Department of Energy
Albuquerque Operations Office
Los Alamos Area Office
Los Alamos, New Mexico 87544

Sta

MAY 1998
RECEIVED

APR 30 1998

CERTIFIED MAIL - RETURN RECEIPT REQUESTED

Mr. Benito Garcia, Chief
Hazardous and Radioactive Materials Bureau
New Mexico Environment Department
2044 Galisteo Street, Building A
P. O. Box 26110
Santa Fe, NM 87505

Dear Mr. Garcia:

Subject: Response to Request for Supplemental Information, Closure Certification Report for the Controlled Air Incinerator at Technical Area 50, EPA I.D. No. NM 089 001 0515

The purpose of this letter is to submit a response to the above-referenced Request for Supplemental Information (RSI) from the New Mexico Environment Department (NMED). The request was sent to Mr. G. Thomas Todd, Area Manager, Los Alamos Area Office , Department of Energy, and Dr. John Browne, Director, Los Alamos National Laboratory (LANL) from Ed Kelley, Water and Waste Management Division Director, NMED, on March 31, 1998.

The response consists of an amended Closure Certification Report (Los Alamos National Laboratory, Controlled Air Incinerator Resource Conservation and Recovery Act Closure Report and Certification, April 22, 1998, Updated Version) in redline/strikeout and clean versions incorporating responses to the comments received in the RSI. The amended copy includes a change schedule table after the cover page that describes the information added to the certification report to address all but the last portion of Item 4 of Attachment A of the letter request. The information includes an added quality assurance statement for sample documentation and analytical activities, added names of personnel for log entries, and additional notes to the sample result tables describing detection limits and analytical methods.

The second part of Item 4 in the RSI references sample destination and transporter identifications. The decontamination samples for the controlled air incinerator closure were analyzed by Paragon Analytics Incorporated, 225 Commerce Drive, Fort Collins, Colorado. The samples were transported from the site to the LANL Environmental Restoration Project, Sample Management Office, by various personnel in the

8861

Environment, Safety and Health Division, Hazardous and Solid Waste Group (ESH-19). The samples were then packaged for shipment by Federal Express Corporation to the analytical laboratory. Information on specific sample shipments is contained in the chain-of-custody portions of the sample data packages maintained by the Sample Management Office and were not included in the logbook entries. These are available for your onsite review.

One redline/strikeout and two clean copies of the updated closure report are included with this submittal. If you have further questions or comments regarding this submittal, please contact me at (505) 665-5042.

Sincerely,

H.L. "Jody" Plum
Office of Environment

LAAME:6JP-060

Enclosure

cc w/o enclosure:
S. Dinwiddie, Ph.D.
Hazardous and Radioactive Materials Bureau
New Mexico Environment Department
2044 Galisteo St., Building A
P. O. Box 26110
Santa Fe, NM 87505

LOS ALAMOS NATIONAL LABORATORY CONTROLLED-AIR INCINERATOR RESOURCE CONSERVATION AND RECOVERY ACT CLOSURE REPORT AND CERTIFICATION

April 22, 1998
Updated Version

Project No. 5044.01.0200

John Kinker
Technical Lead

Suzanne Moore-Mayne
Project Manager

Prepared for:

Los Alamos National Laboratory
P.O. Box 1663
Los Alamos, New Mexico 87545

Prepared under Subcontract No. 938EE0005-8L

Los Alamos National Laboratory Controlled-Air Incinerator
Resource Conservation and Recovery Act Closure Report and Certification

CHANGE SCHEDULE

Item	Description of Change	Date
QA/QC Statement	Added signed QA/QC Statement	4/22/98
Appendix D, Table D-1a	Added Note 5 (description of analytical methods per analyte) Added Detection Limits to table	4/22/98
Appendix D, Table D-1b	Added Note 5 (description of analytical methods per analyte)	4/22/98
Appendix D, Table D-2	Added Notes 4 and 5 (description of analytical methods per analyte) Changed "Reporting Limit" to "Laboratory Detection Limit"	4/22/98
Appendix D, Table D-3	Added Note 2 (description of analytical methods per analyte) Added Detection Limits to table	4/22/98
Appendix D, Table D-4	Added Notes 5 and 6 (description of analytical methods per analyte) Changed "Reporting Limit" to "Laboratory Detection Limit"	4/22/98
Appendix D, Table D-5	Added Notes 5 and 6 (description of analytical methods per analyte) Changed "Reporting Limit" to "Laboratory Detection Limit"	4/22/98
Appendix F	Added "Name and Address of Persons Making Log Entries"	4/22/98

CONTENTS

Section	Page
TABLES	iv
ACRONYMS AND ABBREVIATIONS	v
CLOSURE CERTIFICATION	vi
CERTIFICATION OF ACCURACY	vii
EXECUTIVE SUMMARY	viii
1.0 INTRODUCTION	1
1.1 Unit Description	1
1.2 Waste Handled	2
1.2.1 Incinerator Operation	2
1.2.2 Incinerator Closure	2
1.3 Variances to the Closure Plan	3
1.3.1 Severability of Controlled-Air Incinerator Components	3
1.3.2 Decontamination Verification Sampling Specificity	3
1.3.3 Reuse of Building Exhaust Stack and Associated Piping	4
1.3.4 Recycling of Contaminated Metallic Components	4
2.0 PERFORMANCE STANDARDS	5
2.1 Background Concentration Comparison	6
2.2 Direct Characterization	6
3.0 CLOSURE PROCEDURE	7
3.1 Initial Characterization	7
3.2 Decontamination Procedures	12
4.0 SAMPLING PROCEDURES	13
4.1 Radiation Surveys	13
4.2 Initial Swipe Sampling	13
4.3 Solid Sampling	15
4.4 Liquid Sampling	15
4.5 Quality Control Samples	16
4.6 Sample Handling	16
4.7 Cleaning of Sampling Equipment	16
5.0 WASTE MANAGEMENT AND COMPONENT DISPOSITION	17
5.1 Decontamination Wash Water	17
5.2 Personal Protective Equipment	17

CONTENTS (Concluded)

Section	Page
5.3 CAI Components	17
5.3.1 Noncontact Ancillary Equipment	17
5.3.2 Contact Ancillary Equipment	18
5.3.3 Principal Treatment Components	18
6.0 RECORDS STORAGE	19
7.0 REFERENCES	19

APPENDICES

APPENDIX A: CLOSURE PLAN
APPENDIX B: SAMPLING AND QA/QC PLAN FOR CLOSURE
APPENDIX C: CORRESPONDENCE
APPENDIX D: DATA TABLES
APPENDIX E: MANIFESTS
APPENDIX F: FIELD LOG

TABLES

Table		Page
3-1	Closure Inspection Log Summary of Decontamination Activities	8
3-2	Field QC Samples	14

ACRONYMS AND ABBREVIATIONS

Benchmark	Benchmark Environmental Corporation
CAI	Controlled-Air Incinerator
CFR	Code of Federal Regulations
Closure Plan	Amended Closure Plan Permit Attachment E.4, Dismantlement Revision (July 1, 1996) (NM 0890010515-1)
DOE	U.S. Department of Energy
EPA	U.S. Environmental Protection Agency
HEPA	high-efficiency particulate air
HRMB	Hazardous and Radioactive Materials Bureau
HWMR	Hazardous Waste Management Regulations
LANL	Los Alamos National Laboratory
NMAC	New Mexico Administrative Code
NMED	New Mexico Environment Department
NRC	U.S. Nuclear Regulatory Commission
PCB	polychlorinated biphenyl
PPE	personal protective equipment
QA/QC	quality assurance/quality control
R&D	research and development
RAMROD	Radioactive Materials Research Operations and Demonstration Facility
RCRA	Resource Conservation and Recovery Act
RCT	radiation control technician
RLWTF	Radioactive Liquid Waste Treatment Facility
SEG	Scientific Ecology Group, Inc.
SVOC	semivolatile organic compound
TA	Technical Area
TCLP	Toxicity Characteristic Leaching Procedure
TRU	transuranic
TSCA	Toxic Substances Control Act
VOC	volatile organic compound
WAC	waste acceptance criteria

CERTIFICATION OF ADEQUACY OF ANALYSIS AND CONFORMANCE WITH QUALITY ASSURANCE/QUALITY CONTROL PROCEDURES

This certification is made in accordance with Page 14 of the *Amended Closure Plan* Permit Attachment E.4 Dismantlement Revision (July 1, 1996), NM 0890010515-1, for the Los Alamos National Laboratory Controlled-Air Incinerator (Chemical Waste Incinerator).

I certify that, based upon my direct observation of the closure and review of supporting documentation, that all sampling and decontamination activities were performed in accordance with the requirements set forth in the *Amended Closure Plan*, the *Sampling, Quality Assurance & Quality Control Plan for Hazardous Constituents and PCBs During Closure of the Controlled Air Incinerator* (LANL, 1996) and the EPA SW-846 guidance. Analytical data were reviewed and validated according to SW-846 procedures and guidance. Only minor discrepancies were noted and laboratory acceptance criteria that were not met were adequately rated and discussed in the analytical laboratory's supplied documentation.

Therefore, the data presented as evidence of compliance with the requirements of the *Amended Closure Plan* are adequate for verification of closure.

Signed,

Frank J. Primozic

Frank J. Primozic
Certified Quality Auditor

Date: 4/20/98

CLOSURE CERTIFICATION

This certification is made in accordance with 20 NMAC 4.1 Subpart V, 40 CFR 264.115 and page 10 of the *Amended Closure Plan* Permit Attachment E.4, Dismantlement Revision (July 1, 1996), NM 0890010515-1, for the Los Alamos National Laboratory Controlled-Air Incinerator (Chemical Waste Incinerator).

This certification is based upon analytical data provided by Los Alamos National Laboratory and direct observation of closure activities performed by qualified individuals under the direct supervision of a registered professional engineer. This service has been performed with the care and skill ordinarily exercised by members of the profession practicing under similar conditions at the same time and in the same, or a similar, locality. Benchmark Environmental Corporation makes no other warranty, either expressed or implied.

With the signature and seal below, I certify that closure of the Los Alamos National Laboratory Controlled-Air Incinerator has been performed in accordance with the requirements set forth in the *Amended Closure Plan* and applicable federal and state hazardous waste management regulations, with exceptions and approved changes noted in the attached Closure Report, and that the performance standards for closure have been demonstrated.

Respectfully,
Benchmark Environmental Corporation

JOHN G. KINKER III
NEW MEXICO
13071
REGISTERED PROFESSIONAL ENGINEER

John G. Kinker III, P.E.
New Mexico Registered Professional Engineer No. 13071

Date: 4/20/98

CERTIFICATION OF ACCURACY

This certification is made in accordance with 20 NMAC 4.1 Subpart V, 40 CFR 264.115 and page 10 of the *Amended Closure Plan* Permit Attachment E.4 Dismantlement Revision (July 1, 1996), NM 0890010515-1, for the Los Alamos National Laboratory Controlled-Air Incinerator (Chemical Waste Incinerator).

I certify under penalty of law that, based upon my inquiry of the person or persons who managed the project or those directly responsible for gathering the information, the information submitted in this report is, to the best of my knowledge and belief, true, accurate, and complete, and that closure was performed according to the above-referenced *Amended Closure Plan*.

Document title:

LOS ALAMOS NATIONAL LABORATORY
CONTROLLED-AIR INCINERATOR
RESOURCE CONSERVATION AND RECOVERY ACT
CLOSURE REPORT AND CERTIFICATION

Name: _____ Date: September 4, 1997
Dennis J. Erickson
Environment, Safety, and Health Division
Los Alamos National Laboratory

Name: _____ Date: September 5, 1997
G. Thomas Todd
Area Manager
U.S. Department of Energy -Los Alamos Area Office

EXECUTIVE SUMMARY

This closure report documents the activities undertaken to complete the closure of the Los Alamos National Laboratory (LANL) Controlled-Air Incinerator (CAI) under the provisions of LANL's Resource Conservation and Recovery Act (RCRA) Operating Permit, the New Mexico Hazardous Waste Management Regulations (HWMR-5 and 20 NMAC 4.1), and the approved RCRA Closure Plan. The closure was witnessed by an independent, registered professional engineer or a designated inspector under his direct supervision. This report is limited to a discussion of the activities required for a RCRA closure. A separate closure report describing the action taken to comply with the requirements for a Toxic Substances Control Act (TSCA) closure was submitted to U.S. Environmental Protection Agency Region 6 on February 8, 1997. The CAI polychlorinated biphenyl incinerator approval was terminated on February 27, 1997.

The LANL CAI was installed in 1977, and first operated in 1978. The CAI was originally a research and development unit used to test the viability of incineration as a treatment method for transuranic waste. Between 1978 and 1987, a total of 36 research campaigns had been completed at the CAI, eight of which involved radioactive materials. It was permitted in 1989 to incinerate RCRA-regulated waste and was authorized to incinerate TSCA-regulated waste. No waste was treated after becoming permitted because the unit was shut down to perform upgrades and maintenance.

Although the closure plan followed for this closure is officially referred to as the *Amended Closure Plan* Permit Attachment E.4 Dismantlement Revision (July 1, 1996) (Closure Plan), there were no closure plan modifications or amendments as described in 20 NMAC 4.1 Subpart V, *40 Code of Federal Regulations* §264.112(c) and Closure Plan Section E.4.3.3. The referenced Closure Plan amendments were approved by the New Mexico Environment Department on July 3, 1996. LANL and the U.S. Department of Energy did seek clarification, however, concerning interpretations of the Closure Plan and procedural refinements as closure progressed; these issues are also discussed in this report.

Closure activities proceeded in three distinct phases: initial characterization, dismantlement and decontamination, and disposition of components. The primary performance standard for this closure is the absence of HWMR-5, Part II, Appendix VIII hazardous constituents. Absence of a hazardous constituent is defined in the Closure Plan as 1) analytically nondetectable, or 2) detectable at concentrations below established background levels. Components exhibiting levels of residual contamination above the established background were decontaminated according to the procedures outlined in the Closure Plan. The effectiveness of the decontamination procedure was verified through sampling of rinse water followed by analysis for hazardous constituents.

Many CAI metallic components that were decontaminated according to the procedures in the Closure Plan could not meet the performance standard. These components were recycled as scrap metal at a U.S. Nuclear Regulatory Commission-licensed facility. A few components (exhaust stack, process sump tank, and building sump tank) were retained in the building to be used for the RAMROD facility project. On April 14, 1997, the New Mexico Environmental Department (NMED) approved reuse of the exhaust stack and incorporation into the RAMROD hazardous waste facility permit; inclusion of the sump tanks is pending NMED approval. All other items were either recycled as described above or disposed of as low-level radioactive waste.

This closure was performed and completed in accordance with the provisions of the approved Closure Plan and the requirements put forth in the aforementioned regulations, standards, and compliance documentation.

1.0 INTRODUCTION

This closure report documents the implementation and completion of closure activities at the Los Alamos National Laboratory (LANL) Controlled-Air Incinerator (CAI) pursuant to the procedures outlined in the *Amended Closure Plan* Permit Attachment E.4 Dismantlement Revision (July 1, 1996) (Closure Plan). The Closure Plan is included as Appendix A.

In addition to the Closure Plan, LANL project personnel developed and implemented a *Sampling, Quality Assurance and Quality Control Plan for Hazardous Constituents and PCBs During Closure of the Controlled-Air Incinerator* (QA/QC Plan) (LANL 1996). The QA/QC Plan details sampling and analytical protocols, personnel responsibilities, relevant quality assurance/quality control (QA/QC) measures, and sample handling and documentation procedures. The QA/QC Plan is included as Appendix B.

1.1 Unit Description

The CAI is located in Building 37 at Technical Area (TA)-50 of LANL. The CAI was installed in 1977, and first operated in 1978. The CAI was originally a research and development (R&D) unit used to test the viability of incineration as a treatment method for transuranic (TRU) waste. R&D testing ceased in 1987, so that upgrades to the system, identified during the initial phase of operation, could be performed. The CAI was both permitted to incinerate Resource Conservation Recovery Act (RCRA)-regulated waste and authorized to incinerate Toxic Substances Control Act (TSCA)-regulated waste. A RCRA trial burn was conducted just prior to the cessation of R&D activities.

Between 1978 and 1987, a total of 36 campaigns were completed at the CAI, eight of which involved radioactive materials. These campaigns included equipment checks, treatability studies, efficiency studies, a polychlorinated biphenyl (PCB) trial burn, incineration of PCB-contaminated materials, a hazardous waste trial burn, and incineration of hazardous waste and TRU waste. No waste was treated after the hazardous waste facility permit was obtained in 1989, because the unit was shut down to perform upgrades and maintenance.

This closure report is limited to a discussion of the requirements for a RCRA closure. A closure/ decontamination plan that described the action taken to comply with the requirements for a TSCA closure

was submitted to U.S. Environmental Protection Agency (EPA) Region 6 on February 8, 1997. The CAI PCB incinerator approval was terminated on February 27, 1997, and the closure/decontamination plan was determined to be adequate for the CAI's closure/decontamination.

1.2 Waste Handled

1.2.1 Incinerator Operation

The CAI was used to treat only a small waste volume after the cessation of the R&D program, including PCBs and some organic compounds. LANL concluded in the Closure Plan, through a review of feed summary data, that the CAI was not used to burn any RCRA-listed wastes. Run 23 (March 1987) included waste scintillation fluids that met the definition of "ignitable" (D001) RCRA characteristic waste. The ignitability characteristic was treated through incineration as specified at 20 New Mexico Administrative Code (NMAC) Chapter 4 Part 1 and *40 Code of Federal Regulations* (CFR) Part 268, Appendix VI (Closure Plan, Section E.4.2, "Description of Waste Handled"). Appendix 1 of the Closure Plan provides a detailed list of waste treatment campaigns and the respective wastes treated.

1.2.2 Incinerator Closure

Wastes handled as part of the closure included dismantled CAI components, personal protective equipment (PPE), and decontamination wash water. Uncontaminated CAI components were sent either to a sanitary landfill if they did not have any radioactive contamination, or to salvage for metal recycling. Contaminated CAI components were decontaminated and shipped to a U.S. Nuclear Regulatory Commission (NRC)-licensed metal recycling facility. The incinerator chambers were sealed and disposed of at the LANL TA-54, Material Disposal Area G. Much of the PPE was reusable and laundered by LANL. PPE that was not launderable (e.g., gloves) was disposed of as low-level radioactive waste and buried at TA-54, Area G.

Decontamination wash water was sampled and characterized to verify that it met the waste acceptance criteria and then was discharged to the TA-50 Radioactive Liquid Waste Treatment Facility (RTWTF). This facility treats a variety of wastewaters containing radionuclides and discharges to Mortandad Canyon under a National Pollutant Discharge Elimination System permit.

1.3 Variances to the Closure Plan

There were no closure plan modifications or amendments as described in 20 NMAC 4.1 Subpart V, 40 CFR §264.112(c) and Closure Plan Section E.4.3.3, "Amendment of the Closure Plan." However, LANL and the U.S. Department of Energy (DOE) requested several clarifications concerning interpretations of the Closure Plan and procedural refinements; the following sections discuss these issues individually. Each procedural change or clarification was concurred upon by the New Mexico Environment Department (NMED) and documented in written correspondence, which is cited and included in Appendix C. Other variances to prescribed procedures are discussed individually, where appropriate, throughout this report.

1.3.1 Severability of Controlled-Air Incinerator Components

After initial characterization of the CAI's main components, LANL noted that chemical contamination of the components was unevenly distributed. Volatile organic compounds (VOCs), semivolatile organic compounds (SVOCs), and metals were distributed differently throughout the CAI, with certain types of contaminants (i.e., VOCs) completely absent from a particular component. This Closure Plan does not specify whether the CAI is a single, unified entity, or whether it can be separated into its constituent components for the purpose of decontamination and sampling.

LANL and the DOE sought to clarify this issue with the NMED Hazardous and Radioactive Materials Bureau (HRMB) in an August 21, 1996 meeting. A letter from the DOE to the NMED dated September 16, 1996, documents that meeting where it was agreed that, "...the intent of the closure plan was to look at each component and withdraw it from further activity if sample analysis indicated that it was not contaminated with constituents." This letter is included in Appendix C.

1.3.2 Decontamination Verification Sampling Specificity

In the event that some contamination remained, LANL and the DOE wanted to clarify the protocol for resampling components that had already undergone decontamination. The letter cited in Section 1.3.1, above, from the DOE to the NMED states that, "NMED agreed that follow-up analysis for a given component (if contaminated with RCRA heavy metals only) would consist of sampling for only heavy metals. For a component identified to have organic constituents present, it was agreed that a full suite of analyses would be necessary to confirm that they were clean." This closure strategy represents a refinement of the closure activities described in Closure Plan Section E.4.5, "Verification of Decontamination."

1.3.3 Reuse of Building Exhaust Stack and Associated Piping

TA-50, Building 37, which housed the CAI, will continue to be used for other projects, namely the Radioactive Materials Research Operations and Demonstration Facility (RAMROD). The RAMROD will include a mixed waste storage area. RAMROD project staff have requested that the exhaust stack and some of its associated equipment be retained as part of the facility structure.

Under NMED regulations, RAMROD operations require a separate hazardous waste facility permit. In a letter to the HRMB (dated March 27, 1997) the DOE requested the Bureau's position on leaving the stack, exhaust ducts, and blowers in place without decontamination. The HRMB response (dated April 14, 1997) stated, "HRMB agrees with the approach that the stack, high-efficiency particulate air (HEPA) filtration bank, plenum, and associated ducts and fans used as part of the CAI could be used in association with the RAMROD operations at TA-50, Building 37. The RAMROD permit application must be amended to include this equipment and address closure as part of the RAMROD activities." These letters are included in Appendix C. [NOTE: HEPA filters and plenums were not retained in the facility, but were decontaminated and disposed of in accordance with the Closure Plan.]

In addition to the exhaust stack, the process sump and building sump tanks were retained for use in association with RAMROD facility operations. These items were not mentioned in the original LANL request and are, therefore, retained pending NMED approval.

During initial characterization, three exhaust stack samples were taken. An arsenic level of 0.34 part per billion (ppb) was detected in one sample collected at the top portion of the exhaust stack (detection limit for arsenic is 0.25 ppb). The other two sample analyses did not detect arsenic. All other analytical results for the stack were within the performance standard for hazardous constituent contamination. Both sump tanks were decontaminated according to the closure plan. Rinsate from the tanks exhibited contaminant levels slightly above the performance standard. Analytical results are provided as Appendix D.

1.3.4 Recycling of Contaminated Metallic Components

Many CAI metallic components could not be cleaned to the performance standard despite adherence to Closure Plan procedures. The components were, however, only surface-contaminated with low concentrations of RCRA metals. Because of this, recycling pursuant to 20 NMAC 4.1 Subpart II, 40 CFR §261.6(a)(1); and 20 NMAC 4.1 Subpart II, 40 CFR §261.6(a)(3)(iii), was investigated as an alternative

to disposing of the components. When these components are recycled, the metals contaminating their surfaces will be incorporated into the final product. When the metal contaminants are incorporated into the end product, they are no longer removable or available to the environment. Therefore, recycling of these components is an environmentally responsible option that reduced the volume of waste requiring disposal, and generated useful products without compromising closure goals.

However, because many CAI components were contaminated with radionuclides, use of recycled metal stock is restricted to DOE and NRC-licensed facilities. Decontaminated CAI components that were amenable to recycling were shipped to the Scientific Ecology Group, Inc. (SEG) metal recycling facility in Oak Ridge, Tennessee, an NRC-licensed facility for recycling and reuse within the DOE Laboratory system.

2.0 PERFORMANCE STANDARDS

The primary performance standard for determination of CAI closure is the absence of Hazardous Waste Management Regulations (HWMR)-5, Part II, Appendix VIII hazardous constituents. The Closure Plan defines "absence of a hazardous constituent" as a constituent that is analytically nondetectable or detectable at concentrations below an established background level. Components exhibiting levels of residual contamination above the established background were decontaminated according to the procedures outlined in Closure Plan Section E.4.3.2, "Final Closure." The effectiveness of the decontamination procedure was verified through sampling of rinse water followed by analysis for hazardous constituents.

The performance standard basis used during this closure is described in Closure Plan Sections E.4.4, "Verification of No Contamination," and E.4.5, "Verification of Decontamination." Certain items and materials were amenable to direct characterization through Toxic Characteristic Leaching Procedure (TCLP) analysis (Method 1311, EPA Publication SW-846). Items that were decontaminated repeatedly but still did not achieve the prescribed performance standard were recycled as scrap metal (as described in Sections 1.3.4, 3.2, and 5.0 of this closure report).

Sections 2.1 and 2.2 describe the two performance standards applied to this closure; both were prescribed by the Closure Plan.

2.1 Background Concentration Comparison

Final closure of the CAI as described in Closure Plan Section E.4.3.2, "Final Closure," consists of sampling and analysis to verify the absence of contamination. As the Closure Plan states, "Verification will consist of sampling the principal CAI components throughout the system that have been in contact with material feeds, residues, or secondary wastes. If RCRA contamination is found, components amenable to decontamination will be cleaned...If no constituents are detected statistically above background, these components will be deemed decontaminated and can then be reused or disposed of as waste."

Furthermore, Closure Plan Section E.4.4, "Verification of No Contamination," states, "Analytical results from field blanks and control samples of the solid waste feed glove box, [the low probability sample location], will provide background data for verification of the absence of contamination. CAI components will be considered to be contaminated if verification samples show a statistically significant increase in the listed constituents over the field blank and control samples."

This standard was applied to the initial characterization of CAI components to determine which items, if any, required decontamination. The standard was further applied in the verification of decontamination effectiveness. However, due to the persistence of certain RCRA-metal concentrations above background in the decontamination rinsate samples, a number of components were repeatedly decontaminated. Even after repetition of decontamination efforts, residual contamination levels could not be reduced any further. Therefore, LANL and the DOE designated the items as scrap metal and shipped them to a licensed radioactive materials recycling facility. Sections 1.3.3, 1.3.4, 3.2 and 5.0 of this closure report describe the disposition of these items.

2.2 Direct Characterization

CAI components that were not amenable to decontamination were required to undergo waste analysis and characterization as described in Closure Plan Section E.4.3.2, "Final Closure." Direct waste characterization of solids using the TCLP was performed on samples taken from the incinerator refractory brick and HEPA filters. The refractory brick was analyzed for all toxicity characteristic compounds and was found to be nonhazardous. The HEPA filters were analyzed for metals only, based on 1) the fact that no VOCs or SVOCs were detected in the refractory brick, and 2) the knowledge that they were replaced after the last

incineration campaign and were, therefore, never used while the CAI was in operation. In this way, a direct characterization of the materials as either hazardous waste or nonhazardous solid waste was made.

Constituent concentrations in the decontamination solutions and rinsates were compared to the TCLP standard at 20 NMAC 4.1 Subpart II, 40 CFR §261.24, "Table 1.-Maximum Concentration of Contaminants for the Toxicity Characteristic," to determine that they were or were not hazardous via the toxicity characteristic prior to disposal in the TA-50 RLWTF.

3.0 CLOSURE PROCEDURE

Closure of the CAI proceeded according to the Closure Plan, with the clarifications noted in Section 1.3 of this closure report. Basic closure conduct proceeded in three distinct phases: initial characterization, dismantlement and decontamination, and disposition of components. Benchmark Environmental Corporation (Benchmark) representatives were present as required by Closure Plan Section E.4.7, "Closure Certification," during both the initial characterization and decontamination activities, and performed independent oversight of closure activities pursuant to Closure Plan Section E.4.10, "Quality Assurance/Quality Control." LANL representatives provided Benchmark with an accounting of residue and component disposition (included here as part of Table 3-1). In addition, Appendix E includes copies of manifests and processing instructions for the components that were sent to SEG, as well as internal Laboratory documentation for the components that were sent to TA-54, Area G.

3.1 Initial Characterization

Initial characterization of the CAI was implemented according to Closure Plan Sections E.4.3.2, "Final Closure," and E.4.4, "Verification of No Contamination." The certifying engineer directly supervised sampling and selected sample locations. Sampling complied with the procedures described in Closure Plan Sections E.4.8.4, "Refractory Sampling," E.4.8.5, "Swipe Sampling," and E.4.8.6, "Liquid Sampling." The refractory sampling procedure varied slightly from that described because a larger physical sample was required. Refer to Section 4.3 of this closure report for a complete description of this procedure.

Table 3-1. Closure Inspection Log Summary of Decontamination Activities

Component (Sample Location)	Sampling/Decontamination Description	Date/ Log Page	LANL Sample ID # and Datum Reported	Paragon ID #	Performance Standard Met (Y/N)	Disposition of Component
Non-Contact Ancillary Equipment	Includes instrumentation, electrical conduit, etc.	NA	NA	NA	NA	Nonhazardous items went to Ace Metals; low-level radioactive items went to TA-54 Material Disposal Area G (LANL Waste Profile Form attached)
Contact Ancillary Equipment						
Pipes from jet system for Quench (primary loop water system)	5 pipes steam cleaned, 1 composite sample of all 5 taken	11/18/96, pg. 54	**CAI-QT-20**, metals	96-11-176-1	N	SEG
Secondary Cooling System (Heat Exchanger)	Steam cleaned and 2 samples taken: one from process liquid line, and 1 from loop line	1/7/97, pg. 67	**CAI-SC-1** (process flow), metals	97-01-022-5	N	SEG
			CAI-SC-2 (loop line), metals	97-01-022-6	N	SEG
Hydrocyclone	Steam cleaned	1/7/97, pg. 67	**CAI-HC-1**, metals	97-01-022-4	N	SEG
Scrubber Tanks	Each tank had 2 ports. Steamed both ports of each tank for approximately 15 min. Rinsed both tanks prior to sampling. Transferred rinsate from tanks via pump to 55-gal. drum	10/17/96, pg. 48	**CAI-ST-10**, metals	96-10-139-01	N	Remaining in Building
			CAI-ST-11, metals	96-10-139-02	N	Remaining in Building
Scrubber Tank (Southern), *Second Decon*	Cleaned 1 tank a second time for approximately 1 hour due to high levels of nickel	10/25/96, pg. 50	**CAI-ST-12**, metals	96-10-187-01	N	Remaining in Building
Scrub Solution Recycle Pumps (two) from Sump Tank and Blowdown Tank	Steam cleaned both pumps. Combined rinsate from both pumps for single sample	1/7/97, pg. 67	**CAI-PM-1**, metals	97-01-022-3	N	SEG
Scrub Solution Recycle System Piping	Divided 18 pipe sections into 2 groups of 9 each. Quickly steam cleaned each pipe section. Took 2 rinsate samples of each group of 9 pipes	1/7/97, pg. 67-68	**CAI-PI-1**, metals	97-01-022-1	N	SEG
			CAI-PI-2, metals	97-01-022-2	N	SEG
Principal Treatment Components						
Cross-over ducts from absorber tower to HEPAs (3 parts)	Steamed all 3 pieces together and combined. rinsate Applied steam at ends opposite duct elbows	9/27/96, pg. 27	**CAI-FG-1**, metals	96-09-190-02	N	SEG
			CAI-DE-1, metals	96-09-190-01	N	SEG
			CAI-H-1, metals	96-09-190-03	N	SEG

Table 3-1. Closure Inspection Log Summary of Decontamination Activities (Continued)

Component (Sample Location)	Sampling/Decontamination Description	Date/ Log Page	LANL Sample ID # and Datum Reported	Paragon ID #	Performance Standard Met (Y/N)	Disposition of Component
Venturi Scrubber	Injected steam for 10 min at one end through port and effluent exited through a second port	9/27/96, pg. 28	**CAI-VNT-1**, metals	96-09-190-04	N	SEG
Refractory	Pulverized refractory in place with hammer	9/27/96, pg. 30	**CAI-QT-10**, TCLP analysis	96-09-192	Y	TA-54, Material Disposal Area G (LANL Waste Profile Form attached)
Reheater	Injected steam through both ends of unit, alternating between sides several times	10/3/96, pg. 42	**CAI-RH-1**, metals	96-10-055-02	N	SEG
RAM Glove Box	Injected steam through 4 openings in glove box housing until it ran clear. Captured effluent in drip pans	9/25/96, pg. 25	**CAI-SF-10**, VOCs, metals	96-09-176-01 (metals) 96-09-175-01 (VOCs)	N	SEG
Solid Feed Glove Box (RAM elevator)	Injected steam through one end; drained rinsate into pans for sample collection	9/23/96, pg. 22-23	**CAI-SF-8**, VOCs, SVOCs, metals	96-09-158-03 (metals) 96-09-157-04 (SVOCs) 96-09-157-04DL2 (VOCs)	N	SEG
Solid Feed Glove Box Elevator, *Second Decon*	Injected steam into 8 locations	10/4/96, pg. 45	**CAI-SF-11**, metals	96-10-055-03	N	SEG
Quench Tower	Injected steam into 3 locations (original liquid injection ports) for approximately 20 min. Rinsed for approximately 10 min and collected rinsate	9/18/96, pg. 19-20	**CAI-QT-5**, metals	96-09-117-01	N	SEG
Quench Column	Injected steam into each of 2 ports for approximately 5 min	11/2/96,	**CAI-QT-15**, metals	96-11-084-01	N	SEG
Absorber Tower	Injected steam through side port and continued for 5 min	9/23/96, pg. 24	**CAI-AT-5**, metals	96-09-158-02	N	SEG
Absorber Tower, *Second Decon*	Steam injected through 2 ports of the column	10/7/96, pg. 46	**CAI-AT-10**, metals	96-10-055-01	N	SEG
HEPA Bank Entry Plenum	Injected steam at 3 locations. Closed valves to HEPA plenums during steam injection	10/1/96, pg. 36	**CAI-HP-10** , metals	96-10-028	N	SEG
HEPA Filter Housings and Cross-Over Piping	Wiped internal surfaces with Alconox solution and wet cloths followed by clean cloths and clean water. Took 1 combined sample from rinse water from each filter housing	10/2/96, pg. 37	**CAI-HP-11**, metals	96-10-040-01	N	SEG
HEPA Bank Exit Plenum	Steam cleaned through each horizontal duct opening and top vertical opening	10/3/96, pg. 39	**CAI-HP-14**, metals	96-10-040-03	N	SEG
HEPA Filters (2)	Extracted cores from both the upstream and downstream filters included equal parts pre-filter, filter body, and exit screen	12/20/96, pg. 63	**CAI-HF-1**, TCLP analysis **CAI-HF-2** , TCLP analysis	96-12-155-1 96-12-155-2	Y Y	TA-54, Material Disposal Area G (LANL Waste Profile Form attached) TA-54, Material Disposal Area G

Table 3-1. Closure Inspection Log Summary of Decontamination Activities (Concluded)

Component (Sample Location)	Sampling/Decontamination Description	Date/ Log Page	LANL Sample ID # and Datum Reported	Paragon ID #	Performance Standard Met (Y/N)	Disposition of Component
Carbon Absorber	Decon not observed; sampling observed	09/12/96, pg. 18	CAI-AC-4 , VOCs CAI-AC-5, metals	96-09-109-01 96-09-110-01	N N	SEG
Exhaust Stack	Conducted initial characterization with swipes	07/02/96, pg. 7	CAI-EX-1, CAI-EX-2, CAI-EX-3, metals, VOCs		N	Remaining in Building. Used for next permitted activity (see Section 1.3.3)
Ash Hopper (Dump)	Steamed unit for approximately 10 min through one port. Took sample from drain port	11/15/96, pg. 52	CAI-AR-11, metals CAI-AR-12 , Duplicate of AR-11	96-11-113-01 96-11-113-02	N N	SEG
Ash Hopper Valves	Pulled stainless steel sheets from housing, rinsed with hot water and steam cleaned. Steam cleaned valve housing and valve. Took rinsate sample only from the single valve to represent worst case	9/30/96, pg. 35	CAI-AR-10, metals	96-10-013	N	SEG
Incinerator Chambers and Hot Cross-Over Duct	Not Deconned. Characterized refractory lining directly using TCLP and analysis. Determined to be nonhazardous	Not in log	CAI-QT-10, CAI-FR-1A, TCLP		Y	TA-54 Material Disposal Area G (LANL Waste Profile Form attached)
Liquid Waste Feed Tank (a)	Not Deconned. Passed initial swipe sampling and characterization	Not in log	CAI-LF-2, swipes CAI-LF-5, duplicate of LF-2		Y	Ace Metals
Liquid Waste Feed Tank (b)	Not Deconned. Positive for PCBs. Disposed of as PCB-contaminated item	Not in log	CAI-LF-1, swipes CAI-LF-3, swipes		Y	PCB - contaminated disposed of via TSCA closure at SD Myers, Inc. (Certificate of Destruction/Recycle attached)

All samples were analyzed by Paragaon Analytics, Inc.

Prior to chemical characterization of the CAI, a thorough radiological survey was conducted and radiological control zones and PPE requirements were established per the requirements outlined in Closure Plan Section E.4.3.2, "Final Closure." Initially, swipe samples were collected to establish background concentrations from the solid waste feed glove box, which is designated by the Closure Plan as the background location. Section 4.0 of this closure report contains a detailed description of sampling activities. Swipe samples were then collected from the major components (identified in Closure Plan Section E.4.4, "Verification of No Contamination") that had the greatest likelihood of contamination. These included the following:

- Solid Waste feed
  - Solid waste feed transfer glove box
  - Solid waste feed elevator glove box
- Liquid Waste feed
  - Liquid waste feed tanks
- Quenching tower
- Absorption tower
- HEPA filter
  - HEPA filter plenum
- Activated carbon adsorber
- Exhaust stack
- Ash removal system

Although the combustion chambers are listed in Closure Plan Section E.4.4, "Verification of No Contamination," the chambers were completely lined with refractory brick and were, therefore, not swipe sampled. Liquid samples were collected from the scrub solution tank system; solid samples were collected from the refractory brick and HEPA filters. Solid samples were subjected to the TCLP analysis. Refer to Sections 2.2 and 4.3 of this closure report for a discussion of TCLP sample collection and analysis.

All major CAI components except the incinerator chambers, hot cross-over duct, and liquid waste feed tanks exhibited some degree of residual contamination above established background levels. Therefore,

dismantlement of the CAI was immediately followed by implementation of the decontamination procedures described in Closure Plan Sections E.4.3.2, "Final Closure," and E.4.5, "Verification of Decontamination."

The liquid feed tanks exhibited no metals contamination. One feed tank showed PCB concentrations above the action level established at 40 CFR 761, Subpart G, "PCB Spill Cleanup Policy." This component was managed as TSCA waste under the procedures outlined in a letter dated February 8, 1996, between the Los Alamos Area Office (LAAO) of the DOE and EPA, Region 6. The letter titled, "Los Alamos National Laboratory Controlled-Air Incinerator, Technical Area (TA)-50, Building 37, Cancellation of Authorization to Incinerate Polychlorinated Biphenyls (PCBs)," was submitted for concurrence by the EPA prior to the initiation of closure activities and served as the closure plan and specifications for TSCA-related issues.

Compared to the background samples taken from the feed glove box, samples taken from the feed tank showed positive results for two VOCs, with concentrations very close to the instrument detection limit. Because of the detected field blank contamination, presence of multiple VOCs in the background samples, and concentrations near the detection limit, the LANL project chemist determined that the results did not substantiate the presence of contamination above background levels. These analytical results are shown in Table D-4 (Appendix D).

3.2 Decontamination Procedures

The decontamination procedures and verification sampling conformed to the specifications in Closure Plan Sections E.4.3.2, "Final Closure," and E.4.5, "Verification of Decontamination." Table 3-1 of this closure report provides detailed decontamination and verification sampling for each component that required it and lists the following items (noted in Closure Plan Section E.4.11, "Final Closure Report"):

- Sample identification
- Sample location
- Datum reported
- Datum detection limit
- Measurement of analytical precision
- Analytical procedure identification
- Identification of the analytical laboratory

Table 3-1 provided additional information to assist in tracking and evaluating the entire decontamination process, including a notation of whether the performance standard was met, item disposition, and the page of the field log pertaining to a given component. Table 3-1 is organized by component type (i.e., noncontact ancillary equipment, contact ancillary equipment, and principal treatment components). Table 3-2 includes information about the QC samples taken.

4.0 SAMPLING PROCEDURES

All sampling procedures conformed to those prescribed in Closure Plan Section E.4.8, "Sampling and Analytical Procedures." A Benchmark representative observed all sampling activities and documented them separately in the Benchmark field logbook. The following sections detail each specific component of the sampling and analysis program.

4.1 Radiation Surveys

The CAI was surveyed for radioactivity prior to initiation of chemical sampling. The TA-50, Building 37 radiation control technician (RCT) performed the surveys using both smears and direct-reading instrumentation. The RCT established radiation control zones and appropriate PPE levels. An industrial hygienist was assigned to the project based on the results of the survey. Direct-reading instrumentation was again used during chemical swipe sampling to ensure protection of the sampling team and to confirm that no releases were caused by sampling activity.

4.2 Initial Swipe Sampling

Swipe samples were obtained according to the procedures described in Closure Plan Section E.4.8.5, "Swipe Sampling." Step 1 requires the use of a standard, 100 cm^2 template to define the sampling area. Templates were used to obtain the background samples, but were not used for subsequent sampling activities due to the negative draft caused by the CAI exhaust system. It was impossible to use the templates because the CAI exhaust system had to remain operational to maintain a negative pressure gradient toward the inside of the CAI. The induced draft would not permit the templates to be secured during sampling. Therefore, the person performing sampling used his best judgment to obtain swipe

Table 3-2. Field QC Samples

Component	Date/Log Page	LANL Field Sample ID Number	Paragon Analytical Sample ID Number	Notes
Quench Tower	9/18/96, pg. 19-20	**CAI-QT-4**	96-09-115-01DL5 (VOCs) 96-09-115-01 (SVOCs) 96-09-116-01 (metals)	Baseline Samples Detected carbon disulfide and dimethyl phthalate
		CAI-QT-6	96-09-115-02R (VOCs)	Trip Blank Detected acetone (estimated value below reporting limit)
		CAI-QT-7	96-09-115-3R (VOCs)	Field Blank
Solid Feed Glove Box (RAM elevator)	9/23/96, pg. 22-23	**CAI-AT-6**	96-09-157-02 (VOCs)	Trip Blank
		CAI-AT-7	96-09-157-03 (VOCs)	Field Blank Detected methylene chloride (estimated value below reporting limit)
		CAI-SF-9	96-09-158-04 (metals)	Duplicate of CAI-SF-8
Absorber Column	9/23/96, pg. 24	**CAI-AT-4**	96-09-157-01 (VOCs) 96-09-157-02 (SVOCs) 96-09-158-01 (metals)	Baseline Samples Detected p-isopropyltoluene
RAM Glove Box	9/25/96, pg. 25	**CAI-SF-12**	96-09-175-02 (VOCs)	Field blank Original field blank CAI-SF-11 spilled. Trip blank used as field blank
Ash Dump	11/15/96, pg. 52	**CAI-AR-12**	96-11-113-02 (metals)	Duplicate of AR-11

NOTES:

The matrix for all the QC samples shown in Table 3-2 was water.

Original swipe sample results are listed in Appendix D, Tables D-4 and D-5. Original swipes were used only to determine whether decontamination of CAI components was required.

An exception was the liquid waste feed tanks; one of which was not contaminated, the other was contaminated with PCBs only and was disposed of as a PCB-contaminated solid waste (see Sections 3.1 and 5.3.3 of this closure report for discussion).

samples from an approximate area of 100 cm^2. The same individual performed all swipe samples to maintain as much consistency between samples as possible. All other procedural steps were performed as prescribed in the Closure Plan.

4.3 Solid Sampling

Samples were obtained from the refractory brick lining of the two combustion chambers and the cross-over duct. It was not possible to follow the sampling procedures described in Closure Plan Section E.4.8.4 because the refractory lining was glazed. It would have been impossible to extract portions of the lining with a "small brush" as specified. Therefore, a hammer was used to pulverize the refractory so a sample could be extracted. This refractory sample was then subjected to TCLP analysis and did not exhibit the toxicity characteristic.

Samples for TCLP analysis were also collected from the remaining HEPA filter cartridge. These were taken by coring into the filter media. The parts of the wooden frame and metal supports were also cut off and combined with the filter media.

4.4 Liquid Sampling

Liquid samples of unused wash water, decontamination rinsate, and residues left in the scrub solution recycle tanks were collected and analyzed. All liquid sampling was performed in accordance with the procedures prescribed in Closure Plan Section E.4.8.6, "Liquid Sampling." The methods used for decontamination made it possible for samples to be obtained directly from the equipment as it drained. Therefore, Step 3 of the Closure Plan procedure was altered to eliminate the use of a vacuum pump for wash water/rinsate collection from some equipment. Also, Steps 5 through 8 are specific to the collection of stratified liquid samples using a COLIWASA sampler stratified liquid samples were taken because there was no stratified liquid. The wash water and rinsate samples were collected within several minutes of their respective release from the equipment, so that stratification was avoided.

4.5 Quality Control Samples

The requisite QC samples are listed in Table E.4-8 of the Closure Plan. Trip blanks, field blanks, and field duplicates were prepared and/or collected in accordance with the provisions of the Closure Plan, with the following exception. Field blanks were not prepared for decontamination wash water when analysis was limited to metals. This was consistent with the NMED's decision that wash water analyses could be limited to analytes originally detected on the swipe samples. Table 3-2 lists the field QC samples that were collected and the analyses performed.

Analysis of QC samples were performed in compliance with Closure Plan Section E.4.8.2, "Field and Laboratory Quality Assurance/Quality Control." Benchmark conducted a Level III validation of more than one-half of the analytical laboratory's data packages, including raw data, data reports, and case narratives for this closure project. Only minor discrepancies were noted and laboratory acceptance criteria that were not met were adequately rated and discussed in the analytical laboratory's supplied documentation.

4.6 Sample Handling

All samples were handled in accordance with Closure Plan Section E.4.9, "Sample Handling and Documentation," "Test Methods for Evaluating Solid Waste, Physical/Chemical Methods" (EPA SW-846), and the QA/QC Plan (LANL 1996). All samples were collected in appropriate containers and properly preserved. All samples followed proper chain-of-custody procedures and documentation requirements. All samples were sent to a commercial laboratory to be analyzed; no holding times were exceeded.

4.7 Cleaning of Sampling Equipment

Only disposable sampling equipment was used to take decontamination samples of CAI components. Therefore, the equipment cleaning regime described in Closure Plan Section E.4.8.3, "Cleaning of Sampling Equipment," was not performed.

5.0 WASTE MANAGEMENT AND COMPONENT DISPOSITION

Residues from the sampling and decontamination of CAI components were handled according to LANL standard waste management practices. Information on each item or waste stream that required treatment or disposal was provided by LANL and is discussed in the following sections.

5.1 Decontamination Wash Water

Decontamination wash water was sampled according to the procedures in Closure Plan Sections E.4.3.2, "Final Closure," and E.4.5, "Verification of Decontamination," as well as for compliance with the LANL Waste Acceptance Criteria (WAC). All decontamination wash water met the RLWTF WAC and was discharged to the RLWTF for treatment and disposal.

5.2 Personal Protective Equipment

LANL determined that PPE was required for radiological controls only. Use of reusable PPE was given preference over disposable PPE; however, neoprene gloves and Tyvek™ coveralls were also used. LANL laundered all reusable items for reuse. All disposable items were accepted as low-level radioactive waste and disposed of in the Low-Level Radioactive Waste Landfill at TA-54, Material Disposal Area G.

5.3 CAI Components

CAI components can be subdivided into three groups: noncontact ancillary equipment, contact ancillary equipment, and principal treatment components. Disposition of each category is described in the following sections.

5.3.1 Noncontact Ancillary Equipment

CAI components that were part of non-contact ancillary systems and equipment (e.g., instrumentation, electrical conduit, support structures, etc.) were screened for radioactivity and disposed of as nonhazardous solid wastes or low-level radioactive wastes, as appropriate. Metal components that met LANL's free release criteria and could be recycled were collected by Ace Metals, Inc.

5.3.2 Contact Ancillary Equipment

Contact ancillary equipment includes all components that were part of the CAI process train, but were not part of the initial swipe sampling. These components include, but are not limited to, pumps, piping, filters, flow metering loops, heat exchangers, and process ducts. These components were not characterized during the first phase of closure, but were in contact with waste or treatment residues. All such components were decontaminated according to the procedures in the Closure Plan. Decontamination wash water was sampled for each item or group of items after decontamination was performed. All radioactively-contaminated metal components that could be recycled were shipped to the SEG metal recycling facility in Oak Ridge, Tennessee.

5.3.3 Principal Treatment Components

Principal treatment components of the CAI (those that comprise the major process unit operations e.g., quench tower, HEPA plenum, etc.) were initially characterized during the first phase of closure using swipe sampling. These components are listed in Section 3.1 of this closure report and Closure Plan Section E.4.4, "Verification of No Contamination." All principal components found to be above the background contamination level were decontaminated (as described in Section 3.0 of this closure report) and disposed of either as low-level radioactive waste or recycled as scrap metal at the SEG metal recycling facility in Oak Ridge, Tennessee.

Exceptions are the incinerator chambers and hot duct that were lined with refractory, and the liquid waste feed tanks. The refractory was sampled and analyzed using the TCLP. Results indicated that the refractory lining of the incinerator chambers and hot duct was not a RCRA hazardous material. Thus, these components were disposed of at the LANL TA-54, Material Disposal Area G.

The liquid feed tanks exhibited no metals contamination. One feed tank showed PCB concentrations above the action level established at 40 CFR 761, Subpart G, "PCB Spill Cleanup Policy." Compared to the background samples taken from the feed glove box, samples taken from the feed tank showed positive results for two VOCs, with concentrations very close to the instrument detection limit. However, the field blank was found to be contaminated as well. Because of the field blank contamination, presence of multiple VOCs in the background samples and concentrations near the detection limit, the LANL project chemist determined that the results did not substantiate the presence of contamination above background levels. Table D-4 (Appendix D) shows these analytical results.

Therefore, due to the lack of RCRA constituents and the detection of PCB contamination, the effected feed tank was shipped to a licensed PCB disposal facility where it was destroyed. Disposition of this unit is fully documented in the *Los Alamos National Laboratory Controlled-Air Incinerator Toxic Substances Control Act Closure Report* (Benchmark 1996). The other feed tank was salvaged for metal recycling.

6.0 RECORDS STORAGE

All records generated as part of this closure are stored at LANL and are the responsibility of the Environment, Safety, and Health Division, Hazardous and Solid Waste Group (ESH-19). These records include the following:

- Analytical data reports
- Chain-of-custody forms
- Sample collection log forms
- Shipping manifests
- Waste profile forms
- Certificates of destruction/recycle
- Inspection field log
- Official correspondence
- Copies of related reports and documentation
- Photographs taken during sampling and decontamination

7.0 REFERENCES

40 CFR Part 261. 1994. "Identification and Listing of Hazardous Waste." *Code of Federal Regulations*, Washington, D.C., Office of the Federal Register National Archives and Records Administration.

40 CFR Part 264. 1994. "Standards for Owners and Operators of Hazardous Waste Treatment, Storage, and Disposal Facilities." *Code of Federal Regulations*, Washington, D.C., Office of the Federal Register National Archives and Records Administration.

40 CFR Part 268. 1994. "Land Disposal Restrictions." *Code of Federal Regulations*, Washington, D.C., Office of the Federal Register National Archives and Records Administration.

40 CFR Part 761. 1994. "Polychlorinated Biphenyls (PCBs) Manufacturing, Processing, Distribution in Commerce, and Use Prohibitions." *Code of Federal Regulations*, Washington, D.C., Office of the Federal Register National Archives and Records Administration.

Benchmark. 1996, *Los Alamos National Laboratory Controlled-Air Incinerator Toxic Substances Control Act Closure Report.* Albuquerque, New Mexico, Benchmark Environmental Corporation.

EPA. 1995. *Test Methods for Evaluating Solid Waste, Physical/Chemical Methods*. SW-846, Third Edition, Final Update I and Final Update II, Washington, D.C., Office of Solid Waste and Emergency Response, U.S. Environmental Protection Agency.

Hazardous Waste Facility Permit. 1989. Permit No. NM 0890010515-1 issued to Los Alamos National Laboratory, Santa Fe, New Mexico, New Mexico Environment Department.

Hazardous Waste Management Regulations, EIB/HWMR-5. Amended July 9, 1989. Santa Fe, New Mexico, New Mexico Environment Improvement Board.

LANL. 1996. *Sampling, Quality Assurance and Quality Control Plan for Hazardous Constituents and PCBs During Closure of the Controlled Air Incinerator.* Los Alamos, New Mexico, Los Alamos National Laboratory.

NMED. July 1, 1996. *Amended Closure Plan.* Permit Attachment E.4. Dismantlement Revision NM0890010515-1, Santa Fe, New Mexico, New Mexico Environment Department - Hazardous and Radioative Materials Bureau.

New Mexico Hazardous Waste Act, 20 NMAC Chapter 4 Part 1. Amended September 15, 1994. Santa Fe, New Mexico, New Mexico Environmental Improvement Board.

September 16, 1996. Letter from H. L. "Jody" Plum, DOE Office of Environment and Projects to Benito Garcis, Bureau Chief, NMED Hazardous and Radioactive Materials Bureau.

March 27, 1997. Letter from H. L. "Jody" Plum, DOE Office of Environment and Projects to Robert S. (Stu) Dinwiddie, Program Manager, NMED Permitting Section HRMB.

April 14, 1997. Letter from Robert S. (Stu) Dinwiddie, NMED Permitting Section HRMB to H. L. "Jody" Plum, DOE Office of Environment and Projects.

Appendix A

Closure Plan

United States Government

memorandum

Department of Energy
Albuquerque Operations Office
Los Alamos Area Office
Los Alamos, New Mexico 87544

DATE: JUL 0 3 1996

REPLY TO ATTN OF: LAAMEP:7HJP-038

SUBJECT: Closure Plan Approval - TA-50, Building 37, Controlled Air Incinerator

TO: James L. White, Group Leader, ESH-19, LANL, MS-K490

Attached is NMED's approval of the Closure Plan for the Controlled Air Incinerator. Please notify the appropriate operations personnel of this action. I also request that you review the requirements of the Closure Plan with the personnel involved in the actual demolition activities to assure its implementation.

Should you have any questions, please contact me at 665-5042.

H. L. "Jody" Plum
Office of Environment and Projects

Attachment

cc w/attachment:
T. Todd, Area Manager, LAAO
H. Le-Doux, Deputy Area Manager, LAAO
H. Haynes, Office of Counsel, LAAO
J. Vozella, AAMEP, LAAO
J. Ellvinger, ESH-19, LANL, MS-K490
K. Hargis, EM/WM, LANL, MS-J552

State of New Mexico
ENVIRONMENT DEPARTMENT
Hazardous & Radioactive Materials Bureau
2044 Galisteo
P.O. Box 26110
Santa Fe, New Mexico 87502
(505) 827-1557
Fax (505) 827-1544

GARY E. JOHNSON
GOVERNOR

MARK E. WEIDLER
SECRETARY

EDGAR T. THORNTON, III
DEPUTY SECRETARY

CERTIFIED MAIL
RETURN RECEIPT REQUESTED

July 1, 1996

G. Thomas Todd, Area Manager
Department of Energy
Albuquerque Operations Office
Los Alamos Area Office
Los Alamos, New Mexico 87544

Dear Mr. Todd:

RE: Approval of Closure Plan for the Controlled Air Incinerator
EPA I.D. No. EPA I.D. No. NM 0890010515

On May 13, 1996, the New Mexico Environment Department (NMED) released for a thirty (30) day comment period pursuant to New Mexico Hazardous Waste Management Regulations (HWMR-7), Subpart VI, Sections 265.112(d)(4) and 265.118(f) a proposed approval of Los Alamos National Laboratory's (LANL's) Amended Closure Plan for the Controlled Air Incinerator located at Technical Area 50. The comment period ended on June 12, 1996, with two (2) written comments received. Copies of the comments and responses are enclosed for your information. The comments did not address the proposed Closure Plan specifically, thus no changes are required in the Closure Plan for HRMB approval.

The New Mexico Environment Department hereby approves the proposed Closure Plan for the Controlled Air Incinerator (CAI). The amended plan includes the Dismantlement Revision, and replaces Attachment E.4 in LANL's Operating Permit, approved November 8, 1989. Enclosed please find a clean copy of the Closure Plan to be inserted into LANL's Operating Permit.

Please contact Mr. Michael Chacón of my staff at (505) 827-1561 if you have any questions.

Sincerely,

Ed Kelley, Ph.D, Director
Water and Waste Management Division

Enclosures

cc: Benito J. Garcia, Chief, HRMB
Barbara Hoditschek, RCRA Permits Program Manager
David Neleigh, EPA (6PD-N)
File - LANL TA-50 Red 96, and Reading

HRMB Responses to Comments on CAI Closure Plan

SECTION 1: Responses to First Commentor

Item 1: "I believe that the State of New Mexico Environment Department does not have sufficient confidence in the Los Alamos National Laboratory."

Response: 1) Please note that these responses represent HRMB only, and not NMED as a whole.

2) HRMB's purpose is to ensure that LANL complies with the regulations of the Resource Conservation and Recovery Act. Part of that process is public participation for which HRMB thanks you for taking the opportunity to be a part of. However, your comment does not specifically address the Amended Closure Plan.

Item 2: "As far as I am concerned, the Laboratory wrote the book on hazardous and radioactive materials."

Response: HRMB understands that this is a figure of speech expressing an opinion. See Item 1, Response 2.

Item 3: "Everyone else, including your department, DOE and the federal investigators, are all rookies compared with the trial and error education that these people have received through their work."

Response: HRMB understands that this is a figure of speech expressing an opinion. See Item 1, Response 2.

Item 4: "The Laboratory should be teaching you, as well as the other organizations, what it is all about."

Response: HRMB understands that this is a figure of speech expressing an opinion. See Item 1, Response 2.

Item 5: Nuclear Research and Development is absolutely necessary like pinto beans, some by products may be unpleasant and embarrassing but rectifiable."

Response: HRMB appreciates the analogy.

Item 6: "We have spent millions of dollars unnecessarily on hazardous and radioactive materials because of the testing and influx of all of the agencies involved in these responsibilities. Example: Two gas tanks on my commercial property would have cost me $20,000 to remove and to aerate contaminated hydrocarbon materials. But through the regulations and testing, and the manpower it took to send the multitude of 55 gallon drums full of

soil elsewhere with new soil coming in, over a year later and an estimated million dollars plus of cost to the DOE, it was ridiculous and criminal to blow that kind of money."

Response: See Item 1, Response 2.

Item 7: "Also, we had about 67 people involved in a small confined area, all with hard hats, and only two people were doing the digging. This was because of all these organizations involved."

Response: See Item 1, Response 2.

Item 8: "Simplification is necessary."

Response: The environmental community as a whole is aware of this need and much effort is being spent toward this goal. HRMB is an active participant in studying emerging, cost-effective technologies, the rapid commercialization of same, as well as studying regulatory reform, such as California's proposed use of Risk-Based Corrective Action, and New Jersey's proposed use of cost-benefit analyses of ground-water monitoring.

Item 9: "The Lab should have the lead in any of these endeavors, including the CAI, without mickey mouse interference of the rest of the populous and/or organizations that know not that they know not."

Response: See Item 1, Response 2.

Item 10: "Full appreciation and confidence must be given to the Los Alamos National Laboratory who wrote the book on hazardous and radioactive materials, and extremely necessary Nuclear Research."

Response: See Item 1, Response 2.

Item 11: "p.s. The optimum goal is to save time and money."

Response: HRMB is mandated by law to protect human health and the environment. Saving time and money is a secondary concern which is also addressed with LANL.

SECTION 2

Item 1: "As a consultant in 1994, I performed risk assessment studies of the Controlled Air Incinerator (CAI), in preparation for re-start after extensive improvement

retrofits. This is a safe facility with miniscule risk to the region, while offering benefits of volume reduction and chemical conversion of hazardous wastes now in storage at LANL."

Response: HRMB appreciates your singular insight and experience with the CAI. HRMB agrees that operated correctly, the CAI is not a threat to human health and the environment, and presents the benefits you mention.

Item 2: "Opponents waged incessant misrepresentation of environmental impact and benefits of operation. It is very unfortunate that DOE and LANL officials lowered the priority of the CAI to the point that LANL now proposes to permanently close and dismantle this useful facility, wasting the money already invested."

Response: HRMB acknowledges your concerns.

Item 3: "If the CAI is beyond any possible resurrection, the Amended Closure Plan should be approved without delay."

Response: HRMB acknowledges your opinion.

Item 4: "I urge you to resist any efforts by anti-nuclear activists to drag the issue along for their own publicity purposes."

Response: HRMB appreciates your concern, however, no such activity is anticipated.

Item 5: "Because of the apparent irreversible budgetary decision, I see no useful purpose to be served by a public hearing."

Response: HRMB acknowledges your opinion.

Item 6: "There may be some in this community that will seek a hearing simply to obtain a pulpit for further frightening the public about Los Alamos activities and about incinerators in general. Such a pulpit should not be provided."

Response: The process for requesting a public hearing includes disclosing the issues to be raised. If no substantive issues are presented, cause for a hearing may not be justified. The decision to hold a hearing is made by upper management after considering all the issues presented in hearing requests.

AMENDED
CLOSURE PLAN

ATTACHMENT E.4
DISMANTLEMENT REVISION

AMENDED CLOSURE PLAN
PERMIT ATTACHMENT E.4.
DISMANTLEMENT REVISION
NM 0890010515-1

E.4 Chemical Waste Incinerator

The chemical waste incinerator [Controlled Air Incinerator (CAI)] is located in Building 37 at Technical Area 50 (Figure E.4.1) of the Los Alamos National Laboratory (LANL). The original CAI was installed in 1977 and first operated in 1978. The CAI and associated systems were originally research and development (R&D) tools used to prove the viability of incineration as a treatment method for TRU waste. R&D testing ceased in 1987 so that modifications (upgrades) to the system, identified during the initial phase of operation, could be performed. RCRA trial burns were conducted just prior to the cessation of R&D activities. Between 1978 and 1987 a total of 36 campaigns had been completed at the CAI.

LANL received its Hazardous Waste Facility Permit on November 8, 1989 and activities after that date have been in accordance with its permit. Hazardous wastes currently in storage at LANL pursuant to LANL's Hazardous Waste Facility Permit are being managed through shipment off site for treatment and disposal.

The CAI is rated at a nominal 45 kilograms per hour waste feed throughput. The CAI is currently authorized to incinerate Toxic Substance Control Act (TSCA) regulated waste and permitted to incinerate Resource Conservation and Recovery Act (RCRA) regulated waste.

The incinerator was upgraded prior to permit issuance in November 1989 to add liquid waste tanks, solid waste feed preparation lines, a gravity ash removal system, a high-efficiency off-gas cleanup system, and backup utility systems. The combustion chamber was modified to permit effective incineration of waste in solid, liquid, slurry, or gaseous form. Particular attention continues to be given to engineering for proper containment of radioactivity.

CAI system modifications and upgrades since permit issuance were intended to replace equipment due to normal wear or to upgrade existing equipment for routine operations. Upgrades focused on increased component life, increased corrosion resistance, and improved electronics. Modifications for these changes to the CAI were submitted on June 1995 to NMED for its review and approval.

A review of the feed summary data for the CAI indicates that between May 1978 and March 1987, a total of 36 campaigns had been

completed. The feed summary data indicate that the CAI was not used to burn listed wastes. Characteristic waste was included in Run 23. Run 23, March 1987 included ignitable (D001) waste scintillation fluids absorbed by corn cob fractions. The scintillation fluids meet the definition of characteristic as defined at 40 CFR 261 Subpart C *Identification of Characteristic Waste*. The CAI campaigns included equipment checks, treatability studies, efficiency studies, incineration of PCB contaminated materials under TSCA, a RCRA trial burn, and burns of transuranic (TRU) wastes. Eight of the 36 CAI campaigns involved radioactive components. A comprehensive feed summary is provided in Appendix 1.

This closure plan is limited to CAI components to demonstrate closure. This closure plan does not include the building utilities, the building structure, or the waste storage areas located within TA-50, Building 37. Closure activities will be conducted concurrent with the dismantlement and removal of the CAI from the site. During RCRA and TSCA closure, CAI components (i.e., combustion chambers, exhaust ducts, quenching tower, absorption tower, high efficiency particulate air [HEPA] filters, carbon bed adsorber, exhaust stack, ash removal system, liquid waste feed system, and gloveboxes) will be sampled and surveyed to identify the presence of radiological and hazardous contamination. Decontamination activities will be conducted to support reuse and reclamation to the extent practicable. Materials that cannot be reused or reclaimed and wastes generated from decontamination will be characterized using sample results and waste analysis. The refractory used in the incinerator contains chromium, a characteristic hazardous waste for toxicity. The incinerator refractory, if disposed, will be sampled and managed in accordance with the results of sampling and survey analysis. If the waste is determined to contain hazardous constituents it will be disposed of in a RCRA permitted treatment, storage, or disposal facility (TSDF).

E.4.1 Estimate of Maximum Waste in Storage and Treatment

No hazardous wastes are currently in storage for treatment at the CAI. Therefore, the CAI will have no inventory of hazardous waste at the time of closure.

E.4.2 Description of Waste Handled

The CAI and the exhaust gas treatment systems are capable of combusting a variety of wastes, including RCRA-regulated hazardous waste, mixed waste, TSCA-regulated PCB waste, low-level radioactive waste, and TRU waste. The hazardous and mixed waste feeds initially intended for treatment at the CAI included a mixture of

liquid and solid hazardous wastes composed of various organic solvents and liquids, as well as chemically-contaminated paper, wood, and plastics. As stated earlier in this plan, these hazardous waste streams are being treated at off-site commercial facilities. Mixed wastes are planned to be treated on-site in other units or at other alternative commercial and internal facilities with capacity to treat and dispose of mixed wastes. The CAI was permitted to burn all HWMR-5, Part II, Appendix VIII constituents with an incinerability ranking equal to or better than carbon tetrachloride (for the CAI, the incinerability ranking is based on organics with a heat capacity greater than carbon tetrachloride).

A review of feed summary data indicates that the CAI was not used to burn any RCRA-regulated wastes that contain HWMR-5, Part II, Appendix VIII constituents. However, as stated previously, Run 23 contained waste scintillation fluids that meet the definition of characteristic waste. Appendix 1 summarizes the feed summary data, the run date, feed description, and basis for regulatory status of the feed material.

E.4.3 Closure Procedure

LANL will conduct RCRA closure of the CAI based on the documentation that no RCRA-regulated listed wastes were treated in the unit and that the ignitable characteristics of Run 23 were treated through incineration as specified at 40 CFR Part 268 Appendix VI. To ensure that closure of the CAI is protective of both human health and the environment, LANL will conduct sampling of the CAI, as described in Section E.4.4 of this closure plan, to verify that no HWMR-5, Part II, Appendix VIII hazardous constituents are present.

Radiological surveys will also be conducted to ensure that the requirements of U.S. Department of Energy (DOE) Orders 5400.5 "Radiation Protection of the Public and the Environment" and 5820.2A "Radioactive Waste Management" are met. TSCA closure activities of the CAI will be conducted concurrent with dismantlement, removal, and RCRA closure.

E.4.3.1 Partial Closure

Partial RCRA closure of the CAI is not being pursued. The CAI is to be closed as a RCRA unit including, but not limited to, the combustion chambers, all waste feed, exhaust, filter, and residue management components.

E.4.3.2 Final Closure

This section describes closure of the CAI. At the beginning of closure, the CAI will be surveyed for radioactive contamination to determine radiological boundaries and personal protective equipment (PPE) requirements. Once radiological boundaries are established, swipe samples will be taken and analyzed to verify the absence of hazardous constituent contamination. Verification will consist of sampling the principal CAI components throughout the system that have been in contact with material feeds, residues, or secondary wastes. If RCRA hazardous contamination is found, components amenable to decontamination will be cleaned with detergent solution and/or steam cleaning. The spent cleaning solution will be collected and analyzed for hazardous constituents. If no constituents are detected statistically above background, these components will be deemed decontaminated and can then be reused or disposed of as waste. If components are not amenable to decontamination, they will be managed as newly generated hazardous, toxic, or mixed waste, as indicated through waste analysis, in accordance with Laboratory procedure. All radioactive components will be decontaminated to the extent practicable and disposed of according to appropriate DOE Orders. Sampling procedures are described below in Section E.4.8 of this closure plan. Samples will be analyzed for the hazardous constituents listed in Table E.4-2.

Analytical results will be used to verify the absence of hazardous constituents in the CAI components or qualify the regulatory status of CAI waste. These analytical results along with the documentation of CAI closure activities will be used to validate

E.4.3.3 Amendment of the Closure Plan

If it is necessary to amend this closure plan, LANL will submit a written notification of, or request for, a permit modification describing any change in operation or unit design that could affect the closure plan. The written notification or request will include a copy of the amended closure plan for approval by the NMED. LANL will submit a written notification of, or a request for, a permit modification to authorize a change in the approved plan if either of the following occur:

1. There are changes in operating plans, unit design, or waste types treated that affect the closure plan

2. Unexpected events occur during closure that require modification of the approved closure plan

LANL will submit a written request for a permit modification with a copy of the amended closure plan no later than 60 days after an

occurrence of an unexpected event that affects the closure plan. If the unexpected event occurs during closure, the permit modification will be requested within 30 days of the occurrence. If the Secretary of the NMED requests a modification of the closure plan during closure, a closure plan modified in accordance with the request will be submitted within 30 days of notification.

E.4.4 Verification of No Contamination

Sampling for verification will be based on a biased sampling plan. Sample locations will be determined using engineering judgement and knowledge of the CAI system layout and past operation to obtain samples from principal treatment components with the highest likelihood for contamination (Figure E.4-5). Additionally, a minimum of one sample will be collected from an area with a low probability of contamination as a check on the biased sampling location data. This should provide a conservative data base from which a determination that RCRA constituents are absent can be made.

Multiple samples from selected locations will be acquired to provide adequate statistical data control. The samples to be collected from each location, as well as the specific location and sampling method, will be specified in the QA/QC plan. Initial sampling locations are listed below:

- Solid Waste feed — Sampling of the solid waste feed glovebox
- Liquid waste feed — Sampling of the liquid waste feed tanks
- Quenching tower — Sampling of the quenching tower
- Adsorption tower — Sampling of the adsorption tower
- HEPA filters — Sampling of the outlet from the HEPA filter back
- Activated carbon adsorber — Sampling of the inside housing of the activated adsorber
- Exhaust stack — Sampling of the inside of the exhaust stack

- Ash Removal System Sampling of the gravity ash dropout hopper

- Combustion Chamber Sampling of the combustion chamber

The constituents listed in Table E.4-2 include regulated constituents which were expected to be treated in the unit. A scan for volatile and semivolatile organics will be performed to ensure that solvents commonly used at LANL have not contaminated the unit. Two field blanks will be prepared and analyzed for the constituents listed in Table E.4-2. Analytical results from field blanks and control samples of the solid waste feed glovebox will provide background data for verification of the absence of contamination. The glovebox was chosen as a control location because the component has never been used for managing wastes. Analytical procedures will conform to U.S. EPA SW-846 methods. CAI components will be considered to be contaminated if verification samples show a statistically significant increase in the listed constituents over the field blank and control samples.

LANL will carefully review all operational and sampling analytical data to provide for a determination of whether there has been a release external to the incinerator. If a release has occurred, the appropriate decontamination and verification sampling will be done by LANL. Such sampling would include the structures within the building, building floors, etc., plus environmental media (e.g. soils) if it should be so indicated. All sampling and analysis plans, which are not addressed procedurally in this Closure Plan, are subject to the approval of NMED.

Absence of hazardous contamination will be verified if:

1. No hazardous constituents are detected in samples from the CAI locations, or

2. Hazardous constituents detected in samples from the CAI locations are equal to or less than, at the 0.01 confidence level, their concentration in the unused wash water field blank or background sample.

E.4.5 Verification of Decontamination

Sampling will be used to verify the success of decontamination activities used during CAI closure. Before decontaminating a CAI component, two samples will be taken of the clean wash solution and analyzed for the constituents listed in Table E.4-2 of this attachment. These analytical results will provide background data for decontamination verification.

Dirty wash-down solutions will be analyzed for the constituents listed in Table E.4-2. Analytical procedures will conform to the methods found in SW-846. Components will be considered contaminated if the dirty wash solutions show a significant increase in the listed constituents over the clean wash solution.

Successful decontamination for each component is defined as one of the following:

1. No detectable hazardous constituents in the final sample.

2. Detectable hazardous constituents in the final sample are equal to or less than, at the 0.01 confidence level, their concentration in the unused wash water or background sample.

An alternative demonstration of decontamination may be proposed and justified at the time of closure as circumstances indicate. The Secretary will evaluate the proposed alternative in accordance with the standards and guidance in effect and, if approved, incorporate, by permit modification, the alternative into the closure plan.

E.4.6 Closure Schedule

Closure activities will be conducted in accordance with an approved closure plan. The year of closure for the CAI is estimated to be 1996. The closure schedule is provided in Table E.4-1. Federal Acquisition Regulations require competitive procurement in obtaining contract support for this type of effort, therefore contracts will be secured before closure begins. The closure activities described in this plan are estimated to take 250 days.

In the event that closure or closure activities cannot be completed at the CAI within 250 days of notification of closure to the New Mexico Environment Department (NMED), LANL will notify the Secretary of the NMED in accordance with extension requirements.

E.4.7 Closure Certification

An independent registered professional engineer and the Permittee or his representative shall witness the closure and ensure that the closure follows this plan. Upon completion of closure, the engineer and the DOE shall prepare a letter certifying that the facility has been closed in accordance with this plan. The letter shall be dated and signed by each party, stamped by the registered professional engineer, and the original copy submitted by the DOE to the Secretary of NMED. One copy shall be maintained at the DOE office and one copy maintained by LANL.

E.4.8 Sampling and Analytical Procedures

This section describes the procedures and methods used for sampling and analysis. While the procedures and methods are specific, any applicable procedure or method given in the current update of *Test Methods for Evaluating Solid Waste, Physical/Chemical Methods* (SW-846) may be used if conditions or experience shows the alternate method to be more appropriate. All analytical procedures actually used will be annotated in the final closure report.

Samples will be taken, placed in bottles, sealed, tagged, and immediately packed in vermiculite, sawdust, or, if refrigeration is required, an insulated container with ice. Sample containers appropriate for the requested analyses will be used for all samples. Requirements for sample containers, preservation, and holding times are summarized in Tables E.4-3 and E.4-4. Disposable sampling equipment may be used.

Personal protective clothing and respirator protection will be worn at all times as identified by LANL's Industrial Hygiene and Safety Group and in the approved Radiological Work Permit. Sampling activities will be conducted in a manner to ensure that worker exposure levels are maintained as low as reasonably achievable (ALARA).

E.4.8.1 Analytical Procedures

All sample analyses will be conducted using methods prescribed in the current update of SW-846, including those for quality assurance/quality control (QA/QC). Target detection limits, analytical methods, and instrumentation for metals, organics, and miscellaneous analyses are listed in Tables E.4-5, E.4-6, and E.4-7.

E.4.8.2 Field and Laboratory Quality Assurance Quality Control

QC activities will include collection of the following samples: trip blanks, duplicate or split samples, field blanks, and equipment rinsate blanks. QC samples are described in this section and summarized in Table E.4-8. QC samples will be analyzed for the same parameters as the verification samples (Table E.4-1). QC samples will be assigned unique identification numbers (similar to verification sample numbers) that do not indicate to the laboratory that the samples are for QA/QC purposes.

A trip blank will be prepared whenever samples are collected for volatile organic compounds analysis. The trip blank is a sample container filled with organic-free deionized water. The filled container is taken to the sampling site in the cooler or sample

carrier, remains unopened, and is shipped to the analytical laboratory along with the samples. One trip blank will be included per cooler or sample carrier.

One sample for every ten samples will be either duplicated or split. The duplicated or split sample will be identified by a code so that its source is not available to the analytical laboratory, but analytical results can be compared to its twin.

Blank samples collected will include field blanks and equipment rinsate blanks. A field blank is a sample collected to assess the ambient conditions at the sampling site. The field blank for verification of no contamination is a swipe prepared in the laboratory that will be opened to the ambient conditions of the site, removed with sampling tongs, and replaced into the sampling container. A field blank for decontamination verification is a sample of organic-free deionized water poured into a sample container under normal sampling conditions. Frequency of blank samples will be 1 in 20 samples. If fewer than 20 samples are collected, at least one blank sample will be collected. An equipment rinsate blank is collected to assess the cleanliness of the sampling equipment. The sampling equipment is cleaned according to the procedures described below in Section E.4.8.3, then organic-free deionized water is poured over the decontaminated equipment's sampling surface and collected in a sample container.

Instrument calibration and maintenance are field activities subject to QC procedures. Field equipment requiring calibration will be calibrated and maintained using the manufacturer's instructions and appropriate standard operating procedures.

LANL will ensure that the on-site or contract analytical laboratory operates under a quality assurance program plan (QAPP) which meets the requirements in the current update of SW-846. QC procedures in the analytical laboratory are guided by their QAPP. In order to assess the quality of the analytical data, the analytical laboratory is required to run QC samples to establish accuracy and precision. Laboratory QC procedures are summarized in Table E.4-9.

E.4.8.3 Cleaning of Sampling Equipment

To prevent cross-contamination of samples, sampling equipment will be cleaned prior to each use with a warm soap solution, rinsed several times with tap water, rinsed with distilled water, drained of excess water, and air-dried or wiped. A disposable sampler may be presumed clean if still in a factory sealed wrapper.

E.4.8.4 Refractory Sampling

All collectable treatment residues have been removed from the CAI and therefore the only sampling of solids will be of the refractory lining in the combustion chamber. The refractory lining is a porous material that is imbedded with ash and is not amenable for removal using incinerator operating procedures. A representative sample of the refractory material will be obtained as follows:

1. Use a clean brush to scrub small, equal portions of material from the surface of the refractory lining at several locations along the bottom of the chamber.

2. Combine the material in the container until the gram volume of sample required for the analysis is obtained.

3. Cap the sample container and attach a label and seal.

4. Record sampling information in the field log book as described in Section E.4.8.

5. Complete the sample analysis request form and chain-of-custody record.

E.4.8.5 Swipe Sampling

Swipe samples will be taken to identify hazardous constituent contamination on CAI components. Samples will be collected by swiping areas of components identified in Section E.4.4 that have the greatest likelihood for contamination (e.g., stains, seams, basins). Swipe samples will be conducted as follows:

1. Use a standardized template [10 centimeters (cm) x 10 cm] to delineate the area of sampling.

2. Use a gauze pad or glass wool of known size and weight, saturated with the appropriate solvent (e.g., organic-free deionized water, hexane, acetone) for the swiping medium. The gauze, or glass wool, will be prepared in the laboratory with the analyte designation noted on the label prior to entry to the field.

3. Store the swiping medium in sealed glass vials until it is used for the swipe test.

4. Perform the swipe very quickly after air exposure to avoid losing the solvent medium.

5. Place swipes into sample containers immediately upon completion of the swipe.

6. Close, label, and seal the sample container to ensure the integrity of the sample.

7. Record sampling information in the field log book as described in Section E.4.9.

8. Complete a LANL sample analysis request form and a chain-of-custody record for each sample.

E.4.8.6 Liquid Sampling

To determine whether CAI components have been successfully decontaminated, wash water used in the decontamination process will be sampled to identify the presence or absence of contamination. Waste water generated from such decontamination activities will be managed in accordance with applicable regulations. Wash water solutions will be sampled before use to determine background parameters; dirty wash water used in cleaning components will also be sampled in order to identify any hazardous constituent contamination. Samples will be collected by spraying wash solution onto areas of the components identified in Section E.4.8 that have the greatest likelihood for contamination (e.g., bends, horizontal surfaces, seams, basins). Brushes may be used to help dislodge particulate and laminated residues from the surfaces of the sampling area. Washed areas will be rinsed and all waters collected using vacuum or manual pumps. The volume of wash water collected will be recorded in the log book. Wash waters will be transferred to sampling containers using glass tubes to obtain representative samples as follows:

1. Spray wash solution onto areas of the sampling location that have the greatest likelihood for contamination (e.g., bends, horizontal surfaces, seams, basins, etc.).

2. If areas of slag, ash, or lacquer remain after spraying, use a sampling brush to dislodge the material.

3. Use vacuum or pump to collect washwaters from the sampling location. Use caution not to allow washwaters to migrate from the sampling area.

4. Ensure that sampling equipment is present (glass tube with stopper, sample container, laboratory wipe, pen, etc.). Ensure that the stopper provides a tight closure.

5. Slowly lower the glass tube into the liquid at a rate that permits the levels of the liquid inside and outside the glass tube to be about the same. If the level of the liquid in the glass tube is lower than that outside the glass tube, the sampling rate is too fast and will result in a nonrepresentative sample.

6. When the glass tube hits the bottom of the liquid container, push the stopper in to close the glass tube.

7. Slowly withdraw the glass tube from the container with one hand while wiping the glass tube with a disposable cloth with the other hand.

8. Carefully discharge the sample into a sample container by slowly opening the glass tube. This is done by slowly pulling the stopper from the glass tube while the lower end of the sampler is positioned in the sample container.

9. Cap the sample container and attach a label and seal.

10. Record sampling information in the field log book as described in Section E.4.9.

11. Complete the sample analysis request form and chain-of-custody record.

E.4.9 Sample Handling and Documentation

Samples will be analyzed either at LANL or at a commercial laboratory. In either case, each sample will be labeled, sealed, and accompanied by a chain-of-custody and a sample analysis request form.

The sample container will be sealed with a gummed paper seal attached to the container in such a way that the seal will be broken in order to open the container. The seal and sample label will be completed with a waterproof pen. An example of a sample seal is shown in Figure E.4.2.

The sample label is necessary to prevent misidentification of samples and shall include, if applicable, the sample location number referenced to CAI components. The site information will include information necessary to identify the area sampled within the component specified (e.g., sump basin of the quenching tower). An example of a sample label is shown in Figure E.4.3.

The chain-of-custody record is necessary to trace sample possession from the time of collection and will accompany every sample. This

chain-of-custody record consists of two pages with the original accompanying the shipment and the copy retained by LANL. An example of this form is shown in Figure E.4.4.

A separate closure sampling log book will be kept and will contain all information pertinent to closure surveys and sampling. The log book shall have bound and consecutively numbered pages in an 8-1/2 by 11-inch format.

Minimum entries shall include:

a. Purpose of sample (closure sampling)

b. Location of sampling (component name and location)

c. Name and address of person making log entry

d. Type of sampling process

e. Number and volume of sample

f. Description of each sampling location, sampling methodology, equipment used, etc.

g. Date and time of sample collection

h. Sample destination and transporter's name (name of laboratory, United Parcel Service, etc.)

i. Diagram or photograph of the sampling location, if any

j. Field observations (radiological status, break in utility service, etc.)

k. Field measurements, if any (pH, flammability, conductivity, explosivity, etc)

l. Collector's sample identification number(s)

m. Signature of person responsible for the log entry

Sampling situations vary widely. No specific rule can be given as to the extent of information that will be entered in the log book. Sufficient information will be recorded so that the sampling situation can be reconstructed without relying on the collector's memory.

The sample shipment and chain-of-custody record is accompanied by a sample analysis request form. The sample analysis request form

has two portions: field and laboratory. The field portion of this form will be completed by the person collecting the sample and include most of the pertinent information noted in the log book. The laboratory portion will be completed by the laboratory personnel when the sample is received.

E.4.10 Quality Assurance/Quality Control

The Permittee shall designate a qualified individual or individuals to independently oversee the closure activities and report directly to LANL management on the quality of the performance of this closure. This individual will personally observe a portion of the key activities, ensure that sample blanks are obtained, and review the analytical reports for accuracy and adequacy. A written QA/QC plan in accordance with SW-846 guidance shall be prepared and followed, with variations from the QA/QC plan documented and explained. The designated individual shall prepare a written statement for the final closure report commenting on the adequacy of the analysis verifying closure.

E.4.11 Final Closure Report

Upon completion of the closure activities, the Permittee shall submit a final closure report certified by a New Mexico independent reegistered professional engineer to the Secretary of NMED. The report shall document the final closure and contain, at a minimum, the following:

a. The certification described in paragraph E.4.6

b. Any variance from the approved activities and the reason for the variance

c. A tabular summary of all sampling results (including QC sample results), showing:

    1. Sample identification
    2. Sampling location
    3. The datum reported
    4. Detection limit for each datum
    5. A measure of analytical precision (e.g. uncertainty, range, variance)
    6. Identification of analytical procedure
    7. Identification of analytical laboratory

d. A QA/QC statement on the adequacy of the analyses and the decontamination determination

e. The location of the file of supporting documentation:

1. Log books
2. Laboratory sample analysis reports
3. The QA/QC documentation
4. Chain of custody records

f. Disposal location of all regulated and nonregulated residues

g. A certification of accuracy of the report

TABLE E.4-1

Closure Schedule
Controlled Air Incinerator[a]

Activity	Maximum Time Required[b]
Preclosure Let contract request for proposals	-70
Receive proposals	-40
Select contractor and award contract	-10
Closure Begin closure activities	Day 0
Survey CAI external components, associated external subsystems, for radiological contamination	Day 30
Obtain samples for RCRA hazardous waste constituents and submit for analysis	Day 75
Receive sample analysis	Day 105
Obtain additional samples (if necessary)	Day 135
Receive sample analysis (if necessary)	Day 180
Obtain certification of closure	Day 240
Submit final closure report to NMED	Day 250

[a]Assumes RCRA closure; no incineration of RCRA hazardous wastes or hazardous constituents; and sample
and analysis of the CAI and associated external subsystems.
[b]The schedule above indicated calendar days from the beginning of closure by which activities will be completed.
Some activities may be conducted simultaneously.

TABLE E.4-2

Analytical Parameters for CAI

Concentration of Metals	Organics	Other
Arsenic Barium Beryllium Cadmium Chromium Lead Mercury Nickel Selenium Silver Thallium	Halogenated volatile organics Nonhalogenated volatile organics Acid-extractable semivolatile organics Base-neutral extractable semivolatile organics	Cyanides Ignitability Corrosivity/pH

Metals will be analyzed for total content.

Any metal whose total concentration nears, equals, or exceeds the standard for the Toxicity Characteristic Leaching Procedure (TCLP) will be analyzed using TCLP methods. All data will be provided in the final closure report.

Analytical methods will follow those provided in "Test Methods for Evaluating Solid Waste," U.S. Environmental Protection Agency (EPA) SW-846, and may be superseded by more current methods from SW-846 or alternate EPA-approved methods.

TABLE E.4-3

Sample Containers, Preservation, and Holding Times for Liquid Samples

Analyte Group	Container	Preservative	Holding Time
Target compound volatile organics	2 x 40 ml G[a] septa vials	HCl[b], Cool 4°C	14 days from field collection to determinative analysis
Target compound semivolatile organics	2 x 1 liter AG[a] (teflon lined caps)	Cool 4°C[1]	7 days from field collection to preparative extraction 40 days from preparative extraction to determinative analysis
Target analyte metals (except mercury)	1 liter P[c] or G[e]	HNO_3[d] to pH < 2	180 days from field collection to determinative analysis
Mercury	1 liter P[c] or G[e]	HNO_3 to pH < 2 Cool 4°C	28 days from field collection to determinative analysis
Cyanides	P[c] or G[e]	NaOH[f] to pH ≥ 12 Cool 4°C[2,3]	14 days from field collection to sample preparation
Corrosivity/pH	1 liter P[c] or G[e]	N/A	As soon as possible for pH
Ignitability	1 liter P[c] or G[e]	N/A	

[a]AG = Amber glass
[b]HCl = Hydrochloric acid (if no residual chlorine is present, adjust the pH < 2 with HCl, H_2SO_4 or $NaHSO_4$, if residual chlorine is present, add sodium thiosulfate [4 drops of 10 percent solution]).
[c]P = Polyethylene
[d]HNO_3 = Nitric acid
[e]G = Glass
[f]NaOH = Sodium hydroxide, 50 percent

[1]If residual chlorine is present, add 3 ml of 10 percent sodium thiosulfate per gallon.
[2]Determination of presence of oxidizing agents and treatment thereof to be performed as per SW-846 Method 9010A.
[3]Detergents and surfactants, if a problem, can be extracted as described in SW-846 Method 9010A.

Source: SW-846, Update I and Update II

TABLE E.4-4

Sample Containers, Preservation, and Holding Times for Refractory Samples

Analyte Group	Container	Preservative	Holding Time
Target compound volatile organics	8 oz WM[a]-G[b] Septum-sealed	Cool 4°C	14 days from field collection to determinative analysis or TCLP extraction 14 days from TCLP extraction to determinative analysis
Target compound semivolatile organics	2 x 120 ml WM[a]-G[b] Teflon-lined cap	Cool 4°C	14 days from field collection to TCLP extraction 7 days from field collection or TCLP extraction to preparative extraction 40 days from preparative extraction to determinative analysis
Target analyte metals (except mercury)	8 oz WM[a]-G[b] or P[c]	Cool 4°C HNO_3[d]	180 days from field collection to determinative analysis or TCLP extraction 180 days from TCLP extraction to determinative analysis
Mercury	1 liter P[c] or WM[a]-G[b]	HNO_3[d] to pH < 2	28 days from field collection to determinative analysis or TCLP extraction 28 days from TCLP extraction to determinative analysis
Cyanides	G[b] or P[c]	Cool 4°C[1]	14 days from field collection to sample preparation

[a]WM = Wide-mouth
[b]G = Glass
[c]P = Polyethylene
[d]HNO_3 = Nitric acid - Preservative not added until after TCLP extraction. Preservative added to the extract.

[1]Solid may be extracted prior to analysis by SW-846 Method 9013.

Source: SW-846, Update I and Update II

TABLE E.4-5

Target Detection Limits, Analytical Methods, and Instrumentation for Metals Analysis

Analyte	Target Detection[a] Limit (μg/L)	EPA SW-846 Analytical Method	Instrumentation[b]
Arsenic	10	6010A, 7060A	ICP, GFAA
Barium	200	6010A, 7080A, 7081	ICP, FLAA, GFAA
Beryllium	5	6010A, 7090, 7091	ICP, FLAA, GFAA
Cadmium	2	6010A, 7030, 7131A	ICP, FLAA, GFAA
Chromium	10	6010A, 7190, 7191	ICP, FLAA, GFAA
Lead	5	6010A, 7420, 7421	ICP, FLAA, GFAA
Mercury	0.2	7470A	CVAA
Nickel	40	6010A, 7520	ICP, FLAA
Selenium	5	6010A, 7740	ICP, GFAA
Silver	10	6010A, 7760A, 7761	ICP, FLAA, GFAA
Thallium	10	6010A, 7840, 7841	ICP, FLAA, GFAA

[a]Detection limits listed are for drinking water. Actual detection limits may be higher depending on sample composition and matrix type.
[b]ICP - Inductively Coupled Plasma Emission Spectroscopy
GFAA - Graphite Furnace Atomic Absorption Spectroscopy
FLAA - Flame Atomic Absorption Spectroscopy
CVAA - Cold Vapor Atomic Absorption Spectroscopy

TABLE E.4-6

Target Detection Limits[a], Analytical Methods, and Instrumentation for Organics Analysis

Analyte (Group)	Regulatory Limits	EPA SW-846 Analytical Method	Instrumentation[b]
Target Compound List Volatiles + 10 Tentatively Identified Compounds (TICs)	10 µg/L water 10-120 µg/kg solids	8240B, or 8260A	GC/MS
Target Compound List Semivolatiles + 20 TICs	10 µg/L water 330-50,000 µg/kg solids	8250A, or 8270B	GC/MS

[a]Detection limits expressed as practical quantitation limits.
[b]GC/MS = Gas chromatography/mass spectrometry

NOTE: µg/L and mg/L used for liquid samples and TCLP extracts.
µg/kg and mg/kg used for residues.
Use the most appropriate for the magnitude of the number.

TABLE E.4-7

Analytical References
for Miscellaneous Methods

Analyte/Property	EPA SW-846 Analytical Method
Cyanides	9010A
Corrosivity/pH	9040B or 9045C and 1110
Ignitability	1020A or 1010
TCLP[1]	1311

[1]Toxicity Characterization Leaching Procedure is to be utilized for the analysis of refractory samples.

TABLE E.4-8

Summary of Field Quality Control Samples

QC Sample Type	QC Sample Matrix	Applicable Analysis	Frequency	Purpose	Acceptance Criteria	Corrective[a] Action
Trip Blank	Water	Volatiles	One set (2) per shipping cooler containing samples	Monitor possible sample contamination in field	-[b]	Advisory—no action required
Field Blank	Water	Volatiles, Semivolatiles, Metals	One sample per sampling event (can prepare and hold pending sample results)	Monitor field sample contamination/ air contamination	-[b]	Advisory—no action required
Field Duplicate	Refractory/ Water	Volatiles, Semivolatiles, Metals, TCLP	One for every 20 samples or 5 percent minimum	Documents precision of sampling process	Analytical method criteria, if applicable	Advisory—no action required
Equipment Rinsate Blank	Wash water	Volatiles, Semivolatiles, Metals	One sample per day (can prepare and hold pending sample results)	Monitor decontaminatio n effectiveness and sample cross contamination	-[b]	Advisory—no action required

5/23 - never did this b/c never leased sampling equipment

[a]EPA Functional Guidelines for Data Validation may apply.
[b]For volatiles and semivolatiles analysis, if blank shows detectable levels of any common laboratory contaminant (methylene chloride, acetone, 2-butanone, toluene, and/or any phthalate ester), sample must exhibit that contaminant at a level 10 times the quantitation limit to be considered detectable. For all other contaminants, sample must exhibit the contaminant at a level 5 times the quantitation level to be considered detectable.
Source: SW-846, Update I and Update II

TABLE E.4-9a

Summary of Laboratory Quality Control Procedures
by Analytical Method

Target Compound Volatile Organics

EPA SW-846 Analytical Method	Quality Control Check	Frequency	Acceptance Criteria	Corrective Action
8240B or 8260A	Instrument performance: mass calibration/ion abundance pattern	Every 12 hours of analysis time or every batch	Per method	Repeat until acceptance criteria satisfied
	Initial calibration: instrument sensitivity and linearity of response	Five concentration levels; after any instrument performance failure; check prior to sample analysis	Meet SPCCs[a] and CCCs[b] criteria per method	Repeat calibration
	Continuing calibration	Every 12 hours of analysis time or every batch	Meet SPCCs and CCCs criteria per method	Determine problem, correct and reanalyze a continuing calibration or recalibrate.
	Internal standards	Added to all calibration standards, field samples, QC[c] samples, and blanks	Extracted ion current profile (EICP)[a]; Δ -50% to +100% Retention time shifts < 0.50 minutes[e]	Correct malfunction; reanalyze sample per method criteria
	Method blank	Every 12 hours of analysis time or every batch	< 5 times quantitation limit for methylene chloride, acetone, 2-butanone; all other compounds ≤ quantitation limit	Determine source of contamination and document corrective action; reanalyze samples
	Matrix spike and matrix spike duplicate	Each analytical batch	Per method	Prepare and analyze QC reference standard per method

TABLE E.4-9a

Summary of Laboratory Quality Control Procedures
by Analytical Method

Target Compound Volatile Organics
(Continued)

EPA SW-846 Analytical Method	Quality Control Check	Frequency	Acceptance Criteria	Corrective Action
8240B or 8260A (Continued)	System monitoring compounds (surrogate compounds)	Every calibration standard, method blank, QC sample, field sample, matrix spike, matrix spike duplicate	Per method and matrix	Check instrument and calculations; reanalyze per method criteria

[a]SPCC = System performance check compounds
[b]CCC = Calibration check compounds
[c]QC = Quality control
[d]EICP = Extracted ion current profile
*This criteria applies to the internal standards but is only evaluated for the continuing calibration check.

SOURCE: SW-846, Update I and Update II

TABLE E.4-9b

Summary of Laboratory Quality Control Procedures
by Analytical Method

Target Compound Semivolatile Organics

EPA SW-846 Analytical Method	Quality Control Check	Frequency	Acceptance Criteria	Corrective Action
8250A or 8270B	Instrument performance: mass calibration/ion abundance pattern	Every 12 hours of analysis time or every batch	Per method	Repeat until acceptance criteria satisfied
	Initial calibration: instrument sensitivity and linearity of response	Five concentration levels; after any performance failure; check prior to sample analysis	Meet criteria for SPCCs[a] and CCCs[b] per method	Repeat calibration
	Continuing calibration	Every 12 hours of analysis time or every batch	Meet criteria for SPCCs and CCCs per method	Determine problem, correct and analyze another continuing calibration, or repeat calibration
	Internal standards	Added to all calibration standards, field samples, QC[c] samples, and blanks	EICP[d] Δ -50% to +100% Retention time shifts < 0.50 minutes[e]	Correct malfunction: reanalyze sample per method criteria
	Method blank	Each batch of samples of similar matrix and concentration level, or each extraction batch	< 5 times quantitation limit for phthalate esters; all other compounds ≤ quantitation limit	Determine source of contamination; document corrective action; reextract and reanalyze samples
	Matrix spike and matrix spike duplicate	Each analytical batch	Per method	Prepare and analyze QC reference standard per method

TABLE E.4-9b

Summary of Laboratory Quality Control Procedures
by Analytical Method

Target Compound Semivolatile Organics
(Continued)

EPA SW-846 Analytical Method	Quality Control Check	Frequency	Acceptance Criteria	Corrective Action
8250A or 8270B (Continued)	System monitoring compounds (surrogate compounds)	Each field sample, blank, QC sample, and calibration standard	Matrix specific per method limits	Check instrument and calculations; reextract and reanalyze per method criteria

[a]SPCC = System performance check compounds
[b]CCC = Calibration check compounds
[c]QC = Quality control
[d]EICP = Extracted ion current profile
[e]This criteria applies to the internal standards but is only evaluated for the continuing calibration check.

SOURCE: SW-846, Update I and Update II

TABLE E.4-9c
Summary of Laboratory Quality Control Procedures
by Analytical Method

- Metals Except Mercury

EPA SW-846 Analytical Method	Quality Control Check	Frequency	Acceptance Criteria	Corrective Action
6010A	Initial Calibration	Daily (3 standards)		
	Calibration Verification	Daily after initial calibration	± 5% of initial	Recalibrate
	Continuing Calibration	Every 10 samples and end of the analytical run	± 10% of expected value	Recalibrate
	Calibration Blank	Every 10 samples, at end of analytical run, and at initial calibration	± 3 SD of mean blank values	Repeat, average result, or recalibrate
	Reagent Blank (also called preparation blank)	One per preparation sample batch	< CRQL[a]	Redigest and reanalyze
	Instrument Check Standard	Every 10 samples	± 10% of expected value	Fluid problem, reanalyze previous samples
	Interference Check Standard	Beginning and end of analytical run	± 20% of true value	Correct problem
	Serial Dilution	One per field batch per matrix	± 10% of original determination	Flag data
	Replicates/Duplicates	One per analytical run	Per method or contract requirements	Flag data
	Matrix Spike	Per method and contract requirements	± 25% of known value	Flag data

TABLE E.4-9c

Summary of Laboratory Quality Control Procedures
by Analytical Method

Metals Except Mercury
(Continued)

EPA SW-846 Analytical Method	Quality Control Check	Frequency	Acceptance Criteria	Corrective Action
6010A (Continued)	Spiked replicate	Per method or contract requirements	± 20% of actual value	Flag data

*CRQL = Contract required quantitation limit

SOURCE: SW-846, Update I and Update II

TABLE E.4-9d

Summary of Laboratory Quality Control Procedures
by Analytical Method

Metals

EPA SW-846 Analytical Method	Quality Control Check	Frequency	Acceptance Criteria	Corrective Action
All 7000 and 7000A Methods	Initial Calibration	Daily (3 standards)		
	Calibration Verification	Daily after initial calibration	± 10% of true value	Recalibrate
	Continuing Calibration	Every 10 Samples	± 20% or true value	Recalibrate and reanalyze samples
	Calibration Blanks	Every 10 samples, at end of analytical run, and initial calibration	± 3 SD of mean blank values	Repeat, average, recalibrate if necessary
	Reagent Blank (also called preparation blank)	One per preparation sample batch	< CRQL[a]	Redigest and reanalyze
	Laboratory Control Sample (LCS)	One per analytical batch	± 20% of true value	Correct problem, redigest, and reanalyze all samples from last LCS
	Interference Check Standard	One per analytical batch	± 10% difference between undiluted and 5X diluted per method	Per method
	Matrix Spike	Every analytical batch	Per method	Flag data
	Serial Dilution	One per field batch per matrix	± 10% of original determination	Flag data

TABLE E.4-9d

Summary of Laboratory Quality Control Procedures
by Analytical Method

Metals
(Continued)

EPA SW-846 Analytical Method	Quality Control Check	Frequency	Acceptance Criteria	Corrective Action
All 7000 and 7000A Methods (Continued)	Matrix Spike Duplicate	Every analytical batch	RPD[b] < 20%	Flag data
	Method of Standard Additions	When needed for problem matrices	Per method	Per method

[a]CRQL = Contract required quantitation limit
[b]RPD = Relative percent difference

SOURCE: SW-846, Update I and Update II

TABLE E.4-9e

Summary of Laboratory Quality Control Procedures
by Analytical Method

TCLP

EPA SW-846 Analytical Method	Quality Control Check	Frequency	Acceptance Criteria	Corrective Action
1311	Extraction fluid blank	Every 20 extractions conducted in an extraction vessel	Per analytical method	Per analytical method
	Matrix	Each analytical batch	Per analytical method	Per analytical method

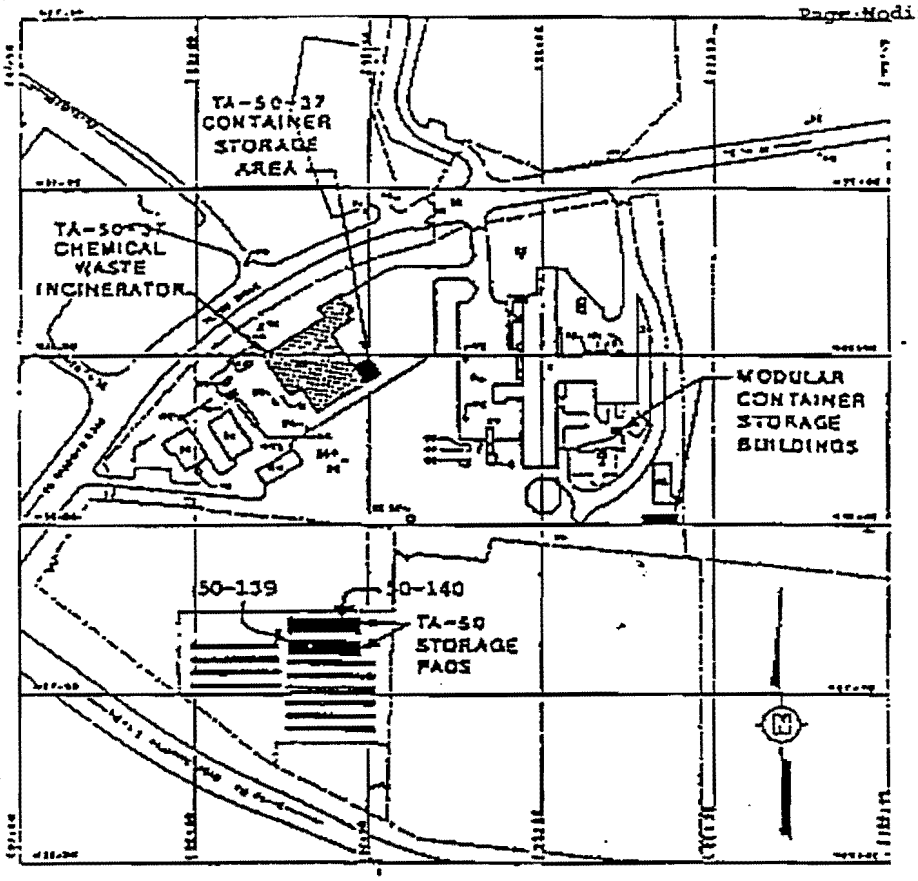

FIGURE 4

LOCATIONS OF TA-50
CHEMICAL WASTE INCINERATOR
AND CONTAINER STORAGE
UNITS

PREPARED FOR

LOS ALAMOS
NATIONAL LABORATORY
LOS ALAMOS, NEW MEXICO

INTERNATIONAL
TECHNOLOGY
CORPORATION

© 1994 IT CORPORATION
ALL COPYRIGHTS RESERVED

FIGURE E.4-1

Locations of TA-50 Chemical Waste Incinerator
and Container Storage Units

OFFICIAL SAMPLE SEAL

Collected by_____ Collector's Sample No._____
(Signature)

Date Collected_____ Time Collected_____

Place Collected_____
_____

_____

FIGURE E.4-2

Example of Sample Seal

OFFICIAL SAMPLE LABEL

Collected_____ Collector's Sample No._____

Place of Collection_____
_____

_____
_____

Date Sampled_____ Time Sampled_____

_____

FIGURE E.4-3

Example of Sample Label

Hazardous Materials
Collector's Sample No._____

Location of Sampling: ____Producer ____Hauler
____Disposal Site
____Other:_____

_____

Company's Name_____ Telephone(__)_____

Address_____
number street city state zip

Collector's Name_____ Telephone(__)_____

Date Sampled_____ Time Sampled_____hours

Type of Process Producing Waste_____

Waste Type Code_____ Other_____

Field Information_____

_____

_____

Sample Allocation:

1. _____
name of organization

2. _____
name of organization

3. _____
name of organization

Chain of Possession

1. _____ _____ _____
signature title inclusive dates

2. _____ _____ _____
signature title inclusive dates

FIGURE E.4-4

Chain of Custody Record

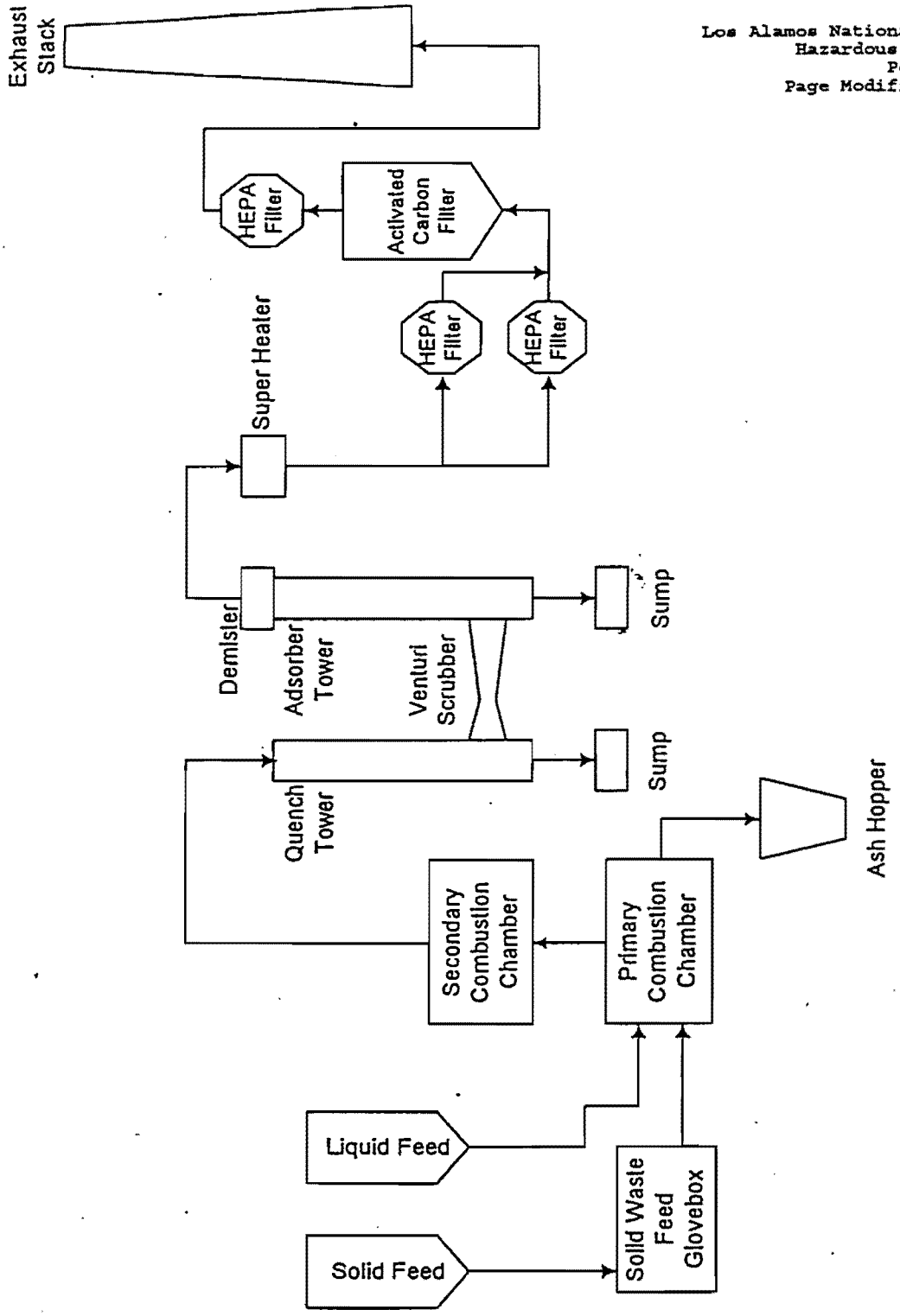

Figure E.4-5
Principal Treatment Components
of the Controlled Air Incinerator

APPENDIX 1

Regulatory Evaluation of Controlled-Air Incinerator Feeds

Appendix 1
Regulatory Evaluation of
Controlled-Air Incinerator Feeds

Run No. (Date)	Feed Description	Radioactive	Percent of Feed	Hazardous	Rationale
1 (05/15/78)	No Feed (equipment checkout)	No	100	No	No waste feed used in burn.
1R (05/19/78)	cellulose (shredded paper)	No	100	No	Processed material used to test equipment. Not a waste.
2 (06/28/78)	No Feed (equipment checkout)	No	100	No	No waste feed used in burn.
3 (07/31/78)	Feed Type I: cellulose (shredded paper)	No	100	No	Processed material used to determine burn efficiency. Not a waste.
	Feed Type II: cellulose polyvinyl chloride	No	100 88.0 12.0	No	Formulated mixture used to determine burn efficiency. Not a waste.
	Feed Type III: cellulose polyvinyl chloride	No	100 75.0 25.0	No	Formulated mixture used to determine burn efficiency. Not a waste.
	Feed Type IV: cellulose polyethylene	No	100 88.0 12.0	No	Formulated mixture used to determine burn efficiency. Not a waste.
4 (09/05/78)	No Feed	No	100	No	No waste feed used in burn.
4R (09/26/78)	Feed Type I: paper polyvinyl chloride	No	100 70.0 30.0	No	Formulated mixture used to determine burn efficiency. Not a waste.
	Feed Type II: paper polyvinyl chloride	No	100 50.0 50.0	No	Formulated mixture used to determine burn efficiency. Not a waste.

Appendix 1
Regulatory Evaluation of
Controlled-Air Incinerator Feeds
(Continued)

Run No. (Date)	Feed Description	Radioactive	Percent of Feed	Hazardous	Rationale
	Feed Type III: paper polyethylene	No	100 70.0 30.0	No	Formulated mixture used to determine burn efficiency. Not a waste.
4R (09/26/78) (Continued)	Feed Type IV: paper polyethylene	No	100 50.0 50.0	No	Formulated mixture used to determine burn efficiency. Not a waste.
	Feed Type V: paper latex	No	100 80.0 20.0	No	Formulated mixture used to determine burn efficiency. Not a waste.
5 (07/13/79)	Design-basis mixture: paper polyvinyl chloride polyethylene latex	No	100 35.0 12.0 23.0 30.0	No	Design-basis mixture used to determine burn efficiency. Not a waste.
6 (09/25/79)	Design-basis mixture: paper polyvinyl chloride polyethylene latex	No	100 35.0 12.0 23.0 30.0	No	Design-basis mixture used to determine burn efficiency. Not a waste.
7 (12/17/79)	Feed Type I: Zone II trash: cellulosics (paper, cloth) plastics (sheeting vials, tubing, bottles) metal (wire, cans) $^{239}Pu/^{241}Am$	Yes	100	No	No hazardous constituents present in waste.
	Feed Type II: empty caustic bags: paper, plastic	No	100	No	No hazardous constituents present in waste. (Caustic bags were empty.)
	Feed Type III: spent process filters polyethylene	Yes	100	No	No hazardous constituents present in waste. Process filters were from the incineration process.

Appendix 1
Regulatory Evaluation of Controlled-Air Incinerator Feeds (Continued)

Run No. (Date)	Feed Description	Radioactive	Percent of Feed	Hazardous	Rationale
8 (04/07/80)	Prepared TRU feed:	Yes	100	No	Design-basis mixture used to determine radionuclide fate. Not a waste. (Run cancelled)
	Design-basis mixture:				
	paper		35.0		
	polyvinyl chloride		12.0		
	polyethylene		23.0		
	latex		30.0		
	$^{239}Pu/^{241}Am$ solution		< 1.0		
8A (04/28/80)	Feed Type I:	Yes	100	No	Design-basis mixture used to determine radionuclide fate. Not a waste.
	Prepared TRU feed:				
	Design-basis mixture:				
	paper		35.0		
	polyvinyl chloride		12.0		
	polyethylene		23.0		
	latex		30.0		
	$^{239}Pu/^{241}Am$ solution		< 1.0		
	Feed Type II: room trash	No	100	No	No hazardous constituents present in waste. Room trash from TA-50 Building 37 used to flush incinerator.
9 (06/15/81)	Feed Type I: wood	No	100	No	Material purchased for burn to determine efficiency of wood burn. Not a waste.
	Feed Type II:	No	100	No	Pentachlorophenol used to treat wood, waste did not meet listing criteria.
	wood		> 99.0		
	pentachlorophenol		< 1.0		
10 (07/06/81)	Feed Type I:	No	100	No	Simulated waste stream used to determine burn efficiency. Not a waste.
	Design-basis mixture:				
	paper, wood		35.0		
	polyvinyl chloride		12.0		
	polyethylene		23.0		
	rubber		30.0		
10 (07/06/81) (Continued)	Feed Type II:	Yes	100	No	Simulated waste stream used to determine radionuclide fate. Not a waste.
	Design-basis mixture		> 99.0		
	^{131}I		< 1.0		

Appendix 1
Regulatory Evaluation of
Controlled-Air Incinerator Feeds
(Continued)

Run No. (Date)	Feed Description	Radioactive	Percent of Feed	Hazardous	Rationale
	Feed Type III: Design-basis mixture ^{137}Cs	Yes	100 > 99.0 < 1.0	No	Simulated waste stream used to determine radionuclide fate. Not a waste.
	Feed Type IV: Design-basis mixture ^{106}Ru	Yes	100 > 99.0 < 1.0	No	Simulated waste stream used to determine radionuclide fate. Not a waste.
	Feed Type V: Design-basis mixture ^{59}Fe	Yes	100 > 99.0 < 1.0	No	Simulated waste stream used to determine radionuclide fate. Not a waste.
	Feed Type VI: Design-basis mixture ^{60}Co	Yes	100 > 99.0 < 1.0	No	Simulated waste stream used to determine radionuclide fate. Not a waste.
	Feed Type VII: Ion-exchange resin (beaded anion)	No	100	No	Product used to determine burn efficiency. Not a waste.
	Feed Type VIII: Ion-exchange resin (beaded cation)	No	100	No	Product used to determine burn efficiency. Not a waste.
	Feed Type IX: Ion-exchange resin (powdered anion)	No	100	No	Product used to determine burn efficiency. Not a waste.
	Feed Type X: Ion-exchange resin (powdered cation)	No	100	No	Product used to determine burn efficiency. Not a waste.
11A (01/04/82)	No Feed (refractory cure)	No	100	No	No waste feed used in burn.
11 (04/05/82)	Feed Type I: polystyrene fuel oil water surfactant	No	100 10.0 45.0 45.0 < 1.0	No	Design mixture used to test liquid waste feed system. Not a waste.

Appendix 1
Regulatory Evaluation of
Controlled-Air Incinerator Feeds
(Continued)

Run No. (Date)	Feed Description	Radioactive	Percent of Feed	Hazardous	Rationale
	Feed Type II:	No	100	No	Design mixture used to test liquid waste feed system. Not a waste.
	polystyrene		30.0		
	fuel oil		35.0		
	water		35.0		
	surfactant		< 1.0		
	Feed Type III:	No	100	No	Design mixture used to test liquid waste feed system. Not a waste.
	polystyrene		50.0		
	fuel oil		25.0		
	water		25.0		
	surfactant		< 1.0		
12 (05/10/82)	No Feed (equipment checkout)	No	100	No	No waste feed used in burn.
13 (06/13/82)	TSCA trial burn	No		No	Design mixture used to prove PCB destruction for TSCA. Not a RCRA waste.
	Feed Type I:		100		
	Arachlor 1260		25.0		
	trichlorobenzene		75.0		
	Feed Type II:	No	100	No	Design mixture used to prove PCB destruction for TSCA. Not a RCRA waste.
	Arachlor 1260		61.0		
	trichlorobenzene		39.0		
14 (08/15/82)	Feed Type I:	No	100	No	Design mixture used as background for radionuclide study. Not a waste.
	Design-basis feed:				
	paper, wood		35.0		
	polyvinyl chloride		12.0		
	polyethylene		23.0		
	rubber		30.0		
14 (08/15/82) (Continued)	Feed Type II:	Yes	100	No	Simulated waste stream used to determine radionuclide fate. Not a waste.
	Design-basis mixture		> 99.0		
	^{131}I		< 1.0		
	Feed Type III:	Yes	100	No	Simulated waste stream used to determine radionuclide fate. Not a waste.
	Design-basis mixture		> 99.0		
	^{137}Cs		< 1.0		
	Feed Type IV:	Yes	100	No	Simulated waste stream used to determine radionuclide fate. Not a waste.
	Design-basis mixture		> 99.0		
	^{104}Ru		< 1.0		

Appendix 1
Regulatory Evaluation of Controlled-Air Incinerator Feeds (Continued)

Run No. (Date)	Feed Description	Radioactive	Percent of Feed	Hazardous	Rationale
	Feed Type V: Design-basis mixture ^{59}Fe	Yes	100 > 99.0 < 1.0	No	Simulated waste stream used to determine radionuclide fate. Not a waste.
	Feed Type VI: Design-basis mixture ^{60}Co	Yes	100 > 99.0 < 1.0	No	Simulated waste stream used to determine radionuclide fate. Not a waste.
15 (03/14/83)	No Feed	No	100	No	No waste feed used in burn.
16A (06/27/83)	Equipment checkout Red Smoke, Mk 2: 1- methylaminoanthraquin one potassium chlorate sugar water fuel oil surfactant	No	100 9.4 3.5 2.3 69.0 15.8 < 1.0	No	Product used to develop feed process. Not a RCRA waste.
16B (07/25/83)	Equipment checkout Red Smoke, Mk 2: 1- methylaminoanthraquin one potassium chlorate sugar water fuel oil surfactant	No	100 9.4 3.5 2.3 69.0 15.8 < 1.0	No	Product used to develop feed process. Not a RCRA waste.

Appendix 1
Regulatory Evaluation of Controlled-Air Incinerator Feeds
(Continued)

Run No. (Date)	Feed Description	Radioactive	Percent of Feed	Hazardous	Rationale
16C (08/03/83)	Equipment checkout Red Smoke, Mk 2:	No	100	No	Product used to develop feed process. Not a RCRA waste.
	1-methylaminoanthraquinone		9.4		
	potassium chlorate		3.5		
	sugar		2.3		
	water		69.0		
	fuel oil		15.8		
	surfactant		< 1.0		
16D (08/17/83)	Equipment checkout Red Smoke, Mk 2:	No	100	No	Product used to develop feed process. Not a RCRA waste.
	1-methylaminoanthraquinone		9.4		
	potassium chlorate		3.5		
	sugar		2.3		
	water		69.0		
	fuel oil		15.8		
	surfactant		< 1.0		
16 (09/08/83)	Smoke, Mk 66:	No	100	No	Product used for treatability testing of smokes. Not a RCRA waste.
	1-methylaminoanthraquinone		5.8		
	potassium chlorate		4.2		
	sugar		2.8		
	sodium bicarbonate		1.0		
	diatomaceous earth		1.2		
	binder		< 1.0		
	water		69.0		
	fuel oil		15.8		
	surfactant		< 1.0		

Appendix 1
Regulatory Evaluation of Controlled-Air Incinerator Feeds (Continued)

Run No. (Date)	Feed Description	Radioactive	Percent of Feed	Hazardous	Rationale
	Smoke, Mk 22:	No	100	No	Product used for treatability testing of smokes. Not a RCRA waste.
	3,4,8,9-		4.6		
	dibenzopyrene-5,10-		2.8		
	quinone		3.8		
	1,9-benz-10-anthrone		2.8		
	potassium chlorate		< 1.0		
	sugar		< 1.0		
	sodium bicarbonate		< 1.0		
	diatomaceous earth		69.0		
	silica		15.8		
	water		< 1.0		
	fuel oil				
	surfactant				
	Smoke, Mk 23:	No	100	No	Product used for treatability testing of smokes. Not a RCRA waste.
	1,4-di-p-		4.7		
	toludinoanthraquinone		1.0		
	3,4,8,9-		1.0		
	dibenzopyrene-5,10-		4.3		
	quinone		3.5		
	1,9-benz-10-anthrone		< 1.0		
	potassium chlorate		< 1.0		
	sugar		69.0		
	sodium bicarbonate		15.8		
	diatomaceous earth		< 1.0		
	water				
	fuel oil				
	surfactant				

Appendix 1
Regulatory Evaluation of Controlled-Air Incinerator Feeds
(Continued)

Run No. (Date)	Feed Description	Radioactive	Percent of Feed	Hazardous	Rationale
16 (09/08/83) (Continued)	Smoke, Mk 13:	No	100	No	Product used for treatability testing of smokes. Not a RCRA waste.
	1-methylaminoanthraquinone		2.3		
	xylene-azo-b-naphthol		6.8		
	potassium chlorate		2.9		
	sugar		2.2		
	silica		1.0		
	graphite		< 1.0		
	water		69.0		
	fuel oil		15.8		
	surfactant		< 1.0		
	Red Smoke, Mk 2:	No	100	No	Product used for treatability testing of smokes. Not a RCRA waste.
	1-methylaminoanthraquinone		9.4		
	potassium chlorate		3.5		
	sugar		2.3		
	water		69.0		
	fuel oil		15.8		
	surfactant		< 1.0		
	Smoke, Mk 21:	No	100	No	Product used for treatability testing of smokes. Not a RCRA waste.
	1-methylaminoanthraquinone		6.1		
	potassium chlorate		3.8		
	sugar		2.8		
	sodium bicarbonate		< 1.0		
	diatomaceous earth		1.6		
	binder		< 1.0		
	water		69.0		
	fuel oil		15.8		
	surfactant		< 1.0		

Appendix 1
Regulatory Evaluation of Controlled-Air Incinerator Feeds (Continued)

Run No. (Date)	Feed Description	Radioactive	Percent of Feed	Hazardous	Rationale
16 (09/08/83) (Continued)	Smoke, Mk 89:	No	100	No	Product used for treatability testing of smokes. Not a RCRA waste.
	1,4-di-p-toludinoanthraquinone		5.0		
	auramine		2.1		
	hydrochloride		3.8		
	potassium chlorate		3.1		
	sugar		1.0		
	sodium bicarbonate		< 1.0		
	silica		69.0		
	water		15.8		
	fuel oil		< 1.0		
	surfactant				
	Smoke, Mk 116:	No	100	No	Product used for treatability testing of smokes. Not a RCRA waste.
	1,4-di-p-toludinoanthraquinone		5.0		
	1,9-benz-10-anthrone		1.4		
	3,4,8,9-dibenzopyrene-5,10-quinone		1.0		
	potassium chlorate		3.5		
	sugar		3.4		
	sodium bicarbonate		1.0		
	silica		< 1.0		
	water		69.0		
	fuel oil		15.8		
	surfactant		< 1.0		

Appendix 1
Regulatory Evaluation of Controlled-Air Incinerator Feeds (Continued)

Run No. (Date)	Feed Description	Radioactive	Percent of Feed	Hazardous	Rationale
16 (09/08/83) (Continued)	Green Smoke, Mk 117:	No	100	No	Product used for treatability testing of smokes. Not a RCRA waste.
	1,4-di-p-		4.0		
	toludinoanthraquinone		1.1		
	benzanthrone dye		1.0		
	dibenzo(b,d,f)chrysen		< 1.0		
	e-7,14-di		3.1		
	3,4,8,9-dibenzopyrene		2.1		
	potassium chlorate		1.0		
	sugar		1.0		
	sodium bicarbonate		2.9		
	diatomaceous earth		69.0		
	binder		15.8		
	water		< 1.0		
	fuel oil				
	surfactant				
17A (04/09/84)	Equipment checkout	No		No	Product used for treatability testing of smokes. Not a RCRA waste.
	Red Smoke III:		100		
	1,n-		5.1		
	methylaminoanthraquin		1.0		
	one		< 1.0		
	dextrin		3.8		
	nitrocellulose		4.0		
	sodium bicarbonate		1.4		
	potassium chlorate		< 1.0		
	sulphur		69.0		
	corn starch		15.8		
	water		< 1.0		
	fuel oil				
	surfactant				

Appendix 1
Regulatory Evaluation of Controlled-Air Incinerator Feeds (Continued)

Run No. (Date)	Feed Description	Radioactive	Percent of Feed	Hazardous	Rationale
17 (04/23/84)	Violet Smoke IV:	No	100	No	Product used for treatability testing of smokes. Not a RCRA waste.
	1,4-diamino-2,3-		8.3		
	dihydrianthraquinone		2.1		
	1,n-		6.0		
	methylaminoanthraquin		6.2		
	one		2.2		
	sodium bicarbonate		< 1.0		
	potassium chlorate		50.0		
	sulphur		25.0		
	starch		< 1.0		
	water				
	fuel oil				
	surfactant				
	Red Smoke III:	No	100	No	Product used for treatability testing of smokes. Not a RCRA waste.
	1,n-		8.4		
	methylaminoanthraquin		1.5		
	one		< 1.0		
	dextrin		6.3		
	nitrocellulose		6.5		
	sodium bicarbonate		2.2		
	potassium chlorate		< 1.0		
	sulphur		50.0		
	corn starch		25.0		
	water		< 1.0		
	fuel oil				
	surfactant				

Appendix 1
Regulatory Evaluation of Controlled-Air Incinerator Feeds (Continued)

Run No. (Date)	Feed Description	Radioactive	Percent of Feed	Hazardous	Rationale
17 (04/23/84) (Continued)	Green Smoke IV:	No	100	No	Product used for treatability testing of smokes. Not a RCRA waste.
	1,4-di-p-		7.0		
	toludinoanthraquinone		1.0		
	dibenzo(b,d,f)chrysen		< 1.0		
	e-7,14-di		5.7		
	3,4,8,9-dibenzopyrene		6.7		
	sodium bicarbonate		2.6		
	potassium chlorate		2.0		
	sulphur		< 1.0		
	benzanthrone		< 1.0		
	corn starch		< 1.0		
	nitrocellulose		50.0		
	dextrin		25.0		
	water		< 1.0		
	fuel oil				
	surfactant				
	Yellow Smoke IV:	No	100	No	Product used for treatability testing of smokes. Not a RCRA waste.
	dibenzo(b,d,f)chrysen		2.8		
	e-7,14-di		< 1.0		
	3,4,8,9-dibenzopyrene		8.3		
	sodium bicarbonate		5.0		
	potassium chlorate		2.1		
	sulphur		6.1		
	benzanthrone		< 1.0		
	corn starch		< 1.0		
	dextrin		50.0		
	water		25.0		
	fuel oil		< 1.0		
	surfactant				

Appendix 1
Regulatory Evaluation of Controlled-Air Incinerator Feeds (Continued)

Run No. (Date)	Feed Description	Radioactive	Percent of Feed	Hazardous	Rationale
17 (04/23/84) (Continued)	Green Smoke VII:	No	100	No	Product used for treatability testing of smokes. Not a RCRA waste.
	1,4-di-p-		7.3		
	toludinoanthraquinone		3.1		
	2-(2'-quinolyl)-1,3-		6.1		
	indadione		4.3		
	potassium chlorate		4.1		
	magnesium carbonate		< 1.0		
	sugar		< 1.0		
	sodium bicarbonate		< 1.0		
	sulphur		< 1.0		
	corn starch		50.0		
	nitrocellulose		25.0		
	water		< 1.0		
	fuel oil				
	surfactant				
	Yellow Smoke XII:	No	100	No	Product used for treatability testing of smokes. Not a RCRA waste.
	2-(2'-quinolyl)-1,3-		10.6		
	indadione		5.5		
	potassium chlorate		5.3		
	magnesium carbonate		3.8		
	sugar		< 1.0		
	sodium bicarbonate		< 1.0		
	sulphur		< 1.0		
	corn starch		50.0		
	water		25.0		
	fuel oil		< 1.0		
	surfactant				
	White Smoke I:	No	100	No	Product used for treatability testing of smokes. Not a RCRA waste.
	hexachloroethane		11.1		
	zinc oxide		11.6		
	aluminum		2.3		
	water		50.0		
	fuel oil		25.0		
	surfactant		< 1.0		

Appendix 1
Regulatory Evaluation of Controlled-Air Incinerator Feeds (Continued)

Run No. (Date)	Feed Description	Radioactive	Percent of Feed	Hazardous	Rationale
17 (04/23/84) (Continued)	Residual Smoke Mixture	No	100	No	Product used for treatability testing of smokes. Not a RCRA waste.
	residual smokes		25.0		
	water		50.0		
	fuel oil		25.0		
	surfactant		< 1.0		
18 (06/18/84)	Feed Type I:	No	100	No	Pentachlorophenol used to treat wood, waste did not meet listing criteria.
	wood		> 99.0		
	pentachlorophenol		< 1.0		
	Feed Type II:	No	100	No	Unused PPE burned to flush system. Not a waste.
	polyvinyl chloride				
P-1 (09/06/84)	Feed Type I:	Yes	100	No	Waste did not contain any RCRA regulated hazardous constituents.
	transformer oil:				
	Arachlor 1254		33.3		
	Arachlor 1260		19.2		
	trichlorobenzene		46.5		
	Pu/Am		< 1.0		
19B (05/15/85)	No Feed (equipment checkout)	No	100	No	No waste feed used in burn.
19A (06/03/85)	No Feed (equipment checkout)	No	100	No	No waste feed used in burn.
19 (09/10/85)	Red Flare, Mk 13:	No	100	No	Product used for treatability testing of flares. Not a RCRA waste.
	potassium chlorate		3.8		
	strontium nitrate		11.3		
	magnesium		5.1		
	hexachlorobenzene		3.0		
	asphaltum		1.8		
	linseed/castor oil		< 1.0		
	water		50.0		
	fuel oil		25.0		
	surfactant		< 1.0		

Appendix 1
Regulatory Evaluation of Controlled-Air Incinerator Feeds (Continued)

Run No. (Date)	Feed Description	Radioactive	Percent of Feed	Hazardous	Rationale
	Yellow Flare, Mk 1:	No	100	No	Product used for treatability testing of flares. Not a RCRA waste.
	potassium perchlorate		13.0		
	magnesium		3.8		
	sodium oxalate		2.5		
	hexachlorobenzene		2.0		
	asphaltum		2.2		
	dextrin/linseed/casto		1.5		
	r oil		50.0		
	water		25.0		
	fuel oil		< 1.0		
	surfactant				
	Green Star Charge:	No	100	No	Product used for treatability testing of flares. Not a RCRA waste.
	barium chlorate		12.5		
	barium nitrate		10.0		
	orange shellac		1.3		
	red gum		1.2		
	alcohol/gum arabic		< 1.0		
	water		50.0		
	fuel oil		25.0		
	surfactant		< 1.0		
20 (12/09/85)	No Feed (refractory cure)	No	100	No	No waste feed used in burn.
21A (08/06/86)	Equipment checkout	No		No	Design mixture used to determine burn efficiency for RCRA Permit. Not a waste.
	Feed Type I:		100		
	carbon tetrachloride		40.0		
	trichloroethane		20.0		
	fuel oil		35.0		
	aluminum stearate		5.0		
	Feed Type II:	No	100	No	Design mixture used to determine burn efficiency for RCRA Permit. Not a waste.
	carbon tetrachloride		30.0		
	trichloroethane		15.0		
	water		4.1		
	cellulose		41.3		
	polyethylene		9.6		

Appendix 1
Regulatory Evaluation of Controlled-Air Incinerator Feeds (Continued)

Run No. (Date)	Feed Description	Radioactive	Percent of Feed	Hazardous	Rationale
21 (09/04/86)	RCRA Trial Burn	No		No	Design mixture used to determine burn efficiency for RCRA Permit. Not a waste.
	Feed Type I:		100		
	carbon tetrachloride		45.0		
	trichloroethane		20.0		
	fuel oil		35.0		
	aluminum stearate		< 1.0		
	Feed Type II:	No	100	No	Design mixture used to determine burn efficiency for RCRA Permit. Not a waste.
	carbon tetrachloride		30.0		
	trichloroethane		15.0		
	water		4.1		
	cellulose		41.3		
	polyethylene		9.6		
22 (09/23/86)	Feed Type I:	Yes	100	No	Waste did not contain any hazardous constituents.
	TRU Waste (TA-55)				
	cellulosics				
	plastics				
	$^{239}Pu/^{241}Am$				
23 (03/24/87)	TRU Waste	No	100	No	Waste did not contain any hazardous constituents.
	Feed Type I:				
	packaging trash (paper, plastic)				
	Feed Type II:	Yes	100	Yes	Waste did not contain listed constituents. Trimethylbenzene is characteristic for ignitability. Incineration meets the treatment standard specified at 40 CFR Part 268 Appendix VI.
	vial packages:				
	cellulose		60.0		
	polyethylene		18.5		
	water		2.5		
	trimethylbenzene		19.0		
	beta emitters		< 1.0		

Appendix B

Sampling and QA/QC Plan for Closure

SAMPLING, QUALITY ASSURANCE & QUALITY CONTROL PLAN

FOR HAZARDOUS CONSTITUENTS AND PCBs

DURING CLOSURE OF THE CONTROLLED AIR INCINERATOR

Prepared By

Ron Conrad, Ph. D.
Waste Site Studies Team
Hazardous & Solid Waste Group (ESH-19)
Environment, Safety & Health Division
Los Alamos National Laboratory
Los Alamos, New Mexico

June 14, 1996

Los Alamos National Laboratory

Sampling, Quality Assurance & Quality Control Plan for Hazardous Constituents and PCBs During Closure of the Controlled Air Incinerator

Reviewed and approved by:

Ron Conrad
Signature

Ron Conrad, Ph.D.
Waste Site Studies Team
Hazardous & Solid Waste (ESH-19)
Environment, Safety & Health Division

6/17/96
Date

Jack Ellvinger
Signature

Jack Ellvinger
Team Leader, Permitting Team
Hazardous & Solid Waste (ESH-19)
Environment, Safety & Health Division

6/17/96
Date

Kenneth M. Hargis
Signature

Kenneth M. Hargis
Manager of Operations
Waste Management Program Office
Environmental Management Programs

6/17/96
Date

I. INTRODUCTION

The Hazardous and Solid Waste Group (ESH-19) of the Environment, Safety, and Health Division has been tasked by the Waste Management Program Office to perform sampling for hazardous constituents and polychlorinated biphenyls (PCBs) as part of the closure/decommissioning of the Controlled Air Incinerator (CAI) located inside Building 37, Technical Area 50 at the Los Alamos National Laboratory (LANL), Los Alamos, New Mexico. The purpose of the sampling of the CAI is to determine the presence of (1) hazardous contamination as regulated under the Resource Conservation and Recovery Act (RCRA) and as required by the New Mexico Environment Department (NMED) in an amended closure plan[1] under the LANL Hazardous Waste Facility Permit; and (2) contamination by PCBs as required by the US Environmental Protection Agency (EPA) in a letter[2] that terminated approval to dispose of PCBs in the CAI under the Toxic Substances Control Act (TSCA) and required closure under a closure/decontamination plan provided to EPA in a letter[3] from the US Department of Energy.

The closure plans (called the RCRA and TSCA Closure Plans) define the sampling and analytical methodology to be used during the closure activities. The purpose of this plan is to provide additional detail on the specific sampling and quality assurance/quality control (QA/QC) procedures that will be used during the RCRA and TSCA closure activities. This plan serves as the QA/QC plan required by Section E.4.10 of the RCRA Closure Plan.

Radiological surveys and sampling are also being carried out during decommissioning of the CAI,[4] but this work is not being carried out by Group ESH-19 and is not addressed in this plan.

Background

The original CAI was installed in 1977 and first operated in 1978. The CAI was initially used as a research and development (R&D) tool to prove the viability of incineration as a treatment method for transuranic (TRU) radioactive waste, and was then used for further research on the capability of incinerators to break the chemical bonds of certain persistent chemicals. These chemicals included simulated and actual hazardous wastes and PCBs.

Between May 1978 and March 1987, a total of 36 campaigns (period of use of the CAI for a specific purpose or material type) were conducted. The CAI campaigns included equipment checks, treatability studies, efficiency studies, a PCB trial burn, incineration of PCB contaminated materials, a hazardous waste trial burn, incineration of ignitable hazardous waste, and burns of TRU wastes. Eight of the 36 CAI campaigns involved radioactive components.

These campaigns demonstrated that the CAI was very effective at treating radioactive materials, PCBs, and hazardous wastes. LANL received approval from the EPA under TSCA to incinerate PCBs in the CAI in 1983, with reapproval in 1992. Modifications (upgrades) to the CAI system were conducted after R&D testing ended in 1987, and the CAI was permitted by the New Mexico Environmental Improvement Division (now called the New Mexico Environment Department, NMED) to incinerate RCRA regulated waste in 1989. Additional modifications have been made to the CAI since the permit was issued to replace equipment due to normal wear (during the R&D campaigns) or to upgrade existing equipment for routine operations.

The CAI has never operated since the R&D testing ended in 1987. Since that time, efforts have focused on making modifications to the CAI for routine treatment of wastes, and in attempting to obtain all regulatory approvals and public acceptance of its operation. Because of projected costs and uncertainty regarding the operation of the CAI, decisions were made in 1995 to discontinue funding and to conduct regulatory closure of the CAI. Closure activities will be conducted concurrent with the dismantlement and removal of the CAI from the site. CAI components will also be sampled and surveyed to identify the presence of radiological contamination. Decontamination activities will be conducted to support reuse and reclamation of equipment associated with the CAI to the extent practicable.

Summary of Task

The RCRA and TSCA closures of the CAI are scheduled to commence in June 1996. Sampling and analysis for RCRA and TSCA constituents will be conducted within the main components of the CAI to verify that these constituents are not present, or to determine the need for decontamination or management of CAI equipment as hazardous/chemical waste. If decontamination is required for RCRA and/or TSCA constituents, sampling will also be conducted to verify the success of the decontamination activities during CAI closure.

The sampling locations on the interior surfaces of the CAI components will be selected so that the samples taken are representative of potential constituent contamination of that component. Because much of the sampling will occur before the dismantlement process begins, ports, flanges, and other access openings will serve as the entry to the interior of many components. Professional judgment and knowledge of the CAI operations indicates that these access locations will allow representative sampling. Access to some components may be limited (e.g. the hearth of the combustion chamber, the ash collection hopper), and sampling of such components will occur during dismantlement.

The ESH-19 Waste Site Studies Team will collect the samples according to procedures that meet the requirements of the EPA's *Test Methods for Evaluating Solid Waste Physical/Chemical Methods* (SW-846),[5] submit the samples to the LANL Environmental Restoration Project Sample Management Office (a qualified outside commercial laboratory will analyze the samples), receive the data back (verbally) within a 5-day turnaround time, and summarize the data for the regulatory personnel in ESH-19. The closure sampling will also be conducted consistent with the LANL Environmental Restoration Project *Quality Assurance Project Plan Requirements for Sampling and Analysis,*[6] Chapter B, "Measurements/Data Acquisition.", and Chapter D, "Assessment/Oversight/Data Validation," or modification.

Samples will be analyzed for RCRA and TSCA constituents as specified in the closure plans by a qualified commercial analytical laboratory. RCRA constituents will consist of volatile organic compounds (VOCs), semivolatile organic compounds (SVOCs), total metals, and total cyanides (total CN). TSCA constituents to be analyzed consist of PCBs. The analytical laboratory will operate under a Quality Assurance and Quality Control Plan that has been approved for SW-846 methods and EPA Contract Laboratory Procedures through the LANL Environmental Restoration Project specifications for contract analytical support laboratories.[7]

The different sets of analytes will be determined by EPA SW-846 methods. These include:

VOCs Method 8240, 8260 or modification.
SVOCs Method 8270 or modification
Total metals (Method 3050 extraction plus appropriate Method 6000 or 7000x series (ICAP or AA) analytical technique)
Total CN (Method 9010A or modification)
PCBs (Method 8080 or modification)

After the results of the sampling are received in hard copy, spreadsheets will be prepared presenting the data, and a brief report summarizing the sampling techniques used and any other pertinent details regarding the sampling will be prepared. A copy of all documentation for the closure sampling (e.g. analytical and survey results, correspondence, sample collection logs, plans, photographs, and procedures) will be provided in a timely manner to the independent Professional Engineer who will oversee the closure activities.

Responsibilities

The responsibilities of those involved in the RCRA and TSCA closure sample/analysis activities are presented below. Responsibilities of those involved in other aspects of the CAI decommissioning are defined in the Decommissioning Management Plan for the Controlled Air Incinerator.[4]

Project Leader. Ken Hargis of the Waste Management Program Office is the LANL project manager with overall responsibility and accountability for completing the closure/decommissioning project.

Field Team Leader. Ron Conrad of ESH-19 is the field team leader and primary person who will collect samples for the closure sampling. He will organize and direct the field team's efforts and is responsible to ensure that all sampling is performed in conformance with the RCRA and TSCA closure plans, as well as with this plan. He will report all problems or recommendations to the project leader, although he has full authority to make field changes in the sampling that will enhance the success of the project. He will ensure that the team complies with all site requirements (including training), and complies with the *Site Specific Health & Safety Plan for Decommissioning of the CAI.*[8]

Field Team Members. Albert Dye, Kallie Firestone, and Marquis Childs are the field team members for the closure sampling. They will participate in sampling, document the sampling events, take photographs, and assist in other ways as needed.

Sample Management Office Contact. Samples collected in the closure sampling will be submitted to a qualified commercial analytical laboratory through the LANL Environmental Restoration Project Sample Management Office. John Miglio is the contact for the Sample Management Office, and can be reached at 665-7461 or Pager 104-1967.

Analytical Laboratory Contact. Samples collected in the closure sampling will be analyzed by Paragon Analytics, Inc. located in Fort Collins, Colorado. Steve Fry is the contact for Paragon Analytics, and can be reached at (800)443-1511 or (970)490-1511.

Independent Professional Engineer. An independent Professional Engineer will be contracted to oversee all RCRA and TSCA closure activities and prepare certification reports that will be submitted to EPA and NMED upon completion of all closure activities.

II. SAMPLING PROCEDURES

Four types of samples may be collected during the RCRA and TSCA closure sampling. These consist of (1) swipe samples of the interior of each of the major system components of the CAI; (2) a bulk sample of solid material collected from the floor of the primary combustion chamber of the CAI; (3) samples of wash water used in the decontamination of any CAI components; and (4) bulk samples of materials that will be disposed as wastes during the closure/decommissioning of the CAI. The latter samples will include a sample of each type of refractory in the CAI and a sample of carbon from the activated carbon adsorber unit.

All sampling activities will be conducted in a manner to prevent cross contamination and preserve the integrity of the samples. Sampling equipment will be dedicated to the sample or decontaminated between samples. No decontamination of sampling equipment will occur in the field. Latex gloves will be changed between samples and sample containers will be kept closed except during transfer of the sample. Sampling team personnel will be approved by the ESH-19 Field Team Leader to ensure proper training and qualification.

Components of the CAI that will be sampled consist of the solid waste feed glovebox , liquid waste feed tanks, glove box and elevator surrounding the ram charger mechanism , combustion chamber, quenching tower, scrubber water tanks, absorption tower, HEPA filter bank, activated carbon adsorber, exhaust stack, and the ash dropout hopper. Five swipe samples for all hazardous constituents and PCBs will be collected in the solid waste feed glovebox. Results from these samples will constitute the control or background data for comparison to results from all other CAI process components. Three swipe samples for all hazardous constituents and PCBs will be collected from each of the other CAI components, except the combustion chamber. A single composite bulk sample of solid material will be collected from the floor of the primary combustion chamber. The actual sampling locations within each component will be approved by an individual working under the supervision of the independent Professional Engineer who will oversee the closure sampling and prepare the closure certification reports.

For each discrete sample to be collected, a sample collection log will be prepared that describes the following, as a minimum:

- Purpose of sampling
- Location of sampling (CAI component name and location)
- Name and address of person(s) making log entry
- Type of sampling process
- Number and volume of sample
- Description of each sampling location, sampling methodology, equipment used, etc
- Date and time of sample collection
- Sample destination and transporter's name (name of laboratory, United Parcel Service, etc.)
- Diagram or photograph of the sampling location, if any
- Field observations, if an (pH, flammability, conductivity, explosivity, etc.
- Collector's sample identification number(s), and
- Signature of person(s) responsible for the log entry

Because sampling situations vary widely, no specific rule can be given as to the extent of information that will be entered in the log book. Sufficient information will be recorded so that the sampling situation can be reconstructed without relying on the collector's memory. A Polaroid photo will also be taken of each sampling location. The CAI component that is sampled will be marked with a number on the outside of the portion of the component that is sampled using a code based on the CAI component being sampled, as shown in a table presented in Attachment A that summarizes samples planned for the CAI. This number will also be recorded on the sample collection log (example shown as Attachment B). ESH-19 personnel will make all entries on all records with indelible, blue or black ink. All entries will be legible, consistent, direct, and succinct. ESH-19 personnel will ensure that records are identifiable, retrievable, and protected against damage and loss.

All samples will be routinely managed according to modified EPA National Enforcement Investigations Center (NEIC) chain-of-custody (COC) procedures,[9] and ESH-19 Chain of Custody/Request for Analysis forms (Attachment C) will be used. Sample labels will be prepared before sampling with as much information as possible completed before going out to the field for sampling. Attachment D shows examples of the sample labels that will be used for each sampling location. Sample containers will be sealed with a COC seal attached to the container in such a way that the seal will be broken in order to open the container. The COC record is necessary to trace sample possession from the time of collection and will accompany each sample.

Surveys of the internal surfaces of the CAI components show contamination by radioactive materials in some locations. All samples collected from the CAI will be surveyed by the LANL Health Physics personnel that are supporting the CAI decommissioning project to ensure that levels of radioactivity are below levels of concern for transportation and for receipt by the analytical laboratory. The US Department of Transportation (DOT) radiological limits include 2.0 nCi/g for total radiological content for solids (or 0.2 nCi/g for liquids) and 1000 dpm/100cm^2 surface radiation. Results of radiological surveys will be provided to the Sample Management Office to ensure that all DOT requirements for shipping are met, and to inform the analytical laboratory of the radiological content of the samples.

Swipe Sampling

For each analyte group, an area of approximately 10 cm x 10 cm or 100 cm^2 area is to be swiped. For each component of the CAI to be sampled (there are eleven components) approximately three sample sets will be taken. For each set (i.e. each location), a separate 100 cm^2-area must be used for each class of analytes: one for VOCs, one for SVOCs, one for total metals, one for total CN, and one for PCBs. At each sample location, the 100 cm^2-areas should be contiguous to the greatest extent practicable. If that is not possible, they must be as near to each other as possible. Where feasible, a template will be used to define each square. In separate sheets of white paper, a 100 cm^2-section will be cut. This template will be placed on the surface to be swiped. The paper will be left in place while the swipe is made. After sampling, the corners of the square sampled will be marked with a pencil or other method. This will also be done in the same manner for the background samples (those taken in the solid waste feed glove box). If negative air pressure or other factors prevent the use of the paper templates, the swipe will be taken by approximating the 100 cm^2-area. After a location is sampled, a Polaroid photo will be taken documenting the location and the location ID number. This sampling method must be approved by the independent Professional Engineer assigned to this closure project.

For everything but PCBs, a circular 2" diameter swipe, cotton on one side, fiberglass on the other will be used. The cotton surface will be used to collect the swiped material. Latex gloves will be employed while collecting the samples, and the gloves will be changed between each sampling location.

The solvents to be used to wet the swipe are:

Methanol for VOCs and SVOCs,
Deionized water for total metals and total Cyanide, and
Hexane for PCBs.

When the swipe has been done for VOCs, the swipe is to be placed in a 20 ml vial containing purge-and-trap reagent grade methanol (the same type of methanol that will be used as the solvent for the swipe), and sealed. This procedure for VOCs was recommended by Paragon Analytics, Inc., the analytical laboratory performing the analyses, to assure that any volatile organic compounds picked up by the swipes would be retained by dissolution in methanol. The methanol and the VOC-free deionized water will be provided by Paragon Analytics, Inc.

After the swipe has been done for SVOCs, the air dried swipe will then be placed in a dry 40 ml vial, and sealed. One swipe will have to be done for total metals (using water as the solvent); and one swipe will have to be done for total CN (also using water as the solvent). For the metals and CN swipes, the swipes will be placed in empty and dried 40 ml vials, and sealed. An amber 40 ml vial will be used for the cyanide swipe.

For PCBs only, a 2 in x 2 in sterile cotton gauze swipe will be used as per the EPA recommended procedure.[10] One swipe soaked with hexane solvent will be used to collect each PCB swipe. After the swipe has been done, it will be placed in a 40 ml vial, and sealed with COC tape.

Sampling of Refractory

The sampling of the hearth of the combustion chamber will be done by brushing and collecting loose material evident on the refractory surface. If enough loose material is not available, a small chisel will be used to scrape semi-consolidated solid material from the refractory surface. This material will be placed in separate vials for each class of analytes, sealed with COC tape, labeled, and cooled.

Previous radiological surveys of the refractory showed significant radiological contamination, and it is expected that the refractory will be disposed as waste. In addition to the surface sampling that will be undertaken on the refractory bricks described above, a sample of each type of refractory will be submitted for Toxic Characteristic Leaching Procedure (TCLP) metals, in particular chromium, because elevated levels of chromium are suspected in some types of refractory. A small chisel and hammer will be used to chip enough material from the surface of the refractory bricks. Samples of the bricks used in the CAI are known to be available that were never used in the CAI combustion chamber. At least 100 grams of brick material must be collected in order to have enough solid to perform TCLP metals. This solid material will be placed in a dry 40 ml vial or a 125 ml wide-mouth glass bottle, capped, sealed with COC tape, labeled, and cooled.

Sampling of Activated Carbon

The CAI has not operated since the activated carbon was replaced, and the activated carbon should contain no contamination. This operating history and the data from the swipe samples of the surfaces of the activated carbon adsorber will be discussed with the waste coordination team to determine if additional analyses of the activated carbon are needed to characterize the material. If needed, a sample of activated carbon will be collected from the carbon bed located in the activated carbon adsorber using a small scoop or laboratory spoon. This material will be placed in separate dry 40 ml vials (depending on the analyses that are necessary), which will then be capped, sealed with COC tape, labeled, and cooled.

Sampling of Wash Water

Wash water used in the decontamination process will be sampled to identify the presence or absence of contaminants to determine whether CAI components have been successfully decontaminated. Wash waters will be analyzed only for constituents that had been identified as above background in swipe samples on the CAI components. Results of wash water samples will also be used to determine how to manage waste water generated from the decontamination activities in accordance with applicable regulations. Wash water solutions will be sampled before use to determine background parameters (two samples will be collected); wash water used in cleaning components will also be sampled to identify any hazardous constituent contamination. Samples will collected by spraying wash solution onto areas of the components identified by swipe samples as having elevated hazardous constituents. Brushes may be used to help dislodge particulate and laminated residues from the surfaces of the sampling area. Washed areas will be rinsed and all waters collected using vacuum or manual pumps or other means for dismantled components. The volume of water collected will be recorded in the sample collection log book. Wash waters will be transferred to sample containers using glass tubes to obtain representative samples as follows:

1. Spray wash solution onto areas of the sampling location that have the greatest likelihood for contamination (e.g., bends, horizontal surfaces, seams, basins, etc.).
2. If areas of slag, ash, or lacquer remain after spraying, use a sampling brush to dislodge the material.
3. Use vacuum or pump to collect washwaters from the sampling area. Use caution not to let washwaters migrate from the sampling area.
4. Ensure that sampling equipment is present (glass tube with stopper, sample container, laboratory wipe, pen, etc.). Ensure that stopper provides a tight closure.
5. Slowly lower the glass tube into the liquid at a rate that permits the levels of the liquid inside and outside the glass tube to be about the same. If the level of the liquid in the glass tube is lower than that outside the glass tube, the sampling rate was too fast and will result in a nonrepresentative sample.
6. When the glass tube hits the bottom of the liquid container, push the stopper in to close the glass tube.
7. Slowly withdraw the glass tube from the container with one hand while wiping the glass tube with a disposable cloth with the other hand.
8. Carefully discharge the sample into a sample container by slowly opening the glass tube. This is done by slowly pulling the stopper from the glass tube while the lower end of the sampler is positioned in the sample container.
9. Cap the sample container(s), and attach a label and COC seal.
10. Record sampling information in the field log as described above.

11. Complete the sample analysis request for and COC record.

Alternative methods of sampling may be necessary. These methods must be approved by the independent Professional Engineer who will oversee the closure and prepare certifications.

Handling/Preservation of Samples

After all samples have been collected/containerized/sealed/labeled, they will be placed in a cooler supplied with frozen blue ice. The samples will be kept under ESH-19's custody until turned over to the Sample Management Office (SMO). At this time the chain-of-custody form(s) will be signed by both ESH-19 and SMO. A copy of the COC form will be maintained by ESH-19. Procedures modified from the EPA NEIC document 330/0-78-001-R will be followed in the chain-of-custody protocol used in this sampling.

IV. QUALITY CONTROL

The independent Professional Engineer will independently oversee the closure activities and report directly to the Project Leader for the CAI closure. This individual or his/her representative will personally observe key activities, ensure that sample blanks are obtained, and review the analytical reports for accuracy and adequacy.

Blanks

Each time a trip is made to the CAI to collect swipe samples, blanks must be collected. These blanks will include:

1) *Trip blanks*. A trip blank will consist of a 40 ml vial containing VOC-free water. This trip blank will be analyzed for VOCs only. This trip blank is to remain unopened in the cooler during the site visit and transportation to the analytical laboratory.

2) *Field blanks*. The field blanks will consist of the following:

a) One unused swipe sitting in a 20 ml vial containing 10 ml of methanol, to be analyzed for VOCs only;

b) One unused swipe that has been wet with methanol sitting in a dry 40 ml vial, to be analyzed for SVOCs;

c) One unused swipe that has been wet with deionized water sitting in a dry 40 ml vial, to be analyzed for total metals;

d) One unused swipe that has been wet with deionized water sitting in a dry 40 ml vial, to be analyzed for total CN; and

e) One unused cotton gauze swipe must be removed from vial, wet with hexane, and exposed to ambient conditions during the sampling event. After event, replaced in vial, to be analyzed for PCBs.

Current plans are to use new, disposable sampling equipment for collection of all samples. Since sampling equipment will not be rinsed in the field or ever re-used, LANL does not plan to submit rinsate blanks. If these plans change and sampling equipment is rinsed for re-use, then appropriate rinsate blanks will be submitted.

The field blanks will be prepared once the sampling team arrives at the site and will remain open until all samples are collected. The vials will then be closed and sealed with custody tape and managed the same as the regular samples.

If the paper template method is used, field blanks will be prepared on one occasion that consist of swipes of 100 cm^2 areas of the paper used for the template. On this occasion, five swipes will be collected by swiping individual 100 cm^2 areas of the paper to be used as the template. That is, two swipes will be done with methanol as the solvent (one swipe analyzed for VOCs, and one swipe analyzed for SVOCs), two swipes will be done with water as the solvent(one swipe to be analyzed for total metals and one swipe for total cyanide), and one swipe will be done using hexane as the solvent (swipe to be analyzed for PCBs).

No less than one split (or duplicate) sample will be collected for every ten locations sampled (about one split per three of the components of the incinerator sampled). A duplicate will consist of a swipe of an 100 cm^2 area adjacent to the area comprising the original sampling location and will be analyzed for the same analyte groups for which the original sample is analyzed. It is anticipated that 2-3 duplicate samples will be collected during the project.

Any field equipment requiring calibration will be calibrated and maintained using the manufacturer's instructions and appropriate standard operating procedures.

Holding Times

All samples will be managed to ensure that holding times as outlined in the RCRA and TSCA closure plans are not exceeded. This should not be a problem since analytical results are being requested on a five-day basis. However, compliance with holding times will be expressly evaluated if there are delays in submittal or analysis of samples.

Analytical Laboratory QA/QC

The analytical laboratory (Paragon Analytics, Inc.) will operate under its own Laboratory Quality Assurance and Quality Control Plan, which was approved for SW-846 methods and EPA Contract Laboratory Procedures through the LANL Environmental Restoration Project specifications for contract analytical laboratories. A copy of the Table of Contents and Introduction sections of this Paragon Analytics, Inc. QA/QC plan is attached as Attachment E.

V. DATA INTERPRETATION

Action Levels for RCRA Closure

The following clarifies the approach planned to define the action limits that are to be established in order to determine whether a particular component of the CAI has hazardous constituents equal or greater than the background sample constituent concentrations at the 0.01 confidence level. This approach, or any modifications to this approach, will be discussed with and approved by the independent Professional Engineer who will oversee and certify the RCRA and TSCA closures.

A method of defining the background concentrations is planned that is similar to the method that the Environmental Restoration Project uses to define background for metals in soils at LANL. This methodology is summarized in the LANL document entitled, "Statistical Comparisons to Background,"[11] This comparison method is called the "hot measurement test." This methodology

one of those test methods discussed in the EPA document entitled "Statistical Analysis of Ground Water Monitoring Data at RCRA Facilities."[12]

This measurement test defines an upper limit threshold value representing background concentrations. This upper tolerance limit or UTL is considered the action level. There will be an action level for each constituent. No matter how a threshold value is chosen, there exists a probability or confidence limit that there is a measurement that will exceed the hot measurement threshold. The confidence limit on a percentage of the distribution (say the 95th or 99th percentile), termed the tolerance limit, is such a value and is one of the background comparison methods recommended by EPA. The RCRA Closure Plan[1] (Section E.4.4) states that constituents concentrations equal to or less than background sample concentrations, at the 0.01 confidence level, are verified as absent from the CAI location that sample came from.

The proposed equation for calculating the UTL for each constituent is:

UTL = mean concentration + std. dev. x k,

where k or the k-factor depends on the number of background samples to be taken, the percentile of the distribution desired and the probability stipulated.

Related to this approach is the method used to allow calculation of the mean and standard deviation of the constituents analyzed in the background samples (those from the glove box) where some results are below the detection limit. For constituents such as metals, it is possible that the results for the control samples will consist of a mixture of reported values and non-detects. In calculating the concentration mean and standard deviation, the non-detects will be censored and a value for that sample constituent will be used that is the reported detection limit divided by two. For instance, if one control sample has an arsenic concentration reported out as <0.06 mg (that's per swipe), this non-detect value will be censored to 0.03 mg. This 0.03 mg value will be used along with the reported values of arsenic for the other control samples to calculate the mean and the standard deviation for arsenic.

For the VOC and SVOC target compounds, it is anticipated that non-detects will be the norm. Where all values are reported as non-detectable, the detection level considering the analytical uncertainty will be used. For instance, if all reported concentrations for benzene in the five control samples are listed as below the detection level, then the detection level at the 0.01 confidence level will be used as the action level for benzene. A mixture of reported values and non-detects will elicit a treatment as described in the paragraph above.

Action Level for TSCA Closure

As contained within the plan for closure approved by the EPA,[2, 3] sampling will be conducted of the CAI to verify no PCB residues are present above the 40 CFR Section 761 Subpart G, *PCB Spill Cleanup Policy*, level for "other restricted access areas." Under the cleanup requirement for other restricted access areas, the CAI equipment must be shown to contain less than 10 ug/100cm^2 PCB contamination. This is the Action Level for PCBs. The presence of PCBs above this Action Level will require those pieces of equipment showing contamination to be either handled as PCB waste or be subjected to further decontamination.

REFERENCES

1. *Amended Closure Plan, Dismantlement Revision,* Attachment E.4 to Hazardous Waste Facility Permit No. NM 0890010515-1 for Los Alamos National Laboratory; Approved by New Mexico Environment Department; June 1996.

2. Letter from Allyn M. Davis, US Environmental Protection Agency, Dallas, Texas to Larry Kirkman, US Department of Energy, Los Alamos, New Mexico; February 27, 1996.

3. Letter from Larry Kirkman, US Department of Energy, Los Alamos, New Mexico to Allyn M. Davis, US Environmental Protection Agency, Dallas, Texas; February 8, 1996.

4. *Decommissioning Management Plan for the Controlled Air Incinerator (CAI) at TA-50,* Decommissioning Project/Environmental Restoration Project, Los Alamos National Laboratory; May 1996.

5. *Test Methods for Evaluating Solid Waste Physical/Chemical Methods, SW-846,* Third Edition, US Environmental Protection Agency, November 1986 (4 Volumes).

6. *Quality Assurance Project Plan Requirements for Sampling and Analysis,* Environmental Restoration Project, Los Alamos National Laboratory; March 1996.

7. "Statement of Work - Analytical Support," Revision 2, RFP No. 9-XS1-Q4257, Los Alamos National Laboratory; July 1995.

8. "Site Specific Health & Safety Plan for Decommissioning of the CAI," *Decommissioning Management Plan for the Controlled Air Incinerator (CAI) at TA-50,* Decommissioning Project/Environmental Restoration Project, Los Alamos National Laboratory; May 1996.

9. "Chain-of-Custody for Samples," in *NEIC Policies and Procedures,* EPA-330/9-78-001-R, US Environmental Protection Agency, Office of Enforcement, National Enforcement Investigations Center, Denver, CO.

10. John Smith, "Wipe Sampling and Double-Wash Rinse Clean-Up as Recommended by the EPA PCB Spill Clean-Up Policy, " June 23, 1987.

11. "Statistical Comparisons to Background, Part 1." Environmental Restoration Project Assessments Council, LANL; January 16, 1996."

12. "Statistical Analysis of Ground Water Monitoring Data at RCRA Facilities," Interim Final Guidance, US Environmental Protection Agency; April 1989.

ATTACHMENTS

Attachment A:	Summary of Samples for Controlled Air Incinerator Showing Location Identification Numbers and Types of Analyses
Attachment B:	Sample Collection Log for Controlled Air Incinerator
Attachment C:	Chain of Custody/Request for Analysis Form
Attachment D:	Sheet of Sample Labels
Attachment E:	Paragon Analytics, Inc., Technical Laboratory Quality Assurance and Quality Control Plan, Revision 0, Table of Contents and Section 1, Introduction

Controlled Air Incinerator

Location ID	Section	Date	VOCs	SVOCs	Total Metal	CN	PCBs
CAI-QT-1	Quench Tower	/ / 96	x	x	x	x	x
CAI-QT-2	Quench Tower	/ / 96	x	x	x	x	x
CAI-QT-3	Quench Tower	/ / 96	x	x	x	x	x
CAI-AT-1	Asorb. Tower	/ / 96	x	x	x	x	x
CAI-AT-2	Asorb. Tower	/ / 96	x	x	x	x	x
CAI-AT-3	Asorb. Tower	/ / 96	x	x	x	x	x
CAI-ST-1	Scrubber Tank	/ / 96	x	x	x	x	x
CAI-ST-2	Scrubber Tank	/ / 96	x	x	x	x	x
CAI-ST-3	Scrubber Tank	/ / 96	x	x	x	x	x
CAI-HP-1	HEPA	/ / 96	x	x	x	x	x
CAI-HP-2	HEPA	/ / 96	x	x	x	x	x
CAI-HP-3	HEPA	/ / 96	x	x	x	x	x
CAI-EX-1	Exhaust	/ / 96	x	x	x	x	x
CAI-EX-2	Exhaust	/ / 96	x	x	x	x	x
CAI-EX-3	Exhaust	/ / 96	x	x	x	x	x
CAI-AR-1	Ash Removal	/ / 96	x	x	x	x	x
CAI-AR-2	Ash Removal	/ / 96	x	x	x	x	x
CAI-AR-3	Ash Removal	/ / 96	x	x	x	x	x
CAI-GB-1	Glove Box	/ / 96	x	x	x	x	x
CAI-GB-2	Glove Box	/ / 96	x	x	x	x	x
CAI-GB-3	Glove Box	/ / 96	x	x	x	x	x
CAI-GB-4	Glove Box	/ / 96	x	x	x	x	x
CAI-GB-5	Glove Box	/ / 96	x	x	x	x	x
CAI-LF-1	Liquid Feed	/ / 96	x	x	x	x	x
CAI-LF-2	Liquid Feed	/ / 96	x	x	x	x	x
CAI-LF-3	Liquid Feed	/ / 96	x	x	x	x	x
CAI-SF-1	Solid Feed	/ / 96	x	x	x	x	x
CAI-SF-1	Solid Feed	/ / 96	x	x	x	x	x

CAI-SF-3	Solid Feed	/	/ 96	x	x	x	x	x
CAI-AC-1	Activated Carbon	/	/ 96	x	x	x	x	x
CAI-AC-2	Activated Carbon	/	/ 96	x	x	x	x	x
CAI-AC-3	Activated Carbon	/	/ 96	x	x	x	x	x
CAI-DP-1	Duplicate	/	/ 96	x	x	x	x	x
CAI-DP-2	Duplicate	/	/ 96	x	x	x	x	x
CAI-DP-3	Duplicate	/	/ 96	x	x	x	x	x
CAI-FB-1	Field Blank *	/	/ 96	x	x	x	x	x
CAI-FB-2	Field Blank	/	/ 96	x	x	x	x	x
CAI-FB-3	Field Blank	/	/ 96	x	x	x	x	x
CAI-FB-4	Field Blank	/	/ 96	x	x	x	x	x
CAI-FB-5	Field Blank	/	/ 96	x	x	x	x	x
CAI-TB-1	Trip Blank	/	/ 96	x				
CAI-TB-2	Trip Blank	/	/ 96	x				
CAI-TB-3	Trip Blank	/	/ 96	x				
CAI-TB-4	Trip Blank	/	/ 96	x				
CAI-TB-5	Trip Blank	/	/ 96	x				
CAI-TB-6	Trip Blank	/	/ 96	x				
CAI-TB-7	Trip Blank	/	/ 96	x				
* One Field								
Blank will								
consist of								
swiping the								
paper								
template								

ATTACHMENT B

Los Alamos National Laboratory
Controlled Air Incinerator
Swipe Sampling for Clean Closure

Swipe Material	Solvent	Analysis Requested	Containers Used
Circular Cotton	Methanol	VOCs	40 ml Vial
Circular Cotton	Methanol	SVOCs	40 ml Vial
Circular Cotton	H2O	Total Metals	40 ml Vial
Circular Cotton	H2O	CN	40 ml Vial
Square Cotton Gauze	Hexane	PCBs	40 ml Vial

Sample Area: 100 sq. cm

Date: _____
Time: _____

Sampler: _____
Asst. Sampler: _____

Technical Area: 50
Sample Location: Demister
Location ID: CAI - DM - 2

Weather: _____

Comments:

The swipe is dampend with the appropriate solvent before taking the sample.
After the sample is taken, the swipe is placed in a 40 mL vial.
The swipe for VOCs is placed in a vial containing Methanol
The swipes for the remaing analytes, are placed in dry 40 mL vials.
Samples are submitted to the Sample Management Office,
to be shipped to Paragon Analytics in Fort Collins, Colorado.

Los Alamos National Laboratory
CHAIN OF CUSTODY/REQUEST FOR ANALYSIS

Date _____

Technical Area _____ Send Lab Report _____ MS _____

Unit _____ Site Work Plan _____

OU Contact _____ Date Samples Shipped _____

Contact Phone No. _____ Date Lab Report Required _____

Field Unique Sample #/ID (Write in sample ID number in space below)	Date and Time Collected	GRAB	COMP	Sample Container Volume/Material	Matrix (Liquid, Soil, Core, Sludge, Etc.)	Preservative	Analysis Requested		Remarks (Condition of receipt, etc.)
							Test	Method	

Relinquished by *(Signature)* Affiliation	Date	Relinquished by *(Signature)* Affiliation	Date	Relinquished by *(Signature)* Affiliation	Date
Received by *(Signature)* Affiliation	Time	Received by *(Signature)* Affiliation	Time	Received by *(Signature)* Affiliation	Time

POSSIBLE HAZARD IDENTIFICATION
(Please indicate if sample(s) are hazardous materials and/or are suspected to contain high levels of hazardous substances.)

Radiological Highly Toxic ____ Flammable ____ Skin Irritant ____ Nonhazard ____ Other ____

SAMPLE DISPOSAL

Return to client ____ Disposal by lab ____ Archive ____ (Indicate number of months) ____

COMMENTS _____

SAMPLING TEAM (Print names and initial) _____

SOP 1.04, R0

ATTACHMENT C

ATTACHMENT D

LOS ALAMOS NATIONAL LABORATORY		LOS ALAMOS NATIONAL LABORATORY	
TA- 50 Controlled Air Incinerator	LOCATION ID: CAI- QT-1	TA- 50 Controlled Air Incinerator	LOCATION ID: CAI- QT-2
DATE: / / 96	TIME:	DATE: / / 96	TIME:
ANALYSIS : VOCs	LOCATION: Quench Tower	ANALYSIS : VOCs	LOCATION: Quench Tower
	PRESERVATIVE: 4°C		PRESERVATIVE: 4°C
COLLECTED BY: Ron Conrad, Albert Dye, Marquis Childs INITIALS:		COLLECTED BY: Ron Conrad, Albert Dye, Marquis Childs INITIALS:	

LOS ALAMOS NATIONAL LABORATORY		LOS ALAMOS NATIONAL LABORATORY	
TA- 50 Controlled Air Incinerator	LOCATION ID: CAI- QT-3	TA- 50 Controlled Air Incinerator	LOCATION ID: CAI- AT-1
DATE: / / 96	TIME:	DATE: / / 96	TIME:
ANALYSIS : VOCs	LOCATION: Quench Tower	ANALYSIS : VOCs	LOCATION: Absorb Tower
	PRESERVATIVE: 4°C		PRESERVATIVE: 4°C
COLLECTED BY: Ron Conrad, Albert Dye, Marquis Childs INITIALS:		COLLECTED BY: Ron Conrad, Albert Dye, Marquis Childs INITIALS:	

LOS ALAMOS NATIONAL LABORATORY		LOS ALAMOS NATIONAL LABORATORY	
TA- 50 Controlled Air Incinerator	LOCATION ID: CAI- AT-2	TA- 50 Controlled Air Incinerator	LOCATION ID: CAI- AT-3
DATE: / / 96	TIME:	DATE: / / 96	TIME:
ANALYSIS : VOCs	LOCATION: AbsorbTower	ANALYSIS : VOCs	LOCATION: Absorb Tower
	PRESERVATIVE: 4°C		PRESERVATIVE: 4°C
COLLECTED BY: Ron Conrad, Albert Dye, Marquis Childs INITIALS:		COLLECTED BY: Ron Conrad, Albert Dye, Marquis Childs INITIALS:	

LOS ALAMOS NATIONAL LABORATORY		LOS ALAMOS NATIONAL LABORATORY	
TA- 50 Controlled Air Incinerator	LOCATION ID: CAI- ST-1	TA- 50 Controlled Air Incinerator	LOCATION ID: CAI- ST-2
DATE: / / 96	TIME:	DATE: / / 96	TIME:
ANALYSIS : VOCs	LOCATION: Scrubber Tank	ANALYSIS : VOCs	LOCATION: Scrubber Tank
	PRESERVATIVE: 4°C		PRESERVATIVE: 4°C
COLLECTED BY: Ron Conrad, Albert Dye, Marquis Childs INITIALS:		COLLECTED BY: Ron Conrad, Albert Dye, Marquis Childs INITIALS:	

LOS ALAMOS NATIONAL LABORATORY		LOS ALAMOS NATIONAL LABORATORY	
TA- 50 Controlled Air Incinerator	LOCATION ID: CAI- ST-3	TA- 50 Controlled Air Incinerator	LOCATION ID: CAI- HP--1
DATE: / / 96	TIME:	DATE: / / 96	TIME:
ANALYSIS : VOCs	LOCATION: Scrubber Tank	ANALYSIS : VOCs	LOCATION: HEPA
	PRESERVATIVE: 4°C		PRESERVATIVE: 4 C
COLLECTED BY: Ron Conrad, Albert Dye, Marquis Childs INITIALS:		COLLECTED BY: Ron Conrad, Albert Dye, Marquis Childs INITIALS:	

ATTACHMENT E

PARAGON ANALYTICS, INC.

AN EMPLOYEE OWNED SMALL BUSINESS

225 Commerce Drive Fort Collins, Colorado 80524 (800) 443-1511

Message

Phone (970) 490-1511
Fax (970) 490-1522

Here are the Lab QA Plan excerpts that you requested.

Please call me if there is anything more that you need.

To	Ron Conrad	Company	LANL ESH-19
Fax No.	(505) 667-5224	Date	6/13/96
From	Lance Steere	Total Pages	10

If you do not receive all the pages, please call us back as soon as possible.

PARAGON ANALYTICS, INC.
225 Commerce Drive • Fort Collins, CO 80524 • (800) 443-1511 • (970) 490-1511 • FAX (970) 490-1522

TECHNICAL LABORATORY QUALITY ASSURANCE AND QUALITY CONTROL PLAN

Revision: 0

Copy Control #:_____

Donald Gipple
Laboratory Manager

Date: 5/5/95

Karen T. Kotz
Corporate Quality Assurance Manager

Date: 5/5/95

Effective 3/1/96, doing business as Paragon Analytics Inc. This is the result of an employee buy-out. We have retained the ATI QA/QC Plan and an update to reflect the new name.

Analytical Technologies, Inc.
225 Commerce Drive
Fort Collins, Colorado 80524
(970) 490-1511

CONFIDENTIAL

An Employee Owned Small Business

TABLE OF CONTENTS

Section	Title	Revision	Date
1.0	INTRODUCTION	0	05-03-95
	1.1 QA/QC Objectives		
	1.2 QA/QC Scope and Approach		
	1.3 ATI-Fort Collins Quality Assurance Documents		
	1.3.1 Standard Operating Procedures		
	1.3.2 Project Specific Plans		
	1.4 Control, Distribution and Revision of Quality Documents		
	1.4.1 Quality Assurance Manual and Plans		
	1.4.2 Project Specific Plans		
	1.4.3 Standard Operating Procedures		
2.0	LABORATORY ORGANIZATION AND PERSONNEL	0	05-03-95
	2.1 Overview		
	2.2 Roles and Responsibilities		
	2.2.1 The Laboratory Quality Assurance Manager		
	2.2.2 Other Laboratory Personnel - QA/QC Responsibilities		
3.0	TRAINING	0	05-03-95
	3.1 New Employee Orientation		
	3.2 Training for Specific Analytical Procedures		
	3.3 Quality Assurance Training		
	3.3.1 Formal QA Program		
	3.3.2 Standard Operating Procedures		
	3.4 Health and Safety Training		

Section	Title	Revision	Date
4.0	SAMPLE HANDLING	0	05-03-95
	4.1 Sample Collection		
	4.2 Sample Containers and Preservation		
	4.3 Sample Tracking		
5.0	REPORTING LIMITS AND LIMITS OF DETECTION	0	05-03-95
6.0	QC PROCEDURES AND DOCUMENTATION	0	05-03-95
	6.1 Overview of Quality Control Program		
	6.1.1 Quality Assurance		
	6.1.2 Quality Control		
	6.1.3 Quality Assessment		
	6.2 Evaluating Quality Control		
	6.2.1 Precision		
	6.2.2 Accuracy		
	6.2.3 Completeness		
	6.3 Preventive Maintenance		
	6.4 Initial and Continuing Calibration Procedures		
	6.4.1 Standard Preparation Logs		
	6.4.2 Gas Chromatography Calibration		
	6.4.3 GC/MS Calibration		
	6.4.4 ICP and Atomic Absorption Calibration		
	6.5 Setting of Retention Time Windows for GC and GC/MS		
	6.6 Use of Control Samples and Reference Materials		
	6.6.1 Blanks		
	6.6.2 Laboratory Control Standards		
	6.6.3 Initial and Continuing Calibration Checks		
	6.6.4 Duplicate Sample Analysis		
	6.6.5 Matrix Spikes		
	6.6.6 Blank Spikes		
	6.6.7 Surrogate Spikes		

6.7 Confirmation

Section	Title	Revision	Date
6.8	Acceptance Criteria		
6.8.1	GC/MS Tuning		
6.8.2	GC Performance Standards (breakdown products)		
6.8.3	MS Identifications		
6.8.4	Surrogates		
6.8.5	Blanks		
6.8.6	Continuing Calibration Verification		
6.8.7	Matrix Spikes		
6.8.8	Duplicate Analysis		
6.8.9	Corrective Actions		
6.9	Additional Quality Control Measures		
6.10	Goal for Completeness		
7.0	PROCEDURES FOR DETERMINING AND REPORTING OUT-OF-CONTROL EVENTS	0	05-03-95
7.1	Defining an Out-of-Control Event		
7.2	Responding to an Out-of-Control Event		
7.2.1	Roles and Responsibilities		
7.3	Corrective Actions		
7.4	Documenting an Out-of-Control Event		
8.0	DATA VERIFICATION	0	05-03-95
8.1	QC Sample Processing		
8.2	Documentation		
8.3	Data Validation		
8.3.1	Data Processing		
8.3.2	Data Review		
8.3.3	QA Approval and Review		
8.3.4	Final Data Review		

8.3.5 Data Outliers and Anomalies

Section	Title	Revision	Date
9.0	DATA REPORTS	0	05-03-95
	9.1 Format and Content		
	9.1.1 Cover Letter		
	9.1.2 Analysis Reports		
	9.1.3 Quality Control Report		
	9.2 Data Transmission		
10.0	RECORDS MANAGEMENT	0	05-03-95
11.0	AUDITS, SURVEILLANCES AND REPORTS TO MANAGEMENT	0	05-03-95
12.0	REFERENCES	0	05-03-95

1.0 INTRODUCTION

This Quality Assurance Plan summarizes the Analytical Technologies, Inc. (ATI) quality assurance procedures for providing service as an analytical chemistry laboratory for government agencies such as EPA as well as commercial clients. The purpose of this plan is to assure that consistently accurate data are being reported in support of ATI's responsibilities as an environmental chemistry laboratory serving both government agencies and private sector concerns.

Within this plan, the following definitions will be used:

Quality Assurance: The overall controls imposed upon laboratory operations. Included are all actions taken by personnel and the documentation of laboratory performance as specified in the Quality Assurance Program.

Quality Control: The daily specific actions taken within the laboratory to verify sample integrity, performance of analysis, data processing, and record maintenance.

1.1 QA/QC Objectives

Overview: The major responsibility of ATI is to provide data which is timely, cost-effective, and of a quality required by the client. The accomplishment of these goals is the principal objective of ATI's QA program. It recognizes that the data generated by our staff must be credible. This is ensured by the QA/QC program which monitors all phases of data generation, ranging from sample collection to sample handling, and from the actual analysis to the reporting of data.

1.2 QA/QC Scope and Approach

1.2.1 ATI routinely checks the quality of analytical work through analysis of reference samples, duplicate samples, and spiked samples. Statistically based control limits are established for each method of analysis and sample matrix.

1.2.2 The accuracy of measurement data is evaluated by the use of a reference material of known or established concentration. It may be used "as is" or diluted with an inert matrix as a blind environmental sample.

1.2.3 Accuracy is also evaluated when spiked samples are run for each analysis batch of samples for each type of sample matrix. Recoveries are assessed to determine method success and interference effects. A spiked sample is analyzed for each batch of ten samples (10%) or twenty samples (5%), depending upon the individual test. Small sample lots are routinely analyzed and accuracy data may be reported on a more frequent basis.

1.2.4 Precision is routinely evaluated based upon the results of samples which are analyzed in duplicate. A duplicate sample is analyzed for each batch of ten samples (10%) or

twenty samples (5%), depending upon the individual test. Small sample lots are routinely analyzed and precision data may be reported on a more frequent basis.

1.2.5 Both precision and accuracy are dependent on type of analysis, the sample matrix, and the concentration range of the particular analytes.

1.2.6 All data are visually checked for consistency and reasonableness, and any unusually high or low results are checked. Data are calculated and reported in units consistent with the approved method for comparability of results. Unusually high or unexpectedly low results are verified using different methods where possible.

1.2.7 All data entry, calculation, and reporting is reviewed by a second knowledgeable and professional party for errors, trends, consistency, and reasonableness. Staff are cognizant of basic Good Laboratory Practices such as "Z-ing" out unused portions of pages, legible handwriting using indelible, photocopy reproducible ink, and single line, initialed corrections.

1.2.8 Completeness can be determined as the percentage of the sample data for which the associated QC data is found to be acceptable. Precision and accuracy determinations, if outside the acceptance criteria due to sample related causes, may be regarded as qualifying and not invalidating the associated data.

1.2.9 ATI-Fort Collins seeks to upgrade the over-all quality of laboratory performance by:

1.2.9.1 Promptly recognizing and providing correction for any factors which adversely affect quality.

1.2.9.2 Monitoring the operational performance of the laboratory on a routine basis through system and performance audits and providing corrective action as needed.

1.3 ATI-Fort Collins Quality Assurance Documents

Complete documentation of any operation requires several types of quality assurance documents. ATI utilizes the Corporate Quality Assurance Manual to provide the overall quality policy. The ATI-Fort Collins facility utilizes the ATI-Fort Collins QA Manual to provide information about the overall QA policy. The manual, composed of four documents or sets of documents, discusses aspects of quality control and quality assurance for all levels of the organization. The Technical QA/QC Plan, one of the four documents, does not provide in-depth technical discussions but rather establishes the guidelines for developing and setting QA/QC procedures, documentation, in-depth technical procedures and protocol . Except as noted in Section 1.3.2.2, this plan does, however, have precedence in policy matters over other quality-related items. Other quality assurance documents provide either supportive or additional information, or are used to meet specific project requirements.

1.3.1 Standard Operating Procedures (SOPs)

SOPs provide detailed discussion and instructions for the implementation of QA/QC policies, analytical methods and procedures. A listing of ATI-Fort Collins SOPs current at the revision date of this manual may be found in Appendix A.

1.3.2 Project Specific Manuals or Quality Assurance Project Plans (QAPjP)

1.3.2.1 Specific contractual and regulatory demands may require the implementation of a QAPjP. Specific Data Quality Objectives (DQOs) may create a need to define criteria for:

1.3.2.1 The development and/or use of new testing methods.

1.3.2.2 Variations in equipment calibration and maintenance.

1.3.2.3 Adjusted detection limits for testing.

1.3.2.4 Adjusted accuracy and precision limits and the statistical treatment of data.

1.3.2.5 Additional or different document and record formats and maintenance.

1.3.2.2 If a specific project requires a unique QA Program, a project specific plan will be implemented. Full documentation will be provided in the Project-Specific Plan or QAPjP. The requirements of the work will take precedence over conventional ATI-Fort Collins QA practices when a project-specific manual or QAPjP is utilized.

1.4 Control, Distribution and Revision of Quality Assurance Documents

1.4.1 The QA/QC Plan, SOPs and Project-Specific Plans or QAPjP are approved by laboratory management and are controlled documents. Laboratory approvals required before issue for the documents are as follows:

1.4.1.2 ATI-Fort Collins Quality Assurance Manual (which contains the NQA-1 QA Plan, the QA Procedures, the Technical QA/QC Plan and the SOP documents in 1.4.1.3):
Laboratory Manager
Quality Assurance Manager

1.4.1.2 Laboratory Project Specific Manuals/QAPjP:
Laboratory Manager
Quality Assurance Manager

Project Managers

1.4.1.3 Standard Operating Procedures:
Laboratory Manager
Quality Assurance Manager
Supervisor or technical lead from appropriate area

1.4.2 Documents will be made available to all ATI-Fort Collins personnel at their functional work area. All copies distributed within ATI-Fort Collins are numbered for document control. Distribution of the Quality Assurance Manual, its associated documents and SOPs will be by the Quality Assurance Department. Records of distribution of all revised sections and SOPs will be maintained by the QA Department.

So that all Quality Assurance documents can be revised as necessary, distribution records are maintained by the Quality Assurance Department. Before issue, revisions will require the same approvals as the original document. Revisions will be consecutively numbered, and each page revised shall denote the numbered revision. To facilitate revision of Quality Assurance documents, each page shall contain the following information in the header:

SOP No. and Revision
Title
Associated Forms
Approval Notations
History of the document

1.4.3 Copies of Quality Assurance documents and revisions may be issued external to ATI-Fort Collins as required. Authorization for distribution will be by the QA Manager. These documents may be controlled (uniquely numbered) or uncontrolled (unnumbered) copies, depending on the reason for issue. Only controlled copies will be revised in accordance with the above policies.

The QA Department will maintain a distribution list for all SOPs and other controlled documents.

In all cases, external copyholders will be asked to return QA documents when the need for the document has ended. Exceptions to this will be if the external party requires a copy for record keeping purposes.

Appendix C

Correspondence

Department of Energy
Albuquerque Operations Office
Los Alamos Area Office
Los Alamos, New Mexico 87544

MAR 2 7 1997

CERTIFIED MAIL - RETURN RECEIPT REQUESTED

Stuart Dinwiddie
Program Manager/Permitting Section
Hazardous and Radioactive Materials Bureau
New Mexico Environment Department
2044 Galisteo St., Bldg. A
P. O. Box 26110
Santa Fe, NM 87505

Dear Mr. Dinwiddie:

Subject: Follow-up on Issues from the March Monthly Meeting

The purpose of this letter is to follow up on a number of issues that were discussed at the March monthly meeting. At that meeting, we spent some time discussing the recent approval of the RANT/WCRRF/TA-50-1 Decon Facility application and issues concerning the completion of the closure of the CAI.

One of the issues that you clarified concerned whether the TA-50-1 Decon Facility was included in the approval. To us it was unclear in your transmittal letter because the other two units were mentioned by name and the Decon Facility was not. You confirmed that the TA-50-1 Decon Facility was included in your approval of the RANT/WCRRF facilities.

We discussed the WAP that was approved in this application and how it applied to the TWISP application that was submitted in "93" and that later received "conditional" approval. With the approval of the WAP (the same one developed for TWISP in response to a NMED NOD) in the current application for RANT/WCRRF/TA-50-1 Decon Facility, we asked if the TWISP application was now complete and approved. Steve Zappe of your staff confirmed that it was and that we could begin activities at TWISP. We asked if this approval could be provided in writing to make it official and Mr. Zappe agreed to do that.

We asked when we could expect implementing language on each of these application approvals. NMED stated that the amended language for the permit would reflect the information contained in the application and that the amended permit would be sent soon.

PERSONAL FILE COPY

5400.1.24.3

MAR 27 1997

In the interim, you stated Los Alamos National Laboratory would operate according to the information contained in the applications.

We discussed the completion of the closure of the CAI. We had concerns over addressing the portions of equipment that would be left behind and not be "closed" with the rest of the incinerator. We mutually agreed that the stack, HEPA filtration bank, plenum and associated ducts and fans had further use for operations in TA-50-37, that the RAMROD application would be amended to include this equipment, and that closure activities for RAMROD would address this equipment. The revision would be a matter of changing out a few pages, and since NMED had not begun the review of this application, this would be acceptable.

We would appreciate your review and concurrence of these issues so there is a record of our interactions. This will eliminate any possible questions arising in the future as a result of the Environmental Protection Agency review or other activity.

Thank you for the opportunity to discuss these issues with you and your staff and we look forward to future interactions with NMED.

Sincerely,

H. L. "Jody" Plum
Office of Environment and Projects

LAAMEP:2JP-066

cc:
Jack Ellvinger, ESH-19, LANL, MS-K490
Ines Triay, CST-7, LANL, MS-J514
Tony Stanford, EM-SWO, LANL, MS-J595
ESH-19, (970061.JEE), LANL, MS-K490

PERSONAL FILE COPY

State of New Mexico
ENVIRONMENT DEPARTMENT
Hazardous & Radioactive Materials Bureau
2044 Galisteo
P.O. Box 26110
Santa Fe, New Mexico 87502
(505) 827-1557
Fax (505) 827-1544

GARY E. JOHNSON
GOVERNOR

MARK E. WEIDLER
SECRETARY

EDGAR T. THORNTON, III
DEPUTY SECRETARY

CERTIFIED MAIL
RETURN RECEIPT REQUESTED

April 14, 1997

H.L. "Jody" Plum
Office of Environment and Projects
Department of Energy
Los Alamos Area Office
P.O. Box 6300
Los Alamos, New Mexico 87544

RE: Response to the "Follow-up on Issues from the March Monthly Meeting" letter

Dear Mr. Plum:

The New Mexico Enviroment Department (NMED) Hazardous and Radioactive Materials Bureau (HRMB) is responding to the letter dated March 27, 1997, in reference to several issues brought up during the Department of Energy (DOE)/Los Alamos National Laboratory (LANL) Waste Management monthly meeting with HRMB. The following indicates HRMB's position regarding each issue:

- For clarification as part of the RANT, WCRRF and TA-50-1 Decon Facility application approvals, the TA-50-1 Decon Facility is approved.

- With regards to the approval of the TWISP project, NMED is evaluating the appropriate response to DOE/LANLs inquiry. A response to this inquiry will be delivered in the near future.

- The amended language for the permit on the approvals of the RANT, WCRRF and TA-50-1 Decon Facility will be delivered in the near future. In the interim, LANL will operate according to the applications for each facility.

- HRMB agrees with the approach that the stack, HEPA filtration bank, plenum and associated ducts and fans used as part of the CAI could be used in association with the RAMROD operations at TA-50-37. The RAMROD application must be amended to include this equipment and address closure as part of the RAMROD activities. The revised pages to the RAMROD application should be delivered to HRMB within 30 days upon receipt of this letter.

If you have any questions regarding these issues please contact myself or Mr. John Kieling of my staff at (505) 827-1561.

Sincerely,

Robert S. (Stu) Dinwiddie
RCRA Permits Management Program Manager
Hazardous and Radioactive Materials Bureau

RSD:jek

cc: Benito Garcia, Chief HRMB
Teri Davis, NMED HRMB
David Neleigh, EPA, 6PD-N
Jack Ellvinger, LAAO, MS-A316
Roy Bohn, LANL EM/ER, MS-M992
FILE: Reading and RED LANL 97
TRACK: LANL, 3/17/97, N/A, DOE/LANL, HRMB/JEK, RE, File

Department of Energy
Albuquerque Operations Office
Los Alamos Area Office
Los Alamos, New Mexico 87544

SEP 16 1996

CERTIFIED MAIL - RETURN RECEIPT REQUESTED

Mr. Benito Garcia, Bureau Chief
Hazardous and Radioactive Materials
Bureau
New Mexico Environment Department
2044 Galisteo Street, Building A
P. O. Box 26110
Santa Fe, NM 87505-2100

Dear Mr. Garcia:

Subject: Follow-up to the August 21, 1996 Monthly Meeting, Agenda Item #1

At the monthly meeting between the New Mexico Environment Department (NMED), the Department of Energy (DOE), and the University of California (UC), the closure of the Controlled Air Incinerator (CAI) was discussed with Stu Dinwiddie of your staff. It was mutually agreed that the substance of that discussion would be transmitted to NMED via a letter to insure that it was documented.

Three issues concerning the CAI were presented for NMED's information:

- When looking at the CAI, DOE and UC view it as individual pieces of equipment. When developing the closure plan, the CAI was divided into distinct components. Each component was identified for sampling. When a component was sampled and found to be clean (either initially or after deconning) or determined to be of such a state that it was no longer feasible to continue to try and decon it, that piece of equipment would then be eligible for final disposition. This will allow reuse of the various components, such as the stack and blower, even if other components must be managed as waste.

  NMED agreed that the intent of the closure plan was to look at each component and withdraw it from further activity if sample analysis indicated that it was not contaminated with constituents.

- In regards to sampling the individual components of the CAI, it is the approach of DOE and UC to review the results of the initial sampling and use that information in conducting any additional sampling. If a particular component was found to

PERSONAL FILE COPY

have only RCRA heavy metal contamination, any additional sampling after deconning activities would look only for RCRA heavy metals.

NMED agreed that follow-up analysis for a given component (if contaminated with RCRA heavy metals only) would consist of sampling for only heavy metals. For a component identified to have organic constituents present, it was agreed that a full suite of analysis would be necessary to confirm that they were clean.

- The planned disposition of equipment and materials was discussed. The planned disposition of the equipment may include reuse of some components, disposal of some components as hazardous waste, disposal of some components as low-level wastes and recycling of some components.

  DOE and UC agreed to provide NMED with a list of the final disposition of all components of the CAI in the final closure report for this unit.

If you have any questions concerning this issue or the contents of this letter, please feel free to contact me at (505) 665-5042.

Sincerely,

H. L. (Jody) Plum
Office of Environment and Projects

LAAMEP:9JP-039

bcc:
H. Haynes, Office of Counsel, LAAO
K. Hargis, EM/WM, LANL, MS-J552
J. Ellvinger, ESH-19, LANL, MS-K490
ESH-19 (960320.JEE), MS-K490

PERSONAL FILE COPY

Appendix D

Data Tables

Table D-1a. Controlled-Air Incinerator Closure Final Rinsate Metals Analyses (units in mg/*l*).

Sample ID	Sb	As	Ba	Be	Cd	Cr	Pb	Hg	Ni	Se	Ag	Tl	Precision[4]
CAI-AC-5	0.003	0.004	0.013	0.0001	0.0003	0.004	0.001	0.0004	0.008	0.004	0.001	0.003	0.8-2.3
CAI-QT-5	0.009	0.004	0.166	0.0001	0.0009	0.014	0.016	0.00009	0.118	0.002	0.001	0.004	0.0-1.5 (9.6 Hg)
CAI-QT-15	0.004	0.007	0.032	0.0002	0.0002U	0.009	0.002	0.00006	0.052	0.003	0.0007	0.003	0.0-8.4*
CAI-QT-20	0.004	0.004	0.028	0.00007	0.002	0.02	0.008	0.00008	0.13	0.004	0.0007	0.003	0.1-3.4 (5.3 Hg)
CAI-AT-5	0.174	0.011	1.26	0.0003	0.044	0.394	0.324	0.0003	2.18	0.005	0.001U	0.006	0.0-2.1 (13.5 Hg)
CAI-AT-10	0.023	0.002	0.061	0.0001	0.005	0.025	0.014	0.0002	0.507	0.002	0.001U	0.003	NA
CAI-SF-8	0.11	0.002	0.111	0.0001	0.013	0.323	0.058	0.0004	0.222	0.002	0.001	0.005	0.0-2.1 (13.5 Hg)
CAI-SF-9	0.119	0.002	0.116	0.0001	0.013	0.307	0.062	0.0004	0.221	0.003	0.001	0.003	0.0-2.1 (13.5 Hg)
CAI-SF-10	0.031	0.016	0.026	0.0001	0.003	0.019	0.03	0.0002	0.048	0.002	0.0001	0.003	NA
CAI-SF-11	0.023	0.002	0.035	0.0001U	0.002	0.081	0.009	0.0001	0.041	0.002	0.001	0.003U	NA
CAI-VNT-1	0.003	0.003	0.024	0.0001	0.0003	0.005	0.0001	0.00002	0.018	0.002	0.001	0.003	0.0-3.1
CAI-H-1	0.003	0.005	0.022	0.0001	0.0003	0.006	0.002	0.00003	0.011	0.002	0.001	0.003	0.0-3.1
CAI-DE-1	0.003	0.002	0.023	0.0001	0.0003	0.005	0.006	0.00003	0.009	0.002	0.001	0.003	0.0-3.1
CAI-FG-1	0.003	0.005	0.019	0.0001	0.0003	0.004	0.002	0.00002	0.010	0.003	0.001	0.003	0.0-3.1
CAI-AR-10	0.003U	0.005	0.024	0.0001U	0.0003U	0.006	0.007	0.00002	0.006	0.002U	0.001U	0.004	NA
CAI-AR-11	0.01	0.007	0.298	0.0005	0.005	0.15	0.329	0.0005	0.983	0.003	0.0012	0.003	0.0-8.4*
CAI-AR-12	0.005	0.007	0.041	0.0004	0.001	0.054	0.014	0.00008	0.037	0.003	0.001	0.003	0.0-8.4*
CAI-RH-1	0.003	0.004	0.044	0.0001U	0.002	0.038	0.001U	0.0003	0.069	0.002U	0.001U	0.003U	NA
CAI-HP-10	0.005	0.005	0.028	0.0001U	0.003	0.007	0.048	0.0002	0.034	0.002U	0.001U	0.003U	NA
CAI-HP-11	0.012	0.004	0.041	0.0004	0.024	0.157	0.018	0.0002	0.116	0.018	0.001U	0.003U	0.0-8.4*
CAI-HP-12	0.051	0.004	0.046	0.0001	0.007	1	0.021	0.0005	0.548	0.011	0.001U	0.005	0.0-8.4*
CAI-HP-14	0.004	0.003	0.037	0.0001	0.036	0.202	0.061	0.0001	0.182	0.004	0.001U	0.003U	0.0-8.4*
CAI-ST-10	0.004	0.005	0.027	0.0004	0.001	0.008	0.009	0.00004	0.019	0.003	0.0007	0.003	0.0-0.9 (Hg 2.0)
CAI-ST-11	0.004	0.005	0.053	0.0004	0.007	0.041	0.073	0.0002	1.07	0.003	0.0007	0.003	0.0-0.9 (Hg 2.0)
CAI-ST-12	0.004	0.003	0.024	0.00007	0.0002	0.005	0.001	0.00003	0.018	0.007	0.0007	0.003U	0.0-3.6
CAI-PI-1	0.005	0.003	0.03	0.0002	0.001	0.048	0.004	0.0001	0.234	0.003	0.0009	0.003	0.1-5.3
CAI-PI-2	0.005	0.004	0.031	0.0001	0.001	0.012	0.002	0.00007	0.054	0.003	0.0009	0.003	0.1-5.3
CAI-PM-1	0.004	0.003	0.03	0.00007	0.008	0.012	0.003	0.00008	0.361	0.003	0.0007	0.003	0.1-5.3
CAI-HC-1	0.004	0.003	0.028	0.00007	0.003	0.01	0.002	0.00009	0.166	0.003	0.00007	0.003	0.1-5.3
CAI-SC-1	0.004	0.003	0.031	0.0007	0.008	0.094	0.002	0.00008	0.466	0.003	0.0007	0.003	0.1-5.3
CAI-SC-2	0.007	0.005	0.027	0.00007	0.006	0.016	0.002	0.00008	0.06	0.003	0.0007	0.003	0.1-5.3
UTL	**0.041**	**0.012**	**0.024**	**0.001**	**0.0003**	**0.0126**	**0.01**	**0.00002**	**0.008**	**0.012**	**0.001**	**0.003**	—
Detection Limits	0.003	0.0016	0.0001	0.0001	0.0003	0.0005	0.0012	0.00002	0.0006	0.0018	0.001	0.003	—

Adapted from original table and data supplied by Los Alamos National Laboratory

NOTES:

1. Shaded cells indicate RCRA metals where concentrations are greater than the Upper Tolerance Limit (UTL).
2. UTL = "Upper Tolerance Limit" The UTL is the compliance point, or performance standard for decontamination. The UTL is calculated from the mean and standard deviation of the baseline (background) data. It represents the 99 percent confidence interval for each analyte, beyond which the verification data is considered to be in excess of the background concentration.
3. Data QC Qualifiers "U"= Not Detected (reported as detection limit); "*" = The RPD was beyond acceptable tolerance limits for Cr, Fe, and Ni.
4. Precision is reported as the relative percent difference (RPD) between the matrix spike and matrix spike duplicate analyzed in conjunction with the sample. A notation of "NA" indicates that the RPD was not available for that sample
5. All analytes except Mercury analyzed by SW-846 Method 6010; Mercury analyzed by SW-846 Method 7470

Table D-1b. Controlled-Air Incinerator Closure Baseline Pre-Rinse Water Samples (units in mg/ℓ).

Sample ID	Sb	As	Ba	Be	Cd	Cr	Pb	Hg	Ni	Se	Ag	Tl	Precision[3]
CAI-QT-4	0.005	0.005	0.019	0.0001	0.0003	0.005	0.001	0.0004	0.008	0.005	0.001	0.003	0.0-1.5 (9.6 Hg)
CAI-AT-4	0.003	0.003	0.019	0.0003	0.0003	0.002	0.016	0.00009	0.118	0.003	0.001	0.003	0.0-2.1 (13.5 Hg)
CAI-DW-1	0.003	0.004	0.02	0.0003	0.0003	0.002	0.002	0.00006	0.052	0.003	0.001	0.003	0.4-2.0 (2.5 Hg)
CAI-DW-2	0.003	0.002	0.002	0.0001	0.0003	0.002	0.008	0.00008	0.13	0.002	0.001	0.003	0.4-2.0 (2.5 Hg)
CAI-DW-3	0.003	0.003	0.019	0.0001	0.0003	0.002	0.324	0.0003	2.18	0.002	0.001	0.003	0.4-2.0 (2.5 Hg)
MEAN	0.0034	0.0034	0.0194	0.00018	0.0003	0.0026	0.0022	0.00002	0.00138	0.003	0.001	0.003	—
STD DEV	0.00089	0.00114	0.00055	0.00011	0	0.00134	0.00110	0	0.00085	0.001225	0	0	—
UTL	0.041	0.012	0.024	0.001	0.0003	0.0126	0.01	0.00002	0.008	0.012	0.001	0.003	—
Detection Limits	0.003	0.0016	0.0001	0.0001	0.0003	0.0005	0.0012	0.00002	0.0006	0.0018	0.001	0.003	—

Adapted from original table and data supplied by Los Alamos National Laboratory

NOTES:

1. UTL = "Upper Tolerance Limit" The UTL is the compliance point, or performance standard for decontamination. The UTL is calculated from the mean and standard deviation of the baseline (background) data. It represents the 99 percent confidence interval for each analyte, beyond which the verification data is considered to be in excess of the background concentration.

2. Data QC Qualifiers "U"= Not Detected (reported as detection limit); "*" = The RPD was beyond acceptable tolorance limits for Cr, Fe, and Ni.

3. Precision is reported as the relative percent difference (RPD) between the matrix spike and matrix spike duplicate analyzed in conjunction with the sample. A notation of "NA" indicates that the RPD was not available for that sample

5. All analytes except Mercury analyzed by SW-846 Method 6010; Mercury analyzed by SW-846 Method 7470

Table D-2. Controlled-Air Incinerator Closure Final Rinsate Organics Analysis (units in μg/*l*).

Location/Type	Sample ID	bis (2-ethyl hexyl phthalate)	Isophorone	Dimethylphthalate	Aniline	4-Methylphenol	Benzoic Acid	4-Nitrophenol	Precision[2]	Acetone	Methylene Chloride	2-Butanone	Methylene Chloride	1,1,1,2 Tetrachloroethane	4-Methyl-2-Pentanone	Trans-1, 2-Dichloroethene	2-Hexanone	Carbon Disulfide	1,2,4-Trimethylbenzene	p-Isopropyltoluene	Ethylbenzene	m, p-Xylene	o-Xylene	Hexachlorobutadiene	Precision[3]
		Semivolatile Organic Compounds[5]								Volatile Organic Compounds[4]															
Pre-Wash Water	CAI-AT-4	ND	ND	ND	ND	ND	ND	ND	1-3	ND	ND	ND	ND	ND	ND	ND	ND	ND	7.2	ND	ND	ND	ND	2-11
Trip Blank	CAI-AT-6	ND	ND	ND	ND	ND	ND	ND	1-3	7.7	ND	ND	ND	ND	ND	ND	ND	ND	ND	ND	ND	ND	ND	2-11
Field Blank	CAI-AT-7	ND	ND	ND	ND	ND	ND	ND	1-3	ND	2.1	ND	ND	ND	ND	ND	ND	ND	ND	ND	ND	ND	ND	2-11
Solid Feed	CAI-SF-8	35	ND	ND	2J	3J	5J	8J	1-3	ND	2.1	ND	ND	ND	236	ND	ND	ND	ND	4	33	100	100	ND	2-11
Solid Feed	CAI-SF-10								1-3	ND	ND	ND	3.9J	ND	68	ND	ND	5.6	ND	ND	17	100	58	ND	NA
Field Blank	CAI-SF-11								NA	8.7J	ND	ND	ND	ND	ND	ND	ND	ND	ND	ND	ND	ND	ND	ND	NA
Activated Carbon	CAI-AC-4	ND	ND	ND	ND	ND	ND	ND	0-4	14,JB	ND	ND	ND	ND	ND	ND	ND	ND	ND	ND	ND	ND	ND	ND	NA
Pre-Wash Water	CAI-QT-4	2J	3J	250E	ND	ND	ND	ND	1-8	ND	ND	ND	ND	ND	ND	ND	ND	270	ND	ND	ND	ND	ND	ND	0-4
Trip Blank	CAI-QT-6	ND	ND	ND	ND	ND	ND	ND	1-8	8.4	ND	ND	ND	ND	ND	ND	ND	ND	ND	ND	ND	ND	ND	ND	0-4
Field Blank	CAI-QT-7	ND	ND	ND	ND	ND	ND	ND	1-8	ND	ND	ND	ND	ND	ND	ND	ND	ND	ND	ND	ND	ND	ND	ND	0-4
Laboratory Detection Limit		10	10	10	10	10	100	50	—	20	5	20	5	5	20	5	20	5	5	5	5	5	5	5	—

Adapted from original table and data supplied by Los Alamos National Laboratory.

NOTES:

1. Data QC Qualifiers "ND" = Not Detected; "B" = Compound was detected in laboratory blank; "J" = Estimated value; "E" = Estimated value requiring dilution.
2. Precision is reported as the relative percent difference (RPD) between the matrix spike and matrix spike duplicate analyzed in conjunction with the sample. A notation of "NA" indicates that the RPD was not available for that sample.
3. Precision for SVOC data is reported as the RPD between the blank spike and blank spike duplicate.
4. All VOCs analyzed according to SW-846 Method 8260
5. All SVOCs analyzed according to SW-846 Method 8270

Table D-3. TCLP Analysis for Controlled-Air Incinerator Closure (units in mg/*l*).

Sample ID	As	Ba	Cd	Cr	Pb	Hg	Se	Ag	Organics
CAI-QT-10	0.094	0.466	0.005	0.093	ND	ND	ND	ND	Not analyzed
CAI-HF-1	ND	0.048	0.002	0.014	ND	ND	ND	ND	Not analyzed
CAI-HF-2	ND	0.131	ND	0.011	ND	ND	ND	ND	Not analyzed
CAI-FR-1A	0.040	2.2	0.006	0.005	ND	ND	0.025	ND	No organics detected
Regulatory Limit	10	200	5	10	3	0.2	5	10	—
Detection Limits	0.0016	0.0001	0.0003	0.0005	0.0012	0.00002	0.0018	0.001	—

Adapted from original table and data supplied by Los Alamos National Laboratory

NOTE:

1. Data QC Qualifiers "ND"= Not detected

2. All samples extracted according to TCLP (Method 1311) and analyzed according to Method 6010, except Mercury, which was analyzed according to SW-846 Method 7470

Table D-4. Controlled-Air Incinerator Swipe Sampling for Non-Metallic Analytes (units in μg/swipe).

Section	Location ID	CN	PCBs	bis (2-ethyl hexyl phthalate)	Acetone	Methylene Chloride	2-Butanone	Naphthalene	1,1,1,2 Tetrachloroethane	4-Methyl-2-Pentanone	Trans-1, 2-Dichloroethene	2-Hexanone	Carbon Disulfide	1,2,4-Trimethylbenzene	Hexachlorobutadiene	1,1,1-Trichloroethane
							SVOC[5]	VOCs[6]								
Glove Box	CAI-GB-1	0.6	ND	ND	7	4.8	5.9	ND	ND	ND	ND	ND	ND	ND	ND	ND
Glove Box	CAI-GB-2	ND	ND	ND	ND	3.4	ND	ND	ND	ND	ND	ND	ND	ND	ND	ND
Glove Box	CAI-GB-3	1	ND	ND	ND	4.6	6.7	ND	ND	ND	ND	ND	ND	ND	ND	ND
Glove Box	CAI-GB-4	0.5	ND	ND	ND	4.9	ND	ND	ND	MD	ND	ND	ND	ND	ND	ND
Glove Box	CAI-GB-5	0.5	ND	ND	ND	4	ND	ND	ND	ND	ND	ND	ND	ND	ND	ND
Absorb Tower	CAI-AT-1	ND	ND	ND	5.8	2.4	ND	ND	ND	ND	ND	ND	ND	0.9J	ND	ND
Absorb Tower	CAI-AT-2	ND	ND	ND	ND	4.1	ND	ND	ND	ND	ND	ND	ND	0.8J	ND	ND
Absorb Tower	CAI-AT-3	ND	ND	ND	ND	3.4	ND	ND	ND	ND	ND	ND	ND	0.9J	ND	ND
HEPA	CAI-HP-1	0.8	ND	ND	5.6	3.6	ND	ND	ND	ND	ND	ND	ND	ND	ND	ND
HEPA	CAI-HP-2	ND	ND	181	6.7	4.9	ND	ND	ND	ND	ND	ND	ND	ND	ND	ND
HEPA	CAI-HP-3	ND	ND	ND	ND	ND	ND	ND	ND	ND	ND	ND	ND	ND	ND	ND
HEPA	CAI-HP-4	ND	ND	ND	23	4.6	6.7	24	ND	ND	ND	ND	ND	ND	ND	ND
HEPA	CAI-HP-5[1]	ND	ND	ND	2.6	5.2	ND	2.3J	3.2J	ND	ND	ND	ND	ND	ND	ND
Solid Feed	CAI-SF-1	ND	ND	ND	10	ND	37	ND	ND	16	ND	ND	ND	ND	ND	ND
Solid Feed	CAI-SF-2	ND	ND	ND	5.9	ND	ND	ND	ND	2.9	ND	ND	ND	ND	ND	ND
Solid Feed	CAI-SF-3	ND	ND	25J	5.6	ND	9.1	ND	ND	4.6J	ND	ND	ND	ND	ND	ND
Solid Feed	CAI-SF-4[1]	ND	ND	ND	ND	ND	ND	ND	ND	ND	ND	ND	ND	ND	ND	ND
Solid Feed	CAI-SF-5	NS	NS	NS	ND	20	4.6J	ND	ND	73	9.8	ND	3.1J	ND	ND	ND
Solid Feed	CAI-SF-6	NS	NS	ND	ND	ND	ND	ND	ND	ND	ND	ND	ND	ND	ND	ND
Solid Feed	CAI-SF-7[1]	NS	NS	ND	ND	ND	ND	ND	ND	ND	ND	ND	ND	ND	ND	ND
Activated Carbon	CAI-AC-1	ND	ND	94J	7.9	4.1	15	ND	ND	ND	ND	ND	ND	ND	ND	ND
Activated Carbon	CAI-AC-2	0.8	ND	33J	6.2	4.6	14	1.9J	ND	ND	ND	ND	ND	ND	ND	ND
Activated Carbon	CAI-AC-3	ND	ND	45J	8.1	4	5.2	ND	ND	ND	ND	ND	ND	ND	ND	ND
Quench Tower	CAI-QT-1	ND	ND	ND	ND	4	22	ND	ND	ND	ND	ND	ND	0.9J	ND	ND
Quench Tower	CAI-QT-2	ND	ND	ND	ND	3.5	ND	ND	ND	ND	ND	ND	ND	0.9J	ND	ND
Quench Tower	CAI-QT-3	0.6	ND	ND	ND	3.8	ND	ND	ND	ND	ND	ND	ND	0.8J	ND	ND
Exhaust	CAI-EX-1	ND	.32J	ND	5.7	7.4	5.5	ND	ND	ND	7.3	4.9J	ND	ND	ND	ND
Exhaust	CAI-EX-2	ND		ND	ND	13	ND	ND	ND	ND	12.7	ND	ND	ND	ND	ND
Exhaust	CAI-EX-3	ND	ND	ND	ND	8.4	ND	ND	ND	ND	8.4	ND	ND	ND	ND	ND
Liquid Feed	CAI-LF-1	ND	240	ND	ND	8	ND	ND	ND	ND	8.9	ND	ND	ND	ND	ND
Liquid Feed	CAI-LF-2	ND	.63J	ND	ND	5.1	ND	ND	ND	ND	5.1	ND	3.4	ND	ND	ND
Liquid Feed	CAI-LF-3	ND	1.1	ND	ND	5	10.2	ND	ND	ND	4.9J	ND	ND	ND	ND	ND
Liquid Feed	CAI-LF-4[1]	ND	ND	ND	ND	4.6	60.7	ND	ND	ND	4.5J	ND	ND	ND	ND	ND
Liquid Feed	CAI-LF-5[2]	ND	.57J	ND	ND	4.9	ND	ND	ND	ND	4.9J	ND	3.3	ND	ND	ND
Scrubber Tank	CAI-ST-1[3]	ND	ND	ND	ND	ND	ND	ND	ND	ND	ND	ND	ND	ND	ND	ND
Scrubber Tank	CAI-ST-4[4]	NS	NS	ND	ND	ND	ND	ND	ND	ND	ND	ND	ND	ND	ND	ND
Scrubber Tank	CAI-ST-5[4]	NS	NS	ND	ND	ND	ND	ND	ND	ND	ND	ND	ND	ND	ND	ND
Ash Removal	CAI-AR-1	ND	ND	ND	ND	ND	ND	ND	ND	ND	ND	ND	ND	ND	1.3J	ND
Ash Removal	CAI-AR-2	ND	ND	ND	ND	ND	ND	ND	ND	ND	ND	ND	ND	ND	ND	ND
Ash Removal	CAI-AR-3	ND	ND	ND	ND	ND	ND	ND	ND	ND	ND	ND	ND	ND	ND	ND
Ash Removal	CAI-AR-4	ND	ND	ND	ND	ND	ND	ND	ND	ND	ND	ND	ND	ND	ND	ND
Ash Removal	CAI-AR-5	ND	ND	30J	ND	ND	ND	ND	ND	ND	ND	ND	ND	ND	ND	2.1J
Laboratory Detection Limit		0.5	1	100	5	2.5	2.5	2.5	2.5	2.5	2.5	2.5	2.5	2.5		

Adapted from original table and data supplied by Los Alamos National Laboratory

NOTES:
1. Field Blanks
2. Duplicate of CAI-LF-2
3. H_20 Sample from Actual Tank
4. H_20 Blanks
5. All VOCs analyzed according to SW-846 Method 8260
6. All SVOCs analyzed according to SW-846 Method 8270

Table D-5. Controlled-Air Incinerator Swipe Sampling for Metallic Analytes (units in μg/swipe).

Section	Location ID	Antimony	Arsenic	Barium	Beryllium	Cadmium	Chromium	Lead	Mercury	Nickel	Selenium	Silver	Thallium
	Compounds	Metals[5]											
Glove Box	CAI-GB-1	12	0.25	190	0.05	0.03	68	2.9	0.01	41	0.25	0.01	0.4
Glove Box	CAI-GB-2	10	0.25	240	0.05	0.03	38	1.2	0.01	25	0.25	0.01	0.4
Glove Box	CAI-GB-3	11	0.25	210	0.05	0.1	29	1	0.01	21	0.25	0.01	0.4
Glove Box	CAI-GB-4	12	0.25	160	0.05	0.08	28	1.4	0.01	15	0.25	0.01	0.4
Glove Box	CAI-GB-5	10	0.25	180	0.05	0.03	13	0.91	0.01	10	0.25	0.01	0.4
Absorb Tower	CAI-AT-1	15	0.26	290	ND	0.44	9.3	3.7	0.018	22	ND	ND	ND
Absorb Tower	CAI-AT-2	13	0.31	270	ND	1.2	14	9.9	0.06	66	ND	0.12	ND
Absorb Tower	CAI-AT-3	10	0.13	180	ND	ND	16	1.1	0.028	59	ND	ND	ND
HEPA	CAI-HP-1	10	0.28	250	ND	0.11	31	2.5	0.69	34	ND	ND	ND
HEPA	CAI-HP-2	10	ND	160	ND	0.09	28	4	0.017	18	ND	0.16	ND
HEPA	CAI-HP-3	8.6	ND	270	ND	ND	24	0.52	ND	30	ND	ND	ND
HEPA	CAI-HP-4	8.1	ND	240	ND	0.06	9.4	1.1	0.025	7.5	ND	ND	ND
HEPA	CAI-HP-5[1]	11	ND	160	ND	ND	2.2	0.24	ND	0.64	ND	ND	ND
Solid Feed	CAI-SF-1	11	0.84	130	0.06	ND	250	3.4	0.06	59	ND[4]	ND	ND[4]
Solid Feed	CAI-SF-2	15	0.63	250	0.06	0.86	13	12	0.099	10	ND	ND	ND
Solid Feed	CAI-SF-3	25	0.91	270	0.06	0.49	31	60	0.1	17	ND[4]	ND	ND[4]
Solid Feed	CAI-SF-4[1]	10	0.13	250	0.06	ND	3.8	0.3	ND	4.6	ND	ND	ND
Solid Feed	CAI-SF-5[2]	13	ND	120	ND	ND	1.3	0.25	ND	0.26	ND	ND	ND
Solid Feed	CAI-SF-6												
Solid Feed	CAI-SF-7[3]												
Activated Carbon	CAI-AC-1	11	1.5	200	0.08	0.48	62	26	3.1	100	0.36	0.19	ND
Activated Carbon	CAI-AC-2	9.3	0.54	170	ND	0.14	31	7.3	5.2	38	ND	ND	ND
Activated Carbon	CAI-AC-3	9.5	0.27	170	ND	0.2	53	3.8	0.026	44	ND	ND	ND
Quench Tower	CAI-QT-1	13	ND	240	ND	0.24	7.9	2.6	0.015	25	ND	ND	ND
Quench Tower	CAI-QT-2	12	ND	260	ND	0.33	5.4	3.2	0.019	10	ND	ND	ND
Quench Tower	CAI-QT-3[3]	107	1.3	200	0.15	6.4	4.6	180	ND	2.9	ND	ND	ND
Exhaust	CAI-EX-1	11	0.34	110	ND	ND	13	2.3	ND	8.1	ND	ND	ND
Exhaust	CAI-EX-2	9.1	ND	130	ND	ND	1.5	0.59	ND	0.6	ND	ND	ND
Exhaust	CAI-EX-3	9	ND	110	ND	ND	1.4	0.51	ND	1.2	ND	ND	ND
Liquid Feed	CAI-LF-1	11	ND	100	ND	ND	0.59	0.25	ND	ND	ND	ND	ND
Liquid Feed	CAI-LF-2	12	ND	140	ND	ND	3.8	0.57	ND	2.1	ND	ND	ND
Liquid Feed	CAI-LF-3	11	ND	130	ND	0.06	2.3	0.77	ND	1	ND	ND	ND
Liquid Feed	CAI-LF-4[1]	10	ND	98	ND	ND	0.45	0.21	ND	ND	ND	ND	ND
Duplicate of LF-2	CAI-LF-5	13	ND	120	ND	ND	4.7	0.71	ND	2.8	ND	ND	ND
Ash Removal	CAI-AR-1	11.3	0.47	184	0.05	1.1	320	75.6	0.08	156	0.36	0.1	0.4
Ash Removal	CAI-AR-2	11.2	0.28	220	0.05	0.1	7.7	2	0.01	4.8	0.33	0.1	0.4
Ash Removal	CAI-AR-3	8.8	0.32	177	0.05	0.07	10.5	2.5	0.01	6.4	0.25	0.1	0.4
Ash Removal	CAI-AR-4	9.1	0.25	191	0.05	0.12	54	7.5	0.01	34	0.25	0.1	0.4
Ash Removal	CAI-AR-5	10.4	0.25	233	0.05	0.05	0.66	0.2	0.01	0.23	0.25	0.1	0.4
Laboratory Detection Limit		0.25	0.25	0.25	0.05	0.05	0.05	0.15	0.01	0.1	0.25	0.1	0.4

Adapted from original table and data supplied by Los Alamos National Laboratory

NOTES:
1. Field Blanks
2. DECON
3. Swipe of refractory at end of hot duct.
4. For these two samples, the detection limits were 10x higher than the reporting limits listed.
5. All analytes except Mercury analyzed by SW-846 Method 6010; Mercury analyzed by SW-846 Method 7470

Appendix E

Manifests

TA-50 C.A.I. WASTE DESTINATION LOG

PALLET NO.	DESCRIPTION	DESTINATION	REMARKS
1	BLUE PVC AIR LINE		
2	GAS LINE (Fe)	ACE METALS	
3	3EA VALVES 2EA FAN		
4	~~NA~~ GAS LINE (Fe)	ACE METALS	
5	3EA DUCT (SS)	ACE METALS	
6	8EA DUCT (SS.)	ACE METALS	
7	SECONDARY COOLING (SS)	ACE METALS	
8	STEAM PIPE & GAS PIPE (Fe)	ACE METALS	
9	HASTALOY PIPE	HOT DUMPS	SMEARS > TABLE 2-2
10	CONDENSATE LINES	NOT METALS	
11	LAMPS & DECK RAIL	ACE METALS	
12	GAS / VENT LINES	ACE METALS	
13	Misc Valves		
14	Misc Valves		
15	2EA VALVES BLACK IRON PIPE		
COOLING WATER TANK ?	TANK SECONDARY	ACE METALS	HPR #26772
COOLING WATER TANK MOUNT	MOUNT FOR TANK	ACE METALS	
	HEAT EXCHANGER		HPR # ~~23762~~ 7014
16	GAS & VENT LINE		
17	WORK STAND		

DURATEK

Fax Cover

To: Chris Reno, SEG 423-376-8484

From: Troy Eshleman
GTS Duratek. Inc.
901 18th Street Suite 215
Los Alamos, NM 87544
(505) 662-1329
Fax: 661-9699

Date: 28 May 1997

Pages: 7

Chris.

Please forward to Tracy. If there are any questions contact me at 505-470-4938 (mobile).

Troy

SCIENTIFIC ECOLOGY GROUP, INC.

THREE-DAY ADVANCE NOTIFICATION FORM

SEG SHIPMENT #: _____

SHIPMENT INFORMATION

Client: Los Alamos National Laboratory
Client Contact: Keith Rendell
Client Phone: ~~665~~ 505-665-1054
Client Manifest #: TA-50-1-97
TN License #: T-NM002-L97 (Sherman)
Burial site: P/R
Burial Site Permit Generator #: P/R
Contract/Purchase Order #: 3566V0015-8N
Scheduled ETA: _____

Carrier: HTS

(FLATBED) VAN RAGTOP DROPDECK
OTHER _____

RADIOLOGICAL ISOTOPIC INFORMATION

U-233	—	grams
U-235	—	grams
U-238	—	mCi
Pu	0.0225	mCi
Am-241	0.00321	mCi
Ra	—	mCi
Sr90	—	mCi
C14	—	mCi
H3	—	mCi

Total SNM grams 0.000000 2

Maximum On-Contact Radiation Levels (mR/hr):
External: <0.1
Internal: <0.1

Total Source Lbs. Ø

TOTAL ACTIVITY (mCi) 0.0257

BURIAL SITE: EVC SC WA NTS HR (P/R)

WASTE CLASS: (A) B C

PACKAGE(S) & QUANTITY INFORMATION

QTY/CONTAINER TYPE
Other
____ 30 gallon drums
____ 55 gallon drums
____ metal bins (___ ft³)
____ wood boxes (___ ft³)
1 ~~2~~ 20' seatainds
____ 40' seatainds
____ fuel rack
____ resin liner/HIC
____ oil bins
____ equipment
Advanced notification required for all shipments (including equipment)

SEG CONTAINER #(S)
(S/L, OIL BINS, REC., ETC.)
RM224 (15 Ton)
~~RM227 (14 Ton)~~
TLE 5-28-97

HEAVIEST CONTAINER WT. (LBS) 30 000

• ____ Asbestos ____ ft³ • ____ Lead ____ lbs ____ ft³
____ Rubber ____ Soil • ____ Glass ____ Ash
____ Blasting Grit • ____ Hot Particles ____ Vermiculite
____ Bldg. Rubble ____ HEPA Filters ____ Insulation
____ Paper ____ Cloth • ____ Sources ____ Biological
X Plastic X Wood X Metal ____ Concrete
____ Carcasses ____ Oil** • ____ Irradiated Metal
____ Sewage (Sludge Treated) ____ Grease**
• ____ Aqueous Liquid (Bulk or Absorbed)** • ____ Sludge
• ____ Liquid Filters: Are filters segregated? Yes ____ No ____
Are separate isotopes enclosed? Yes ____ No ____
• ____ Resin: Bead ____ Powdex ____ Mixed powdex/bead ____
% anion ____ % cation ____
Manufacturer: _____

FINAL MANIFEST MUST BE RECEIVED AT SEG PRIOR TO SHIPMENT FROM CUSTOMER SITE.

Processing and any special or additional instructions noted on reverse side.

• ADDITIONAL INFORMATION MAY BE REQUIRED BY SEG

** SEPARATE ISOTOPIC ANALYSIS AND RCRA NON-HAZARDOUS CERTIFICATION REQUIRED

→ THIS BLOCK COMPLETED BY SEG

☐ Advanced Notification Complete and Acceptable
☐ Advanced Notification Received after Shipment Released
☐ Meets our License Requirements
☐ Meets WAC for _____ (Primary Facility)
☐ Does not meet WAC
If not, Approved By: _____

Fax # 423-376-8484
Confirmation #'s
423-376-8015 or 423-376-8101
If Advanced Notification is faxed, confirmation must be made that load is acceptable

PREPARED BY: Keith Rendell DATE: 5/28/97 TIME: 1:30 am (pm)

SEG PROPRIETARY

SCIENTIFIC ECOLOGY GROUP, INC.

ADVANCE NOTIFICATION FORM (Continued)

PROCESSING INSTRUCTIONS

CLIENT LOS ALAMOS NATIONAL LABORATORY

CLIENT MANIFEST # TA-50-1-97 SEG SHIPMENT #

SPECIAL ADDITIONAL INSTRUCTIONS:

MATERIALS ARE PART OF A RCRA CLOSURE. PLEASE RECORD AND REPORT DATE RECYCLED AND REUSE LOCATION.

Metal Shipment Container Information

Incoming Metal
Section I - Metal Types & Percents

Carbon	20 %
Stainless	80 %
Cast	%
Aluminum	%
Copper	%
Galvanized/Tin	%
Brass/Bronze	%
Other (specify)	%
100	%

Processed Reusable

Metal Mod	Design
110	
100	

Incoming Lead
Section I - Metal Types & Percents

Sheet	%
Brick	%
Elements	%
Pigs	%
Shot	%
Other (specify)	100 %

Est. Avg. Contamination (Smears/sec)

Section II - Configuration & Size

Description	% of Load	Components of large pieces Length	Height	Width	Comments
Machinery or Assembled Parts		8'	2'	2'	
Tanks					
Structural Steel Thick welded plate (Metal>0.25" thick)		12'	2'	2'	
Misc. thin gauge metal Ex. fencing, cladding, siding etc. <0.25" thick		6'	4'	4'	
Totals	100%				

Section III - Non metal Miscellaneous

	Yes	No
1. Packaging Materials Are wastes individually wrapped? Estimated lbs. of shipping	✓*	
2. Are hazardous materials bonded to metal? If yes explain give brief explanation		

* Contaminated Pieces ONLY

Section IV - Other Comments

* DRIVER CONTACT: TROY ESHLEMAN
505 470 4938

© Copyright 1990 & Published by J. J. KELLER & ASSOCIATES, INC. • 145 West Wisconsin Ave. • P.O. Box 548 • Neenah, Wisconsin 54957-0548

CONTAINS HAZARDOUS MATERIALS

STRAIGHT BILL OF LADING
ORIGINAL - NOT NEGOTIABLE

Shipper's No.

CARRIER: Hittman Trans Ser Inc. SCAC

Carrier's No.
Date

TO:
Consignee Scientific Ecology Group
Street 1560 Bear Creek Road
Destination Oakridge, TN Zip 37830

FROM:
Shipper Los Alamos National Laboratory
Street P.O. Box 1663
Origin Los Alamos NM Zip 87545

Route:

Vehicle Number

No. Shipping Units	HM	Kind of Packaging, Description of Articles (IF HAZARDOUS MATERIALS - PROPER SHIPPING NAME)	HAZARD CLASS	I.D. Number	WEIGHT (Subject to Correction)	RATE	LABELS REQUIRED
1	X	Radioactive Material, Surface	7	UN2913	15 Tons		
		Contaminated Object					
		(1 - Sealand Container)					
		SCO-I					
		Total Radionuclides: Pu-241 - 2.25×10^{-7} g - 2.25×10^{-5} Ci - 8.33×10^{-7} TBq					
		Am-241 - 15.75×10^{-7} g - 3.21×10^{-6} Ci - 1.19×10^{-7} TBq					
		ERG # 162					
		This shipment is subject to the Exclusive use provision of 49CFR 173.427 (6),					
		Exclusive use must be maintained throughout the course of this shipment.					

Remit C.O.D. to:
Address:
City: State: Zip:

COD Amt: $

C.O.D. FEE:
Prepaid ☐
Collect ☐ $

NOTE — Where the rate is dependent on value, shippers are required to state specifically in writing the agreed or declared value of the property. The agreed or declared value of the property is hereby specifically stated by the shipper to be not exceeding $ Per

Subject to Section 7 of the conditions, if this shipment is to be delivered to the consignee without recourse on the consignor, the consignor shall sign the following statement:
The carrier shall not make delivery of this shipment without payment of freight and all other lawful charges.
Signature of Consignor

FREIGHT CHARGES
☐ PREPAID ☐ COLLECT

RECEIVED, subject to the classifications and lawfully filed tariffs in effect on the date of issue of this Bill of Lading, the property described above in apparent good order, except as noted (contents and condition of contents of packages unknown), marked, consigned, and destined as indicated above which said carrier (the word carrier being understood throughout this contract as meaning any person or corporation in possession of the property under the contract) agrees to carry to its usual place of delivery at said destination, if on its route, otherwise to deliver to another carrier on the route to said destination. It is mutually agreed, as to each carrier of all or any of said property over all or any portion of said route to destination and as to each party at any time interested in all or any said property, that every service to be performed hereunder shall be subject to all the terms and conditions in the governing classification on the date of shipment.
Shipper hereby certifies that he is familiar with all the bill of lading terms and conditions in the governing classification and the said terms and conditions are hereby agreed to by the shipper and accepted for himself and his assigns.

This is to certify that the above-named materials are properly classified, described, packaged, marked and labeled and are in proper condition for transportation according to the applicable regulations of the Department of Transportation.
Per

PLACARDS SUPPLIED: Radioactive

PLACARDS REQUIRED: ☒ YES ☐ NO — FURNISHED BY CARRIER
DRIVER SIGNATURE:

SHIPPER: Chemical Waste Management Inc
PER: Gary Sherman
DATE: 5-28-97

CARRIER:
PER:
DATE:

EMERGENCY RESPONSE TELEPHONE NUMBER: (505) 667-6211

Monitored at all times the Hazardous Material is in transportation including storage incidental to transportation (172.604).

LBL-B3
Rev. 8/90

CONTAINS HAZARDOUS MATERIALS

SCIENTIFIC ECOLOGY GROUP, INC.

THREE-DAY ADVANCE NOTIFICATION FORM

SEG SHIPMENT #: _____

SHIPMENT INFORMATION

Client: Los Alamos National Laboratory
Client Contact: Keith Rendell
Client Phone: 505 665 1054
Client Manifest #: TA-50-1-97
TN License #: T-NM002-497 (Sherman)
Burial site: P/R
Burial Site Permit Generator #: P/R
Contract/Purchase Order #: 3566V00 15-8N
Scheduled ETA: _____

Carrier: HTS

(FLATBED) VAN RAGTOP DROPDECK
OTHER _____

RADIOLOGICAL/ISOTOPIC INFORMATION

U-233	_____	grams
U-235	_____	grams
U-238	_____	mCi
Pu	0.0225	mCi
Am-241	0.0032	mCi
Ra	_____	mCi
Sr90	_____	mCi
C14	_____	mCi
H3	_____	mCi
Total SNM grams	8×10^{-7}	

Maximum On-Contact Radiation Levels (mR/hr):
External <0.1
Internal <0.1

Total Source Lbs. Ø

TOTAL ACTIVITY (mCi) 0.0257

BURIAL SITE: EVC SC WA NTS HR (P/R)

WASTE CLASS: (A) B C

PACKAGE(S) & QUANTITY INFORMATION

QTY/CONTAINER TYPE
Other
_____ 30 gallon drums
_____ 55 gallon drums
_____ metal bins (___ ft³)
_____ wood boxes (___ ft³)
_1_ 20' sealands
_____ 40' sealands
_____ fuel rack
_____ resin liner/HIC
_____ oil bins
_____ equipment
Advanced notification required for all shipments (including equipment)

SEG CONTAINER #(S) (S/L, OIL BINS, REC., ETC.)
RM227 (14 tons)

HEAVIEST CONTAINER WT. (LBS) 28,000

*___Asbestos _____ ft³ *_____Lead _____ lbs _____ ft³
___Rubber ___Soil *_____Glass ___Ash
___Blasting Grit *___Hot Particles ___Vermiculite
___Bldg. Rubble ___HEPA Filters ___Insulation
___Paper ___Cloth *___Sources ___Biological
_X_Plastic _X_Wood _X_Metal ___Concrete
___Carcasses ___Oil** *___Irradiated Metal
___Sewage (Sludge Treated) ___Grease**
*___Aqueous Liquid (Bulk or Absorbed)** *___Sludge
*___Liquid Filters: Are filters segregated? Yes___No___
Are separate isotopes enclosed? Yes___No___
*___Resin: Bead___Powdex___Mixed powdex/bead___;
% anion___ % cation___
Manufacturer: _____

FINAL MANIFEST MUST BE RECEIVED AT SEG PRIOR TO SHIPMENT FROM CUSTOMER SITE.

Processing and any special or additional instructions noted on reverse side.

* ADDITIONAL INFORMATION MAY BE REQUIRED BY SEG

** SEPARATE ISOTOPIC ANALYSIS AND RCRA NON-HAZARDOUS CERTIFICATION REQUIRED

→THIS BLOCK COMPLETED BY SEG

☐ Advanced Notification Complete and Acceptable
☐ Advanced Notification Received after Shipment Released
☐ Meets our License Requirements
☐ Meets WAC for _____ (Process/Facility)
☐ Does not meet WAC
If not, Approved By: _____

Fax # 423-376-8484
Confirmation #'s
423-376-8015 or 423-376-8101
If Advanced Notification is faxed, confirmation must be made that load is acceptable

PREPARED BY: [signature] FOR KEITH RENDELL DATE: 5/28/97 TIME: 5:08 am (pm)

Rev 0

ADVANCE NOTIFICATION FORM (Continued)

PROCESSING INSTRUCTIONS

CLIENT LOS ALAMOS NATIONAL LABORATORY

CLIENT MANIFEST # TA-50-1-97 SEG SHIPMENT #

SPECIAL ADDITIONAL INSTRUCTIONS:

MATERIALS ARE PART OF A RCRA CLOSURE. PLEASE RECORD AND REPORT DATE RECYCLED AND REUSE LOCATION

Metal Shipment Container Information

Weighing Metal

Section I - Metal Types & Percentages

Carbon	20 %
Stainless	80 %
Cast	%
Aluminum	%
Copper	%
Galvanized Tin	%
Brass/Bronze	%
Other (specify)	%
100	%

Processing Procedures

Metal Mod	Cases
HO	
100	

Weighing Lead

Section I - Metal Types & Percentages

Sheet	%
Brick	%
Blankets	%
Pigs	%
Shot	%
Other (specify)	100 %

Est. Avg. Contamination (Specifies)

Section II - Configuration & Size

Description	% of Load	Dimensions of Large Pieces: Length	Height	Width	Comments
Machinery or Assembled Parts		8'	2'	2'	
Tanks					
Structural Metal: Thick walled pipe Measured 25" thick		12'	2'	2'	
Metal, Pipe (single walled) Est. Average, commonly seen est. <0.25" thick		6'	4'	4'	
Totals	100%				

Section III - Non Metal Materials

	Yes	No
1. Packaging Materials: Are boxes distinguishable containers? Estimate no. of shipping	✓*	
2. Are non-metals bonded to metal? If yes please give brief explanation		

* Contaminated Pieces ONLY

Section IV - Other Comments

* DRIVER CONTACT: TROY ESHLEMAN
505 470 4938

© Copyright 1996 & Published by: J. J. KELLER & ASSOCIATES, INC. © 145 West Wisconsin Ave. © P.O. Box 548 © Neenah, Wisconsin 54957-0548

CONTAINS HAZARDOUS MATERIALS

STRAIGHT BILL OF LADING
ORIGINAL - NOT NEGOTIABLE

Shipper's No.

CARRIER: Hittman Trans. Ser. Inc. SCAC Carrier's No. Date

TO:
Consignee Scientific Ecology Group
Street 1560 Bear Creek Road
Destination Oakridge, TN Zip 37830

FROM:
Shipper Los Alamos National Laboratory
Street P.O. Box 1663
Origin Los Alamos, NM Zip 87545

Route:

Vehicle Number

No. Shipping Units	HM	Kind of Packages, Description of Articles (IF HAZARDOUS MATERIALS - PROPER SHIPPING NAME)	HAZARD CLASS	ID Number	WEIGHT (Subject to Correction)	RATE	LABELS REQUIRED (If exempt, state)
1	x	Radioactive Material, Surface	7	UN2913	14 Tons		
		Contaminated Object					
		(1- Sealand Container)					
		SCO-I					
		Total Radionuclides: Pu-241 - 2.25×10^{-7} g - 2.25×10^{-5} Ci - 8.33×10^{-7} TBq					
		Am-241 - 15.75×10^{-7} g - 3.21×10^{-6} Ci - 1.19×10^{-7} TBq					
		Eng # 162					
		This shipment is subject to the Exclusive use provision of 49 CFR 173.427 (6),					
		Exclusive use must be maintained throughout the course of this shipment.					

Remit C.O.D. to:
Address:
City: State: Zip:

COD Amt: $

C.O.D. FEE: Prepaid ☐ Collect ☐ $

NOTE — Where the rate is dependent on value, shippers are required to state specifically in writing the agreed or declared value of the property. The agreed or declared value of the property is hereby specifically stated by the shipper to be not exceeding $ Per

FREIGHT CHARGES ☐ PREPAID ☐ COLLECT

RECEIVED, subject to the classifications and lawfully filed tariffs in effect on the date of issue of this Bill of Lading, the property described above in apparent good order, except as noted (contents and condition of contents of packages unknown), marked, consigned, and destined as indicated above which said carrier (the word carrier being understood throughout this contract as meaning any person or corporation in possession of the property under the contract) agrees to carry to its usual place of delivery at said destination, if on its route, otherwise to deliver to another carrier on the route to said destination. It is mutually agreed, as to each carrier of all or any of said property over all or any portion of said route to destination and as to each party at any time interested in all or any said property, that every service to be performed hereunder shall be subject to all the terms and conditions of the governing classifications on the date of shipment.
Shipper hereby certifies that he is familiar with all the bill of lading terms and conditions in the governing classification and the said terms and conditions are hereby agreed to by the shipper and accepted for himself and his assigns.

This is to certify that the above-named materials are properly classified, described, packaged, marked and labeled and are in proper condition for transportation according to the applicable regulations of the Department of Transportation. Per

PLACARDS SUPPLIED Radioactive PLACARDS REQUIRED ☒ YES ☐ NO — FURNISHED BY CARRIER
DRIVER SIGNATURE:

SHIPPER: Chemical Waste Management Inc.
PER: Larry Sherman
DATE: 5-28-97

CARRIER:
PER:
DATE:

EMERGENCY RESPONSE TELEPHONE NUMBER: (505) 667-6211

Monitored at all times the Hazardous Material is in transportation including storage incidental to transportation (172.604).

CONTAINS HAZARDOUS MATERIALS

SCIENTIFIC ECOLOGY GROUP, INC.

Monday, June 30, 1997

Miguel Salazar
Los Alamos National Labs

Los Alamos, NM.

Dear Mr Salazar:

In compliance with the requirements of 10 CFR 20, Appendix F, Section III, C.1, the attached signed shipping manifest copies are your notice of receipt and acceptance of the radioactive waste materials specified on the manifests.

Manifest Number	Date Received
1777-TA-50-1-97-1	06/02/1997

This is acknowledgement of receipt only. Any manifest discrepancies found during manifest review, unloading or processing will be listed on page 2 of this letter.

Thank you for your business.

Sincerely,

T. Fred Schulz
Supervisor
Shipping and Receiving

TFS/cst
Attachment

cc: Tracking Systems, SEG

1 of 2

SCIENTIFIC ECOLOGY GROUP, INC.

THREE-DAY ADVANCE NOTIFICATION FORM

SEG SHIPMENT #: _____

SHIPMENT INFORMATION

Client: Los Alamos National Laboratory
Client Contact: Keith Rendell
Client Phone: ~~665~~ 505-665-1054
Client Manifest #: TA-50-1-97
TN License #: T-NM002-L97 (SHERMAN)
Burial site: P/R
Burial Site Permit Generator #: P/R
Contract/Purchase Order #: 356GV0015-8N
Scheduled ETA: _____

Carrier: HTS

(FLATBED) VAN RAGTOP DROPDECK
OTHER _____

RADIOLOGICAL/ISOTOPIC INFORMATION

U-233	—	grams
U-235	—	grams
U-238	—	mCi
Pu	0.0225	mCi
Am-241	0.00321	mCi
Ra	—	mCi
Sr90	—	mCi
C14	—	mCi
H3	—	mCi

Total SNM grams 0.000000 2

Maximum On-Contact Radiation Levels (mR/hr):
External <0.1
Internal <0.1

Total Source Lbs. Ø

TOTAL ACTIVITY (mCi) 0.0257

BURIAL SITE: EVC SC WA NTS HR (P/R)

WASTE CLASS: (A) B C

PACKAGE(S) & QUANTITY INFORMATION

QTY/CONTAINER TYPE
Other
____ 30 gallon drums
____ 55 gallon drums
____ metal bins (___ ft³)
____ wood boxes (___ ft³)
1 2 20' sealands
____ 40' sealands
____ fuel rack
____ resin liner/HIC
____ oil bins
____ equipment
Advanced notification required for all shipments (including equipment)

SEG CONTAINER #(S) (S/L, OIL BINS, REC., ETC.)
RM224 (15 Ton)
~~RM227 (14 Ton)~~
238 TLE 5-28-97

HEAVIEST CONTAINER WT. (LBS) 30,000

• ____ Asbestos ____ ft³ • ____ Lead ____ lbs ____ ft³
____ Rubber ____ Soil • ____ Glass ____ Ash
____ Blasting Grit • ____ Hot Particles ____ Vermiculite
____ Bldg. Rubble ____ HEPA Filters ____ Insulation
____ Paper ____ Cloth • ____ Sources ____ Biological
X Plastic X Wood X Metal ____ Concrete
____ Carcasses ____ Oil** • ____ Irradiated Metal
____ Sewage (Sludge Treated) ____ Grease**
• ____ Aqueous Liquid (Bulk or Absorbed)** • ____ Sludge
• ____ Liquid Filters: Are filters segregated? Yes ____ No ____
Are separate isotopes enclosed? Yes ____ No ____
• ____ Resin: Bead ____ Powdex ____ Mixed powdex/beads ____
% anion ____ % cation ____
Manufacturer: _____

FINAL MANIFEST MUST BE RECEIVED AT SEG PRIOR TO SHIPMENT FROM CUSTOMER SITE

Processing and any special or additional instructions noted on reverse side.

• ADDITIONAL INFORMATION MAY BE REQUIRED BY SEG

** SEPARATE ISOTOPIC ANALYSIS AND RCRA NON-HAZARDOUS CERTIFICATION REQUIRED

→ THIS BLOCK COMPLETED BY SEG

- ☐ Advanced Notification Complete and Acceptable
- ☐ Advanced Notification Received after Shipment Released
- ☐ Meets our License Requirements
- ☐ Meets WAC for _____ (Process Facility)
- ☐ Does not meet WAC
  If not, Approved By: _____

Fax # 423-376-8484
Confirmation #'s
423-376-8015 or 423-376-8101
If Advanced Notification is faxed, confirmation must be made that load is acceptable

PREPARED BY: Keith Rendell DATE: 5/23/97 TIME: 1:30 am (pm)

SEG PROPRIETARY

SCIENTIFIC ECOLOGY GROUP, INC.

ADVANCE NOTIFICATION FORM (Continued)

PROCESSING INSTRUCTIONS

CLIENT Los Alamos National Laboratory

CLIENT MANIFEST # TA-50-1-97 SEG SHIPMENT #

SPECIAL/ ADDITIONAL INSTRUCTIONS:

MATERIALS ARE PART OF A RCRA CLOSURE. PLEASE RECORD AND REPORT DATE RECYCLED AND REUSE LOCATION.

Metal Shipment Container Information

Weathering Metals
Section I - Metals Types & Percents

Carbon	20 %
Stainless	80 %
Cast	%
Aluminum	%
Copper	%
Galvanized/Tin	%
Brass/Bronze	%
Other (specify)	%
100	%

Processed Requested

Metals Mod	Carbon
100	
100	

Weathering Lead
Section I - Metals Types & Percents

Sheet	%
Brick	%
Bismuth	%
Pigs	%
Shot	%
Other (specify) 100	%

Est. Avg. Contamination (Smears/dm)

Section II - Configuration & Size

Description	% of Load	Dimensions of large pieces: Length	Height	Width	Comments
Machinery or Assembled Parts		8'	2'	2'	
Tanks					
Structural Steel: Thick walled pipe, Material 0.25" thick		12'	2'	2'	
Misc. Thin gauge items: Est. housing, cabinets, siding etc. <0.25" thick		6'	4'	4'	
Totals	100%				

Section III - Non metal Miscellaneous

	Yes	No
1. Packaging Material: Are excess individually wrapped? Estimated lbs. of shipping	✓*	
2. Are recyclables bundled or metal? If yes excess gross total contamination		

* Contaminated Pieces ONLY

Section IV - Other Comments

* DRIVER CONTACT: TROY ESHLEMAN
505 470 4938

SEG PROPRIETARY

© Copyright 1990 & Published by: J. J. KELLER & ASSOCIATES, INC. • 145 West Wisconsin Ave. • P.O. Box 368 • Neenah, Wisconsin 54957-0368

CONTAINS HAZARDOUS MATERIALS

STRAIGHT BILL OF LADING
ORIGINAL - NOT NEGOTIABLE

Shipper's No. TA-50-1-97-1

Carrier's No.
Date

CARRIER: Hittman Trans. Ser. Inc. SCAC

TO:
Consignee Scientific Ecology Group
Street 1560 Bear Creek Road
Destination Oakridge, TN Zip 37830

FROM:
Shipper Los Alamos National Laboratory
Street P.O. Box 1663
Origin Los Alamos, NM Zip 87545

Route:

Vehicle Number

No. Shipping Units	HM	Kind of Packages, Description of Articles (IF HAZARDOUS MATERIALS - PROPER SHIPPING NAME)	HAZARD CLASS	I.D. Number	WEIGHT (subject to correction)	RATE	LABELS REQUIRED (or exemption)
1	x	Radioactive Material, Surface	7	UN2913	14 Tons		
		Contaminated Object					
		(1- Sealand Container)					
		SCO-I					
		Total Radionuclides: Pu-241 - 2.25×10^{-7} g = 2.25×10^{-5} Ci - 8.33×10^{-7} TBq					
		Am-241 - 15.75×10^{-7} g - 3.21×10^{-6} Ci - 1.19×10^{-7} TBq					
		Eng # 162					
		This shipment is subject to the Exclusive use provision of 49 CFR 173.427 (6),					
		Exclusive use must be maintained throughout the course of this shipment,					

Remit C.O.D. to:
Address:
City: State: Zip:

COD Amt: $

C.O.D. FEE:
Prepaid ☐
Collect ☐ $

NOTE — Where the rate is dependent on value, shippers are required to state specifically in writing the agreed or declared value of the property. The agreed or declared value of the property is hereby specifically stated by the shipper to be not exceeding $ Per

Subject to Section 7 of the conditions, if this shipment is to be delivered to the consignee without recourse on the consignor, the consignor shall sign the following statement:
The carrier shall not make delivery of this shipment without payment of freight and all other lawful charges.
(Signature of Consignor)

FREIGHT CHARGES
☐ PREPAID ☐ COLLEC

RECEIVED, subject to the classifications and lawfully filed tariffs in effect on the date of issue of this Bill of Lading, the property described above in apparent good order, except as noted (contents and condition of contents of packages unknown), marked, consigned and destined as indicated above which said carrier (the word carrier being understood throughout this contract as meaning any person or corporation in possession of the property under the contract) agrees to carry to its usual place of delivery at said destination, if on its route, otherwise to deliver to another carrier on the route to said destination. It is mutually agreed as to each carrier of all or any of, said property over all or any portion of said route to destination and as to each party at any time interested in all or any said property, that every service to be performed hereunder shall be subject to all the bill of lading terms and conditions in the governing classification on the date of shipment.
Shipper hereby certifies that he is familiar with all the bill of lading terms and conditions in the governing classification and the said terms and conditions are hereby agreed to by the shipper and accepted for himself and his assigns.

This is to certify that the above-named materials are properly classified, described, packaged, marked and labeled and are in proper condition for transportation according to the applicable regulations of the Department of Transportation
Per

PLACARDS SUPPLIED Radioactive PLACARDS REQUIRED ☒ YES ☐ NO — FURNISHED BY CARRIER
DRIVER SIGNATURE:

SHIPPER: Chemical Waste Management, Inc
PER: Larry Sherman
DATE: 5-28-97

CARRIER: Hittman
PER: [illegible]
DATE: 5-29-97

EMERGENCY RESPONSE TELEPHONE NUMBER: (505) 667-6211

Monitored at all times the Hazardous Material is in transportation including storage incidental to transportation (172.604).

CONTAINS HAZARDOUS MATERIALS

SCIENTIFIC ECOLOGY GROUP, INC.

Monday, June 30, 1997

Miguel Salazar
Los Alamos National Labs

Los Alamos, NM.

Dear Mr Salazar:

In compliance with the requirements of 10 CFR 20, Appendix F, Section III, C.1, the attached signed shipping manifest copies are your notice of receipt and acceptance of the radioactive waste materials specified on the manifests.

Manifest Number	Date Received
1777-TA-50-1-97-2	06/02/1997

This is acknowledgement of receipt only. Any manifest discrepancies found during manifest review, unloading or processing will be listed on page 2 of this letter.

Thank you for your business.

Sincerely,

T. Fred Schulz
Supervisor
Shipping and Receiving

TFS/cst
Attachment

cc: Tracking Systems, SEG

SCIENTIFIC ECOLOGY GROUP, INC.

THREE-DAY ADVANCE NOTIFICATION FORM

SEG SHIPMENT #: _____

SHIPMENT INFORMATION

Client: Los Alamos National Laboratory
Client Contact: Keith Rendell
Client Phone: 505 665 1054
Client Manifest #: TA-50-1-97
TN License #: T-NM002-L97 (Sherman)
Burial site: P/R
Burial Site Permit/Generator #: P/R
Contract/Purchase Order #: 35G6V00 15-8N
Scheduled ETA: _____

Carrier: HTS

(FLATBED) VAN RAGTOP DROPDECK
OTHER _____

RADIOLOGICAL/ISOTOPIC INFORMATION

U-233	_____	grams
U-235	_____	grams
U-238	_____	mCi
Pu	0.0225	mCi
Am-241	0.00321	mCi
Ra	_____	mCi
Sr90	_____	mCi
C14	_____	mCi
H3	_____	mCi
Total SNM grams	2×10^{-7}	

Maximum On-Contact Radiation Levels (mR/hr):
External <0.1
Internal <0.1

Total Source Lbs. Ø

TOTAL ACTIVITY (mCi) 0.0257

BURIAL SITE: EVC SC WA NTS HR (P/R)

WASTE CLASS: (A) B C

PACKAGE(S) & QUANTITY INFORMATION

QTY/CONTAINER TYPE	SEG CONTAINER #(S) (S/L, OIL BINS, REC., ETC.)
Other	
____ 30 gallon drums	
____ 55 gallon drums	
____ metal bins (___ ft³)	
____ wood boxes (___ ft³)	
1 20' sealands	Rm227 (14 tons)
____ 40' sealands	
____ fuel rack	
____ resin liner/HIC	
____ oil bins	
____ equipment	
Advanced notification required for all shipments (including equipment)	HEAVIEST CONTAINER WT. (LBS) 28,000

• ____ Asbestos ____ ft³ • ____ Lead ____ lbs ____ ft³
____ Rubber ____ Soil • ____ Glass ____ Ash
____ Blasting Grit • ____ Hot Particles ____ Vermiculite
____ Bldg. Rubble ____ HEPA Filters ____ Insulation
____ Paper ____ Cloth • ____ Sources ____ Biological
X Plastic X Wood X Metal ____ Concrete
____ Carcasses ____ Oil** • ____ Irradiated Metal
____ Sewage (Sludge Treated) ____ Grease**
• ____ Aqueous Liquid (Bulk or Absorbed)** • ____ Sludge
• ____ Liquid Filters: Are filters segregated? Yes ____ No ____
Are separate isotopes enclosed? Yes ____ No ____
• ____ Resin: Bead ___ Powdex ___ Mixed powdex/bead ___ ;
% anion ____ % cation ____
Manufacturer: _____

FINAL MANIFEST MUST BE RECEIVED AT SEG PRIOR TO SHIPMENT FROM CUSTOMER SITE.

Processing and any special or additional instructions noted on reverse side.

• ADDITIONAL INFORMATION MAY BE REQUIRED BY SEG

** SEPARATE ISOTOPIC ANALYSIS AND RCRA NON-HAZARDOUS CERTIFICATION REQUIRED

→THIS BLOCK COMPLETED BY SEG

- ☐ Advanced Notification Complete and Acceptable
- ☐ Advanced Notification Received after Shipment Released
- ☐ Meets our License Requirements
- ☐ Meets WAC for _____ (Process/Facility)
- ☐ Does not meet WAC
  If not, Approved By: _____

Fax # 423-376-8484
Confirmation #'s
423-376-8015 or 423-376-8101
If Advanced Notification is faxed, confirmation must be made that load is acceptable

PREPARED BY: [signature] FOR KEITH RENDELL DATE: 5/28/97 TIME: 5:08 am (pm)

Rev. 0

SCIENTIFIC ECOLOGY GROUP, INC.

ADVANCE NOTIFICATION FORM (Continued)

PROCESSING INSTRUCTIONS

CLIENT LOS ALAMOS NATIONAL LABORATORY

CLIENT MANIFEST # TA-50-1-97 SEG SHIPMENT #

SPECIAL/ ADDITIONAL INSTRUCTIONS:

MATERIALS ARE PART OF A RCRA CLOSURE. PLEASE RECORD AND REPORT DATE RECYCLED AND REUSE LOCATION.

Metal Shipment Container Information

Incoming Metal
Section I - Metal Types & Percents

Carbon	20 %
Stainless	80 %
Cast	%
Aluminum	%
Copper	%
Galvanized/Tin	%
Brass/Bronze	%
Other (specify)	%
100	%

Processed Recycled

Metal Mill	Cleaner
100	
100	

Incoming Lead
Section I - Metal Types & Percents

Sheet	%
Brick	%
Bleacers	%
Pigs	%
Shot	%
Other (specify) 100	%

Est. Avg. Contamination (Smear/dose)

Section II - Configuration & Size

Description	% of Load	Dimensions of large pieces: Length	Height	Width	Comments
Machinery or Assembled Parts		8'	2'	2'	
Tanks					
Structural Steel Thick welded pipe Minimum 0.25" thick		12'	2'	2'	
Misc. thin gauge scrap Est. heating, cabinets siding etc. <0.25" thick		6'	4'	4'	
Total	100%				

Section III - Non metal Miscellaneous

	Yes	No
1. Packaging Material: Are pieces individually wrapped. Estimated lbs. of sheeting	✓*	
2. Are nonmetallics blended to metals. If yes please give brief description		

* Contaminated Pieces ONLY

Section IV - Other Comments

* DRIVER CONTACT: TROY ESHLEMAN 505 470 4938

© Copyright 1990 & Published by: J. J. KELLER & ASSOCIATES, INC. • 145 West Wisconsin Ave. • P.O. Box 368 • Neenah, Wisconsin 54957-0368

CONTAINS HAZARDOUS MATERIALS

STRAIGHT BILL OF LADING
ORIGINAL - NOT NEGOTIABLE

HMTF 17545

Shipper's No. TA-50-1-97-2

CARRIER: Hittman Trans Ser Inc.

SCAC

Carrier's No.
Date

TO:
Consignee Scientific Ecology Group
Street 1560 Bear Creek Road
Destination Oakridge, TN Zip 37830

FROM:
Shipper Los Alamos National Laboratory
Street P.O. Box 1663
Origin Los Alamos NM Zip 87545

Route:

Vehicle Number

No. Shipping Units	HM	Kind of Packages, Description of Articles (IF HAZARDOUS MATERIALS - PROPER SHIPPING NAME)	HAZARD CLASS	I.D. Number	WEIGHT (subject to correction)	RATE	LABELS REQUIRED (or exemption)
1	x	Radioactive Material, Surface	7	UN2913	15 Tons		
		Contaminated Object					
		(1 - Sealand Container)					
		SCO-I					
		Total Radionuclides: Pu-241 - 2.25×10^{-7} g - 2.25×10^{-5} Ci - 8.33×10^{-7} TBq					
		Am-241 - 15.75×10^{-7} g - 3.21×10^{-6} Ci - 1.19×10^{-7} TBq					
		ERG # 162					
		This shipment is subject to the Exclusive use provision of 49CFR 173.427(6),					
		Exclusive use must be maintained throughout the course of this shipment.					

Remit C.O.D. to:
Address:
City: State: Zip:

COD Amt: $

C.O.D. FEE:
Prepaid ☐
Collect ☐ $

NOTE — Where the rate is dependent on value, shippers are required to state specifically in writing the agreed or declared value of the property. The agreed or declared value of the property is hereby specifically stated by the shipper to be not exceeding $ Per

Subject to Section 7 of the conditions, if this shipment is to be delivered to the consignee without recourse on the consignor, the consignor shall sign the following statement:
The carrier shall not make delivery of this shipment without payment of freight and all other lawful charges.
(Signature of Consignor)

FREIGHT CHARGES
☐ PREPAID ☐ COLLECT

RECEIVED, subject to the classifications and lawfully filed tariffs in effect on the date of issue of this Bill of Lading, the property described above in apparent good order, except as noted (contents and condition of contents of packages unknown), marked, consigned, and destined as indicated above which said carrier (the word carrier being understood throughout this contract as meaning any person or corporation in possession of the property under the contract) agrees to carry to its usual place of delivery at said destination, if on its route, otherwise to deliver to another carrier on the route to said destination. It is mutually agreed as to each carrier of all or any of, said property over all or any portion of said route to destination and as to each party at any time interested in all or any said property, that every service to be performed hereunder shall be subject to all the bill of lading terms and conditions in the governing classification on the date of shipment.
Shipper hereby certifies that he is familiar with all the bill of lading terms and conditions in the governing classification and the said terms and conditions are hereby agreed to by the shipper and accepted for himself and his assigns.

This is to certify that the above-named materials are properly classified, described, packaged, marked and labeled and are in proper condition for transportation according to the applicable regulations of the Department of Transportation.
Per

PLACARDS SUPPLIED Radioactive

PLACARDS REQUIRED ☒ YES ☐ NO — FURNISHED BY CARRIER

DRIVER SIGNATURE:

SHIPPER: Chemical Waste Management Inc
PER: Gary Sherman
DATE: 5-28-97

CARRIER: H. Hittman
PER:
DATE: 5-28-97

EMERGENCY RESPONSE TELEPHONE NUMBER: (505) 667-6211

Monitored at all times the Hazardous Material is in transportation including storage incidental to transportation (172.604).

CONTAINS HAZARDOUS MATERIALS

ESH-1 DIRECT SURVEY FORM

SAMPLE DESCRIPTION

Sample Date/Time: 8/6/96 1400 No. Of Samples: _____

TA 50 Bldg: 37

RCT: Dom Romero Z Number: Z 113633

Phone/Fax: 7-8686

SAMPLE TRACKING NUMBER

PURPOSE OF SURVEY

☐ ROUTINE ☐ PRE-JOB ☒ POST-JOB ☐ HOT-JOB

☐ ITEM RELEASE ☐ OFFSITE SHIPMENT ☐ ONSITE SHIPMENT

☐ NON-ROUTINE/OTHER: _____

LARGE CROSSOVER #2

INSTRUMENTATION

TYPE	HSE No.	CAL DUE	% EFF	BKG
HUD-139	7768	5/3/97	36	Ø

ADDITIONAL INFORMATION

☐ Occurrence No.: _____

☐ Incident No.: _____

☒ RWP No.: 50-37-D&D-96-04

Item/Area	Alpha		Beta/Gamma		Remarks
	cpm	dpm	cpm	dpm	
EXT. GLOVE BAG	NDA	Ø	5BKG	Ø	
INT. DUCT #2	50,000	138,888	3,000		→ SPILLOVER FROM +

ESH-1 DIRECT SURVEY FORM

SAMPLE DESCRIPTION

Sample Date/Time: 8/20/96 No. Of Samples: 7

TA: 50 Bldg: 37

RCT: Dominic Bonpo Z Number: 113633

Phone/Fax: 7-5686

SAMPLE TRACKING NUMBER

PURPOSE OF SURVEY

☐ ROUTINE ☐ PRE-JOB ☒ POST-JOB ☒ HOT-JOB

☐ ITEM RELEASE ☐ OFFSITE SHIPMENT ☐ ONSITE SHIPMENT

☐ NON-ROUTINE/OTHER:

REAR DOOR GLOVE BOX

INSTRUMENTATION

TYPE	HSE No.	CAL DUE	% EFF	BKG
ESP-1 AC3	8088	3/19/97	46	Ø
ESP-1 HP260	7482	5/13/97	30	150

ADDITIONAL INFORMATION

☐ Occurrence No.: N/A

☐ Incident No.:

☒ RWP No.: 50-37-D4D-96-05

Item/Area	Alpha cpm	Alpha dpm	Beta/Gamma cpm	Beta/Gamma dpm	Remarks
GLOVE BOX WINDOW INT.	NDA	Ø	≤ BKG	Ø	
DOOR RAIL	250	543	≤ BKG		
INT GLOVE BOX SIDE	50	108	≤ BKG		
EXT. GLOVE PORT	NDA	Ø	≤ BKG		
MAN LIFT	NDA	Ø	≤ BKG		
SAW 2 ACC	NDA	Ø	≤ BKG		
STEP OFF PAD	NDA	Ø	≤ BKG		
N/A					

LOS ALAMOS NATIONAL LABORATORY

HAZARDOUS & SOLID WASTE GROUP (ESH-19)

FAX TRANSMITTAL SHEET

FAX #: (505) 667-5224 **VERIFICATION #: (505) 665-9527**

DATE: 9/19/96 **ID #** ____ **LOG NO:** ESH-19:96-FAX-

FROM: Ron Conrad **PHONE #:** (___) 7-0950

TO: Mary Jane Winch **FAX #:** (___) 7-0735 **VERIFY PHONE #** (___) 7-5905

GRP/ORG: Waste

TO: ____ **FAX #:** (___) ____ **VERIFY PHONE #** (___) ____

GRP/ORG: ____

TO: ____ **FAX #:** (___) ____ **VERIFY PHONE #** (___) ____

GRP/ORG: ____

MESSAGE: TCLP results

NUMBER OF PAGES TO FOLLOW: ____

Cy: **CRM-4, MS A150**

SECTION LEADER

GROUP OR DEPUTY GROUP LEADER

April 22, 1996

KEY FACTORY -

****
***** I N T E R F E R E N C E C O R R E C T E D R E P O R T *****
****

Nuclide Name	Nuclide Id Confidence	Wt mean Activity (pCi/GRAM)	Wt mean Activity Uncertainty
CO-60	0.958	2.535698E+01	7.533600E-01
CS-137	0.990	3.476707E+01	1.341003E+00
AM-241	1.000	3.882608E+02	1.001217E+01
AM-243	0.985	9.375151E-01	1.424131E-01
Total Activity		4.4932E+02	

? = nuclide is part of an undetermined solution
X = nuclide rejected by the interference analysis
@ = nuclide contains energy lines not used in Weighted Mean Activity

Errors quoted at 2.000 sigma

********** U N I D E N T I F I E D P E A K S **********

Peak Locate Performed on: 9-16-96 9:51:46 AM
Peak Locate From Channel: 1
Peak Locate To Channel: 4096

	Peak No.	Energy (keV)	Peak Size in Counts per Second	Peak CPS % Uncertainty
F	1	5.35	2.3021E-01	17.80
F	2	32.06	1.2216E-01	32.03
m	5	77.03	3.0238E-01	16.35
F	6	94.72	5.3426E-02	69.27
F	7	98.53	1.0836E-01	37.60
F	8	129.17	1.0640E-01	32.60
F	9	238.46	3.3045E-01	15.91
F	10	295.08	1.4278E-01	23.32
F	11	351.77	1.8174E-01	20.16
F	12	583.06	9.5853E-02	28.05
F	13	609.18	1.5724E-01	19.61
F	15	910.60	6.7054E-02	38.31

M = First peak in a multiplet region
m = Other peak in a multiplet region
F = Fitted singlet

Errors quoted at 2.000 sigma

TCLP Volatile Organics
Method 8260

Sample ID
CAI-FR-1A

Lab Name: Paragon Analytics, Inc.
Client Name: ~~Allied Technology Group~~ ESA-IT LAW
Client ID: ~~Fitzsimons/UEA-96-045~~ RN 2616
Lab Sample ID: 96-09-051-01
Sample Matrix: TCLP Leachate
Sample Volume(ml): 0.50

Date Analyzed: 09/14/96
% Moisture: 0.00
Dilution Factor: 10

Analyte	Conc. (mg/L)	Reporting Limit (mg/L)
Vinyl chloride	U	0.1
1,1-Dichloroethane	U	0.1
Chloroform	U	0.1
1,2-Dichloroethane	U	0.1
Methyl ethyl ketone	U	0.1
Carbon Tetrachloride	U	0.1
Trichloroethylene	U	0.1
Benzene	U	0.1
Tetrachloroethylene	U	0.1
Chlorobenzene	U	0.1

U = undetected

Surrogate Recoveries

Analyte	% Recovery	% Rec. Limits
Dibromofluoromethane	99%	86-118
Toluene-d8	98%	88-110
4-Bromofluorobenzene	99%	86-115

REGULATED TCLP METALS

SAMPLE RESULTS

SAMPLE NO.

CAI-FR-1

Lab Name: ANALYTICAL_TECHNOLOGIES__ Contract: _____

Lab Code: NA____ Case No.: _____ SAS No.: _____ SDG No.: 2554__

Matrix (soil/water): WATER Lab Sample ID: T185-01

Level (low/med): LOW__ Date Received: 08/28/96

% Solids: __0.0

Concentration Units (mg/L): UG/L_

CAS No.	Analyte	Concentration	C	Q	M	mg/L	TCLP
7440-38-2	Arsenic__	39.6	B		P_	.040	5.0
7440-39-3	Barium__	2200			P_	2.2	100.
7440-43-9	Cadmium__	6.1	B		P_	.006	~~5.0~~ 1.
7440-47-3	Chromium_	5.5	B		P_	.005	5.0
7439-92-1	Lead____	12.0	U		P_	.012	5.0
7439-97-6	Mercury__	0.20	U		AV	.0002	~~0.2~~
7782-49-2	Selenium_	25.3	B		P_	.025	1.0
7440-22-4	Silver___	10.0	U		P_	.010	5.0

Sample of crushed refractory, CAI-FR-1 refrac furnace

Color Before: COLORLESS Clarity Before: CLEAR_ Texture: N/A___

Color After: COLORLESS Clarity After: CLEAR_ Artifacts: _____

Comments:

RECEIVED SEP 2 0 1996 ORIGINAL

Los Alamos National Laboratory

WASTE PROFILE FORM

Account Information

For rapid processing, complete **all sections** in black or blue ink and mail this form to Waste Services Group at MS J579

Reference Number: 24934

Waste Generator's Name (Print)	Znumber	Waste Management Coordinator's Name (Print)	Znumber
Tommy Hernandez	082298	Dan Stu +	112427

Generator's Group	Generator's Telephone	Generator's Mail Stop	Waste Stream Technical Area	Building	Room
EM/CC	7-3459		50	37	NA

Waste Accumulation
Check as many as apply.

- ☐ Satellite accumulation area --> site no.: _____
- ☐ Less than 90 day accumulation area --> site no.: _____
- ☐ ~~Radioactive Materials Management Area~~ (RMMA) site no.: _____
- ☐ None of the above

Method of Characterization
Check as many as apply.

- ☐ Acceptable Knowledge (AK)
- ☒ Analysis attached --> sample/request no. _____
- ☐ MSDS attached
- ☐ Request for analysis

Section 1- Chemical and Physical Characteristics

For help in completing this section of the form, call 5-WAST or 5-4000.

Waste Type
Check only one.

- ☐ Unused/unspent chemical
  Check *Waste Classes* and *Associated Documentation* Only
- ☒ Process waste/spent chemical
  Complete all of Section 1.

Waste Classes
Check as many as apply.

- ☐ On-going generation
- ☒ One-time generation
- ☒ Radioactive (complete Sec. 2)
- ☐ Non-radioactive
- ☐ Wastewater (complete Sec. 3)
- ☐ Classified/Sensitive

Associated Documentation
Check as many as apply.

- ☐ Process SOP --> no.: _____
- ☐ RMMA OP --> no.: _____
- ☐ WM SOP --> no.: _____
- ☐ Other --> _____
- ☒ None --> describe below

Waste Category
Check as many as apply.

- ☐ Solvent
- ☐ Degreaser
- ☐ Dioxin
- ☐ Electroplating
- ☐ Treated hazardous waste residue
- ☐ Explosive process waste
- ☐ Infectious/biological waste
- ☐ Beryllium
- ☐ Asbestos-friable
- ☒ Asbestos-nonfriable
- ☐ Empty containers
- ☐ PCB (<50 ppm)
  - ☐ PCB (50 - 500 ppm)
  - ☐ PCB (> 500 ppm)
  - → id. no. : _____
- ☐ Not applicable --> describe below

Waste Sources
Check as many as apply.

- ☐ Research and development
- ☐ Maintenance
- ☐ Construction
- ☐ Material processing
- ☒ Decon/decom
- ☐ Investigation derived
- ☐ Remediation
- ☐ UST - petroleum
- ☐ UST - non-petroleum
- ☐ Generator treatment
- ☐ Interim/permitted treatment
- ☐ Industrial sludge
- ☐ Sanitary sludge
- ☐ Abatement

Waste Matrix
Check only one.

Gas

- ☐ ≤ 1.5 Atmospheres
- ☐ > 1.5 Atmospheres

Liquid

- ☐ Aqueous
- ☐ Organic
- ☐ Inorganic

Solid

- ☐ Powder/ash
- ☒ Solid
- ☐ Absorbed liquid

Matrix Type
Check only one.

- ☐ Homogeneous
- ☒ Heterogeneous --> describe below

Waste/Process Description

Glove boxes (upper + lower), cross over ducts and incinerator chambers (upper + lower) from decommissioning of controlled air incinerator. Void spaces filled with PPE + plastic.

ORIGINAL

Section 1- Chemical and Physical Characteristics (continued)

Ignitability (degrees F.)
Check only one.

- ☐ < 73
- ☐ 73-99
- ☐ 100-139
- ☐ 140-200
- ☐ > 200
- ☐ Ignitable solid
- ☐ DOT oxidizer
- ☒ Not ignitable

Corrosivity (pH)
Check only one.

- ☐ ≤ 2.0
- ☐ 2.1-4.0
- ☐ 4.1-6.0
- ☐ 6.1-9.0
- ☐ 9.1-12.4
- ☐ ≥ 12.5
- ☐ Liquid corrosive to steel
- ☒ Not aqueous

Reactivity
Check as many as apply.

- ☐ Unstable
- ☐ Water reactive
- ☐ Pyrophoric
- ☐ Cyanide bearing
- ☐ Sulfide bearing
- ☐ Shock sensitive
- ☐ Explosive - class _____
- ☒ Non-reactive

Boiling Point (degrees F.)
Check only one.

- ☐ ≤ 95
- ☐ > 95
- ☒ Not applicable

Identify presence of contaminants.			Minimum	Maximum	Unit (ppm or % only)	Analytical meth
Toxicity Characteristic Metals						
Arsenic	☒ None	☐ < 5.0 ppm				☐ TCLP ☐ Tot
Barium	☐ None	☒ < 100.0 ppm				☒ TCLP ☐ Tot
Cadmium	☒ None	☐ < 1.0 ppm				☐ TCLP ☐ Total
Chromium	☐ None	☐ < 5.0 ppm				☐ TCLP ☐ Total
Lead	☐ None	☐ < 5.0 ppm				☐ TCLP ☐ Total
Mercury	☐ None	☐ < 0.2 ppm				☐ TCLP ☐ Tot
Selenium	☐ None	☐ < 1.0 ppm				☐ TCLP ☐ Total
Silver	☒ None	☐ < 5.0 ppm				☐ TCLP ☐ Total
Toxicity Characteristic Organic Compounds						
Benzene	☒ None	☐ < 0.5 ppm				☐ TCLP ☐ Tot
Carbon tetrachloride	☐ None	☐ < 0.5 ppm				☐ TCLP ☐ Total
Chlorobenzene	☐ None	☐ < 100.0 ppm				☐ TCLP ☐ Total
Chloroform	☐ None	☐ < 6.0 ppm				☐ TCLP ☐ Total
Cresol	☐ None	☐ < 200.0 ppm				☐ TCLP ☐ Tot
1,4-dichlorobenzene	☐ None	☐ < 7.5 ppm				☐ TCLP ☐ Tot
1,2-Dichloroethane	☐ None	☐ < 0.5 ppm				☐ TCLP ☐ Total
1,1-Dichloroethylene	☐ None	☐ < 0.7 ppm				☐ TCLP ☐ Total
2,4-Dinitrotoluene	☐ None	☐ < 0.13 ppm				☐ TCLP ☐ Tot
Hexachlorobenzene	☐ None	☐ < 0.13 ppm				☐ TCLP ☐ Tot
Hexachlorobutadiene	☐ None	☐ < 0.5 ppm				☐ TCLP ☐ Total
Hexachloroethane	☐ None	☐ < 3.0 ppm				☐ TCLP ☐ Total
Methyl ethyl ketone	☐ None	☐ < 200.0 ppm				☐ TCLP ☐ Total
Nitrobenzene	☐ None	☐ < 2.0 ppm				☐ TCLP ☐ Tot
Pentachlorophenol	☐ None	☐ < 100.0 ppm				☐ TCLP ☐ Tot
Pyridine	☐ None	☐ < 5.0 ppm				☐ TCLP ☐ Total
Perchloroethylene or tetrachloroethylene	☐ None	☐ < 0.7 ppm				☐ TCLP ☐ Total
Trichloroethylene	☐ None	☐ < 0.5 ppm				☐ TCLP ☐ Tot
2,4,5-Trichlorophenol	☐ None	☐ < 400.0 ppm				☐ TCLP ☐ Tot
2,4,6-Trichlorophenol	☐ None	☐ < 2.0 ppm				☐ TCLP ☐ Total
Vinyl chloride	☒ None	☐ < 0.2 ppm				☐ TCLP ☐ Total

Additional Chemical Constituents and Contaminants (for hazardous constituents, see AR 10-3, Appendix A)
List all other constituents (including inerts) not identified above and attach any applicable analyses.

Name of constituent	Cas no.(optional)	Minimum	Maximum	Unit (ppm or % onl
~~Glove box/chamber (steel, refractory,~~				
~~glass~~				
Steel		35	55	%
Refractory		35	55	
Glass		2	5	
Hepa filters		2	5	
Rubber		0	1	
Asbestos		0	1/2	
PPE / Plastic		10	30	

Section 2- Radiological Characteristics

For help in completing this section of the form, call 5-WAST or 5-4000.

	Range minimum		Range maximum	Unit (Cv/g or Ci/l)
General				
☐ Alpha		to		
☐ Beta		to		
☐ Gamma		to		
TRU radionuclides				
☐ None present				
☒ Am-241	0	to	3.8e-10	Ci/g
☒ Am-243	0	to	9.37e-13	Ci/g
☐ Cf-249		to		
☐ Cf-251		to		
☐ Cm-243		to		
☐ Cm-245		to		
☐ Cm-247		to		
☐ Pu-238		to		
☒ Pu-239	0	to	3.7e-9	Ci/g
☐ Pu-240		to		
☐ Pu-242		to		
Fission products				
☐ None present				
☐ Ba-140		to		
☐ Ce-144		to		
☐ Cs-134		to		
☒ Cs-137	0	to	3.48e-11	Ci/g
☐ I-129		to		
☐ I-133		to		
☐ Kr-85		to		
☐ Nb-95		to		
☐ Ru-106		to		
☐ Sb-125		to		
☐ Sr-90		to		
☐ Tc-99		to		
☐ Zr-93		to		
☐ Zr-95		to		
Activation products				
☐ None present				
☐ As -74		to		
☐ Be-7		to		
☐ C-14		to		
☐ Co-56		to		
☐ Co-57		to		
☐ Co-58		to		
☒ Co-60	0	to	2.53e-11	Ci/g
☐ Cr-51		to		
☐ Eu-152		to		
☐ Mn-52		to		
☐ Mn-54		to		
☐ Nb-94		to		
☐ Ni-59		to		
☐ Ni-63		to		
☐ Rb-83		to		
☐ Rb-84		to		
☐ Se-75		to		
☐ Sr-82		to		
☐ Sr-85		to		
☐ V-48		to		
☐ Y-88		to		
☐ Zn-65		to		
☐ Zr-88		to		

	Range minimum		Range maximum	Unit (Cv/g or Ci/l)
Other				
☐ None present				
☐ Am-242		to		
☐ Bi-207		to		
☐ Bi-210		to		
☐ Cf-250		to		
☐ Cf-252		to		
☐ Cm-244		to		
☐ H-3		to		
☐ Pa-231		to		
☐ Pb-210		to		
☐ Po-210		to		
☐ Pu-236		to		
☐ Pu-241		to		
☐ Ra-226		to		
☐ Ra-228		to		
☐ Th-230		to		
☐ Th-232		to		
☐ U-232		to		
☐ U-233		to		
☐ U-234		to		
☐ U-235		to		
☐ U-236		to		
☐ U-238		to		
Add'l radionuclides				
☐ No additional radionuclides present				
		to		
		to		
		to		
		to		
		to		
		to		
		to		
		to		
		to		
		to		
		to		
		to		
		to		
		to		

Contamination Type: *Check as many as apply.*

☐ Volume Contamination

☐ Surface Contamination

Section 3 - Wastewater Characteristics

For help in completing this section of the form, call 7-4301.

Identify presence of contaminants			Minimum	Maximum	Unit (ppm or % only)	Analytical method
Aluminum	☐ None	☐ < 5.0 ppm	_____	to _____	_____	☐ TCLP ☐ Total
Boron	☐ None	☐ < 5.0 ppm	_____	to _____	_____	☐ TCLP ☐ Total
Cobalt	☐ None	☐ < 1.0 ppm	_____	to _____	_____	☐ TCLP ☐ Total
Copper	☐ None	☐ < 1.0 ppm	_____	to _____	_____	☐ TCLP ☐ Total
Vanadium	☐ None	☐ < 0.10 ppm	_____	to _____	_____	☐ TCLP ☐ Total
Zinc	☐ None	☐ < 95.4 ppm	_____	to _____	_____	☐ TCLP ☐ Total

Maximum daily flow when discharge occurs: _____ ☐ Gallons ☐ Liters

Average daily flow when discharge occurs: _____ ☐ Gallons ☐ Liters

Estimated number of days per year that discharge will occur: _____

Estimated total volume per year discharged to the Radioactive Liquid Waste Collection System at TA-50-1: _____ ☐ Gallons ☐ Liters

For TA-55 use only. Wastewater will be discharged through one of the following:

☐ Acid line ☐ Caustic line ☐ Industrial waste line

Section 4 - Additional Information

If additional information is available on the chemical, physical, or radiological character of the waste not covered on this form, provide it below:

Pu concentration based on conservative assumption that all Am-241 is daughter of Pu and there is a 8:1 Pu:Am ratio

WASTE GENERATOR CERTIFICATION: *Based on my knowledge of the waste and/or chemical/physical analysis, I certify that the information on this form is correct. I understand that this information will be made available to regulatory agencies and that there are significant penalties for submitting false information, including the possibility of fines and imprisonment for knowing violations.*

Signature	Date
Tommy R. Lemons	9-19-96

ESH-1 DIRECT SURVEY FORM

SAMPLE DESCRIPTION

Sample Date/Time: 8/23/96 No. Of Samples:

50 Bldg: 37 RM 112

RCT: Damian Pompez Z Number: 113637

Phone/Fax: 7-8686

SAMPLE TRACKING NUMBER

PURPOSE OF SURVEY

☐ ROUTINE ☒ PRE-JOB ☐ POST-JOB ☐ HOT-JOB

☐ ITEM RELEASE ☐ OFFSITE SHIPMENT ☐ ONSITE SHIPMENT

☐ NON-ROUTINE/OTHER:

INSTRUMENTATION

TYPE	HSE No.	CAL DUE	% EFF	BKG
ESP-1 EBERLINE	AC-3 8088	3/19/97	46	¢

ADDITIONAL INFORMATION

Occurrence No.:

Incident No.:

RWP No.: 50-37-D&D-96-05

Item/Area	Alpha		Beta/Gamma		Remarks
	cpm	dpm	cpm	dpm	
REFRACTORY SAMPLE	80K	173913	N/A		
BOTTOM G.B. INCINERATOR	50K	108695			
GLOVE FROM GLOVE BOX	35K	76,086			

Bulk metal

RECEIVED SEP 2 0 1996

ORIGINAL

Los Alamos
National Laboratory

WASTE PROFILE FORM

Account Information	Reference Number
-	24933

For rapid processing, complete **all sections** in black or blue ink and mail this form to Waste Services Group at MS J579

Waste Generator's Name (Print)	Znumber	Waste Management Coordinator's Name (Print)	Znumber
Tommy Hernandez	082298	Dan Stout	112427

Generator's Group	Generator's Telephone	Generator's Mail Stop	Waste Stream Technical Area	Building	Room
EM/ER	7-3459	M 769	50	37	NA

Waste Accumulation
Check as many as apply.

- ☐ Satellite accumulation area --> site no.: _____
- ☐ Less than 90 day accumulation area --> site no.: _____
- ~~☐ Radioactive Materials Management Area (RMMA) --> site no.: _____~~ RCA
- ☒ None of the above

Method of Characterization
Check as many as apply.

- ☐ Acceptable Knowledge (AK)
- ☒ Analysis attached --> sample/request no. Survey Data
- ☐ MSDS attached
- ☐ Request for analysis

Section 1- Chemical and Physical Characteristics

For help in completing this section of the form, call 5-WAST or 5-4000.

Waste Type
Check only one.

- ☐ Unused/unspent chemical
  Check *Waste Classes* and *Associated Documentation* Only
- ☒ Process waste/spent chemical
  Complete all of Section 1.

Waste Classes
Check as many as apply.

- ☒ On-going generation
- ☐ One-time generation
- ☒ Radioactive (complete Sec. 2)
- ☐ Non-radioactive
- ☐ Wastewater (complete Sec. 3)
- ☐ Classified/Sensitive

Associated Documentation
Check as many as apply.

- ☐ Process SOP --> no.: _____
- ☐ RMMA OP --> no.: _____
- ☐ WM SOP --> no.: _____
- ☐ Other --> _____
- ☒ None --> describe below

Waste Category
Check as many as apply.

- ☐ Solvent
- ☐ Degreaser
- ☐ Dioxin
- ☐ Electroplating
- ☐ Treated hazardous waste residue
- ☐ Explosive process waste
- ☐ Infectious/biological waste
- ☐ Beryllium
- ☐ Asbestos-friable
- ☐ Asbestos-nonfriable
- ☐ Empty containers
- ☐ PCB (<50 ppm)
  - ☐ PCB (50 - 500 ppm)
  - ☐ PCB (> 500 ppm)
  - → id. no. : _____
- ☒ Not applicable --> describe below

Waste Sources
Check as many as apply.

- ☐ Research and development
- ☐ Maintenance
- ☐ Construction
- ☐ Material processing
- ☒ Decon/decom
- ☐ Investigation derived
- ☐ Remediation
- ☐ UST - petroleum
- ☐ UST - non-petroleum
- ☐ Generator treatment
- ☐ Interim/permitted treatment
- ☐ Industrial sludge
- ☐ Sanitary sludge
- ☐ Abatement

Waste Matrix
Check only one.

Gas

- ☐ ≤ 1.5 Atmospheres
- ☐ > 1.5 Atmospheres

Liquid

- ☐ Aqueous
- ☐ Organic
- ☐ Inorganic

Solid

- ☐ Powder/ash
- ☒ Solid
- ☐ Absorbed liquid

Matrix Type
Check only one.

- ☐ Homogeneous
- ☒ Heterogeneous --> describe below

Waste/Process Description

Surface contaminated metal components from O+D of Controlled Air Incinerator

Section 1- Chemical and Physical Characteristics (continued)

Ignitability (degrees F.)
Check only one.

- ☐ < 73
- ☐ 73-99
- ☐ 100-139
- ☐ 140-200
- ☐ > 200
- ☐ Ignitable solid
- ☐ DOT oxidizer
- ☒ Not ignitable

Corrosivity (pH)
Check only one.

- ☐ ≤ 2.0
- ☐ 2.1-4.0
- ☐ 4.1-6.0
- ☐ 6.1-9.0
- ☐ 9.1-12.4
- ☐ ≥ 12.5
- ☐ Liquid corrosive to steel
- ☒ Not aqueous

Reactivity
Check as many as apply.

- ☐ Unstable
- ☐ Water reactive
- ☐ Pyrophoric
- ☐ Cyanide bearing
- ☐ Sulfide bearing
- ☐ Shock sensitive
- ☐ Explosive - class _____
- ☒ Non-reactive

Boiling Point (degrees F.)
Check only one.

- ☐ ≤ 95
- ☐ > 95
- ☒ Not applicable

Identify presence of contaminants.			Minimum		Maximum	Unit (ppm or % only)	Analytical method
Toxicity Characteristic Metals							
Arsenic	☒ None	☐ < 5.0 ppm		to			☐ TCLP ☐ Total
Barium	☐ None	☐ < 100.0 ppm		to			☐ TCLP ☐ Total
Cadmium	☐ None	☐ < 1.0 ppm		to			☐ TCLP ☐ Total
Chromium	☐ None	☐ < 5.0 ppm		to			☐ TCLP ☐ Total
Lead	☐ None	☐ < 5.0 ppm		to			☐ TCLP ☐ Total
Mercury	☐ None	☐ < 0.2 ppm		to			☐ TCLP ☐ Total
Selenium	☐ None	☐ < 1.0 ppm		to			☐ TCLP ☐ Total
Silver	☒ None	☐ < 5.0 ppm		to			☐ TCLP ☐ Total
Toxicity Characteristic Organic Compounds							
Benzene	☒ None	☐ < 0.5 ppm		to			☐ TCLP ☐ Total
Carbon tetrachloride	☐ None	☐ < 0.5 ppm		to			☐ TCLP ☐ Total
Chlorobenzene	☐ None	☐ < 100.0 ppm		to			☐ TCLP ☐ Total
Chloroform	☐ None	☐ < 6.0 ppm		to			☐ TCLP ☐ Total
Cresol	☐ None	☐ < 200.0 ppm		to			☐ TCLP ☐ Total
1,4-dichlorobenzene	☐ None	☐ < 7.5 ppm		to			☐ TCLP ☐ Total
1,2-Dichloroethane	☐ None	☐ < 0.5 ppm		to			☐ TCLP ☐ Total
1,1-Dichloroethylene	☐ None	☐ < 0.7 ppm		to			☐ TCLP ☐ Total
2,4-Dinitrotoluene	☐ None	☐ < 0.13 ppm		to			☐ TCLP ☐ Total
Hexachlorobenzene	☐ None	☐ < 0.13 ppm		to			☐ TCLP ☐ Total
Hexachlorobutadiene	☐ None	☐ < 0.5 ppm		to			☐ TCLP ☐ Total
Hexachloroethane	☐ None	☐ < 3.0 ppm		to			☐ TCLP ☐ Total
Methyl ethyl ketone	☐ None	☐ < 200.0 ppm		to			☐ TCLP ☐ Total
Nitrobenzene	☐ None	☐ < 2.0 ppm		to			☐ TCLP ☐ Total
Pentachlorophenol	☐ None	☐ < 100.0 ppm		to			☐ TCLP ☐ Total
Pyridine	☐ None	☐ < 5.0 ppm		to			☐ TCLP ☐ Total
Perchloroethylene or tetrachloroethylene	☐ None	☐ < 0.7 ppm		to			☐ TCLP ☐ Total
Trichloroethylene	☐ None	☐ < 0.5 ppm		to			☐ TCLP ☐ Total
2,4,5-Trichlorophenol	☐ None	☐ < 400.0 ppm		to			☐ TCLP ☐ Total
2,4,6-Trichlorophenol	☐ None	☐ < 2.0 ppm		to			☐ TCLP ☐ Total
Vinyl chloride	☒ None	☐ < 0.2 ppm		to			☐ TCLP ☐ Total

Additional Chemical Constituents and Contaminants (for hazardous constituents, see AR 10-3, Appendix A)
List all other constituents (including inerts) not identified above and attach any applicable analyses.

Name of constituent	Cas no.(optional)	Minimum		Maximum	Unit (ppm or % only)
Stainless steel		70	to	95	%
Glass		0	to	1	%
Hastelloy metal		5	to	20	%
Insulation (non-asbestos)		0	to	10	%
			to		
			to		
			to		
			to		
			to		

Section 2- Radiological Characteristics

For help in completing this section of the form, call 5-WAST or 5-4000.

	Range minimum		Range maximum	Unit (Ci/g or Ci/l)
General				
☒ Alpha	0	to	95×10^{-12}	Ci/g
☒ Beta	0	to	95×10^{-12}	↓
☒ Gamma	0	to	95×10^{-12}	
TRU radionuclides				
☐ None present				
☐ Am-241		to		
☐ Am-243		to		
☐ Cf-249		to		
☐ Cf-251		to		
☐ Cm-243		to		
☐ Cm-245		to		
☐ Cm-247		to		
☐ Pu-238		to		
☐ Pu-239		to		
☐ Pu-240		to		
☐ Pu-242		to		
Fission products				
☐ None present				
☐ Ba-140		to		
☐ Ce-144		to		
☐ Cs-134		to		
☐ Cs-137		to		
☐ I-129		to		
☐ I-133		to		
☐ Kr-85		to		
☐ Nb-95		to		
☐ Ru-106		to		
☐ Sb-125		to		
☐ Sr-90		to		
☐ Tc-99		to		
☐ Zr-93		to		
☐ Zr-95		to		
Activation products				
☐ None present				
☐ As -74		to		
☐ Be-7		to		
☐ C-14		to		
☐ Co-56		to		
☐ Co-57		to		
☐ Co-58		to		
☐ Co-60		to		
☐ Cr-51		to		
☐ Eu-152		to		
☐ Mn-52		to		
☐ Mn-54		to		
☐ Nb-94		to		
☐ Ni-59		to		
☐ Ni-63		to		
☐ Rb-83		to		
☐ Rb-84		to		
☐ Se-75		to		
☐ Sr-82		to		
☐ Sr-85		to		
☐ V-48		to		
☐ Y-88		to		
☐ Zn-65		to		
☐ Zr-88		to		

	Range minimum		Range maximum	Unit (Ci/g or Ci/l)
Other				
☐ None present				
☐ Am-242		to		
☐ Bi-207		to		
☐ Bi-210		to		
☐ Cf-250		to		
☐ Cf-252		to		
☐ Cm-244		to		
☐ H-3		to		
☐ Pa-231		to		
☐ Pb-210		to		
☐ Po-210		to		
☐ Pu-236		to		
☐ Pu-241		to		
☐ Ra-226		to		
☐ Ra-228		to		
☐ Th-230		to		
☐ Th-232		to		
☐ U-232		to		
☐ U-233		to		
☐ U-234		to		
☐ U-235		to		
☐ U-236		to		
☐ U-238		to		
Add'l radionuclides				
☐ No additional radionuclides present				
		to		
		to		
		to		
		to		
		to		
		to		
		to		
		to		
		to		
		to		
		to		
		to		
		to		
		to		

Contamination Type: *Check as many as apply.*

☐ Volume Contamination

☐ Surface Contamination

Section 3 - Wastewater Characteristics

For help in completing this section of the form, call 7-4301.

Identify presence of contaminants			Minimum	Maximum	Unit (ppm or % only)	Analytical method
Aluminum	☐ None	☐ < 5.0 ppm	_____	to _____	_____	☐ TCLP ☐ Total
Boron	☐ None	☐ < 5.0 ppm	_____	to _____	_____	☐ TCLP ☐ Total
Cobalt	☐ None	☐ < 1.0 ppm	_____	to _____	_____	☐ TCLP ☐ Total
Copper	☐ None	☐ < 1.0 ppm	_____	to _____	_____	☐ TCLP ☐ Total
Vanadium	☐ None	☐ < 0.10 ppm	_____	to _____	_____	☐ TCLP ☐ Total
Zinc	☐ None	☐ < 95.4 ppm	_____	to _____	_____	☐ TCLP ☐ Total

Maximum daily flow when discharge occurs: _____ ☐ Gallons ☐ Liters

Average daily flow when discharge occurs: _____ ☐ Gallons ☐ Liters

Estimated number of days per year that discharge will occur: _____

Estimated total volume per year discharged to the Radioactive Liquid Waste Collection System at TA-50-1: _____ ☐ Gallons ☐ Liters

For TA-55 use only. Wastewater will be discharged through one of the following:

☐ Acid line ☐ Caustic line ☐ Industrial waste line

Section 4 - Additional Information

If additional information is available on the chemical, physical, or radiological character of the waste not covered on this form, provide it below:

WASTE GENERATOR CERTIFICATION: *Based on my knowledge of the waste and/or chemical/physical analysis, I certify that the information on this form is correct. I understand that this information will be made available to regulatory agencies and that there are significant penalties for submitting false information, including the possibility of fines and imprisonment for knowing violations.*

Signature	Date
Tommy R. Hurand	9-19-96

ORIGINAL

Los Alamos
National Laboratory

RECEIVED SEP 1 3 1996

WASTE PROFILE FORM

RECEIVED SEP 1 3 1996

For rapid processing, complete **all sections** in black or blue ink and mail this form to Waste Services Group at MS J579

Account Information	Reference Number
-	24894

Waste Generator's Name (Print)	Znumber	Waste Management Coordinator's Name (Print)	Znumber
Tommy Hernandez	082298	Don Stout	112427

Generator's Group	Generator's Telephone	Generator's Mail Stop	Waste Stream Technical Area	Building	Room
EM/ER	7-3459	M769	50	37	NA

Waste Accumulation
Check as many as apply.

- ☐ Satellite accumulation area --> site no.: _____
- ☐ Less than 90 day accumulation area --> site no.: _____
- ☐ Radioactive Materials Management Area (RMMA) --> site no.: _____
- ☒ None of the above

Method of Characterization
Check as many as apply.

- ☐ Acceptable Knowledge (AK)
- ☒ Analysis attached --> sample/request no. CAI - LE 1 ~~through 5~~
- ☐ MSDS attached
- ☐ Request for analysis

Section 1- Chemical and Physical Characteristics

For help in completing this section of the form, call 5-WAST or 5-4000.

Waste Type
Check only one.

- ☐ Unused/unspent chemical
  Check *Waste Classes* and *Associated Documentation* Only
- ☒ Process waste/spent chemical
  Complete all of Section 1.

Waste Classes
Check as many as apply.

- ☐ On-going generation
- ☒ One-time generation
- ☐ Radioactive (complete Sec. 2)
- ☒ Non-radioactive
- ☐ Wastewater (complete Sec. 3)
- ☐ Classified/Sensitive

Associated Documentation
Check as many as apply.

- ☐ Process SOP --> no.: _____
- ☐ RMMA OP --> no.: _____
- ☐ WM SOP --> no.: _____
- ☐ Other --> _____
- ☒ None --> describe below

Waste Category
Check as many as apply.

- ☐ Solvent
- ☐ Degreaser
- ☐ Dioxin
- ☐ Electroplating
- ☐ Treated hazardous waste residue
- ☐ Explosive process waste
- ☐ Infectious/biological waste
- ☐ Beryllium
- ☐ Asbestos-friable
- ☐ Asbestos-nonfriable
- ☐ Empty containers
- ☐ PCB (<50 ppm)
  - ☐ PCB (50 - 500 ppm)
  - ☒ PCB (> 500 ppm)
  - → id. no.: 4934
- ☐ Not applicable --> describe below

Waste Sources
Check as many as apply.

- ☐ Research and development
- ☐ Maintenance
- ☐ Construction
- ☐ Material processing
- ☒ Decon/decom
- ☐ Investigation derived
- ☐ Remediation
- ☐ UST - petroleum
- ☐ UST - non-petroleum
- ☐ Generator treatment
- ☐ Interim/permitted treatment
- ☐ Industrial sludge
- ☐ Sanitary sludge
- ☐ Abatement

Waste Matrix
Check only one.

Gas
- ☐ ≤ 1.5 Atmospheres
- ☐ > 1.5 Atmospheres

Liquid
- ☐ Aqueous
- ☐ Organic
- ☐ Inorganic

Solid
- ☐ Powder/ash
- ☒ Solid
- ☐ Absorbed liquid

Matrix Type
Check only one.

- ☒ Homogeneous
- ☐ Heterogeneous --> describe below

Waste/Process Description

RED IRON DIESEL FEED TANK FOR CONTROLLED AIR INCINERATOR. NO LISTED WASTES WERE BURNED AT THE INCINERATOR. REPORTED CONCENTRATIONS BASED ON SWIPE DATA, AND THE FOLLOWING ASSUMPTIONS: SWIPES REMOVED 50% OF ANALYTE CONCENTRATION (CONSERVATIVE ESTIMAT THE SURFACE AREA OF THE INSIDE OF THE TANK = 33 FT^2 AND THE TANK WEIGHED 500 POUNDS

Section 1- Chemical and Physical Characteristics (continued)

Ignitability (degrees F.)
Check only one.

- ☐ < 73
- ☐ 73-99
- ☐ 100-139
- ☐ 140-200
- ☐ > 200
- ☐ Ignitable solid
- ☐ DOT oxidizer
- ☒ Not ignitable

Corrosivity (pH)
Check only one.

- ☐ ≤ 2.0
- ☐ 2.1-4.0
- ☐ 4.1-6.0
- ☐ 6.1-9.0
- ☐ 9.1-12.4
- ☐ ≥ 12.5
- ☐ Liquid corrosive to steel
- ☒ Not aqueous

Reactivity
Check as many as apply.

- ☐ Unstable
- ☐ Water reactive
- ☐ Pyrophoric
- ☐ Cyanide bearing
- ☐ Sulfide bearing
- ☐ Shock sensitive
- ☐ Explosive - class _____
- ☒ Non-reactive

Boiling Point (degrees F.)
Check only one.

- ☐ ≤ 95
- ☐ > 95
- ☒ Not applicable

Identify presence of contaminants.			Minimum	Maximum	Unit (ppm or % only)	Analytical method
Toxicity Characteristic Metals						
Arsenic	☒ None	☐ < 5.0 ppm				☐ TCLP ☐ Total
Barium	☒ None	☐ < 100.0 ppm				☐ TCLP ☐ Total
Cadmium	☐ None	☒ < 1.0 ppm				☐ TCLP ☒ Total
Chromium	☐ None	☒ < 5.0 ppm				☐ TCLP ☒ Total
Lead	☒ None	☐ < 5.0 ppm				☐ TCLP ☐ Total
Mercury	☒ None	☐ < 0.2 ppm				☐ TCLP ☐ Total
Selenium	☒ None	☐ < 1.0 ppm				☐ TCLP ☐ Total
Silver	☒ None	☐ < 5.0 ppm				☐ TCLP ☐ Total
Toxicity Characteristic Organic Compounds						
Benzene	☒ None	☐ < 0.5 ppm				☐ TCLP ☐ Total
Carbon tetrachloride	☐ None	☐ < 0.5 ppm				☐ TCLP ☐ Total
Chlorobenzene	☐ None	☐ < 100.0 ppm				☐ TCLP ☐ Total
Chloroform	☐ None	☐ < 6.0 ppm				☐ TCLP ☐ Total
Cresol	☐ None	☐ < 200.0 ppm				☐ TCLP ☐ Total
1,4-dichlorobenzene	☐ None	☐ < 7.5 ppm				☐ TCLP ☐ Total
1,2-Dichloroethane	☐ None	☐ < 0.5 ppm				☐ TCLP ☐ Total
1,1-Dichloroethylene	☐ None	☐ < 0.7 ppm				☐ TCLP ☐ Total
2,4-Dinitrotoluene	☐ None	☐ < 0.13 ppm				☐ TCLP ☐ Total
Hexachlorobenzene	☐ None	☐ < 0.13 ppm				☐ TCLP ☐ Total
Hexachlorobutadiene	☐ None	☐ < 0.5 ppm				☐ TCLP ☐ Total
Hexachloroethane	☐ None	☐ < 3.0 ppm				☐ TCLP ☐ Total
Methyl ethyl ketone	☐ None	☐ < 200.0 ppm				☐ TCLP ☐ Total
Nitrobenzene	☐ None	☐ < 2.0 ppm				☐ TCLP ☐ Total
Pentachlorophenol	☐ None	☐ < 100.0 ppm				☐ TCLP ☐ Total
Pyridine	☐ None	☐ < 5.0 ppm				☐ TCLP ☐ Total
Perchloroethylene or tetrachloroethylene	☐ None	☐ < 0.7 ppm				☐ TCLP ☐ Total
Trichloroethylene	☐ None	☐ < 0.5 ppm				☐ TCLP ☐ Total
2,4,5-Trichlorophenol	☐ None	☐ < 400.0 ppm				☐ TCLP ☐ Total
2,4,6-Trichlorophenol	☐ None	☐ < 2.0 ppm				☐ TCLP ☐ Total
Vinyl chloride	☒ None	☐ < 0.2 ppm				☐ TCLP ☐ Total

Additional Chemical Constituents and Contaminants (for hazardous constituents, see AR 10-3, Appendix A)
List all other constituents (including inerts) not identified above and attach any applicable analyses.

Name of constituent	Cas no.(optional)	Minimum	Maximum	Unit (ppm or % only)
"RED" IRON		90	100	%
STAINLESS STEEL		0	10	%
PCB's		0	1200	ppm
~~Carbon Disulfide~~		~~0~~	~~.01~~	~~ppm~~

Section 2- Radiological Characteristics

For help in completing this section of the form, call 5-WAST or 5-4000.

	Range minimum		maximum	Unit (Cv/g or Ci/l)
General				
☐ Alpha	_____	to	_____	_____
☐ Beta	_____	to	_____	_____
☐ Gamma	_____	to	_____	_____
TRU radionuclides				
☐ None present				
☐ Am-241	_____	to	_____	_____
☐ Am-243	_____	to	_____	_____
☐ Cf-249	_____	to	_____	_____
☐ Cf-251	_____	to	_____	_____
☐ Cm-243	_____	to	_____	_____
☐ Cm-245	_____	to	_____	_____
☐ Cm-247	_____	to	_____	_____
☐ Pu-238	_____	to	_____	_____
☐ Pu-239	_____	to	_____	_____
☐ Pu-240	_____	to	_____	_____
☐ Pu-242	_____	to	_____	_____
Fission products				
☐ None present				
☐ Ba-140	_____	to	_____	_____
☐ Ce-144	_____	to	_____	_____
☐ Cs-134	_____	to	_____	_____
☐ Cs-137	_____	to	_____	_____
☐ I-129	_____	to	_____	_____
☐ I-133	_____	to	_____	_____
☐ Kr-85	_____	to	_____	_____
☐ Nb-95	_____	to	_____	_____
☐ Ru-106	_____	to	_____	_____
☐ Sb-125	_____	to	_____	_____
☐ Sr-90	_____	to	_____	_____
☐ Tc-99	_____	to	_____	_____
☐ Zr-93	_____	to	_____	_____
☐ Zr-95	_____	to	_____	_____
Activation products				
☐ None present				
☐ As -74	_____	to	_____	_____
☐ Be-7	_____	to	_____	_____
☐ C-14	_____	to	_____	_____
☐ Co-56	_____	to	_____	_____
☐ Co-57	_____	to	_____	_____
☐ Co-58	_____	to	_____	_____
☐ Co-60	_____	to	_____	_____
☐ Cr-51	_____	to	_____	_____
☐ Eu-152	_____	to	_____	_____
☐ Mn-52	_____	to	_____	_____
☐ Mn-54	_____	to	_____	_____
☐ Nb-94	_____	to	_____	_____
☐ Ni-59	_____	to	_____	_____
☐ Ni-63	_____	to	_____	_____
☐ Rb-83	_____	to	_____	_____
☐ Rb-84	_____	to	_____	_____
☐ Se-75	_____	to	_____	_____
☐ Sr-82	_____	to	_____	_____
☐ Sr-85	_____	to	_____	_____
☐ V-48	_____	to	_____	_____
☐ Y-88	_____	to	_____	_____
☐ Zn-65	_____	to	_____	_____
☐ Zr-88	_____	to	_____	_____

	Range minimum		maximum	Unit (Cv/g or Ci/l)
Other				
☐ None present				
☐ Am-242	_____	to	_____	_____
☐ Bi-207	_____	to	_____	_____
☐ Bi-210	_____	to	_____	_____
☐ Cf-250	_____	to	_____	_____
☐ Cf-252	_____	to	_____	_____
☐ Cm-244	_____	to	_____	_____
☐ H-3	_____	to	_____	_____
☐ Pa-231	_____	to	_____	_____
☐ Pb-210	_____	to	_____	_____
☐ Po-210	_____	to	_____	_____
☐ Pu-236	_____	to	_____	_____
☐ Pu-241	_____	to	_____	_____
☐ Ra-226	_____	to	_____	_____
☐ Ra-228	_____	to	_____	_____
☐ Th-230	_____	to	_____	_____
☐ Th-232	_____	to	_____	_____
☐ U-232	_____	to	_____	_____
☐ U-233	_____	to	_____	_____
☐ U-234	_____	to	_____	_____
☐ U-235	_____	to	_____	_____
☐ U-236	_____	to	_____	_____
☐ U-238	_____	to	_____	_____
Add'l radionuclides				
☐ No additional radionuclides present				
_____	_____	to	_____	_____
_____	_____	to	_____	_____
_____	_____	to	_____	_____
_____	_____	to	_____	_____
_____	_____	to	_____	_____
_____	_____	to	_____	_____
_____	_____	to	_____	_____
_____	_____	to	_____	_____
_____	_____	to	_____	_____
_____	_____	to	_____	_____
_____	_____	to	_____	_____
_____	_____	to	_____	_____
_____	_____	to	_____	_____
_____	_____	to	_____	_____
_____	_____	to	_____	_____

Contamination Type: *Check as many as apply.*

☐ Volume Contamination

☐ Surface Contamination

Section 3 - Wastewater Characteristics

For help in completing this section of the form, call 7-4301.

Identify presence of contaminants			Minimum	Maximum	Unit (ppm or % only)	Analytical meiioc	
Aluminum	☐ None	☐ < 5.0 ppm	_____	to _____	_____	☐ TCLP	☐ ta
Boron	☐ None	☐ < 5.0 ppm	_____	to _____	_____	☐ TCLP	☐ Tota
Cobalt	☐ None	☐ < 1.0 ppm	_____	to _____	_____	☐ TCLP	☐ Tota
Copper	☐ None	☐ < 1.0 ppm	_____	to _____	_____	☐ TCLP	☐ ta
Vanadium	☐ None	☐ < 0.10 ppm	_____	to _____	_____	☐ TCLP	☐ ta
Zinc	☐ None	☐ < 95.4 ppm	_____	to _____	_____	☐ TCLP	☐ ta

Maximum daily flow when discharge occurs: _____ ☐ Gallons ☐ Liters

Average daily flow when discharge occurs: _____ ☐ Gallon ☐ Li s

Estimated number of days per year that discharge will occur: _____

Estimated total volume per year discharged to the Radioactive Liquid Waste Collection System at TA-50-1: _____ ☐ Gallon ☐ Liters

For TA-55 use only. Wastewater will be discharged through one of the following:

☐ Acid line ☐ Caustic line ☐ Industrial waste line

Section 4 - Additional Information

If additional information is available on the chemical, physical, or radiological character of the waste not covered on this form, provide it below:

PCB concentrations based on guidance in TSCA proposed ruling + represent an estimated concentration ~~[illegible]~~ in the film found within the tank.

WASTE GENERATOR CERTIFICATION: *Based on my knowledge of the waste and/or chemical/physical analysis, I certify that the information on this form is correct. I understand that this information will be made available to regulatory agencies and that there are significant penalties for submitting false information, including the possibility of fines and imprisonment for knowing violations.*

Signature	Date
Tommy R. Hemons	9-11-96

Controlled Air Incinerator
Swipe Sampling For Non Metallic Analytes
All Measurements in µg/swipe

Section	Location ID	CN	PCBs	bis (2-ethyl hexyl phthalate)	Acetone	Methylene Chloride	2-Butanone	Naphthalene	1,1,1,2 Tetrachloroethane	4-Methyl-2-Pentanone	Trans-1,2-Dichloroethene	2-Hexanone	Carbon Disulfide
				SVOCs	VOCs	VOCs	VOCs	VOCs	VOCs	VOCs	VOCs	VOCs	VOCs
Reporting Limit		0.5	1	100	5	2.5	2.5	2.5	2.5	2.5	2.5	2.5	2.5
Glove Box	CAI-GB-1	0.6	ND	ND	7	9.6	5.9	ND	ND	ND	ND	ND	ND
Glove Box	CAI-GB-2	ND	ND	ND	ND	6.8	ND	ND	ND	ND	ND	ND	ND
Glove Box	CAI-GB-3	1	ND	ND	ND	9.1	6.7	ND	ND	ND	ND	ND	ND
Glove Box	CAI-GB-4	0.5	ND	ND	ND	9.7	ND	ND	ND	ND	ND	ND	ND
Glove Box	CAI-GB-5	0.5	ND	ND	ND	7.9	ND	ND	ND	ND	ND	ND	ND
Absorb. Tower	CAI-AT-1	ND	ND	ND	5.8	4.7 J	ND	ND	ND	ND	ND	ND	ND
Absorb. Tower	CAI-AT-2	ND	ND	ND	ND	8.1	ND	ND	ND	ND	ND	ND	ND
Absorb. Tower	CAI-AT-3	ND	ND	ND	ND	6.7	ND	ND	ND	ND	ND	ND	ND
HEPA	CAI-HP-1	0.8	ND	ND	5.6	7.2	ND	ND	ND	ND	ND	ND	ND
HEPA	CAI-HP-2	ND	ND	181	6.7	9.7	ND	ND	ND	ND	ND	ND	ND
HEPA	CAI-HP-3	ND	ND	ND	ND	ND	ND	ND	ND	ND	ND	ND	ND
HEPA	CAI-HP-4	ND	ND	ND	23	9.1	6.7	48	ND	ND	ND	ND	ND
HEPA	CAI-HP-5* #	ND	ND	ND	5.7	5.2	ND	2.3 J	3.2 J	ND	ND	ND	ND
Solid Feed	CAI-SF-1*	ND	ND	ND	10 B	ND	37	ND	ND	32	ND	ND	ND
Solid Feed	CAI-SF-2*	ND	ND	ND	5.9 B	ND	ND	ND	ND	2.9	ND	ND	ND
Solid Feed	CAI-SF-3*	ND	ND	25 J	5.6 B	ND	9.1	ND	ND	4.6 J	ND	ND	ND
Solid Feed	CAI-SF-4 #	ND	ND	ND	ND	ND	ND	ND	ND	ND	ND	ND	ND
Solid Feed	CAI-SF-5*				ND	9.8 B	4.6 J	ND	ND	36.3	9.8	ND	ND
Activated Carbon	CAI-AC-1	ND	ND	94 J	7.9	8.1	15	ND	ND	ND	ND	ND	ND
Activated Carbon	CAI-AC-2	0.8	ND	33 J	6.2	9.2	14	3.7 J	ND	ND	ND	ND	ND
Activated Carbon	CAI-AC-3	ND	ND	45 J	8.1	7.9	5.2	ND	ND	ND	ND	ND	ND
Quench Tower	CAI-QT-1	ND	ND	ND	ND	7.9	22	ND	ND	ND	ND	ND	ND
Quench Tower	CAI-QT-2	ND	ND	ND	ND	6.9	ND	ND	ND	ND	ND	ND	ND
Quench Tower	CAI-QT-3	0.6	ND	ND	ND	7.6	ND	ND	ND	ND	ND	ND	ND
Exhaust	CAI-EX-1	ND	.32 J	ND	5.7	7.3 B	5.5	ND	ND	ND	7.3	4.9 J	ND
Exhaust	CAI-EX-2	ND		ND	ND	12.7 B	ND	ND	ND	ND	12.7	ND	ND
Exhaust	CAI-EX-3	ND	ND	ND	ND	8.4 B	ND	ND	ND	ND	8.4	ND	ND
Liquid Feed	CAI-LF-1	ND	240	ND	ND	8.9 B	ND	ND	ND	ND	8.9	ND	ND
Liquid Feed	CAI-LF-2	ND	.63 J	ND	ND	5.1 B	ND	ND	ND	ND	5.1	ND	3.8 J
Liquid Feed	CAI-LF-3	ND	1.1	ND	ND	4.9 B	10.2	ND	ND	ND	4.9 J	ND	ND
Liquid Feed	CAI-LF-4 #	ND	ND	ND	ND	4.5 B	60.7	ND	ND	ND	4.5 J	ND	ND
Liquid Feed	CAI-LF-5**	ND	.57 J	ND	ND	4.9 B	ND	ND	ND	ND	4.9 J	ND	3.3 J

LF-1 TANK 2

LF-2, LF-3 } TANK 3

BLANK →

.0027 ppm/L

* For more data on analytes for CAI-SF-1,2,3,5 CAI-HP-5 see attached.

Field Blanks ** Duplicate of CAI-LF-2

** Duplicate of LF-2

Controlled Air Incinerator Metal Analysis Data
All Reported Data in µg/swipe

CAI-JP-1 (TCLP) units in mg/L.

Section	Location ID	Antimony	Arsenic	Barium	Beryllium	Cadmium	Chromium	Lead	Mercury	Nickel	Selenium	Silver	Thallium
Reporting Limit		0.25	0.25	0.25	0.05	0.05	0.05	0.15	0.01	0.1	0.25	0.1	0.4
Glove Box	CAI-GB-1	12	0.25	190	0.05	0.03	68	2.9	0.01	41	0.25	0.01	0.4
Glove Box	CAI-GB-2	10	0.25	240	0.05	0.03	38	1.2	0.01	25	0.25	0.01	0.4
Glove Box	CAI-GB-3	11	0.25	210	0.05	0.1	29	1	0.01	21	0.25	0.01	0.4
Glove Box	CAI-GB-4	12	0.25	160	0.05	0.08	28	1.4	0.01	15	0.25	0.01	0.4
Glove Box	CAI-GB-5	10	0.25	180	0.05	0.03	13	0.91	0.01	10	0.25	0.01	0.4
Absorb. Tower	CAI-AT-1	15	0.26	290	ND	0.44	9.3	3.7	0.018	22	ND	ND	ND
Absorb. Tower	CAI-AT-2	13	0.31	270	ND	1.2	14	4.3	0.09	66	ND	0.12	ND
Absorb. Tower	CAI-AT-3	10	0.13	180	ND	ND	16	1.1	0.024	59	ND	ND	ND
											ND		ND
HEPA	CAI-HP-1	10	0.26	250	ND	0.11	31	2.5	0.58	34	ND	ND	ND
HEPA	CAI-HP-2	10	ND	160	ND	0.09	28	4	0.017	18	ND	0.16	ND
HEPA	CAI-HP-3	8.8	ND	270	ND	ND	24	0.52	ND	30	ND	ND	ND
HEPA	CAI-HP-4	8.1	ND	240	ND	0.06	9.4	1.1	0.028	7.5	ND	ND	ND
HEPA	CAI-HP-5 #	11	ND	160	ND	ND	2.2	0.24	ND	0.64	ND	ND	ND
Solid Feed	CAI-SF-1	11	0.84	130	0.06	ND	250	3.4	0.06	59	ND**	ND	ND**
Solid Feed	CAI-SF-2	15	0.63	250	0.06	0.56	13	12	0.060	10	ND	ND	ND
Solid Feed	CAI-SF-3	25	0.91	270	0.06	0.49	31	60	0.1	17	ND**	ND	ND**
Solid Feed	CAI-SF-4 #	10	0.13	250	0.06	ND	3.8	0.3	ND	4.6	ND	ND	ND
Solid Feed	CAI-SF-5 (DECON)	13	ND	120	ND	ND	1.3	0.25	ND	0.26	ND	ND	ND
Activated Carbon	CAI-AC-1	11	1.5	200	0.06	0.48	62	24	3.1	100	0.56	0.19	ND
Activated Carbon	CAI-AC-2	9.3	0.54	170	ND	0.14	31	7.3	5.2	38	ND	ND	ND
Activated Carbon	CAI-AC-3	9.5	0.27	170	ND	0.2	53	3.8	0.020	44	ND	ND	ND
													ND
Quench Tower	CAI-QT-1	13	ND	240	ND	0.24	7.9	2.6	0.015	25	ND	ND	ND
Quench Tower	CAI-QT-2	12	ND	260	ND	0.33	5.4	3.2	0.018	10	ND	ND	ND
Quench Tower	CAI-QT-3 ^	107	1.3	200	0.15	3.4	4.6	180	ND	2.9	ND	ND	ND
Exhaust	CAI-EX-1	11	0.34	110	ND	ND	13	2.3	ND	8.1	ND	ND	ND
Exhaust	CAI-EX-2	9.1	ND	130	ND	ND	1.5	0.59	ND	0.6	ND	ND	ND
Exhaust	CAI-EX-3	9	ND	110	ND	ND	1.4	0.51	ND	1.2	ND	ND	ND
Liquid Feed	CAI-LF-1	11	ND	100	ND	ND	0.59	0.25	ND	ND	ND	ND	ND
Liquid Feed	CAI-LF-2	12	ND	140	ND	ND	3.8	0.57	ND	2.1	ND	ND	ND
Liquid Feed	CAI-LF-3	11	ND	130	ND	0.06	2.3	0.77	ND	1	ND	ND	ND
Liquid Feed	CAI-LF-4#	10	ND	98	ND	ND	0.45	0.21	ND	ND	ND	ND	ND
Duplic. of LF-2	CAI-LF-5	13	ND	120	ND	ND	4.7	0.71	ND	2.8	ND	ND	ND
Reporting Limits (mg/L)		-	0.1	1	-	0.05	0.1	0.03	0.002	-	0.05	0.1	-
TCLP Limit (mg/L)			5	100		1	5	5	0.2		1	5	
JadePack Brick	CAI-JP-1 (TCLP)	-	ND	ND	-	ND	0.1	ND	ND	-	ND	ND	-

* Samples in blue shaded area are greater than the Upper Tolerance Limit

** For these two samples, the detection limits were 10X higher than the reporting limits listed.

Field Blank

^ Swipe of Refractory at end of Hot Duct.

3" x 40" length
dia

Stanlex Q-10
red iron

500 lb

ORIGINAL

RECEIVED AUG 2 8 1996

Los Alamos
National Laboratory

WASTE PROFILE FORM

Account Information	For rapid processing, complete **all sections** in black or blue ink and mail this form to Waste Services Group at MS J579	Reference Number
-		24771

Waste Generator's Name (Print)	Znumber	Waste Management Coordinator's Name (Print)	Znumber
Tommy HERNANDEZ	082298	Don Stout	112427

Generator's Group	Generator's Telephone	Generator's Mail Stop	Waste Stream Technical Area	Building	Room
EM/ER D&D	667-3459	M769	50	37	

Waste Accumulation
Check as many as apply.

- ☐ Satellite accumulation area --> site no.: _____
- ☐ Less than 90 day accumulation area --> site no.: _____
- ☐ Radioactive Materials Management Area (RMMA) --> site no.: _____
- ☒ None of the above

Method of Characterization
Check as many as apply.

- ☒ Acceptable Knowledge (AK)
- ☐ Analysis attached --> sample/request no. _____
- ☐ MSDS attached
- ☐ Request for analysis

Section 1- Chemical and Physical Characteristics

For help in completing this section of the form, call 5-WAST or 5-4000.

Waste Type
Check only one.

- ☒ Unused/unspent chemical
  Check *Waste Classes* and *Associated Documentation* Only
- ☐ Process waste/spent chemical
  Complete all of Section 1.

Waste Classes
Check as many as apply.

- ☐ On-going generation
- ☒ One-time generation
- ☐ Radioactive (complete Sec. 2)
- ☒ Non-radioactive
- ☐ Wastewater (complete Sec. 3)
- ☐ Classified/Sensitive

Associated Documentation
Check as many as apply.

- ☐ Process SOP --> no.: _____
- ☐ RMMA OP --> no.: _____
- ☐ WM SOP --> no.: _____
- ☐ Other --> _____
- ☒ None --> describe below

Waste Category
Check as many as apply.

- ☐ Solvent
- ☐ Degreaser
- ☐ Dioxin
- ☐ Electroplating
- ☐ Treated hazardous waste residue
- ☐ Explosive process waste
- ☐ Infectious/biological waste
- ☐ Beryllium
- ☐ Asbestos-friable
- ☐ Asbestos-nonfriable
- ☐ Empty containers
- ☐ PCB (<50 ppm)
  - ☐ PCB (50 - 500 ppm)
  - ☐ PCB (> 500 ppm)
  - → id. no. : _____
- ☒ Not applicable --> describe below

Waste Sources
Check as many as apply.

- ☐ Research and development
- ☐ Maintenance
- ☐ Construction
- ☐ Material processing
- ☒ Decon/decom
- ☐ Investigation derived
- ☐ Remediation
- ☐ UST - petroleum
- ☐ UST - non-petroleum
- ☐ Generator treatment
- ☐ Interim/permitted treatment
- ☐ Industrial sludge
- ☐ Sanitary sludge
- ☐ Abatement

Waste Matrix
Check only one.

Gas

- ☐ ≤ 1.5 Atmospheres
- ☐ > 1.5 Atmospheres

Liquid

- ☐ Aqueous
- ☐ Organic
- ☐ Inorganic

Solid

- ☐ Powder/ash
- ☒ Solid
- ☐ Absorbed liquid

Matrix Type
Check only one.

- ☒ Homogeneous
- ☐ Heterogeneous --> describe below

Waste/Process Description

Activated carbon from controlled air incinerator. Carbon was not used although system was charged with this material. This material is not contaminated

ORIGINAL

Section 1- Chemical and Physical Characteristics (continued)

Ignitability (degrees F.)
Check only one.

- ☐ < 73
- ☐ 73-99
- ☐ 100-139
- ☐ 140-200
- ☐ > 200
- ☐ Ignitable solid
- ☐ DOT oxidizer
- ☒ Not ignitable

Corrosivity (pH)
Check only one.

- ☐ ≤ 2.0
- ☐ 2.1-4.0
- ☐ 4.1-6.0
- ☐ 6.1-9.0
- ☐ 9.1-12.4
- ☐ ≥ 12.5
- ☐ Liquid corrosive to steel
- ☒ Not aqueous

Reactivity
Check as many as apply.

- ☐ Unstable
- ☐ Water reactive
- ☐ Pyrophoric
- ☐ Cyanide bearing
- ☐ Sulfide bearing
- ☐ Shock sensitive
- ☐ Explosive - class _____
- ☒ Non-reactive

Boiling Point (degrees F.)
Check only one.

- ☐ ≤ 95
- ☐ > 95
- ☒ Not applicable

Identify presence of contaminants.			Minimum	Maximum	Unit (ppm or % only)	Analytical method
Toxicity Characteristic Metals						
Arsenic	☒ None	☐ < 5.0 ppm		to		☐ TCLP ☐ Total
Barium	☐ None	☐ < 100.0 ppm		to		☐ TCLP ☐ Total
Cadmium	☐ None	☐ < 1.0 ppm		to		☐ TCLP ☐ Total
Chromium	☐ None	☐ < 5.0 ppm		to		☐ TCLP ☐ Total
Lead	☐ None	☐ < 5.0 ppm		to		☐ TCLP ☐ Total
Mercury	☐ None	☐ < 0.2 ppm		to		☐ TCLP ☐ Total
Selenium	☐ None	☐ < 1.0 ppm		to		☐ TCLP ☐ Total
Silver	☒ None	☐ < 5.0 ppm		to		☐ TCLP ☐ Total
Toxicity Characteristic Organic Compounds						
Benzene	☒ None	☐ < 0.5 ppm		to		☐ TCLP ☐ Tota
Carbon tetrachloride	☐ None	☐ < 0.5 ppm		to		☐ TCLP ☐ Tota
Chlorobenzene	☐ None	☐ < 100.0 ppm		to		☐ TCLP ☐ Total
Chloroform	☐ None	☐ < 6.0 ppm		to		☐ TCLP ☐ Total
Cresol	☐ None	☐ < 200.0 ppm		to		☐ TCLP ☐ Tota
1,4-dichlorobenzene	☐ None	☐ < 7.5 ppm		to		☐ TCLP ☐ Tota
1,2-Dichloroethane	☐ None	☐ < 0.5 ppm		to		☐ TCLP ☐ Total
1,1-Dichloroethylene	☐ None	☐ < 0.7 ppm		to		☐ TCLP ☐ Total
2,4-Dinitrotoluene	☐ None	☐ < 0.13 ppm		to		☐ TCLP ☐ Tota
Hexachlorobenzene	☐ None	☐ < 0.13 ppm		to		☐ TCLP ☐ Tota
Hexachlorobutadiene	☐ None	☐ < 0.5 ppm		to		☐ TCLP ☐ Tota
Hexachloroethane	☐ None	☐ < 3.0 ppm		to		☐ TCLP ☐ Total
Methyl ethyl ketone	☐ None	☐ < 200.0 ppm		to		☐ TCLP ☐ Total
Nitrobenzene	☐ None	☐ < 2.0 ppm		to		☐ TCLP ☐ Tota
Pentachlorophenol	☐ None	☐ < 100.0 ppm		to		☐ TCLP ☐ Tota
Pyridine	☐ None	☐ < 5.0 ppm		to		☐ TCLP ☐ Total
Perchloroethylene or tetrachloroethylene	☐ None	☐ < 0.7 ppm		to		☐ TCLP ☐ Total
Trichloroethylene	☐ None	☐ < 0.5 ppm		to		☐ TCLP ☐ Tota
2,4,5-Trichlorophenol	☐ None	☐ < 400.0 ppm		to		☐ TCLP ☐ Tota
2,4,6-Trichlorophenol	☐ None	☐ < 2.0 ppm		to		☐ TCLP ☐ Tota
Vinyl chloride	☒ None	☐ < 0.2 ppm		to		☐ TCLP ☐ Total

Additional Chemical Constituents and Contaminants (for hazardous constituents, see AR 10-3, Appendix A)
List all other constituents (including inerts) not identified above and attach any applicable analyses.

Name of constituent	Cas no.(optional)	Minimum	Maximum	Unit (ppm or % only)
Activated carbon		100	100	%

Section 2- Radiological Characteristics

For help in completing this section of the form, call 5-WAST or 5-4000.

	Range minimum		maximum	Unit (Ci/g or Ci/l)
General				
☐ Alpha	_____	to	_____	_____
☐ Beta	_____	to	_____	_____
☐ Gamma	_____	to	_____	_____
TRU radionuclides				
☐ None present				
☐ Am-241	_____	to	_____	_____
☐ Am-243	_____	to	_____	_____
☐ Cf-249	_____	to	_____	_____
☐ Cf-251	_____	to	_____	_____
☐ Cm-243	_____	to	_____	_____
☐ Cm-245	_____	to	_____	_____
☐ Cm-247	_____	to	_____	_____
☐ Pu-238	_____	to	_____	_____
☐ Pu-239	_____	to	_____	_____
☐ Pu-240	_____	to	_____	_____
☐ Pu-242	_____	to	_____	_____
Fission products				
☐ None present				
☐ Ba-140	_____	to	_____	_____
☐ Ce-144	_____	to	_____	_____
☐ Cs-134	_____	to	_____	_____
☐ Cs-137	_____	to	_____	_____
☐ I-129	_____	to	_____	_____
☐ I-133	_____	to	_____	_____
☐ Kr-85	_____	to	_____	_____
☐ Nb-95	_____	to	_____	_____
☐ Ru-106	_____	to	_____	_____
☐ Sb-125	_____	to	_____	_____
☐ Sr-90	_____	to	_____	_____
☐ Tc-99	_____	to	_____	_____
☐ Zr-93	_____	to	_____	_____
☐ Zr-95	_____	to	_____	_____
Activation products				
☐ None present				
☐ As -74	_____	to	_____	_____
☐ Be-7	_____	to	_____	_____
☐ C-14	_____	to	_____	_____
☐ Co-56	_____	to	_____	_____
☐ Co-57	_____	to	_____	_____
☐ Co-58	_____	to	_____	_____
☐ Co-60	_____	to	_____	_____
☐ Cr-51	_____	to	_____	_____
☐ Eu-152	_____	to	_____	_____
☐ Mn-52	_____	to	_____	_____
☐ Mn-54	_____	to	_____	_____
☐ Nb-94	_____	to	_____	_____
☐ Ni-59	_____	to	_____	_____
☐ Ni-63	_____	to	_____	_____
☐ Rb-83	_____	to	_____	_____
☐ Rb-84	_____	to	_____	_____
☐ Se-75	_____	to	_____	_____
☐ Sr-82	_____	to	_____	_____
☐ Sr-85	_____	to	_____	_____
☐ V-48	_____	to	_____	_____
☐ Y-88	_____	to	_____	_____
☐ Zn-65	_____	to	_____	_____
☐ Zr-88	_____	to	_____	_____

	Range minimum		maximum	Unit (Ci/g or Ci/l)
Other				
☐ None present				
☐ Am-242	_____	to	_____	_____
☐ Bi-207	_____	to	_____	_____
☐ Bi-210	_____	to	_____	_____
☐ Cf-250	_____	to	_____	_____
☐ Cf-252	_____	to	_____	_____
☐ Cm-244	_____	to	_____	_____
☐ H-3	_____	to	_____	_____
☐ Pa-231	_____	to	_____	_____
☐ Pb-210	_____	to	_____	_____
☐ Po-210	_____	to	_____	_____
☐ Pu-236	_____	to	_____	_____
☐ Pu-241	_____	to	_____	_____
☐ Ra-226	_____	to	_____	_____
☐ Ra-228	_____	to	_____	_____
☐ Th-230	_____	to	_____	_____
☐ Th-232	_____	to	_____	_____
☐ U-232	_____	to	_____	_____
☐ U-233	_____	to	_____	_____
☐ U-234	_____	to	_____	_____
☐ U-235	_____	to	_____	_____
☐ U-236	_____	to	_____	_____
☐ U-238	_____	to	_____	_____
Add'l radionuclides				
☐ No additional radionuclides present				
_____	_____	to	_____	_____
_____	_____	to	_____	_____
_____	_____	to	_____	_____
_____	_____	to	_____	_____
_____	_____	to	_____	_____
_____	_____	to	_____	_____
_____	_____	to	_____	_____
_____	_____	to	_____	_____
_____	_____	to	_____	_____
_____	_____	to	_____	_____
_____	_____	to	_____	_____
_____	_____	to	_____	_____
_____	_____	to	_____	_____
_____	_____	to	_____	_____

Contamination Type: *Check as many as apply.*

☐ Volume Contamination

☐ Surface Contamination

Section 3 - Wastewater Characteristics

For help in completing this section of the form, call 7-4301.

Identify presence of contaminants			Minimum	Maximum	Unit (ppm or % only)	Analytical method
Aluminum	☐ None	☐ < 5.0 ppm	_____	to _____	_____	☐ TCLP ☐ Total
Boron	☐ None	☐ < 5.0 ppm	_____	to _____	_____	☐ TCLP ☐ Total
Cobalt	☐ None	☐ < 1.0 ppm	_____	to _____	_____	☐ TCLP ☐ Total
Copper	☐ None	☐ < 1.0 ppm	_____	to _____	_____	☐ TCLP ☐ Total
Vanadium	☐ None	☐ < 0.10 ppm	_____	to _____	_____	☐ TCLP ☐ Total
Zinc	☐ None	☐ < 95.4 ppm	_____	to _____	_____	☐ TCLP ☐ Total

Maximum daily flow when discharge occurs: _____ ☐ Gallons ☐ Liters

Average daily flow when discharge occurs: _____ ☐ Gallons ☐ Liters

Estimated number of days per year that discharge will occur: _____

Estimated total volume per year discharged to the Radioactive Liquid Waste Collection System at TA-50-1: _____ ☐ Gallons ☐ Liters

For TA-55 use only. Wastewater will be discharged through one of the following:

☐ Acid line ☐ Caustic line ☐ Industrial waste line

Section 4 - Additional Information

If additional information is available on the chemical, physical, or radiological character of the waste not covered on this form, provide it below:

WASTE GENERATOR CERTIFICATION: *Based on my knowledge of the waste and/or chemical/physical analysis, I certify that the information on this form is correct. I understand that this information will be made available to regulatory agencies and that there are significant penalties for submitting false information, including the possibility of fines and imprisonment for knowing violations.*

Signature	Date
Tommy L. Leonard	8/26/96

SCIENTIFIC ECOLOGY GROUP, INC.

Monday, August 4, 1997

Troy Eshleman
Los Alamos National Labs
901 18th Street - Suite #215
Los Alamos, NM. 87544

Dear Mr Eshleman:

In compliance with the requirements of 10 CFR 20, Appendix F, Section III, C.1, the attached signed shipping manifest copies are your notice of receipt and acceptance of the radioactive waste materials specified on the manifests.

Manifest Number	Date Received
1777-TA-50-1-97-3	08/04/1997

This is acknowledgement of receipt only. Any manifest discrepancies found during manifest review, unloading or processing will be listed on page 2 of this letter.

Thank you for your business.

Sincerely,

Fred Schulz

T. Fred Schulz
Supervisor
Shipping and Receiving

cc: Manifest File
Shipping and Receiving file

Post-it™ Fax Note 7671	Date 12-Aug-97	# of pages 3
To TROY ESHLEMAN	From CHRIS PLENO	
Co./Dept. STS-D.	Co. SEG	
Phone # 505-662-1329	Phone # 423-220-1623	
Fax # 505-661-9699	Fax # 1612	

SCIENTIFIC ECOLOGY GROUP, INC.

Manifest Discrepancies

None.

CONTAINS HAZARDOUS MATERIALS

STRAIGHT BILL OF LADING
ORIGINAL - NOT NEGOTIABLE

HMTF #17846

Shipper's No. TA-50-1-97-3

CARRIER: Hittman Transportation Services, Inc SCAC

Carrier's No. TRK# 224 TLC 34034

Date 7-31-97

TO:
Consignee Scientific Ecology Group
Street 1560 Bear Creek Road
Destination Oakridge, TN Zip 37830

FROM:
Shipper Los Alamos National Laboratory
Street PO Box 1663
Origin Los Alamos, NM Zip 87545

Route:

Vehicle Number

No. of Packages	HM	Kind of Packages, Description of Articles (IF HAZARDOUS MATERIALS - PROPER SHIPPING NAME)	HAZARD CLASS	I.D. Number	WEIGHT (subject to correction)	RATE	LABELS REQUIRED (for exception)
1	X	Radioactive Material Surface	7	UN2913	8 Tons		
		contaminated object					
		(1- Sealand Container)					
		SCO-I, Physical Form Solid, Chemical					
		Form Elemental, Fissile Excepted					
		Total Radionuclides Pu 241 2.0×10^{-5} Ci - 7.4×10^{-7} TBq - 2.0×10^{-7} g					
		Am 241 3.0×10^{-6} Ci - 1.1×10^{-7} TBq - 8.8×10^{-7} g					
		ERG #162 This shipment is subject to the Exclusive use provision of					
		49 CFR 173, #27(6), Exclusive use must be maintained throughout the course of this shipment.					

Remit C.O.D. to:
Address:
City: State: Zip:

COD Amt: $

C.O.D. FEE:
Prepaid ☐
Collect ☐ $

NOTE — Where the rate is dependent on value, shippers are required to state specifically in writing the agreed or declared value of the property. The agreed or declared value of the property is hereby specifically stated by the shipper to be not exceeding $ Per

FREIGHT CHARGES
☐ PREPAID ☐ COLLECT

RECEIVED, subject to the classifications and lawfully filed tariffs in effect on the date of issue of this Bill of Lading, the property described above in apparent good order, except as noted (contents and condition of contents of packages unknown), marked, consigned, and destined as indicated above which said carrier (the word carrier being understood throughout this contract as meaning any person or corporation in possession of the property under the contract) agrees to carry to its usual place of delivery at said destination, if on its own route, otherwise to deliver to another carrier on the route to said destination. It is mutually agreed as to each carrier of all or any of said property over all or any portion of said route to destination and as to each party at any time interested in all or any said property, that every service to be performed hereunder shall be subject to all the conditions not prohibited by law, whether printed or written, herein contained including those on the back hereof, which are hereby agreed to by the shipper and accepted for himself and his assigns.

Shipper hereby certifies that he is familiar with all the bill of lading terms and conditions in the governing classification and the said terms and conditions are hereby agreed to by the shipper and accepted for himself and his assigns.

This is to certify that the commodities described on this bill of lading have been packaged, marked, labeled, and are in proper condition for transportation according to the applicable regulations of the Department of Transportation.

Per

PLACARDS SUPPLIED Radioactive PLACARDS REQUIRED ☒ YES ☐ NO — FURNISHED BY CARRIER

DRIVER SIGNATURE:

SHIPPER: Chemical Waste Management, Inc.
PER: Larry Glover
DATE: 7-31-97

CARRIER: Hittman Trans
PER:
DATE: 7-31-97

EMERGENCY RESPONSE TELEPHONE NUMBER: (505) 667-6211

Monitored at all times the Hazardous Material is in transportation including storage incidental to transportation (172.604).

CONTAINS HAZARDOUS MATERIALS

RECEIVED AUG 1997 SEG

SD MYERS

CERTIFICATE OF DESTRUCTION/RECYCLE

S.D. Myers, Inc. 180 South Ave. Tallmadge, OH 44278 Phone 330-630-7000

Document # - 0086892- 1
EPA ID# - OHD053576294
Date - 12/19/96
P.O. Number - C-4125

This document is to certify that S.D. MYERS, INC. has completed the disposal of your tank by utilizing our RESOURCE RECOVERY PROCESS.

Under civil and criminal penalties of law for the making or submission of false or fraudulent statements or representations (18 U.S.C. 1001 and 15 U.S.C.2615), I certify that the information contained in or accompanying this document is true, accurate, and complete. As to the identified section(s) of this document for which I cannot personally verify truth and accuracy, I certify as the company official having supervisory responsibility for the persons who, acting under my direct instruction, made the verification that this information is true, accurate, and complete.

Generator: CHEM WASTE MANAGEMENT
Owner: P.O. BOX 1663 MSJ593
Customer: LOS ALAMOS NM
(505)667-7579

Generator: LOS ALAMOS NAT'L LAB
Owner: P.O. BOX 1663/MS J593
Customer: LOS ALAMOS NM B/545
(505)667-7579

R-No.	Serial Number	Cust Ref No.	Wt in Kg.	PPM	Liq	Incoming Manifest	Date Out of Service	Date Destroyed
0040753	C96073327	Tank	413	501	N	96536	09/24/96	11/25/96

Audited By:
Sheree Butcher
Contract Coordinator

Appendix F

Field Log

Name and Address of Persons Making Log Entries

(Appended to Log April 22, 1998 in response to New Mexico Environment Department Request for Supplemental Information, dated March 31, 1998)

Frank J. Primozic
Benchmark Environmental Corporation
117 Longview Drive
White Rock, New Mexico 87544

Shelley Sussman
Benchmark Environmental Corporation
117 Longview Drive
White Rock, New Mexico 87544

John G. Kinker
Benchmark Environmental Corporation
4501 Indian School Road NE
Suite 105
Albuquerque, New Mexico 87110

Jeffrey Miller
Radian International
115 Longview Drive
White Rock, New Mexico 87544

CONTROLLED AIR INCINERATOR CLOSURE SAMPLING
QA/QC LOGBOOK

6/17/96

QA OFFICER: FRANK PRIMOZIC (~~ESH-19~~ BEC)
SAMPLER: RON CONRAD, ALBERT DYE (CONTAINMENT TECH) (ESH-19)
RECORD ENTRY: KALLIE FIRESTONE (ESH-19)
P.E.: JOHN KINICER (BEC)
HP: TROUNG (ESH-5)
RWP BRIEFING: 7:20 AM

METHANOL - VOCs + SVOCs — 1 TRIP BLANK IN COOLER
HEXANES - PCBs — 5 FIELD BLANKS BROUGHT IN CONTAMINANT
WATER - METALS + CYANIDES

★ COMPONENT SAMPLED: SOLID WASTE FEED GLOVEBOX
GLOVES CHANGED AFTER EACH INDIVIDUAL SAMPLING EVENT
LOCATION OF SAMPLING: SEE ATTACHMENT E.4 OF "CLOSURE PLAN."

- BEGIN SAMPLING 9:00 AM, 6/17/96
- QUANTITY OF SAMPLES (CAI-GB-1~~0~~-2-4-3-5): 5 m 1-METALS 1-PCBS 1-SVOCS 1-CYANIDE 1-VOCS
- COMMENT: USING COLORED CIRCLE STICKER TO MARK EACH AREA SWIPED,
- PACKAGED IN BOTTLES
- BOTTLES LABELED
- TAMPER INDICATOR
- SAMPLE SHEET
- C-O-C
- SAMPLES WRAPPED IN BUBBLE WRAP
- COMMENT: SAMPLED STATED, SURFACE SAMPLED SMOOTH (STAINLESS STEEL) BUT COULD FEEL GRIT, SOLVENTS PLACED ON SWIPES W/ EYE DROPPER. ENOUGH TO GET SWIPE WET.

* CANCELED USING PAPER TEMPLATES FOR SAMPLING DUE TO NEGATIVE PRESSURE IN SAMPLING AREAS. WILL TAKE SAMPLES IN AREAS OF SIMILAR SIZE. 100 cm²

- ACTUAL SAMPLING DONE IN CRESCENT SHAPE
  1) VOCs 2) SVOCs 3) METALS 4) CYANIDE 5) PCBs
- USING ~~VERMICULITE~~ BUBBLE WRAP INSTEAD OF VERMICULITE OR SAWDUST
  BLUE ICE USED AS COOLANT
- WILL NOT GENERATE DUPLICATES FOR THIS COMPONENT
  BECAUSE CLEANLINESS (THIS COMPONENT FORMED DATA BASELINE)
- COMMENT: PE WILL REQUEST FROM K. HARGUS THAT
  A SAMPLE BE REMOVED FROM THE ELEVATOR BETWEEN
  COMBUSTION CHAMBER, SOLID WASTE FEED GLOVEBOX
  ALSO ASKED ABOUT SUMP TANK & BLOWDOWN
  BETTER DIAGRAM ~ CLASS I MOD. FOR RCRA PERMIT.
  Frank Ohnoje BEC

Frank - were these components photoed?

★ COMPONENT SAMPLED: HEPA (9:52 am) 4/17/96 (EXIT FROM HEPA FILTRATION RISE TO CARBON ADSORBER)
CAI-HP-1, CAI-HP-2, CAI-HP-3, CAI-HP-4
- QTY OF SAMPLES: 5 EACH AT EACH LOCATION

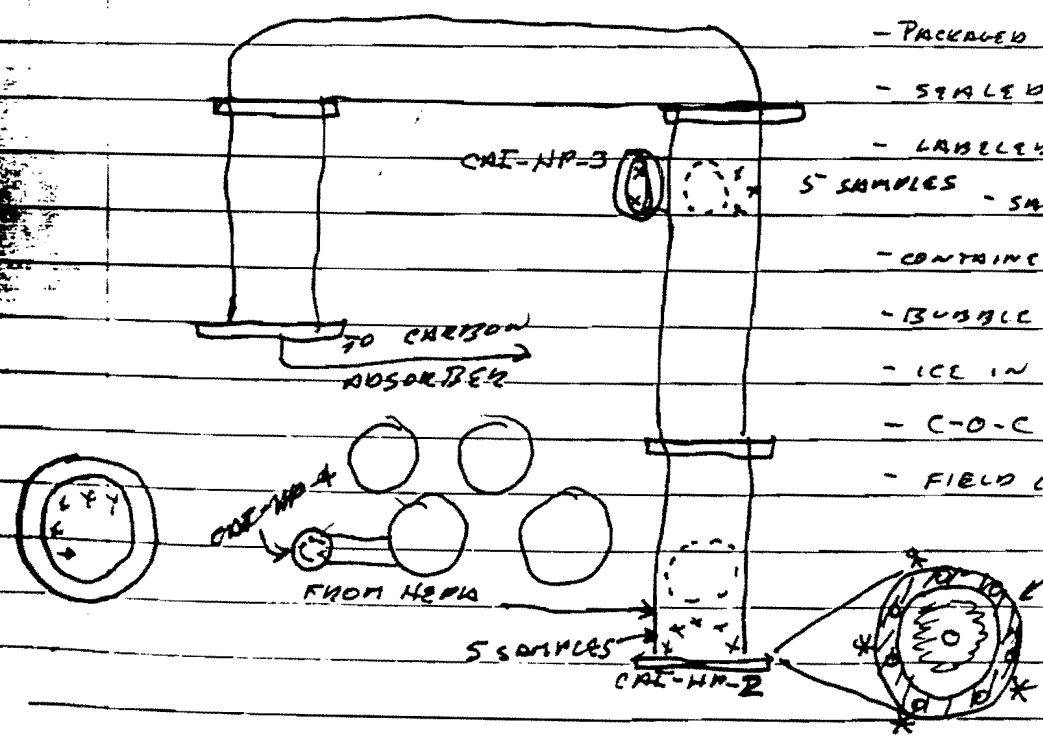

- PACKAGED IN BOTTLES
- SEALED
- LABELED
- SAMPLE ID DOCUMENTED
- CONTAINERS IN COOLER
- BUBBLE WRAPPED
- ICE IN COOLER
- C-O-C COMPLETED
- FIELD LOG COMPLIES W/ REQS.

Frank Ohnoje BEC

COMPONENT SAMPLED: ACTIVATED CARBON ADSORBER CAI-AC-1 CAI-AC-2 CAI-AC-3

TIME/DATE: 10:30 AM 6/17/96

COMMENT: DISCUSSED W/ SAMPLER PROPOSED DUPLICATES.

THE CAI COMPONENTS ARE DIVIDED INTO USED & UNUSED

DUPLICATES WILL BE GENERATED WHEN THE USED COMPONENTS

ARE SAMPLED. IT WAS STATED THIS

WILL MEET THE 5% DUPLICATE CRITERIA.

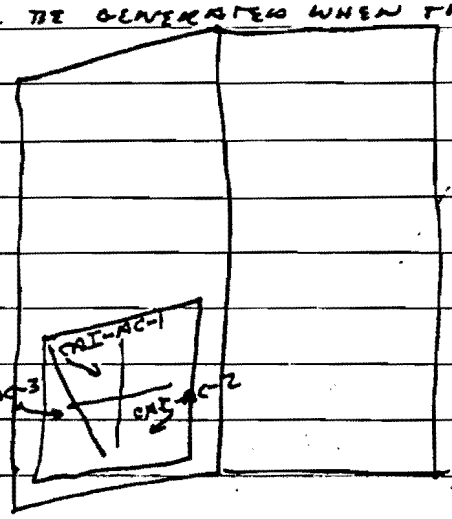

SAMPLES TAKEN IN DIAGONALS

QUANTITY OF SAMPLES - 15 TOTAL

PACKAGED IN BOTTLES

LABELED

SEALED

SAMPLE ID # DOCUMENTED

CONTAINERS IN COOLER

BUBBLE WRAPPED

ICE IN COOLER

C-OC COMPLETED

FIELD LOG COMPLIES W/ REQUIREMENTS

Frank Chinoje BEC

COMPONENT SAMPLED: ADSORBER TOWER CAI-AT-1 -2 -3
(DIRTY-COUNTS FOR DUPLICATE)
- QUANTITY OF SAMPLES - 3 LOCATIONS X 5 SAMPLES = 15 TOTAL
- TIME/DATE: 11:15 AM 6/17/94
COMMENT: FIRST COMPONENT W/ RADIOACTIVE
RAD CONTAM. OF CONCERN 20K cpm
SAMPLES IN BOTTLES
BOTTLES LABELED
BOTTLES SEALED
ID # APPLIED
PLACED IN COOLER
BUBBLE WRAPPED
ICE USED AS REFRIGERANT
C-O-C COMPLETED
- SAMPLE FORM COMPLETED
MEETS THE REQUIREMENTS (SAMPLE PLAN)

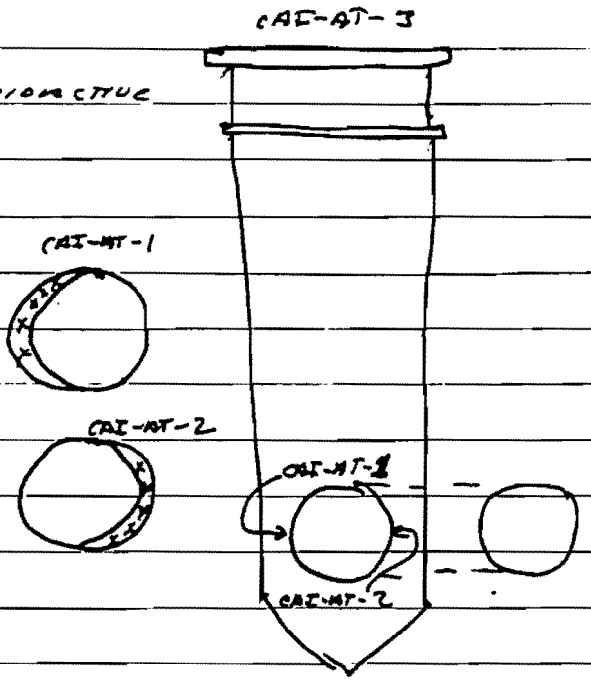

Frank Quinn BEC

COMPONENT SAMPLED: QUENCHING TOWER CAI-QT-1 -2 -3
QUANTITY OF SAMPLES: 3 LOCATIONS X 5 SAMPLES = 15 TOTAL
TIME / DATE: 11:45 / 6/17/94
CAI-QT-3, FIRST SAMPLE INSIDE
INSIDE IS REFRACTORY BRICKS. REMAINING
SAMPLE WILL BE INSIDE FLANGE PIPE
SURFACE. RAD. CONTAM. 10K cpm

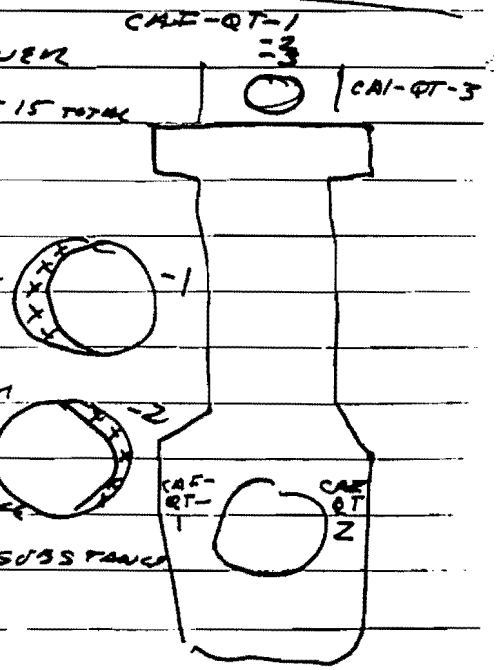

COMMENT: INSIDE SURFACE OF FLANGE
DISCOVERED FIBROUS, NEEDLE-LIKE, SUBSTANCE
SAMPLE FOR ASBESTOS CONTENTS.

COMMENT: WILL MOVE A SET OF 5 SAMPLES FROM RAM GLOVEBOX TO THE RAM ELEVATOR. ALSO WILL PERFORM AN ADDITIONAL 5 SAMPLES AT A FLANGE PRIOR TO HEPA FILTERS.

COMMENT: THE SAMPLE ID #'s ON THE FIELD BLANK SAMPLES CONTAIN LETTERS FB, AND ARE TITLED FIELD BLANK

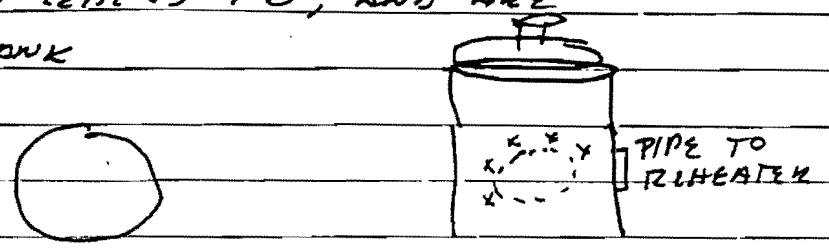

COMMENT: R. CONRAD STATED THAT THE LABELING AND DESIGNATION FOR THE FIELD BLANKS WOULD BE CHANGED TO CAI-HP-5 FOR ALL FIELD BLANKS

- SAMPLES IN BOTTLE
- BOTTLES LABELED
- BOTTLES SEALED
- ID # APPLIED & DOCUMENTED
- PLACED IN COOLER
- BUBBLE WRAPPED
- ICE USED AS REFRIGERANT
- C-O-C COMPLETED
- SAMPLE FORM COMPLETED & MEETS REQ.

Frank - What does this mean? Do these extra 5 samples have CAI-QT code?

COMMENT: ASKED SAMPLER ABOUT SAMPLE FORMS CONTAINING ANALYTICAL LAB'S NAME AND ALSO THE METHOD OF TRANSPORTATION. HE SAID IT WOULD BE ADDED TO THE RECORD.

Frank Chinoja BEC

THERE WAS TWO PHONE NUMBERS

WILL GONZALES (JCR)
104-7414 PC
699-1822 CELLULAR

DAVE MILTEN
- TWO TANKS NEXT TO AC COLUMN ONE WORKS FOR ALL THE BLDG

(6)

★ COMPONENT SAMPLED — SOLID FEED (GLOVE BOX + ELEVATOR)

CAI-SF-1, -2, 3; SF-1 ELEVATOR

DATE/TIME: 6/18/96, 1:00 PM

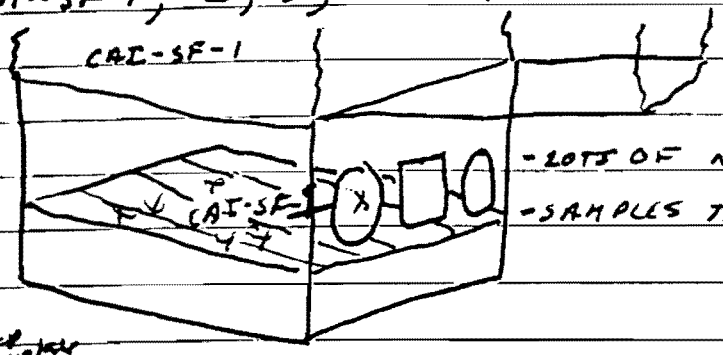

- LOTS OF NOTICEABLE SEDIMENT
- SAMPLES TAKEN LEFT TO RIGHT

- 5% FIELD BLANKS, CN, METALS, SVOCS, VOCS, PCBS } ID # CHANGED TO NOT REFLECT FB OR FIELD BLANK.
(THE PCB FIELD BLANK - PLACED AWAY FROM SVOCS)

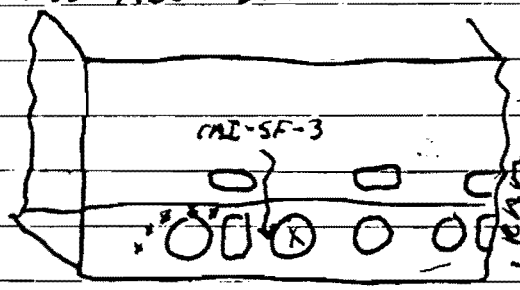

- RAD - 50 CPM
- SAMPLES TAKEN ON FLOOR OF GLOVEBOX IN AN ARC.
- VOCS, SVOCS, METALS, CN, PCBS
- LOTS OF SEDIMENT ON FLOOR OF GLOVEBOX

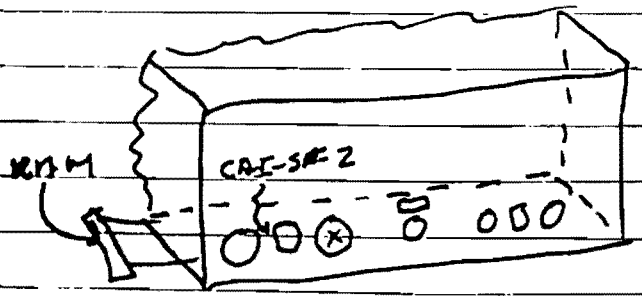

- SAMPLES TAKEN USING SAME METHOD AS ABOVE

COMMENT: ASKED SAMPLING CREW FOR COPIES OF THE SAMPLE FORMS AND C-O-C'S. R. CONRAD STATED COPIES WILL BE MADE FOR ME AFTER HE HAS REVIEWED & APPROVED THEM.

- SAMPLES IN BOTTLE
- BOTTLES LABELED

- BOTTLES SEALED
- ID# APPLIED & DOCUMENTED
- BOTTLES PLACED IN COOLER
- BOTTLES BUBBLE WRAPPED
- ICE USED AS REFRIGERANT
- C-O-C COMPLETED
- SAMPLE FORM COMPLETED & MEETS REQS

Frank Quinoja BEC

COMPONENT SAMPLED - OUTDOORS EXHAUST STACK 8:00 AM / 7-2-96

3 SETS OF 5 SAMPLES; SAMPLING FOR SAME 5 CONSTITS.

(METALS, VOCS, SVOCS, CN, PCBs)

ID #s CAI-EX-1, 2, 3

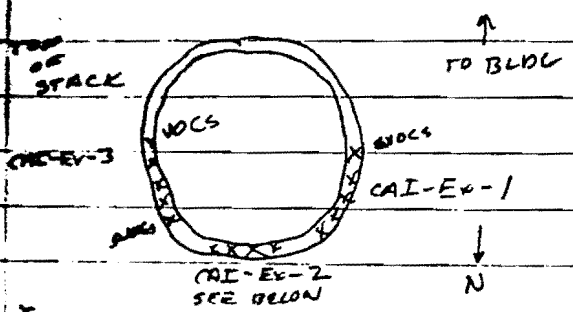

*ALL 3 SAMPLING EVENTS DONE IN CRESCENT SHAPE

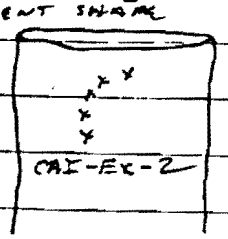

SAMPLING ORDER: VOCs, SVOCs, METALS, CN, PCBs

- IS DOCUMENTED ON ORIGINAL SAMPLE FORMS THAT SAMPLES WERE SHIPPED FED EX.
- SAMPLER (R. CONRAD) STATED THERE WAS SMALL AMOUNTS OF FINE GRAINED SEDIMENT INSIDE STACK; TURNS FILTER PAPER GRAY.

COMMENT: PRIOR TO THIS SAMPLING EVENT, RECEIVED COPIES OF THE SAMPLE FORMS, COCs, AND REQUEST TO ANALYTICAL LAB.

SAMPLES IN BOTTLES
BOTTLES LABELED
BOTTLES SEALED
ID #'S DOCUMENTED
PLACED IN COOLER
USED ICE
C-O-C + SAMPLE FORMS COMPLETED
SAMPLE FORM ENTRIES CONFORM TO REQS

Frank Pinnojia BEC

---

* COMPONENT SAMPLED - LIQUID FEED TANKS 8:45AM/7-2-96

FIELD BLANKS PLACED IN ROOM OUTSIDE FEED TANK ROOM 8:45 AM, ARE 5 FIELD BLANKS FOR EACH CONTAMINANT: VOCS, SVOCS, METALS CN, PCBS
CAI-LF-4

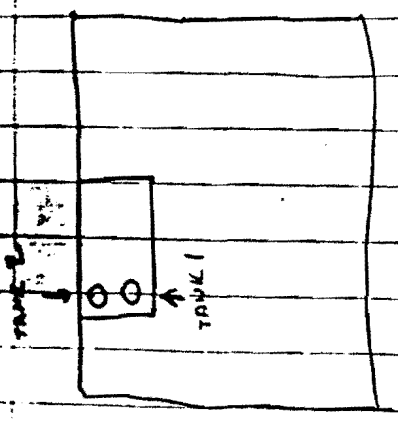

FIRST TANK SAMPLED - TANK 2

COMMENT: TANK INTERIOR LOOKS RELATIVELY CLEAN + UNUSED. SOME DEBRIS ON TANK BOTTOM, APPEARS TO BE METAL CHIPS + PAINT CHIPS.

Check sample #'s

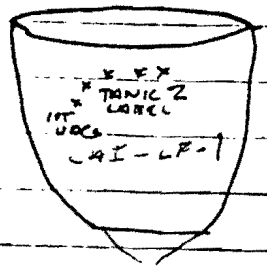

CRI-LF-5 WILL BE DUPLICATE SAMPLE, TAKEN BY TWO SWIPES AT SAME TIME

TANK 1 9:20 AM / 6/2/96

- APPEARS TO HAVE SOME SORT OF WHITISH SEDIMENT ADHERING TO BOTTOM & PARTIALLY UP SIDES OF TANK 1, AN INLET/OUTLET TO THE TANK INSIDE HAS EVEN MORE WHITE SUBSTANCE. THIS SUBSTANCE WILL BE INCLUDED IN SWIPE.

SWIPES FOR TANK 1 WILL BE TAKEN IN THE MANNER BELOW UP SIDE OF TANK

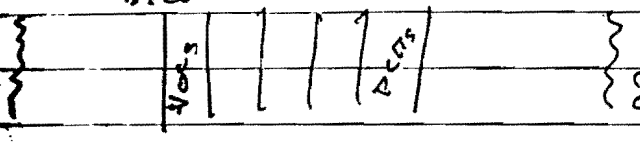

COMMENT: SLIGHTLY YELLOW SEDIMENT ON SWIPES

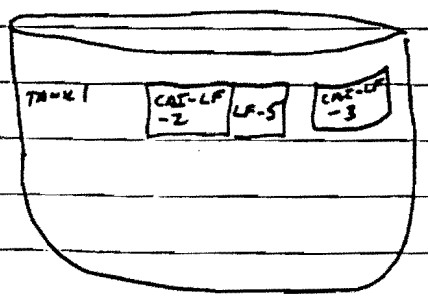

CRI-LF-3 SWIPES TAKEN IN CRESCENT PATTERN

SAMPLES IN BOTTLES

BOTTLES LABELED

BOTTLES SEALED

ID #'S DOCUMENTED

PLACED IN COOLER

USED ICE

C-O-C + SAMPLE FORMS COMPLETED

SAMPLE FORM ENTRIES CONFORM TO REQS

Frank Quinoje BEC

COMPONENT SAMPLED: ELEVATOR (TEST FOR DECON METHOD) CAI-SF-5
TAKEN IN SAME PLACE AS CAI-SF-1. TO DETERMINE VALIDITY
OF DECONNING WITH "FANTASTIC" SPRAY + WIPES
AFTER CLEANING THE AREA WAS RESWIPED.

1st Reference to above

2 SWIPES USED FOR ANALYSIS OF METALS + VOCS

SAMPLES IN BOTTLES	PLACED IN COOLER
BOTTLES LABELED	USED ICE
BOTTLES SEALED	C-O-C + SAMPLE FORMS COMPLETED
ID #'S DOCUMENTED	SAMPLE FORM ENTRIES CONFORM TO REQS

Frank Quinziger BEC

8/8/96 8:15 AM CAI SAMPLING

SAME SAMPLING TEAM: ROW CONKOLD, KALLIE FIRESTONE, AL DYE

COMPONENT SAMPLED: SCRUBBER TANK — TRIP BLANK: H_2O, NO PRES

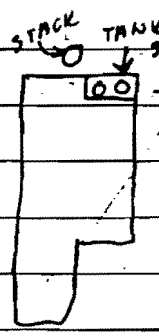

1 SAMPLE: LIQUID — FIELD BLANK: SWIPE

CAI-ST-1 SAMPLE # — TANK # SAMPLED: BC 7C6114

(3) 40 mL VOCs
500 mL METALS
(3) 1000 mL SVOCs
125 mL CN
1000 mL PCBs

PARAGON LABORATORY REQUESTED

TAKING 1 SAMPLE FROM 1 TANK

PRESERVATIVE USED NAOH FOR CN

SAMPLES IN BOTTLES	ID #'S DOCUMENTED	COC + SAMPLE FORMS COMPLETED
BOTTLES LABELED	PLACED IN COOLER	SAMPLE FORM ENTRIES CONFORM TO REQS
BOTTLES SEALED	ICE USED	

Frank Quinziger BEC

COMPONENT SAMPLED: EXTERIOR OF ELEVATOR

DATE: 8/8/96 TIME: 8:55 AM (CAI-SF-6)

SAMPLED FOR VOCs

COMMENT: DUE TO CONTINUED ANALYTICAL DATA FINDING XYLENE IN CAI-SF SAMPLES, THE EXTERIOR OF THE SF ELEVATOR WAS SAMPLED DUE TO EXIBITING A DIFFERENT TYPE OF PAINT.

PROCEDURE: AREA TO BE SAMPLED CLEANED W/ FANTASTIC®

2) WIPED W/ DI H_2O

3) WIPED W/ RAG TO DRY

4) AREA SWIPED

SAMPLES IN BOTTLES

BOTTLES LABELED

BOTTLES SEALED

ID #'s DOCUMENTED

PLACED IN COOLER

ICE USED

COC + SAMPLE FORMS COMPLETED

SAMPLE FROM ENTRIES CONFORM TO REQS

Frank Quinoja BEC

8/23/96 8:30 AM SAMPLE ID [illegible]FR-1

RON CONRAD, FRANK PRIMOZIC PRESENT FOR SAMPLING

COMPONENT SAMPLED: COMBUSTION CHAMBER REFRACTORY BRICK

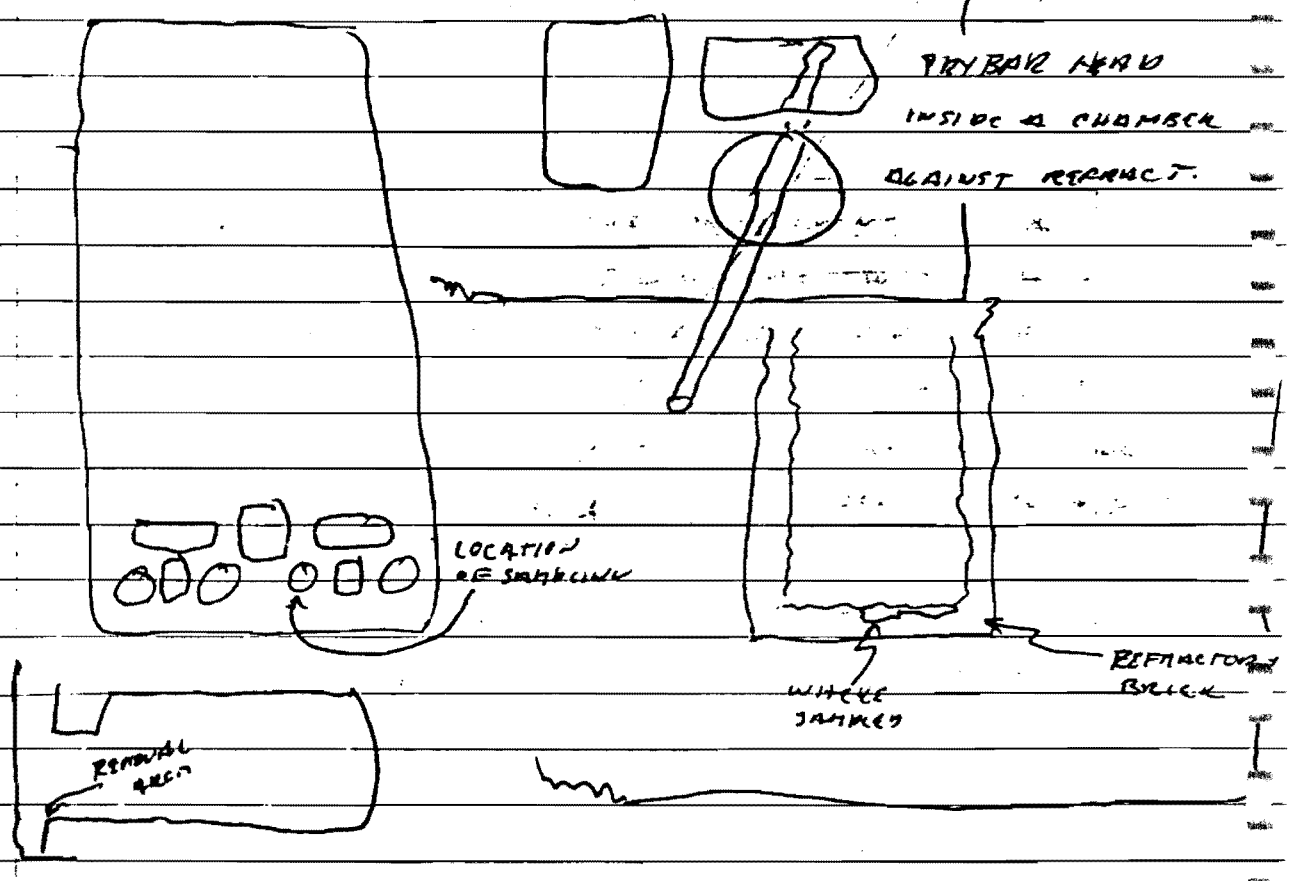

COMMENT: SLEDGE HAMMER USED TO STRIKE PRYBAR DISLODGING BRICK PIECES. GLOVE BOX GLOVE REMOVED W/ A SET OF SMALL STAINLESS TONGS

100 g OF MATRIX REQUIRED FOR TCLP ANALYSES

SCAN DONE PRIOR TO SAMPLING OBTAINED ~50,000 CPMC

IT IS PLANNED TO CRUSH THE BRICK INTO PARTICLES PRIOR TO SENDING TO THE LAB

COMMENT: NO BLANKS WERE EMPLOYED DUE TO THE SAMPLES BEING PLACED INTO THE SAMPLE BAG AT A GLOVE PORT. THE SAMPLE MATERIAL WILL ALSO BE EXPOSED TO AIR WITHIN ANOTHER LOCATION (NEGATIVE AIR) FOR CRUSHING.

CRUSHING

METHOD CHOSEN: USING THE CONTAINMENT OF THE COMBUSTION CHAMBER, ~~A PLASTIC TRAY WAS PLACED INSIDE. A CLEANEY METAL SURFACE PLATE WAS PLACED INTO THE TRAY. THE SAMPLES WERE RE-MOVED FROM THE POLY BAG,~~ STAINLESS STEEL BOWL & HAMMER (FROM COMBUSTION CHAMBER) USED TO CRUSH SAMPLE *

— ACTUAL SAMPLING TIME: 1020 AM

* MATERIAL TO 1-2 MM SIZE. A STAINLESS SCOOP WAS USED TO PLACE SAMPLE MATERIAL INTO CONTAINERS.

COMMENT: R. CONRAD STATED THIS SAMPLE WOULD BE ANALYZED FOR SEMI-VOAC, METALS, CN, PCBS. VOAS WILL BE POINTLESS SINCE THE ROCK NEEDED TO BE CRUSHED FOR ANALYSES. PACKARD MIGHT NOT BE USED FOR THIS ANALYSIS, MAY USE INTERNAL LAB ANALYTICAL SERVICES

SAMPLES IN BOTTLES	ID #'S DOCUMENTED	SAMPLE FORM COMPLETED
BOTTLES LABELLED	PLACED IN COOLER	SAMPLE FORM ENTRIES DONE
BOTTLES SEALED	ICE USED	COC'S ~~[illegible]~~ FILLED OUT

Frank Ominojie BE

4/6/96 COMMENCMENT SAMPLEN: ASH PIT

SAMPLER, LABELLER, PREMARKER: RON CONRAD (ESH-19)

WILL GONZALEZ (JCI) HELPING R. CONRAD, F. PRIMOTICO

USING FIELD ~~SAMPLE~~ BLANKS – 5 UNITS (CAI-AR-5)

METALS, VOAs, SVOAs, CN, PCBs TAKEN SAME ORDER

VOCs, SVOCs, METALS, CN, PCBs ← MOVING CIRCLE

SAMPLE ID # – CAI-AR-1 TIME: 8:15 AM

5 SAMPLES FOR EACH ID # (TAKEN ON ~~BOTTOM~~ TO BOTTOM OF CONT

RAD COUNTS PRIOR TO SAMPLING (ON ASH PIT)

10,000 CPM

SAMPLES TAKEN INSIDE HOLE

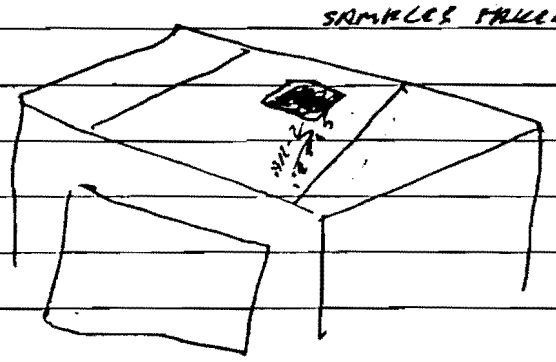

SEE PICTURE (PHOTOGRAPH #

SAMPLE ID # – CAI-AR-2 (SEE PICTURE)

TIME: 8:25 AM

COMMENT: AR-2 WAS TAKEN INSIDE BUT ON TOP SURFACE APPEARED TO BE TAKEN IN DIAGONAL LINE, 1ST SAMPLE EARTH

SAME ORDER AS ABOVE: VOCs, SVOCs, METALS, CN, PCB

5 SAMPLES TAKEN

SAMPLE ID# - CAI-AR-3 - TIME 8:35 AM

5 SAMPLES TO BE TAKEN

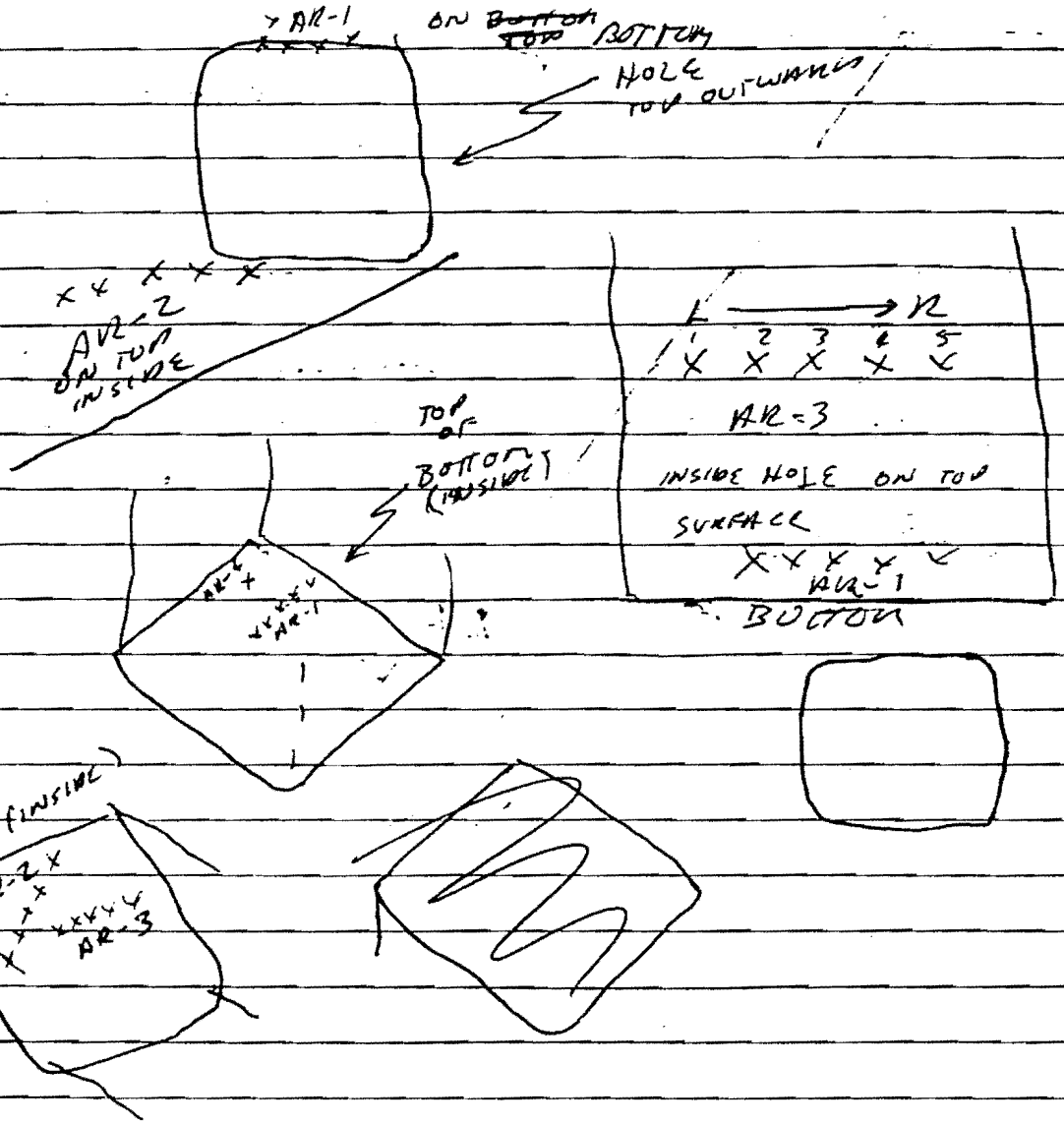

CAI-AR-4 - DUPLICATE OF AR-1 TIME 8:45 AM

1 SAMPLE

(116)

COMMENT: R. CONRAN CHANGED GLOVES AFTER OBTAINING EACH SET OF SAMPLES

SAMPLES IN BOTTLES — Frank Primozic BEC 8/8/96

BOTTLES LABELLED

BOTTLES SEALED

ID #'S DOCUMENTED

SAMPLES PLACED IN COOLER

ICE USED

SAMPLE FORM COMPLETED

SAMPLE FORM ENTRIES CONFORM TO REQUIREMENTS

COC'S COMPLETED

Frank Primozic BEC

9/10/96 1:30 PM

COMPONENT SAMPLED: REFRACTORY BRICK

CAI-FR-1A (R. CONRAD CHANGED HIS PAPERWORK FROM "RF" TO "FR")

COMMENT: THIS COMPONENT IS BEING RESAMPLED TO ALLOW VOC LAB ANALYSIS TO BE PERFORMED A PIECE OF BRICK PREVIOUSLY REMOVED (LAST BRICK SAMPLING EVENT)

SAMPLE IN BOTTLE

BOTTLE LABELED

BOTTLE SEALED

ID #'S DOCUMENTED

SAMPLE PLACED IN COOLER

ICE USED

SAMPLE FORM COMPLETED

SAMPLE FORM ENTRIES CONFORM TO REQUIREMENTS

COC'S COMPLETED

Frank Ruggiero BEC

5-9442

OBSERVATION OF CAI COMPONENT DECON PROCESS

COMPONENT WASHED: CARBON ABSORBER, 2:20 PM, 9/12/96

BACKGROUND SAMPLE: CAI-AC-4

RINSATE SAMPLE: CAI-AC-5

MARCUS TRIALS - ESH-19 REPLACEMENT FOR R. CONRAD TO PERFORM SAMPLING.

COMMENT: THE CARBON ABSORBER WAS DECONNED WITHOUT INDEPENDENT OVERSIGHT. THE COLLECTION OF THE TWO SAMPLES OCCURRED IN THE HIGH BAY AREA OF THE BUILDING. THIS ACTION WAS OBSERVED BY THE INDEPENDENT BODY

SAMPLES WERE PLACED IN BOTTLES

BOTTLES LABELED

SEALED

ID#'S DOCUMENTED

SAMPLES PLACED IN COOLER

ICE USED

SAMPLE FORM COMPLETED

SAMPLE FORM ENTRIES CONFORM TO REQUIREMENTS

COC'S COMPLETED

Frank Chinoja

9-18-96

Decontamination of quench tank

- Performed in the containment area under negative air pressure

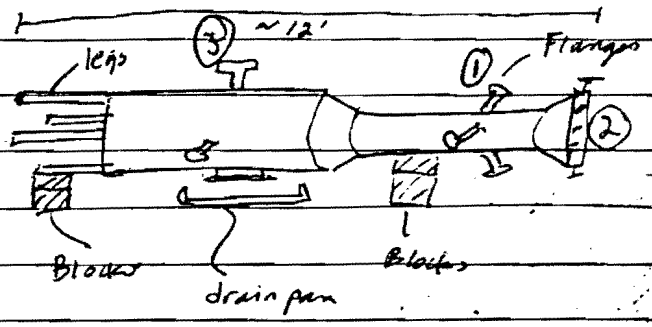

The plan is to inject steam into flanges; let it drain; rinse tank with water spray. Tank is all stainless steel. Observed tank prior to decon. All ports sealed with duct tape and plastic. Discussed procedures with laborers and they described how the plan to move the steam cleaner nozzle to different ports to ensure thorough cleaning.

Injected into port ①. Some steam escaping through leaks most steam contained. Water dripping into drain pan. Laborer rotating steam wand back and forth; Moved to flange ②. Continued steam cleaning; Moved to port ③. Stopped after port ③. Spent about 20 minutes injecting steam into tank. Filled sample bottle with steam water for blank. RCT held bottle and cap; laborer held steam wand. They filled 3 bottles, one plastic bottle for metals and 2 VOA glass jars. The drain pan was pumped out. Bottles passed out to Ron Conrad for labeling/handling

Second rinse was started through port ②, ①, ③. Lasted about 10 minutes.

— more —

9-18-96

Decon of Quench Tank (cont.)

Dominic Pompeo collected the rinsate samples from the flange draining into the drain pan. Couldn't tell if he was able to get a clear catch of liquid because my vision was obscured. We talked before sampling and he knew that clear catch was needed. He changed gloves before handling the sample bottles. Samples passed out to Ron Conrad for logging / handling.

CA1 ~~22 43m~~	QT 4	(Pre wash: VOC, semi VOAs, metals)
CA1	QT 5	(Rinsate: metals)
CA1	QT 6	(Trip Blank: VOCs)
CA1	QT 7	(Field Blank: VOCs)

Above are the samples collected. They will be shipped Paragon Analytics in Ft. Collins this afternoon by Fed Ex. 5 day turnaround time for results.

After containment was cleaned up, I observed into the tank through Port ②. I could see in about 3 feet and all observable metal was free of residual.

Jeffrey Miller, CIH

7-3459
TOM CALLER REFRACTORY

9/19/96 1:30 PM

COMPONENT DECONNED: ABSORBER TOWER

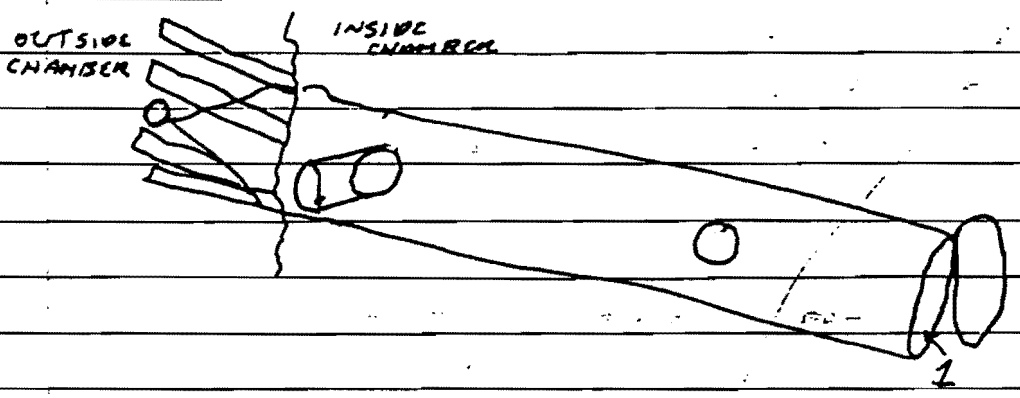

PREWASH SAMPLE TAKEN ~~1:42 PM~~ ASK IF BURNER OPERATING FOR PREWASH SAMPLE. STRIKER MECHANISM BROKEN.

COMMENT: OPERATIONS EXPERIENCED DIFFICULTY GETTING THE STEAM BURNER TO LIGHT

COMMENT: OPERATIONS CANCELLED DUE TO STEAMER MALFUNCTION.

NA

FJP 9/23/96

COMPONENT DECONNED: SOCLW ~~WASTE~~ FEED ~~ELEVATOR~~ GLOVEBOX

DATE: 9/23/96 TIME:

COMMENT: THIS COMPONENT IS BEING DECONNED OUTSIDE OF THE DECON CHAMBER. THIS IS DUE TO THE FACT THAT THE STEAM CAN BE CONTAINED WITHIN THE ELEVATOR.

ALBERT DUE (ESH-19) STANDING IN FOR R. CONRAD TO HANDLE SAMPLING.

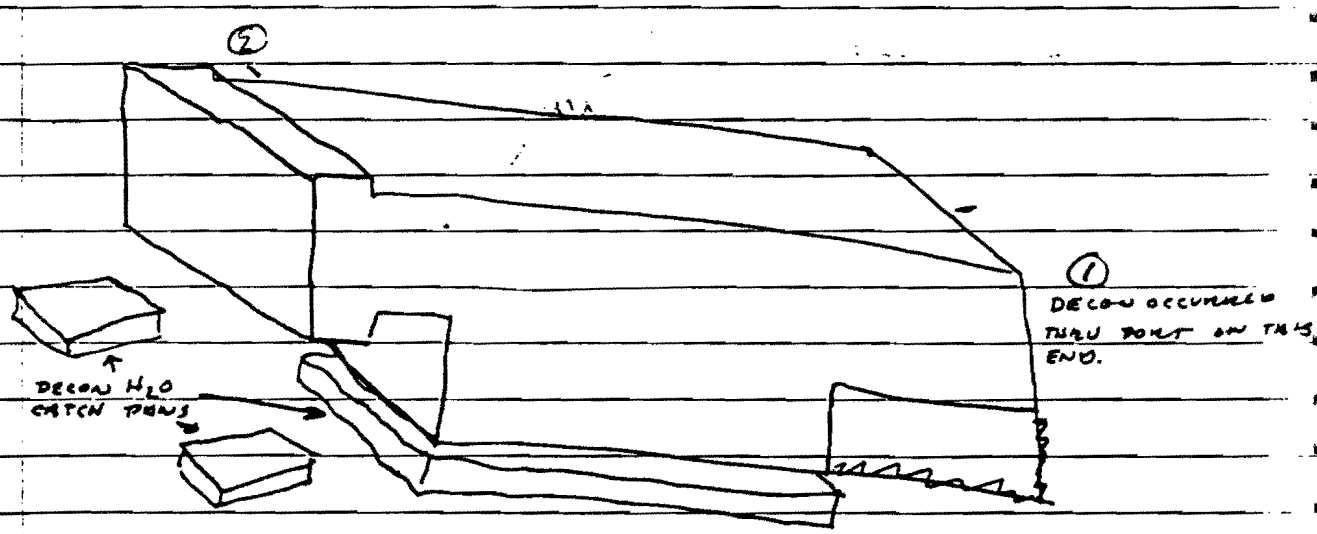

COMMENT: WASH WATER OBSERVED DRAINING FROM THE COMPONENT WAS A VERY DARK BROWN OR BLACK.

FINISHED WASHING ~ 11:38 AM

FJP 9/24/96

SAMPLE ID #s: CAI-SF-~~6~~8 FOR VOAs, SVOAs, METALS

-~~7~~9 DUPLICATE OF METALS ONLY

NO SAMPLE CONTAINERS FOR DUP. VOAs & SVOAs

FIELD BLANK : CAI-AT-7 USED FOR THIS SAMPLING

TRIP BLANK " CAI-AT-6 USED FOR THIS SAMPLING

SAMPLES IN BOTTLES

BOTTLES LABELED

SEALED

SAMPLE FORMS COMPLETED

SAMPLE FORM ENTRIES COMPLY WITH REQUIREMENTS

ID #'s DOCUMENTED

COC COMPLETED

SAMPLES PUT IN COOLER

ICE USED

Frank Pinnegar DEC

ALBERT DYE
7-4715 2:00-2:30

(29)

COMPONENT DECONNED: ABSORBER COLUMN

DATE: 9/23/96 TIME: 12:20 PM

JCI PERFORMED ACTUAL DECON ACTIVITIES

A. DYE (ESH-19) REPLACED R. CONRAD FOR SAMPLING

DOMINIC POMPEO (RCT) PRESENT. (HEIGHT)

COMMENT: DECONNED AT TOP W/ CATCH PAN.

H_2O ENTERED THRU SIDE PORT

COMMENT: WASH H_2O LOOKED CLEAN + CLEAR

FINISHED WASH 12:25 PM.

TOOK BACKGROUND SAMPLE THRU ALL STEAM CLEANER

COMPONENTS + HOSES. TIME: 12:40 PM

SAMPLES ID #s - CAI-AT-4 BACKGROUND

- CAI-AT-5 RINSATE 12:20

~~A~~ FJP 9/23/96

COMMENT: DECONNING PERFORMED IN THE DECON CHAMBER

SAMPLES PLACED IN BOTTLES

BOTTLES LABELED

BOTTLES SEALED

ID #'s DOCUMENTED

SAMPLES PLACED IN COOLER

SAMPLE FORM COMPLETED

SAMPLE FORM ENTRIES CONFORM TO REQUIREMENTS

COC'S COMPLETED

Frank Pinnegar DRC

DATE: 09/25/96 TIME: 10:10 AM

COMPONENT DECONNED: ~~SOLID FEED GLOVEBOX~~ RAM UNIT

JCI PERSONNEL PERFORMING ACTUAL DECON.

COMMENT: THIS COMPONENT IS BEING DECONNED EXTERNAL TO THE DECON CHAMBER, BUT STILL IN THE CAI ROOM. THE GLOVEBOX IS CONNECTED TO A PUMP SUPPLYING NEGATIVE PRESSURE INTERNALLY TO THE GLOVE BOX.

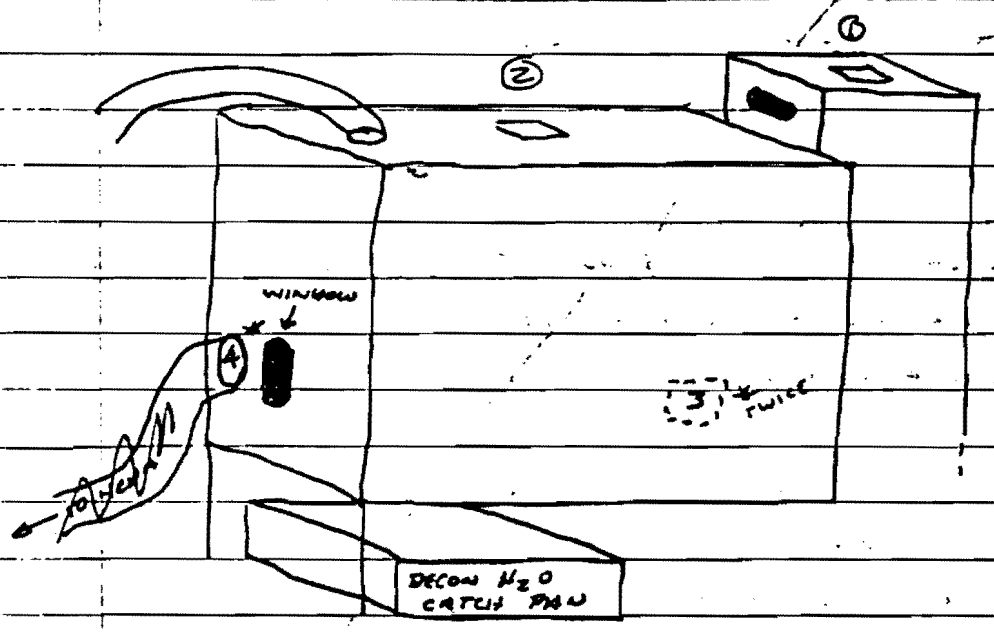

COMMENT: AFTER TESTING THE CONTAINMENT OF WATER WITHIN THE RAM, IT WAS FOUND THERE WERE TOO MANY LEAKS. CORRECTIVE ACTION IMPLEMENTED WAS TO PLACE LEGS OF THE RAM INTO THE CATCH PAN. SEE BELOW.

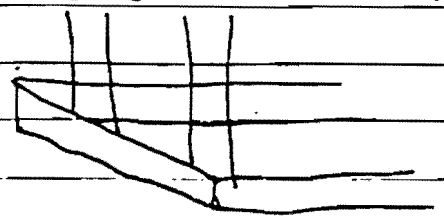

COMMENT: EXPLAINED TO PERSONNEL, THE RAGS USED TO CLEAN THE LEAKS OF WATER OBSERVED PREVIOUSLY WOULD HAVE TO BE MANAGED AS MIXED WASTE. ALSO THE HEPA FILTERS WILL HAVE TO BE TREATED AS MIXED WASTE. SAFANCE PPE ALSO

COMMENT: THE WASH H_2O VERY DIRTY IN FIRST STAGES OF CLEANING (DARK BROWN — BLACK): H_2O BECAME INCREASINGLY CLEAR THROUGHOUT WASHING

- WASHING STARTED ~ 10:10 AM

- R. CONRAD (ESH-19) PRESENT FOR SAMPLING.
- DECONNING WAS OBSERVED FROM SECOND STORY WINDOW & PROVIDED GOOD VIEWING ACCESS

- RINSATE CAI-SF-10 (VOCS & METALS)
- FIELD BLANK SPILLED DURING OPERATIONS → CAI-SF-12
- TRIP BLANK WAS THEN OPENED & USED AS FIELD BLANK
- NO CAI-SF-11
- SAMPLING TIME: 11:00 AM

COMMENT: SAMPLES SHOWED SIGNS OF DISCOLORATION.

SAMPLES PLACED IN BOTTLES
BOTTLES SEALED
BOTTLES LABELED
ID #'S DOCUMENTED
SAMPLES PLACED IN COOLER
SAMPLE FORM COMPLETED

SAMPLE FORM ENTRIES CONFORM TO REQ'S.
COC'S COMPLETED

Frank Ponizzi BEC

9/27/94 TIME: 9:00 AM

COMPONENTS DECONNED: DUCT WORK, 2 PIECES WITH ELBOWS REFERRED TO AS DE & FG AND A STRAIGHT PIECE REFERRED TO AS H. (SEE DRAWING ~~DECON~~ PG. 31) FP 9/27/94

COMMENT: DE & FG ARE ~ 10 FT LONG WITH ~ 1 FT DIAMETER. H IS ~ 13 FT LONG WITH 1 FT DIAMETER.

ALL THREE PIECES WILL BE DECONNED TOGETHER AND THE RINSATE WILL BE COMBINED. STEAM WAS APPLIED AT THE ENDS OPPOSITE THE ELBOWS.

FG WAS DECONNED FIRST AND RINSATE SAMPLE CAI-FG-1 WAS TAKEN AT 9:06 AM. IT WILL BE ANALYZED FOR METALS. 250 ML POLY BOTTLES USED WITH HNO_3 USED AS A PRESERVATIVE

DE DECONNED NEXT WITH SAMPLE CAI-DE-1 TAKEN AT 9:10 WITH SAMPLING OPERATION THE SAME AS FOR FG.

H WAS DECONNED NEXT USING SIMILAR OPERATIONS IN THE OTHER TWO PIECES OF DUCT WORK.

THIS DECONNING WAS PERFORMED OUTSIDE THE ENCLOSURE

D. POMPEO (LANL) PERFORMED SAMPLING UNDER DIRECTION OF R. CONRAD (ESH-19)

9/27/96 TIME: 9:35 AM

COMPONENT DECONNED: VENTURI SCRUBBER (VENTURI ATTACHED TO QUENCH COLUMN)

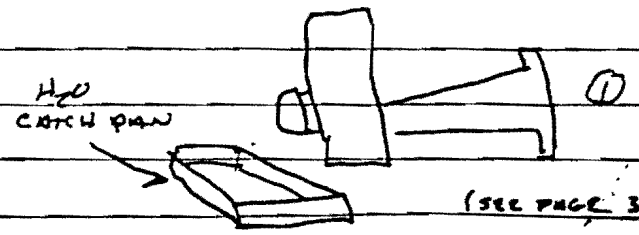

(SEE PAGE 32)

THE DECONNING STARTED AT THE PORT MARKED 1. THE EFFLUENT EXITED THRU 2 PORT. STEAMED FOR APPROXIMATELY 10 MINUTES + THEN TOOK SAMPLE CAI-VNT-1 AT 9:45 AM

PRIOR TO THE DECONNING, R. CONRAD TOOK THREE MORE BACKGROUND SAMPLES FROM THE STEAMER. THIS INCREASES THE TOTAL BACKGROUND SAMPLES TO FIVE. EVEN THOUGH THE CLOSURE PLAN ONLY REQUIRES TWO BACKGROUND SAMPLES, IT IS HOPED THAT THE AVERAGE OF THE FIVE WILL INCREASE THE LIMITS THE BACKGROUND IMPOSES ON THE RINSATE SAMPLES FROM DECON. THE SAMPLE ID #'S ARE:

CAI-DW-1

CAI-DW-2

CAI-DW-3

THE FOLLOWING APPLIES TO ALL SAMPLES COLLECTED ON 9/27/96:

SAMPLES PLACED IN POLY BOTTLES

BOTTLES LABELED

BOTTLES SEALED

HNO_3 USED FOR PRESERVATIVE

SAMPLE FORM COMPLETED

ENTRIES FOLLOW REQUIREMENTS

COC COMPLETED

Frank Quinzio BCC

FP 1 Nov 96 (32) (30)

09/27/96 TIME 1:15 PM

COMPONENT SAMPLED: DUCT WORK (AFTER OVEN, BEFORE QUENCH TOWER) REFRACTORY

USED HAMMER TO PULVERIZE REFRACTORY IN PLACE

FILLED SAMPLE CONTAINER (40 ML) 9/27/96

FINISHED SAMPLING 1:30 PM CAI-QT-7/10

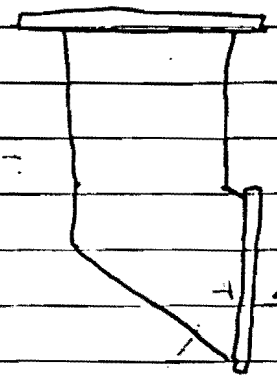

THIS DUCT IS REFERENCED AS #1 ON THE DRAWING (PAGE 33)

SAMPLE SCANNED FOR RAD - GROSS ALPHA 1318 pCi/g

NEGLIGIBLE BETA

WILL UNDERGO TCLP FOR METALS

SAMPLE BOTTLED

SEALED

LABELED

SAMPLE FORM COMPLETED

SAMPLE FORM ENTRIES IN COMPLIANCE WITH REQUIREMENTS

COC COMPLETED

Frank Quinzio REC

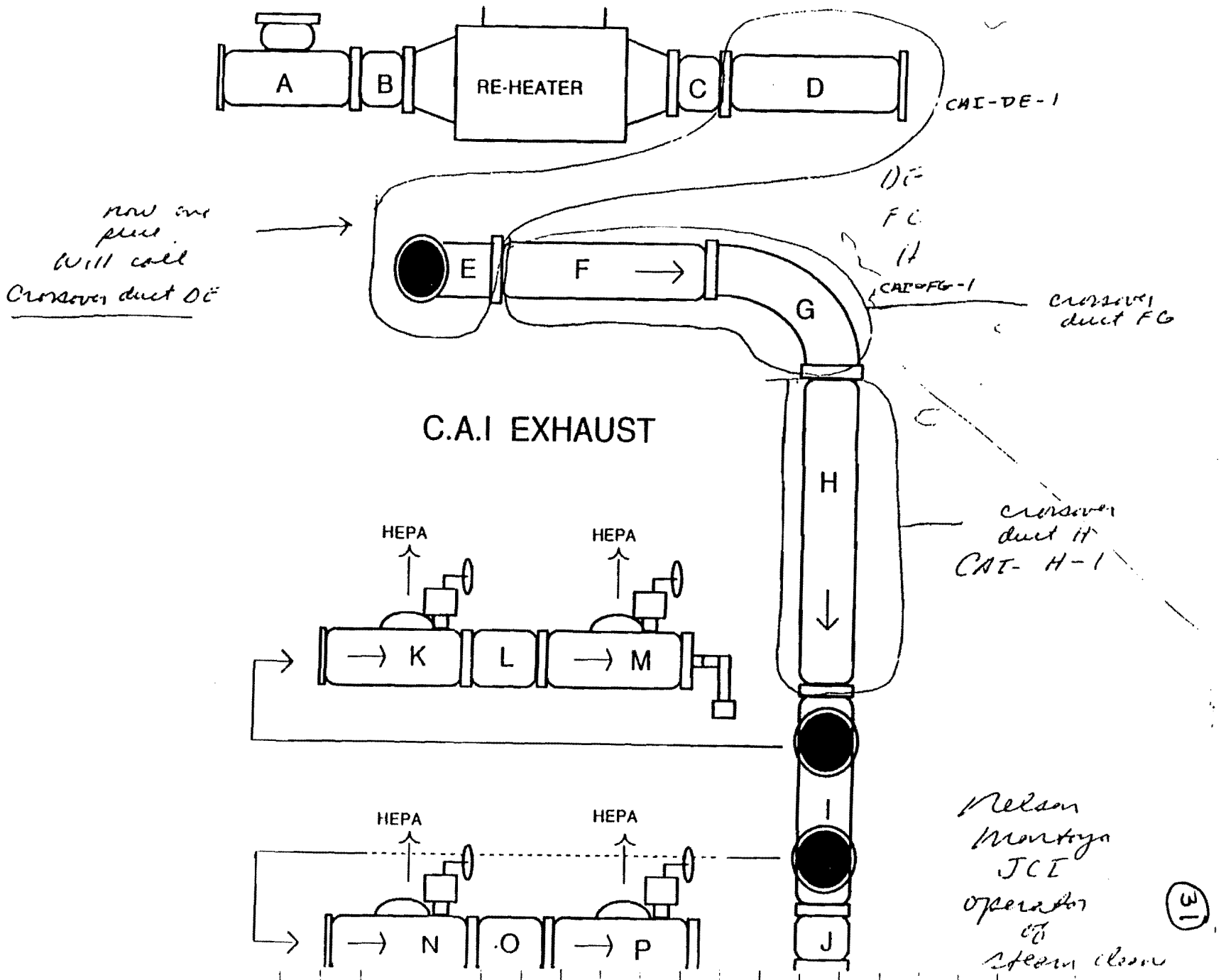
A
B
RE-HEATER
C
D
CAI-DE-1
now one piece
Will call
Crossover duct DE
E
F
G
CAI-FG-1
crossover duct FG
C.A.I EXHAUST
H
crossover duct H
CAI- H-1
HEPA
HEPA
K
L
M
HEPA
HEPA
N
O
P
I
J
Nelson
Montoya
JCI
operator
of
steam cleaner
3

TA-50
Controlled Air Incinerator
D+D
Decomming of
Components

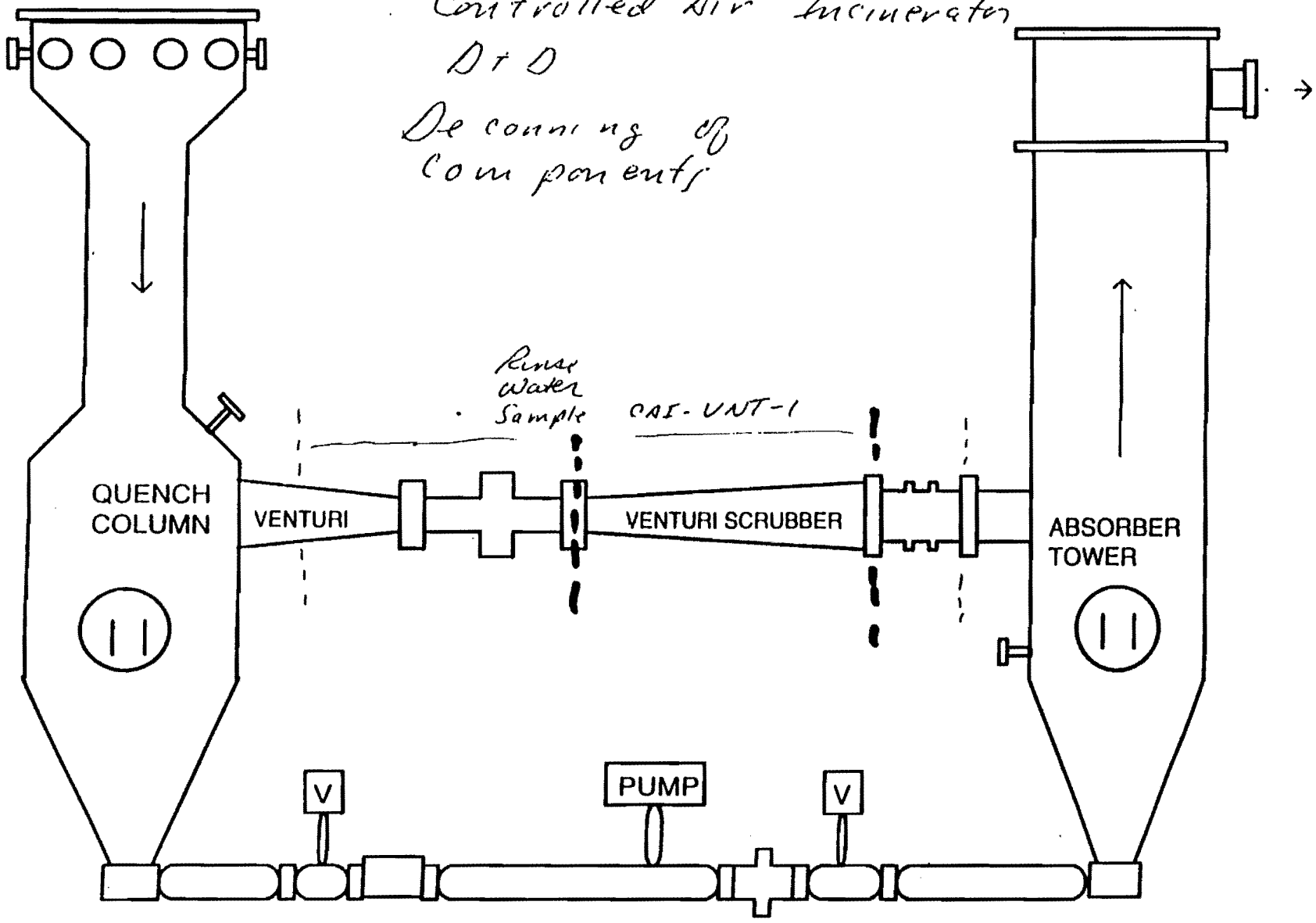

CROSSOVER DUCT

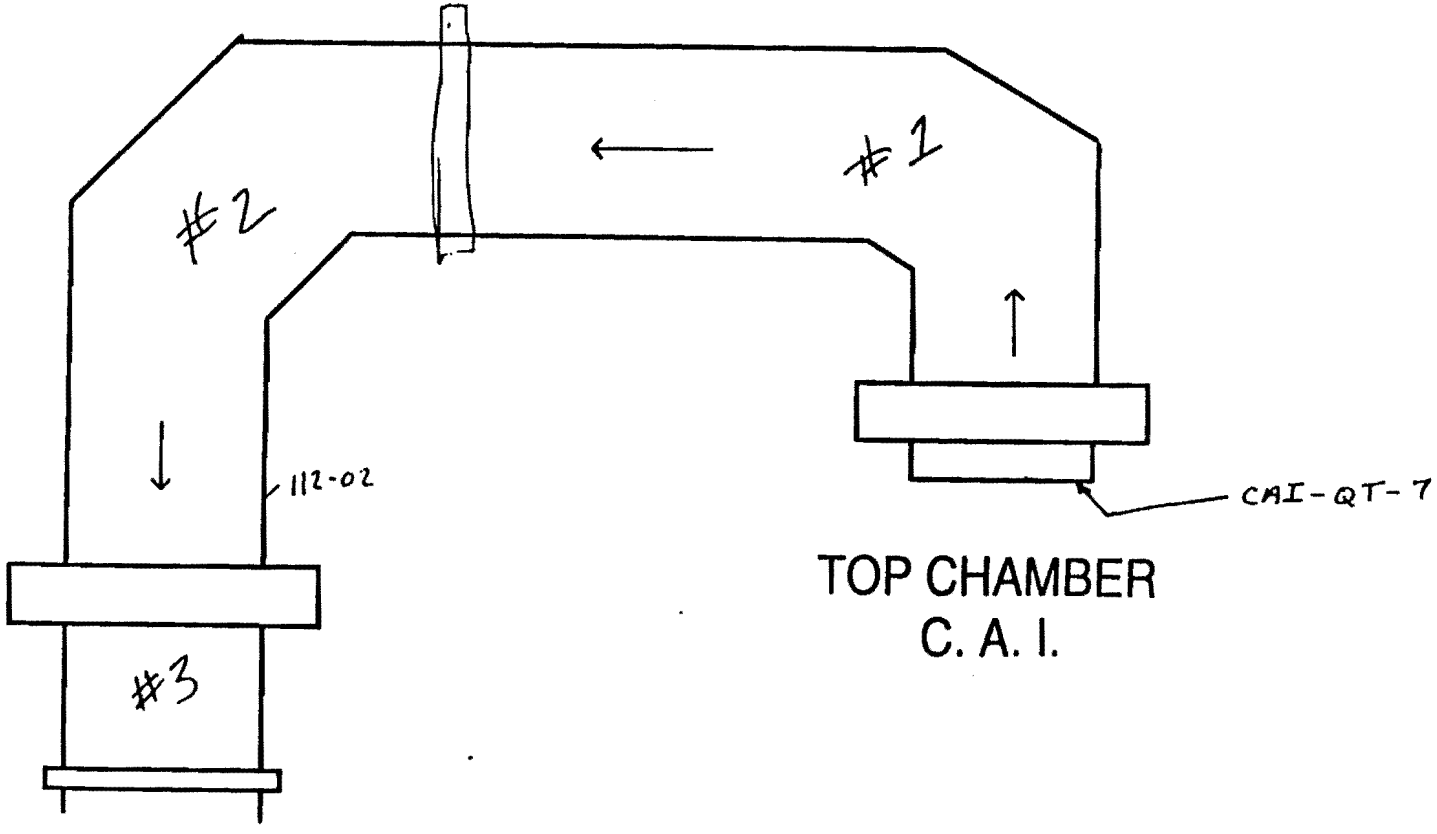

TOP CHAMBER
C. A. I.

9/30/96 TIME: 2:30 PM

COMPONENT DECONNED: 2 VALVES FROM THE ASH HOPPER.

COMMENT: THE RISATE SAMPLE IS PLANNED TO BE ~~COMPOSITE OF BOTH VALVES~~ TAKEN FROM THE SINGLE VALVE AS WORST CASE DUE TO QUANTITY OF ASH.

SINGLE VALVE MECHANISM

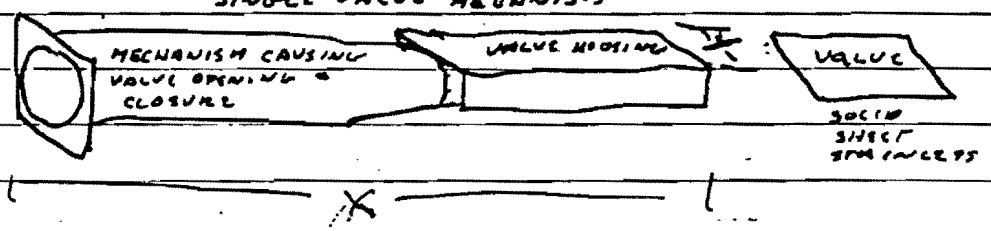

DOUBLE VALVE MECHANISM

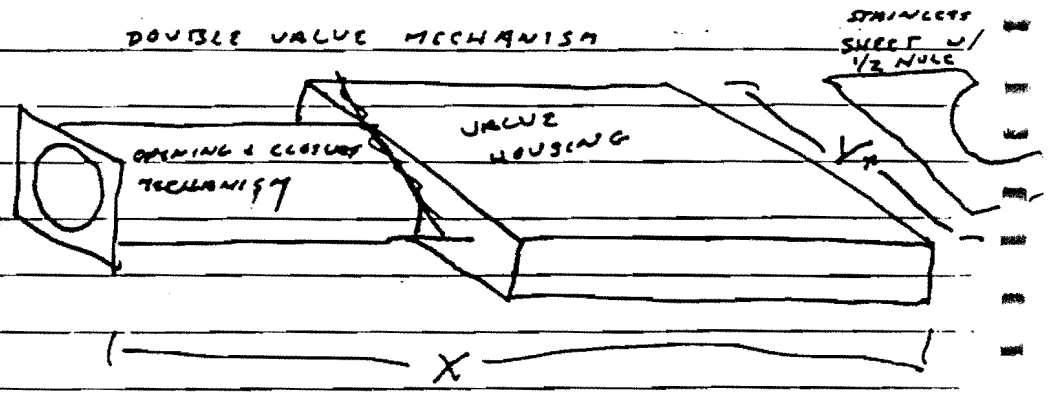

COMMENT: THE OTHER HALF OF THE DOUBLE VALVE MECHANISM REMAINS IN THE ASH HOPPER ASSEMBLY, TO BE DECONNED WITH THE HOPPER

COMMENT: INTERNAL TO THE BOX ENDS OF THE VALVES HAVE STAINLESS STEEL SHEETS WITH LOOSE ASH

RINSATE SAMPLE: CAI-AR-10 THE REPACS ONLY TIME: 14:38, 250 ml

SAMPLE IN 250 ml POLY BOTTLE
BOTTLE SEALED
BOTTLE LABELED

SAMPLE FORM COMPLETED
SAMPLE FORM ENTRIES CONFORM TO RECORD
COC COMPLETED

COMMENT: THIS DECON PROCESS CONSISTED OF PULLING THE STAINLESS SHEETS OUT OF THE HOUSINGS + THEN FLUSHING WITH HOT H_2O + THEN STEAMING OF THE VALVE HOUSING & VALVE.

COMMENT: IN LOOKING AT THE PHOTO OF THE COMBUSTION CHAMBER, THE OUTLET PROTRUDING TOWARD THE FORE-GROUND OF THE PICTURE HAS THREE PROTUBERANCES, TWO ON THE RIGHT SIDE, ONE ON THE LEFT. THE FIRST PROTUBERANCE WAS LEFT FROM THE SINGLE VALVE, (MARKED ON PHOTO AS #2), AND THE DOUBLE VALVE IS DIRECTLY BEHIND THE SINGLE VALVE, ON BOTH SIDES OF THE PIPE (MARKED AS #1/2) 9/1/86

Frank Quinoja BEC

10/1/96 TIME: 3:40 PM

COMPONENT DECONNED: DUCT WORK ON THE ENTRY SIDE OF THE HEPA BANK. SEE THE DRAWING ON PAGE 31 OF THIS LOGBOOK.

COMMENT: STEAM WAS INTRODUCED AT THREE LOCATIONS FOR THE DECON OPERATION. THESE WERE ON EACH END OF THE HORIZONTAL DUCTS AND ON THE UPPER END OF THE VERTICAL DUCT. SEE DRAWING BELOW.

RINSATE SAMPLE: CAI-HP-10 TIME: 3:55 PM

WILL BE ANALYZED FOR TAL METALS PRESERVATIVE: HNO_3

SAMPLE BOTTLE: 250 mL POLY BOTTLE

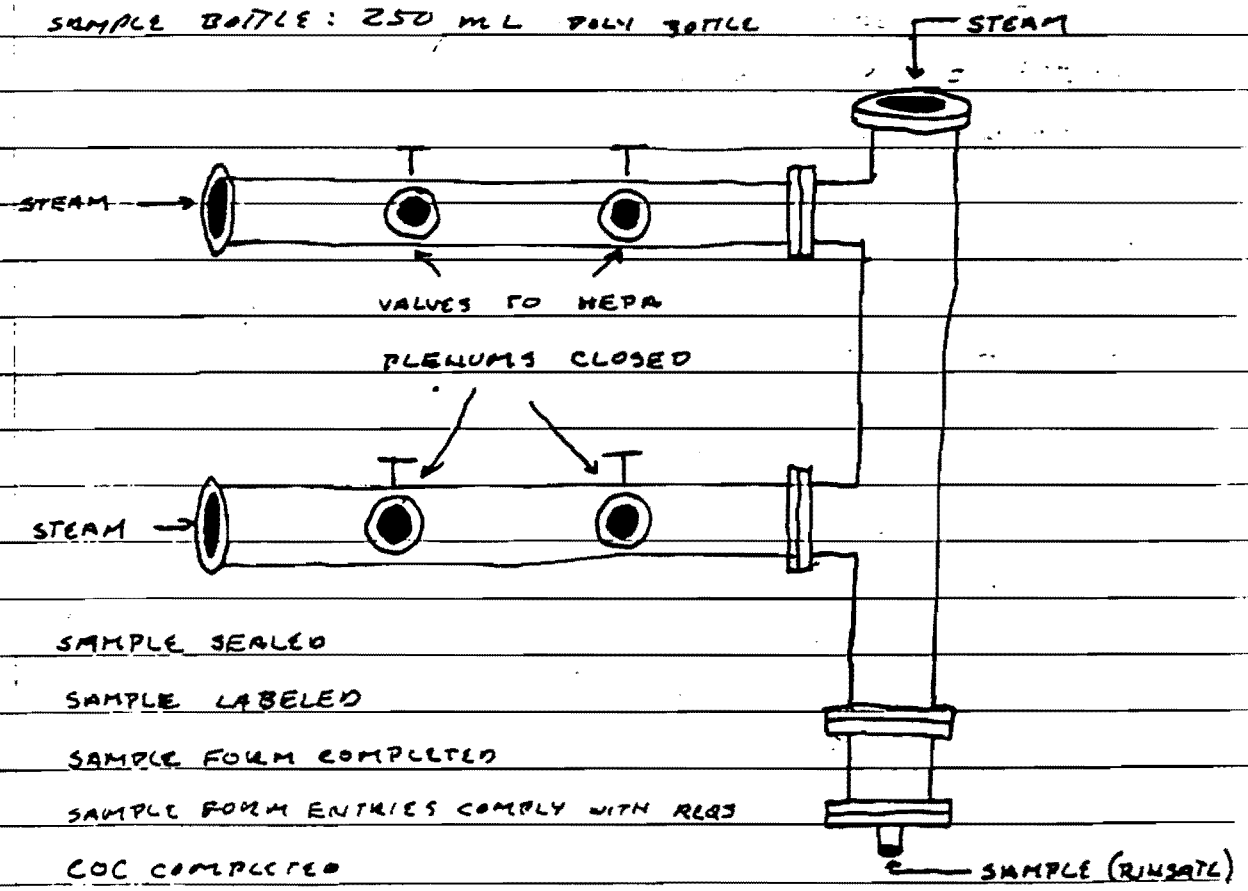

SAMPLE SEALED

SAMPLE LABELED

SAMPLE FORM COMPLETED

SAMPLE FORM ENTRIES COMPLY WITH REQS

COC COMPLETED

Frank Pinnegar BEC

10-2-96 TIME: 10:07 AM

COMPONENT DECONNED: HEPA FILTER HOUSINGS + CROSS-OVER PIPING (SEE DIAGRAM ON PAGE 41 FOR ORDER DECONNED ☐)

COMMENT: THE PROCESS AGREED UPON FOR DECONNING THE FILTER HOUSINGS WAS TO USE ALCONOX INSTEAD OF STEAM TO REDUCE THE CHANCES OF H_2O BECOMING TRAPPED INSIDE THE HEPA BANK. THIS WOULD BE A PROBLEM BECAUSE THE HEPA-BANK IS PLANNED TO BE REUSED. THE ALONOX SOLUTION WAS MIXED PER THE COMPANY DIRECTIONS - 1% SOLUTION OR 2.5 Tbsp/GAL. THE SOLUTION THEN ~~WILL BE~~ WAS PLACED ON CLOTHS AND THESE CLOTHS (WET) WERE USED TO WIPE THE INTERNAL SURFACE AREA OF EACH HOUSING AND CROSS-OVER PIPES. AFTERWARD, CLEAN CLOTHS AND CLEAN WATER WERE USED TO RINSE THE ALCONOX AND REMAINING DEBRIS AND CONTAMINATION FROM THE SURFACES.

COMMENT: THESE CLOTHS WILL BE TREATED AS MIXED WASTE.

COMMENT: RESPIRATORS WERE NECESSARY (PER D. POMPEI RCT) FOR THIS DECON OPERATION IN THE MAIN CAI ROOM, SO MY OBSERVATIONS WERE BASED UPON 2ND FLOOR WINDOW VIEWING AND INTERVIEWS WITH THE OPERATORS

COMMENT: ONE COMBINED SAMPLE WAS TAKEN FROM RINSE

WATER FROM EACH FILTER HOUSING. WATER WAS SPRAYED INTO THE HOUSING AND RAN ALONG THE BOTTOM OF THE HOUSING TO A PORT ON THE BOTTOM.

SAMPLE SEALED

SAMPLE LABELED.

SAMPLE FORM COMPLETED

SAMPLE FORM ENTRIES COMPLY WITH REQS

COC COMPLETED

Frank Ohmoja BEC

10/3/96 TIME: 10:10 AM

COMPONENT DECONNED: EXIT DUCT WORK ON HEPA BANK

COMMENT: IT WAS DECIDED TO STEAM CLEAN THIS DUCT WORK LIKE THE ENTRY DUCT WORK. IT WAS PERFORMED IN THE HIGH-RAD AREA.

COMMENT: THIS DUCT WORK WAS STEAMED THROUGH EACH OF THE HORIZONTAL DUCT OPENINGS AND THE TOP VERTICAL OPENING.

COMMENT: WASH WATER DISCOLORED WITH SMALL DARK PARTICLES.

RINSATE SAMPLE: CAI-NP-14 TIME: 10:32 AM

WILL BE ANALYZED FOR TAL METALS

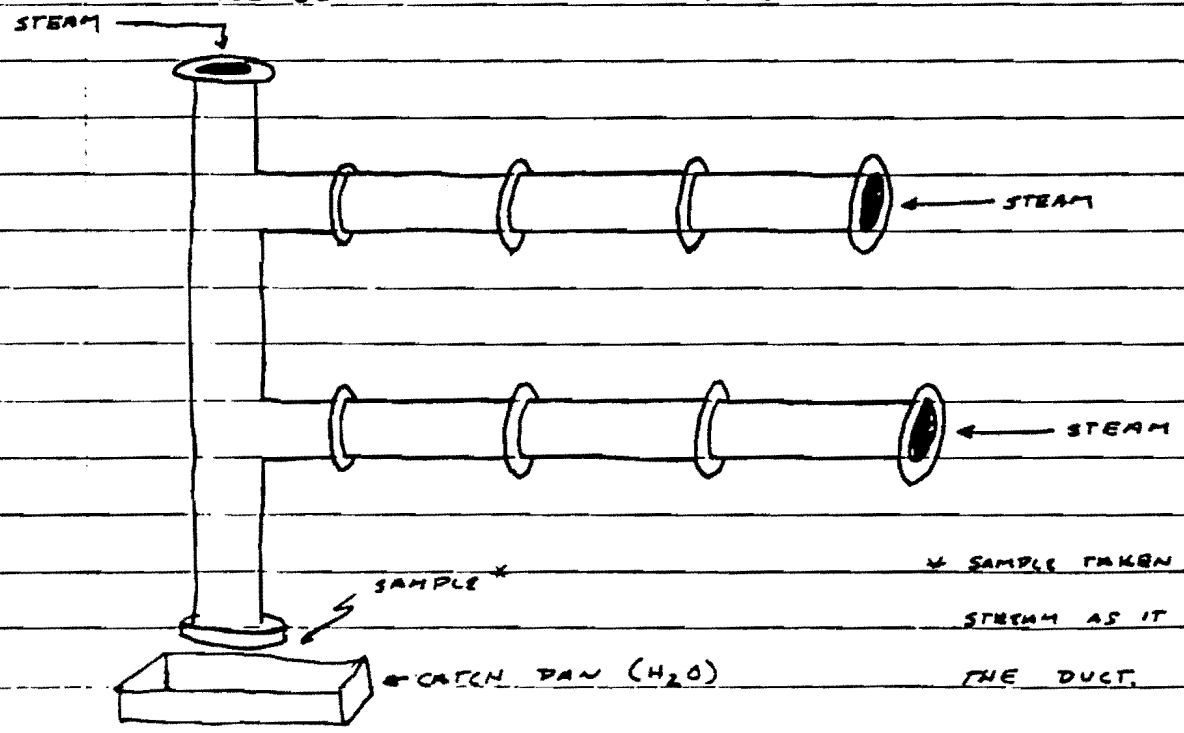

* SAMPLE TAKEN FROM STEAM AS IT EXITED THE DUCT.

SAMPLE SEALED

SAMPLE LABELED

SAMPLE FORM COMPLETED

SAMPLE FORM ENTRIES COMPLY WITH REQS

COC COMPLETED

Frank Quinoyer BEC

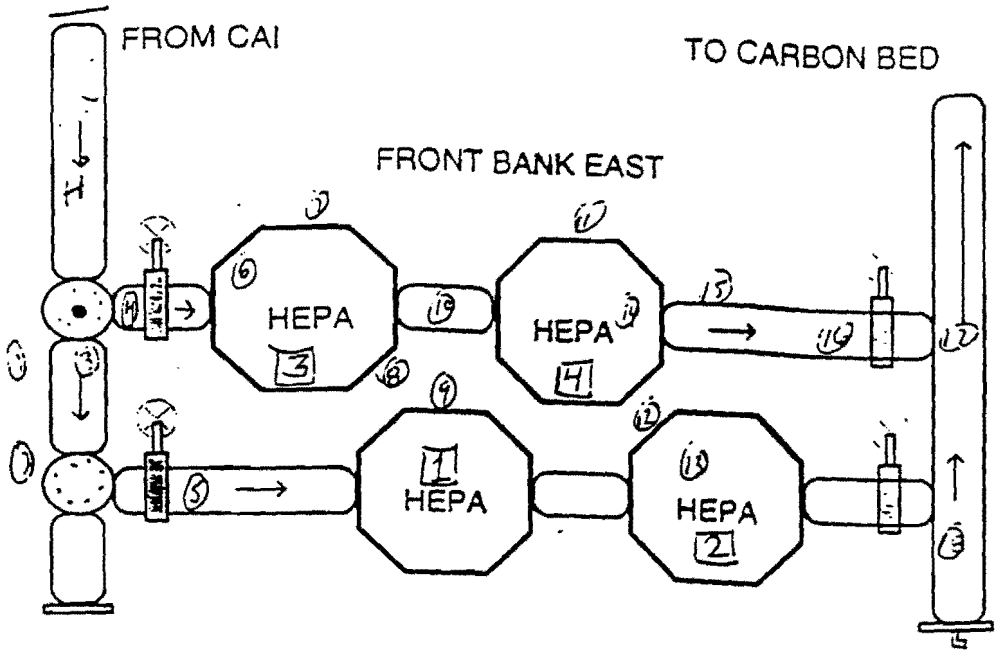
FROM CAI
TO CARBON BED
FRONT BANK EAST
HEPA
3
HEPA
4
HEPA
1
HEPA
2

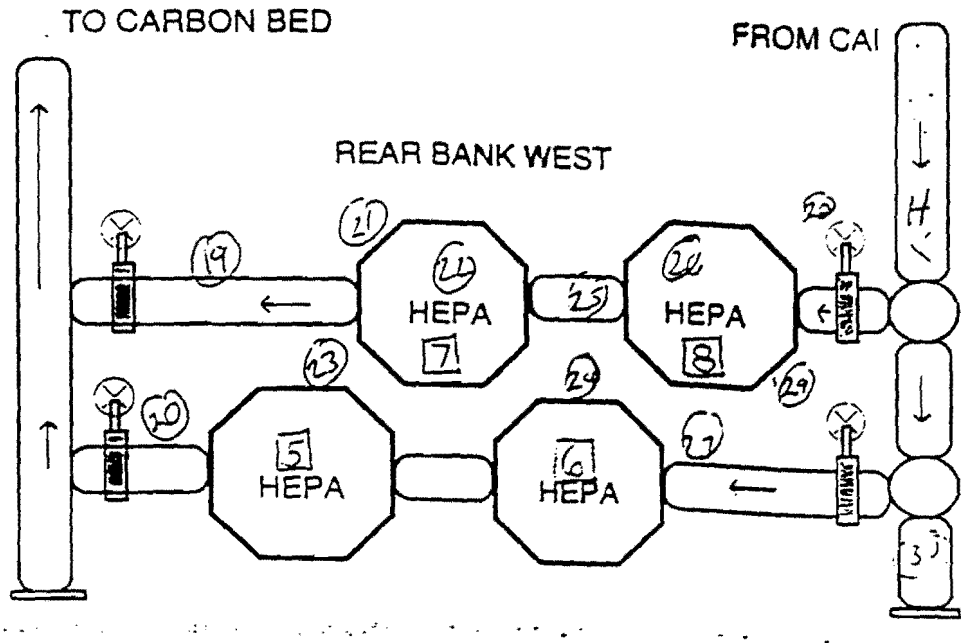
TO CARBON BED
FROM CAI
REAR BANK WEST
HEPA
7
HEPA
8
HEPA
5
HEPA
6

10/3/86 TIME: 4:05 PM

COMPONENT DECONNED: REHEATER

COMMENT: OBSERVING THE INTERIOR OF THE REHEATER, SHOWED A VERY SMALL GAUGE SCREEN AT ONE END. IT WAS DETERMINED THAT REMOVING ONE OF THE CONNECTOR SECTIONS WOULD ALLOW THE STEAM TO PENETRATE THE ENTIRE LENGTH. THE SCREEN AND THE SECTION OF CONNECTOR WILL BE DECONNED IN THE ENCLOSURE AT A LATER TIME, DUE TO RAD CONTAMINATION.

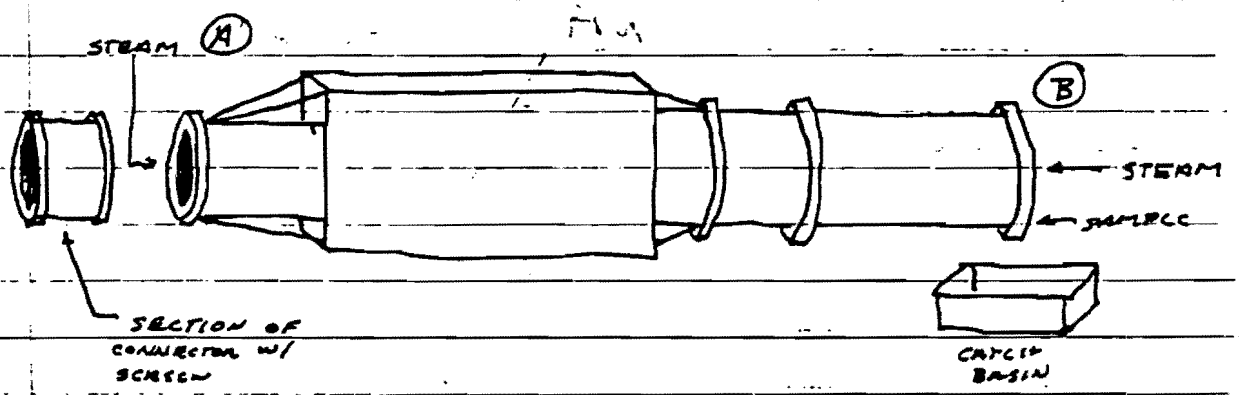

COMMENT: THIS DECON WAS PERFORMED OUTSIDE OF THE DECON CHAMBER, IN THE MAIN CAI ROOM. SCBA'S PPE + RESPIRATORS WORN FOR THIS DECON SO MY OBSERVANCES WERE FROM THE 2ND STORY WINDOW.

COMMENT: WASH WATER VERY DARK (BLACK)

RINSATE SAMPLE: CAI-RH-1 TIME: 4:30 PM

HNO_3 USED AS PRESERVATIVE

COMMENT: WATER CLEANER BUT VISIBLY DARK (GRAY-BROWN)

COMMENT: BEGAN STEAMING AT THE END MARKED A, SPENT TIME THERE, MOVED TO END B, THEN BACK TO A, AND FINALLY TOOK SAMPLE FROM END B.

SAMPLE SEALED

SAMPLE LABELED

SAMPLE FORM COMPLETED

SAMPLE FORM ENTRIES COMPLY W/ REQS

COC COMPLETED

Frank Primoje BCC

10/4/96 TIME: 2:45 PM

COMPONENT DECONNED: SOLID FEED GLOVEBOX ELEVATOR

COMMENT: THIS IS THE SECOND DECON OF THIS COMPONENT

COMMENT: WASH WATER SLIGHTLY DARK & HAS BLACK PARTICLES (SMALL)

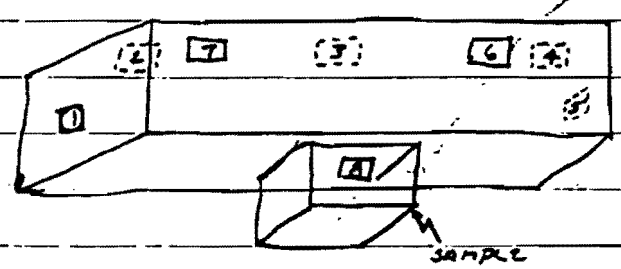

THE ABOVE DIAGRAM SHOWS EACH AREA WHERE THE STEAM WAND WAS INSERTED & SPRAYED. THESE ARE SYMBOLIZED WITH BOXES AND NUMBERS. DASHED LINES REPRESENT ACCESS ON A NONVISIBLE SIDE. ALSO THE NUMBERS REPRESENT THE ORDER IN WHICH THE PORTS WERE USED.

RINSATE SAMPLE: CAI-SF-11 TIME: 2:25 PM

ANALYZED FOR TAL METALS 250 ml POLY BOTTLE

HNO_3 USED AS A PRESERVATIVE

SAMPLE SEALED

SAMPLE LABELED

SAMPLE FORM COMPLETED

SAMPLE FORM ENTRIES COMPLY W/ REQS

COC COMPLETED.

Frank Rimoja DEC

10/7/96 TIME: 11:35 AM

COMPONENT DECONNED: ABSORBER COLUMN

COMMENT: THIS DECON TOOK PLACE IN THE DECON CHAMBER, THIS IS THE SECOND DECON OF THIS COMPONENT. WHEN OBSERVING THE DECON OF THE SOLID WASTE FEED ELEVATOR ON 10/4/96, IT WAS NOTICED THAT THE ABSORBER COLUMN WAS BEING SET UP IN THE DECON CHAMBER. THE FIRST TIME THIS COMPONENT WAS DECONNED, TWO PORTS WERE ACCESSED. THIS TIME THE SECOND PORT WAS LOCATED OUTSIDE OF THE DECON CHAMBER. AFTER DISCUSSIONS WITH JCI MANAGEMENT, OPERATORS AND THE RCT. (D. POMPEO) IT WAS DECIDED TO MOVE + RESET THE ABSORBER COLUMN TO INCLUDE THE SECOND PORT IN THE DECON CHAMBER.

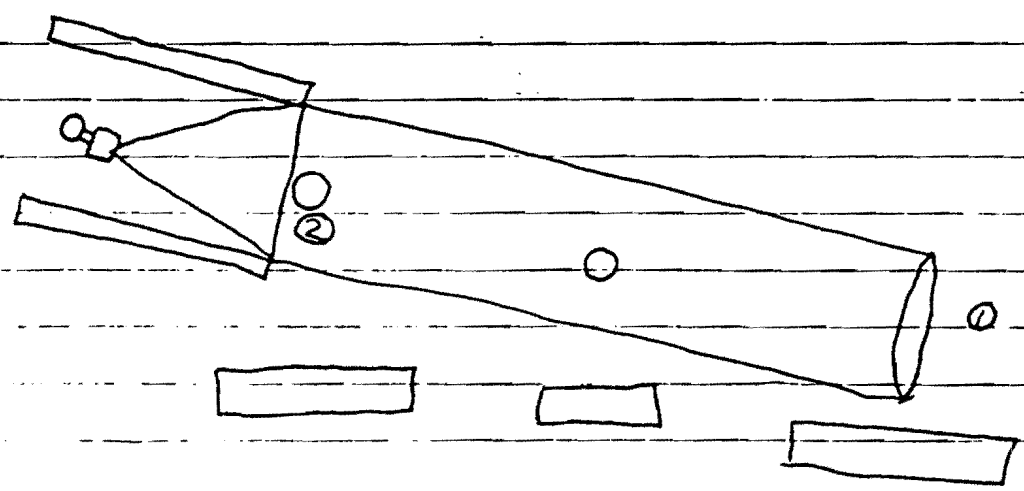

COMMENT: STARTED STEAMING AT POINT 1 THEN MOVED TO POINT 2.

COMMENT: WATER CONDENSING FROM STEAM APPEARS CLEAN IN CATCH PAN.

RINSATE SAMPLE: CAI-AT-10 TIME: 11:55 AM

SAMPLE SEALED

SAMPLE LABELED

SAMPLE FORM COMPLETED

SAMPLE FORM ENTRIES COMPLY WITH REQS

COC COMPLETED

Frank Quinoja BEC

10/17/94 TIME: 0830

COMPONENT DECONNED: SCRUBBER TANKS

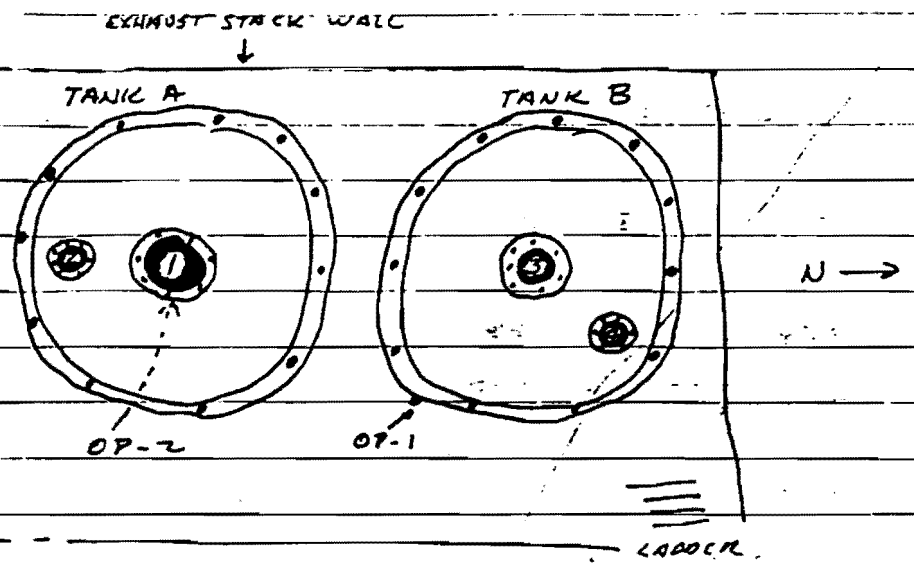

COMMENT: ACCESS PORT MARKED 1 WAS ACCESSED FOR STEAMING FIRST. THE STEAM WAND WAS MOVED AROUND IN THE PORT TO TRY AND STEAM ALL SURFACES. A BRIEF TIME WAS SPENT STEAMING ACCESS PORT 2. AFTER APPROXIMATELY 15 MIN. DECON WAS SWITCHED TO TANK B WHERE ACCESS PORT 3 WAS USED FIRST FOR DECON AND THEN PORT 4. THIS ALSO TOOK APPROXIMATELY 15 MIN.

COMMENT: AFTER STEAM WASHING THE TANKS THE WASH WATER CONTAINER WAS PUMPED TO A 55 GALLON DRUM. AT THIS TIME (0915) JCI PERSONNEL TOOK A REQUIRED BREAK.

RINSATE SAMPLE: CAI-ST-10 TIME 10:06 AM TANK B

TAL METALS, HNO_3 - PRESERVATIVE

RINSATE SAMPLE: CAI-ST-11 TIME: 1025 AM TANK

TAL METALS, HNO_3 - PRESERVATIVE

COMMENT: THE SCRUB TANKS WERE RINSED PRIOR TO SAMPLING. TIME: 10.00. TANK B WAS RINSED FIRST. TANK B WAS ACCESSED THRU ACCESS PORT 3 FOR STEAMING.

COMMENT: AFTER STEAM RINSING TANK B FOR ~6 MINUTES, CAI-ST-10 WAS TAKEN FROM OUTLET PORT 1 (OP-1) ON THE BOTTOM OF THE TANK.

COMMENT: TANK A RINSING BEGAN AT 1016 THRU ACCESS PORT 1.

COMMENT: ON SAMPLE CAI-ST-11, IT WAS NOTICED THE DRUM THAT THE RINSE WATER WAS BEING PUMPED INTO WAS NEARLY FULL. THE STEAMER WAS SHUT OFF AND A SAMPLE TAKEN. IT WAS NOTICED A BIT OF A SLUDGE TYPE SUBSTANCE WAS TAKEN AS PART OF THE SAMPLE. THE SLUDGE IS BROWNISH IN COLOR. THE SAMPLE WAS OBTAINED FROM OP-2 IN THE BOTTOM CENTER OF THE TANK.

SAMPLES SEALED — SAMPLE FORM ENTRIES COMPLY W/ RCRS

SAMPLES LABELLED — COC COMPLETED

SAMPLE FORM COMPLETED

Frank Pannozzi BEC

10/25/96 TIME: 1000

COMPONENT DECONNED: SCRUBBER TANK (SOUTHERN)

COMMENT: THE TANK WAS STEAM CLEANED FOR AN HOUR AND FIFTEEN MINUTES BECAUSE OF HIGH NICKEL RESULTS FROM THE FIRST POST DECON SAMPLE. I WAS NOT CONTACTED TO OBSERVE THE DECONNING, SO I FORCED THE OPERATORS TO RE-DECON.

TIME: 1330

COMMENT: THIS WAS THE SECOND DECONNING EVENT FOR THIS COMPONENT ON THIS DATE.

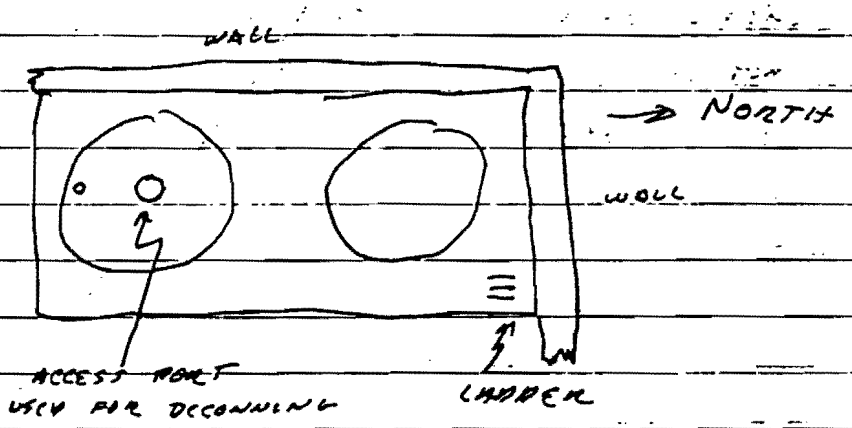

RINSATE SAMPLE ID #: CAI-ST-12 TIME: 1350

COMMENT: THERE WAS NO VISIBLE MATERIALS IN THE RINSATE SAMPLE THIS TIME.

SAMPLE SEALED — SAMPLE FORM ENTRIES COMPLY W/ REQS

SAMPLE LABELED — COC COMPLETED

SAMPLE FORM COMPLETED — Frank Pringle BEC

11/2/96 TIME: 1450

COMPONENT DECONNED: QUENCH COLUMN

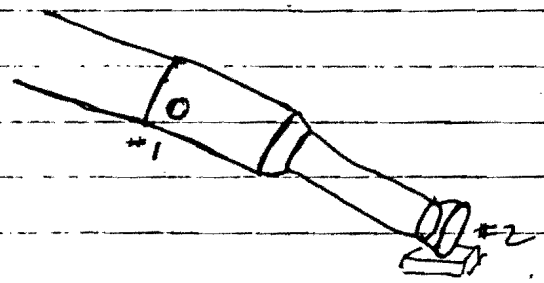

COMMENT: DECONNING INITIATED AT ACCESS PORT MARKED #1. DECONNED FOR ~ 5 MINUTES. WATER NOT DRAINING OUT.

COMMENT: SWITCHED TO ACCESS PORT #2. ALSO STEAMED ~ 5 MINUTES.

COMMENT: H_2O IN THE CATCH PAN LOOKS CLEAN.

COMMENT: DIFFICULTY TAKING SAMPLE, OPERATOR'S RESPIRATOR FOGGED UP & HE CAN'T SEE TO TAKE SAMPLE.

RINSATE SAMPLE: CAI-QT-15 TIME: ~~0~~ 1509 11/2/96

11-15-96

component decorred: ash dump (fit into hole called ash pit)

Sample bag + bottle info:
"For rinsate sample from the ash removal system hopper. Sample + duplicate

CA1-AR-11 - sample
CA1-AR-12 - duplicate of CA1-AR-11
sample taken of the alkyne rinsate solution coming off the hopper right after "AR-11 is taken."

Dominique P. + Kenny? entered enclosure at 9:00.
9:15 - affixed air sampler/monitor to side of enclosure
9:55 - taping up some places on the ash dump before beginning steam.

10:00 turned steam on
[note - seems difficult to clean all angles of the unit. There is not enough space to move the wand around.]

10:06 turned steam off

J. Freeman

184-1967
Dominique
Pager

(53)

10:09 Started steam up again as rinse

10:10 hose pump opened into barrel - draining into 55-gal. drum.

10:12 - Sample taken from drain port.
- duplicate taken from same location.

10:15 - turned steamer off

10:17 removed tyvek & exited enclosure.

10:25 - sample bottles closed & taped, bagged. Ron Conrad was called to come get samples.

- air filter was removed to be looked at by Dominique.

J. Sussman

Mon. Nov. 18, 1996 54

1:30 D. Pompeo taking samples of ~~pump~~ pipes.

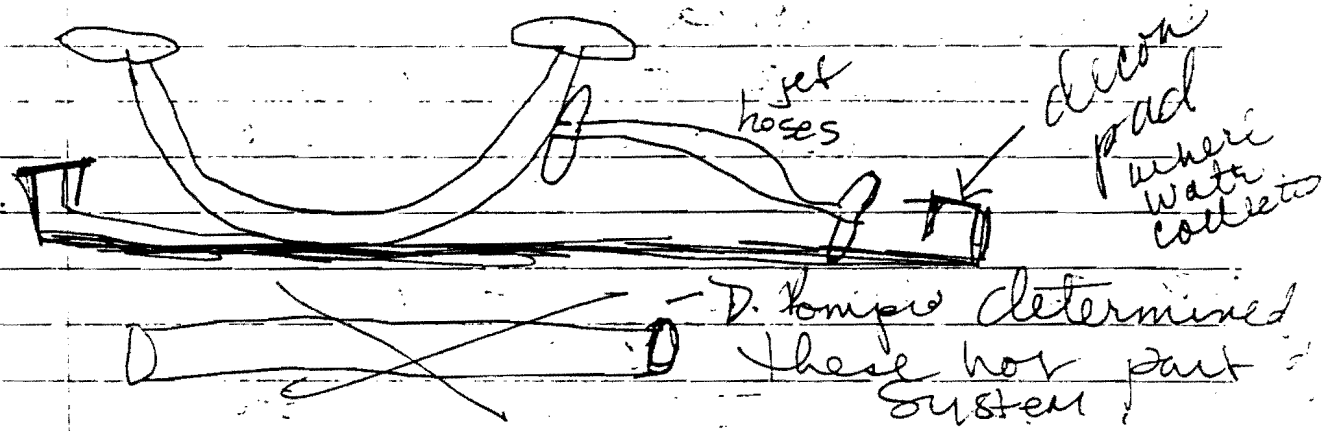

these were materials that "fed" the quench. Wrapped around the quench column. "Jet system for quench" primary loop water system

1:50 D. Pompeo decide & not to triple rinse - too many leaks - couldn't adequately plug them.

- 3 pieces - will only take one sample of all 3 - since all 3 came in contact w same liquid matrix (composite sample)

1:51: started steam

1:53 - turned off steam -

- S² observed that no H_2O was emerging from indiv. jet hose.

Sussman

- pipe moved to allow steam to reach indiv. ~~pi~~ jet hose

1:55 - steam turned on again.
1:56 steam turned off
1:57 1st pipe ~~removed~~ drained into pan & removed placed on pallet

1:59 2nd pipe put into pad

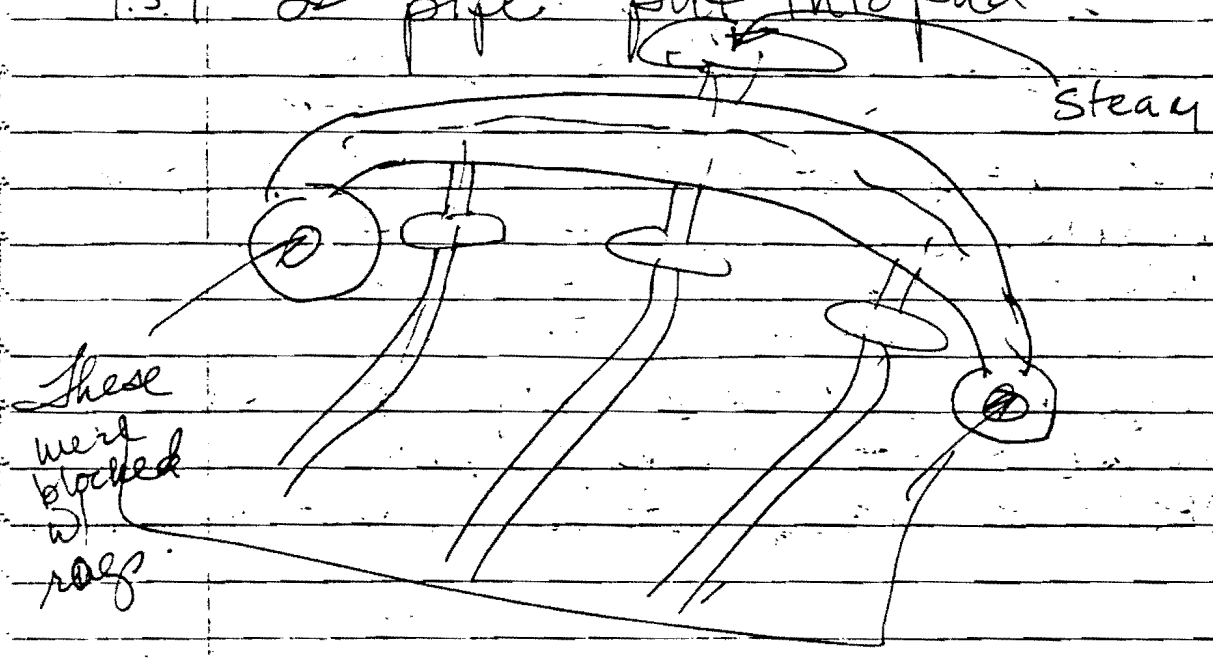

2:04 - 2nd pipe drained & removed from pan & placed on pallet.

2:05 3rd ~~pipe~~ pipe put into decon pad

5

36

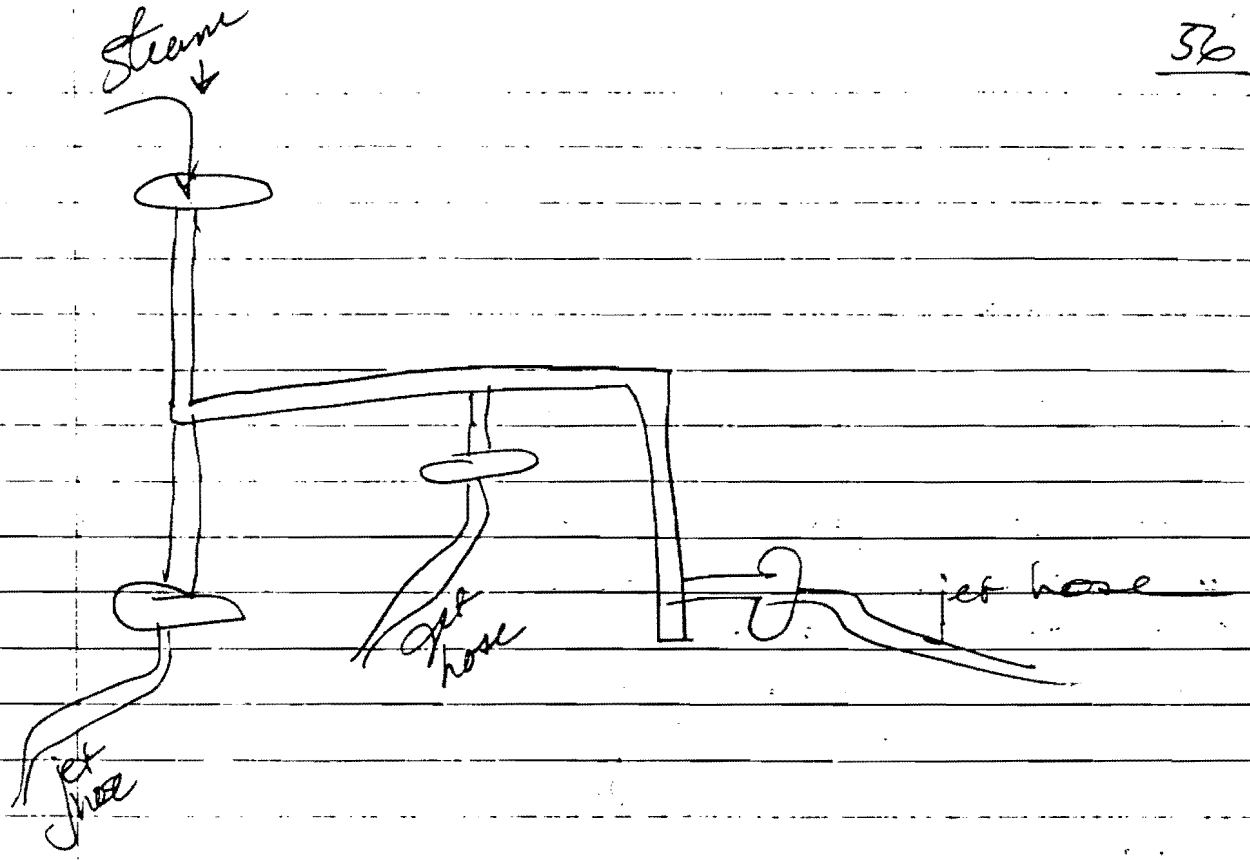

2:06 Steam started
2:10 Steam off.
- pipe drained & removed to pallet.

- pallet covered & taped up.

2:15 D. Pomeroy - took sample bottle from deepest end.
- bottle was taped.

Sample ~~EA-ST-20~~ (unless changed by Ron Conrad.) Ron O. called for pick up.
2:20 pan water pumped out.

A. Surmen

CAI-QT-20

MONDAY 12-2-96 JOHN KINKER - INSPECTING
0900

* NO WORK DONE TODAY *

9:00 MET WITH GEORGE P. WITH JCI
NEW GUY, WASN'T FAMILIAR WITH DECON
PARTS OR EQUIPMENT TO BE DONE. WORK
CREW DID NOT SHOW UP. ASKED KIETH RANDALL
WHO WAS SUPPOSED TO MEET ME AT 0900
AT TA-50-37. HE SHOWED UP AT APPROX.
10:15. DISCUSSED HEPA RE-DECON BRIEFLY.
SAID THEY WOULD RESCHEDULE FOR THURSDAY 12/6.
DISCUSSED PIPING DECON. TOLD HIM HYDROCYCLONE
MISSING. TOLD HIM TO DECON FLOW METERING
AND BLOWDOWN LOOPS THAT COME OFF OF
BOTH TANKS (RECIRC. + BLDG. SUMP) IN
TANK PIT. KIETH SEEMED SURPRISED BY THIS.
GEORGE WAS PLANNING TO DIS-ASSEMBLE PIPING
IN TRENCHES ONLY. THEY BOTH SAID THEY
WOULD BRING THIS ISSUE UP WITH KEN HARGIS
AND WILL GONZALES, WHO WAS OUT SICK.

11:00 MET WITH FRANK PAMOZIC (DEC INSPECTOR) TO
DISCUSS PIPING DECON. FRANK SAID THAT THE
DECON OF THE FULL EXTENT OF PIPING
WAS ALREADY DISCUSSED WITH WILL G., KIETH R.,
AND KEN HARGIS.

(57)

ACCORDING TO FRANK P., THE FOLLOWING ITEMS WERE STILL NEEDING DECON:

- HEAT EXCHANGER (LIQUID)
- PIPES IN FLOOR
- PIPES IN TANK PIT
- PIPES + APPURTENANCES STORED IN TRANSPORTAINERS
- HEPA PLENUM (BEDECON)

HE SAID THAT SOME OF THE PLANG FROM THE SCRUB SOLUTION RECYCLE SYSTEM HAD BEEN TAKEN OUT AND STORED IN THE TRANSPORTAINERS OUTSIDE OF THE BLDG.

11:50 TO 12:00 TRIED TO GET KIM HARRIS ON PHONE TO INFORM HIM OF TONIGHT'S TRANSFERS. GOT LEFT A VOICE MSG. WILL TALK LATER.

LEFT BLANK

John Brooks

9:20 –
Walked out into equipment bay – observed pipe doing decon.
ERIC Trujillo ~~IA~~ SUID that
- used steamer for approx 30 min. on various pipe configurations.
- JCI has already completed the "first pass through" of steam cleaning w/ no oversight.
- Waste water stored in 55 gallon barrel.

– Re HEPA's

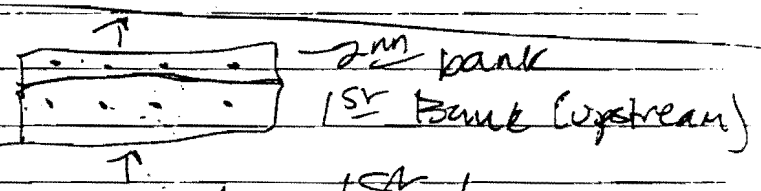

Doing 2 cores from the 1st bank.

Will: everything from transportainer was filter deconned 2x.

Mary Jane W. & Will Gonzales took inventory of SEG boxes.
MJ will get me copies of the WPFs for these containers.

Break at 10:12 a.m.
reconvene at 11:00

A. Jackson

(60)

NA

Blank

A. Sussman

MJ Winch
RCT - Derrick Harris
(61)

11:05

- some filter from pre-filter
- 2 cores from 2 separate HEPA - one from ea. inlet and outlet.

1. - HEPAs contained in glove bag.
2. used drill to get core to extract paper material from HEPA filters (downstream side)
3. Will flipped it over & took some filter paper from other end (upstream side)
4. ea. bottle will be filled w/ equal thirds of pre filter paper downstream & upstream
5. Ricky Barrod (sp?) took sample from other bugged filter.
6. Samples will be put into sample bottles in the hood.

(42)

NA

Blank

S. Susman 12/20/94

2:20 pm 12/20/96

(63)

CA1-HF-1 - corner piece (will E's)

CA1-HF-2 Gloves piece (Ricky Baros)

1. bottle weighed w/o lid - need to get 100g. of samples

2. using "composite": 1/3 pre filter; 1/3 intake, 1/3 exit.
- included aluminum + filter paper
- sample was more aluminum than paper.

3. CA1-HF-1 - collected 2:35 p.m.

4. adding composite from CA1-HF-2 into 2nd bottle.

- closed 2:50 p.m. 7200gr. less ~~weight~~ bottle weight of 1000 ml emp

5. both bottles have chain of custody seals.

6. MT Winch had sample taken.

A. Sussman 12/20/96

bt

NA

BLANK

A Susman

65

Went through pipes that will be used for sampling on 11/7/97.

NA

L. Lussman

6b

NA

A. Auerman 1-7-97

7/97

Continue sample #'s
initiated/directed by
Virgil Childers

1. Rear upper glove box CA1-RU-1
2. Secondary Cooling System - CA1-SC
3. Hydrocyclone - CA1-HC
4. Sumps (tanks) CA1-PM
5. Floors (at least 2 samples) CA1-PI
6. HEPA Banks CA1-HB

Heat Exchanger

WWG - Secondary Cooling never been washed before. Will take 2 samples, one from process liquid line, one from rear line.

Hydrocyclone never been done. Will do quick wash & then rinse.

Pipes will be done 1st (18 pipes) Margins coated
Already washed once.
- 15-5 pipes taken to wash pad now started
- Virgil combined sampled from 4 pipes into one sample

J. Lessman 11/1/97

(68)

- la. pipe washed with steam for approx. 10-15 seconds.

1st nine pipes [CA-PI-1] Chain of custody placed on bottle.

2nd nine pipes [CA1-PI-2] Chain of custody placed on bottles.

2 pumps next.

1 sample bottle for both

CA1-PM-1] - Chain of custody placed on ~~bottle~~

pumps washed first.
Samples taken from rinse.

hydrocyclone - (already washed once)
CA1-HC-1

A. Kaufman 1/7/97

5-6158

2dary cooling system Heat Exchanger (69)

SC-1 - process flow
SC-2 loop

Washed first b/c never been washed.

- Samples taken of rinse.

Stopped work at 11:45 a.m.

A. Sussman
1/7/97

79

8/8

NA

S. Sussman
1/7/97

71

8/8/97

ON 5/27/97 A REVIEW WAS PERFORMED TO DETERMINE IF CAI COMPONENTS DOCUMENTED AS REMAINING TO BE TRANSPORTED TO A TSDF FOR FURTHER PROCESSING WERE PRESENT AT TA-50, OUTSIDE BUILDING 37. WILL GONZALEZ (JCI) AND KEITH RENDELL (FSS-4) WERE ALSO PRESENT FOR THE REVIEW.

USING A LIST OF CAI COMPONENTS THAT HAD NOT BEEN FINALLY DISPOSITIONED, EACH OF THE SEG BOXES CONTAINING CAI COMPONENTS WERE OPENED AND INSPECTED TO SEE WHERE EACH CAI COMPONENT WAS LOCATED. FOR MOST OF THE EQUIPMENT, A VISUAL CONFIRMATION WAS OBTAINED BUT SOME EQUIPMENT THAT WAS PLACED IN THE SEG BOX FIRST WAS HIDDEN. ON THESE PIECES THE REVIEWER DEPENDED UPON W. GONZALEZ'S MEMORY OF WHAT EQUIPMENT WAS LOCATED IN THE FRONT OF THE SEG BOX.

THE REVIEWER USED CLUES OBTAINED FROM JCI TO PROVIDE REASSURANCE OF THE QUALITY OF DATA OBTAINED. (e.g. W. GONZALEZ STATED THAT 2 PUMPING SYSTEMS WERE LOCATED IN THE FRONT OF THE SEG BOX, THE FACT THAT THERE WERE A QUANTITY OF 2 WAS CONFIRMED BY THE RECORD.)

AS EACH COMPONENT ON THE LIST WAS OBSERVED,

(72)

ON A NOTE WAS MADE ON THE LIST OF WHICH SEG BOX, THE COMPONENT WAS LOCATED IN. THE LISTS USED FOR THIS REVIEW ARE DOCUMENTED ON THE FOLLOWING LOG BOOK PAGES. Frank Primozic 8/8/97

NA

73

NOTE: 5 pgs of TRANSPORTAINER LOG ATTACHED
#'s INDICATED IN RIGHT COLUMN ~~[illegible]~~
TRANSPORTAINER NUMBER CONTAINING THE
LISTED ITEM. J K [illegible] 8/15/97

NA

74

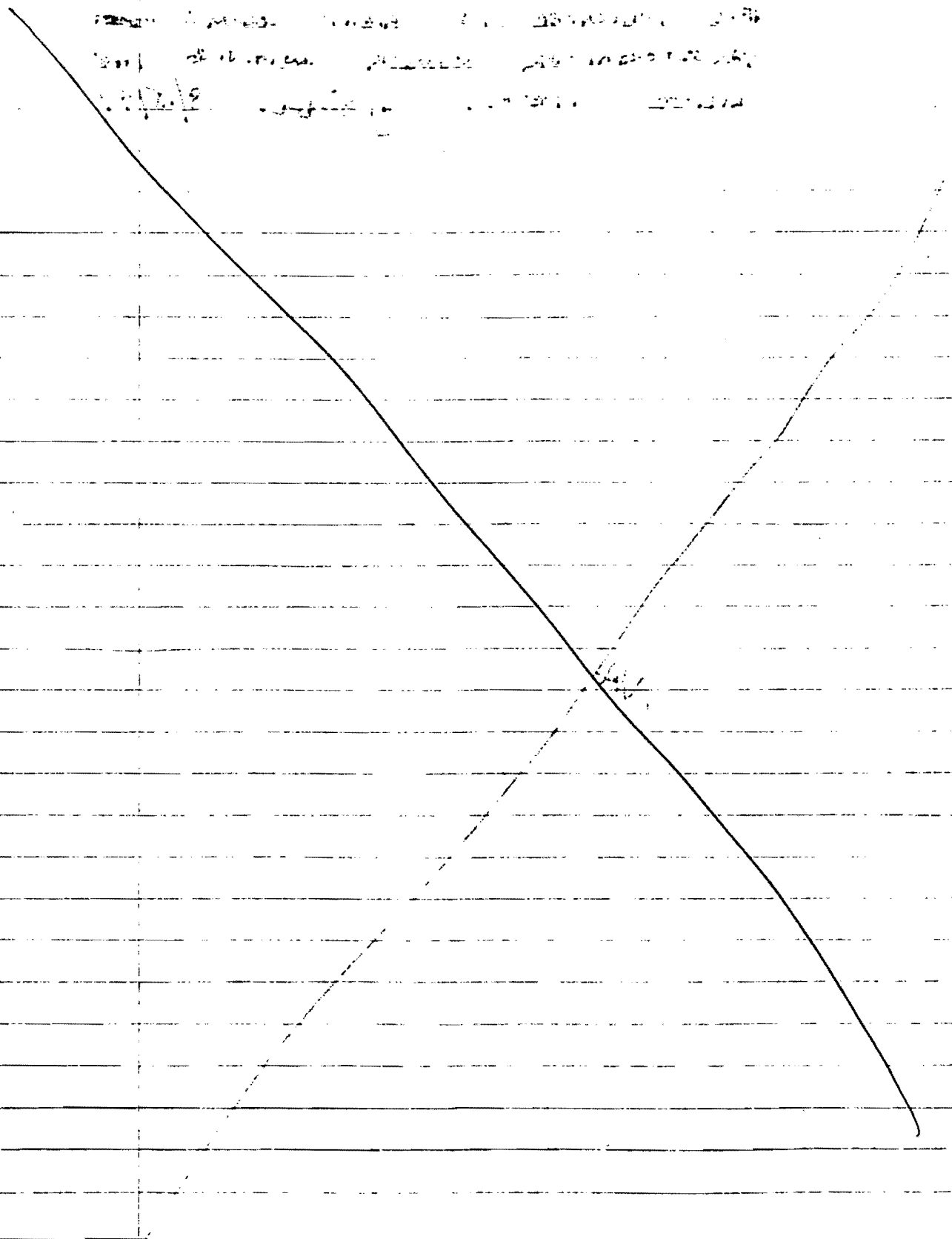

5/23 Rearrange in Primary & Contract Ancillary

(3-1 ?)

Table 5-1. Closure Inspection Log Summary of Decontamination Activities

Component	Sampling/Decontamination Method	Date/ Log Page	LANL Sample ID Number and Description	Paragon Analytical Sample ID Number	Sample Matrix	Performance Standard Met (Y/N)	Disposition of Component
Carbon Absorber	Decon was not observed, but sampling was observed.	09/12/96 pg. 18	CAI-AC-4 VOCs	96-09-109-01	water	No	METAL HOUSING - ACE METALS RECYC CARBON TO LANDFILL
			CAI-AC-5 TAL metals	96-09-110-01	water	No	
Quench Tower (PC) (see pg 3) (yes 5/23)	Steam injected into three locations (original liquid injection ports) for approx. 20 minutes. Rinsed for approx. 10 minutes and rinsate collected.	9/18/96 pg. 19-20	CAI-QT-5 TAL metals	96-09-117-01	water	No	* SEG BOX #238
Solid Feed Glovebox (RAM elevator) (yes 5/23)	Steam injected through one end; rinsate was drained into pans for sample collection.	9/23/96 pg. 22-23	CAI-SF-8 VOCs, SVOCs, TAL metals	96-09-158-03 (metals) 96-09-157-04 (SVOCs) 96-09-157-04DL2 (VOCs)	water	No	* #238
Absorber Column (yes 5/23)	Steam injected through side port and continued for 5 minutes	9/23/96 pg. 24	CAI-AT-5 TAL metals	96-09-158-02	water	No	* #238 IN BACK OF SEG CONTAINMENT
RAM Glovebox this is Main RAM Feeder 5/23	Steam injected through four openings in glovebox housing until it ran clear. Effluent captured in drip pans.	9/25/96 pg. 25	CAI-SF-10 VOCs, TAL metals	96-09-176-01 (metals) 96-09-175-01 (VOCs)	water	No	#227
Cross-over ducts from absorber tower to HEPAs (3 parts).	All three pieces were steamed together and the rinsate was combined. Steam was applied at the ends opposite the duct elbows. SEG list "Stainless steel piping A, b, c, etc (p. 1)	9/27/96 pg. 27	CAI-FG-1 TAL metals	96-09-190-02	water	Yes	#238 TA-54 VOCs
			CAI-DE-1 TAL metals	96-09-190-01	water	Yes	TA-54 VOCs

Is this the same as Quench column? (3)

a.k.a side RAM feeder

Is this same as absorber tower

ile

Component	Sampling/Decontamination Method	Date/ Log Page	LANL Sample ID Number and Description	Paragon Analytical Sample ID Number	Sample Matrix	Performance Standard Met (Y/N)	Disposition of Component
			CAI-H-1 TAL metals	96-09-190-03	water	Yes	
Venturi Scrubber	Steam injected at one end through a port and effluent exited through a second port. Steam injected for 10 minutes.	9/27/96 pg. 28	CAI-VNT-1 TAL metals	96-09-190-04	water	Yes	TO SEG, TA 52 docs #227 CANT SEE IN BACK OF SEG
Refractory	Used hammer to pulverize refractory in place.	9/27/96 pg. 30	CAI-QT-10 TCLP	96-09-192	solid	Yes	TA 52 docs
Ash Hopper Valves "Ash Dump Doors" pg. 2 SEG	Stainless steel sheets pulled from housing, rinsed with hot water and steam cleaned. Valve housing and valve steam cleaned. Rinsate sample taken only from the single valve to represent worst-case.	9/30/96 pg. 35	CAI-AR-10 TAL metals	96-10-013	water	Yes NO - did not pass the perf. stand.	#238 W/ASH HOPPER TA 52 docs
HEPA Bank Entry Plenum	Steam was injected at three locations. Valves to HEPA plenums were closed during steam injection.	10/1/96 pg. 36	CAI-HP-10 TAL metals	96-10-028	water	No	ATTACHED TO HEPA HOUSINGS Added to
HEPA Filter Housings and Cross-Over Piping	Used Alconox solution and wet cloths to wipe internal surfaces. Followed by clean cloths and clean water. One combined sample was taken from rinse water from each filter housing	10/2/96 pg. 37	CAI-HP-11 TAL metals	96-10-040-01	water	No	[illegible] 10/20/92 BEHIND CAI

78

Component	Sampling/Decontamination Method	Date/ Log Page	LANL Sample ID Number and Description	Paragon Analytical Sample ID Number	Sample Matrix	Performance Standard Met (Y/N)	Disposition of Component
HEPA Bank Exit Plenum	Steam cleaned through each horizontal duct opening and top vertical opening.	10/3/96 pg. 39	CAI-HP-14 TAL metals	96-10-040-03	water	No ATTACHED TO HEPA HOUSING BEHIND CAI	added to Seg list Hauling 5/20
Reheater on SEG	Steam injected through both ends of unit, alternating between sides several times.	10/3/96 pg. 42	CAI-RH-1 TAL metals	96-10-055-02	water	No	SEG - #227
Solid Feed Glovebox ~~Elevator~~ *Second Decon.* FAN Elevator	Steam injected at 8 locations.	10/4/96 pg. 45	CAI-SF-11 TAL metals	96-10-055-03	water	No	#238 ATTACHED TO SIDE RAM FEED
Absorber ~~Column~~ *Second Decon.* Absorber tower	Steam injected through two ports of the column.	10/7/96 pg. 46	CAI-AT-10 TAL metals	96-10-055-01	water	No	ATTACHED TO ABSORBER COLUMN IN #238
Scrubber Tanks	Each tank had two ports. Both parts of each tank were steamed for approximately 15 minutes. Both tanks were rinsed prior to sampling. Rinsate transferred from tanks via pump to a 55-gallon drum.	10/17/96 pg. 48	CAI-ST-10 TAL metals	96-10-139-01	water	No	STILL RESIDES IN PIT
			CAI-ST-11 TAL metals	96-10-139-02	water	No	
Scrubber Tank (Southern) *Second Decon.*	One tank was cleaned a second time for approximately one hour due to high levels of nickel.	10/25/96 pg. 50	CAI-ST-12 TAL metals	96-10-187-01	water	No	RESIDES IN PIT
Quench Column on SEG list	Steam was injected in each of two ports for approximately 5	11/2/96	CAI-QT-15 TAL metals	96-11-084-01	water	No	#238 ATTACHED TO QUENCH TOWER

No SEG info on this

80

Component	Sampling/Decontamination Method	Date/ Log Page	LANL Sample ID Number and Description	Paragon Analytical Sample ID Number	Sample Matrix	Performance Standard Met (Y/N)	Disposition of Component
	minutes.						
Ash Dump	Steamed unit for approximately 10 minutes through one port. Sample taken from drain port.	11/15/96 pg. 52	**CAI-AR-11** TAL metals	96-11-113-01	water	No	*#238
			CAI-AR-12 Duplicate of AR-11	96-11-113-02	water	No	
Pipes from jet system for Quench (primary loop water system)	5 pipes were steam cleaned, and one composite sample of all 5 was taken.	11/18/96 pg. 54	**CAI-QT-20** TAL metals	96-11-176-1	water	NO	*#238
HEPA Filters (2)	Cores were extracted from both the upstream and downstream filters. Cores included equal parts pre-filter, filter body, and exit screen.	12/20/96 pg. 63	**CAI-HF-1** TCLP Analysis	96-12-155-1	solid	Yes	
			CAI-HF-2 TCLP Analysis	96-12-155-2	solid	Yes	
Secondary Cooling System (Heat Exchanger)	Steam cleaned and two samples taken; one from process liquid line, and one from loop line.	1/7/97 pg. 67	**CAI-SC-1** (process flow) TAL metals	97-01-022-5	water	No	BEHIND CAI PIPING IN #227
			CAI-SC-2 (loop line) TAL metals	97-01-022-6	water	No	
Hydrocyclone	Steam cleaned.	1/7/97 pg. 67	**CAI-HC-1** TAL metals	97-01-022-4	water	No	#227
Scrub Solution	Both pumps were steam	1/7/97	**CAI-PM-1**	97-01-022-3	water	No	#238

NO LOG INFO.

"palet of drinkes steel piping" 5123-??

NO LOG INFO.

formatting based next page

.5

[redacted]

32

Component not on SEG	Sampling/Decontamination Method	Date/ Log Page	LANL Sample ID Number and Description	Paragon Analytical Sample ID Number	Sample Matrix	Performance Standard Met (Y/N)	Disposition of Component
Recycle Pumps (two) from Sump Tank and Blowdown Tank	cleaned. Rinsate from both pumps was combined for a single sample.	pg. 67	TAL metals				#238
Scrub Solution Recycle System Piping "2" to 4" stainless" piping (pg. 1) SEG list	A total of 18 pipe sections were divided into two groups of 9 each. Each pipe section received a quick steam clean, and two rinsate samples were taken of each group of 9 pipes.	1/7/97 pg. 67-68	**CAI-PI-1** TAL metals	97-01-022-1	water	No	#227
			CAI-PI-2 TAL metals	97-01-022-2	water	No	

84

FUNK INSPECTION + WALKTHROUGH 8/15/97

SUZANNE HELFINSTINE FAC. ENG.
SHELLEY SUSSMAN
JOHN KINKER KEN HARRIS

RM 112
SCRUB SOLN RECYCLE TANKS STILL IN PIT AND ACCORD. TO SH WILL REMAIN

ALL PIPING AND PUMPS REMOVED

RM 115
FEED TANKS AND PLUMBING REMOVED

STACK SYSTEM
FANS AND ASSOC. EQUIP. IN PLACE AS NOTED IN LETTER FROM NMED

S. HELFINSTINE STATED THAT ALL CAI EQUIPMENT, ETC. HAD BEEN COMPLETELY REMOVED AND ALL MATLS WE SAW BELONGED TO RAMROD OR DAHRT.

BRIEFLY DISCUSSED W/ KEN H. THE NEED TO GET THE TANKS INTO THE RAMROD PERMIT

John K

END OF LOG

8-19-97

~~DUETTCC~~

- DUCT WORK - WHAT'S GOING TO BE DONE W/ THAT
- DUCT LINED W/ REFRACTORY SHOULD BE JUST LLW } CROSS-OVER INTO THE QUENCH
- THE LIQUID FROM DECONNING WILL BE SAMPLED FOR CHARACT. TO SEE IF IT CAN GO TO TA-50.
- SCRUB SOLUTION (SCRUB TANKS)
- BLOWERS - GOING INTO STACK

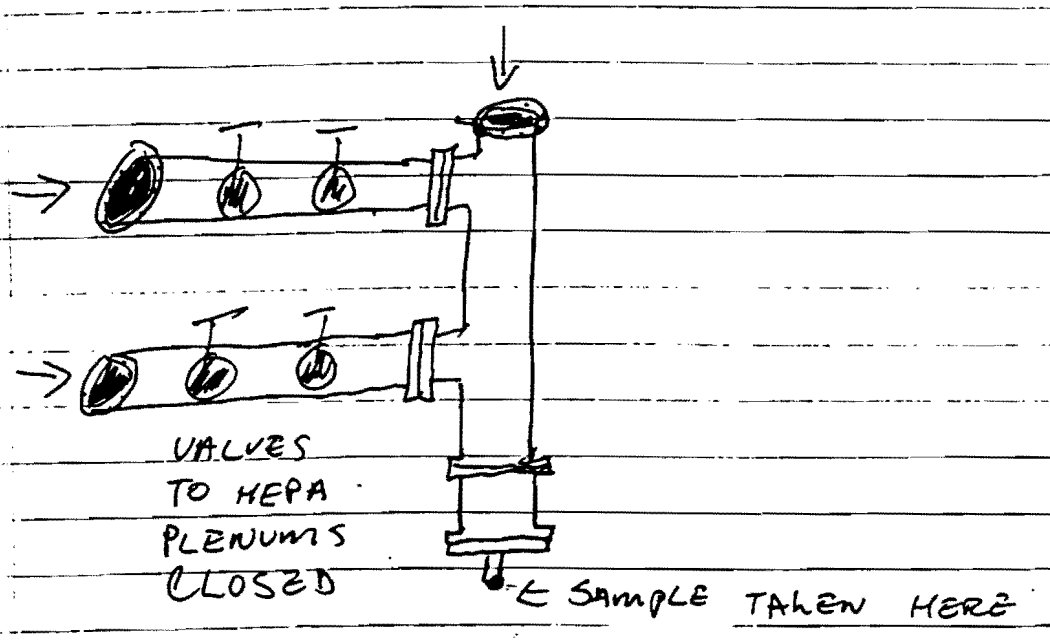

Nov. 19. 1996 11:02AM No. 9333 P. 1/1

Fax Transmittal Memo 7672

To SHELLEY

Company

Location

Fax #

Telephone #

Comments

No. of Pages

Today's Date

Time

From JOHN K.

Company

Location

Dept. Charge

Fax #

Telephone #

Original Disposition ☐ Destroy ☐ Return ☐ Call for pickup

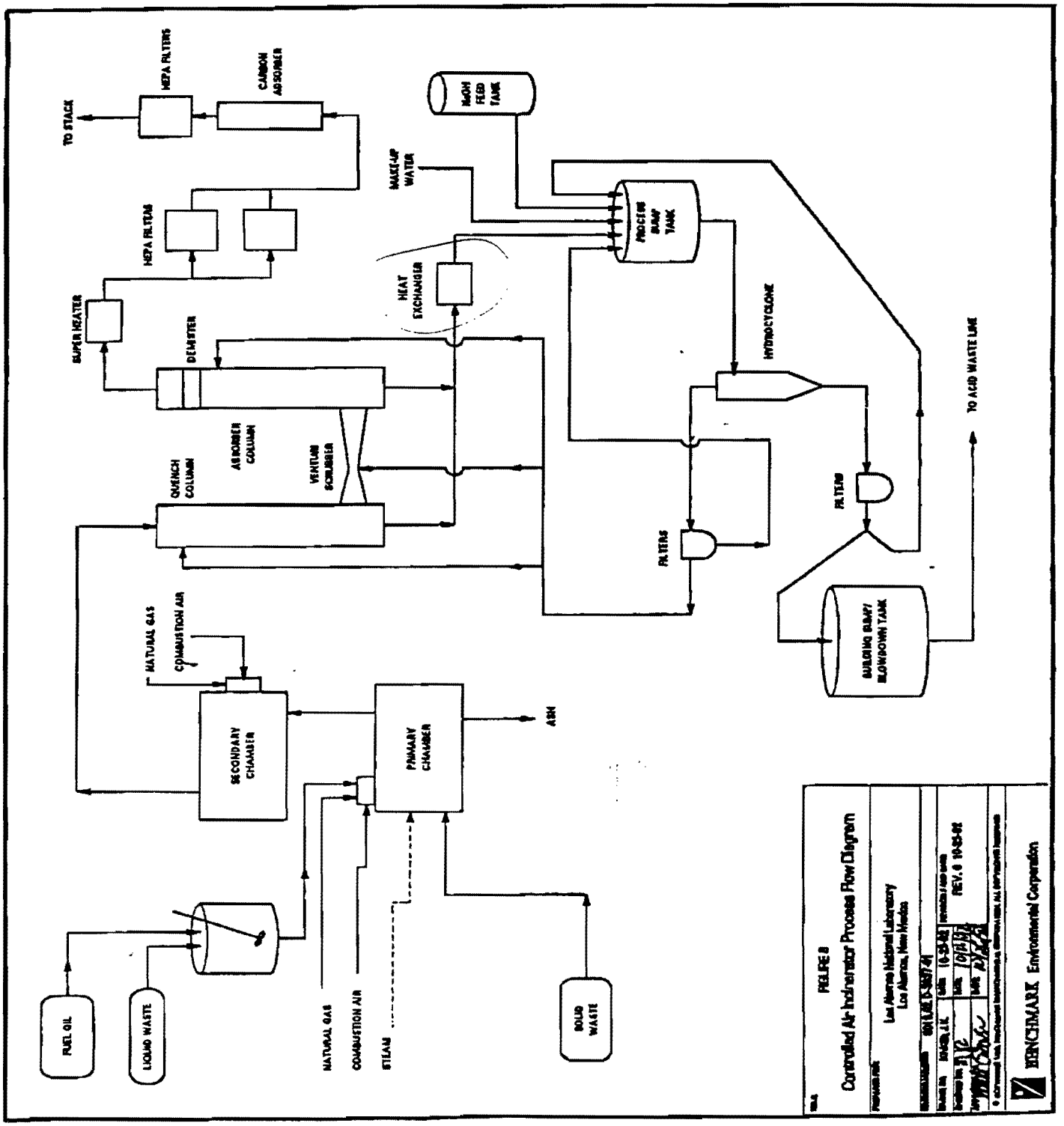

Nov. 13. 1996 11:02AM No. 9333 P. 1/1

Fax Transmittal Memo 7672

To Shelley

Company

Location

Fax #

Telephone #

Comments

No. of Pages

Today's Date

Time

From Tom K.

Company

Location

Dept. Charge

Fax #

Telephone #

Original Disposition ☐ Destroy ☐ Return ☐ Call for pickup

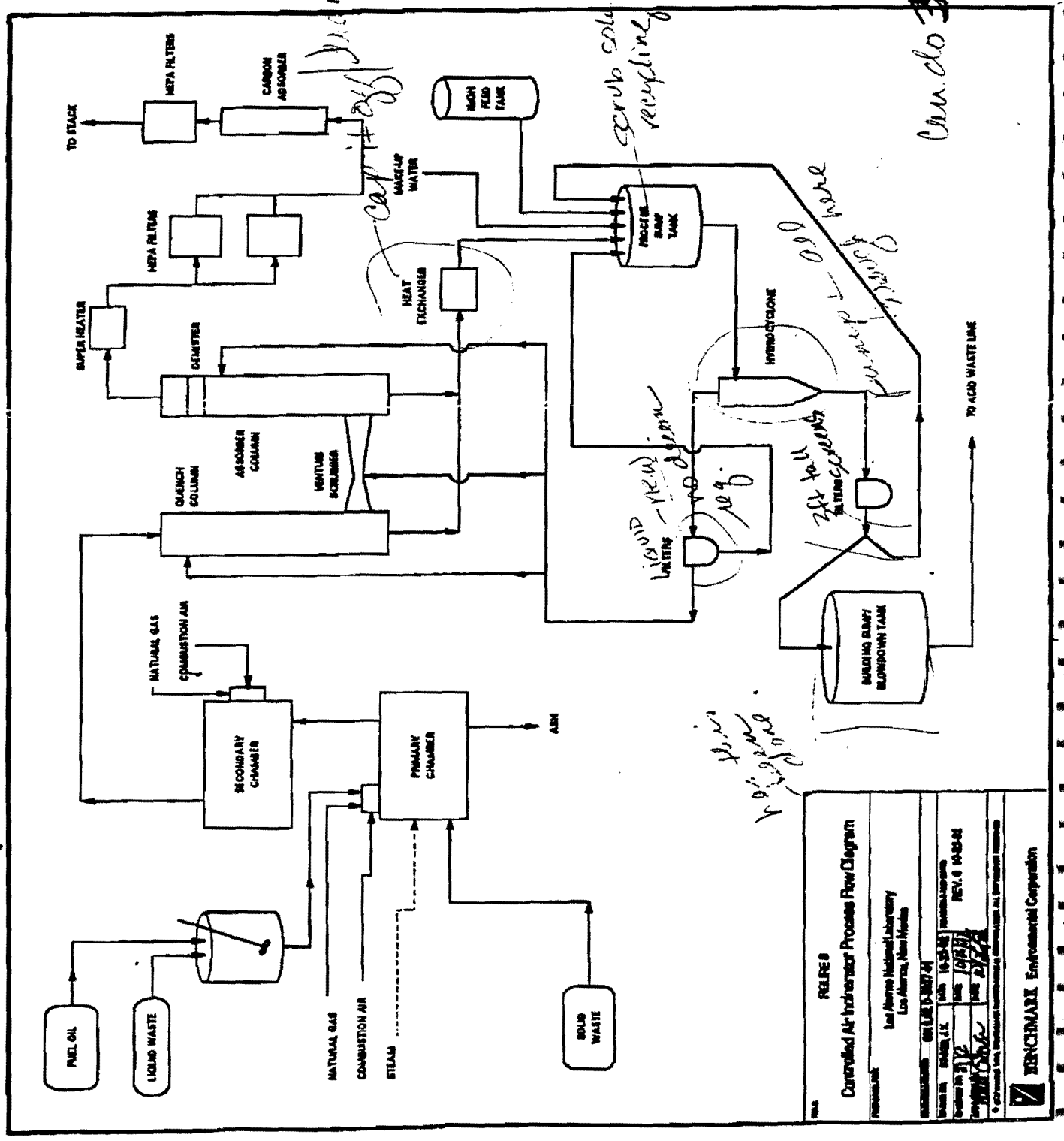

Melton made determination that H rates as "analgam" landfillable deposited materials throughout.

Sheet1

CAI LAB RESULTS
FROM R. Conrad +
K. Hodges

CONTROLLED AIR INCINERATOR FINAL RINSATE METAL ANALYSES ALL UNITS IN MG/L

1/16/97

Sample ID	Al	Sb	As	Ba	Be	Cd	Ca	Cr	Co	Cu	Fe	Pb	Mg	Mn	Hg	Ni	K	Se	Ag	Na	Tl	V	Zn
[illegible]		0.041	0.012	0.028	0.009	0.0000		0.0126				0.01			0.00002	0.006		0.012	0.001		0.003		
RBC		0.015	0.011	2.6	0.00002	0.018		37				0.05			0.011	0.73		0.18	0.18		0.000		
CAI-AC-5	0.037	0.003	0.004	0.013	0.0008	0.0003	10.6	0.004	0.0009	0.003	0.579	0.001	3.3	0.104	0.0004	0.033	1.08	0.006	0.031	114	0.003	0.006	0.3
AC-5 is rinsate sample from activated carbon unit																							
CAI-QT-5	0.25	0.009	0.004	.168 B	0.0001	0.0009	11.5	0.014	0.003	0.014	1.1	0.018	2.2	0.023	.00008 B	0.118	2.18	0.002	0.001	12.1	.0048	.011	0.27
QT-5 is rinsate sample from the quench tower																							
CAI-QT-18	0.008	0.004	0.007	0.032	0.0002	0.0002	11.6	0.009	0.002	0.006	0.475	0.002	3.18	0.012	0.00006	0.052	2.28	0.003	0.0007	13.4	0.003	0.013	0.102
CAI-QT-20	0.008	0.004	0.004	0.028	0.00007	0.002	13.8	0.02	0.005	0.018	0.295	0.006	3.45	0.013	0.00008	0.13	2.45	0.004	0.0007	14.4	0.003	0.009	0.50
CAI-AT-5	3.36	0.174	0.011	1.26	0.0003	0.044	41	0.394	0.038	0.489	33.7	0.224	8.9	0.607	0.0003	2.18	18.8	0.006	0	.003 B	.006 B	0.023	2.3
AT-5 is first rinsate sample from the absorber tower																							
CAI-AT-10	0.100	0.239	.002B	0.018	.0001B	0.006	16.2	0.025	.005B	0.05	0.423	0.014	2.8	0.049	.0002B	0.507	2.08	.002B	.001U	13	.003B	.013B	0.263
AT-10 is sample of second rinse of absorber tower																							
CAI-SF-8	1.36	0.117	0.002	.116 B	0.0001	0.013	12.7	0.323	0.009	0.354	8.04	0.059	2	0.480	0.0004	0.222	4.87	0.002	0.001	15.4	.002 B	0.008	4.76
SF-8 is first rinsate sample from RAM elevator																							
CAI-SF-9	1.38	0.110	0.002	.116 B	0.0001	0.013	12.8	0.307	0.009	0.34	8.07	0.062	2.04	0.465	0.0004	0.221	4.68	0.003	0.001	15.3	0.003	0.008	4.59
SF-9 is a duplicate of SF-8																							
CAI-SF-10	0.18	0.001	0.016	.026 B	0.0001	.003 B	12.3	0.018	0.002	0.007	11.2	0.03	5.84	0.081	.0002 B	0.049	2.27	0.002	0.0001	13.7	0.003	0.011	1.08
SF-10 is rinsate sample from RAM elevator																							
CAI-SF-11	0.264	.023B	.002B	.0359	.0001U	.002B	11	0.081	.001B	0.032	7.4	0.009	2.68	0.092	.0001B	0.041	2.68	0.002	0.001	13.5	.003U	.010B	0.332
SF-11 is second rinsate sample from RAM elevator																							
CAI-VNT-1	0.017	0.003	0.003	0.024	0.0001	0.0003	10.8	0.005	0.0005	0.006	0.067	0.0001	2.79	0.003	0.00002	.018 B	2.14	0.002	0.001	12.6	0.003	0.01	0.063
CAI-SH-1	0.04	0.003	0.005	0.022	0.0001	0.0003	12.3	0.006	0.0004	0.007	0.288	0.002	0.928	0.003	.00003 B	.011 B	1.9	0.002	0.001	14.9	0.003	0.012	0.071
CAI-DE-1	0.012	0.003	0.002	0.023	0.0004	0.0003	12.8	0.005	0.0004	0.006	0.065	0.006	1.28	0.002	.00003 B	.008 B	1.88	0.002	0.001	14.4	0.003	0.012	0.036
CAI-FG-1	0.013	0.003	0.006	0.018	0.0001	0.0300	10	0.004	0.0006	0.005	0.051	0.002	1.16	0.002	0.00002	.010 B	1.81	0.003	0.001	12.9	0.003	0.011	0.014
CAI-AR-10	.040B	.030U	.005B	.024B	.0001U	.0003U	11	.006B	.0004B	.006B	0.382	0.007	1.46	0.097	.00002 B	.008B	2.16	.002U	.001U	13.1	.004 B	0.011	0.108
CAI-AR-11	0.343	0.01	0.007	0.285	0.0005	0.005	15.9	0.15	0.018	0.082	1.91	0.028	7.28	0.273	0.0006	0.083	3.4	0.003	0.0012	14	0.003	0.062	0.281
CAI-AR-12	0.178	0.006	0.007	0.041	0.0004	0.001	14.3	0.064	0.002	0.029	1.33	0.064	3.45	0.063	0.00008	0.037	3.76	0.003	0.001	13.1	0.003	0.011	0.126
CAI-RH-1	0.007	0.003	.004B	.044B	.0001U	.002B	11.6	0.008	.0004U	.004B	0.377	.001U	2.84	0.023	0.0003	0.069	2.47	.002U	.001U	13.7	.003U	.009B	0.052
RH-1 is rinsate sample from rinsewater																							
CAI-HP-10	0.013	.004B	.005B	0.028	.0001U	.003B	11.7	.007B	.001B	.023B	0.562	0.048	2.04	0.033	.0002B	.034B	2.15	.002U	.001U	13	.003U	.008B	0.194
HP-10 is rinsate sample from river before HEPA bank																							
CAI-HP-11	0.491	.012B	.004B	.041B	.0004B	.0002	18.2	0.167	.005B	0.009	1.58	0.018	3.19	0.126	.0002B	0.118	2.67	0.018	.001U	18.8	.003U	0.011	0.273
HP-11 is rinsate sample from one of the HEPA banks																							
CAI-HP-12	0.458	0.0518	.004B	.046B	0.0001	0.007	14.8	1	.012B	0.13	0.18	0.021	3.36	0.199	0.0005	0.546	2.7	0.011	.001U	25.8	.0068	0.015	0.580
HP-12 IS A SAMPLE OF PRE-WASH WATER WITH ALCONOX																							
CAI-HP-14	0.206	0.004	0.003	0.037	0.0001	0.036	13.6	0.202	.004B	0.044	0.01	0.081	2.73	0.119	.0001B	0.182	2.41	.004B	.001U	14.3	.003U	0.011	0.620
HP-14 is rinsate sample from the discharge after the HEPA banks																							
CAI-ST-10	0.038	0.004	0.005	0.027	0.0004	0.001	10.8	0.008	0.001	0.003	0.176	0.008	2.29	0.002	0.00004	0.019	1.89	0.003	0.0007	12	0.003	0.01	0.046
CAI-ST-11	0.302	0.004	0.005	0.053	0.0004	0.007	13.3	0.041	0.011	0.076	1.09	0.071	2.68	0.015	0.0002	0.107	1.85	0.003	0.0007	12.2	0.003	0.02	2.07
CAI-ST-12	0.028	0.004	0.003	0.024	0.00007	0.0002	10.9	0.006	0.0007	0.0004	0.053	0.004	2.75	0.0008	0.00003	0.018	2.08	0.007	0.0007	12	.003U	0.01	0.047
CAI-ST-12 is final rinsate from tank with Hg contamination																							
CAI-PM-1	0.044	0.006	0.003	0.03	0.0002	0.001	11.3	0.048	0.008	0.008	0.14	0.004	3.3	0.004	0.0001	0.234	2.14	0.003	0.0009	11.9	0.003	0.01	0.096
CAI-PM-2	0.043	0.006	0.004	0.031	0.0001	0.001	11.8	0.012	0.002	0.006	0.069	0.002	3.47	0.002	0.00007	0.054	2.16	0.003	0.0009	12.1	0.003	0.01	0.059
CAI-PM-3	0.041	0.004	0.003	0.03	0.00007	0.008	11.5	0.012	0.003	0.02	0.073	0.003	3.42	0.002	0.00008	0.381	2.32	0.003	0.0007	12	0.003	0.01	0.063
CAI-HC-1	0.045	0.004	0.003	0.028	0.00007	0.003	12.4	0.01	0.003	0.005	0.424	0.002	3.75	0.067	0.00009	0.184	2.44	0.003	0.00007	12.5	0.003	0.028	0.51
CAI-SC-1	0.043	0.004	0.003	0.031	0.0007	0.008	11.8	0.094	0.014	0.005	0.138	0.002	3.4	0.011	0.00008	0.468	2.13	0.003	0.0007	11.9	0.003	0.009	0.04
CAI-SC-2	0.037	0.007	0.006	0.027	0.00007	0.006	11.4	0.016	0.003	0.007	0.256	0.002	3.4	0.006	0.00008	0.06	2.09	0.003	0.0007	12	0.003	0.011	0.068

BASELINE PRE-RINSE WATER SAMPLES

CAI-QT-4	0.044	0.006	0.005	0.019	0.0001	0.0003	7.64	0.005	0.0009	0.003	4.13	0.001	0.683	0.021	0.00002	0.0003	1.77	0.005	0.001	11.2	0.003	0.009	0.117
CAI-AT-4	0.110	0.003	0.003	0.019	0.0003	0.0003	10.3	0.002	0.0004	0.0006	2.93	0.001	1.44	0.002	0.00002	0.0006	1.69	0.003	0.001	12.6	0.003	0.009	0.107
CAI-DW-1	0.01	0.003	0.004	0.02	0.0003	0.0003	8.83	0.002	0.0004	0.006	0.182	0.003	1.95	0.004	0.00002	0.002	1.9	0.003	0.001	12.9	0.003	0.009	0.053
CAI-DW-2	0.01	0.003	0.002	0.02	0.0001	0.0003	8.92	0.002	0.0004	0.006	0.202	0.003	2.09	0.004	0.00002	0.002	1.87	0.002	0.001	12.9	0.003	0.009	0.064
CAI-DW-3	0.01	0.003	0.003	0.019	0.0001	0.0003	8.89	0.002	0.0004	0.007	0.209	0.003	2	0.004	0.00002	0.002	1.87	0.002	0.001	12.9	0.003	0.009	0.055
MEAN	0.038	0.0034	0.0034	0.0194	0.00010	0.0003	8.488	0.0026	0.0006	0.0053	0.5244	0.0022	1.6326	0.007	0.00002	0.00138	1.83	0.003	0.001	10.210	0.003	0.009	0.0792
STD DEV	0.046022	0.00089	0.00014	0.00055	0.00011	0	0.1089	0.00134	0.00022	0.00338	1.0776	0.00110	0.54267	0.0078	0	0.000856	0.088	0.000225	0	0.0450	0	0	0.030434

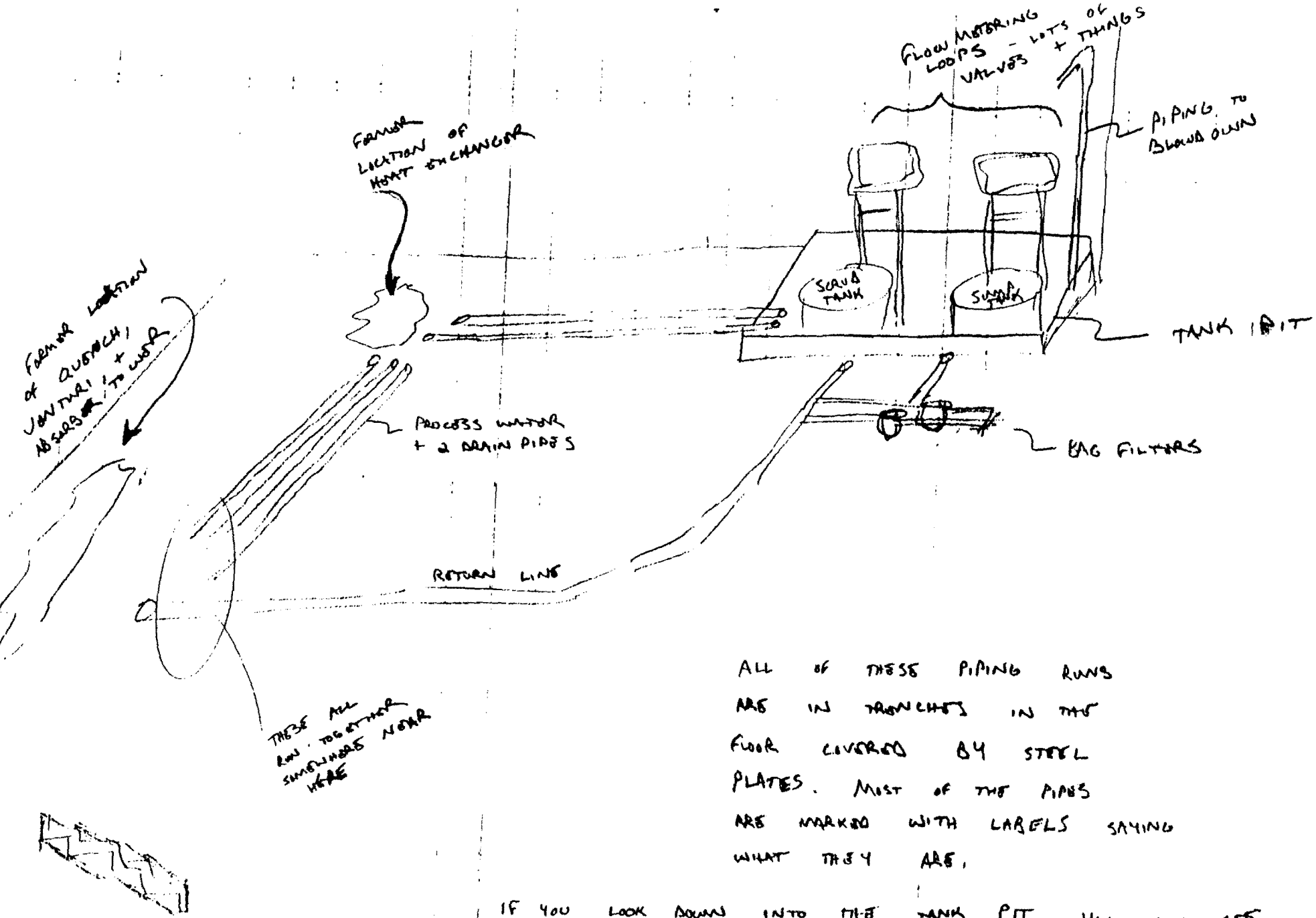

ALL OF THESE PIPING RUNS ARE IN TRENCHES IN THE FLOOR COVERED BY STEEL PLATES. MOST OF THE PIPES ARE MARKED WITH LABELS SAYING WHAT THEY ARE.

IF YOU LOOK DOWN INTO THE TANK PIT, YOU WILL SEE PUMPS AND PIPES ORIGINATING AT THE BOTTOM OF EACH TANK. THESE ARE INCLUDED IN DECON. REQUIREMENT.