EPA/625/R-96/010b

#70063

Compendium of Methods for the Determination of Toxic Organic Compounds in Ambient Air

Second Edition

Compendium Method TO-14A

Determination Of Volatile Organic Compounds (VOCs) In Ambient Air Using Specially Prepared Canisters With Subsequent Analysis By Gas Chromatography

Center for Environmental Research Information
Office of Research and Development
U.S. Environmental Protection Agency
Cincinnati, OH 45268

January 1999

JUL 25 2001

8979

Method TO-14A
Acknowledgements

This Method was prepared for publication in the *Compendium of Methods for the Determination of Toxic Organic Compounds in Ambient Air, Second Edition,* (EPA/625/R-96/010b), which was prepared under Contract No. 68-C3-0315, WA No. 3-10, by Midwest Research Institute (MRI), as a subcontractor to Eastern Research Group, Inc. (ERG), and under the sponsorship of the U.S. Environmental Protection Agency (EPA). Justice A. Manning, John O. Burckle, and Scott Hedges, Center for Environmental Research Information (CERI), and Frank F. McElroy, National Exposure Research Laboratory (NERL), all in the EPA Office of Research and Development, were responsible for overseeing the preparation of this method. Additional support was provided by other members of the Compendia Workgroup, which include:

- John O. Burckle, U.S. EPA, ORD, Cincinnati, OH
- James L. Cheney, Corps of Engineers, Omaha, NB
- Michael Davis, U.S. EPA, Region 7, KC, KS
- Joseph B. Elkins Jr., U.S. EPA, OAQPS, RTP, NC
- Robert G. Lewis, U.S. EPA, NERL, RTP, NC
- Justice A. Manning, U.S. EPA, ORD, Cincinnati, OH
- William A. McClenny, U.S. EPA, NERL, RTP, NC
- Frank F. McElroy, U.S. EPA, NERL, RTP, NC
- Heidi Schultz, ERG, Lexington, MA
- William T. "Jerry" Winberry, Jr., EnviroTech Solutions, Cary, NC

Method TO-14 was originally published in March of 1989 as one of a series of peer reviewed methods in the second supplement to *"Compendium of Methods for the Determination of Toxic Organic Compounds in Ambient Air,"* EPA 600/4-89-018. Method TO-14 has been revised and updated as Method TO-14A in this Compendium to eliminate time sensitivity material and correct a small number of errors.

Peer Reviewer

- Lauren Drees, U.S. EPA, NRMRL, Cincinnati, OH

Finally, recognition is given to Frances Beyer, Lynn Kaufman, Debbie Bond, Cathy Whitaker, and Kathy Johnson of Midwest Research Institute's Administrative Services staff whose dedication and persistence during the development of this manuscript has enabled it's production.

DISCLAIMER

This Compendium has been subjected to the Agency's peer and administrative review, and it has been approved for publication as an EPA document. Mention of trade names or commercial products does not constitute endorsement or recommendation for use.

METHOD TO-14A

Determination Of Volatile Organic Compounds (VOCs) In Ambient Air Using Specially Prepared Canisters With Subsequent Analysis By Gas Chromatography

TABLE OF CONTENTS

	Page
1. Scope	14A-1
2. Summary of Method	14A-1
3. Significance	14A-4
4. Applicable Documents	14A-5
4.1 ASTM Standards	14A-5
4.2 EPA Documents	14A-5
4.3 Other Documents	14A-6
5. Definitions	14A-6
6. Interferences and Limitations	14A-7
7. Apparatus	14A-7
7.1 Sample Collection	14A-7
7.2 Sample Analysis	14A-9
7.3 Canister Cleaning System	14A-11
7.4 Calibration System and Manifold	14A-11
8. Reagents and Materials	14A-11
8.1 Gas Cylinders of Helium, Hydrogen, Nitrogen, and Zero Air	14A-11
8.2 Gas Calibration Standards	14A-11
8.3 Cryogen	14A-12
8.4 Gas Purifiers	14A-12
8.5 Deionized Water	14A-12
8.6 4-Bromofluorobenzene	14A-12
8.7 Hexane	14A-12
8.8 Methanol	14A-12
9. Sampling System	14A-12
9.1 System Description	14A-12
9.1.1 Subatmospheric Pressure Sampling	14A-12
9.1.2 Pressurized Sampling	14A-13
9.1.3 All Samplers	14A-13
9.2 Sampling Procedure	14A-14

TABLE OF CONTENTS (continued)

	Page
10. Analytical System	14A-15
10.1 System Description	14A-16
10.2 GC/MS/SCAN/SIM System Performance Criteria	14A-19
10.3 GC/FID/ECD System Performance Criteria (With Optional PID System)	14A-20
10.4 Analytical Procedures	14A-22
11. Cleaning and Certification Program	14A-25
11.1 Canister Cleaning and Certification	14A-25
11.2 Sampling System Cleaning and Certification	14A-26
12. Performance Criteria and Quality Assurance	14A-27
12.1 Standard Operating Procedures (SOPs)	14A-27
12.2 Method Relative Accuracy and Linearity	14A-27
12.3 Method Modification	14A-28
12.4 Method Safety	14A-29
12.5 Quality Assurance	14A-29
13. Acknowledgements	14A-30
14. References	14A-32

APPENDIX A. Availability of VOC Standards From U. S. Environmental Protection Agency (USEPA)
APPENDIX B. Operating Procedures for a Portable Gas Chromatograph Equipped with a Photoionization Detector
APPENDIX C. Installation and Operating Procedures for Alternative Air Toxics Samplers

METHOD TO-14A

Determination Of Volatile Organic Compounds (VOCs) In Ambient Air Using Specially Prepared Canisters With Subsequent Analysis By Gas Chromatography

1. Scope

1.1 This document describes a procedure for sampling and analysis of volatile organic compounds (VOCs) in ambient air. The method was originally based on collection of whole air samples in SUMMA® passivated stainless steel canisters, but has now been generalized to other specially prepared canisters (see Section 7.1.1.2). The VOCs are separated by gas chromatography and measured by a mass spectrometer or by multidetector techniques. This method presents procedures for sampling into canisters to final pressures both above and below atmospheric pressure (respectively referred to as pressurized and subatmospheric pressure sampling).

1.2 This method is applicable to specific VOCs that have been tested and determined to be stable when stored in pressurized and sub-atmospheric pressure canisters. Numerous compounds, many of which are chlorinated VOCs, have been successfully tested for storage stability in pressurized canisters (1-3). However, minimal documentation is currently available demonstrating stability of VOCs in subatmospheric pressure canisters.

1.3 The Compendium Method TO-14A target list is shown in Table 1. These compounds have been successfully stored in canisters and measured at the parts per billion by volume (ppbv) level. This method applies under most conditions encountered in sampling of ambient air into canisters. However, the composition of a gas mixture in a canister, under unique or unusual conditions, will change so that the sample is known not to be a true representation of the ambient air from which it was taken. For example, low humidity conditions in the sample may lead to losses of certain VOCs on the canister walls, losses that would not happen if the humidity were higher. If the canister is pressurized, then condensation of water from high humidity samples may cause fractional losses of water-soluble compounds. Since the canister surface area is limited, all gases are in competition for the available active sites. Hence an absolute storage stability cannot be assigned to a specific gas. Fortunately, under conditions of normal usage for sampling ambient air, most VOCs can be recovered from canisters near their original concentrations after storage times of up to thirty days.

2. Summary of Method

2.1 Both subatmospheric pressure and pressurized sampling modes typically use an initially evacuated canister and pump-ventilated sample line during sample collection. Pressurized sampling requires an additional pump to provide positive pressure to the sample canister. A sample of ambient air is drawn through a sampling train comprised of components that regulate the rate and duration of sampling into a pre-evacuated specially prepared passivated canister.

2.2 After the air sample is collected, the canister valve is closed, an identification tag is attached to the canister, a chain-of-custody (COC) form completed, and the canister is transported to a predetermined laboratory for analysis.

2.3 Upon receipt at the laboratory, the canister tag data is recorded, the COC completed, and the canister is attached to the analytical system. During analysis, water vapor is reduced in the gas stream by a Nafion® dryer (if applicable), and the VOCs are then concentrated by collection in a cryogenically-cooled trap. The cryogen is then removed and the temperature of the trap is raised. The VOCs originally collected in the trap are

revolatilized, separated on a GC column, then detected by one or more detectors for identification and quantitation.

2.4 The analytical strategy for Compendium Method TO-14A involves using a high-resolution gas chromatograph (GC) coupled to one or more appropriate GC detectors. Historically, detectors for a GC have been divided into two groups: non-specific detectors and specific detectors. The non-specific detectors include, but are not limited to, the nitrogen-phosphorus detector (NPD), the flame ionization detector (FID), the electron capture detector (ECD) and the photo-ionization detector (PID). The specific detectors include the linear quadrupole mass spectrometer (MS) operating in either the select ion monitoring (SIM) mode or the SCAN mode, or the ion trap detector (see Compendium Method TO-15). The use of these detectors or a combination of these detectors as part of the analytical scheme is determined by the required specificity and sensitivity of the application. While the non-specific detectors are less expensive per analysis and in some cases far more sensitive than the specific detectors, they vary in specificity and sensitivity for a specific class of compounds. For instance, if multiple halogenated compounds are targeted, an ECD is usually chosen; if only compounds containing nitrogen or phosphorus are of interest, a NPD can be used; or, if a variety of hydrocarbon compounds are sought, the broad response of the FID or PID is appropriate. In each of these cases, however, the specific identification of the compound within the class is determined only by its retention time, which can be subject to shifts or to interference from other non-targeted compounds. When misidentification occurs, the error is generally a result of a cluttered chromatogram, making peak assignment difficult. In particular, the more volatile organics (chloroethanes, ethyltoluenes, dichlorobenzenes, and various freons) exhibit less well defined chromatographic peaks, leading to possible misidentification when using nonspecific detectors. Quantitative comparisons indicate that the FID is more subject to error than the ECD because the ECD is a much more selective detector and exhibits a stronger response. Identification errors, however, can be reduced by: (a) employing simultaneous detection by different detectors or (b) correlating retention times from different GC columns for confirmation. In either case, interferences on the non-specific detectors can still cause error in identifying compounds of a complex sample. The non-specific detector system (GC/NPD/FID/ECD/PID), however, has been used for approximate quantitation of relatively clean samples. The non-specific detector system can provide a "snapshot" of the constituents in the sample, allowing determination of:

- Extent of misidentification due to overlapping peaks.
- Determination of whether VOCs are within or not within concentration range, thus requiring further analysis by specific detectors (GC/MS/SCAN/SIM) (i.e., if too concentrated, the sample is further diluted).
- Provide data as to the existence of unexpected peaks which require identification by specific detectors.

On the other hand, the use of specific detectors (MS coupled to a GC) allows positive compound identification, thus lending itself to more specificity than the multidetector GC. Operating in the SIM mode, the MS can readily approach the same sensitivity as the multidetector system, but its flexibility is limited. For SIM operation the MS is programmed to acquire data for a limited number of targeted compounds. In the SCAN mode, however, the MS becomes a universal detector, often detecting compounds which are not detected by the multidetector approach. The GS/MS/SCAN will provide positive identification, while the GC/MS/SIM procedure provides quantitation of a restricted list of VOCs, on a preselected target compound list (TCL).

If the MS is based upon a standard ion trap design, only a scanning mode is used (note however, that the Select Ion Storage (SIS) mode of the ion trap has features of the SIM mode). See Compendium Method TO-15 for further explanation and applicability of the ion-trap to the analysis of VOCs from specially prepared canisters.

The analyst often must decide whether to use specific or non-specific detectors by considering such factors as project objectives, desired detection limits, equipment availability, cost and personnel capability in developing an analytic strategy. A list of some of the advantages and disadvantages associated with non-specific and specific detectors may assist the analyst in the decision-making process.

Non-specific Multidetector Analytical System

Advantages

! Somewhat lower equipment cost than GC/MS
! Less sample volume required for analysis
! More sensitive
  - ECD may be 1000 times more sensitive than GC/MS

Disadvantages

! Multiple detectors to calibrate
! Compound identification not positive
! Lengthy data interpretation (1 hour each for analysis and data reduction)
! Interference(s) from co-eluting compound(s)
! Cannot identify unknown compounds
  - outside range of calibration
  - without standards
! Does not differentiate targeted compounds from interfering compounds

Specific Detector Analytical System

GC/MS/SIM

Advantages

! positive compound identification
! greater sensitivity than GC/MS/SCAN
! less operator interpretation than for multidetector GC
! can resolve co-eluting peaks
! more specific than the multidetector GC

Disadvantages

! cannot identify nonspecified compounds (ions)
! somewhat greater equipment cost than multidetector GC
! greater sample volume required than for multidetector GC
! universality of detector sacrified to achieve enhancement in sensitivity

GC/MS/SCAN

! positive compound identification
! can identify all compounds
! less operator interpretation
! can resolve co-eluting peaks

! lower sensitivity than GC/MS/SIM
! greater sample volume required than for multidetector GC
! somewhat greater equipment cost than multidetector GC

The analytical finish for the measurement chosen by the analyst should provide a definitive identification and a precise quantitation of volatile organics. In a large part, the actual approach to these two objectives is subject to equipment availability. Figure 1 indicates some of the favorite options that are used in Compendium Method TO-14A. The GC/MS/SCAN option uses a capillary column GC coupled to a MS operated in a scanning mode and supported by spectral library search routines. This option offers the nearest approximation to

unambiguous identification and covers a wide range of compounds as defined by the completeness of the spectral library. GC/MS/SIM mode is limited to a set of target compounds which are user defined and is more sensitive than GC/MS/SCAN by virtue of the longer dwell times at the restricted number of m/z values. Both these techniques, but especially the GC/MS/SIM option, can use a supplemental general nonspecific detector to verify/identify the presence of VOCs. Finally the option labelled GC-multidetector system uses a combination of retention time and multiple general detector verification to identify compounds. However, interference due to nearly identical retention times can affect system quantitation when using this option.

Due to low concentrations of toxic VOCs encountered in urban air (typically less than 25 ppbv and the majority below 10 ppbv) along with their complicated chromatographs, Compendium Method TO-14A strongly recommends the specific detectors (GC/MS/SCAN/SIM) for positive identification and for primary quantitation to ensure that high-quality ambient data is acquired.

For the experienced analyst whose analytical system is limited to the non-specific detectors, Section 10.3 does provide guidelines and example chromatograms showing typical retention times and calibration response factors, and utilizing the nonspecific detectors (GC/FID/ECD/PID) analytical system as the primary quantitative technique.

Compendium Method TO-15 is now available as a guidance document containing additional advice on the monitoring of VOCs. Method TO-15 contains information on alternative water management systems, has a more complete quality control section, shows performance criteria that any monitoring technique must achieve for acceptance, and provides guidance specifically directed at compound identification by mass spectrometry.

3. Significance

3.1 The availability of reliable, accurate and precise monitoring methods for toxic VOCs is a primary need for state and local agencies addressing daily monitoring requirements related to odor complaints, fugitive emissions, and trend monitoring. VOCs enter the atmosphere from a variety of sources, including petroleum refineries, synthetic organic chemical plants, natural gas processing plants, biogenic sources, and automobile exhaust. Many of these VOCs are toxic so that their determination in ambient air is necessary to assess human health impacts.

3.2 The canister-based monitoring method for VOCs has proven to be a viable and widely used approach that is based on research and evaluation performed since the early 1980s. This activity has involved the testing of sample stability of VOCs in canisters and the design of time-integrative samplers, the development of procedures for analysis of samples in canisters, including the procedure for VOC preconcentration from whole air, the treatment of water vapor in the sample, and the selection of an appropriate analytical finish has been accomplished. The canister-based method was initially summarized by EPA as Method TO-14 in the First Supplement to the *Compendium of Methods for the Determination of Toxic Organic Compounds in Ambient Air*. The present document updates the original Compendium Method TO-14 with correction of time-sensitive information and other minor changes as deemed appropriate.

3.3 The canister-based method is now a widely used alternative to the solid sorbent-based methods. The method has sub-ppbv detection limits for samples of typically 300-500 mL of whole air and duplicate and replicate precisions under 20 percent as determined in field tests. Audit bias values average within the range of ±10 percent. These performance parameters are generally adequate for monitoring at the 10^{-5} lifetime exposure risk levels for many VOCs.

3.4 Collection of ambient air samples in canisters provides a number of advantages: (1) convenient integration of ambient samples over a specific time period (e.g., 24 hours); (2) remote sampling and central analysis; (3) ease of storing and shipping samples; (4) unattended sample collection; (5) analysis of samples from multiple sites with one analytical system; (6) collection of sufficient sample volume to allow assessment of measurement precision and/or analysis of samples by several analytical systems; and (7) storage stability for many VOCs over periods of up to 30 days. To realize these advantages, care must be exercised in selection, cleaning, and handling sample canisters and sampling apparatus to avoid losses or contamination.

3.5 Interior surfaces of canisters are treated by any of a number of passivation processes, one of which is SUMMA polishing as identified in the original Compendium Method TO-14. Other specially prepared canisters are also available (see Section 7.1.1.2).

3.6 The canister-based method for monitoring VOCs is the alternative to the solid sorbent-based method described in conventional methods such as the Compendium Methods TO-1 and TO-2, and in the new Compendium Method TO-17 that describes the use multisorbent packings including the use of new carbon-based sorbents. It also is an alternative to on-site analysis in those cases where integrity of samples during storage and transport has been established.

4. Applicable Documents

4.1 ASTM Standards

- Method D1356 *Definition of Terms Relating to Atmospheric Sampling and Analysis*
- Method E260 *Recommended Practice for General Gas Chromatography*
- Method E355 *Practice for Gas Chromatography Terms and Relationships*
- Method D31357 *Practice for Planning and Sampling of Ambient Atmospheres*
- Method D5466-93 *Determination of Volatile Organic Chemicals in Atmospheres (Canister Sampling Methodology)*

4.2 EPA Documents

- *Technical Assistance Document for Sampling and Analysis Toxic Organic Compounds in Ambient Air*, U. S. Environmental Protection Agency, EPA-600/4-83-027, June 1983.
- *Quality Assurance Handbook for Air Pollution Measurement Systems*, U. S. Environmental Protection Agency, EPA-600/R-94-038b, May 1994.
- *Compendium of Methods for the Determination of Toxic Organic Compounds in Ambient Air: Method TO-14, Second Supplement*, U. S. Environmental Protection Agency, EPA 600/4-89-018, March 1989.
- *Compendium of Methods for the Determination of Toxic Organic Compounds in Ambient Air: Method TO-15, Second Edition*, U. S. Environmental Protection Agency, EPA 625/R-96-010b, January 1997.
- *Compendium of Methods for the Determination of Toxic Organic Compounds in Ambient Air, First Supplement*, U. S. Environmental Protection Agency, Research Triangle Park, NC, EPA-600/4-87-006, September 1997.
- *Compendium of Methods for the Determination of Toxic Organic Compounds in Ambient Air: Method TO-1*, U. S. Environmental Protection Agency, Research Triangle Park, NC, EPA-600/4-84-041, 1986.

4.3 Other Documents

- U. S. Environmental Protection Agency Technical Assistance Document (3).
- Laboratory and Ambient Air Studies (4-17).

5. Definitions

[Note: Definitions used in this document and any user-prepared Standard Operating Procedures (SOPSs) should be consistent with those used in ASTM D1356. All abbreviations and symbols are defined within this document at the point of first use.]

5.1 **Absolute Canister Pressure** (Pg+Pa)—gauge pressure in the canister (kPa, psi) and Pa = barometric pressure (see Section 5.2).

5.2 **Absolute Pressure**—pressure measured with reference to absolute zero pressure (as opposed to atmospheric pressure), usually expressed as kPa, mm Hg or psia.

5.3 **Cryogen**—a refrigerant used to obtain very low temperatures in the cryogenic trap of the analytical system. A typical cryogen is liquid nitrogen (bp −195.8°C) or liquid argon (bp −185.7°C).

5.4 **Dynamic Calibration**—calibration of an analytical system using calibration gas standard concentrations in a form identical or very similar to the samples to be analyzed and by introducing such standards into the inlet of the sampling or analytical system in a manner very similar to the normal sampling or analytical process.

5.5 **Gauge Pressure**—pressure measured above ambient atmospheric pressure (as opposed to absolute pressure). Zero gauge pressure is equal to ambient atmospheric (barometric) pressure.

5.6 **MS/SCAN**—the GC is coupled to a MS programmed in the SCAN mode to scan all ions repeatedly during the GC run. As used in the current context, this procedure serves as a qualitative identification and characterization of the sample.

5.7 **MS/SIM**—the GC is coupled to a MS programmed to acquire data for only specified ions and to disregard all others. This is performed using SIM coupled to retention time discriminators. The GC/SIM analysis provides quantitative results for selected constituents of the sample gas as programmed by the user.

5.8 **Megabore® Column**—chromatographic column having an internal diameter (I.D.) greater than 0.50-mm. The Megabore® column is a trademark of the J&W Scientific Co. For purposes of this method, Megabore® refers to chromatographic columns with 0.53-mm I.D.

5.9 **Pressurized Sampling**—collection of an air sample in a canister with a (final) canister pressure above atmospheric pressure, using a sample pump.

5.10 **Qualitative Accuracy**—the ability of an analytical system to correctly identify compounds.

5.11 **Quantitative Accuracy**—the ability of an analytical system to correctly measure the concentration of an identified compound.

5.12 Static Calibration—calibration of an analytical system using standards in a form different from the samples to be analyzed. An example of a static calibration would be injecting a small volume of a high concentration standard directly onto a GC column, bypassing the sample extraction and preconcentration portion of the analytical system.

5.13 Subatmospheric Sampling—collection of an air sample in an evacuated canister at a (final) canister pressure below atmospheric pressure, without the assistance of a sampling pump. The canister is filled as the internal canister pressure increases to ambient or near ambient pressure. An auxiliary vacuum pump may be used as part of the sampling system to flush the inlet tubing prior to or during sample collection.

6. Interferences and Limitations

6.1 Interferences can occur in sample analysis if moisture accumulates in the dryer (see Section 10.1.1.2). An automated cleanup procedure that periodically heats the dryer to about 100°C while purging with zero air eliminates any moisture buildup. This procedure does not degrade sample integrity for Compendium Method TO-14A target compound list (TCL) but can affect some organic compounds.

6.2 Contamination may occur in the sampling system if canisters are not properly cleaned before use. Additionally, all other sampling equipment (e.g., pump and flow controllers) should be thoroughly cleaned to ensure that the filling apparatus will not contaminate samples. Instructions for cleaning the canisters and certifying the field sampling system are described in Sections 11.1 and 11.2, respectively.

6.3 The Compendium Method TO-14A analytical system employs a Nafion® permeable membrane dryer to remove water vapor from the sample stream. Polar organic compounds permeate this membrane in a manner similar to water vapor and rearrangements can occur in some hydrocarbons due to the acid nature of the dryer. Compendium Method TO-15 provides guidance associated with alternative water management systems applicable to the analysis of a large group of VOCs in specially-treated canisters.

7. Apparatus

[Note: Equipment manufacturers identified in this section were originally published in Compendium Method TO-14 as possible sources of equipment. They are repeated in Compendium Method TO-14A as reference only. Other manufacturers' equipment should work as well, as long as the equipment is equivalent. Modifications to these procedures may be necessary if using other manufacturers' equipment.]

7.1 Sample Collection

[Note: Subatmospheric pressure and pressurized canister sampling systems are commercially available and have been used as part of U.S. Environmental Protection Agency's Toxic Air Monitoring Stations (TAMS), Urban Air Toxic Monitoring Program (UATMP), the non-methane organic compound (NMOC) Sampling and Analysis Program, and in the Photochemical Assessment Monitoring Stations (PAMS).]

7.1.1 Subatmospheric Pressure (see Figure 2 Without Metal Bellows Type Pump).

7.1.1.1 Sampling Inlet Line. Stainless steel tubing to connect the sampler to the sample inlet.

7.1.1.2 **Specially-Treated Sample Canister.** Leak-free stainless steel pressure vessels of desired volume (e.g., 6 L), with valve and passivated interior surfaces. Major manufacturers and re-suppliers are:

- BRC/Ramussen
  17010 NW Skyline Blvd.
  Portland, OR 97321
- Meriter
  1790 Potrero Drive
  San Jose, CA 95124
- Restec Corporation
  110 Benner Circle
  Bellefonte, PA 16823-8812
- XonTech Inc.
  6862 Hayenhurst Avenue
  Van Nuys, CA 91406
- Scientific Instrumentation Specialists
  P.O. Box 8941
  Moscow, ID 83843
- Graseby
  500 Technology Ct.
  Smyrna, GA 30832

7.1.1.3 *Stainless Steel Vacuum/Pressure Gauge. Capable of measuring* vacuum (–100 to 0 kPa or 0 to 30 in. Hg) and pressure (0–206 kPa or 0–30 psig) in the sampling system, Matheson, P.O. Box 136, Morrow, GA 30200, Model 63-3704, or equivalent. Gauges should be tested clean and leak tight.

7.1.1.4 **Electronic Mass Flow Controller.** Capable of maintaining a constant flow rate (± 10%) over a sampling period of up to 24 hours and under conditions of changing temperature (20–40°C) and humidity, Tylan Corp., 19220 S. Normandie Ave., Torrance, CA 90502, Model FC-260, or equivalent.

7.1.1.5 **Particulate Matter Filter.** 2-µm sintered stainless steel in-line filter, Nupro Co., 4800 E. 345th St., Willoughby, OH 44094, Model SS-2F-K4-2, or equivalent.

7.1.1.6 **Electronic Timer.** For unattended sample collection, Paragon Elect. Co., 606 Parkway Blvd., P.O. Box 28, Twin Rivers, WI 54201, Model 7008-00, or equivalent.

7.1.1.7 **Solenoid Valve.** Electrically-operated, bi-stable solenoid valve, Skinner Magnelatch Valve, New Britain, CT, Model V5RAM49710, with Viton® seat and o-rings. A Skinner Magnelatch valve is used for purposes of illustration only in Figures 2 and 3.

7.1.1.8 **Chromatographic Grade Stainless Steel Tubing and Fittings.** For interconnections, Alltech Associates, 2051 Waukegan Rd., Deerfield, IL 60015, Cat. #8125, or equivalent. All such materials in contact with sample, analyte, and support gases prior to analysis should be chromatographic grade stainless steel.

7.1.1.9 **Thermostatically Controlled Heater.** To maintain temperature inside insulated sampler enclosure above ambient temperature, Watlow Co., Pfafftown, NC, Part 04010080, or equivalent.

7.1.1.10 **Heater Thermostat.** Automatically regulates heater temperature, Elmwood Sensors, Inc., 500 Narragansett Park Dr., Pawtucket, RI 02861, Model 3455-RC-0100-0222, or equivalent.

7.1.1.11 **Fan.** For cooling sample system, EG&G Rotron, Woodstock, NY, Model SUZAI, or equivalent.

7.1.1.12 **Fan Thermostat.** Automatically regulates fan operation, Elmwood Sensors, Inc., Pawtucket, RI, Model 3455-RC-0100-0244, or equivalent.

7.1.1.13 **Maximum-Minimum Thermometer.** Records highest and lowest temperatures during sampling period, Thomas Scientific, Brooklyn Thermometer Co., Inc., P/N 9327H30, or equivalent.

7.1.1.14 **Stainless Steel Shut-Off Valve.** Leak free, for vacuum/pressure gauge.

7.1.1.15 **Auxiliary Vacuum Pump.** Continuously draws ambient air through the inlet manifold at 10 L/min. or higher flow rate. Sample is extracted from the manifold at a lower rate, and excess air is exhausted.

[Note: The use of higher inlet flow rates dilutes any contamination present in the inlet and reduces the possibility of sample contamination as a result of contact with active adsorption sites on inlet walls.]

7.1.1.16 **Elapsed Time Meter.** Measures duration of sampling, Conrac, Cramer Div., Old Saybrook, CT, Type 6364, P/N 10082, or equivalent.

7.1.1.17 **Optional Fixed Orifice, Capillary, or Adjustable Micrometering Valve.** May be used in lieu of the electronic flow controller for grab samples or short duration time-integrated samples. Usually appropriate only in situations where screening samples are taken to assess future sampling activity.

7.1.2 **Pressurized (see Figure 2 With Metal Bellows Type Pump and Figure 3).**

7.1.2.1 **Sample Pump.** Stainless steel, metal bellows type, Metal Bellows Corp., 1075 Providence Highway, Sharon, MA 02067, Model MB-151, or equivalent, capable of 2 atmospheres output pressure. Pump must be free of leaks, clean, and uncontaminated by oil or organic compounds.

[Note: An alternative sampling system has been developed by Dr. R. Rasmussen, The Oregon Graduate Institute of Science and Technology, 20000 N.W. Walker Rd., Beaverton, Oregon 97006, 503-690-1077, (17,18) and is illustrated in Figure 3. This flow system uses, in order, a pump, a mechanical flow regulator, and a mechanical compensation flow restrictive device. In this configuration the pump is purged with a large sample flow, thereby eliminating the need for an auxiliary vacuum pump to flush the sample inlet. Interferences using this configuration have been minimal.]

7.1.2.2 **Other Supporting Materials.** All other components of the pressurized sampling system (see Figure 2 with metal bellows type pump and Figure 3) are similar to components discussed in Sections 7.1.1.1 through 7.1.1.16.

7.2 Sample Analysis

7.2.1 **GC/MS/SCAN Analytical System (see Figure 4).**

7.2.1.1 **Gas Chromatograph.** Capable of subambient temperature programming for the oven, with other generally standard features such as gas flow regulators, automatic control of valves and integrator, etc. Flame ionization detector optional, Hewlett Packard, Rt. 41, Avondale, PA 19311, Model 5880A, with oven temperature control and Level 4 BASIC programming, or equivalent. The GS/MS/SCAN analytical system must be capable of acquiring and processing data in the MS/SCAN mode.

7.2.1.2 **Chromatographic Detector.** Mass-selective detector, Hewlett Packard, 3000-T Hanover St., 9B, Palo Alto, CA 94304, Model HP-5970 MS, or equivalent, equipped with computer and appropriate software, Hewlett Packard, 3000-T Hanover St., 9B, Palo Alto, CA 94304, HP-216 Computer, Quicksilver MS software, Pascal 3.0, mass storage 9133 HP Winchester with 3.5 inch floppy disk, or equivalent. The GC/MS is set in the SCAN mode, where the MS screens the sample for identification and quantitation of VOC species.

7.2.1.3 **Cryogenic Trap with Temperature Control Assembly.** Refer to Section 10.1.1.3 for complete description of trap and temperature control assembly, Graseby, 500 Technology Ct., Smyrna, GA 30082) Model 320-01, or equivalent.

7.2.1.4 **Electronic Mass Flow Controllers (3).** Maintain constant flow (for carrier gas and sample gas) and to provide analog output to monitor flow anomalies, Tylan Model 260, 0–100 mL/min, or equivalent.

7.2.1.5 **Vacuum Pump.** General purpose laboratory pump, capable of drawing the desired sample volume through the cryogenic trap, Thomas Industries, Inc., Sheboygan, WI, Model 107BA20, or equivalent.

7.2.1.6 **Chromatographic Grade Stainless Steel Tubing and Stainless Steel Plumbing Fittings.** Refer to Section 7.1.1.8 for description.

7.2.1.7 **Chromatographic Column.** To provide compound separation such as shown in Table 5. Hewlett Packard, Rt. 41, Avondale, PA 19311. Typical GC column for this application is OV-1 capillary column, 0.32-mm x 50 m with 0.88-μm crosslinked methyl silicone coating, or equivalent.

7.2.1.8 **Stainless Steel Vacuum/Pressure Gauge (Optional).** Capable of measuring vacuum (-101.3 to 0 kPa) and pressure (0-206 kPa) in the sampling system, Matheson, P.O. Box 136, Morrow, GA 30200, Model 63-3704, or equivalent. Gauges should be tested clean and tight.

7.2.1.9 **Stainless Steel Cylinder Pressure Regulators.** Standard, two-stage cylinder pressure gauges for helium, zero air and hydrogen gas cylinders.

7.2.1.10 **Gas Purifiers (3).** Used to remove organic impurities and moisture from gas streams, Hewlett Packard, Rt. 41, Avondale, PA 19311, P/N 19362 - 60500, or equivalent.

7.2.1.11 **Low Dead-Volume Tee (optional).** Used to split the exit flow from the GC column, Alltech Associates, 2051 Waukegan Rd., Deerfield, IL 60015, Cat. #5839, or equivalent.

7.2.1.12 **Nafion® Dryer.** Consisting of Nafion tubing coaxially mounted within larger tubing, Perma Pure Products, 8 Executive Drive, Toms River, NJ 08753, Model MD-125-48, or equivalent. Refer to Section 10.1.1.2 for description.

7.2.1.13 **Six-Port Gas Cromatographic Valve.** Seismograph Service Corp., Tulsa, OK, Seiscor Model VIII, or equivalent.

7.2.1.14 **Chart Recorder (optional).** Compatible with the detector output signal to record optional FID detector response to the sample.

7.2.1.15 **Electronic Integrator (optional).** Compatible with the detector output signal of the FID and capable of integrating the area of one or more response peaks and calculating peak areas corrected for baseline drift.

7.2.2 **GC/MS/SIM Analytical System (see Figure 4).**

7.2.2.1 The GC/MS/SIM analytical system must be capable of acquiring and processing data in the MS-SIM mode.

7.2.2.2 All components of the GC/MS/SIM system are identical to Sections 7.2.1.1 through 7.2.1.15.

7.2.3 **GC-Multidetector Analytical System (see Figure 5 and Figure 6).**

7.2.3.1 **Gas Chromatograph with Flame Ionization and Electron Capture Detectors (Photoionization Detector Optional).** Capable of sub-ambient temperature programming for the oven and simultaneous operation of all detectors, and with other generally standard features such as gas flow regulators, automatic control of valves and integrator, etc., Hewlett Packard, Rt. 41, Avondale, PA 19311, Model 5990A, with oven temperature control and Level 4 BASIC programming, or equivalent.

7.2.3.2 **Chart Recorders.** Compatible with the detector output signals to record detector response tot he sample.

7.2.3.3 **Electronic Integrator.** Compatible with the detector output signals and capable of integrating the area of one or more response peaks and calculating peak areas corrected for baseline drift.

7.2.3.4 **Six-Port Gas Chromatographic Valve.** See Section 7.2.1.13.

7.2.3.5 **Cryogenic Trap with Temperature Control Assembly.** Refer to Section 10.1.1.3 for complete description of trap and temperature control assembly, Graseby, 500 Technology Ct., Smyrna, GA 30082, Model 320-01, or equivalent.

7.2.3.6 **Electronic Mass Flow Controllers (3).** Maintain constant flow (for carrier gas, nitrogen make-up gas and sample gas) and to provide analog output to monitor flow anomalies, Tylan Model 260, 0–100 mL/min, or equivalent.

7.2.3.7 **Vacuum Pump.** General purpose laboratory pump, capable of drawing the desired sample volume through the cryogenic trap (see Section 7.2.1.6 for source and description).

7.2.3.8 **Chromatographic Grade Stainless Steel Tubing and Stainless Steel Plumbing Fittings.** Refer to Section 7.1.1.8 for description.

7.2.3.9 **Chromatographic Column.** To provide compound separation such as shown in Table 7, Hewlett Packard, Rt. 41, Avondale, PA 19311. Typical GC column for this application is OV-1 capillary column, 0.32 mm x 50 m with 0.88 um crosslinked methyl silicone coating, or equivalent.

[Note: Other columns (e.g., DB-624) can be used as long as the system meets user needs. The Wider Megabore® column (i.e., 0.53-mm I.D.) is less susceptible to plugging as a result of trapped water, thus eliminating the need for Nafion® dryer in the analytical system. The Megabore® column has sample capacity approaching that of a packed column, while retaining much of the peak resolution traits of narrower columns (i.e., 0.32-mm I.D.).]

7.2.3.10 **Vacuum/Pressure Gauges (3).** Refer to Section 7.2.1.9 for description.

7.2.3.11 **Cylinder Pressure Stainless Steel Regulators.** Standard, two-stage cylinder regulators with pressure gauges for helium, zero air, nitrogen, and hydrogen gas cylinders.

7.2.3.12 **Gas Purifiers (4).** Used to remove organic impurities and moisture from gas streams, Hewlett Packard, Rt. 41, Avondale, PA 19311, P/N 19362 - 60500, or equivalent.

7.2.3.13 **Low Dead-Volume Tee.** Used to split (50/50) the exit flow from the GC column, Alltech Associates, 2051 Waukegan Rd., Deerfield, IL 60015, Cat. #5839, or equivalent.

7.3 **Canister Cleaning System (see Figure 7)**

7.3.1 **Vacuum Pump.** Capable of evacuating sample canister(s) to an absolute pressure of <0.05 mm Hg.

7.3.2 **Manifold.** Stainless steel manifold with connections for simultaneously cleaning several canisters.

7.3.3 **Shut-off Valve(s).** Seven (7) on-off toggle valves.

7.3.4 **Stainless Steel Vacuum Gauge.** Capable of measuring vacuum in the manifold to an absolute pressure of 0.05 mm Hg or less.

7.3.5 **Cryogenic Trap (2 required).** Stainless steel U-shaped open tubular trap cooled with liquid oxygen or argon to prevent contamination from back diffusion of oil from vacuum pump and to provide clean, zero air to sample canister(s).

7.3.6 **Stainless Steel Pressure Gauges (2).** 0-345 kPa (0-50 psig) to monitor zero air pressure.

7.3.7 **Stainless Steel Flow Control Valve.** To regulate flow of zero air into canister(s).

7.3.8 **Humidifier.** Pressurizable water bubbler containing high performance liquid chromatography (HPLC) grade deionized water or other system capable of providing moisture to the zero air supply.

7.3.9 **Isothermal Oven (optional).** For heating canisters, Fisher Scientific, Pittsburgh, PA, Model 349, or equivalent.

7.4 **Calibration System and Manifold (see Figure 8)**

7.4.1 **Calibration Manifold.** Glass manifold, (1.25-cm I.D. x 66-cm) with sampling ports and internal baffles for flow disturbance to ensure proper mixing.

7.4.2 **Humidifier.** 500-mL impinger flask containing HPLC grade deionized water.

7.4.3 **Electronic Mass Flow Controllers.** One 0 to 5 L/min and one 0 to 50 mL/min, Tylan Corporation, 23301-TS Wilmington Ave., Carson, CA 90745, Model 2160, or equivalent.

7.4.4 **Teflon® Filter(s).** 47-mm Teflon® filter for particulate control, best source.

8. Reagents and Materials

8.1 **Gas Cylinders of Helium, Hydrogen, Nitrogen, and Zero Air.** Ultrahigh purity grade, best source.

8.2 **Gas Calibration Standards.** Cylinder(s) containing approximately 10 ppmv of each of the following compounds of interest:

vinyl chloride
vinylidene chloride
1,1,2-trichloro-1,2,2-trifluoroethane
chloroform
1,2-dichloroethane
benzene

toluene
Freon 12
methyl chloride
1,2-dichloro-1,1,2,2-tetrafluoroethane
methyl bromide
ethyl chloride
Freon 11
dichloromethane
1,1-dicholoroethane
cis-1,2-dicholoroethylene
1,2-dichloropropane
1,1,2-trichloroethane
1,2-dibromoethane
tetrachloroethylene
chlorobenzene
benzyl chloride
hexachloro-1,3-butadiene

methyl chloroform
carbon tetrachloride
trichloroethylene
cis-1,3-dichloropropene
trans-1,3-dichloropropene
ethylbenzene
o-xylene
m-xylene
p-xylene
styrene
1,1,2,2-tetrachloroethane
1,3,5-trimethylbenzene
1,2,4-trimethylbenzene
m-dichlorobenzene
o-dichlorobenzene
p-dichlorobenzene
1,2,4-trichlorobenzene

The cylinder should be traceable to a National Institute of Standards and Technology (NIST) Standard Reference Material (SRM). The components may be purchased in one cylinder or may be separated into different cylinders. Refer to manufacturer's specification for guidance on purchasing and mixing VOCs in gas cylinders. Those compounds purchased should match one's own TCL.

8.3 **Cryogen.** Liquid nitrogen (bp −195.8°C) or liquid argon (bp −185.7°C), best source.

8.4 **Gas Purifiers.** Connected in-line between hydrogen, nitrogen, and zero air gas cylinders and system inlet line, to remove moisture and organic impurities from gas streams, Alltech Associates, 2051 Waukegan Rd., Deerfield, IL 60015, or equivalent.

8.5 **Deionized Water.** HPLC grade, ultrahigh purity (for humidifier), best source.

8.6 **4-Bromofluorobenzene.** Used for tuning GC/MS, best source.

8.7 **Hexane.** For cleaning sample system components, reagent grade, best source.

8.8 **Methanol.** For cleaning sampling system components, reagent garde, best source.

9. Sampling System

9.1 System Description

9.1.1 Subatmospheric Pressure Sampling [see Figure 2 (Without Metal Bellows Type Pump)].

9.1.1.1 In preparation for subatmospheric sample collection in a canister, the canister is evacuated to 0.05 mm Hg. When opened to the atmosphere containing the VOCs to be sampled, the differential pressure causes the sample to flow into the canister. This technique may be used to collect grab samples (duration of 10 to 30 seconds) or time-integrated samples (duration of 12-24 hours) taken through a flow-restrictive inlet (e.g., mass flow controller, critical orifice).

9.1.1.2 With a critical orifice flow restrictor, there will be a decrease in the flow rate as the pressure approaches atmospheric. However, with a mass flow controller, the subatmospheric sampling system can maintain a constant flow rate from full vacuum to within about 7 kPa (1.0 psig) or less below ambient pressure.

9.1.2 Pressurized Sampling [See Figure 2 (With Metal Bellows Type Pump)].

9.1.2.1 Pressurized sampling is used when longer-term integrated samples or higher volume samples are required. The sample is collected in a canister using a pump and flow control arrangement to achieve a typical 103-206 kPa (15-30 psig) final canister pressure. For example, a 6-liter evacuated canister can be filled at 10 mL/min for 24 hours to achieve a final pressure of about 144 kPa (21 psig).

9.1.2.2 In pressurized canister sampling,a metal bellows type pump draws in ambient air from the sampling manifold to fill and pressurize the sample canister.

9.1.3 All Samplers.

9.1.3.1 A flow control device is chosen to maintain a constant flow into the canister over the desired sample period. This flow rate is determined so the canister is filled (to about 88.1 kPa for subatmospheric pressure sampling or to about one atmosphere above ambient pressure for pressurized sampling) over the desired sample period. The flow rate can be calculated by

$$F = \frac{P \times V}{T \times 60}$$

where:

F = flow rate, mL/min.
P = final canister pressure, atmospheres absolute. P is approximately equal to

$$\frac{\text{kPa gauge}}{101.2} + 1$$

V = volume of the canister, mL.
T = sample period, hours.

For example, if a 6-L canister is to be filled to 202 kPa (2 atmospheres) absolute pressure in 24 hours, the flow rate can be calculated by

$$F = \frac{2 \times 6000}{24 \times 60} = 8.3 \text{ mL/min}$$

9.1.3.2 For automatic operation, the timer is wired to start and stop the pump at appropriate times for the desired sample period. The timer must also control the solenoid valve, to open the valve when starting the pump and close the valve when stopping the pump.

9.1.3.3 The use of the Skinner Magnelatch valve avoids any substantial temperature rise that would occur with a conventional, normally closed solenoid valve that would have to be energized during the entire sample period. The temperature rise in the valve could cause outgassing of organic compounds from the Viton valve seat material. The Skinner Magnelatch valve requires only a brief electrical pulse to open or close at the appropriate start and stop times and therefore experiences no temperature increase. The pulses may be obtained either with an electronic timer that can be programmed for short (5 to 60) seconds ON periods, or with a conventional mechanical timer and a special pulse circuit. A simple electrical pulse circuit for operating the Skinner Magnelatch solenoid valve with a conventional mechanical timer is illustrated in Figure 9(a). However, with this simple circuit, the valve may operate unreliably during brief power interruptions or if the timer is manually switched on and off too fast. A better circuit incorporating a time-delay relay to provide more reliable valve operation is shown in Figure 9(b).

9.1.3.4 The connecting lines between the sample inlet and the canister should be as short as possible to minimize their volume. The flow rate into the canister should remain relatively constant over the entire sampling period. If a critical orifice is used, some drop in the flow rate may occur near the end of the sample period as the canister pressure approaches the final calculated pressure.

9.1.3.5 As an option, a second electronic timer (see Section 7.1.1.6) may be used to start the auxiliary pump several hours prior to the sampling period to flush and condition the inlet line.

9.1.3.6 Prior to field use, each sampling system must pass a humid zero air certification (see Section 11.2.2). All plumbing should be check carefully for leaks. The canisters must also pass a humid zero air certification before use (see Section 11.1).

9.2 Sampling Procedure

9.2.1 The sample canister should be cleaned and tested according to the procedure in Section 11.1.

9.2.2 A sample collection system is assembled as shown in Figure 2 (and Figure 3) and must meet certification requirements as outlined in Section 11.2.3.

[Note: The sampling system should be contained in an appropriate enclosure.]

9.2.3 Prior to locating the sampling system, the user may want to perform "screening analyses" using a portable GC system, as outlined in Appendix B, to determine potential volatile organics present and potential "hot spots." The information gathered from the portable GC screening analysis would be used in developing a monitoring protocol, which includes the sampling system location, based upon the "screening analysis" results.

9.2.4 After "screening analysis," the sampling system is located. Temperatures of ambient air and sampler box interior are recorded on the Compendium Method TO-14A field test data sheet (FTDS), as illustrated in Figure 10.

[Note: The following discussion is related to Figure 2.]

9.2.5 To verify correct sample flow, a "practice" (evacuated) canister is used in the sampling system.

[Note: For a subatmospheric sampler, the flow meter and practice canister are needed. For the pump-driven system, the practice canister is not needed, as the flow can be measured at the outlet of the system.]

A certified mass flow meter is attached to the inlet line of the manifold, just in front of the filter. The canister is opened. The sampler is turned on and the reading of the certified mass flow meter is compared to the sampler mass flow controller. The valves should agree within ±10%. If not, the sampler mass flow meter needs to be recalibrated or there is a leak in the system. This should be investigated and corrected.

[Note: Mass flow meter readings may drift. Check the zero reading carefully and add or subtract the zero reading when reading or adjusting the sampler flow rate, to compensate for any zero drift.]

After two minutes, the desired canister flow rate is adjusted to the proper value (as indicated by the certified mass flow meter) by the sampler flow control unit controller (e.g., 3.5 mL/min for 24 hr, 7.0 mL/min for 12 hr). Record final flow under "CANISTER FLOW RATE," as provided in Figure 10.

9.2.6 The sampler is turned off and the elapsed time meter is reset to 000.0.

[Note: Any time the sampler is turned off, wait at least 30 seconds to turn the sampler back on.]

9.2.7 The "practice" canister and certified mass flow meter are disconnected and a clean certified (see Section 11.1) canister is attached to the system.

9.2.8 The canister valve and vacuum/pressure gauge valve are opened.

9.2.9 Pressure/vacuum in the canister is recorded on the canister sampling field data sheet (see Figure 10) as indicated by the sampler vacuum/pressure gauge.

9.2.10 The vacuum/pressure gauge valve is closed and the maximum-minimum thermometer is reset to current temperature. Time of day and elapsed time meter readings are recorded on the canister sampling field data sheet.

9.2.11 The electronic timer is set to begin and stop the sampling period at the appropriate times. Sampling commences and stops by the programmed electronic timer.

9.2.12 After the desired sampling period, the maximum, minimum, current interior temperature and current ambient temperature are recorded on the sampling field data sheet. The current reading from the flow controller is recorded.

9.2.13 At the end of the sampling period, the vacuum/pressure gauge valve on the sampler is briefly opened and closed and the pressure/vacuum is recorded on the sampling FTDS. Pressure should be close to desired pressure.

[Note: For a subatmospheric sampling system, if the canister is at atmospheric pressure when the field final pressure check is performed, the sampling period may be suspect. This information should be noted on the sampling FTDS.]

Time of day and elapsed time meter readings are also recorded.

9.2.14 The canister valve is closed. The sampling line is disconnected from the canister and the canister is removed from the system. For a subatmospheric system, a certified mass flow meter is once again connected to the inlet manifold in front of the in-line filter and a "practice" canister is attached to the Magnelatch valve of the sampling system. The final flow rate is recorded on the canister sampling field data sheet (see Figure 10).

[Note: For a pressurized system, the final flow may be measured directly.]

The sampler is turned off.

9.2.15 An identification tag is attached to the canister. Canister serial number, sample number, location, and date are recorded on the tag. Complete the Chain-of-Custody (COC) for the canister and ship back to the laboratory for analysis.

10. Analytical System (see Figures 4, 5 and 6)

[Note: The following section relates to the use of the linear quadrupole MS technology as the detector. The ion-trap technology is as applicable to the detection of VOCs from a specially-treated canister. EPA developed this method using the linear quadrupole MS, as part of it's air toxics field and laboratory monitoring programs over the last several years. Modifications to these procedures may be necessary if other technology is utilized.]

10.1 System Description

10.1.1 GC/MS/SCAN System.

10.1.1.1 The analytical system is comprised of a GC equipped with a mass-selective detector set in the SCAN mode (see Figure 4). All ions are scanned by the MS repeatedly during the GC run. The system includes a computer and appropriate software for data acquisition, data reduction, and data reporting. A 400 mL air sample is collected from the canister into the analytical system. The sample air is first passed through a Nafion® dryer, through the 6-port chromatographic valve, then routed into a cryogenic trap.

[Note: While the GC-multidetector analytical system does not employ a Nafion® dryer for drying the sample gas stream, it is used here because the GC/MS system utilizes a larger sample volume and is far more sensitive to excessive moisture than the GC-multidetector analytical system. Moisture can adversely affect detector precision. The Nafion® dryer also prevents freezing of moisture on the 0.32-mm I.D. column, which may cause column blockage and possible breakage.]

The trap is heated (-160°C to 120°C in 60 sec) and the analyte is injected onto the OV-1 capillary column (0.32-mm x 50-m).

[Note: Rapid heating of the trap provides efficient transfer of the sample components onto the gas chromatographic column.]

Upon sample injection unto the column, the MS computer is signaled by the GC computer to begin detection of compounds which elute from the column. The gas stream from the GC is scanned within a preselected range of atomic mass units (amu). For detection of compounds in Table 1, the range should be 18 to 250 amu, resulting in a 1.5 Hz repetition rate. Six (6) scans per eluting chromatographic peak are provided at this rate. The 10-15 largest peaks are chosen by an automated data reduction program, the three scans nearest the peak apex are averaged, and a background subtraction is performed. A library search is then performed and the top ten best matches for each peak are listed. A qualitative characterization of the sample is provided by this procedure. A typical chromatogram of VOCs determined by GC/MS/SCAN is illustrated in Figure 11(a).

10.1.1.2 A Nafion® permeable membrane dryer is used to remove water vapor selectively from the sample stream. The permeable membrane consists of Nafion® tubing (a copolymer of tetrafluoroethylene and fluorosulfonyl monomer) that is coaxially mounted within larger tubing. The sample stream is passed through the interior of the Nafion® tubing, allowing water (and other light, polar compounds) to permeate through the walls into the dry purge stream flowing through the annular space between the Nafion® and outer tubing.

[Note: To prevent excessive moisture build-up and any memory effects in the dryer, a clean-up procedure involving periodic heating of the dryer (100°C for 20 minutes) while purging with dry zero air (~500 mL/min) should be implemented as part of the user's SOP manual. The clean-up procedure is repeated during each analysis (7). Studies have indicated no substantial loss of targeted VOCs utilizing the above clean-up procedure (7). However, use of the cleanup procedure for compounds other than those on the TCL can lead to loss of sample integrity (19). This clean-up procedure is particularly useful when employing cryogenic preconcentration of VOCs with subsequent GC analysis using a 0.32-mm I.D. column because excess accumulated water can cause trap and column blockage and also adversely affect detector precision. In addition, the improvement in water removal from the sampling stream will allow analyses of much larger volumes of sample air in the event that greater system sensitivity is required for targeted compounds.]

10.1.1.3 The packed metal tubing used for reducing temperature trapping of VOCs is shown in Figure 12. The cooling unit is comprised of a 0.32-cm outside diameter (O.D.) nickel tubing loop packed with 60-80 mesh Pyrex® beads, Nutech Model 320-01, or equivalent. The nickel tubing loop is wound onto a cylindrically formed tube heater (~250 watt). A cartridge heater (~25 watt) is sandwiched between pieces of aluminum plate at the trap inlet and outlet to provide additional heat to eliminate cold spots in the transfer tubing. During operation, the trap is inside a two-section stainless steel shell which is well insulated. Rapid heating (~150 to +100°C in 55 s) is accomplished by direct thermal contact between the heater and the trap tubing. Cooling is achieved by vaporization of the cryogen. In the shell, efficient cooling (+120 to −150°C in 225 s) is facilitated by confining the vaporized cryogen to the small open volume surrounding the trap assembly. The trap assembly and chromatographic valve are mounted on a baseplate fitted into the injection and auxiliary zones of the GC on an insulated pad directly above the column oven for most commercially available GC systems.

[Note: Alternative trap assembly and connection to the GC may be used depending on the user's requirements.]

The carrier gas line is connected to the injection end of the analytical column with a zero-dead-volume fitting that is usually held in the heated zone above the GC oven. A 15-cm x 15-cm x 24-cm aluminum box is fitted over the sample handling elements to complete the package. Vaporized cryogen is vented through the top of the box.

10.1.1.4 As an option, the analyst may wish to split the gas stream exiting the column with a low dead-volume tee, passing one-third of the sample gas (~1.0 mL/min) to the mass-selective detector and the remaining two-thirds (~2.0 mL/min) through an FID, as illustrated as an option in Figure 4. The use of the specific detector (MS/SCAN) coupled with the non-specific detector (FID) enables enhancement of data acquired from a single analysis. In particular, the FID provides the user:

- Semi-real time picture of the progress of the analytical scheme.
- Confirmation by the concurrent MS analysis of other labs that can provide only FID results.
- Ability to compare GC/FID with other analytical laboratories with only GC/FID capability.

10.1.2 GC/MS/SIM System.

10.1.2.1 The analytical system is comprised of a GC equipped with an OV-1 capillary column (0.32-mm x 50-m) and a mass-selective detector set in the SIM mode (see Figure 4). The GC/MS is set up for automatic, repetitive analysis. The system is programmed to acquire data for only the target compounds and to disregard all others. The sensitivity is 0.1 ppbv for a 250 mL air sample with analytical precision of about 5% relative standard deviation. Concentration of compounds based upon a previously installed calibration table is reported

by an automated data reduction program. A Nafion® dryer is also employed by this analytical system prior to cryogenic preconcentration; therefore, many polar compounds are not identified by this procedure.

10.1.2.2 SIM analysis is based on a combination of retention times and relative abundances of selected ions (see Table 2). These qualifiers are stored on the hard disk of the GC/MS computer and are applied for identification of each chromatographic peak. The retention time qualifier is determined to be ± 0.10 minute of the library retention time of the compound. The acceptance level for relative abundance is determined to be ± 15% of the expected abundance, except for vinyl chloride and methylene chloride, which is determined to be ± 25%. Three ions are measured for most of the forty compounds. When compound identification is made by the computer, any peak that fails any of the qualifying tests is flagged (e.g., with an *). All the data should be manually examined by the analyst to determine the reason for the flag and whether the compound should be reported as found. While this adds some subjective judgment to the analysis, computer-generated identification problems can be clarified by an experienced operator. Manual inspection of the quantitative results should also be performed to verify concentrations outside the expected range. A typical chromatogram of VOCs determined by GC/MS/SIM mode is illustrated in Figure 11(b).

10.1.3 GC-Multidetector (GC/FID/ECD) System with Optional PID.

10.1.3.1 The analytical system (see Figure 5) is comprised of a gas chromatograph equipped with a capillary column and electron capture and flame ionization detectors (see Figure 5). In typical operation, sample air from pressurized canisters is vented past the inlet to the analytical system from the canister at a flow rate of 75 mL/min. For analysis, only 35 mL/min of sample gas is used, while excess is vented to the atmosphere. Sub-ambient pressure canisters are connected directly to the inlet and air is pulled through a trap by a downstream vacuum. The sample gas stream is routed through a six port chromatographic valve and into the cryogenic trap for a total sample volume of 490 mL.

[Note: This represents a 14 minute sampling period at a rate of 35 mL/min.]

The trap (see Section 10.1.1.3) is cooled to -150°C by controlled release of a cryogen. VOCs are condensed on the trap surface while N_2, O_2, and other sample components are passed to the pump. After the organic compounds are concentrated, the valve is switched and the trap is heated. The revolatilized compounds are transported by helium carrier gas at a rate of 4 mL/min to the head of the Megabore® OV-1 capillary column (0.53-mm x 30-m). Since the column initial temperature is at -50°C, the VOCs are cryofocussed on the head of the column. Then, the oven temperature is programmed to increase and the VOCs in the carrier gas are chromatographically separated. The carrier gas containing the separated VOCs is then directed to two parallel detectors at a flow rate of 2 mL/min each. The detectors sense the presence of the speciated VOCs, and the response is recorded by either a strip chart recorder or a data processing unit.

10.1.3.2 Typical chromatograms of VOCs determined by the GC/FID/ECD analytical system are illustrated in Figures 11(c) and 11(d), respectively.

10.1.3.3 Helium is used as the carrier gas (~4 mL/min) to purge residual air from the trap at the end of the sampling phase and to carry the revolatilized VOCs through the Megabore® GC column. Moisture and organic impurities are removed from the helium gas stream by a chemical purifier installed in the GC (see Section 7.2.1.11). After exiting the OV-1 Megabore® column, the carrier gas stream is split to the two detectors at rates of ~2 mL/min each.

10.1.3.4 Gas scrubbers containing Drierite® or silica gel and 5A molecular sieve are used to remove moisture and organic impurities from the zero air, hydrogen, and nitrogen gas streams.

[Note: Purity of gas purifiers is checked prior to use by passing humid zero-air through the gas purifier and analyzing according to Section 11.2.2.]

10.1.3.5 All lines should be kept as short as practical. All tubing used for the system should be chromatographic grade stainless steel connected with stainless steel fittings. After assembly, the system should be checked for leaks according to manufacturer's specifications.

10.1.3.6 The FID burner air, hydrogen, nitrogen (make-up), and helium (carrier) flow rates should be set according to the manufacturer's instructions to obtain an optimal FID response while maintaining a stable flame throughout the analysis. Typical flow rates are: burner air, 450 mL/min; hydrogen, 30 mL/min; nitrogen, 30 mL/min; helium, 2 mL/min.

10.1.3.7 The ECD nitrogen make-up gas and helium carrier flow rates should be set according to manufacturer's instructions to obtain an optimal ECD response. Typical flow rates are: nitrogen, 76 mL/min and helium, 2 mL/min.

10.1.3.8 The GC/FID/ECD could be modified to include a PID (see Figure 6) for increased sensitivity (20). In the photoionization process, a molecule is ionized by ultraviolet light as follows: $R + h\nu \rightarrow R^{+} + e^{-}$, where R^{+} is the ionized species and a photon is represented by hv, with energy less than or equal to the ionization potential of the molecule. Generally all species with an ionization potential less than the ionization energy of the lamp are detected. Because the ionization potential of all major components of air (O_2, N_2, CO, CO_2, and H_2O) is greater than the ionization energy of lamps in general use, they are not detected. The sensor is comprised of an argon-filled, ultraviolet (UV) light source where a portion of the organic vapors are ionized in the gas stream. A pair of electrodes are contained in a chamber adjacent to the sensor. When a potential gradient is established between the electrodes, any ions formed by the absorption of UV light are driven by the created electric field to the cathode, and the current (proportional to the organic vapor concentration) is measured. The PID is generally used for compounds having ionization potentials less than the ratings of the ultraviolet lamps. This detector is used for determination of most chlorinated and oxygenated hydrocarbons, aromatic compounds, and high molecular weight aliphatic compounds. Because the PID is insensitive to methane, ethane, carbon monoxide, carbon dioxide, and water vapor, it is an excellent detector. The electron volt rating is applied specifically to the wavelength of the most intense emission line of the lamp's output spectrum. Some compounds with ionization potentials above the amp rating can still be detected due to the presence of small quantities of more intense light. A typical system configuration associated with the GC/FID/ECD/PID is illustrated in Figure 6.

10.2 GC/MS/SCAN/SIM System Performance Criteria

10.2.1 GC/MS System Operation.

10.2.1.1 Prior to analysis, the GC/MS system is assembled and checked according to manufacturer's instructions.

10.2.1.2 Table 3.0 outlines general operating conditions for the GC/MS/SCAN/SIM system with optional FID.

10.2.1.3 The GC/MS system is first challenged with humid zero air (see Section 11.2.2).

10.2.1.4 The GC/MS and optional FID system is acceptable if it contains less than 0.2 ppbv of targeted VOCs.

10.2.2 Daily GC/MS Tuning (see Figure 13)

10.2.2.1 At the beginning of each day or prior to a calibration, the GC/MS system must be tuned to verify that acceptable performance criteria are achieved.

10.2.2.2 For tuning the GC/MS, a cylinder containing 4-bromofluorobenzene (4-BFB) is introduced via a sample loop valve injection system.

[Note: Some systems allow auto-tuning to facilitate this process.]

The key ions and ion abundance criteria that must be met are illustrated in Table 4. Analysis should not begin until all those criteria are met.

10.2.2.3 The GC/MS tuning standard could also be used to assess GC column performance (chromatographic check) and as an internal standard. Obtain a background correction mass spectra of 4-BFB and check that all key ions criteria are met. If the criteria are not achieved, the analyst must retune the mass spectrometer and repeat the test until all criteria are achieved.

10.2.2.4 The performance criteria must be achieved before any samples, blanks or standards are analyzed. If any key ion abundance observed for the daily 4-BFB mass tuning check differs by more than 10% absolute abundance from that observed during the previous daily tuning, the instrument must be retuned or the sample and/or calibration gases reanalyzed until the above condition is met.

10.2.3 GC/MS Calibration (see Figure 13)

[Note: Initial and routine calibration procedures are illustrated in Figure 13.]

10.2.3.1 Initial Calibration. Initially, a multipoint dynamic calibration (three levels plus humid zero air) is performed on the GC/MS system, before sample analysis, with the assistance of a calibration system (see Figure 8). The calibration system uses NIST traceable standards [containing a mixture of the targeted VOCs at nominal concentrations of 10 ppmv in nitrogen (see Section 8.2)] as working standards to be diluted with humid zero air. The contents of the working standard cylinder(s) are metered (~2 mL/min) into the heated mixing chamber where they are mixed with a 2-L/min humidified zero air gas stream to achieve a nominal 10 ppbv per compound calibration mixture (see Figure 8). This nominal 10 ppbv standard mixture is allowed to flow and equilibrate for a minimum of 30 minutes. After the equilibration period, the gas standard mixture is sampled and analyzed by the real-time GC/MS system [see Figure 8(a) and Section 7.2.1]. The results of the analyses are averaged, flow audits are performed on the mass flow meters and the calculated concentration compared to generated values. After the GC/MS is calibrated at three concentration levels, a second humid zero air sample is passed through the system and analyzed. The second humid zero air test is used to verify that the GC/MS system is certified clean (<0.2 ppbv of target compounds).

As an alternative, a multipoint humid static calibration (three levels plus zero humid air) can be performed on the GC/MS system. During the humid static calibration analyses, three (3) specially-treated canisters are filled each at a different concentration between 1-20 ppbv from the calibration manifold using a pump and mass flow control arrangement [see Figure 8(c)]. The canisters are then delivered to the GC/MS to serve as calibration standards. The canisters are analyzed by the MS in the SIM mode, each analyzed twice.

The expected retention time and ion abundance (see Table 2 and Table 5) are used to verify proper operation of the GC/MS system. A calibration response factor is determined for each analyte, as illustrated in Table 5, and the computer calibration table is updated with this information, as illustrated in Table 6. The relative standard deviation (RSD) of the response factors should be <30% for the curve to be acceptable. If the RSD is >30%, recalibration is required. The samples are calculated using the mean of the response factors.

10.2.3.2 Routine Calibration. The GC/MS system is calibrated daily (and before sample analysis) with a one-point calibration. The GC/MS system is calibrated either with the dynamic calibration procedure [see Figure 8(a)] or with a 6-L specially prepared passivated canister filled with humid calibration standards from the calibration manifold (see Section 10.2.3.2). After the single point calibration, the GC/MS analytical system is challenged with a humidified zero gas stream to insure the analytical system returns to specification (<0.2 ppbv of selective organics). The relative percent difference (RPD) of each response factor from the mean response factor of the initial calibration curve should be <30% for continued use of the mean response factors. If the RPD is >30%, recalibration is required.

10.3 GC/FID/ECD System Performance Criteria (With Optional PID System) [see Figure 14])

10.3.1 Humid Zero Air Certification

10.3.1.1 Before system calibration and sample analysis, the GC/FID/ECD analytical system is assembled and checked according to manufacturer's instructions.

10.3.1.2 The GC/FID/ECD system is first challenged with humid zero air (see Section 11.2.2) and monitored.

10.3.1.3 Analytical systems contaminated with <0.2 ppbv of targeted VOCs are acceptable.

10.3.2 GC Retention Time Windows Determination (see Table 7)

10.3.2.1 Before analysis can be performed, the retention time windows must be established for each analyte.

10.3.2.2 Make sure the GC system is within optimum operating conditions.

10.3.2.3 Make three injections of the standard containing all compounds for retention time window determination.

[Note: The retention time window must be established for each analyte every 72 hours during continuous operation.]

10.3.2.4 Calculate the standard deviation of the three absolute retention times for each single component standard. The retention window is defined as the mean plus or minus three times the standard deviation of the individual retention times for each standard. In those cases where the standard deviation for a particular standard is zero, the laboratory must substitute the standard deviation of a closely-eluting, similar compound to develop a valid retention time window.

10.3.2.5 The laboratory must calculate retention time windows for each standard (see Table 7) on each GC column, whenever a new GC column is installed or when major components of the GC are changed. The data must be noted and retained in a notebook by the laboratory as part of the user SOP and as a quality assurance check of the analytical system.

10.3.3 GC Calibration

[Note: Initial and routine calibration procedures are illustrated in Figure 14.]

10.3.3.1 Initial Calibration. Initially, a multipoint dynamic calibration (three levels plus humid zero air) is performed on the GC/FID/ECD system, before sample analysis, with the assistance of a calibration system (see Figure 8). The calibration system uses NIST traceable standards or [containing a mixture of the targeted VOCs at nominal concentrations of 10 ppmv in nitrogen (see Section 8.2)] as working standards to be diluted with humid zero air. The contents of the working standard cylinders are metered (2 mL/min) into the heated mixing chamber where they are mixed with a 2-L/min humidified zero air stream to achieve a nominal 10 ppbv per compound calibration mixture (see Figure 8). This nominal 10 ppbv standard mixture is allowed to flow and equilibrate for an appropriate amount of time. After the equilibration period, the gas standard mixture is sampled and analyzed by the GC/MS system [see Figure 8(a)]. The results of the analyses are averaged, flow audits are performed on the mass flow controllers used to generate the standards and the appropriate response factors (concentration/area counts) are calculated for each compound, as illustrated in Table 5. The relative standard deviation (RSD) of the response factors should be <30% for the curve to be acceptable. If the RSD is >30%, recalibration is required. The samples are calculated using the mean of the response factors.

[Note: GC/FIDs are linear in the 1-20 ppbv range and may not require repeated multipoint calibrations; whereas, the GC/ECD will require frequent linearity evaluation.]

Table 5 outlines typical calibration response factors and retention times for 40 VOCs. After the GC/FID/ECD is calibrated at the three concentration levels, a second humid zero air sample is passed through the system and analyzed. The second humid zero air test is used to verify that the GC/FID/ECD system is certified clean (<0.2 ppbv of target compounds).

10.3.3.2 **Routine Calibration.** A one point calibration is performed daily on the analytical system to verify the initial multipoint calibration (see Section 10.3.3.1). The analyzers (GC/FID/ECD) are calibrated (before sample analysis) using the static calibration procedures (see Section 10.2.3.2) involving pressurized gas cylinders containing low concentrations of the targeted VOCs (~10 ppbv) in nitrogen. After calibration, humid zero air is once again passed through the analytical system to verify residual VOCs are not present. The relative percent difference (RPD) of each response factor from the mean response factor of the initial calibration curve should be <30% for continued use of the mean response factors. If the RPD is >30%, recalibration is required.

10.3.4 **GC/FID/ECD/PID System Performance Criteria**

10.3.4.1 As an option, the user may wish to include a PID to assist in peak identification and increase sensitivity.

10.3.4.2 This analytical system has been used in U.S. Environmental Protection Agency's Urban Air Toxic Monitoring Program (UATMP).

10.3.4.3 Preparation of the GC/FID/ECD/PID analytical system is identical to the GC/FID/ECD system (see Section 10.3).

10.3.4.4 Table 8 outlines typical retention times (minutes) for selected organics using the GC/FID/ECD/PID analytical system.

10.4 Analytical Procedures

10.4.1 **Canister Receipt**

10.4.1.1 The overall condition of each sample canister is observed. Each canister should be received with an attached sample identification tag and FTDS. Complete the canister COC.

10.4.1.2 Each canister is recorded in the dedicated laboratory logbook. Also noted on the identification tag are date received and initials of recipient.

10.4.1.3 The pressure of the canister is checked by attaching a pressure gauge to the canister inlet. The canister valve is opened briefly and the pressure (kPa, psig) is recorded.

[Note: If pressure is <83 kPa (<12 psig), the user may wish to pressurize the canisters, as an option, with zero grade nitrogen up to 137 kPa (20 psig) to ensure that enough sample is available for analysis. However, pressurizing the canister can introduce additional error, increase the minimum detection limit (MDL), and is time consuming. The user should weigh these limitations as part of his program objectives before pressurizing.]

Final cylinder pressure is recorded on the canister FTDS (see Figure 10).

10.4.1.4 If the canister pressure is increased, a dilution factor (DF) is calculated and recorded on the sampling data sheet.

$$DF = \frac{Y_a}{X_a}$$

where:

X_a = canister pressure absolute before dilution, kPa, psia.
Y_a = canister pressure absolute after dilution, kPa, psia.

After sample analysis, detected VOC concentrations are multiplied by the dilution factor to determine concentration in the sampled air.

10.4.2 GC/MS/SCAN Analysis (With Optional FID System)

10.4.2.1 The analytical system should be properly assembled, humid zero air certified (see Section 11.3), operated (see Table 3), and calibrated for accurate VOC determination.

10.4.2.2 The mass flow controllers are checked and adjusted to provide correct flow rates for the system.

10.4.2.3 The sample canister is connected to the inlet of the GC/MS/SCAN (with optional FID) analytical system. For pressurized samples, a mass flow controller is placed on the canister and the canister valve is opened and the canister flow is vented past a tee inlet to the analytical system at a flow of 75 mL/min so that 35 mL/min is pulled through the Nafion® dryer to the six-port chromatographic valve.

[Note: Flow rate is not as important as acquiring sufficient sample volume.]

Sub-ambient pressure samples are connected directly to the inlet.

10.4.2.4 The GC oven and cryogenic trap (inject position) are cooled to their set points of -50°C and -150°C, respectively.

10.4.2.5 As soon as the cryogenic trap reaches its lower set point of -150°C, the six-port chromatographic valve is turned to its fill position to initiate sample collection.

10.4.2.6 A 10 minute collection period of canister sample is utilized.

[Note: 40 mL/min x 10 min = 400 mL sampled canister contents.]

10.4.2.7 After the sample is preconcentrated in the cryogenic trap, the GC sampling valve is cycled to the inject position and the cryogenic trap is heated. The trapped analytes are thermally desorbed onto the head of the OV-1 capillary column (0.31-mm I.D. x 50-m length). The GC oven is programmed to start at -50°C and after 2 min to heat to 150°C at a rate of 8°C per minute.

10.4.2.8 Upon sample injection onto the column, the MS is signaled by the computer to scan the eluting carrier gas from 18 to 250 amu, resulting in a 1.5 Hz repetition rate. This corresponds to about 6 scans per eluting chromatographic peak.

10.4.2.9 Primary identification is based upon retention time and relative abundance of eluting ions as compared to the spectral library stored on the hard disk of the GC/MS data computer.

10.4.2.10 The concentration (ppbv) is calculated using the previously established response factors (see Section 10.2.3.2), as illustrated in Table 5.

[Note: If the canister is diluted before analysis, an appropriate multiplier is applied to correct for the volume dilution of the canister (see Section 10.4.1.4).]

10.4.2.11 The optional FID trace allows the analyst to record the progress of the analysis.

10.4.3 GC/MS/SIM Analysis (With Optional FID System).

10.4.3.1 When the MS is placed in the SIM mode of operation, the MS monitors only preselected ions, rather than scanning all masses continuously between two mass limits.

10.4.3.2 As a result, increased sensitivity and improved quantitative analysis can be achieved.

10.4.3.3 Similar to the GC/MS/SCAN configuration, the GC/MC/SIM analysis is based on a combination of retention times and relative abundances of selected ions (see Table 2 and Table 5). These qualifiers are stored on the hard disk of the GC/MS computer and are applied for identification of each chromatographic peak. Once the GC/MS/SIM has identified the peak, a calibration response factor is used to determine the analyte's concentration.

10.4.3.4 The individual analyses are handled in three phases: data acquisition, data reduction, and data reporting. The data acquisition software is set in the SIM mode, where specific compound fragments are monitored by the MS at specific times in the analytical run. Data reduction is coordinated by the postprocessing macro program that is automatically accessed after data acquisition is completed at the end of the GC run. Resulting ion profiles are extracted, peaks are identified and integrated, and an internal integration report is generated by the program. A reconstructed ion chromatogram for hardcopy reference is prepared by the program and various parameters of interest such as time, date, and integration constants are printed. At the completion of the macro program, the data reporting software is accessed. The appropriate calibration table (see Table 9) is retrieved by the data reporting program from the computer's hard disk storage and the proper retention time and response factor parameters are applied to the macro program's integration file. With reference to certain pre-set acceptance criteria, peaks are automatically identified and quantified and a final summary report is prepared, as illustrated in Table 10.

10.4.4 GC/FID/ECD Analysis (With Optional PID System)

10.4.4.1 The analytical system should be properly assembled, humid zero air certified (see Section 12.2) and calibrated through a dynamic standard calibration procedure (see Section 10.3.2). The FID detector is lit and allowed to stabilize.

10.4.4.2 Sixty-four minutes are required for each sample analysis: 15 min for system initialization, 14 min for sample collection, 30 min for analysis, and 5 min for post-time, during which a report is printed.

[Note: This may vary depending upon system configuration and programming.]

10.4.4.3 The helium and sample mass flow controllers are checked and adjusted to provide correct flow rates for the system. Helium is used to purge residual air from the trap at the end of the sampling phase and to carry the revolatilized VOCs from the trap onto the GC column and into the FID/ECD. The hydrogen, burner air, and nitrogen flow rates should also be checked. The cryogenic trap is connected and verified to be operating properly while flowing cryogen through the system.

10.4.4.4 The sample canister is connected to the inlet of the GC/FID/ECD analytical system. The canister valve is opened and the canister flow is vented past a tee inlet to the analytical system at 75 mL/min using a mass flow controller. During analysis, 35 mL/min of sample gas is pulled through the six-port chromatographic valve and routed through the trap at the appropriate time while the extra sample is vented. The VOCs are condensed in the trap while the excess flow is exhausted through an exhaust vent, which assures that the sample air flowing through the trap is at atmospheric pressure.

10.4.4.5 The six-port valve is switched to the inject position and the canister valve is closed.

10.4.4.6 The electronic integrator is started.

10.4.4.7 After the sample is preconcentrated on the trap, the trap is heated and the VOCs are thermally desorbed onto the head of the capillary column. Since the column is at -50°C, the VOCs are cryofocussed on the

column. Then, the oven temperature (programmed) increases and the VOCs elute from the column to the parallel FID/ECD assembly.

10.4.4.8 The peaks eluting from the detectors are identified by retention time (see Table 7 and Table 8), while peak areas are recorded in area counts. Typical response of the FID and ECD, respectively, for the forty (40) targeted VOCs identified in Compendium Method TO-14A are illustrated in Figures 15 and 16, respectively.

[Note: Refer to Table 7 for peak number and identification.]

10.4.4.9 The response factors (see Section 10.3.3.1) are multiplied by the area counts for each peak to calculate ppbv estimates for the unknown sample. If the canister is diluted before analysis, an appropriate dilution multiplier (DF) is applied to correct for the volume dilution of the canister (see Section 10.4.1.4).

10.4.4.10 Each canister is analyzed twice and the final concentrations for each analyte are the averages of the two analyses.

10.4.4.11 However, if the GC/FID/ECD analysis shows unexpected peaks which need further identification and attention or overlapping peaks are discovered, eliminating possible quantitation, the sample should then be subjected to a GC/MS/SCAN for positive identification and quantitation.

11. Cleaning and Certification Program

11.1 Canister Cleaning and Certification

11.1.1 All canisters must be clean and free of any contaminants before sample collection.

11.1.2 All canisters are leak tested by pressurizing them to approximately 206 kPa (~30 psig) with zero air.

[Note: The canister cleaning system in Figure 7 can be used for this task. The initial pressure is measured, the canister value is closed, and the final pressure is checked after 24 hours. If leak tight, the pressure should not vary more than ± 13.8 kPa (± 2 psig) over the 24 hour period.]

11.1.3 A canister cleaning system may be assembled as illustrated in Figure 7. Cryogen is added to both the vacuum pump and zero air supply traps. The canister(s) are connected to the manifold. The vent shut-off valve and the canister valve(s) are opened to release any remaining pressure in the canister(s). The vacuum pump is started and the vent shut-off valve is then closed and the vacuum shut-off valve is opened. The canister(s) are evacuated to <0.05 mm Hg (for at least one hour).

[Note: On a daily basis or more often if necessary, the cryogenic traps should be purged with zero air to remove any trapped water from previous canister cleaning cycles.]

11.1.4 The vacuum and vacuum/pressure gauge shut-off valves are closed and the zero air shut-off valve is opened to pressurize the canister(s) with humid zero air to approximately 206 kPa (~30 psig). If a zero gas generator system is used, the flow rate may need to be limited to maintain the zero air quality.

11.1.5 The zero shut-off valve is closed and the canister(s) is allowed to vent down to atmospheric pressure through the vent shut-off valve. The vent shut-off valve is closed. Repeat Sections 11.1.3 through 11.1.5 two additional times for a total of three (3) evacuation/pressurization cycles for each set of canisters.

11.1.6 At the end of the evacuation/pressurization cycle, the canister is pressurized to 206 kPa (30 psig) with humid zero air. The canister is then analyzed by a GC/MS or GC/FID/ECD analytical system. Any canister that has not tested clean (compared to direct analysis of humidified zero air of <0.2 ppbv of targeted VOCs) should not be used. As a "blank" check of the canister(s) and cleanup procedure, the final humid zero air fill of 100% of the canisters is analyzed until the cleanup system and canisters are proven reliable (<0.2 ppbv of targeted VOCs). The check can then be reduced to a lower percentage of canisters.

11.1.7 The canister is reattached to the cleaning manifold and is then reevacuated to <0.05 mm Hg and remains in this condition until used. The canister valve is closed. The canister is removed from the cleaning system and the canister connection is capped with a stainless steel fitting. The canister is now ready for collection of an air sample. An identification tag is attached to the neck of each canister for field notes and chain-of-custody purposes.

11.1.8 As an option to the humid zero air cleaning procedures, the canisters could be heated in an isothermal oven to 100°C during the procedure described in Section 11.1.3 to assist in removing less volatile VOCs from the walls of the canister.

[Note: Do not heat the values of the canister during this sequence.]

Once heated, the canisters are evacuated to 0.05 mm Hg. At the end of the heated/evacuated cycle, the canisters are pressurized with humid zero air and analyzed by the GC/FID/ECD system. Any canister that has not tested clean (<0.2 ppbv of targeted compounds) should not be used. Once tested clean, the canisters are reevacuated to 0.05 mm Hg and remain in the evacuated state until used.

11.2 Sampling System Cleaning and Certification

11.2.1 Cleaning Sampling System Components

11.2.1.1 Sample components are disassembled and cleaned before the sampler is assembled. Nonmetallic parts are rinsed with HPLC grade deionized water and dried in a vacuum oven at 50°C. Typically, stainless steel parts and fittings are cleaned by placing them in a beaker of methanol in an ultrasonic bath for 15 minutes. This procedure is repeated with hexane as the solvent.

11.2.1.2 The parts are then rinsed with HPLC grade deionized water and dried in a vacuum oven at 100°C for 12 to 24 hours.

11.2.1.3 Once the sampler is assembled, the entire system is purged with humid zero air for 24 hours.

11.2.2 Humid Zero Air Certification

[Note: In the following sections, "certification" is defined as evaluating the sampling system with humid zero air and humid calibration gases that pass through all active components of the sampling system. The system is "certified" if no significant additions or deletions (<0.2 ppbv of targeted compounds) have occurred when challenged with the test gas stream.]

11.2.2.1 The cleanliness of the sampling system is determined by testing the sampler with humid zero air without an evacuated gas cylinder, as follows.

11.2.2.2 The calibration system and manifold are assembled, as illustrated in Figure 8. The sampler (without an evacuated gas cylinder) is connected to the manifold and the zero air cylinder activated to generate a humid gas stream (~2 L/min) to the calibration manifold [see Figure 8(b)].

11.2.2.3 The humid zero gas stream passes through the calibration manifold, through the sampling system (without an evacuated canister) to a GC/FID/ECD analytical system at 75 mL/min so that 35 mL/min is pulled

through the six-port valve and routed through the cryogenic trap (see Section 10.2.2.1) at the appropriate time while the extra sample is vented.

[Note: The exit of the sampling system (without the canister) replaces the canister in Figure 4.]

After the sample (~400 mL) is preconcentrated on the trap, the trap is heated and the VOCs are thermally desorbed onto the head of the capillary column. Since the column is at -50°C, the VOCs are cryofocussed on the column. Then, the oven temperature (programmed) increases and the VOCs begin to elute and are detected by a GC/MS (see Section 10.2) or the GC/FID/ECD (see Section 10.3). The analytical system should not detect greater than 0.2 ppbv of targeted VOCs in order for the sampling system to pass the humid zero air certification test. Chromatograms of a certified sampler and contaminated sampler are illustrated in Figures 17(a) and (b), respectively. If the sampler passes the humid zero air test, it is then tested with humid calibration gas standards containing selected VOCs at concentration levels expected in field sampling (e.g., ~0.5 to 2 ppbv) as outlined in Section 11.2.3.

11.2.3 **Sampler System Certification with Humid Calibration Gas Standards.**

11.2.3.1 Assemble the dynamic calibration system and manifold as illustrated in Figure 8.

11.2.3.2 Verify that the calibration system is clean (less than 0.2 ppbv of targeted compounds) by sampling a humidified gas stream, *without* gas calibration standards, with a previously certified clean canister (see Section 12.1).

11.2.3.3 The assembled dynamic calibration system is certified clean if <0.2 ppbv of targeted compounds are found.

11.2.3.4 For generating the humidified calibration standards, the calibration gas cylinder(s) (see Section 8.2) containing nominal concentrations of 10 ppmv in nitrogen of selected VOCs, are attached to the calibration system, as outlined in Section 10.2.3.1. The gas cylinders are opened and the gas mixtures are passed through 0 to 10 mL/min certified mass flow controllers and blended with humidified zero air to generate ppbv levels of calibration standards.

11.2.3.5 After the appropriate equilibrium period, attach the sampling system (containing a certified evacuated canister) to the manifold, as illustrated in Figure 8(a).

11.2.3.6 Sample the dynamic calibration gas stream with the sampling system according to Section 9.2.1.

[Note: To conserve generated calibration gas, bypass the canister sampling system manifold and attach the sampling system to the calibration gas stream at the inlet of the in-line filter of the sampling system so the flow will be less than 500 mL/min.]

11.2.3.7 Concurrent with the sampling system operation, realtime monitoring of the calibration gas stream is accomplished by the on-line GC/MS or GC-multidetector analytical system [Figure 8(b)] to provide reference concentrations of generated VOCs.

11.2.3.8 At the end of the sampling period (normally same time period used for anticipated sampling), the sampling system canister is analyzed and compared to the reference GC/MS or GC-multi-detector analytical system to determine if the concentration of the targeted VOCs was increased or decreased by the sampling system.

11.2.3.9 A recovery of between 90% and 110% is expected for all targeted VOCs.

12. Performance Criteria and Quality Assurance

12.1 Standard Operating Procedures (SOPs)

12.1.1 SOPs should be generated in each laboratory describing and documenting the following activities: (1) assembly, calibration, leak check, and operation of specific sampling systems and equipment used; (2) preparation, storage, shipment, and handling of samples; (3) assembly, leak-check, calibration, and operation of the analytical system, addressing the specific equipment used; (4) canister storage and cleaning; and (5) all aspects of data recording and processing, including lists of computer hardware and software used.

12.1.2 Specific stepwise instructions should be provided in the SOPs and should be readily available to and understood by the laboratory personnel conducting the work.

12.2 Method Relative Accuracy and Linearity

12.2.1 Accuracy can be determined by injecting VOC standards (see Section 8.2) from an audit cylinder into a sampler. The contents are then analyzed for the components contained in the audit canister. Percent relative accuracy is calculated:

$$\% \text{ Relative Accuracy} = \frac{X - Y}{X} \times 100$$

where:

Y = concentration of the targeted compound recovered from sampler, ppbv.
X = concentration of VOC targeted compounds in the NIST-SRM audit cylinders, ppbv.

12.2.2 If the relative accuracy does not fall between 90 and 110 percent, the field sampler should be removed from use, cleaned, and recertified according to initial certification procedures outlined in Sections 11.2.2 and 11.2.3. Historically, concentrations of carbon tetrachloride, tetrachloroethylene, and hexachlorobutadiene have sometimes been detected at lower concentrations when using parallel ECD and FID detectors. When these three compounds are present at concentrations close to calibration levels, both detectors usually agree on the reported concentrations. At concentrations below 4 ppbv, there is a problem with nonlinearity of the ECD. Plots of concentration versus peak area for calibration compounds detected by the ECD have shown that the curves are nonlinear for carbon tetrachloride, tetrachloroethylene, and hexachlorobutadiene, as illustrated in Figures 18(a) through 18(c). Other targeted ECD and FID compounds scaled linearly for the range 0 to 8 ppbv, as shown for chloroform in Figure 18(d). For compounds that are not linear over the calibration range, area counts generally roll off between 3 and 4 ppbv. To correct for the nonlinearity of these compounds, an additional calibration step is performed. An evacuated stainless steel canister is pressurized with calibration gas a nominal concentration of 8 ppbv. The sample is then diluted to approximately 3.5 ppbv with zero air and analyzed. The instrument response factor (ppbv/area) of the ECD for each of the three compounds is calculated for the 3.5 ppbv sample. Then, both the 3.5 ppbv and the 8 ppbv response factors are entered into the ECD calibration table. Most commercial analytical systems have software designed to accommodate multilevel calibration entries, so the correct response factors are automatically calculated for concentrations in this range.

12.3 Method Modification

12.3.1 Sampling

12.3.1.1 The sampling system for pressurized canister sampling could be modified to use a lighter, more compact pump. The pump currently being used weights about 16 kilograms (~35 lbs). Commercially available pumps that could be used as alternatives to the prescribed sampler pump are described below. Metal Bellow MB-

41 pump: These pumps are cleaned at the factory; however, some precaution should be taken with the circular (~4.8 cm diameter) Teflon® and stainless steel part directly under the flange. It is often dirty when received and should be cleaned before use. This part is cleaned by removing it from the pump, manually cleaning with deionized water, and placing in a vacuum oven at 100°C for at least 12 hours. Exposed parts of the pump head are also cleaned with swabs and allowed to air dry. These pumps have proven to be very reliable; however, they are only useful up to an outlet pressure of about 137 kPa (~20 psig). Neuberger Pump: Viton gaskets or seals must be specified with this pump. The "factory direct" pump is received contaminated and leaky. The pump is cleaned by disassembling the pump head (which consists of three stainless steel parts and two gaskets), cleaning the gaskets with deionized water and drying in a vacuum oven, and remachining (or manually lapping) the sealing surfaces of the stainless steel parts. The stainless steel parts are then cleaned with methanol, hexane, deionized water and heated in a vacuum oven. The cause for most of the problems with this pump has been scratches on the metal parts of the pump head. Once this rework procedure is performed, the pump is considered clean and can be used up to about 240 kPa (~35 psig) output pressure. This pump is utilized in the sampling system illustrated in Figure 3.

12.3.1.2 **Alternative Sampler Configuration.** *The sampling system described in Compendium* Method TO-14A can be modified as described in Appendix C (see Figure C-1). Originally, this configuration was used in EPA's FY-88 Urban Air Toxics Pollutant Program.

12.3.2 **Analysis.**

12.3.2.1 Inlet tubing from the calibration manifold could be heated to 50°C (same temperature as the calibration manifold) to prevent condensation on the internal walls of the system.

12.3.2.2 The analytical strategy for Method TO-14A involves positive identification and quantitation by GC/MS/SCAN/SIM mode of operation with optional FID. This is a highly specific and sensitive detection technique. Because a specific detector system (GC/MS/SCAN/SIM) is more complicated and expensive than the use of non-specific detectors (GC/FID/ECD/PID), the analyst may want to perform a screening analysis and preliminary quantitation of VOC species in the sample, including any polar compounds, by utilizing the GC-multidetector (GC/FID/ECD/PID) analytical system prior to GC/MS analysis. This system can be used for approximate quantitation. The GC/FID/ECD/PID provides a "snap-shot" of the constituents in the sample, allowing the analyst to determine:

- Extent of misidentification due to overlapping peaks.
- Whether the constituents are within the calibration range of the anticipated GC/MS/SCAN/SIM analysis or does the sample require further dilution.
- Are there unexpected peaks which need further identification through GC/MS/SCAN or are there peaks of interest needing attention?

If unusual peaks are observed from the GC/FID/ECD/PID system, the analyst then performs a GC/MS/SCAN analysis. The GC/MS/SCAN will provide positive identification of suspect peaks from the GC/FID/ECD/PID system. If no unusual peaks are identified and only a select number of VOCs are of concern, the analyst can then proceed to GC/MS/SIM. The GC/MS/SIM is used for final quantitation of selected VOCs. Polar compounds, however, cannot be identified by the GC/MS/SIM due to the use of a Nafion® dryer to remove water from the sample prior to analysis. The dryer removes polar compounds along with the water. The analyst often has to make this decision incorporating project objectives, detection limits, equipment availability, cost and personnel capability in developing an analytical strategy. The use of the GC/FID/ECD/PID as a "screening" approach, with the GC/MS/SCAN/SIM for final identification and quantitation, is outlined in Figure 20.

12.4 Method Safety

This procedure may involve hazardous materials, operations, and equipment. This method does not purport to address all of the safety problems associated with its use. It is the user's responsibility to establish appropriate safety and health practices and determine the applicability of regulatory limitation prior to the implementation of this procedure. This should be part of the user's SOP manual.

12.5 Quality Assurance (see Figure 21)

12.5.1 Sampling System

12.5.1.1 Section 9.2 suggests that a portable GC system be used as a *"screening analysis" prior to* locating fixed-site samplers (pressurized or subatmospheric).

12.5.1.2 Section 9.2 requires pre and post-sampling measurements with a certified mass flow controller for flow verification of sampling system.

12.5.1.3 Section 11.1 requires all canisters to be pressure tested to 207 kPa ± 14 kPa (30 psig ± 2 psig) over a period of 24 hours.

12.5.1.4 Section 11.1 requires that all canisters be certified clean (<0.2 ppbv of targeted VOCs) through a humid zero air certification program.

12.5.1.5 Section 11.2.2 requires all field sampling systems to be certified initially clean (<0.2 ppbv of targeted VOCs) through a humid zero air certification program.

12.5.1.6 Section 11.2.3 requires all field sampling systems to pass an initial humidified calibration gas certification [at VOC concentration levels expected in the field (e.g., 0.5 to 2 ppbv)] with a percent recovery of greater than 90.

12.5.2 GC/MS/SCAN/SIM System Performance Criteria

12.5.2.1 Section 10.2.1 requires the GC/MS analytical system to be certified clean (<0.2 ppbv of targeted VOCs) prior to sample analysis, through a humid zero air certification.

12.5.2.2 Section 10.2.2 requires the daily tuning of the GC/MS with 4-BFB and that it meet the key ions and ion abundance criteria (10%) outlined in Table 5.

12.5.2.3 Section 10.2.3 requires both an initial multipoint humid static calibration (three levels plus humid zero air) and a daily calibration (one point) of the GC/MS analytical system.

12.5.3 GC-Multidetector System Performance Criteria

12.5.3.1 Section 10.3.1 requires the GC/FID/ECD analytical system, prior to analysis, to be certified clean (<0.2 ppbv of targeted VOCs) through a humid zero air certification.

12.5.3.2 Section 10.3.2 requires that the GC/FID/ECD analytical system establish retention time windows for each analyte prior to sample analysis, when a new GC column is installed, or major components of the GC system altered since the previous determination.

12.5.3.3 Section 8.2 requires that all calibration gases be traceable to NIST-SRMs.

12.5.3.4 Section 10.3.2 requires that the retention time window be established throughout the course of a 72-hr analytical period.

12.5.3.5 Section 10.3.3 requires both an initial multipoint calibration (three levels plus humid zero air) and a daily calibration (one point) of the GC/FID/ECD analytical system with zero gas dilution of NIST traceable gases.

13. Acknowledgements

The determination of VOCs in ambient air is a complex task, primarily because of the wide variety of compounds of interest and the lack of standardized sampling and analytical procedures. While there are numerous procedures for sampling and analyzing VOCs in ambient air, this method draws upon the best aspects of each one and combines them into a standardized methodology. In many cases, the individuals listed in the acknowledgement table contributed to the research, documentation and peer review of the original Compendium Method TO-14 and now revised as Compendium Method TO-14A. In some cases, new names appear as likely sources of new information.

14. References

1. Oliver, K. D., Pleil, J. D., and McClenny, W. A. "Sample Integrity of Trace Level Volatile Organic Compounds in Ambient Air Stored in Specially Prepared Polished Canisters," *Atmos. Environ.* 20:1403, 1986.

2. Holdren, M. W. and Smith, D. L. "Stability of Volatile Organic Compounds While Stored in Specially Prepared Polished Stainless Steel Canisters," U. S. Environmental Protection Agency, Research Triangle Park, NC, Final Report, EPA Contract No. 68-02-4127, Battelle, January 1986.

3. Kelly, T. J. and Holdren, M. W., "Applicability of Canisters for Sample Storage in the Determination of Hazardous Air Pollutants," *Atmos. Environ.*, 29(19):2595, 1995.

4. McClenny, W. A., Pleil, J. D., Evans, G. F., Oliver, K. D., Holdren, M. W., and Winberry, W. T., "Canister-Based Method for Monitoring Toxic VOCs in Ambient Air," *JAWMA*, 41(10):1038, 1991.

5. McClenny, W. A., Pleil, J. D., Holdren, J. W., and Smith, R. N. "Automated Cryogenic Preconcentration and Gas Chromatographic Determination of Volatile Organic Compounds," *Anal. Chem.* 56:2947, 1984.

6. Pleil, J. D., Oliver, K. D., and McClenny, W. A., "Enhanced Performance of Nafion® Dryers in Removing Water from Samples Prior to Gas Chromatographic Analysis," *JAPCA*, 37:244, 1987.

7. Oliver, K. D. and Pleil, J. D., "Automated Cryogenic Sampling and Gas Chromatographic Analysis of Ambient Vapor-Phase Organic Compounds: Procedures and Comparison Tests," ManTech, Inc. - Environmental Services, EPA Contract No. 68-02-4035, U. S. Environmental Protection Agency, Research Triangle Park, NC,

COMPENDIUM METHOD TO-14A ACKNOWLEDGEMENT

Topic	Contact	Address	Telephone No.
Sampling System	Mr. Frank McElroy	U.S. Environmental Protection Agency National Exposure Research Laboratory MD-77 Research Triangle Park, NC 27711	919-541-2622
	Dr. Bill McClenny Mr. Joachim Pleil	U.S. Environmental Protection Agency National Exposure Research Laboratory MD-44 Research Triangle Park, NC 27711	919-541-3158 919-541-4680
	Mr. Bill Taylor	Graseby 500 Technology Ct. Smyrna, GA 30082	1-800-241-6898
	Mr. Joseph P. Krasnec	Scientific Instrumentation Specialists, Inc. P.O. Box 8941 Moscow, Idaho 83843	208-882-3860
Analytical System			
GC/FID, GC/FID/ECD	Dr. Bill McClenny Mr. Joachim Pleil	U.S. Environmental Protection Agency National Exposure Research Laboratory MD-44 Research Triangle Park, NC 27711	919-541-3158 919-541-4680
	Ms. Karen D. Oliver	ManTech, Inc. Environmental Sciences P.O. Box 12313 Research Triangle Park, NC 27709	919-549-0611
GC/FID, GC/FID/ECD/PID	Mr. Dave-Paul Dayton Ms. JoAnn Rice	ERG P.O. Box 13000 Progress Center Research Triangle Park, NC 27709	919-481-0212
GC/MS/SCAN/SIM	Dr. Bill McClenny Mr. Joachim Pleil	U.S. Environmental Protection Agency National Exposure Research Laboratory MD-44 Research Triangle Park, NC 27711	919-541-3158 919-541-4680
Canister Cleaning Certification and VOC Canister Storage Stability	Dr. Bill McClenny Mr. Joachim Pleil	U.S. Environmental Protection Agency National Exposure Research Laboratory MD-44 Research Triangle Park, NC 27711	919-541-3158 919-541-4680
	Mr. Dave-Paul Dayton Ms. JoAnn Rice	ERG P.O. Box 13000 Progress Center Research Triangle Park, NC 27709	919-481-0212
	Dr. R.K.M. Jayanty	Research Triangle Institute P.O. Box 12194 Research Triangle Park, NC 27709	919-541-6000
Cryogenic Sampling Unit	Dr. Bill McClenny Mr. Joachim Pleil	U.S. Environmental Protection Agency National Exposure Research Laboratory MD-44 Research Triangle Park, NC 27711	919-541-3158 919-541-4680
U.S. EPA Audit Gas Standards	Mr. Howard Christ	U.S. Environmental Protection Agency National Exposure Research Laboratory MD-77B Research Triangle Park, NC 27711	919-541-4531

1985.

8. McClenny, W. A. and Pleil, J. D., "Automated Calibration and Analysis of VOCs with a Capillary Column Gas Chromatograph Equipped for Reduced Temperature Trapping," in *Proceedings of the 1984 Air Pollution Control Association Annual Meeting*, San Francisco, CA, June 24-29, 1984.

9. McClenny, W. A., Pleil, J. D., Lumpkin, T. A., and Oliver, K. D., "Update on Canister-Based Samplers for VOCs," in *Proceedings of the 1987 EPA/APCA Symposium on Measurement of Toxic and Related Air Pollutants*, May 1987.

10. Pleil, J. D., "Automated Cryogenic Sampling and Gas Chromatographic Analysis of Ambient Vapor-Phase Organic Compounds: System Design," ManTech, Inc. - Environmental Services, U. S. Environmental Protection Agency, Research Triangle Park, NC, 1982, EPA Contract No. 68-02-2566.

11. Oliver, K. D. and Pleil, J. D., "Analysis of Canister Samples Collected During the CARB Study in August 1986," U. S. Environmental Protection Agency, Research Triangle Park, NC, ManTech, Inc. - Environmental Services, 1987.

12. Pleil, J. D., and Oliver, K. D., "Measurement of Concentration Variability of Volatile Organic Compounds in Indoor Air: Automated Operation of a Sequential Syringe Sampler and Subsequent GC/MS Analysis," U. S. Environmental Protection Agency, Research Triangle Park, NC, ManTech, Inc. - Environmental Services, 1987.

13. Walling, J. F., "The Utility of Distributed Air Volume Sets When Sampling Ambient Air Using Solid Adsorbents," *Atmos. Environ.*, 18:855-859, 1984.

14. Walling, J. F., Bumgarner, J. E., Driscoll, J. D., Morris, C. M., Riley, A. E. and Wright, L. H., "Apparent Reaction Products Desorbed From Tenax Used to Sample Ambient Air," *Atmos. Environ.*, 20:51-57, 1986.

15. Berkley, R. E., "Overview of Field Deployable Gas Chromatographic Analyzers of Airborne Toxic Organic Vapors," *Proceedings of the 1994 On-Site Analysis Conference*, Houston, TX, January 24-26, 1994.

16. McElroy, F. F., Thompson, V. L., Holland, D. M., Lonneman, W. A., and Seila, R. L., "Cryogenic Preconcentration-Direct FID Method for Measurement of Ambient NMOC: Refinement and Comparison with GC Speciation," *JAPCA*, 35(6):710, 1986.

17. Rasmussen, R. A. and Lovelock, J. E., "Atmospheric Measurements Using Canister Technology," *J. Geophys. Res.*, 83:8369-8378, 1983.

18. Rasmussen, R. A. and Khalil, M. A. K., "Atmospheric Halocarbons: Measurements and Analysis of Selected Trace Gases," in *Proc. NATO ASI on Atmospheric Ozone*, BO: 209-231.

19. Dayton, D. D. and Rice, J., *Development and Evaluation of a Prototype Analytical System for Measuring Air Toxics*, U. S. Environmental Protection Agency, Research Triangle Park, NC 27711, EPA Contract No. 68-02-3889, WA No. 120, November 1987.

TABLE 1. COMPENDIUM METHOD TO-14A VOC TCL DATA SHEET

COMPOUND (SYNONYM)	FORMULA	MOLECULAR WEIGHT	BOILING POINT (°C)	MELTING POINT (°C)	CAS NO
Freon 12 (Dichlorodifluoromethane)	Cl_2CF_2	120.91	-29.8	-158.0	75-71-8
Methyl chloride (Chloromethane)	CH_3Cl	50.49	-24.2	-97.1	74-87-3
Freon 114 (1,2-Dichloro-1,1,2,2-tetrafluoroethane)	$ClCF_2CClF_2$	170.93	4.1	-94.0	76-14-2
Vinyl chloride (Chloroethylene)	$CH_2=CHCl$	62.50	-13.4	-1538.0	75-01-4
Methyl bromide (Bromomethane)	CH_3Br	94.94	3.6	-93.6	74-83-9
Ethyl chloride (Chloroethane)	CH_3CH_2Cl	64.52	12.3	-136.4	75-00-3
Freon 11 (Trichlorofluoromethane)	CCl_3F	137.38	23.7	-111.0	75-69-4
Vinylidene chloride (1,1-Dichloroethene)	$C_2H_2Cl_2$	96.95	31.7	-122.5	75-35-4
Dichloromethane (Methylene chloride)	CH_2Cl_2	84.94	39.8	-95.1	75-09-2
Freon 113 (1,1,2-Trichloro-1,2,2-trifluoroethane)	CF_2ClCCl_2F	187.38	47.7	-36.4	76-13-1
1,1-Dichloroethane (Ethylidene chloride)	CH_3CHCl_2	98.96	57.3	-97.0	74-34-3
cis-1,2-Dichloroethylene	$CHCl=CHCl$	96.94	60.3	-80.5	156-59-2
Chloroform (Trichloromethane)	$CHCl_3$	119.38	61.7	-63.5	67-66-3
1,2-Dichloroethane (Ethylene dichloride)	$ClCH_2CH_2Cl$	98.96	83.5	-35.3	107-06-2
Methyl chloroform (1,1,1-Trichloroethane)	CH_3CCl_3	133.41	74.1	-30.4	71-55-6
Benzene (Cyclohexatriene)	C_6H_6	78.12	80.1	5.5	71-43-2
Carbon tetrachloride (Tetrachloromethane)	CCl_4	153.82	76.5	-23.0	56-23-5
1,2-Dichloropropane (Propylene dichloride)	$CH_3CHClCH_2Cl$	112.99	96.4	-100.4	78-87-5
Trichloroethylene (Trichloroethene)	$ClCH=CCl_2$	131.29	87	-73.0	79-01-6
cis-1,3-Dichloropropene (cis-1,3-dichloropropylene)	$CH_3CCl=CHCl$	110.97	104.3	—	542-75-6
trans-1,3-Dichloropropene (trans-1,3-Dichloropropylene)	$ClCH_2CH=CHCl$	110.97	112.0	—	542-75-6
1,1,2-Trichloroethane (Vinyl trichloride)	$CH_2ClCHCl_2$	133.41	113.8	-36.5	79-00-5
Toluene (Methyl benzene)	$C_6H_5CH_3$	92.15	110.6	-95.0	108-88-3
1,2-Dibromoethane (Ethylene dibromide)	$BrCH_2CH_2Br$	187.88	131.3	9.8	106-93-4
Tetrachloroethylene (Perchloroethylene)	$Cl_2C=CCl_2$	165.83	121.1	-19.0	127-18-4
Chlorobenzene (Phenyl chloride)	C_6H_5Cl	112.56	132.0	-45.6	108-90-7
Ethylbenzene	$C_6H_5C_2H_5$	106.17	136.2	-95.0	100-41-4
m-Xylene (1,3-Dimethylbenzene)	$1,3-(CH_3)_2C_6H_4$	106.17	139.1	-47.9	108-38-3
p-Xylene (1,4-Dimethylxylene)	$1,4-(CH_3)_2C_6H_4$	106.17	138.3	13.3	106-42-3
Styrene (Vinyl benzene)	$C_6H_5CH=CH_2$	104.16	145.2	-30.6	100-42-5
1,1,2,2-Tetrachloroethane	$Cl_2CHCHCl_2$	167.85	146.2	-36.0	79-34-5
o-Xylene (1,2-Dimethylbenzene)	$1,2-(CH_3)_2C_6H_4$	106.17	144.4	-25.2	95-47-6
1,3,5-Trimethylbenzene (Mesitylene)	$1,3,5-(CH_3)_3C_6H_3$	120.20	164.7	-44.7	108-67-8
1,2,4-Trimethylbenzene (Pseudocumene)	$1,2,4-(CH_3)_3C_6H_3$	120.20	169.3	-43.8	95-63-6
m-Dichlorobenzene (1,3-Dichlorobenzene)	$1,3-Cl_2C_6H_4$	147.01	173.0	-24.7	541-73-1
Benzyl chloride (α-Chlorotoluene)	$C_6H_5CH_2Cl$	126.59	179.3	-39.0	100-44-7
o-Dichlorobenzene (1,2-dichlorobenzene)	$1,2-Cl_2C_6H_4$	147.01	180.5	-17.0	95-50-1
p-Dichlorobenzene (1,4-dichlorobenzene)	$1,4-Cl_2C_6H_4$	147.01	174.0	53.1	106-46-7
1,2,4-Trichlorobenzene	$1,2,4-Cl_3C_6H_3$	181.45	213.5	17.0	120-82-1
Hexachlorobutadiene (1,1,2,3,4,4-Hexachloro-1,3-butadiene)	C_4Cl_6	260.8	186 (sublimes)	-21.0	87-68-3

TABLE 2. ION/ABUNDANCE AND EXPECTED RETENTION TIME FOR SELECTED COMPENDIUM METHOD TO-14A VOCs ANALYZED BY GC/MS/SIM

COMPOUND (SYNONYM)	Ion/Abundance (amu/% base peak)	Expected Retention Time (min)
Freon 12 (Dichlorodifluoromethane)	85/100 87/31	5.01
Methyl chloride (Chloromethane)	50/100 52/34	5.69
Freon 114 (1,2-Dichloro-1,1,2,2-tetrafluoroethane)	85/100 135/56 87/33	6.55
Vinyl chloride (Chloroethene)	62/100 27/125 64/32	6.71
Methyl bromide (Bromomethane)	94/100 96/85	7.83
Ethyl chloride (Chloroethane)	64/100 29/140 27/140	8.43
Freon 11 (Trichlorofluoromethane)	101/100 103/67	9.97
Vinylidene chloride (1,1-Dichloroethene)	61/100 96/55 63/31	10.93
Dichloromethane (Methylene chloride)	49/100 84/65 86/45	11.21
Freon 113 (1,1,2-Trichloro-1,2,2-trifluoroethane)	151/100 101/140 103/90	11.60
1,1-Dichloroethane (Ethylidene chloride)	63/100 27/64 65/33	12.50
cis-1,2-Dichloroethylene	61/100 96/60 98/44	13.40
Chloroform (Trichloromethane)	83/100 85/65 47/35	13.75
1,2-Dichloroethane (Ethylene dichloride)	62/100 27/70 64/31	14.39
Methyl chloroform (1,1,1-Trichloroethane)	97/100 99/64 61/61	14.62

TABLE 2. (continued)

COMPOUND (SYNONYM)	Ion/Abundance (amu/% base peak)	Expected Retention Time (min)
Benzene (Cyclohexatriene)	78/100 77/25 50/35	15.04
Carbon tetrachloride (Tetrachloromethane)	117/100 119/97	15.18
1,2-Dichloropropane (Propylene dichloride)	63/100 41/90 62/70	15.83
Trichloroethylene (Trichloroethene)	130/100 132/92 95/87	16.10
cis-1,3-Dichloropropene	75/100 39/70 77/30	16.96
trans-1,3-Dichloropropene (cis-1,3 Dichloropropylene)	75/100 39/70 77/30	17.49
1,1,2-Trichloroethane (Vinyl trichloride)	97/100 83/90 61/82	17.61
Toluene (Methyl benzene)	91/100 92/57	17.86
1,2-Dibromoethane (Ethylene dibromide)	107/100 109/96 27/115	18.48
Tetrachloroethylene (Perchloroethylene)	166/100 164/74 131/60	19.01
Chlorobenzene (Phenyl chloride)	112/100 77/62 114/32	19.73
Ethylbenzene	91/100 106/28	20.20
m,p-Xylene (1,3/1,4-Dimethylbenzene)	91/100 106/40	20.41
Styrene (Vinyl benzene)	104/100 78/60 103/49	20.81
1,1,2,2-Tetrachloroethane (Tetrachlorethane)	83/100 85/64	20.92
o-Xylene (1,2-Dimethylbenzene)	91/100 106/40	20.92
4-Ethyltoluene	105/100 120/29	22.53

TABLE 2. (continued)

COMPOUND (SYNONYM)	Ion/Abundance (amu/% base peak)	Expected Retention Time (min)
1,3,5-Trimethylbenzene (Mesitylene)	105/100 120/42	22.65
1,2,4-Trimethylbenzene (Pseudocumene)	105/100 120/42	23.18
m-Dichlorobenzene (1,3-Dichlorobenzene)	146/100 148/65 111/40	23.31
Benzyl chloride (α-Chlorotoluene)	91/100 126/26	23.32
p-Dichlorobenzene (1,4-dichlorobenzene)	146/100 148/65 111/40	23.41
o-Dichlorobenzene (1,2-dichlorobenzene)	146/100 148/65 111/40	23.88
1,2,4-Trichlorobenzene	180/100 182/98 184/30	26.71
Hexachlorobutadiene (1,1,2,3,4,4 Hexachloro-1,3-butadiene)	225/100 227/66 223/60	27.68

TABLE 3. GENERAL GC AND MS OPERATING CONDITIONS FOR COMPENDIUM METHOD TO-14A

Chromatography	
Column	General OV-1 crosslinked methyl silicone (50-m x 0.31-mm I.D., 17 um film thickness), or equivalent
Carrier Gas	Helium (~2.0 mL/min at 250°C)
Injection Volume	Constant (1-3 µL)
Injection Mode	Splitless
Temperature Program	
Initial Column Temperature	-50°C
Initial Hold Time	2 min
Program	8°C/min to 150°C
Final Hold Time	15 min
Mass Spectrometer	
Mass Range	18 to 250 amu
Scan Time	1 sec/scan
EI Condition	70 eV
Mass Scan	Follow manufacturer's instruction for selecting mass selective detector (MS) and selected ion monitoring (SIM) mode
Detector Mode	Multiple ion detection
FID System (Optional)	
Hydrogen Flow	~30 mL/minute
Carrier Flow	~30 mL/minute
Burner Air	~400 mL/minute

TABLE 4. 4-BFB KEY IONS AND ION ABUNDANCE CRITERIA

Mass	Ion Abundance Criteria
50	15 to 40% of mass 95
75	30 to 60% of mass 95
95	Base Peak, 100% Relative Abundance
96	5 to 9% of mass 95
173	<2% of mass 174
174	>50% of mass 95
175	5 to 9% of mass 174
176	>95% but< 101% of mass 174
177	5 to 9% of mass 176

TABLE 5. COMPENDIUM METHOD TO-14A RESPONSE FACTORS (ppbv/area count) AND EXPECTED RETENTION TIME FOR GC/MS/SIM ANALYTICAL CONFIGURATION

Compounds	Response Factor (ppbv/area count)	Expected Retention Time (minutes)
Freon 12	0.6705	5.01
Methyl chloride	4.093	5.64
Freon 114	0.4928	6.55
Vinyl chloride	2.343	6.71
Methyl bromide	2.647	7.83
Ethyl chloride	2.954	8.43
Freon 11	0.5145	9.87
Vinylidene chloride	1.037	10.93
Dichloromethane	2.255	11.21
Trichlorotrifluoroethane	0.9031	11.60
1,1-Dichloroethane	1.273	12.50
cis-1,2-Dichloroethylene	1.363	13.40
Chloroform	0.7911	13.75
1,2-Dichloroethane	1.017	14.39
Methyl chloroform	0.7078	14.62
Benzene	1.236	15.04
Carbon tetrachloride	0.5880	15.18
1,2-Dichloropropane	2.400	15.83
Trichloroethylene	1.383	16.10
cis-1,3-Dichloropropene	1.877	16.96
trans-1,3-Dichloropropene	1.338	17.49
1,1,2-Trichloroethane	1.891	17.61
Toluene	0.9406	17.86
1,2-Dibromoethane (EDB)	0.8662	18.48
Tetrachloroethylene	0.7357	19.01
Chlorobenzene	0.8558	19.73
Ethylbenzene	0.6243	20.20
m,p-Xylene	0.7367	20.41
Styrene	1.888	20.80
1,1,2,2-Tetrachloroethane	1.035	20.92
o-Xylene	0.7498	20.92
4-Ethyltoluene	0.6181	22.53
1,3,5-Trimethylbenzene	0.7088	22.65
1,2,4-Trimethylbenzene	0.7536	23.18
m-Dichlorobenzene	0.9643	23.31
Benzyl chloride	1.420	23.32
p-Dichlorobenzene	0.8912	23.41
o-Dichlorobenzene	1.004	23.88
1,2,4-Trichlorobenzene	2.150	26.71
Hexachlorobutadiene	0.4117	27.68

TABLE 6. COMPENDIUM METHOD TO-14A
GC/MS/SIM CALIBRATION TABLE
*** External Standard ***

Operator: JDP 8 Jan 97 10:02 am
Sample Info: SYR 1
Misc Info:
Integration File Name: DATA:SYR2AO2A.I

Sequence Index: 1 Bottle Number: 2
Last Update: 8 Jan 87 8:13 am
Reference Peak Window: 5.00 Absolute Minutes
Non-Reference Peak Window: 0.40 Absolute Minutes
Sample Amount: 0.000 Uncalibrated Peak RF: 0.000 Multiplier: 1.667

Peak No.	Type	Int Type	Ret Time	Signal Description			Compound Name	Area	Amount	
1	1	PP	5.020	Mass	85.00	amu	FREON 12	12893	4011	pptv
2	1	PP	5.654	Mass	50.00	amu	METHYLCHLORI	4445	2586	pptv
3	1	BP	6.525	Mass	85.00	amu	FREON 114	7067	1215	pptv
4	1	PB	6.650	Mass	62.00	amu	VINYLCHLORID	2892	1929	pptv
5	1	BP	7.818	Mass	94.00	amu	METHYLBROMID	2401	1729	pptv
6	1	BB	8.421	Mass	64.00	amu	ETHYLCHLORID	2134	2769	pptv
7	1	BV	9.940	Mass	101.00	amu	FREON 11	25069	6460	pptv
8	1	BP	10.869	Mass	61.00	amu	VINDENECHLOR	5034	1700	pptv
9	1	BP	11.187	Mass	49.00	amu	DICHLOROMETH	4803	2348	pptv
10	1	PP	11.225	Mass	41.00	amu	ALLYCHLORID	761	8247	pptv
11	1	BP	11.578	Mass	151.00	amu	3CHL3FLUETHA	5477	1672	pptv
12	1	BP	12.492	Mass	63.00	amu	1,1DICHLOETH	5052	1738	pptv
13	1	VP	13.394	Mass	61.00	amu	c-1,2DICHLET	4761	1970	pptv
14	1	PH	13.713	Mass	83.00	amu	CHLOROFORM	5327	1678	pptv
15	1	BP	14.378	Mass	62.00	amu	1,2DICHLETHA	5009	2263	pptv
16	1	PB	14.594	Mass	97.00	amu	METHCHLOROFO	6656	2334	pptv
17	1	VP	15.009	Mass	78.00	amu	BENZENE	8352	2167	pptv
18	1	VP	15.154	Mass	117.00	amu	CARBONTETRAC	5888	1915	pptv
19	1	BB	15.821	Mass	63.00	amu	1,2DICHLPROP	3263	1799	pptv
20	1	BB	16.067	Mass	130.00	amu	TRICHLETHENE	4386	2109	pptv
21	1	PB	16.941	Mass	75.00	amu	c-1,3DICHLPR	2228	987.3	pptv
22	1	BP	17.475	Mass	75.00	amu	t-1,3DICHLPR	1626	689.2	pptv
23	1	BB	17.594	Mass	97.00	amu	1,1-2CHLETHA	2721	1772	pptv
24	1	BV	17.844	Mass	91.00	amu	TOLUENE	14417	2733	pptv
25	1	PB	18.463	Mass	107.00	amu	EDB	4070	1365	pptv
26	1	PH	18.989	Mass	166.00	amu	TETRACHLETHE	6874	2065	pptv
27	1	PB	19.705	Mass	112.00	amu	CHLOROBENZEN	5648	1524	pptv
28	1	BP	20.168	Mass	91.00	amu	ETHYLBENZENE	11084	1842	pptv
29	1	PB	20.277	Mass	91.00	amu	m,p-XYLENE	17089	1799	pptv

TABLE 6. (continued)

Peak No.	Type	Int Type	Ret Time	Signal Description		Compound Name	Area	Amount	
30	I	BV	20.778	Mass	104.00 amu	STYRENE	3145	1695	pptv
31	I	BH	20.887	Mass	83.00 amu	TETRACHLETHA	4531	1376	pptv
32	I	BP	20.892	Mass	91.00 amu	o-XYLENE	9798	2010	pptv
33	I	VV	22.488	Mass	105.00 amu	4-ETHYLTOLUE	7694	1481	pptv
34	I	VB	22.609	Mass	105.00 amu	1,3,5METHBEN	6781	1705	pptv
35	I	BB	23.144	Mass	105.00 amu	1,2,4METHBEN	7892	2095	pptv
36	I	BV	23.273	Mass	146.00 amu	m-DICHLBENZE	3046	1119	pptv
37	I	VV	23.279	Mass	91.00 amu	BENZYLCHLORI	3880	1006	pptv
38	I	VB	23.378	Mass	146.00 amu	p-DICHLBENZE	6090	2164	pptv
39	I	BP	23.850	Mass	146.00 amu	o-DICHLBENZE	2896	1249	pptv
40	I	BB	26.673	Mass	180.00 amu	1,2,4CHLBENZ	562	767.1	pptv
41	I	BB	27.637	Mass	225.00 amu	HEXACHLBUTAD	6309	1789	pptv

TABLE 7. COMPENDIUM METHOD TO-14A TYPICAL RETENTION TIME (MIN) AND CALIBRATION RESPONSE FACTORS (ppbv/area count) FOR TARGETED VOCs ASSOCIATED WITH FID AND ECD ANALYTICAL SYSTEM

			FID	ECD
Peak No.[1]	Compound	Retention Time (RT), minutes	Response Factor, (RF) (ppbv/area count)	Response Factor (ppbv/area count x 10^{-3})
1	Freon 12	3.65	3.465	13.89
2	Methyl chloride	4.30	0.693	
3	Freon 114	5.13	0.578	22.32
4	Vinyl chloride	5.28	0.406	
5	Methyl bromide	6.44		26.34
6	Ethyl chloride	7.06	0.413	
7	Freon 11	8.60	6.367	1.367
8	Vinylidene chloride	9.51	0.347	
9	Dichloromethane	9.84	0.903	
10	Trichlorotrifluoroethane	10.22	0.374	3.955
11	1,1-Dichloroethane	11.10	0.359	
12	cis-1,2-Dichloroethylene	11.99	0.368	
13	Chloroform	12.30	1.059	11.14
14	1,2-Dichloroethane	12.92	0.409	
15	Methyl chloroform	13.12	0.325	3.258
16	Benzene	13.51	0.117	
17	Carbon tetrachloride	13.64	1.451	1.077
18	1,2-Dichloropropane	14.26	0.214	
19	Trichloroethylene	14.50	0.327	8.910
20	cis-1,3-Dichloropropene	15.31		
21	trans-1,3-Dichloropropene	15.83		
22	1,1,2-Trichloroethane	15.93	0.336	
23	Toluene	16.17	0.092	
24	1,2-Dibromoethane (EDB)	16.78	0.366	5.137
25	Tetrachloroethylene	17.31	0.324	1.449
26	Chlorobenzene	18.03	0.120	
27	Ethylbenzene	18.51	0.092	
28	m,p-Xylene	18.72	0.095	
29	Styrene	19.12	0.143	
30	1,1,2,2-Tetrachloroethane	19.20		9.856
31	o-Xylene	19.23		
32	4-Ethyltoluene	20.82	0.100	
33	1,3,5-Trimethylbenzene	20.94	0.109	
34	1,2,4-Trimethylbenzene	21.46	0.111	
35	m-Dichlorobenzene	21.50		
36	Benzyl chloride	21.56		
37	p-Dichlorobenzene	21.67	0.188	
38	o-Dichlorobenzene	22.12	0.188	
39	1,2,4-Trichlorobenzene	24.88	0.667	
40	Hexachlorobutadiene	25.82	0.305	1.055

[1]Refer to Figures 15 and 16 for peak location.

TABLE 8. TYPICAL RETENTION TIME (minutes) FOR SELECTED ORGANICS USING GC/FID/ECD/PID ANALYTICAL SYSTEM FOR COMPENDIUM METHOD TO-14A[1]

Compound	Retention Time (minutes)		
	FID	ECD	PID
Acetylene	2.984	--	--
1,3-Butadiene	3.599	--	3.594
Vinyl chloride	3.790	--	3.781
Chloromethane	5.137	--	--
Chloroethane	5.738	--	--
Bromoethane	8.154	--	--
Methylene Chloride	9.232	--	9.218
trans-1,2-Dichloroethane	10.077	--	10.065
1,1-Dichloroethane	11.190	--	--
Chloroprene	11.502	--	11.491
Perfluorobenzene	13.077	13.078	13.069
Bromochloromethane	13.397	13.396	13.403
Chloroform	13.768	13.767	13.771
1,1,1-Trichloroethane	14.151	14.153	14.158
Carbon Tetrachloride	14.642	14.667	14.686
Benzene/1,2-Dichloroethane	15.128	--	15.114
Perfluorotoluene	15.420	15.425	15.412
Trichloroethylene	17.022	17.024	17.014
1,2-Dichloropropene	17.491	17.805	17.522
Bromodichloromethane	18.369	--	--
trans-1,3-Dichloropropylene	19.694	19.693	19.688
Toluene	20.658	--	20.653
cis-1,3-Dichloropropylene	21.461	21.357	21.357
1,1,2-Trichloroethane	21.823	--	--
Tetrachloroethylene	22.340	22.346	22.335
Dibromochloromethane	22.955	22.959	22.952
Chlorobenzene	24.866	--	24.861
m/p-Xylene	25.763	--	25.757
Styrene/o-Xylene	27.036	--	27.030
Bromofluorobenzene	28.665	28.663	28.660
1,1,2,2-Tetrachloroethane	29.225	29.227	29.228
m-Dichlorobenzene	32.347	32.345	32.342
p-Dichlorobenzene	32.671	32.669	32.666
o-Dichlorobenzene	33.885	33.883	33.880

[1]Varian® 3700 GC equipped with J & W Megabore® DB 624 Capillary Column (30 m x 0.53 I.D. mm) using helium carrier gas.

TABLE 9. GC/MS/SIM CALIBRATION TABLE FOR COMPENDIUM METHOD TO-14A

Last Update: 18 Dec 96 7:54 am
Reference Peak Window: 5.00 Absolute Minutes
Non-Reference Peak Window: 0.40 Absolute Minutes
Sample Amount: 0.000 Uncalibrated Peak RF: 0.000 Multiplier: 1.000

Ret Time	Pk#	Signal Description		Amt ppbv	Lvl	[Area]	Pk-Type	Partial Name
5.008	1	Mass	85.00 amu	13620	1	72974	1	FREON 12
5.690	2	Mass	50.00 amu	12720	1	36447	1	METHYLCHLORID
6.552	3	Mass	85.00 amu	8380	1	81251	1	FREON 114
6.709	4	Mass	62.00 amu	8050	1	20118	1	VINYLCHLORIDE
7.831	5	Mass	94.00 amu	12210	1	28265	1	METHYLBROMIDE
8.431	6	Mass	64.00 amu	12574	1	16149	1	ETHYLCHLORIDE
9.970	7	Mass	101.00 amu	12380	1	80088	1	FREON 11
10.927	8	Mass	61.00 amu	7890	1	38954	1	VINDENECHLORI
11.209	9	Mass	49.00 amu	12760	1	43507	1	DICHLOROMETHA
11.331	10	Mass	41.00 amu	12650	1	1945	1	ALLYLCHLORIDE
11.595	11	Mass	151.00 amu	7420	1	40530	1	3CHL3FLUETHAN
12.502	12	Mass	63.00 amu	12710	1	61595	1	1,1DICHLOETHA
13.403	13	Mass	61.00 amu	12630	1	50900	1	c-1,2DICHLETH
13.747	14	Mass	83.00 amu	7670	1	40585	1	CHLOROFORM
14.387	15	Mass	62.00 amu	9040	1	33356	1	1,2DICHLETHAN
14.623	16	Mass	97.00 amu	8100	1	38503	1	METHCHLOROFOR
15.038	17	Mass	78.00 amu	10760	1	69119	1	BENZENE
15.183	18	Mass	117.00 amu	8340	1	42737	1	CARBONTETRACH
15.829	19	Mass	63.00 amu	12780	1	38875	1	1,2DICHLPROPA
16.096	20	Mass	130.00 amu	8750	1	30331	1	TRICHLETHENE
16.956	21	Mass	75.00 amu	4540	1	17078	1	c-1,3DICHLPRO
17.492	22	Mass	75.00 amu	3380	1	13294	1	t-1,3DICHLPRO
17.610	23	Mass	97.00 amu	12690	1	32480	1	1,1-2CHLETHAN
17.862	24	Mass	91.00 amu	10010	1	88036	1	TOLUENE
18.485	25	Mass	107.00 amu	6710	1	33350	1	EDB
19.012	26	Mass	166.00 amu	7830	1	43454	1	TETRACHLETHEN
19.729	27	Mass	112.00 amu	7160	1	44224	1	CHLOROBENZENE
20.195	28	Mass	91.00 amu	12740	1	127767	1	ETHYLBENZENE
20.407	29	Mass	91.00 amu	25400	1	200973	1	m,p-XYLENE
20.806	30	Mass	104.00 amu	12390	1	38332	1	STYRENE
20.916	31	Mass	83.00 amu	11690	1	64162	1	TETRACHLETHAN
20.921	32	Mass	91.00 amu	11085	1	90096	1	o-XYLENE
22.528	33	Mass	105.00 amu	12560	1	108747	1	4-ETHYLTOLUEN
22.648	34	Mass	105.00 amu	12620	1	83666	1	1,3,5METHBENZ
23.179	35	Mass	105.00 amu	12710	1	79833	1	1,2,4METHBENZ
23.307	36	Mass	146.00 amu	12650	1	57409	1	m-DICHLBENZEN
23.317	37	Mass	91.00 amu	7900	1	50774	1	BENZYLCHLORID
23.413	38	Mass	146.00 amu	12390	1	58127	1	p-DICHLBENZEN
23.885	39	Mass	146.00 amu	13510	1	52233	1	o-DICHLBENZEN
26.714	40	Mass	180.00 amu	15520	1	18967	1	1,2,4CHLBENZE
27.680	41	Mass	225.00 amu	7470	1	43920	1	HEXACHLBUTADI

TABLE 10. (continued)

Internal Standards	R.T.	Qion	Response	Conc	Units	Dev(min)
1) BROMOCHLOROMETHANE	13.40	49	173440	4.80	PPBV	0.00
17) 1,4-DIFLUOROBENZENE	15.79	114	383363	4.80	PPBV	0.00
27) CHLOROBENZENE-D5	21.73	117	346909	4.80	PPBV	0.00
System Monitoring Compounds						%Recovery
15) 1,2-DICHLOROETHANE-D4	14.39	65	177334	4.82	PPBV	100.33%
28) TOLUENE-D8	19.07	98	393347	4.78	PPBV	99.62%
40) BROMOFLUOROBENZENE	24.01	95	310217	4.62	PPBV	95.94%
Target Compounds						Qvalue
2) Freon 12	5.17	85	295965	7.67	PPBV	99
3) Chloromethane	5.65	50	113926	7.96	PPBV #	100
4) Freon 114	5.94	85	376276	7.86	PPBV	97
5) Chloroethene	6.25	62	113201	8.60	PPBV	100
6) Bromomethane	7.26	94	106443	8.74	PPBV	96
7) Chloroethane	7.64	64	57451	7.48	PPBV	99
8) Freon 11	9.13	101	266209	7.77	PPBV	98
9) 1,1-Dichloroethene	10.21	61	186189	8.03	PPBV	99
10) Methylene Chloride	10.35	49	158173	6.40	PPBV	99
11) Freon 113	10.75	101	225115	7.85	PPBV	99
12) 1,1-Dichloroethane	12.05	63	212901	7.80	PPBV	99
13) cis-1,2-Dichloroethene	13.16	61	170091	8.55	PPBV	99
14) Chloroform	13.54	83	236380	8.15	PPBV	98
16) 1,2-Dichloroethane	14.53	62	144398	7.92	PPBV	100
18) 1,1,1-Trichloroethane	14.89	97	208233	7.72	PPBV	99
19) Benzene	15.51	78	329475	8.45	PPBV	100
20) Carbon Tetrachloride	15.70	117	215628	7.87	PPBV	99
21) 1,2-Dichloropropane	16.52	63	135206	7.80	PPBV	99
22) Bromodichloromethane	16.74	83	275403	8.98	PPBV	98
23) Trichloroethene	16.80	95	139564	7.76	PPBV	100
24) cis-1,3-Dichloropropene	17.84	75	97972	6.79	PPBV	98
25) trans-1,3-Dichloropropene	18.49	75	27910	1.61	PPBV	100
26) 1,1,2-Trichloroethane	18.81	97	120253	7.66	PPBV	98
29) Toluene	19.22	91	334990	7.69	PPBV	97
30) Dibromochloromethane	19.85	129	243321	8.35	PPBV	99
31) 1,2-Dibromoethane	20.23	107	173047	7.17	PPBV	100
32) Tetrachloroethene	20.81	166	145120	7.91	PPBV	99
33) Chlorobenzene	21.80	112	253435	7.80	PPBV	97
34) Ethylbenzene	22.28	91	454612	8.72	PPBV	99
35) m,p-Xylene	22.53	91	581168	12.91	PPBV	99
36) Bromoform	22.80	173	210707	8.71	PPBV	100
37) Styrene	23.09	104	133812	5.06	PPBV	99
38) 1,1,2,2-Tetrachloroethane	23.24	83	268481	6.70	PPBV	99
39) o-Xylene	23.28	91	257233	5.29	PPBV	100
41) 1,3,5-Trimethylbenzene	25.37	105	198466	4.39	PPBV	99
42) 1,2,4-Trimethylbenzene	26.15	105	160459	3.49	PPBV	99
43) Benzyl chloride	26.47	91	107854	6.40	PPBV	99
44) 1,3-Dichlorobenzene	26.55	146	186397	6.44	PPBV	99
45) 1,4-Dichlorobenzene	26.66	146	180374	6.04	PPBV	99
46) 1,2-Dichlorobenzene	27.36	146	164427	6.03	PPBV	99
47) 1,2,4-Trichlorobenzene	31.19	180	42255	2.96	PPBV	99
48) Hexachlorobutadiene	32.45	225	56763	3.47	PPBV	99

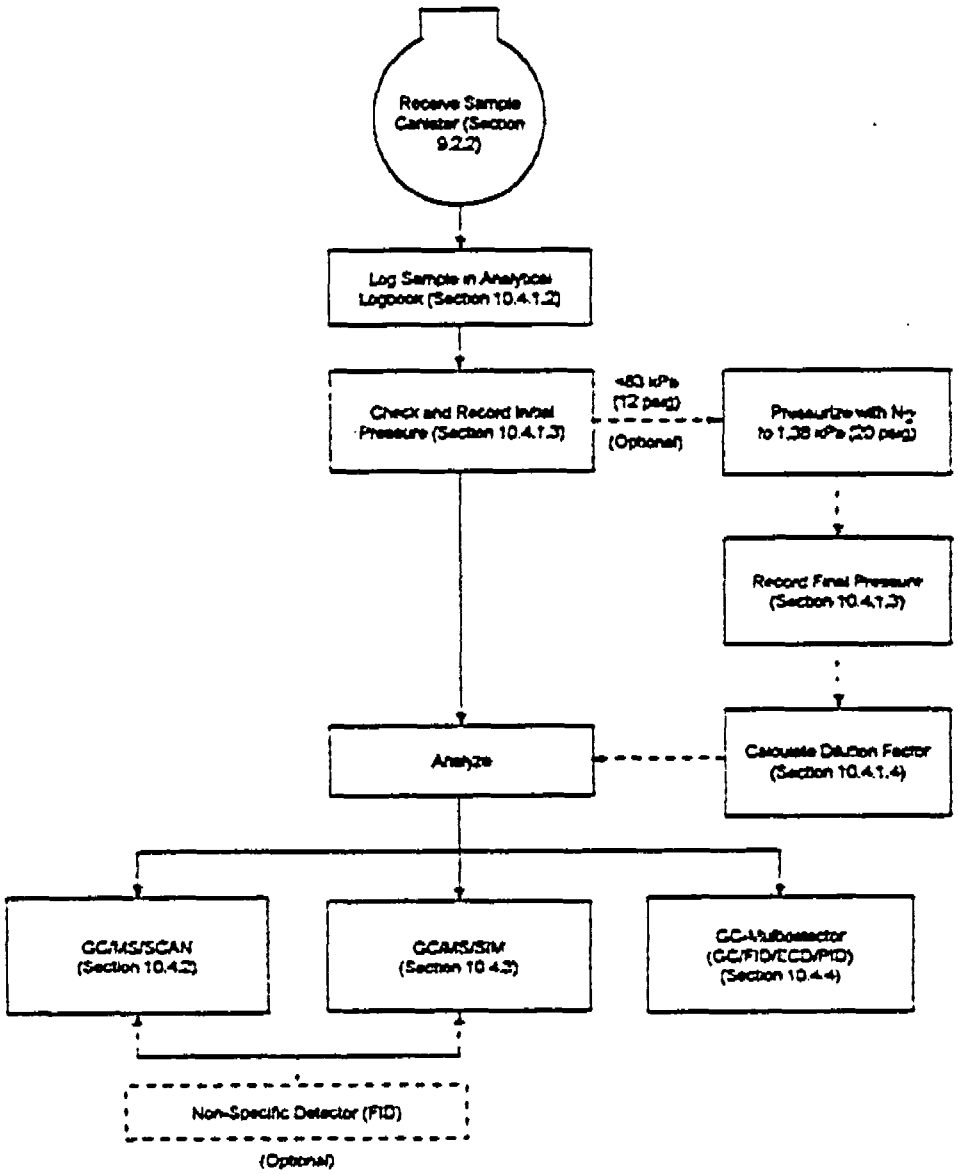

Figure 1. Analytical systems available for canister VOC identification and quantitation as part of Compendium Method TO-14A.

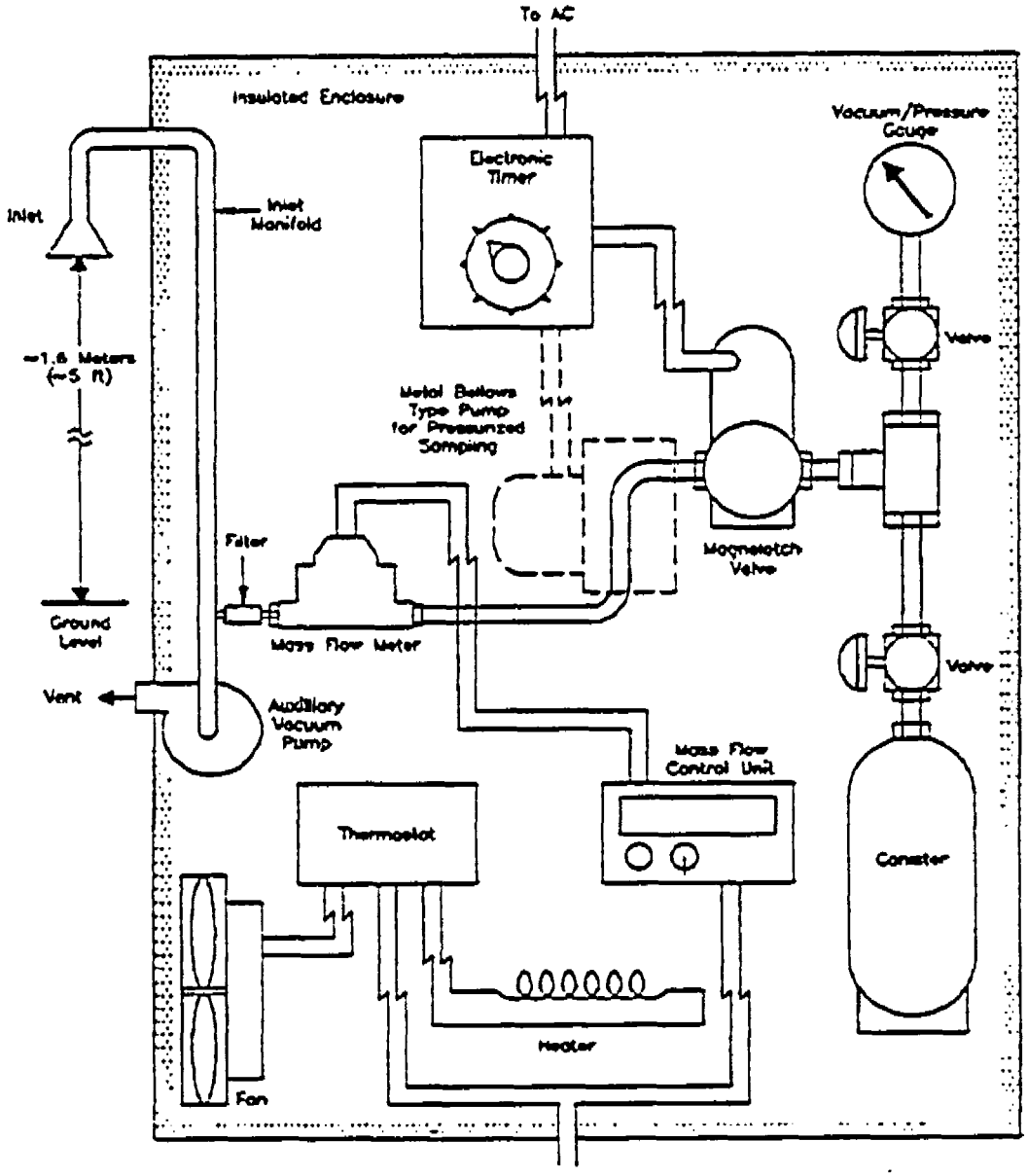

Figure 2. Example of sampler configuration for subatmospheric pressure or pressurized canister sampling used in Compendium Method TO-14A.

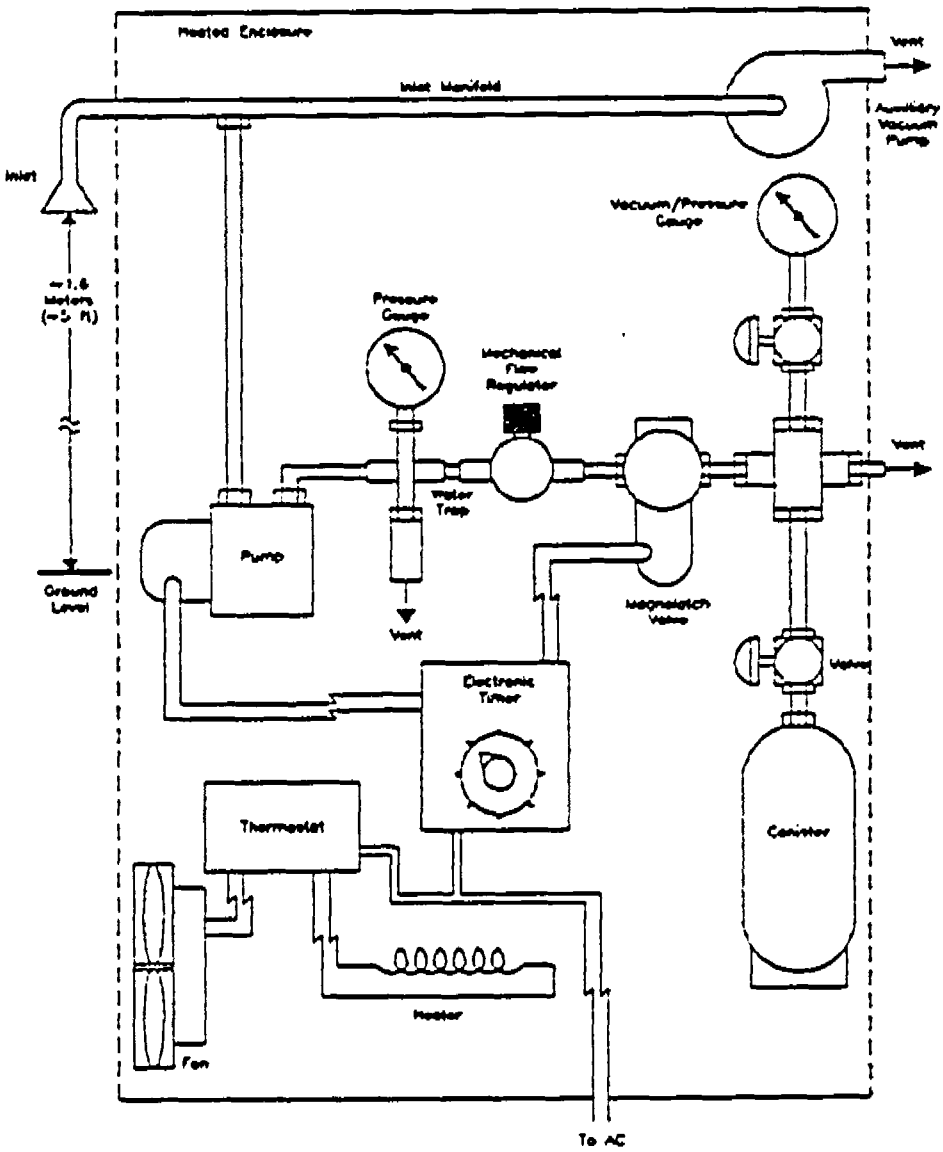

Figure 3. Example of alternative sampler configuration for pressurized canister sampling used in Compendium Method TO-14A.

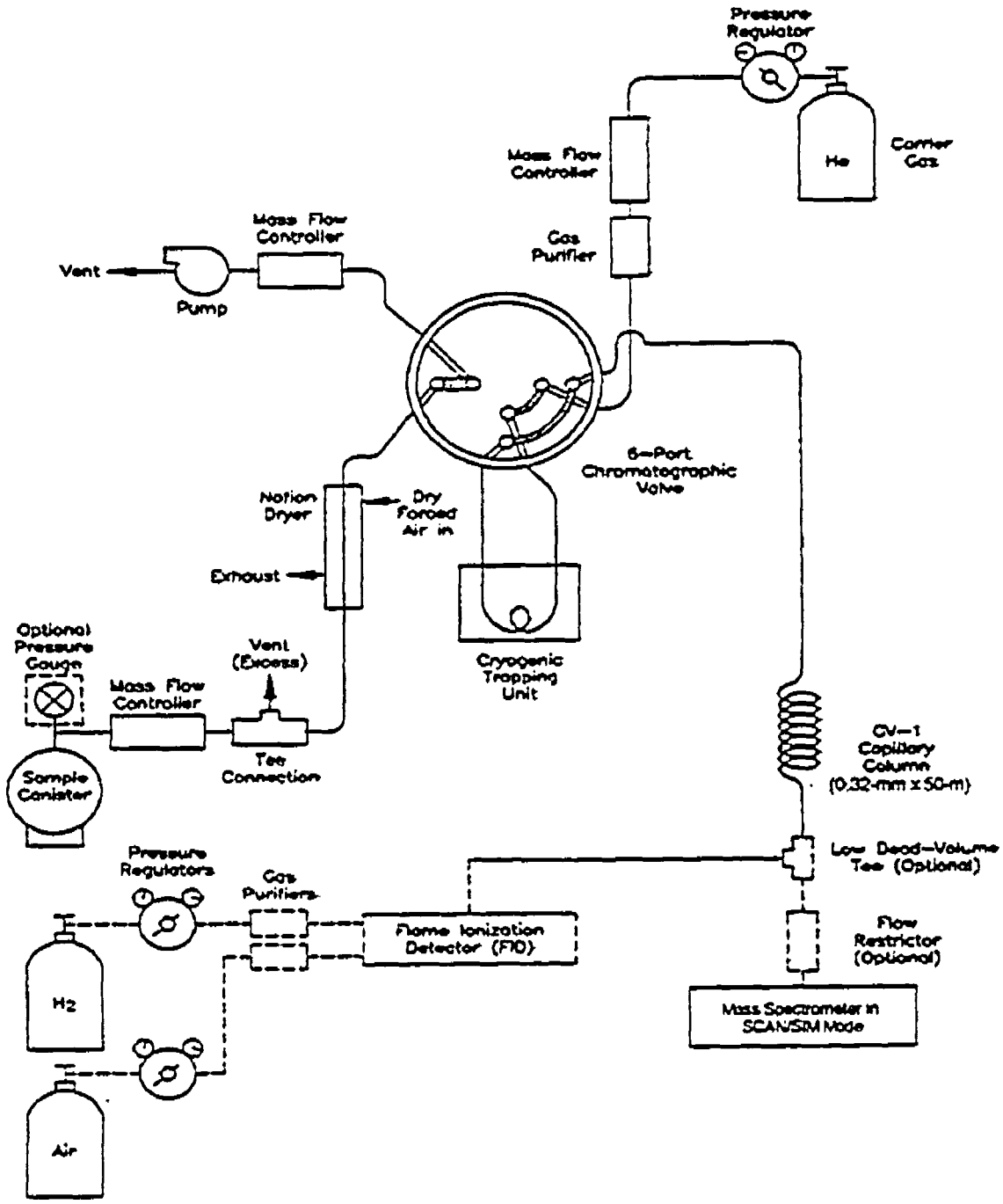

Figure 4. Compendium Method TO-14A canister analysis utilizing GC/MS/SCAN/SIM analytical system with optional FID with 6-port valve.

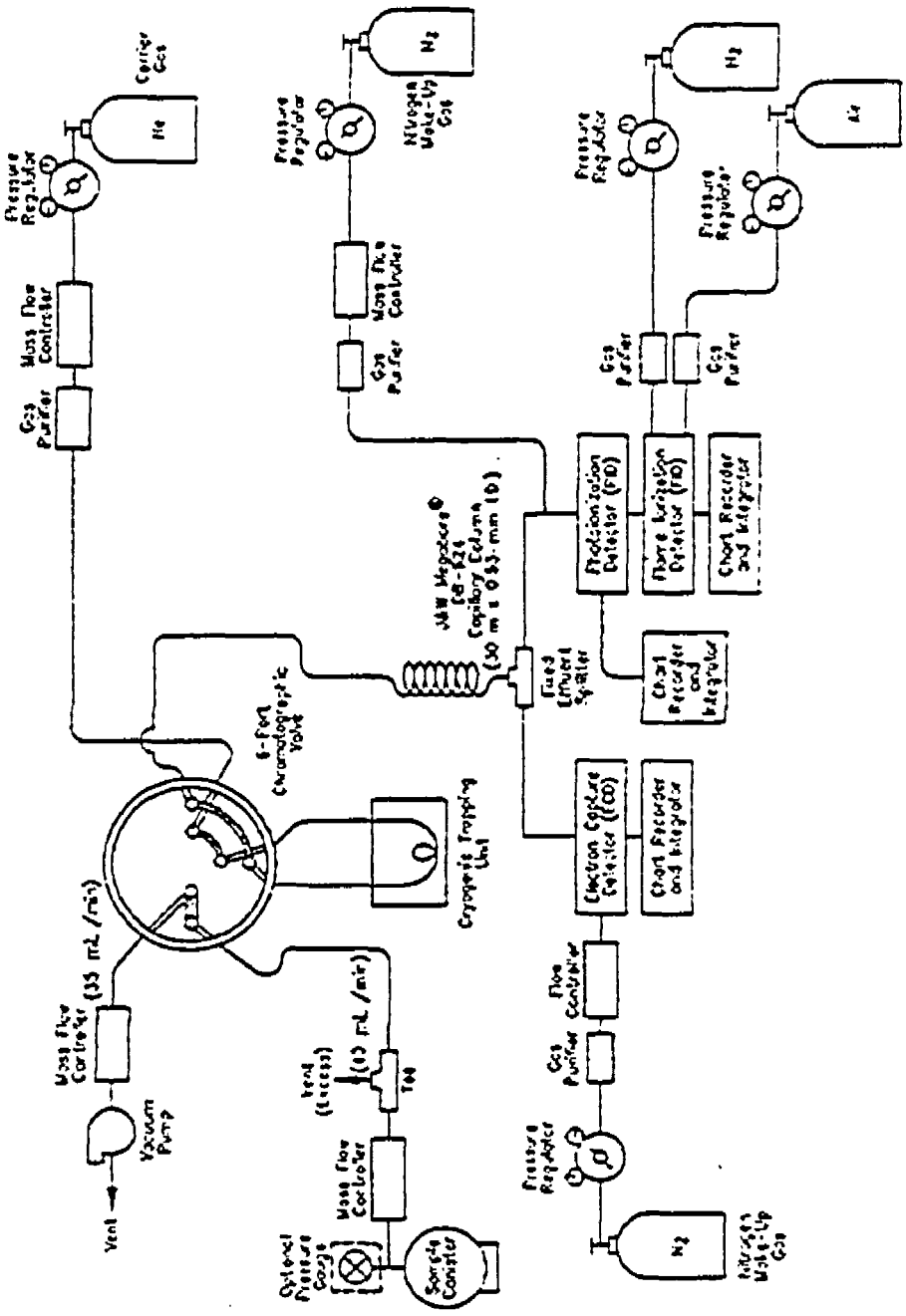

Figure 5. Compendium Method TO14A GC/FID/ECD Analytical System With the 6-Port Chromatographic Valve in the Sample Desorption Mode

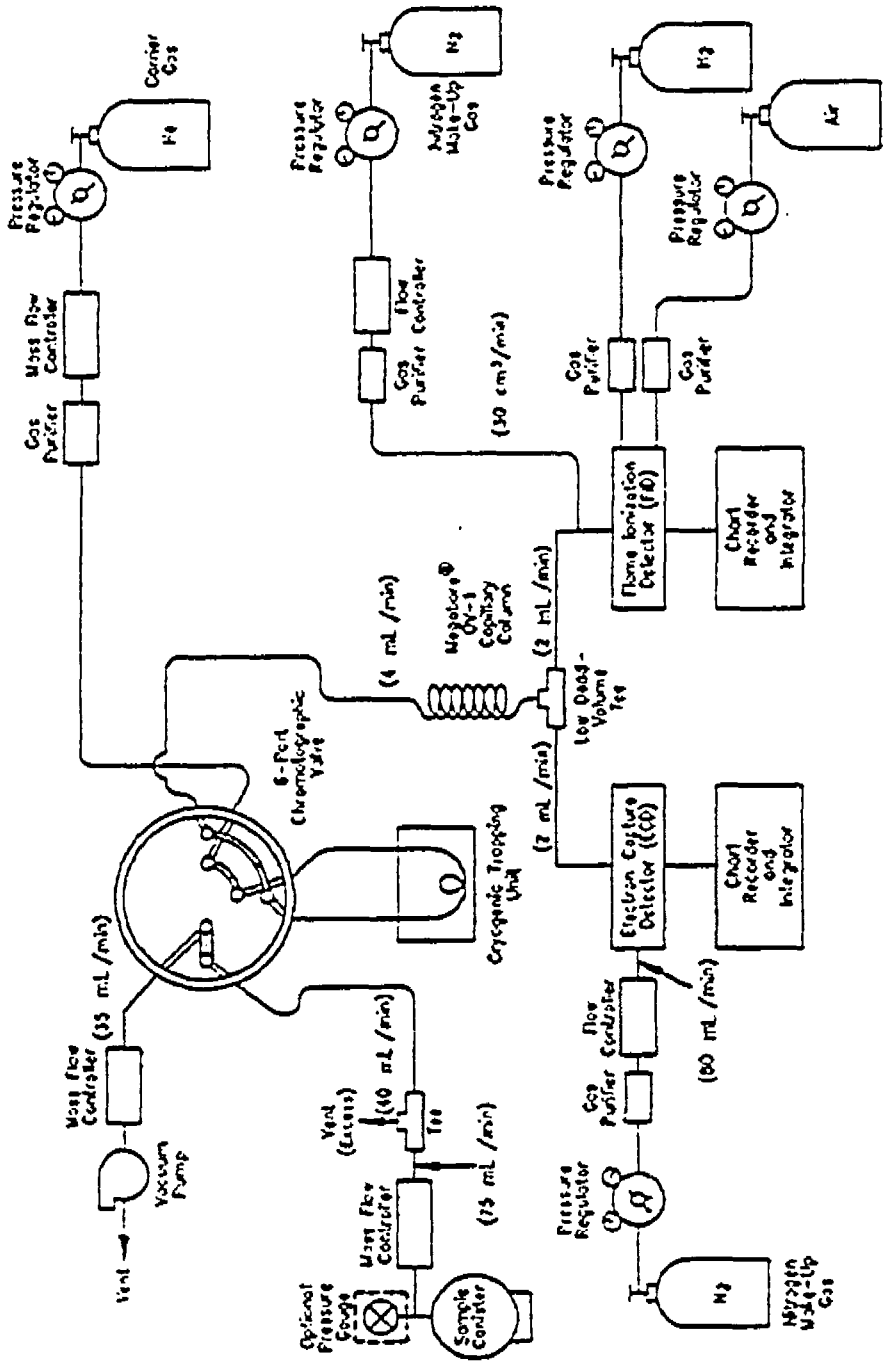

Figure 6. Compendium Method TO-14A system configuration associated with the GC/FID/ECD/FID analytical system with the 6-port chromatographic valve in the sample desorption mode.

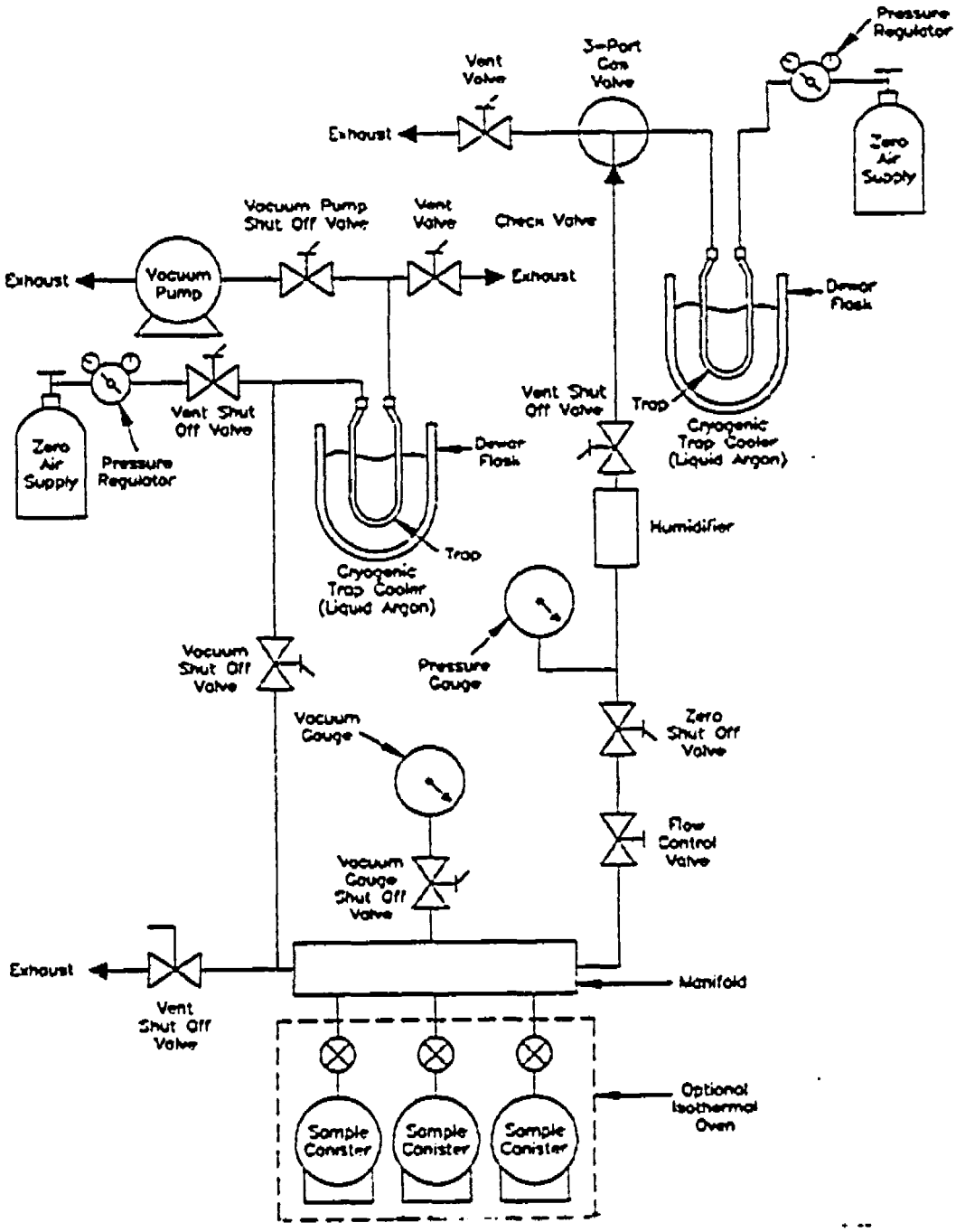

Figure 7. Compendium Method TO-14A canister cleaning system.

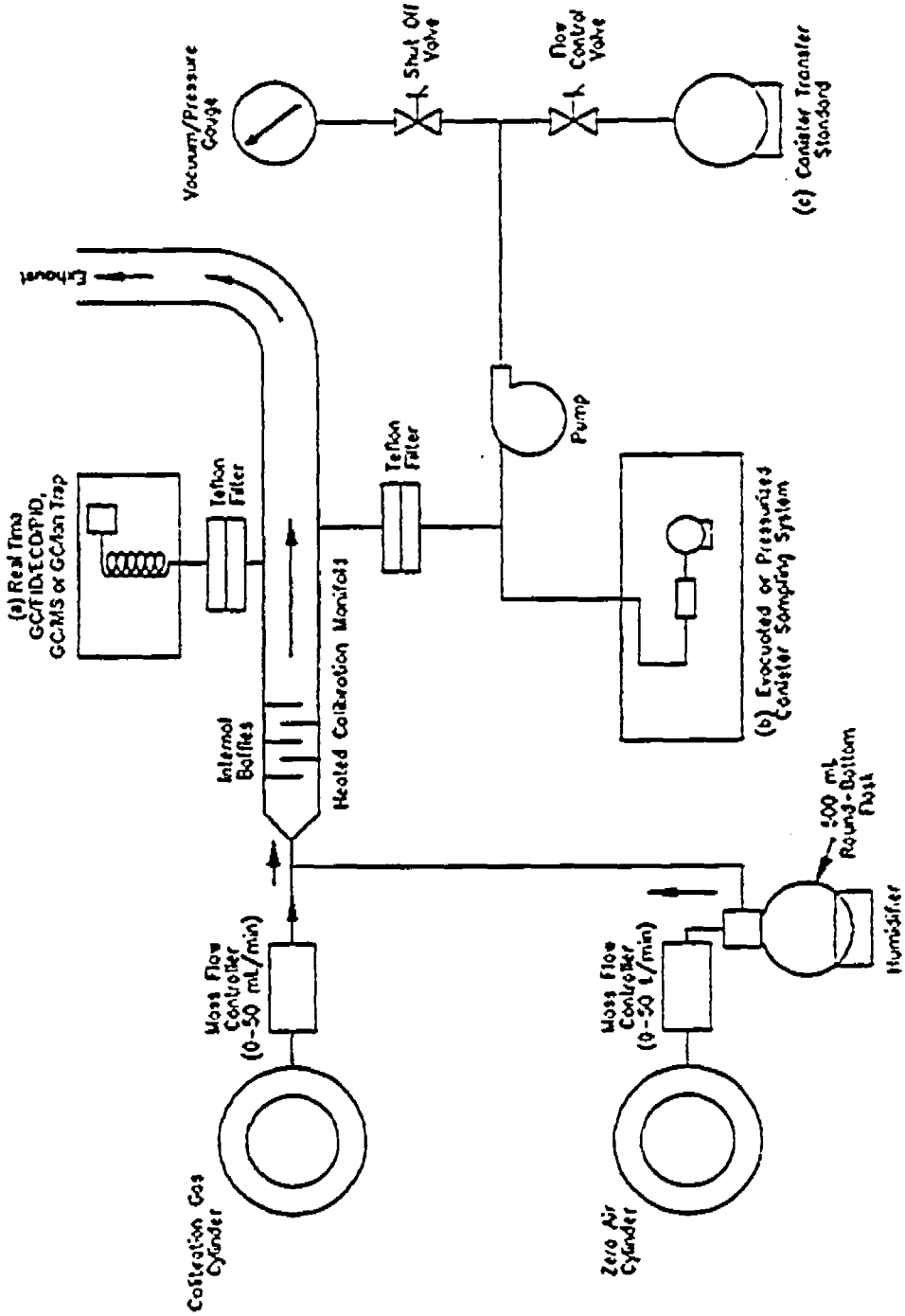

Figure 8. Compendium Method TO-14A schematic of calibration system and manifold for (a) analytical system calibration, (b) testing canister sampling system for (c) preparing canister transfer standards.

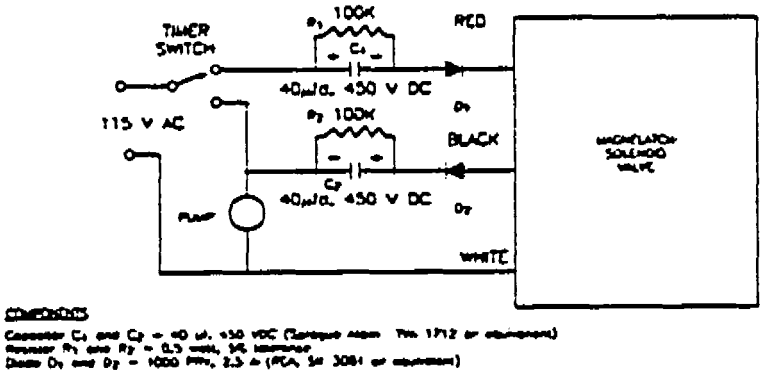

(a). Simple Circuit for Operating Magnelatch Valve

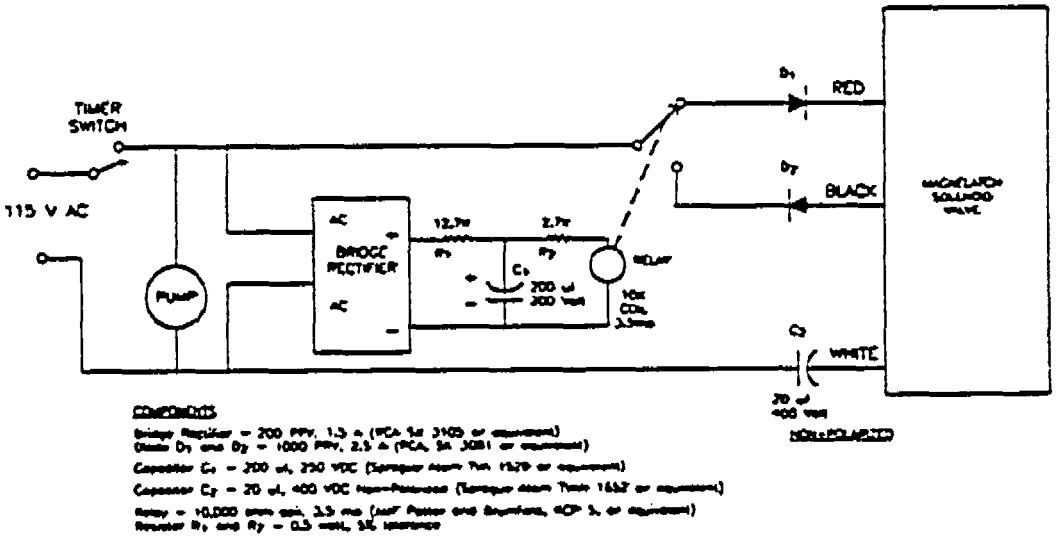

(b). Improved Circuit Designed to Handle Power Interruptions

Figure 9. Compendium Method TO-14A electrical pulse circuits for driving skinner magnelatch solenoid valve with a mechanical timer.

COMPENDIUM METHOD TO-14A
CANISTER FIELD TEST DATA SHEET

A. GENERAL INFORMATION

SITE LOCATION: _____

SITE ADDRESS: _____

_____

_____

SAMPLING DATE: _____

SHIPPING DATE: _____

CANISTER SERIAL NO.: _____

SAMPLER ID: _____

OPERATOR: _____

CANISTER LEAK CHECK DATE: _____

B. SAMPLING INFORMATION

	TEMPERATURE			
	INTERIOR	AMBIENT	MAXIMUM	MINIMUM
START				
STOP				

PRESSURE	
CANISTER PRESSURE	

	SAMPLING TIMES	
	LOCAL TIME	ELAPSED TIME METER READING
START		
STOP		

FLOW RATES		
MANIFOLD FLOW RATE	CANISTER FLOW RATE	FLOW CONTROLLER READOUT

SAMPLING SYSTEM CERTIFICATION DATE: _____

QUARTERLY RECERTIFICATION DATE: _____

C. LABORATORY INFORMATION

DATA RECEIVED: _____

INITIAL PRESSURE: _____

FINAL PRESSURE: _____

DILUTION FACTOR: _____

ANALYSIS

GC/FID/ECD DATE: _____

GC/MSD/SCAN DATE: _____

GC/MSD/SIM DATE: _____

RESULTS*: _____

_____

GC/FID/ECD: _____

GC/MSD/SCAN: _____

GC/MSD/SIM: _____

_____

SIGNATURE/TITLE

*ATTACH DATA SHEETS

Figure 10. Compendium Method TO-14A field test data sheet (FTDS).

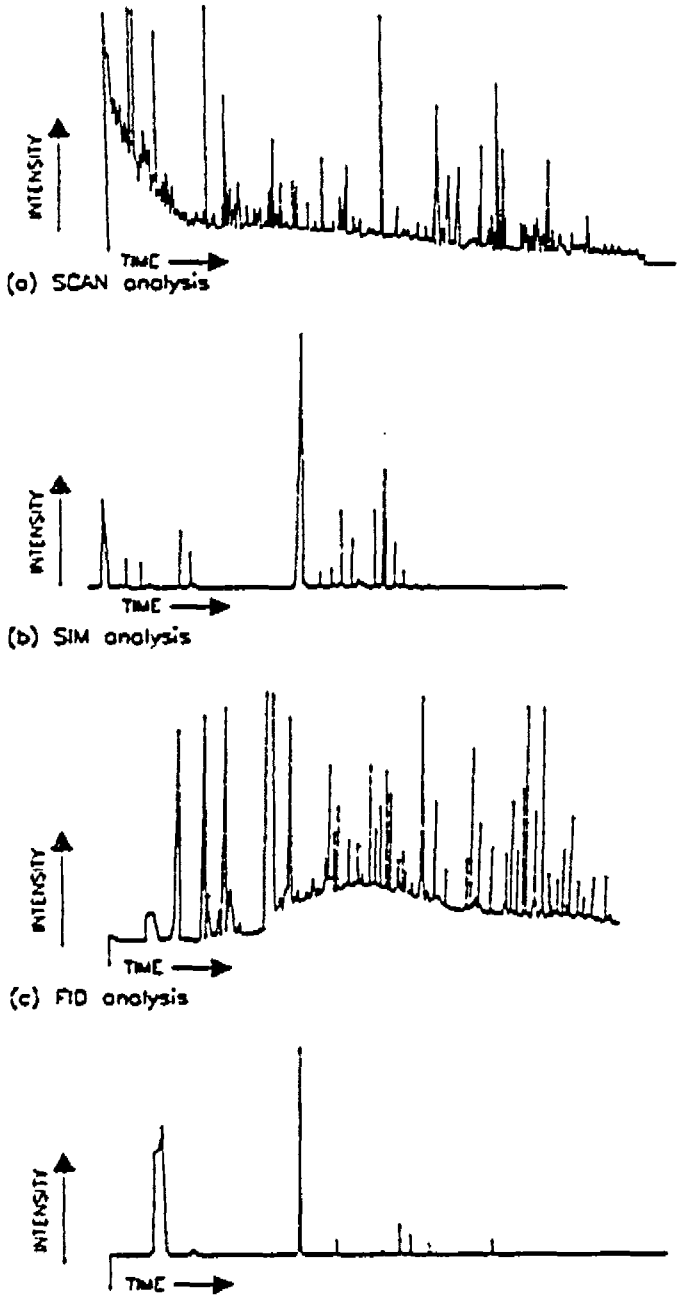

Figure 11. Compendium Method TO-14A typical chromatograms of a VOC sample analyzed by GC/MS/SCAN/SIM mode and GC-multidetector mode.

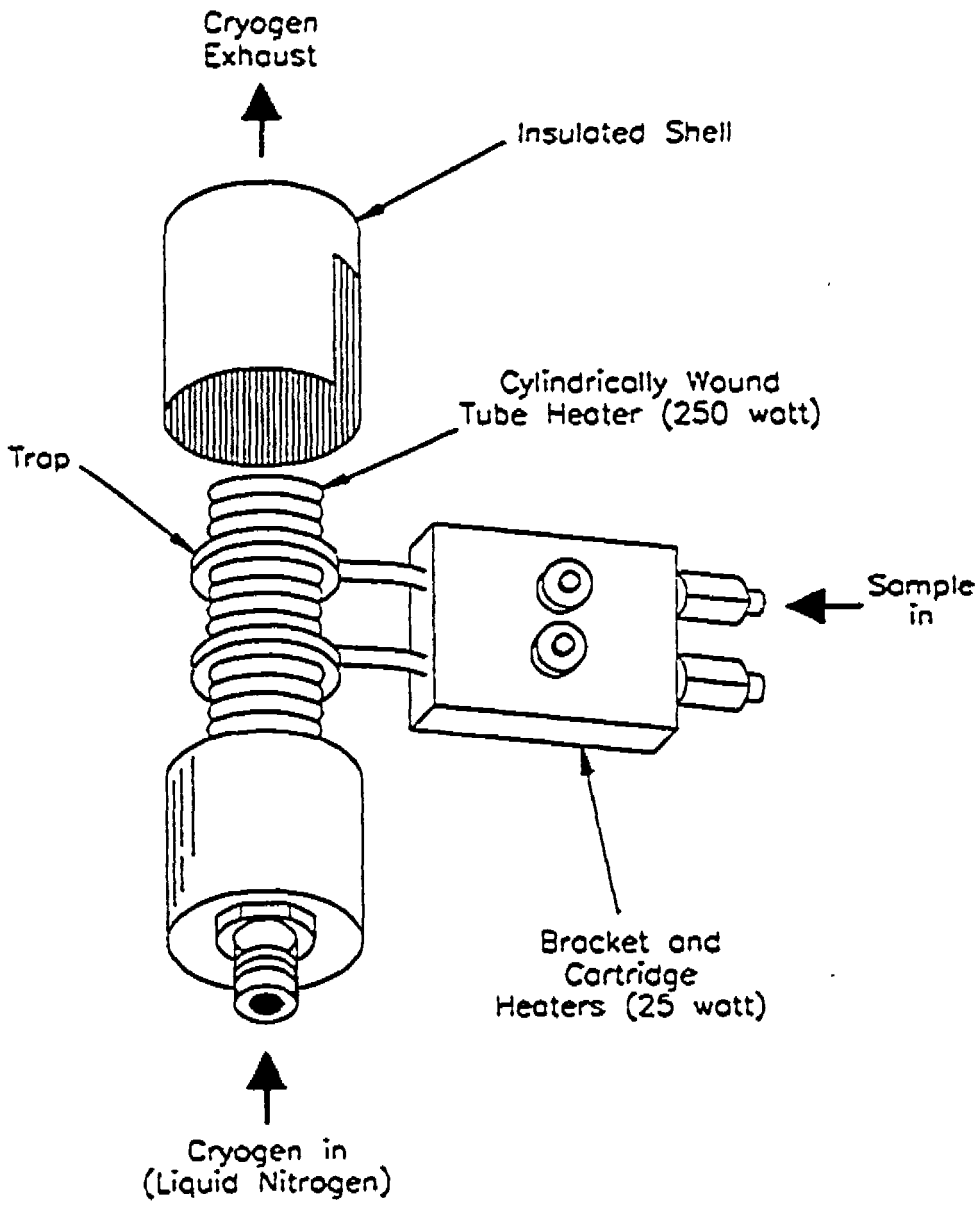

Figure 12. Example of Compendium Method TO-14A cryogenic trapping unit.

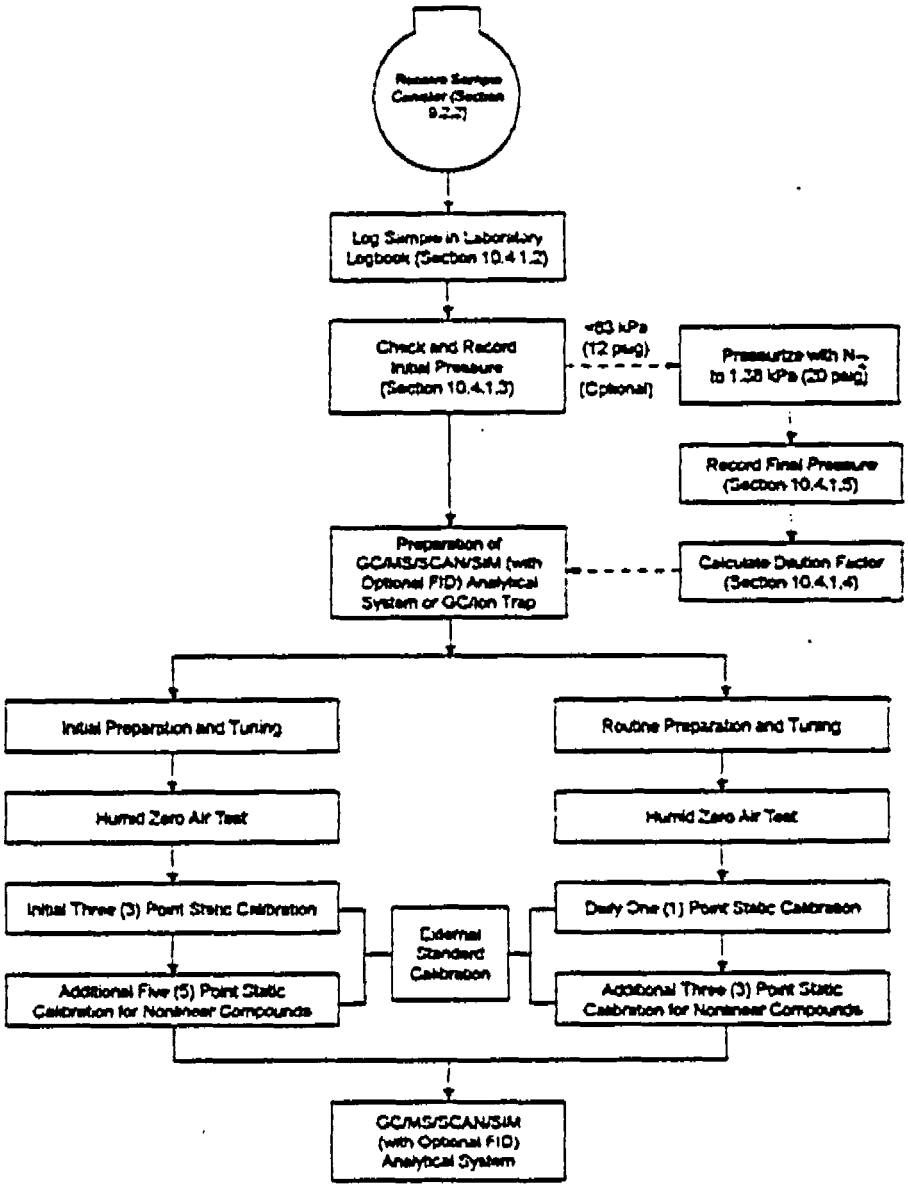

Figure 13. Compendium Method TO-14A flowchart of GC/MS/SCAN/SIM analytical system preparation (with optional FID system).

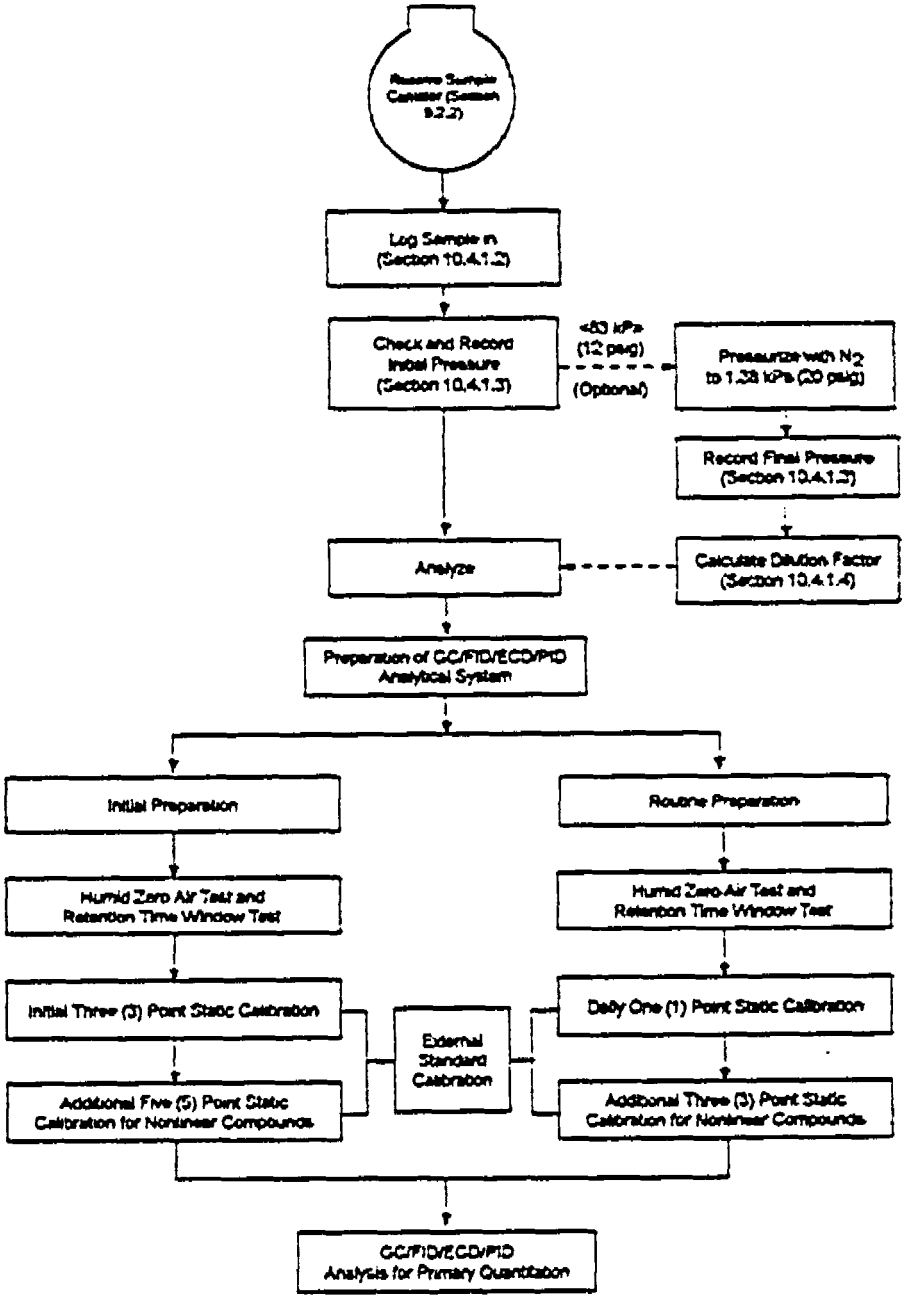

Figure 14. Compendium Method TO-14A flowchart of GC/FID/ECD/PID analytical system preparation.

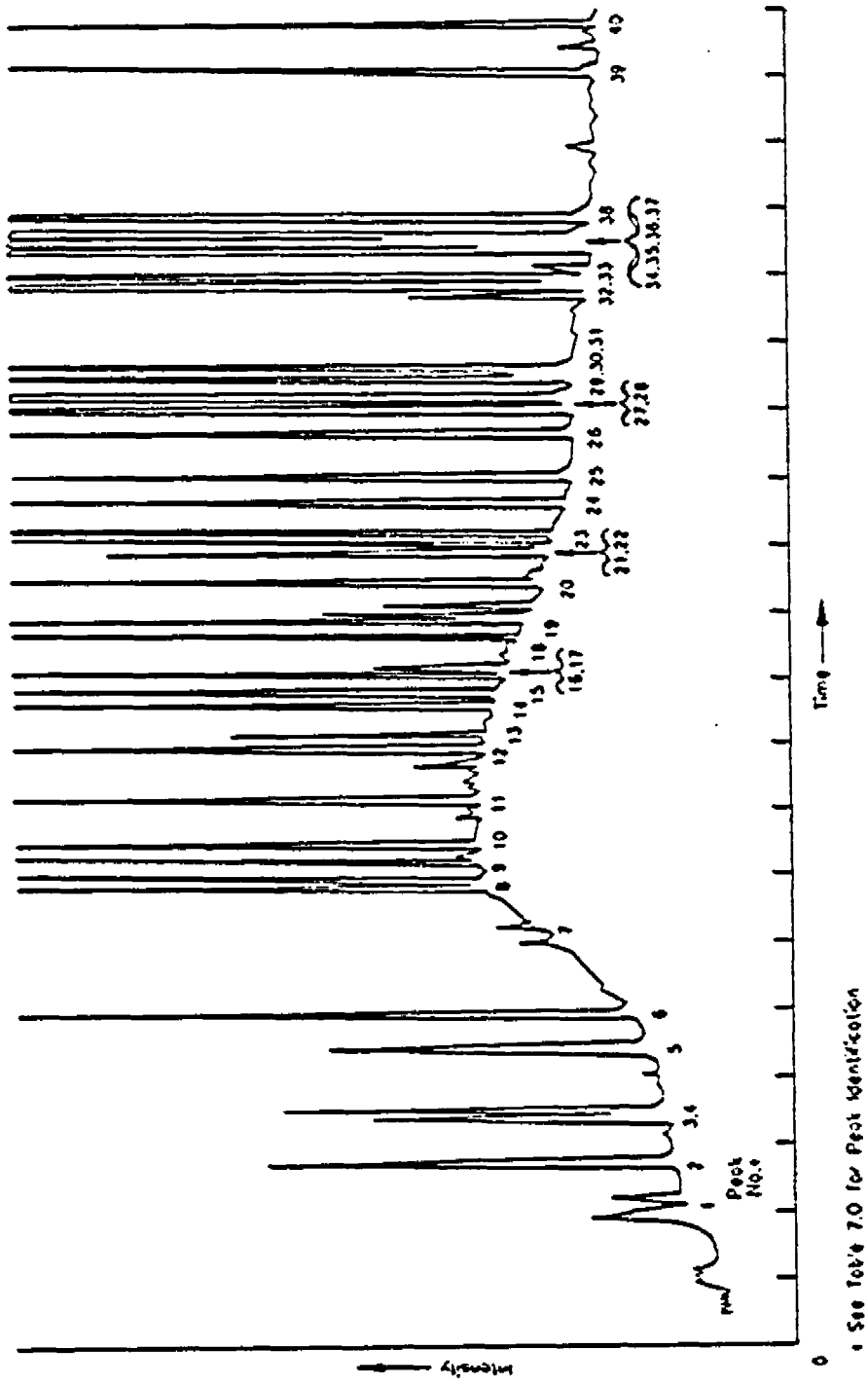

Figure 15. Typical FID response to selective VOCs using Compendium Method TO-14A.

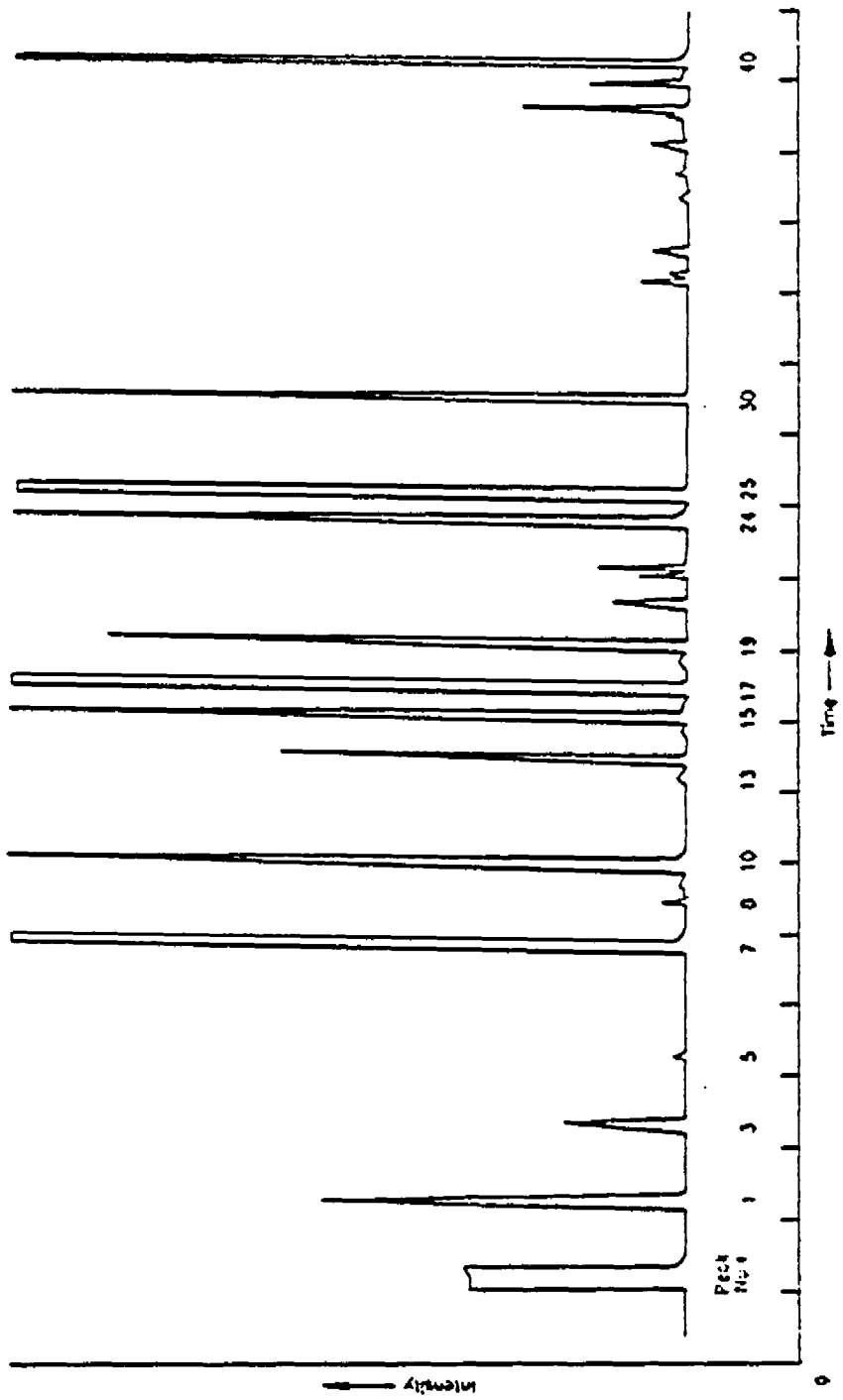

Figure 16. Typical ECD response to selective VOCs using Compendium Method TO-14A.

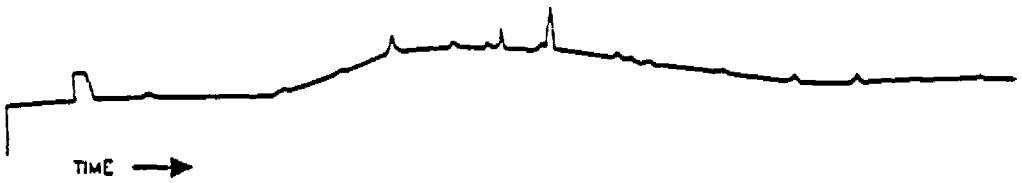

(a). Certified Sampler

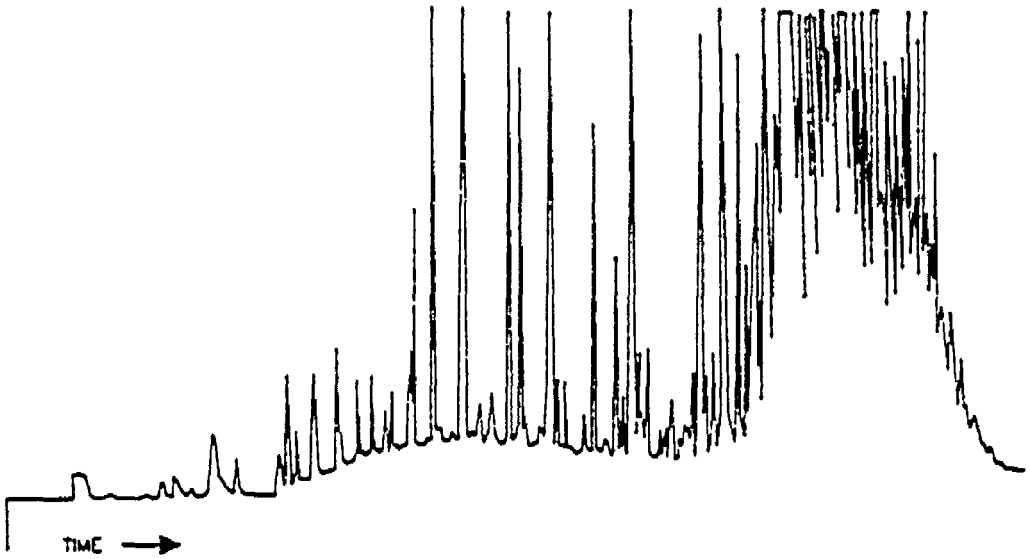

(b). Contaminated Sampler

Figure 17. Example of humid zero air test results for a clean sampler (a) and a contaminated sampler (b) used in Compendium Method TO-14A.

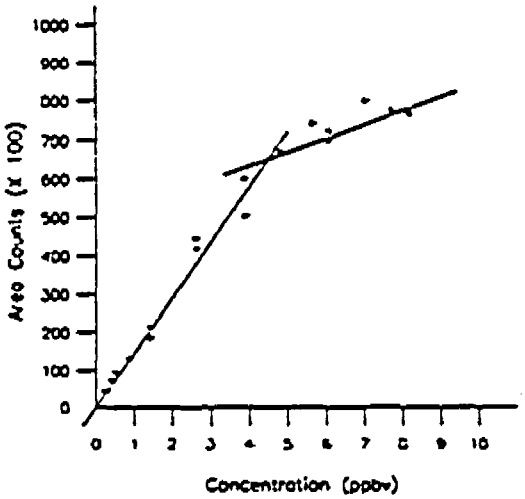

FIGURE 18(a). NONLINEAR RESPONSE OF TETRACHLOETHYLENE ON THE ECD

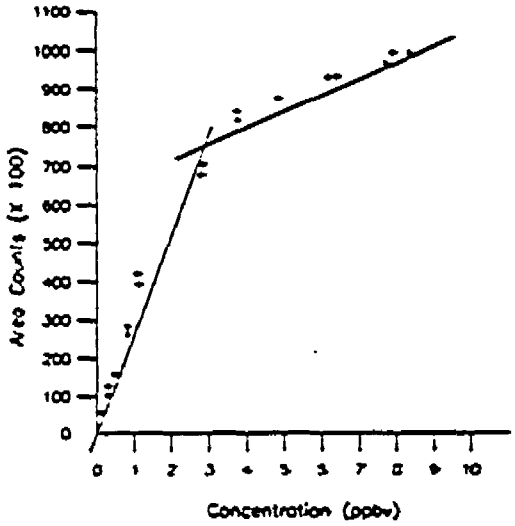

FIGURE 18(b). NONLINEAR RESPONSE OF CARBON TETRACHLORIDE ON THE ECD

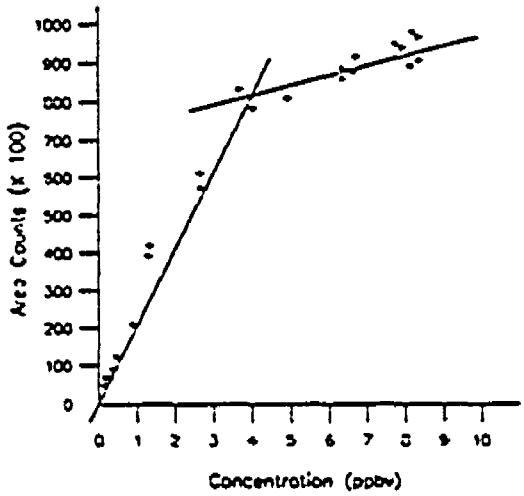

FIGURE 18(c). NONLINEAR RESPONSE OF HEXACHLOROBUTADIENE ON THE ECD

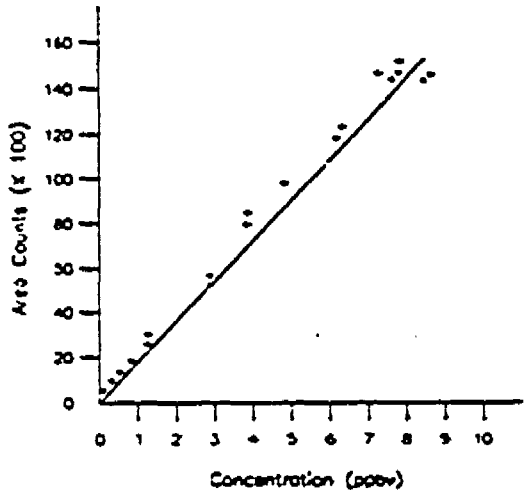

FIGURE 18(d). LINEAR RESPONSE OF CHLOROFORM ON THE ECD

Figure 18. Response of ECD to various VOCs as part of Compendium Method TO-14A.

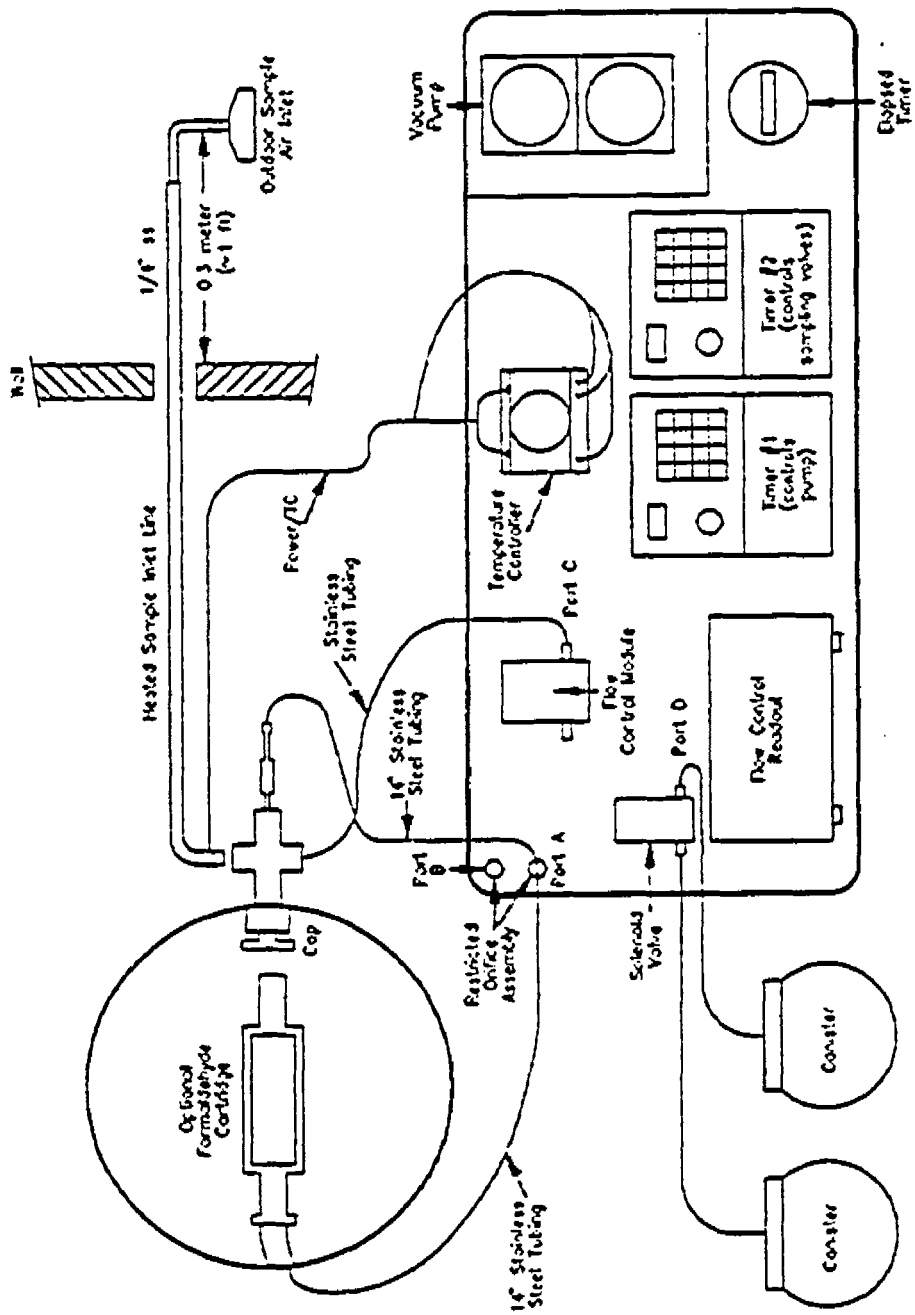

Figure 19. Example of sampler schematic used in EPA's UATMP.

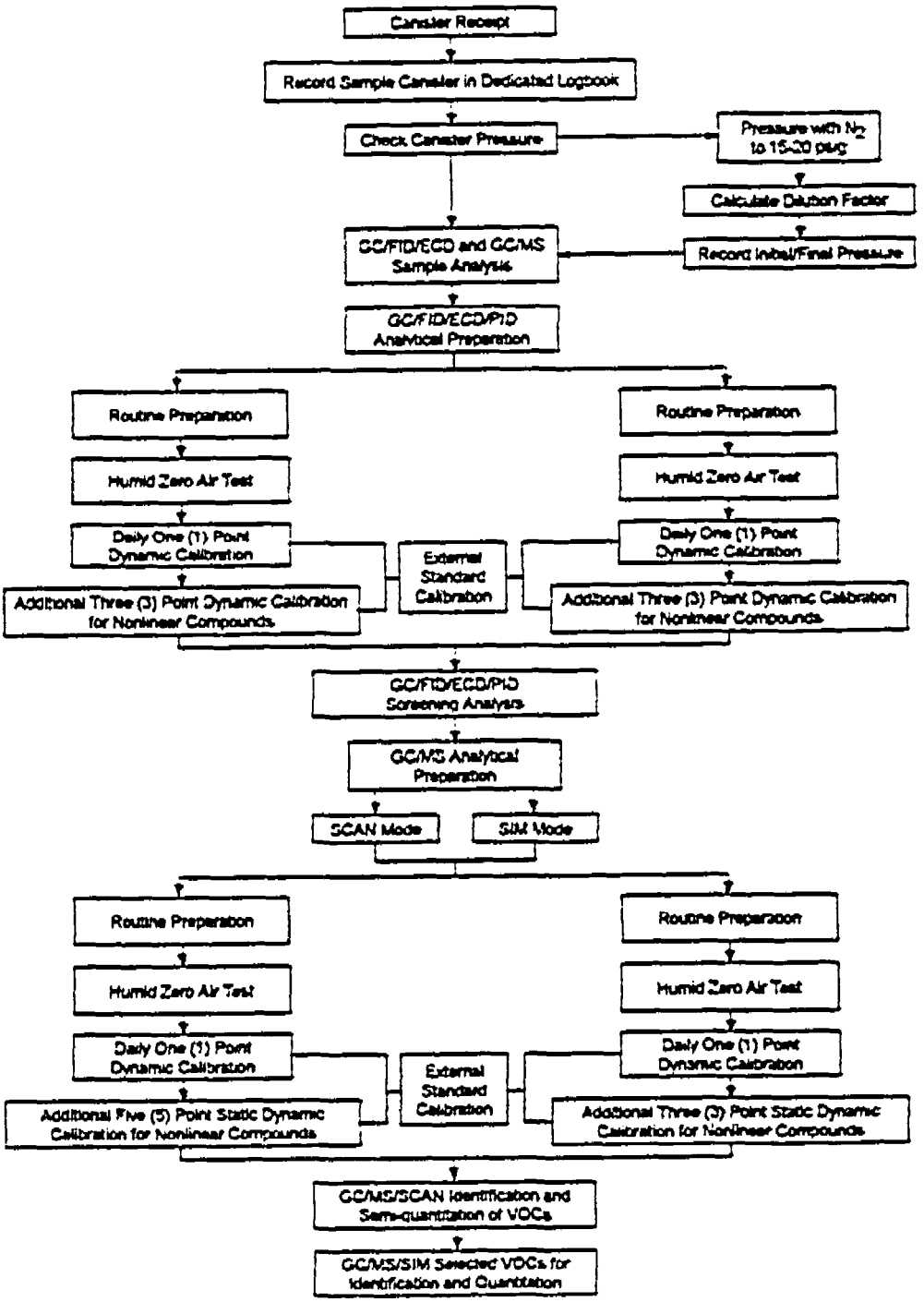

Figure 20. Flowchart of analytical systems preparation used in Compendium Method TO-14A.

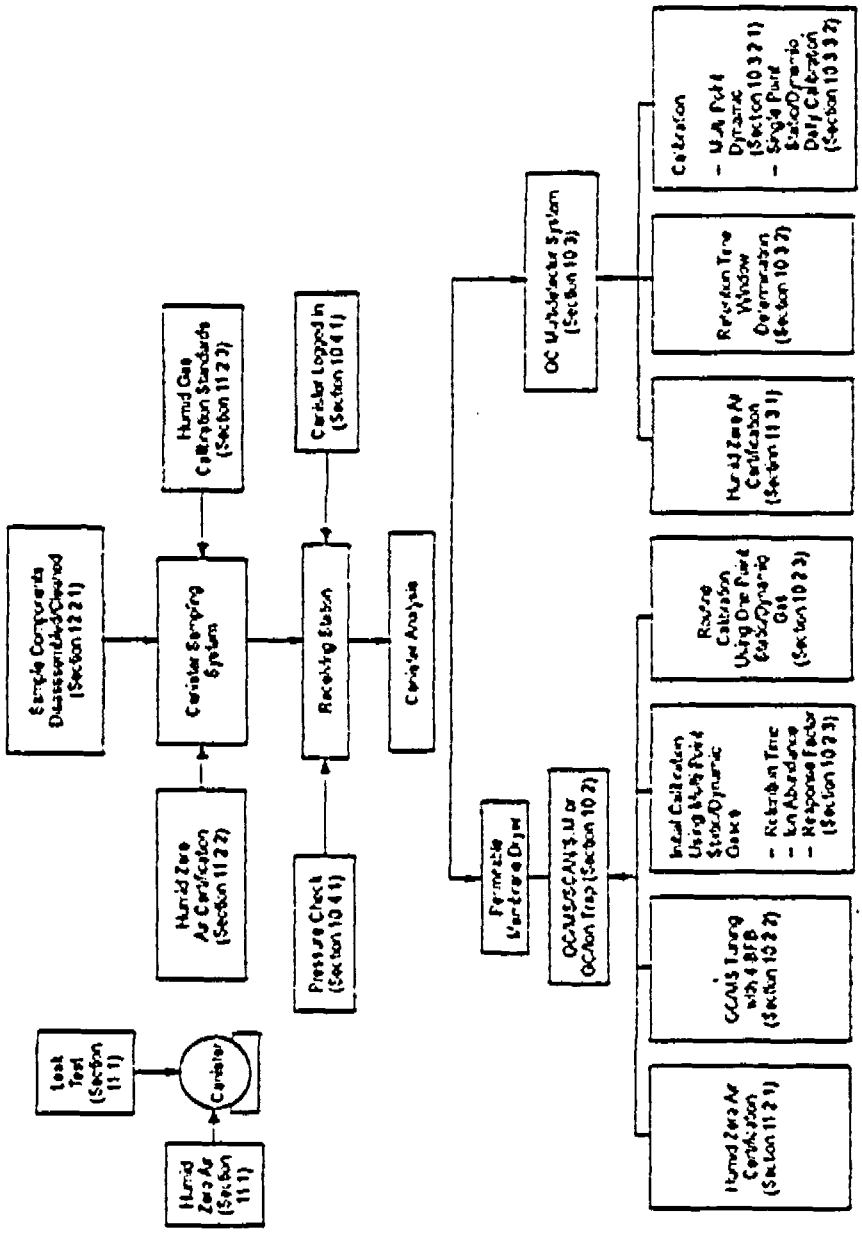

Figure 21. Compendium Method TO-14A system quality assurance/quality control (QA/QC) activities associated with various analytical systems.

Appendix A

Availability Of VOC Standards From United States Environmental Protection Agency

1. Availability of Audit Cylinders

1.1 At the time of the publication of the original Compendium Method TO-14, the USEPA provided cylinder gas standards of hazardous organic compounds at the ppb level. These standards were used to audit the performance of monitoring systems such as those described in the original Compendium Method TO-14. However, this service is no longer provided.

1.2 To obtain information about the availability of different audit gases, interested parties are encouraged to call commercial gas suppliers.

2. Audit Cylinder Certification

2.1 All audit cylinders should be periodically analyzed to assure that cylinder concentrations have remained stable.

2.2 All audit gases, including quality control analyses, of ppbv hazardous VOC standards should be traceable to NIST.

3. Information on EPA's VOC Standards

3.1 USEPA program/regional offices, state/local agencies, and others may obtain advice and information on VOC standards by calling:

Mr. Howard Christ
U.S. Environmental Protection Agency
National Exposure Research Laboratory (NERL)
Research Triangle Park, NC 27711
919-541-4531

[This page intentionally left blank]

Appendix B

Operating Procedures For A Portable Gas Chromatograph Equipped With A Photoionization Detector

1. Scope

This procedure is intended to screen ambient air environments for volatile organic compounds. Screening is accomplished by collection of VOC samples within an area and analysis on site using a portable gas chromatograph/integrator. This procedure is not intended to yield quantitative or definite qualitative information regarding the substances detected. Rather, it provides a chromatographic "profile" of the occurrence and intensity of unknown volatile compounds which assists in placement of fixed-site samplers.

2. Applicable Documents

2.1 ASTM Standards

- E260 *Recommended Practice for General Gas Chromatography Procedures*
- E355 *Practice for Gas Chromatography Terms and Relationships*

2.2 Other Documents

Portable Instruments User's Manual for Monitoring VOC Sources, EPA-340/1-86-015, U. S. Environmental Protection Agency, Washington, DC, June, 1986.

3. Summary of Method

3.1 An air sample is extracted directly from ambient air and analyzed on site by a portable GC.

3.2 Analysis is accomplished by drawing an accurate volume of ambient air through a sampling port and into a concentrator, then the sample air is transported by carrier gas onto a packed column and into a PID, resulting in response peak(s). Retention times are compared with those in a standard chromatogram to predict the probable identity of the sample components.

4. Significance

4.1 VOCs are emitted into the atmosphere from a variety of sources including petroleum refineries, synthetic organic chemical plants, natural gas processing plants, and automobile exhaust. Many of these VOC emissions are acutely toxic; therefore, their determination in ambient air is necessary to assess human health impacts.

4.2 Conventional methods for VOC determination use solid sorbent and canister sampling techniques.
4.3 Collection of ambient air samples in canisters provides (1) convenient integration of ambient samples over a specific time period, (e.g., 24 hours); (2) remote sampling and central analysis; (3) ease of storing and shipping samples, if necessary; (4) unattended sample collection; (5) analysis of samples from multiple sites with one analytical system; and (6) collection of sufficient sample volume to allow assessment of measurement precision and/or analysis of samples by several analytical systems.

4.4 The use of portable GC equipped with multidetectors has assisted air toxics programs by using the portable GC as a "screening tool" to determine "hot spots," potential interferences, and semi-quantitation of VOCs, prior to locating more traditional fixed-site samplers.

5. Definitions

Definitions used in this document and in any user-prepared Standard Operating Procedures (SOPs) should be consistent with ASTM Methods D1356 and E355. Abbreviations and symbols pertinent to this method are defined at point of use.

6. Interferences

6.1 The most significant interferences result from extreme differences in limits of detection (LOD) among the target VOCs (see Table B-1). Limitations in resolution associated with ambient temperature, chromatography and the relatively large number of chemicals result in coelution of many of the target components. Coelution of compounds with significantly different PID sensitivities will mask compounds with more modest sensitivities. This will be most dramatic in interferences from benzene and toluene.

6.2 A typical chromatogram and peak assignments of a standard mixture of target VOCs (under the prescribed analytical conditions of this method) are illustrated in Figure B-1. Samples which contain a highly complex mixture of components and/or interfering levels of benzene and toluene are analyzed on a second, longer chromatographic column. The same liquid phase in the primary column is contained in the alternate column but at a higher percent loading.

6.3 Recent designs in commercially available GCs have preconcentrator capabilities for sampling lower concentrations of VOCs, pre-column detection with back-flush capability for shorter analytical time, constant column temperature for method precision and accuracy and multidetector (PID, ECD, and FID) capability for versatility. Many of these newer features address the weaknesses and interferences mentioned above. A list of major manufacturers of portable GC systems is provided in Table B-2.

7. Apparatus

7.1 Gas Chromatogram

A GC, Photovac Inc., 739 B Parks Ave, Huntington, NY 11743, Model 10S10 or 10S50, or equivalent used for surveying ambient air environments (which could employ a multidetector) for sensing numerous VOCs compounds eluting from a packed column at ambient temperatures. This particular portable GC procedure is

written employing the photoionization detector as its major sensing device, as part of the portable GC survey tool. Chromatograms are developed on a column of 3% SP-2100 on 100/120 supelcoport (0.66-m x 3.2-mm I.D.) with a flow of 30 mL/min air.

7.2 GC Accessories

In addition to the basic gas chromatograph, several other pieces of equipment are required to execute the survey sampling. Those include gas-tight syringes for standard injection, alternate carrier gas supplies, high pressure connections for filling the internal carrier gas reservoir, and if the Model 10S10 is used, a recording integrator.

8. Reagents and Materials

8.1 Carrier Gas

"Zero" air [<0.1 ppm total hydrocarbon(THC)] is used as the carrier gas. This gas is conveniently contained in 0.84 m^3 (30 ft^3) aluminum cylinders. Carrier gas of poorer quality may result in spurious peaks in sample chromatograms. A Brooks, Type 1355-00F1AAA rotameter (or equivalent) with an R-215-AAA tube and glass float is used to set column flow.

8.2 System Performance Mixture

A mixture of three target compounds (e.g., benzene, trichloroethylene, and styrene) in nitrogen is used for monitoring instrument performance. The approximate concentration for each of the compounds in this mixture is 10 parts per billion (ppb). This mixture is manufactured in small, disposable gas cylinders [at 275 kPa (40 psi)] various commercial vendors.

8.3 Reagent Grade Nitrogen Gas

A small disposable cylinder of high purity nitrogen gas is used for blank injections.

8.4 Sampling Syringes

Gas-tight syringes, without attached shut-off valves (Hamilton Model 1002LT, or equivalent) are used to introduce accurate sample volumes into the high pressure injectors on the portable gas chromatograph. Gas syringes with shut-off valves are not recommended because of memory problems associated with the valves. For samples suspected of containing high concentrations of volatile compounds, disposable glass syringes (e.g., Glaspak, or equivalent) with stainless steel/Teflon® hub needles are used.

8.5 High Pressure Filter

An adapter (Photovac SA101, or equivalent) for filling the internal carrier gas reservoir on the portable GC is used to deliver "zero" air.

9. Procedure

9.1 Instrument Setup

9.1.1 The portable gas chromatograph must be prepared prior to use in the ambient survey sampling. The pre-sampling activities consist of filling the internal carrier gas cylinder, charging the internal power supply, adjusting individual column carrier gas flows, and stabilizing the photoionization detector.

9.1.2 The internal reservoir is filled with "zero" air. The internal 12V battery can be recharged to provide up to eight hour of operation. A battery which is discharged will automatically cause the power to the instrument to be shut down and will require an overnight charge. During AC operation, the batteries will automatically be trickle-charged or in a standby mode.

9.1.3 The portable GC should be operated (using the internal battery power supply) at least forty minutes prior to collection of the first sample to insure that the photoionization detector has stabilized. Upon arriving at the area to be sampled, the unit should be connected to AC power, if available.

9.2 Sample Collection

9.2.1 After the portable gas chromatograph is located and connected to 110V AC, the carrier gas glows must be adjusted. Flows to the 1.22 meter, 5% SE-30 and 0.66 meter, 3% SP2100 columns are adjusted with needle valves. Flows of 60 mL/min (5% SE-30) and 30 mL/min (3% SP2100) are adjusted by means of a calibrated rotameter. Switching between the two columns is accomplished by turning the valve located beneath the electronic module. During long periods of inactivity, the flows to both columns should be reduced to conserve pressure in the internal carrier gas supply. The baseline on the recorder/integrator is set to 20% full scale.

9.2.2 Prior to analysis of actual samples, an injection of the performance evaluation mixture must be made to verify chromatographic and detector performance. This is accomplished by withdrawing 1.0 mL samples of this mixture from the calibration cylinder and injecting it onto the 3% SP2100 column. The next sample analyzed should be a blank, consisting of reagent grade nitrogen.

9.2.3 Ambient air samples are injected onto the 3% SP2100 column. The chromatogram is developed for 15 minutes. Samples which produce particularly complex chromatograms, especially for early eluting components, are reinjected on the 5% SE-30 column.

[Note: In no instance should a syringe which has been used for the injection of the calibrant/system performance mixture be use for the acquisition and collection of samples, or vice versa.]

9.2.4 Samples have generally been collected from the ambient air at sites which are near suspected sources of VOCs and compared with those which are not. Typically, selection of sample locations is based on the presence of chemical odors. Samples collected in areas without detectable odors have not shown significant PID responses. Therefore, sampling efforts should be initially concentrated on "suspect" environments (i.e., those which have appreciable odors). The objective of the sampling is to locate sources of the target compounds. Ultimately, samples should be collected throughout the entire location, but with particular attention given to areas of high or frequent occupation.

9.3 Sample Analysis

9.3.1 **Quantitative Analysis.** Positive identification of sample components is not the objective of this "screening" procedure. Visual comparison of retention times to those in a standard chromatogram (Figure B-1) are used only to predict the probable sample component types.

9.3.2 **Estimation of Levels.** As with qualitative analysis, estimates of component concentrations are extremely tentative and are based on instrument responses to the calibrant species (e.g., benzene, trichloroethylene, styrene), the proposed component identification, and the difference in response between sample component and calibrant. For purposes of locating pollutant emission sources, roughly estimated concentrations and suspected compound types are considered sufficient.

10. Performance Criteria and Quality Assurance

Required quality assurance measures and guidance concerning performance criteria that should be achieved within each laboratory are summarized and provided in the following section.

10.1 Standard Operating Procedures

10.1.1 SOPs should be generated by the users to describe and document the following activities in their laboratory: (1) assembly, calibration, leak check, and operation of the specific portable GC sampling system and equipment used; (2) preparation, storage, shipment,and handling of the portable GC sampler; (3) purchase, certification, and transport of standard reference materials; and (4) all aspects of data recording and processing, including lists of computer hardware and software used.

10.1.2 Specific stepwise instructions should be provided in the SOPs and should be readily available to and understood by the personnel conducting the survey work.

10.2 Quality Assurance Program

10.2.1 **Reagent and Materials Control.** The carrier gas employed with the portable GC is "zero air" containing less than 0.1 ppm VOCs. System performance mixtures are certified standard mixtures purchased form Scott Specialty Gases, or equivalent.

10.2.2 **Sampling Protocol and Chain of Custody.** Sampling protocol sheets must be completed for each sample. Specifics of the sample with regard to sampling location, sample volume, analysis conditions, and supporting calibration and visual inspection information are detailed by these documents. An example form is exhibited in Table B-3.

10.2.3 **Blanks, Duplicates, and System Performance Samples.**

10.2.3.1 **Blanks and Duplicates.** Ten percent of all injections made to the portable GC are blanks, where the blank is reagent grade nitrogen gas. This is the second injection in each sampling location. An additional 10% of all injections made are duplicate injections. This will enhance the probability that the chromatograph of a sample reflects only the composition of that sample and not any previous injection. Blank injections showing a significant amount of contaminants will be cause for remedial action.

10.2.3.2 **System Performance Mixture.** An injection of the system performance mixture will be made at the beginning of a visit to a particular sampling location (i.e., the first injection). The range of acceptable chromatographic system performance criteria and detector response is shown in Table B-4. These criteria are selected with regard to the intended application of this protocol and the limited availability of standard mixtures in this area. Corrective action should be taken with the column or PID before sample injections are made if the

performance is deemed out-of-range. Under this regimen of blanks and system performance samples, approximately eight samples can be collected and analyzed in a three hour visit to each sampling location.

10.3 Method Precision and Accuracy

The purpose of the analytical approach outlined in this method is to provide presumptive information regarding the presence of selected VOCs emissions. In this context, precision and accuracy are to be determined. However, quality assurance criteria are described in Section 10.2 which insure the samples collected represent the ambient environment.

10.4 Range and Limits of Detection

The range and limits of detection of this method are highly compound dependent due to large differences in response of the portable GCs photoionization detector to the various target compounds. Aromatic compounds and olefinic halogenated compounds will be detected at lower levels than the halomethanes or aliphatic hydrocarbons. The concentration range of application of this method is approximately two orders of magnitude.

TABLE B-1. ESTIMATED LIMITS OF DETECTION (LOD) FOR SELECTED VOCs BASED ON 1 μL SAMPLE VOLUME

Compound	LOD (ng)	LOD (ppb)
Chloroform[1]	2	450
1,1,1-Trichloroethane[1]	2	450
Carbon tetrachloride[1]	2	450
Benzene	.006	2
1,2-Dichloroethane[2]	.05	14
Trichloroethylene[2]	.05	14
Tetrachloroethylene[2]	.05	14
1,2-Dibromoethane	.02	2
p-Xylene[3]	.02	4
m-Xylene[3]	.02	4
o-Xylene[4]	.01	3
Styrene[4]	.01	3

[1]Chloroform, 1,1,1-trichloroethane, and carbon tetrachloride coelute on 0.66-m 3% SP2100.
[2]1,2-Dichloroethane, tricholroethylene, and tetrachloroethylene coelute on 0.66-m 3% SP2100.
[3]p-Xylene and m-xylene coelute on 0.66-m 3% SP2100.
[4]Styrene and o-xylene coelute on 0.66-m 3% SP2100.

TABLE B-2. LIST OF COMMERCIALLY AVAILABLE PORTABLE VOC INSTRUMENT MANUFACTURERS

Viking Instruments Corporation 3800 Concorde Parkway Chantilly, VA 22021 Phone (703) 968-0101 FAX (703) 968-0166	Photovac International Inc. 25-B Jefryn Boulevard Deer Park, NY 11729 Phone (516) 254-4199 FAX (516) 254-4284
MSA Baseline North Star Route PO Box 649 Lyons, CO 80540 Phone (303) 823-6661 FAX (303) 823-5151	SRI Instruments Inc. 3882 Del Amo Boulevard Suite 601 Torrance, CA 90503 Phone (310) 214-5092 FAX (310) 214-5097
MTI Analytical Instruments 41762 Christy Street Fremont, CA 94538 Phone (510) 490-0900 FAX (510) 651-2498	Sentex Sensing Technology 552 Broad Avenue Ridgefield, NJ 07657 Phone (201) 945-3694 FAX (201) 941-6064
CMS Research Corporation 200 Chase Park South, Suite 100 Birmingham, AL 35244 Phone (205) 733-6910 FAX (205) 733-6919	HNU Systems Inc. 160 Charlemont Street Newton Highlands, MA 021161-9987 Phone (617) 964-6690 FAX (617) 965-5812
Microsensor Systems Inc. 62 Corporate Court Bowling Green, KY 42104 Phone (502) 745-0099 FAX (502) -	

TABLE B-3. PORTABLE GAS CHROMATOGRAPH SAMPLING DATA SHEET

DATE: _____ LOCATION: _____ TIME: _____

CHROMATOGRAPHIC CONDITIONS: _____

COLUMN 1: COLUMN TYPE:

I.D. (mm): _____ LENGTH (mm): _____ FLOW (mL/min): _____

COLUMN 2: COLUMN TYPE:

I.D. (mm): _____ LENGTH (mm): _____ FLOW (mL/min): _____

INJ. NO.	INJ. VOL.	COLUMN NO.	SETTING	LOCATION

SITE PLAN (indicate sampling locations):

DATE _____ SIGNATURE _____

TABLE B-4. SYSTEM PERFORMANCE CRITERIA FOR PORTABLE GC[1]

Criteria	Test Compound	Acceptable Range	Suggested Corrective Action
PID Response	Trichloroethylene	≥ 10^8 uV-sec/ng	Re-tune or replace lamp
Elution Time	Styrene	2.65 ± 0.15 min	Inspect for leaks, adjust carrier flow
Resolution[2]	Benzene/Trichloro-ethylene	≥ 1.4	Replace column

[1]Based on analysis of a vapor mixture of benzene, styrene, and trichloroethylene.
[2]Define by: $R + = 2d/(W_1+W_2)$; where d = distance between the peaks and W = peak width at base.

TABLE B-5. ESTIMATED LIMITS OF DETECTION (LOD) FOR SELECTED VOCs

Compound	LOD (ng)	LOD (ppb)
Chloroform[1]	2	450
1,1,1-Trichloroethane[1]	2	450
Carbon tetrachloride[1]	2	450
Benzene	.006	2
1,2-Dichloroethane[2]	.05	14
Trichloroethylene[2]	.05	14
Tetrachloroethylene[2]	.05	14
1,2-Dibromoethane	.02	2
p-Xylene[3]	.02	4
m-Xylene[3]	.02	4
o-Xylene[4]	.01	3
Styrene[4]	.01	3

[1]Chloroform, 1,1,1-trichloroethane, and carbon tetrachloride coelute on 0.66-m 3% SP2100.
[2]1,2-Dichloroethane, tricholroethylene, and tetrachloroethylene coelute on 0.66-m 3% SP2100.
[3]p-Xylene and m-xylene coelute on 0.66-m 3% SP2100.
[4]Styrene and o-xylene coelute on 0.66-m 3% SP2100.

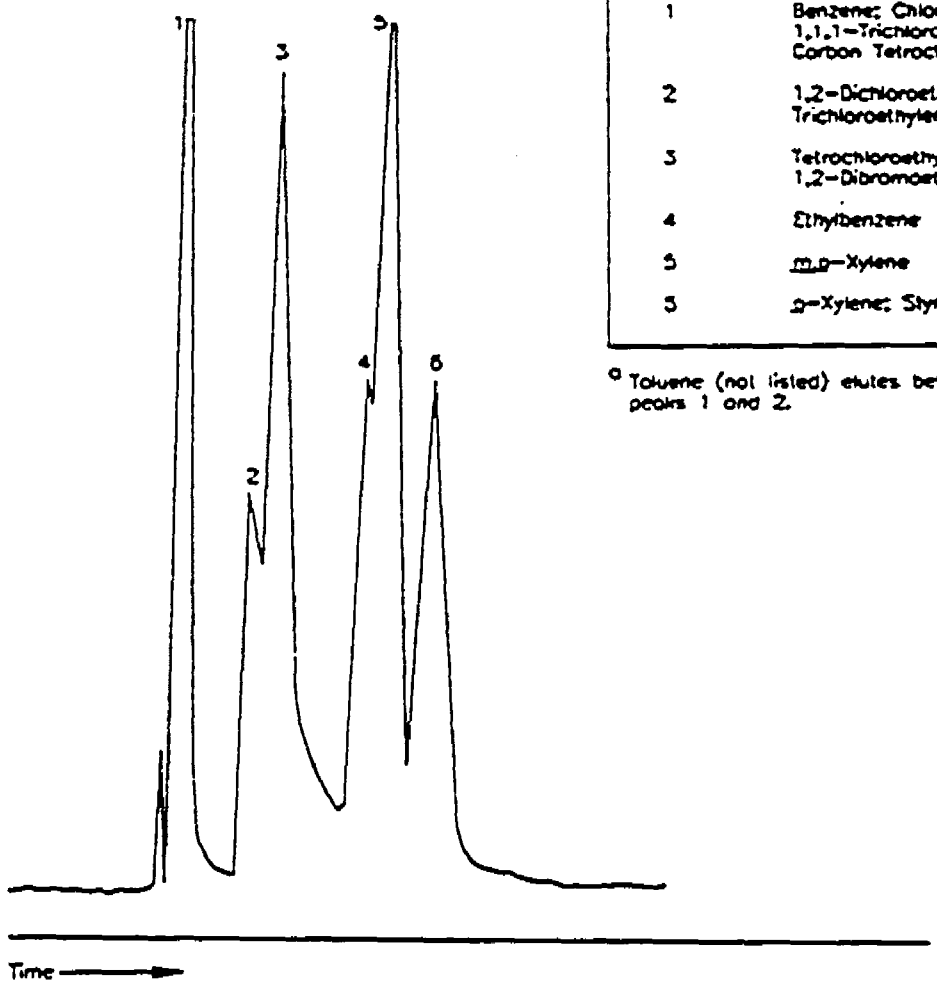

Peak Assignments for Standard Mixtures

Peak No.	Compound(s)[a]
1	Benzene; Chloroform; 1,1,1-Trichloroethane; Carbon Tetrachloride
2	1,2-Dichloroethane; Trichloroethylene
3	Tetrachloroethylene; 1,2-Dibromoethane
4	Ethylbenzene
5	m,p-Xylene
5	o-Xylene; Styrene

[a] Toluene (not listed) elutes between peaks 1 and 2.

Figure B-1. Typical chromatogram of VOCs determined by a portable GC.

Appendix C

Installation And Operation Procedures For U.S. Environmental Protection Agency's Urban Air Toxic Monitoring Program Sampler

1. Scope

1.1 The subatmospheric sampling system described in this method was designed specifically for use in USEPA's Urban Air Toxic Monitoring Program (UATMP) to provide analytical support to the states in their assessment of potential health risks from certain toxic organic compounds that may be present in urban atmospheres.

1.2 The sampler is based on the collection of whole air samples in 6-liter, specially prepared passivated stainless steel canisters. The sampler features electronic timer for ease, accuracy and flexibility of sample period programming, an independently setable presample warm-up and ambient air purge period, protection from loss of sample due to power interruptions, and a self-contained configuration housed in an all-metal portable case, as illustrated in Figure C-1.

1.3 The design of the sampler is pumpless, using an evacuated canister to draw the ambient sample air into itself at a fixed flow rate (3-5 mL/min) controlled by an electronic mass flow controller. Because of the relatively low sample flow rates necessary for the integration periods, auxiliary flushing of the sample inlet line is provided by a small, general-purpose vacuum pump (not in contact with the sample air stream). Further, experience has shown that inlet lines and surfaces sometimes build up or accumulate substantial concentrations of organic materials under stagnant (zero flow rate) conditions. Therefore such lines and surfaces need to be purged and equilibrated to the sample air for some time prior to the beginning of the actual sample collection period. For this reason, the sampler includes dual timers, one of which is set to start the pump several hours prior to the specified start of the sample period to purge the inlet lines and surfaces. As illustrated in Figure C-1, sample air drawn into the canister passes through only four components: the heated inlet line, a 2-micron particulate filter, the electron flow controller, and the latching solenoid valve.

2. Summary of Method

2.1 In operation, timer 1 is set to start the pump about 6 hours before the scheduled sample period. The pump draws sample air in through the sample inlet and particulate filter to purge and equilibrate these components, at a flow rate limited by the capillary to approximately 100 mL/min. Timer 1 also energizes the heated inlet line to allow it to come up to its controlled temperature of 65 to 70 degrees C, and turns on the flow controller to allow it to stabilize. The pump draws additional sample air through the flow controller by way of the normally open port of the 3-way solenoid valve. This flow purges the flow controller and allows it to achieve a stable controlled flow at the specified sample flow rate prior to the sample period.

2.2 At the scheduled start of the sample period, timer 2 is set to activate both solenoid valves. When activated, the 3-way solenoid valve closes its normally open port to stop the flow controller purge flow and opens its normally closed port to start flow through the aldehyde sample cartridges. Simultaneously, the latching solenoid valve opens to start sample flow through into the canister.

2.3 At the end of the sample period, timer 2 closes the latching solenoid valve to stop the sample flow and seal the sample in the canister and also de-energizes the pump, flow controller, 3-way solenoid, and heated inlet line. During operation, the pump and sampler are located external to the sampler. The 2.4 meter (~8 foot) heated inlet line is installed through the outside wall, with most of its length outside and terminated externally with an inverted glass funnel to exclude precipitation. The indoor end is terminated in a stainless steel cross fitting to provide connections for the canister sample and the two optional formaldehyde cartridge samples.

3. Sampler Installation

3.1 The sampler must be operated indoors with the temperature between 20-32°C (~68 to 90°F). The sampler case should be located conveniently on a table, shelf, or other flat surface. Access to a source of 115 vac line power (500 watts/min) is also required. The pump is removed from the sampler case and located remotely from the sampler (connected with a 1/4 inch O.D. extension tubing and a suitable electrical extension cord).

3.2 Electrical Connections (~Figure C-1)

3.2.1 The sampler cover is removed. The sampler is not plugged into the 115 vac power until all other electrical connections are completed.

3.2.2 The pump is plugged into its power connector (if not already connected) and the battery connectors are snapped onto the battery packs on the covers of both timers.

3.2.3 The sampler power plug is inserted into a 115 volts ac line grounded receptacle. The sampler must be grounded for operator safety. The electrical wires are routed and tied so they remain out of the way.

3.3 Pneumatic Connections

3.3.1 The length of 1/16 inch O.D. stainless steel tubing is connected from port A of the sampler (on the right side of the flow controller module) to the air inlet line.

3.3.2 The pump is connected to the sampler with 1/4 inch O.D. plastic tubing. This tubing may be up to 7 meters (~20 feet) long. A short length of tubing is installed to reduce pump noise. All tubing is conveniently routed and, if necessary, tied in place.

4. Sampler Preparation

4.1 Canister

4.1.1 The sample canister is installed no more than 2 days before the scheduled sampling day.

4.1.2 With timer #1 ON, the flow controller is allowed to warm up for at least 15 minutes, longer if possible.

4.1.3 An evacuated canister is connected to one of the short lengths of 1/8 inch O.D. stainless steel tubing from port B (solenoid valve) of the sampler. The canister valve is left closed. The Swagelock® fitting on the canister must not be cross-threaded. The connection is tightened snugly with a wrench.

4.1.4 The end of the other length of stainless steel tubing from port B (solenoid valve) is connected with a Swagelock® plug.

4.1.5 If duplicate canisters are to be sampled, the plug is removed from the second 1/8 inch O.D. stainless steel tubing from port B (solenoid valve) and the second canister is connected. The canister valve is left closed.

4.1.6 The ON button of timer #2 is pressed. The flow through the flow controller should be stopped by this action.

4.1.7 The flow controller switch is turned to "READ" and the zero flow reading is obtained. If this reading is not stable, wait until the reading is stabilized.

4.1.8 The flow controller switch is turned to "SET" and the flow setting is adjusted to the algebraic SUM of the most recent entry on Table C-1 and the zero reading obtained in step 4.1.7 (If the zero reading is negative, SUBTRACT the zero reading from the Table C-1 value). Be sure to use the correct Table C-1 flow value for one or two canisters, as appropriate.

[Note: If the analytical laboratory determines that the canister sample pressure is too low or too high, a new flow setting or settings will be issued for the sampler. The new flow setting should be recorded in Table C-1 and used until superseded by new settings.]

4.1.9 Timer #2 is turned OFF to again start the flow through the flow controller. With the pump (timer #1) ON and the sampling valve (timer #2) OFF, the flow controller is turned to "READ" and the flow is verified to be the same as the flow setting made in Section 4.1.8. If not, the flow setting is rechecked in Section 4.1.8 and the flow setting is readjusted if necessary.

4.1.10 The OFF button of timer #1 is pressed to stop the pump.

4.1.11 The canister valve(s) are fully opened.

4.2 Timers

4.2.1 Timer #2 is set to turn ON at the scheduled ON time for the sample period, and OFF at the scheduled OFF time (see the subsequent section on setting the timers). Normal ON time: 12:00 AM on the scheduled sampling day. Normal OFF time: 11:59 PM on the scheduled sampling day. The OFF time is 11:59 PM instead of 12:00 AM so that the day number for the OFF time is the same as the day number for the ON time. Be sure to set the correct day number.

4.2.2 Timer #1 is set to turn ON six (6) hours before the beginning of the scheduled sample period and OFF at the scheduled OFF time for the sample period (same OFF time as for timer #2). See the subsequent section on setting the timers. Normal ON time: 06:00 PM on the day prior to the scheduled sampling day. Normal OFF time: 11:59 PM on the scheduled sampling day.

[Note: The timers are wired so that the pump will be on whenever either timer is on. Thus the pump will run if timer #2 is ON even if timer #1 is OFF.]

4.2.3 The elapsed time meter is set to 0.

4.3 Sampler Check

4.3.1 The following must be verified before leaving the sampling site:

(1) Canister(s) is (are) connected properly and the unused connection is capped if only one canister is used.
(2) Canister valve(s) is (are) opened.
(3) Both timers are programmed correctly for the scheduled sample period.
(4) Both timers are set to "AUTO".
(5) Both timers are initially OFF.

(6) Both timers are set to the correct current time of day and day number.
(7) Elapsed time meter is set to 0.

4.4 Sampler Recovery (Post Sampling)

4.4.1 The valve on the canister is closed.

4.4.2 The canister is disconnected from the sampler, the sample data sheet is completed, and the canister is prepared for shipment to the analytical laboratory.

4.4.3 If two canisters were sampled, Section 2.4.2 is repeated for the other canisters.

5. Timer Setting

Since the timers are 7-day timers, the days of the week are numbered from 1 to 7. The assignment of day numbers to days of the week is indicated on the timer keypad: 1 = Sunday, 2 = Monday, 3 = Tuesday, 4 = Wednesday, 5 = Thursday, 6 = Friday, and 7 = Saturday. This programming is quite simple, but some timers may malfunction or operate erratically if not programmed exactly right. To assure correct operation, the timers should be reset and completely reprogrammed "from scratch" for each sample. The correct current time of day is re-entered to reprogram the timer. Any program in the timer's memory is erased by resetting the timer (pressing the reset button). The timer is set by the following:

(1) pressing the reset button,
(2) entering the correct day number and time of day,
(3) entering the ON and OFF times for the sample period, and
(4) verifying that the ON and OFF time settings are correct.

5.1 Timer Reset

The timer reset button is pressed, which is recessed in a small hole just above the LED (light emitting diode) indicator light. A small object that will fit through the hole, such as a pencil, match, or pen is used to press the timer. After reset, the timer display should show |1| |10:00|.

[Note: The timers may operate erratically when the batteries are discharged, which happens when the sampler is unplugged or without power for several hours. When the sampler is again powered up, several hours may be required to recharge the batteries. To avoid discharging the batteries, the battery pack should be disconnected from the timer when the sampler is unplugged.]

5.2 Date and Time Entry

The selector switch is turned to SET and the number button corresponding to the day number is pressed. For example, a "2" is pressed for Monday. The current time of day is entered. For example, if the time is 9:00 AM, 900 is pressed. AM or PM is pressed as applicable. Display should show |2| |'9:00| for 9:00 AM Monday.

[Note: ' indicates AM and , indicates PM.]

The CLOCK button is pressed. Display should show |-| |--:--|. If an error is made, |E| |EE:EE| is shown on the display. The CLEAR button is pressed and the above steps are repeated. The selector switch is turned to AUTO or MAN to verify correct time setting.

5.3 ON and OFF Entry

The selector switch is turned to SET. The ON and OFF program is entered in the following order: day, number, time, AM or PM, ON or OFF. (Example: To turn ON at 12:00 AM on day 5 (Thursday); 5, 1200, AM, ON is entered). (Example: To turn OFF at 11:59 PM on day 5 (Thursday); 5, 11:59, PM, OFF is entered.) If the display indicates an error (|E| |EE:EE|), the timer is reset. The selector switch is turned to AUTO.

5.4 ON and OFF Verification

5.4.1 The selector switch is turned to REVIEW. The number of the scheduled sample day is pressed. ON is pressed. The display should show the time of the beginning of the sample period (for example, |5| |'12:00|). [' indicates AM.] ON is pressed again. The display should show |5| |--:--|, indicating no other ON times are programmed.

5.4.2 OFF is pressed. The display should show the time of the end of the sample period, (for example, |5| |, 11:59|). PM is indicated by the "," mark before the time. OFF is pressed again. The display should show |5| |--:--|, indicating no other OFF times are programmed. The selector is switched to AUTO. If anything is incorrect, the timer is reset and reprogrammed.

TABLE C-1. NET FLOW CONTROLLER SETTING

DATE	1 CANISTER	2 CANISTERS

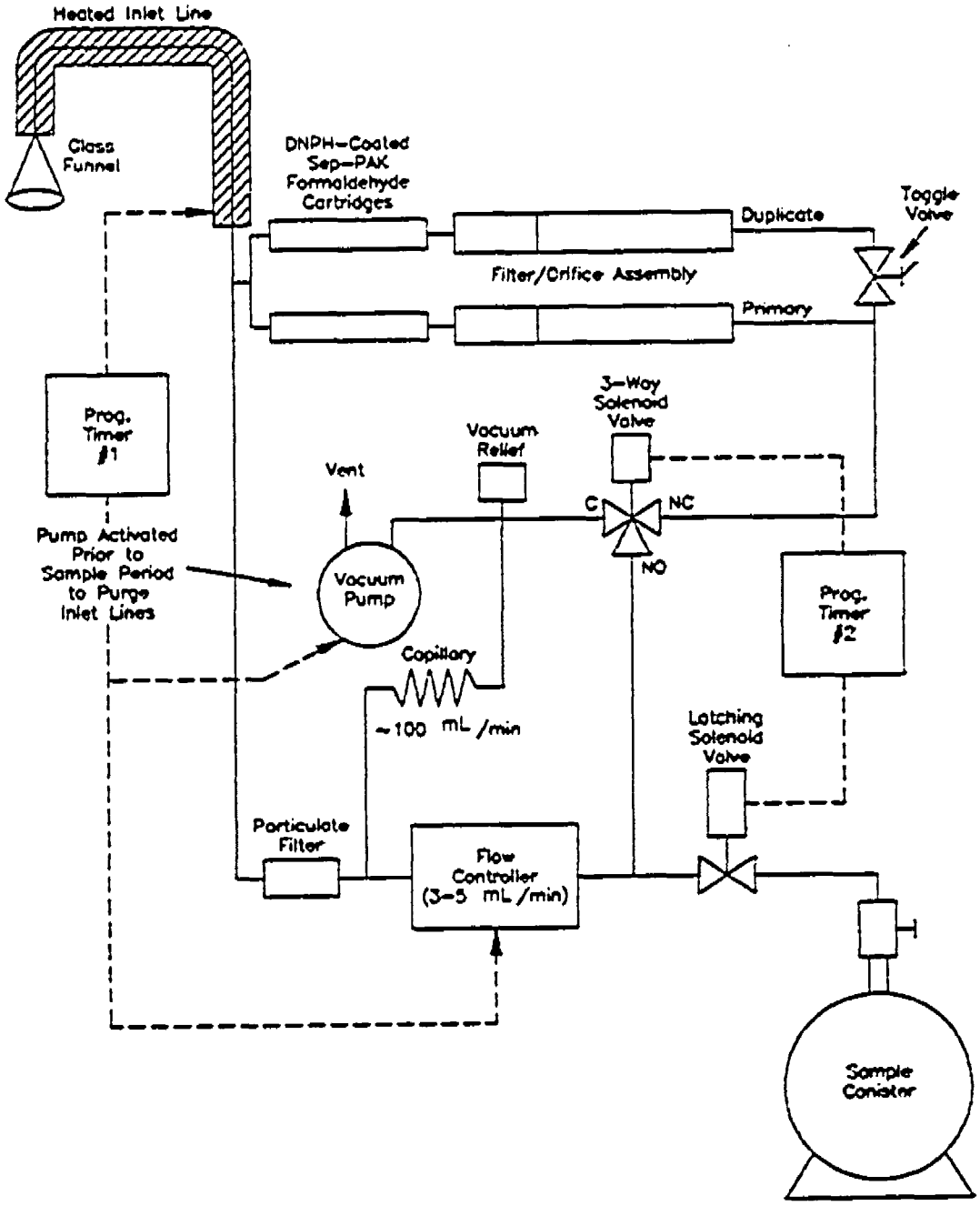

Figure C-1. Example of EPA's UATMP air sampler.