EGG-ES-8204

Los Alamos Environmental Restoration Records Processing Facility

# Los Alamos National Laboratory

ER Record I.D.# 0015364

## Sampling and Analysis Data Document

This document contains uninterpreted sampling and analytical data. The data will be interpreted by the DOE Environmental Survey Team and used to modify, as appropriate, the tentative Survey findings contained in the Environmental Survey Preliminary Report. Final Survey findings will be presented in the Environmental Survey Summary Report.

## DRAFT

**Volume I**
**November 1989**

DEPARTMENT OF ENERG

ENVIRONMENTAL SURVE

8990

EGG-ES-8204

# LOS ALAMOS NATIONAL LABORATORY SAMPLING AND ANALYSIS DATA DOCUMENT (DRAFT)

VOLUME I

November 1989

Prepared for the
U.S. Department of Energy
Office of Environmental Audit

Prepared by:
DOE Environmental Survey and
Idaho National Engineering Laboratory

Operated by
EG&G Idaho, Inc.

Under
DOE Contract No. DE-AC07-76IDO1570

For the
U.S. Department of Energy

Approved for External Review

INEL Field Team Leader
and INEL Program Manager _____ R.M. Lugar

INEL Analytical Team Leader _____ J.S. Jessup

INEL Analytical QA Manager _____ J.T. Bennett

INEL Data Management _____ E.J. Balkovetz

INEL QA Coordinator _____ G.B. Wiersma

(BLANK PAGE)

CONTENTS

VOLUME I

DATA FLAGS AND ACRONYMS ..... xi

1. INTRODUCTION ..... 1-1

1.2 Site Sampling and Analysis ..... 1-2

2. SUMMARY OF SAMPLING AND ANALYSIS (Deleted)..... 2-1

3. METHODS ..... 3-1

3.1 Field Sampling Methods ..... 3-1

3.1.1 Surface Water Sampling Methods ..... 3-1
3.1.2 Solids ..... 3-3
3.1.3 Soil Gas Sampling Method ..... 3-5
3.1.4 Geophysical Survey Methods ..... 3-6

3.2 Analytical Methods ..... 3-8

3.2.1 Volatile Organic Compounds ..... 3-8
3.2.2 Semivolatile Organic Compounds ..... 3-13
3.2.3 Pesticide/PCBs ..... 3-18
3.2.4 High Explosives ..... 3-21
3.2.5 Inorganic Analytes ..... 3-23
3.2.6 Cyanide ..... 3-27
3.2.7 Toxicity Characteristic Leaching Procedure ..... 3-28
3.2.8 Asbestos Analysis ..... 3-29
3.2.9 Radiological Analytical Procedures ..... 3-30
3.2.10 Field Radiological Procedures ..... 3-32

4. DATA PRESENTATION AND READERS GUIDE ..... 4-1

4.0.1 Data Tables ..... 4-3
4.0.2 Regulatory Limits ..... 4-16
4.0.3 Background Levels ..... 4-16

4.1 Environmental Problem 1: Active Firing Sites ..... 4.1-1

4.1.1 Sampling and Analysis Objectives ..... 4.1-2
4.1.2 Sampling and Analysis Design ..... 4.1-3
4.1.3 Field and Analytical Data ..... 4.1-6
4.1.4 Limitations and Qualifications ..... 4.1-10

4.2 Environmental Problem 2: Burn Areas..... 4.2-1

4.2.1 Sampling and Analysis Objectives ..... 4.2-1
4.2.2 Sampling and Analysis Design ..... 4.2-2
4.2.3 Field and Analytical Data ..... 4.2-4
4.2.4 Limitations and Qualifications ..... 4.2-8

4.3 Environmental Problem 3: Drainfield ..... 4.3-1

4.3.1 Sampling and Analysis Objectives ..... 4.3-1
4.3.2 Sampling and Analysis Design ..... 4 1
4.3.3 Field and Analytical Data ..... 4.
4.3.4 Limitations and Qualifications ..... 4.

4.4 Environmental Problem 4: (Deleted) ..... 4.4-1

4.5 Environmental Problem 5: (Deleted) ..... 4.5-1

4.6 Environmental Problem 6: Previous Discharges of NPDES Outfall No. 050 ..... 4.6-1

4.6.1 Sampling and Analysis Objectives ..... 4.6-1
4.6.2 Sampling and Analysis Design ..... 4.6-2
4.6.3 Field and Analytical Data ..... 4.6-3
4.6.4 Limitations and Qualifications ..... 4.6-5

4.7 Environmental Problem 7: (Deleted) ..... 4.7-1

4.8 Environmental Problem 8: (Deleted) ..... 4.8-1

4.9 Environmental Problem 9: Stream Channel Below NPDES Outfall No. 051 ..... 4.9-1

4.9.1 Sampling and Analysis Objectives ..... 4.9-1
4.9.2 Sampling and Analysis Design ..... 4.9-2
4.9.3 Field and Analytical Data ..... 4
4.9.4 Limitations and Qualifications ..... 4.

4.10 Environmental Problem 10: Stream Channel Below NPDES Outfalls in TA-16 and TA-19 ..... 4.10-1

4.10.1 Sampling and Analysis Objectives ..... 4.10-2
4.10.2 Sampling and Analysis Design ..... 4.10-2
4.10.3 Field and Analytical Data ..... 4.10-6
4.10.4 Limitations and Qualifications ..... 4.10-15

4.11 Environmental Problem 11: (Deleted) ..... 4.11-1

4.12 Environmental Problem 12: (Deleted) ..... 4.12-1

4.13 Environmental Problem 13: TA-53 Lagoon ..... 4.13-1

4.13.1 Sampling and Analysis Objectives ..... 4.13-1
4.13.2 Sampling and Analysis Design ..... 4.13-2
4.13.3 Field and Analytical Data ..... 4.13-3
4.13.4 Limitations and Qualifications ..... 4.13-(

4.14 Environmental Problem 14: Ancho Canyon Landfill in TA-39 ..... 4.14-1

4.14.1 Sampling and Analysis Objectives ..... 4.14-1
4.14.2 Sampling and Analysis Design ..... 4.14-2
4.14.3 Field and Analytical Data ..... 4.14-3
4.14.4 Limitations and Qualifications ..... 4.14-6

4.15 Environmental Problem 15: (Deleted) ..... 4.15-1

4.16 Environmental Problem 16: TA-35 Surface Impoundments .... 4.16-1

4.16.1 Sampling and Analysis Objectives ..... 4.16-1
4.16.2 Sampling and Analysis Design ..... 4.16-1
4.16.3 Field and Analytical Data ..... 4.16-2
4.16.4 Limitations and Qualifications ..... 4.16-5

4.17 Environmental Problem 17: (Deleted) ..... 4.17-1

4.18 Environmental Problem 18: .(Deleted) ..... 4.18-1

4.19 Environmental Problem 19: Spills and Leaks from Drums ... 4.19-1

4.19.1 Sampling and Analysis Objectives ..... 4.19-1
4.19.2 Sampling and Analysis Design ..... 4.19-2
4.19.3 Field and Analytical Data ..... 4.19-3
4.19.4 Limitations and Qualifications ..... 4.19-9

4.20 Environmental Problem 20: Abandoned/Inactive Underground Storage Tanks (Deleted) ..... 4.20-1

4.21 Environmental Problem 21: Leaks/Spills of Dielectric Oil ..... 4.21-1

4.21.1 Sampling and Analysis Objectives ..... 4.21-1
4.21.2 Sampling and Analysis Design ..... 4.21-2
4.21.3 Field and Analytical Data ..... 4.21-3
4.21.4 Limitations and Qualifications ..... 4.21-5

4.22 Environmental Problem 22: Inactive Landfills ..... 4.22-1

4.22.1 Sampling and Analysis Objectives ..... 4.22-2
4.22.2 Sampling and Analysis Design..... 4.22-3
4.22.3 Field and Analytical Data ..... 4.22-13
4.22.4 Limitations and Qualifications ..... 4.22-27

4.23 Environmental Problem 23: Open Dumps and Boneyards ..... 4.23-1

4.23.1 Sampling and Analysis Objectives ..... 4.23-1
4.23.2 Sampling and Analysis Design ..... 4.23-2
4.23.3 Field and Analytical Data ..... 4.23-7
4.23.4 Limitations and Qualifications ..... 4.23-21

4.24 Environmental Problem 24: Inactive Liquid Waste Disposal Sites ..... 4.24-1

4.24.1 Sampling and Analysis Objectives ..... 4.24-2
4.24.2 Sampling and Analysis Design ..... 4.2[illegible]
4.24.3 Field and Analytical Data ..... 4.24-[illegible]
4.24.4 Limitations and Qualifications ..... 4.24-20

4.25 Environmental Problem 25: Spills and Unplanned Liquid Releases ..... 4.25-[illegible]

4.25.1 Sampling and Analysis Objectives ..... 4.25-1
4.25.2 Sampling and Analysis Design ..... 4.25-[illegible]
4.25.3 Field and Analytical Data ..... 4.25-4
4.25.4 Limitations and Qualifications ..... 4.25-10

4.26 Environmental Problem 26: Inactive Firing Sites ..... 4.26-[illegible]

4.26.1 Sampling and Analysis Objectives ..... 4.26-[illegible]
4.26.2 Sampling and Analysis Design ..... 4.26-[illegible]
4.26.3 Field and Analytical Data ..... 4.26-4
4.26.4 Limitations and Qualifications ..... 4.26-12

4.27 Environmental Problem 27: TA-16 GMX-2 Site ..... 4.27-1

4.27.1 Sampling and Analysis Objectives ..... 4.27-[illegible]
4.27.2 Sampling and Analysis Design ..... 4.27-[illegible]
4.27.2 Field and Analytical Data ..... 4.27-3
4.27.4 Limitations and Qualifications ..... 4.2[illegible]

5. QUALITY ASSURANCE AND QUALITY CONTROL (QA/QC) ..... 5-1

5.1 Field QA/QC ..... 5-[illegible]

5.2 Analytical QA/QC ..... 5-6

5.2.1 Analytical Chemistry QA ..... 5-[illegible]
5.2.2 Analytical Chemistry QC ..... 5-9

5.3 Radiochemistry QA/QC..... 5-4

5.3.1 Radiological Quality Assurance (Laboratory) ..... 5-42
5.3.2 Field Radiochemistry ..... 5-4[illegible]

5.4 Data Management QA/QC ..... 5-50

6. REFERENCES ..... 6-[illegible]

APPENDIX A--LIST OF SAMPLING AND ANALYTICAL REQUESTS ..... A-1

APPENDIX B--BACKGROUND CONCENTRATION/LEVELS OF ANALYTES ..... B-1

VOLUME II

APPENDIX C--AUDITS ..... C-1

APPENDIX D--RADIOLOGICAL QA/QC DATA ..... D-1

APPENDIX E--ANALYTICAL AND QC DATA ..... E-1

APPENDIX F--GEOPHYSICAL SURVEY DATA ..... F-1

FIGURES

1.1 Sampling, analysis, and data management team organization ..... 1-3

4.1.1 Sampling locations at TA-40-15 Firing site ..... 4.1-15

4.1.2 Sampling locations at the TA-36 Lower Slobbovia Firing Site ..... 4.1-16

4.1.3 Sampling locations at the TA-15-44 Firing Site ..... 4.1-17

4.2.1 Sampling locations at TA-14 Burn Sites ..... 4.2-16

4.2.2 Sampling locations at TA-36 Pit ..... 4.2-17

4.3.1 Radiation survey and soil sampling locations at TA-49, Area 11 ..... 4.3-9

4.6.1 Sampling locations at TA-21 inactive NPDES 50 Outfall .... 4.6-7

4.6.2 Initial survey at TA-21 inactive NPDES 50 Outfall ..... 4.6-8

4.9.1 Sampling location downstream from NPDES Outfall 051 (TA-50) ..... 4.9-10

4.10.1 Sampling locations at TA-16-340 discharge..... 4.10-24

4.10.2 Sampling locations downstream from TA-16-300 NPDES 058 discharge ..... 4.10-25

4.10.3 Sampling locations downstream from NPDES 062 discharge.... 4.10-26

4.10.4 Sampling locations at TA-16 Sewage Treatment Plant ..... 4.10-27

4.13.1 Sampling locations at TA-053 Wastewater Treatment Lagoons ..... 4.13-9

4.14.1 Sampling locations at TA-039 Open Pit Ancho Canyon Landfill ..... 4.14-9

4.16.1 Sampling locations at TA-35-125 Impoundment ..... 4.16-9

4.19.1 Sampling locations south of TA-35-67 ..... 4.19-1

4.19.2 Sampling locations at TA-33 northwest of TA-33-22 ..... 4.1

4.19.3 Sampling locations west of Cooling Tower, TA-21 ..... 4.19-1

4.19.4 Sampling locations at TA-46 ..... 4.19-1

4.21.1 Sampling locations at overflow path of surface impoundment south of Bldg. TA-35-125 ..... 4.21-

4.22.1 TA-21 Cold Dump Site for geophysical survey and soil gas sampling locations ..... 4.22-3

4.22.2 Sampling locations at TA-6 south of two mile Mesa Road ... 4.22-3

4.22.3 Area for geophysical survey at TA-39 ..... 4.22-3

4.22.4 Sampling locations at TA-33 Landfill ..... 4.22-36

4.22.5 Sampling locations at TA-33-26 Landfill ..... 4.22-3

4.22.6 Sampling locations at the TA-46 Landfill Area ..... 4.22-3

4.22.7 Sampling locations at Airport Landfill in TA-00L ..... 4.22-3

4.22.8 Sampling locations at TA-0, MDA-C Landfill Area ..... 4.22

4.22.9 Sampling locations at TA-20 suspected Landfill ..... 4.22-41

4.23.1 Sampling locations at the TA-0 MDA-M Dump ..... 4.23-2

4.23.2 Sampling locations at TA-15, MDA-Z Open Dump (LA851)..... 4.23-2

4.23.3 Sampling locations at TA-15 MDA-Z Open Dump (LA813)..... 4.23-2

4.23.4 Sampling locations at TA-22 Marsh ..... 4.23-3

4.23.5 Sampling locations at TA-14 Navy Drum Boneyard ..... 4.23-31

4.23.6 Sampling locations at TA-36 Boneyard (LA18) ..... 4.23-3

4.23.7 Sampling locations at TA-36 Boneyard (LA852) ..... 4.23-3

4.24.1 Sampling locations at TA-16 inactive Liquid Waste Disposal Pond (LA819/820) ..... 4.24-30

4.24.2 Sampling locations at TA-16 inactive Liquid Waste Disposal Pond (LA821) ..... 4.24-31

4.24.3 Sampling locations for TA-08-59 Septic Tank ..... 4.24-3

4.24.4 Sampling locations for TA-16-093 abandoned Plating Shop effluent ..... 4.24-33

4.24.5 Sampling locations at TA-46-70 abandoned Sump ..... 4.24-34

4.24.6 Sampling location at TA-35-34 Collection Basin ..... 4.24-35

4.24.7 Borehole/Monitor Well locations at TA-10 ..... 4.24-36

4.25.1 Sampling locations at TA-35, south of Bldg. 207 ..... 4.25-15

4.25.2 Sampling locations at TA-46 north of Bldg. 31 ..... 4.25-16

4.25.3 Sampling locations at TA-32 Drainage Channel ..... 4.25-17

4.26.1 Area of geophysical survey, radiological survey, and sampling locations at TA-08 inactive Firing Site ..... 4.26-16

4.26.2 Radiological survey and soil sampling locations at TA-15 G-point depression ..... 4.26-17

4.26.3 Sampling locations at TA-05 X-Chamber at Mortandad Canyon 4.26-18

4.27.1 Sampling locations at TA-16 GMX-2 Site ..... 4.27-7

TABLES

3.1 Analytes determined by CLP volatiles analysis method ..... 3-10

3.2 Analytes determined by CLP semivolatiles analysis method . 3-15

3.3 Analytes determined by CLP pesticide/PCB analysis method . 3-20

3.4 Analytes determined by HPLC high explosives analysis method ..... 3-23

3.5 Elements determined for inorganics analysis ..... 3-24

4.0.1 A typical completion table ..... 4-4

4.0.2 Example of a data presentation table ..... 4-6

4.0.3 Allowed analytical and total holding times ..... 4-8

4.0.4 Example of a radiological data table ..... 4-14

4.0.5 Regulatory limits and guidelines for environmental contaminants ..... 4-17

4.0.6 Proposed toxicity characteristic leaching procedure (TCLP) contaminants, regulatory limits, and threshold limits .... 4-20

4.0.7 Trace chemical element content of natural soils ..... 4-22

4.1.1 Sample design summary table ..... 4.1-4

4.1.2 LANL - completion table for environmental problem 1 ..... 4.1-1

4.1.3 LANL - inorganic data for environmental problem 1..... 4. 9

4.1.4 LANL - high explosive data for environmental problem 1 ... 4.1-2

4.1.5 LANL - radiological data ..... 4.1-2

4.2.1 LANL - completion table for environmental problem 2 ..... 4.2-18

4.2.2 LANL - volatile organic data for environmental problem 2 . 4.2-1

4.2.3 LANL - semivolatile organic data for environmental problem 2 ..... 4.2-2

4.2.4 LANL - inorganic data for environmental problem 2 ..... 4.2-22

4.2.5 LANL - high explosive data for environmental problem 2 ... 4.2-2

4.2.6 LANL - radiological data for environmental problem 2 ..... 4.2-26

4.3.1 LANL - completion table for environmental problem 3 ..... 4.3-10

4.3.2 LANL - volatile organic data for environmental problem 3 . 4.3-

4.3.3 LANL - semivolatile organic data for environmental problem 3 ..... 4.3-

4.3.4 LANL - inorganic data for environmental problem 3 ..... 4.3-13

4.3.5 LANL - radiological data ..... 4.3-

4.6.1 LANL - completion table for environmental problem 6 ..... 4.6-9

4.6.2 LANL - inorganic data for environmental problem 6 ..... 4.6-

4.6.3 LANL - radiological data for environmental problem 6 ..... 4.6-

4.9.1 LANL - completion table for environmental problem 9 ..... 4.9-11

4.9.2 LANL - volatile organic data for environmental problem 9 .. 4.9-

4.9.3 LANL - semivolatile organic data for environmental problem 9..... 4.9-

4.9.4 LANL - inorganic data for environmental problem 9 ..... 4.9-14

4.9.5 LANL - radiological data for environmental problem 9 ..... 4.9-5

4.10.1 LANL - completion table for environmental problem 10 ..... 4.10-29

4.10.2 LANL - volatile organic data for environmental problem 10 4.10-29

4.10.3 LANL - inorganic data for environmental problem 10 ..... 4.10-32

4.10.4 LANL - high explosive data for environmental problem 10 .... 4.10-35

4.10.5 LANL - asbestos data for environmental problem 10 ..... 4.10-39

4.10.6 LANL - radiological data for environmental problem 10 ..... 4.10-41

4.13.1 LANL - completion table for environmental problem 13 ..... 4.13-10

4.13.2 LANL - volatile organic data for environmental problem 13 .. 4.13-11

4.13.3 LANL - semivolatile organic data for environmental problem 13 ..... 4.13-12

4.13.4 LANL - inorganic data for environmental problem 13 ..... 4.13-13

4.13.5 LANL - radiological data for environmental problem 13 ..... 4.13-14

4.14.1 LANL - completion table for environmental problem 14 ..... 4.14-10

4.14.2 LANL - volatile organic data for environmental problem 14 .. 4.14-11

4.14.3 LANL - inorganic data for environmental problem 14 ..... 4.14-13

4.14.4 LANL - high explosive data for environmental problem 14 .... 4.14-14

4.14.5 LANL - radiological data for environmental problem 14 ..... 4.14-15

4.16.1 LANL - completion table for environmental problem 16 ..... 4.16-10

4.16.2 LANL - volatile organic data for environmental problem 16 .. 4.16-11

4.16.3 LANL - semivolatile organic data for environmental problem 16 ..... 4.16-12

4.16.4 LANL - pesticide/PCB data for environmental problem 16 ..... 4.16-13

4.16.5 LANL - inorganic data for environmental problem 16 ..... 4.16-14

4.16.6 LANL - radiological data for environmental problem 16 ..... 4.16-15

4.19.1 LANL - completion table for environmental problem 19 ..... 4.19-19

4.19.2 LANL - volatile organic data for environmental problem 19 .. 4.19-20

4.19.3 LANL - semivolatile organic data for environmental problem 19 ..... 4.19-22

4.19.4 LANL - pesticide/PCB data for environmental problem 19 ..... 4.19-23

4.19.5 LANL - inorganic data for environmental problem 19 ..... 4.19-25

4.19.6 LANL - radiological data for environmental problem 19 ..... 4.19-27

4.21.1 LANL - completion table for environmental problem 21 ..... 4.21-

4.21.2 LANL - volatile organic data for environmental problem 21 .. 4.2

4.21.3 LANL - pesticide/PCB data for environmental problem 21 ..... 4.

4.21.4 LANL - radiological data for environmental problem 21 ..... 4.21

4.22.1 LANL - completion table for environmental problem 22 ..... 4.22

4.22.2 LANL - volatile organic data for environmental problem 22 .. 4.22-

4.22.3 LANL - semivolatile organic data for environmental problem 22 ..... 4.22-

4.22.4 LANL - pesticide/PCB data for environmental problem 22 ..... 4.22

4.22.5 LANL - inorganic data for environmental problem 22 ..... 4.22-

4.22.6 LANL - high explosive data for environmental problem 22 .... 4.22

4.22.7 LANL - asbestos data for environmental problem 22 ..... 4.22-

4.22.8 LANL - radiological data for environmental problem 22 ..... 4.22-

4.23.1 LANL - completion table for environmental problem 23 ..... 4.23

4.23.2 LANL - volatile organic data for environmental problem 23 .. 4.23-

4.23.3 LANL - semivolatile organic data for environmental problem 23 ..... 4.23-

4.23.4 LANL - inorganic data for environmental problem 23 ..... 4.23

4.23.5 LANL - high explosive data for environmental problem 23 .... 4.23-

4.23.6 LANL - asbestos data for environmental problem 23 ..... 4.2

4.23.7 LANL - radiological data for environmental problem 23 ..... 4.2

4.24.1 LANL - completion table for environmental problem 24 ..... 4.24-

4.24.2 LANL - volatile organic data for environmental problem 24 .. 4.2

4.24.3 LANL - semivolatile organic data for environmental problem 24 ..... 4.2

4.24.4 LANL - pesticide/PCB data for environmental problem 24 ..... 4.24-

4.24.5 LANL - inorganic data for environmental problem 24 ..... 4.2

4.24.6 LANL - high explosive data for environmental problem 24 .... 4.2

4.24.7 LANL - cyanide data for environmental problem 24 ..... 4.2

4.24.8 LANL - radiological data for environmental problem 24 ..... 4.24-61

4.25.1 LANL - completion table for environmental problem 25 ..... 4.25-18

4.25.2 LANL - volatile organic data for environmental problem 25 .. 4.25-19

4.25.3 LANL - semivolatile organic data for environmental problem 25 ..... 4.25-21

4.25.4 LANL - pesticide/PCB data for environmental problem 25 ..... 4.25-23

4.25.5 LANL - inorganic data for environmental problem 25 ..... 4.25-25

4.25.6 LANL - radiological data for environmental problem 25 ..... 4.25-27

4.26.1 LANL - completion table for environmental problem 26 ..... 4.26-19

4.26.2 LANL - volatile organic data for environmental problem 26 .. 4.26-20

4.26.3 LANL - inorganic data for environmental problem 26 ..... 4.26-21

4.26.4 LANL - high explosive data for environmental problem 26 .... 4.26-24

4.26.5 LANL - radiological data for environmental problem 26 ..... 4.26-27

4.27.1 LANL - completion table for environmental problem 27 ..... 4.27-8

4.27.2 LANL - volatile organic data for environmental problem 27 .. 4.27-9

4.27.3 LANL - inorganic data for environmental problem 27 ..... 4.27-10

4.27.4 LANL - high explosive data for environmental problem 27 .... 4.27-12

4.27.5 LANL - radiological data for environmental problem 27 ..... 4.27-14

5.1 Field sampling completeness ..... 5-4

5.2 LANL - completion table for QC requests ..... 5-5

5.3 LANL - volatile organic QC rinsate data ..... 5-13

5.4 LANL - volatile organic QC trip blank data ..... 5-15

5.5 LANL - volatile organic QC miscellaneous data ..... 5-17

5.6 LANL - inorganic rinsate data ..... 5-18

5.7 LANL - LANL - inorganic preserved blank data ..... 5-20

5.8 Adherence to holding time requirements ..... 5-21

5.9 Performance evaluations ..... 5-23

5.10 Adherence to precision requirements ..... 5-28

5.11 Adherence to calibration requirements ..... 5-3

5.12 Adherence to method blank requirements ..... 5

5.13 Adherence to control sample requirements ..... 3

5.14 Adherence to matrix spike requirements ..... 5

5.15 Method blank results for volatile organic compound analyses of soil and water samples ..... 5

5.16 Method blank results for volatile organic compound analyses of soil samples ..... 5

5.17 Rinsate and trip blank results for volatile organic compound analyses of soil and water samples ..... 5

5.18 Rinsate and trip blank results for volatile organic compound analyses of soil gas samples ..... 5

5.19 LANL - radiological data for environmental problem QC ..... 5-4

# DATA FLAGS AND ACRONYMS

An abbreviated list of acronyms and data flags is found inside the back cover as a detached reference guide. The reader will find it convenient to use that guide as a reference while examining the data tables contained in Section 4.

## INORGANIC ANALYSES DATA FLAGS

| | | |
|---|---|---|
| B | - | value is less than the CRDL but greater than IDL |
| E | - | value is estimated because of the presence of interference |
| M | - | duplicate injection precision not met |
| N | - | spiked sample recovery not within control limits |
| NR | - | analyte was not required to be analyzed |
| S | - | value was determined by the method of standard additions (MSA) |
| U | - | analyte was analyzed for but not detected |
| W | - | post-digestion spike for furnace AA analysis is out of control limits (85 to 115%), while sample absorbance is less than 50% of spike absorbance |
| * | - | duplicate analysis not within control limits |
| + | - | correlation coefficient for the MSA is less than 0.995 |
| Methods: | | |
| A | - | flame AA |
| AS | - | semiautomated spectrophotometric |
| AV | - | automated cold vapor AA |
| C | - | manual spectrophotometric |
| CV | - | manual cold vapor AA |
| F | - | furnace AA |
| NR | - | not run, analyte not required to be analyzed |
| P | - | inductively coupled plasma-atomic emission spectrometry |
| T | - | titrimetric |

## ORGANIC ANALYSES DATA FLAGS

| | | |
|---|---|---|
| A | - | TIC is suspected aldol-condensation product |
| B | - | analyte found in associated blank as well as in the sample |
| C | - | pesticide results confirmed by GC/MS |
| C1 | - | Data flag used on high explosives QC tables, indicates analysis performed on column 1 (primary identification column) |
| C2 | - | Data flag used on high explosives QC tables, indicates analysis performed on column 2 (secondary confirmation column) |
| D | - | compound identified at secondary dilution factor |
| E | - | concentration exceeds the calibration range of the instrument |
| J | - | estimated value, less than the CRQL |

| | | |
|---|---|---|
| U | - | compound was analyzed for but not detected |
| X | - | several flags have been combined and are represented by X; footnotes describe the combination |

GENERAL ACRONYMS

| | | |
|---|---|---|
| $A_i$ | - | percent relative atom abundance |
| AA | - | atomic absorption |
| ACGIH | - | American Conference of Government Industrial Hygienists |
| AEC | - | Atomic Energy Commission |
| ALARA | - | as low as reasonably achievable |
| AR | - | atom ratios |
| ASTM | - | American Society for Testing and Materials |
| BFB | - | bromofluorobenzene |
| BHC | - | benzene hexachloride |
| BNA | - | base neutral acid (semivolatile organic compound) |
| CAS | - | Chemical Abstract Service |
| CCB | - | continuing calibration blank |
| CCC | - | calibration check compounds |
| CCS | - | contract compliance screening |
| CCV | - | continuing calibration verification |
| CEARP | - | Comprehensive Environmental Assessment and Restoration Program |
| CEC | - | cation-exchange capacity |
| CERCLA | - | Comprehensive Environmental Response, Compensation and Liability Act |
| cfs | - | cubic feet/second |
| CLP | - | Contract Laboratory Program |
| CN | - | cyanide |
| CNTRL | - | control sample |
| COC | - | chain-of-custody |
| COLIWASA | - | composite liquid waste sampler |
| Cont(ext) | - | continuous liquid-liquid extraction |
| COV | - | coefficient of variation |
| CRDL | - | contract required detection limit |
| CRQL | - | contract required quantitation limit |
| CRREL | - | U.S. Army Cold Regions Research and Engineering Laboratory |
| CVAAS | - | cold vapor atomic absorption spectrometry |
| %D | - | percent difference |
| 2,4-D | - | 2,4-dichlorophenoxyacetic acid |
| DBBP | - | dibutyl butyl phosphonate |
| DBC | - | dibutyl chlorendate |
| DCG | - | derived concentration guides |
| DDD | - | 1,1'-(2,2-dichloroethylidene) bis 4-chlorobenzene |
| DDE | - | 1,1'-(dichloroethenylidiene) bis 4-chlorobenzene |
| DDT | - | dichlorodiphenyltrichloroethane |
| DFTPP | - | decafluorotriphylphosphine |
| DMS | - | data management system |
| DNT | - | dinitrotoluene |

| | | |
|---|---|---|
| DOE | - | U.S. Department of Energy |
| DOE/ES | - | U.S. Department of Energy/Environmental Survey |
| DOE-HQ | - | U.S. Department of Energy-Headquarters |
| DOE-ID | - | U.S. Department of Energy-Idaho Operations Office |
| dpm | - | disintegrations per minute |
| DR | - | direct reading |
| DUP | - | duplicate sample |
| DW | - | drinking water |
| DWS | - | drinking water standards |
| ECD | - | electron capture detector |
| EICP | - | extracted ion current profile |
| EM | - | electromagnetic |
| EMSL-LV | - | U.S. Environmental Protection Agency Environmental Monitoring Systems Laboratory-Las Vegas |
| EMSL-CIN | - | U.S. Environmental Protection Agency Environmental Monitoring Systems Laboratory-Cincinnati |
| EP | - | extraction procedure |
| EPA | - | U.S. Environmental Protection Agency |
| ERDA | - | U.S. Energy Research and Development Administration |
| EVAL | - | pesticide evaluation standard mixture |
| FAAS | - | flame atomic absorption spectrometry |
| FID | - | flame ionization detector |
| FSCC | - | fused silica capillary column |
| GA | - | gross alpha |
| GAB | - | gross alpha and beta |
| GB | - | gross beta |
| GC | - | gas chromatography |
| GC/ECD | - | gas chromotography/electron capture detector |
| GC/FID | - | gas chromatography/flame ionization detection |
| GC/MS | - | gas chromatography/mass spectrometry |
| GFAAS | - | graphite furnace atomic absorption spectrometry |
| GPC | - | gel permeation chromatograph |
| GW | - | groundwater |
| HMX | - | octahydro-1,3,5,7-tetranitro-1,3,5,7-terazine |
| HPLC | - | high performance liquid chromatography |
| HT | - | tritium |
| HZ | - | hydrazine |
| IC | - | ion chromatography |
| ICB | - | initial calibration blank |
| ICP-AES | - | inductively coupled plasma-atomic emission spectrometry |
| ICV | - | initial calibration verification |
| ICV-MS | - | initial calibration verification-mass spectrometry |
| IDL | - | instrument detection limits |
| IMRL | - | INEL Mobile Radiological Laboratory |
| IND | - | pesticide individual standard |
| INEL | - | Idaho National Engineering Laboratory |

| | | |
|---|---|---|
| IS1(BCM) | - | volatile organic internal standard compound (bromochloromethane) |
| IS1(DCB) | - | semivolatile internal standard compound (1,4-dichlorobenzene-d4) |
| IS2(DFB) | - | volatile organic internal standard compound (1,4-difluorobenzene) |
| IS2(NPT) | - | semivolatile internal standard compound (naphthalene-d8) |
| IS3(ANT) | - | semivolatile internal standard compound (acenaphthene-d8) |
| IS3(CB2) | - | volatile organic internal standard compound (chlorobenzene) |
| IS4(PHN) | - | semivolatile internal standard compound (phenanthrene-d10) |
| IS5(CRY) | - | semivolatile internal standard compound (chrysene-d12) |
| IS6(PRY) | - | semivolatile internal standard compound (perylene-d12) |
| LANL | - | Los Alamos National Laboratory |
| LCS | - | laboratory control sample |
| LLW | - | low level waste |
| LOD | - | limit of detection |
| MB | - | method blank (laboratory blank) |
| MCL | - | maximum contaminant level |
| MCLG | - | maximum contaminant level goal |
| MDL | - | method detection limit |
| MEK | - | methyl ethyl ketone |
| MEPAS | - | Multimedia Environmental Pollutant Assessment System |
| MF | - | membrane filter |
| MFL | - | million fibers per liter |
| MIBK | - | methyl isobutyl ketone (4-methyl-2-pentanone) |
| MPA | - | material disposed area |
| MS | - | matrix spike (sample spike) |
| MS%Rec | - | matrix spike percent recovery |
| MSA | - | method of standard addition |
| MSD | - | matrix spike duplicate |
| MSD%Rec | - | matrix spike duplicate percent recovery |
| MSL | - | mean sea level |
| mg | | microgram |
| N | - | number of analyses |
| NA | - | not available or not applicable |
| N/A | - | not analyzed |
| NBS | - | National Bureau of Standards |
| ND | - | not detected |
| NEIC | - | National Enforcement Investigation Center |
| nm | - | nanometers |
| NPDES | - | National Pollutant Discharge Elimination System |
| NS | - | no standard |
| NUS | - | NUS Corporation |
| ORGDP | - | Oak Ridge Gaseous Diffusion Plant |

| | | |
|---|---|---|
| ORNL | - | Oak Ridge National Laboratory |
| OSHA | - | Occupational Safety and Health Administration |
| OVA | - | organic vapor analyzer |
| PAH | - | polyaromatic hydrocarbon |
| PB | - | preparation blank |
| PBLK | - | pesticide method blank |
| PCB | - | polychlorinated biphenyl |
| pCi | - | pico Curies |
| PE | - | performance evaluation |
| PID | - | photoionization detector |
| PLM/DS | - | polarized light microscopy/dispersion staining |
| P/P | - | pesticide/PCB |
| PST | - | pesticide |
| QA | - | quality assurance |
| QB | - | quarterly blind |
| QC | - | quality control |
| %R | - | percent recovery |
| r | - | correlation coefficient |
| RAALP | - | alpha spectrometry |
| RAFLU | - | fluorimetry |
| RAGA | - | gross alpha |
| RAGB | - | gross beta |
| RAGMA | - | gamma spectrometry |
| RAGPC | - | gas proportional (beta) counting |
| RALSC | - | liquid scintillation |
| RAMAS | - | mass spectrometry |
| RANR | - | non-routine method |
| RASCT | - | scintillation counting |
| RASP | - | spectrophotometry |
| RCRA | - | Resource Conservation and Recovery Act |
| RDX | - | hexahydro-1,3,5-trinitro-1,3,5-triazine |
| RE | - | reanalysis |
| REG | - | regular sample |
| RMCL | - | recommended maximum contaminant level |
| RPD | - | relative percent difference |
| RRF | - | relative retention factor |
| RSD | - | relative standard deviation |
| RT | - | retention time |
| S&A | - | sampling and analysis |
| S1(DCB) | - | pesticide surrogate compound (dibutylchlorendate) |
| S1(NBZ) | - | semivolatile surrogate compound (nitrobenzene-d5) |
| S1(TOL) | - | volatile organic surrogate compound (toluene-d8) |
| S2(BFB) | - | volatile organic surrogate compound (bromofluorobenzene) |
| S2(FBP) | - | semivolatile surrogate compound (2-fluorobiphenyl) |
| S3(DCE) | - | volatile organic surrogate compound (1,2-dichloroethane-d4) |
| S3(TPH) | - | semivolatile surrogate compound (terphenyl-d14) |
| S4(PHL) | - | semivolatile surrogate compound (phenol-d5) |
| S5(ZFP) | - | semivolatile surrogate compound (2-fluorophenol) |

| | | |
|---|---|---|
| S6(TBP) | - | semivolatile surrogate compound (2,4,6-tribromophenol) |
| SARA | - | Superfund Amendments and Reauthorization Act of 1986 |
| SBLK | - | semivolatile method blank |
| SD | - | standard deviation |
| SDG | - | sample delivery group |
| SepF (ext) | - | separatory funnel extraction |
| SN | - | suffix number |
| Sonc (ext) | - | sonication extraction |
| SOP | - | standard operating procedure |
| SOW | - | statement of work |
| SPCC | - | system performance check compounds |
| SSTD | - | semivolatile standard |
| STD | - | standard |
| SV | - | semivolatile organic |
| SVOA | - | semivolatile organic analysis |
| SVOC | - | semivolatile organic compound |
| SW | - | surface water |
| TA | - | technical area |
| TBP | - | tributylphosphate |
| TCDD | - | 1,2,7,8-tetrachlorodibenzo-p-dioxin |
| TCL | - | target compound list |
| TCLP | - | toxicity characteristic leaching procedure |
| TIC | - | tentatively identified compound |
| TICP | - | total ion current profile |
| TLV | - | threshold limit value |
| TNB | - | 1,3,5-trinitrobenzene |
| TNT | - | 2,4,6-trinitrotoluene |
| TOC | - | total organic carbon |
| TRU | - | transuranic |
| TSCA | - | Toxic Substances Control Act |
| UNC | - | UNC Nuclear Corporation |
| UNH | - | uranyl nitrate hexahydrate |
| VBLK | - | volatile organic method blank |
| VOA | - | volatile organic analysis |
| VOC | - | volatile organic compound |
| Vol Org | - | volatile organic |
| VOST | - | volatile organic sampling train |
| VSTD | - | volatile organic standard |
| $W_i$ | - | percent relative weight abundance |
| WP | - | water pollution |
| WORM | - | write once read many |
| WTSOL | - | wet solid |

LOS ALAMOS NATIONAL LABORATORIES SAMPLING AND ANALYSIS DATA DOCUMENT

# 1. INTRODUCTION

This document presents the field and analytical data collected by the Idaho National Engineering Laboratory (INEL) Sampling and Analysis (S&A) Team at the Los Alamos National Laboratory (LANL) and is prepared for the U.S. Department of Energy (DOE) Environmental Survey. The LANL Survey Team will use this document to prepare the final environmental findings, which will be presented in the summary LANL report.

This Sampling and Analysis Data Document includes information from the DOE "Environmental Survey Preliminary Report, LANL" (DOE, 1988a), the "Environmental Survey Sampling and Analysis Plan, LANL" (DOE, 1988b), plus field and analytical data. This document references the LANL S&A Plan (DOE, 1988) and The Environmental Survey Manual (DOE, 1987) for details of field and analytical procedures.

Volume I of this document contains six sections. Section 1 provides the site sampling and analysis at the LANL. Section 2 has been deleted. Section 3 provides a brief description of field and analytical procedures. Section 4 contains information on how to evaluate the S&A data. It also contains the main data presentations, and limitations and qualifications for each environmental problem. Section 5 contains an overview and discussion of quality control (QC) data. Section 6 contains references.

Volume II contains Appendices A through F. Appendix A contains an updated listing of sampling and analytical requests. Appendix B presents any available background concentrations of analytes and associated explanatory text. Appendix C includes the findings of the U.S. Environmental Protection Agency (EPA) quarterly blind performance evaluations and independent program audits. Appendix D includes radiological data (QA/QC), Appendix E contains a summary of analytical quality assurance/quality control (QA/QC) information, and Appendix F contains the geophysical survey data.

## 1.1 Site Sampling and Analysis

The DOE assigned the INEL to provide sampling support for the LANL Environmental Survey and to perform the laboratory analytical services. On June 12, 1987, the DOE Survey Team and the INEL S&A Team met to discuss LANL sampling and analysis. the Survey Team provided Final S&A Request Forms to the S&A Team on June 29, 1987.

The S&A Plan was based on the S&A Request Forms developed by the Survey Team and on continued dialogue between the U.S. Department of Energy-Headquarters (DOE-HQ), INEL, and Survey Team technical specialists. This S&A Data Document incorporates information from the preliminary report, S&A Plan, and field and laboratory data. The Survey Team will use this data document, in addition to data collected previously, to produce a summary report for the LANL.

On-site training of sampling personnel and command-post setup commenced on April 25, 1988, and actual field sampling began on April 27, 1988 and continued through June 23, 1988.

The rough draft of this document was prepared by the INEL in April 1989, and subsequently reviewed by the EPA's Environmental Monitoring Systems Laboratory in Las Vegas (EMSL-LV) and the DOE Survey Team.

The INEL S&A Team included personnel from many organizations. Figure 1-1 shows the organizational structure. EG&G Idaho, Inc., managed the project for the DOE Idaho Operations Office (DOE-ID) and also was responsible for all sampling, field analyses, laboratory analyses, data management, and report preparation. Extensive assistance was provided by several other organizations. MSE, Inc. (Multi-Tech Division, Butte, Montana) and UNC Technical Services, Inc. (Grand Junction, Colorado) assisted in the field sampling and document preparing. UNC also conducted most of the laboratory determinations of radionuclides. The INEL and Oak Ridge Gaseous Diffusion Plant (ORGDP), Oak Ridge, Tennessee, conducted all the nonradiological determinations. The Oak Ridge National Laboratory (ORNL) X-10 conducted all high explosive determinations.

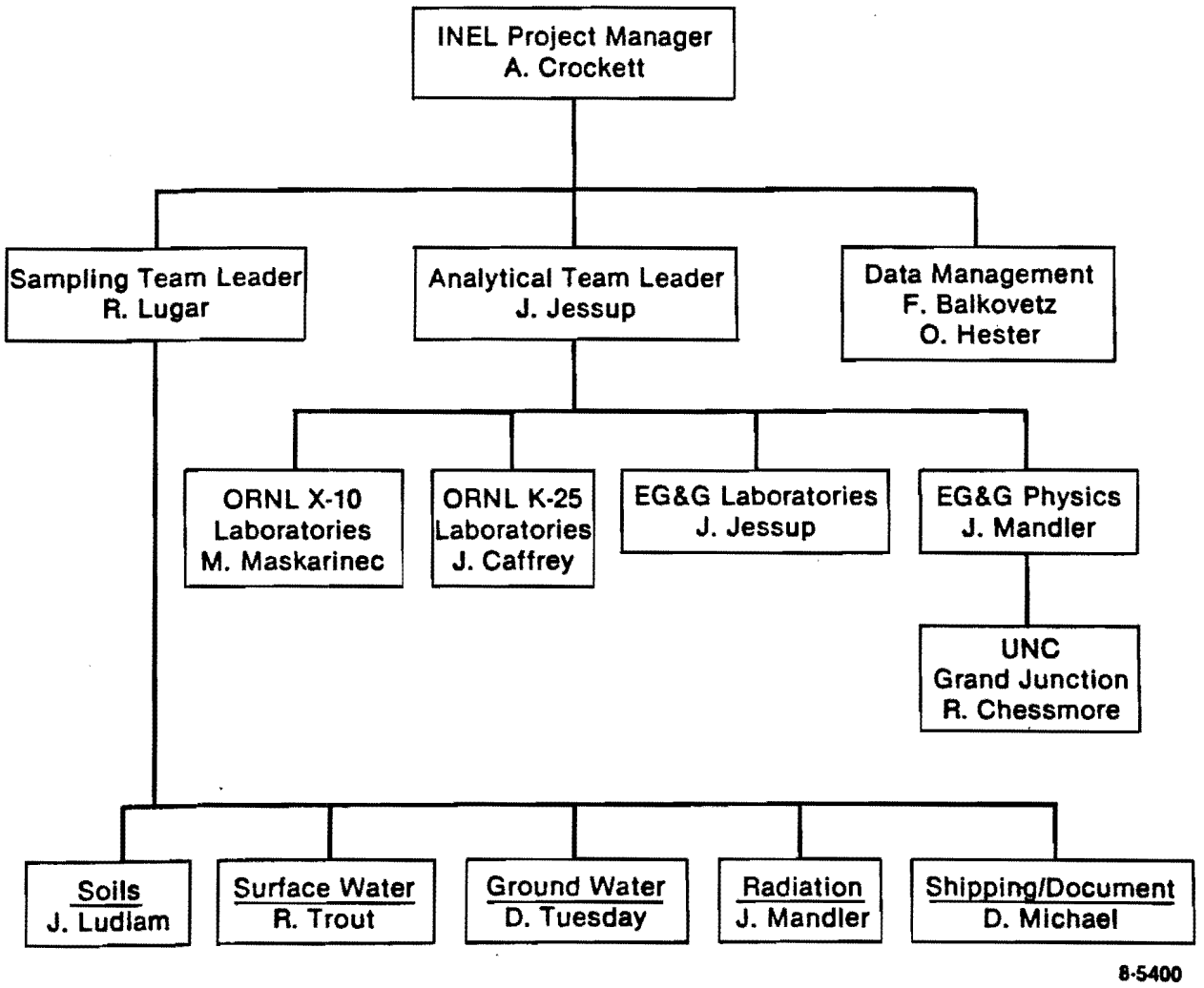


Figure 1-1. Sampling, analysis, and data management team organization.

(BLANK PAGE)

# 2. SUMMARY OF SAMPLING AND ANALYSIS

Section 2 was originally reserved for a summary of the scope and data resulting from the S&A effort. After further consideration, it was decided that the Survey Teams could just as effectively accomplish their objective of modifying the findings by reviewing the data as it appears in Section 4 (Data Presentation). Consequently, Section 2 was deemed to be redundant and unnecessary and is retained only in title so as to avoid inconsistencies with references in the Survey Manual and other sections within the Data Document.

(BLANK PAGE)

# 3. METHODS

Standardized methods and procedures were used for sampling and analysis to provide uniform and comparable results. Field sampling protocols and analytical methods are identified and documented in The Environmental Survey Manual (DOE, 1987). The reader is directed to Appendices D and E for detailed technical descriptions of the analytical and sampling methods summarized in the following sections.

Many sampling procedures in The Environmental Survey Manual (DOE, 1987) have been developed by the American Society for Testing and Materials (ASTM), The National Bureau of Standards (NBS), DOE (radiological assessment procedures), and the U.S. Environmental Protection Agency (EPA). The most analytical chemistry procedures used for the survey were developed by the EPA under the Contract Laboratory Program (CLP).

## 3.1 Field Sampling Methods

The following methods were used for collection of samples of various media types per Appendix E of The Environmental Survey Manual (1987). Sample collection, sample containers, preservation methods, and documentation procedures were as specified in the LANL "Sampling and Analysis Plan" (DOE, 1988b). Any deviations from specified procedures or methods are documented in the field or project logbooks and discussed in Section 4 of this document.

### 3.1.1 Surface Water Sampling Methods

3.1.1.1 Immersion Method. Immersion was the preferred method for collecting grab samples from shallow streams and near the shore of ponds or lakes. The sample bottle was submerged with the opening oriented upstream (for effluent or stream samples). The sample was collected, preserved, capped, and the outside of the bottle was rinsed with clean water (Appendix E4.2.1).

3.1.1.2 Grab Samples by Dipper. In areas with minimal surface water or limited access, grab samples were obtained by slowly submerging a

stainless steel dipper. The dipper was retrieved and the sample was poured into the appropriate sample container, appropriate preservatives were added, and the container was capped (Appendix E4.2.4).

3.1.1.3 Flow Proportional-Composite Sampling. An automated composite sampler was used to obtain more representative liquid-effluent samples (rather than grab samples) of sporadically discharged contaminants from outfalls or streams. Composite samplers were located near the sample point and set to collect a selected volume at a flow-based frequency, over a 24-h time period. The sample was pumped through a Teflon/silicone tube to a 2.5-gal collection jar containing appropriate preservatives and/or cooled with ice. At the conclusion of the 24-h sampling period, subsamples of the composited effluent were then dispensed from the collection jar to the appropriate sample container, depending upon the analyses requested (Appendix E4.2.2).

3.1.1.4 Water Samples for Volatile Organic Analysis by Vial. Grab samples of water for volatile organic analysis (VOA) were collected in 40-mL glass vials with Teflon-coated septums. The vial was slowly submerged upside down, righted, and the cap applied and tightened while the vial was still under water. The vial was removed from the water, shaken, and inverted to check for air bubbles. A lack of bubbles verified an intact sample (Appendix E4.2A).

3.1.1.5 Water Samples for Volatile Organic Analysis by Dipper. Grab samples of water for VOA were obtained by slowly submerging a stainless steel dipper. The dipper containing the water sample was retrieved and the sample decanted into a 40-mL glass vial that was slightly tipped against the dipper. The vial was then capped and checked for air bubbles (Appendix E4.2.3B).

3.1.1.6 Field Measurements. Cole-Parmer pH and conductivity meters were used to determine temperature, conductivity, and pH. Cyanide was measured as required on water samples using Hach™ kits (colorimetric field tests).

### 3.1.2 Solids

The method used for sampling solids (soils, sludge, and sediments) was designed to account for the heterogeneous composition of such solids. Except for samples collected for analysis of VOCs and other designated grab samples, several subsamples from systematic points were collected, sieved through a U.S. Sieve Series No. 10 mesh (2 mm) screen (with the exception of sludges and sediments), composited, thoroughly mixed in disposable aluminum pans using disposable stainless steel spoons, and bottled. A minimum of three subsamples were collected from each sample location (Appendix E5.0). Samples for VOA were not composited but were transferred to sample bottles immediately.

3.1.2.1 Surface Soils. The top 0 to 6 in. of soil was collected using stainless steel 3-in. diameter hand augers by the procedure described above. This resulted in a consistent sample volume and surface area collected.

For trenches and ditches, subsamples were collected equidistant along the centerline of the trench. For spill areas, biased subsamples were obtained from within heavily stained areas. For large surface areas, a systematic grid was typically used to obtain a representative sample (Appendix E5.1).

3.1.2.2 Subsurface Soils. Subsurface soil samples (less than 50 ft in depth) were collected using a variety of techniques. Augers and core samplers were used as soil conditions dictated. Sampling using core samplers were preferred to augered samples because collection depth can be determined more accurately (Appendix E5.2).

3.1.2.2.1 Auger and Hand-Corer Sampling--Samples were collected by augering to the desired sample depth and then removing the auger. The auger tip was replaced with the hand-corer, lowered into position at the sample depth, and turned into the soil. The corer was then withdrawn and the sample collected. Continuous-flight augers were used for all augering. Although it was not feasible to collect samples from specific depths directly off the auger, an auger was used for vertical composite samples when specific depths were of no concern.

3.1.2.3 Sludge and Sediments. Sludge and sediment were usually sampled using a stainless steel or Teflon scoop if the liquid layer over the material was less than 6 in. Gravity or hand-corers were used if the liquid layer was deeper. Corers were used when a relatively undisturbed core sample was needed. The sludge/sediment profile could be examined visually or with portable radiation and organic vapor monitoring instruments before selecting subsamples (Appendix E5.3).

Samples for determining VOCs were collected and placed in sample bottles without mixing or compositing. Samples for other analyses were collected, placed in a disposable aluminum or stainless steel tray, thoroughly mixed with disposable stainless steel spoons, and transferred to sample bottles.

3.1.2.3.1 Scoop Sampling--The scoop method was used to collect composite samples of sludge and sediment. Generally, for sludges that were exposed to air, the first 1 to 2 cm of dried surface material was removed before collecting the sample. At least three subsamples (when possible) were composited to complete a sample, except grab samples for VOA (Appendix E5.3.1).

Septic tank sludge samples were collected using a fine, stainless steel mesh basket, approximately 6-in. diameter, mounted on the end of a telescoping aluminum pole. This allowed the liquids to drain away during sample retrieval, resulting in a satisfactory sludge sample for the sample container.

3.1.2.3.2 Hand-Corer Sampling--The hand corer consists of a stainless steel core barrel and a nosepiece. It has a handle to facilitate driving the corer and a check valve on top to prevent washout during retrieval through a water layer.

The corer was forced into the medium using the handle, then withdrawn using a smooth twisting motion. The core sample was deposited in a stainless steel or aluminum tray. The cores were examined visually and screened with radiation and organic vapor monitoring instruments to determine the areas of the core most likely to contain the highest concentrations of contaminants. Subsamples were collected from those areas and were composited and mixed, except the grab subsamples for VOA. When no areas of interest in the core were identified using field instruments, a subsample for VOA was collected from the middle of the core and transferred to sample bottles (Appendix E5.3.2).

### 3.1.3 Soil Gas Sampling Method

3.1.3.1 Soil Gas Samples for Volatile Organic Analysis. Soil gas samples were collected using 8-ft probes with inner rods, ported tips, disposable drive shields, a stainless steel manifold, and 280-ml evacuated canisters (Alltech). The disposable shield was placed over the ported tip and the entire probe driven to a depth of 4 ft. A retrieval hammer was used to withdraw the probe 1/2 in. to allow the ported tip to be free of the drive shield. A personal air sampling pump was attached to the manifold and was started for 2 min to free the probe of ambient air. A sample needle was then attached to the manifold. The needle was then inserted into the evacuated canister through its septum. Two minutes was allowed before the canister was removed for labeling and shipping.

### 3.1.4 Geophysical Survey Methods

3.1.4.1 Magnetic Field and Magnetic Gradient. A GeoMetrics model 85 proton precession magnetometer/gradiometer was used to measure the magnetic field and magnetic gradient. Readings of the magnetic-field intensity were made at two vertically separated points at each observation point along the observation grid. The lowest sensor was located about 8 ft above the ground surface; the other sensor was placed 2 ft higher. By keeping the sensors elevated, interference from small magnetic items at the surface was reduced relative to larger buried sources.

The total magnetic field values from the higher of two sensors were adjusted for diurnal variation and edited to remove obvious errors and incorrect readings. The values were leveled to a convenient datum, and the residual total field values were then contoured and profiled for each survey line.

The magnetic gradient was calculated by subtracting the field value measured at the upper sensor from that observed at the lower sensor and normalizing to standard distance units (e.g., nT/m). The data were then edited, contoured, and profiled.

3.1.4.2 Electromagnetic. The Geonics EM-31 Terrain Conductivity Meter instrument is a close-spaced, horizontal-loop, inductive Electromagnetic (EM) system (Slingram) operating at 9.7 kHz. Operating at this frequency, the quadrature reading of the instrument is sensitive to the conductivity of the material in the half space in the vicinity of the coils (vertical magnetic dipoles separated by 3.66 m). The Geonics EM-31 is calibrated to read soil conductivity directly. Also, the in-phase reading is routinely recorded; the in-phase is a sensitive indicator of conductors such as metal objects, which are in the vicinity of the instrument.

3.1.4.3 Self Potential. Non-polarizing electrodes (porous pots) and a Beckman voltmeter were used to measure self potential. A reference electrode was installed at a remote location relative to the area to be surveyed. Voltages at points within the area of interest were then measured relative to this electrode. Special non-polarizing electrodes were used at both points and the voltage between the electrodes was measured and recorded. Small areas can be measured relative to a single control point; larger areas are measured by establishing satellite reference points and measuring the voltage within the survey area relative to these points.

3.1.4.4 Induced Polarization (IP)-Resistivity. A Scintrex IPC-8/250 transmitter and IPR-10 receiver were used to measure IP-Resistivity. A pole-pole array was used for the resistivity survey. An electric current was applied into the ground through two electrodes, one within the survey grid and the other located at electrical infinity. The voltage was measured by a potential electrode also within the grid, relative to a fourth electrode, which is far removed from both the survey point and the remote current electrode. The volume of the half space included in the measurement was a function of the "a"-spacing (the distance between the electrodes within the survey grid) of the current and potential electrodes. Normal practice was to make measurements at several "a"-spacings in order to attain high resolution and retain a reasonable depth of exploration. The spacings employed for this survey were 5, 10, and 20 ft.

IP measurements were also made and recorded using the time domain method. The observed readings are the Newmont Standard Time Domain IP chargeability (M) values and correspond to a 450-ms integration window. Measurements were made at the same spacings as used for the resistivity survey.

3.1.4.5 EM (Genie). The Scintrex SE 88 Genie is an inductive EM system operating on frequencies of 112.5 Hz and 3037.5 Hz. The ratio of received proportional DC voltages for the high ($V_{sig}$) to low ($V_{ref}$)

frequency amplitudes is observed at the measurement points. In the presence of a conductive body, the received signal amplitude ratio will approach zero. Since the observed reading (R) is computed by the equation

$$R = [(V_{sig}/V_{ref}) - 1](100\%),$$

conductive bodies are indicated by zones of low or negative percentages.

### 3.1.5 Radiological Survey Method

3.1.5.1 Field Survey for Radioactivity. Radiological Surveys were performed to bias sampling locations. Two instruments were used: a Ludlum Model 19 "Micro R meter" and a Harshaw TASC21 "Phoswich" detector. The "Phoswich" is a scintillation detector used for the detection of low-level radiation in the presence of considerable background. It is particularly useful to detect plutonium in the environment and in other cases of mixed-radiation fields.

The "Micro R meter" detects beta and gamma radiation at higher levels in the environment and is used as a screening instrument.

Both instruments were used to measure background radiation and all the following measurements were background subtracted. Systematic and random surveys were performed by walking over the area with each instrument and noting elevated radiation measurements. These areas were then flagged as locations for sampling.

## 3.2 Analytical Methods

### 3.2.1 Volatile Organic Compounds

Volatile organic contaminants in water, soil, or sediment were determined using the U.S. EPA Contract Laboratory Program Statement of Work (SOW) (1987c), and reported on SOW 1/87 forms. This method, referenced in The Environmental Survey Manual, Appendix D (DOE, 1987), is appropriate for

determining low levels of VOCs in typical environmental matrices and uses purge and trap sample introduction to a gas chromatograph-mass spectrometer (GC/MS). The protocol requires identification and quantitation of all 34 target VOCs, and up to 10 unknown VOCs, referred to as tentatively identified compounds (TICs).

The power of the purge and trap GC/MS technique lies in its ability to generate data with a known degree of qualitative and quantitative confidence. The CLP contract required quantitation limits (CRQLs) for the volatile target compound list (TCL) are shown in Table 3.1. The CRQL establishes concentration levels above which the maximum analytical uncertainty in the reported value is 33% of the value reported. In general, the participant laboratories have the ability to detect and quantitate VOCs at levels below these CRQL values. Data reported for VOCs at levels below the CRQL are subject to the same confirmation criteria as that required for higher concentration determinations. A value reported below the CRQL represents an estimated concentration (i.e., >33% analytical uncertainty) but a positive qualitative result. Data reported at these low levels are flagged with a "J" qualifier, which indicates that the quantitative value associated with the analyte is an estimated value.

Estimated value flags ("E" qualifier) are applied to results that exceed the high end of the calibration curve. In these cases, the compound identification is not in question; however, the reported value is estimated and may be biased low.

The CRQLs for solid samples are sample-specific and are typically higher than the values shown in Table 3.1. The magnitude of the CRQL for a particular sample depends upon the percent moisture of the sample, the amount used for analysis, and any dilution factors introduced during analysis. The CRQLs for aqueous samples should match those shown in Table 3.1, provided that the protocol-specified volume is used and that no dilution factors are introduced.

TABLE 3.1 ANALYTES DETERMINED BY CLP VOLATILES ANALYSIS METHOD

| Analyte | CAS Number | Contract Required Quantitation Limits[a] Water (µg/L) | Low Soil/Sediment[b,c] (µg/kg) |
|---|---|---|---|
| Acetone | 67-64-1 | 10 | 10 |
| Benzene | 71-43-2 | 5 | 5 |
| Bromodichloromethane | 75-27-4 | 5 | 5 |
| Bromomethane | 74-83-9 | 10 | 10 |
| Bromoform | 75-25-2 | 5 | 5 |
| 2-Butanone | 78-93-3 | 10 | 10 |
| Carbon disulfide | 75-15-0 | 5 | 5 |
| Carbon tetrachloride | 56-23-5 | 5 | 5 |
| Chlorobenzene | 108-90-7 | 5 | 5 |
| Chloroethane | 75-00-3 | 10 | 10 |
| Chloroform | 67-66-3 | 5 | 5 |
| Chloromethane | 74-87-3 | 10 | 10 |
| Dibromochloromethane | 124-48-1 | 5 | 5 |
| 1,1-Dichloroethane | 75-35-3 | 5 | 5 |
| 1,2-Dichloroethane | 107-06-2 | 5 | 5 |
| 1,1-Dichloroethene | 75-35-4 | 5 | 5 |
| 1,2-Dichloroethene (total) | 540-59-0 | 5 | 5 |
| 1,2-Dichloropropane | 78-87-5 | 5 | 5 |
| cis-1,3-Dichloropropene | 10061-01-5 | 5 | 5 |
| trans-1,3-Dichloropropene | 10061-02-6 | 5 | 5 |
| Ethylbenzene | 100-41-4 | 5 | 5 |
| 2-Hexanone | 591-78-6 | 10 | 10 |
| Methylene chloride | 75-09-2 | 5 | 5 |
| 4-Methyl-2-pentanone | 108-10-1 | 10 | 10 |
| Styrene | 100-42-5 | 5 | 5 |
| 1,1,2,2-Tetrachloroethane | 79-34-5 | 5 | 5 |
| Tetrachloroethene | 127-18-4 | 5 | 5 |
| Toluene | 108-88-3 | 5 | 5 |
| 1,1,1-Trichloroethane | 71-55-6 | 5 | 5 |
| 1,1,2-Trichloroethane | 79-00-5 | 5 | 5 |

TABLE 3.1 (continued)

| Analyte | CAS Number | Contract Required Quantitation Limits[a] Water (µg/L) | Low Soil/Sediment[b,c] (µg/kg) |
|---|---|---|---|
| Trichloroethene | 79-01-6 | 5 | 5 |
| Vinyl acetate | 108-05-4 | 10 | 10 |
| Vinyl chloride | 75-01-4 | 10 | 10 |
| Xylene (total) | 133-02-7 | 5 | 5 |

a. Specific quantitation limits are highly matrix dependent. The quantitation limits listed herein are provided for guidance and may not always be achievable.

b. CRQL for volatiles at medium concentration for soil/sediment are 100 times the listed CRQL for VOCs at low levels in soil/sediment.

c. Quantitation limits listed for soil/sediment are based on wet weight. The quantitation limits calculated by the laboratory for soil/sediment are calculated on dry weight basis as required by the protocol and will be higher.

Samples collected for the determination of VOCs were maintained in a carefully controlled environment and analyzed as soon as possible to ensure that the samples analyzed by the laboratory accurately represented the samples collected in the field. Elevated temperature, light, biological organisms, sample bottle headspace, and chemical changes over time are some of the factors that can complicate or compromise the analysis process. In addition, consideration was given to the impact of sampling materials or procedures on VOCs, particularly when VOCs were present at low levels. Turbulent mixing or aeration of the sample tends to result in the loss of low levels of volatile compounds. Certain sampling materials can cause contamination of the sample matrix with VOCs. These factors must be taken into consideration when interpreting or comparing data.

Volatile organic analytes in soil gas were analyzed according to a method developed by INEL Environmental Chemistry. Soil gas samples were collected in the field using 280-mL evacuated canisters (Alltech). The

canisters were transported to the laboratory where a 25-mL sample aliquot was removed using a 25-mL gas-tight syringe and injected into a 25-mL sparge tube. The sparge tube contained 5 mL of reagent water that had been previously spiked with internal standards and surrogates in accordance with the U.S. EPA CLP SOW (1987c) for low-level VOCs in water. Quality control acceptance criteria employed for soil gas analysis were those used for low level water samples found in the U.S. EPA CLP SOW (1987c). Soil gas sample data were reported on 1/87 CLP SOW forms.

Interferences introduced by the sample matrix are minimized by purge and trap sample introduction and are monitored by internal standard areas and surrogate percent recoveries. In the case of soil and sediment samples, matrix interferences are common (matrix effects do not pertain to soil gases). An assessment of the impact of the sample matrix is made on a case-by-case basis. For example, determining VOCs in ash-type materials is complicated by the sample matrix acting as a somewhat crude, but effective, sorbent for some VOCs. This characteristic may be reflected by poor surrogate recoveries. The matrix does not preclude determination of volatiles, but the data quality assessment must reflect the limitations imposed by the sample matrix.

Interpreting VOA data requires an assessment of the impact of holding times on data quality. The CLP protocol requires that VOA samples for volatile organic analysis be analyzed within 10 days of sample receipt at the laboratory (analytical holding time). Survey procedures require VOA be performed within the regulatory total holding time of 14 days from sample collection. Samples that exceed the total holding time can still provide useful information as long as the data are interpreted with caution. Quantitative values will generally be less than they would have been if analyzed within holding times, mainly due to degradation and loss of VOCs. Holding times for soil gas samples using evacuated canisters have not been established.

QC data for VOAs were checked as the samples were analyzed to make sure the data were within CLP QC limits. However, due to receipt of samples exceeding the laboratories' actual analytical capacity (vs. the planned capacity), some of the samples with non-compliant QC data were reanalyzed after total holding time limits had been exceeded.

### 3.2.2 Semivolatile Organic Compounds

Semivolatile organic contaminants in water, soil, or sediment were determined using the U.S. EPA CLP SOW (1987c), as referenced in Appendix D of The Environmental Survey Manual (DOE, 1987) and reported on SOW 1/87 Forms. This set of analytical protocols is appropriate for determining low levels of semivolatile organic compounds (SVOC) in environmental matrices. The analytical method involves extraction of the semivolatile contaminants from the environmental matrix, concentration of the extract, and analysis of the extract by GC/MS. The protocol requires identification and quantitation of the 65 target compounds shown in Table 3.2 and up to 20 unknown SVOCs, referred to as TICs.

SVOCs are serially extracted from aqueous samples with methylene chloride at a pH greater than 11 and again at a pH less than 2. The methylene chloride extracts are dried and concentrated separately. Low-level soil samples are mixed with anhydrous powdered sodium sulfate and serially extracted with 1:1 methylene chloride/acetone using an ultrasonic probe. The methylene chloride containing extracted semivolatile organics is then collected by distillation and concentrated. All extracts are stored at 4°C in the dark until they are analyzed using GC/MS. If extracts are to be held for >40 days, the base/neutral and acid fractions are stored separately at -20°C. Target compounds are identified on the basis of (a) elution of the component at the GC relative retention time as the standard component, and (b) correspondence of the sample component and standard component mass spectra. A search of the 1985 NBS Mass Spectral Library is used to provide tentative identification for up to 20 non-TCL compounds (TICs) of greatest apparent concentration contained in a sample extract.

The GC/MS technique is extremely selective, allowing the laboratory to generate data with a known degree of qualitative and quantitative confidence. The CLP CRQLs for the target SVOCs are shown in Table 3.2. The CRQL establishes concentration levels above which the maximum analytical uncertainty in the reported value is 33% of the value reported. In general, the GC/MS instrumentation is capable of detecting and quantifying semivolatile constituents at levels below the CRQL value for a given analyte. Data reported for SVOCs at levels below the CRQL are subject to the same confirmation criteria as those required for higher concentration contaminants. A value reported below the CRQL represents an estimated concentration (i.e., >33% analytical uncertainty) but a positive qualitative result. Data reported at these low levels are flagged with a "J" qualifier, which indicates the quantitative value associated with the positive qualitative result is an estimated value.

The CRQLs for solid samples are sample-specific and are typically higher than the values shown in Table 3.2. The magnitude of the CRQL for a particular sample depends upon the percent moisture of the sample, the amount used for analysis, and any dilution factors introduced during analysis. The CRQLs for aqueous samples should match those shown in Table 3.2, provided that the protocol-specified volume is used and that no dilution factors are introduced.

Samples collected for the determination of SVOCs were maintained in a carefully controlled environment for a minimum period of time to ensure that the sample extracted by the laboratory accurately represented the sample collected in the field. Elevated temperature, light, biological organisms, and chemical changes over time (in the sample or extract) are some of the factors that can complicate or compromise the extraction/analysis procedure. In addition, consideration must be given to the impact of sampling materials or procedures, as well as the sample preparation (extraction) process, on SVOCs. These considerations are especially pertinent to samples containing very low levels of SVOC contamination. Introduction of phthalate esters from gloves worn by sampling and laboratory personnel is a common problem. Although stringent cleaning procedures are used to minimize laboratory contamination, contaminated glassware in the

TABLE 3.2 ANALYTES DETERMINED BY CLP SEMIVOLATILES ANALYSIS METHOD

| Analyte | CAS Number | Contract Required Quantitation Limits[a] Water (µg/L) | Low Soil/Sediment[b,c] (µg/kg) |
|---|---|---|---|
| Acenaphthene | 83-32-9 | 10 | 330 |
| Acenaphthylene | 208-96-8 | 10 | 330 |
| Anthracene | 120-12-7 | 10 | 330 |
| Benzo(a)anthracene | 56-55-3 | 10 | 330 |
| Benzo(b)fluoranthene | 205-99-2 | 10 | 330 |
| Benzo(k)fluoranthene | 207-08-9 | 10 | 330 |
| Benzo(g,h,i)perylene | 191-24-2 | 10 | 330 |
| Benzo(a)pyrene | 50-32-8 | 10 | 330 |
| Benzoic Acid | 65-85-0 | 50 | 1600 |
| Benzyl Alcohol | 100-51-6 | 10 | 330 |
| 4-Bromophenyl-Phenylether | 101-55-3 | 10 | 330 |
| Butyl Benzyl Phthalate | 85-68-7 | 10 | 330 |
| 4-Chloroaniline | 106-47-8 | 10 | 330 |
| bis(2-Chloroethoxy)methane | 111-91-1 | 10 | 330 |
| bis(2-Chloroethyl)ether | 111-44-4 | 10 | 330 |
| bis(2-Chloroisopropyl)ether | 39638-32-9 | 10 | 330 |
| 2-Chloronaphthalene | 91-58-7 | 10 | 330 |
| 2-Chlorophenol | 95-57-8 | 10 | 330 |
| 4-Chlorophenyl Phenylether | 7005-72-3 | 10 | 330 |
| 4-Chloro-3-methylphenol | 59-50-7 | 10 | 330 |
| Chrysene | 218-01-9 | 10 | 330 |
| Di-n-butyl Phthalate | 84-74-2 | 10 | 330 |
| Di-n-octyl Phthalate | 117-84-0 | 10 | 330 |
| Dibenz(a,h)anthracene | 53-70-3 | 10 | 330 |
| Dibenzofuran | 132-64-9 | 10 | 330 |
| 1,2-Dichlorobenzene | 95-50-1 | 10 | 330 |
| 1,3-Dichlorobenzene | 541-73-1 | 10 | 330 |
| 1,4-Dichlorobenzene | 106-46-7 | 10 | 330 |
| 3,3'-Dichlorobenzidine | 91-94-1 | 20 | 660 |
| 2,4-Dichlorophenol | 120-83-2 | 10 | 330 |
| Diethylphthalate | 84-66-2 | 10 | 330 |
| 2,4-Dimethylphenol | 105-67-9 | 10 | 330 |

TABLE 3.2 (continued)

| Analyte | CAS Number | Contract Required Quantitation Limits[a] Water (µg/L) | Low Soil/Sediment (µg/kg) |
|---|---|---|---|
| Dimethyl Phthalate | 131-11-3 | 10 | 330 |
| 2,4-Dinitrophenol | 51-28-5 | 50 | 1600 |
| 2,4-Dinitrotoluene | 121-14-2 | 10 | 330 |
| 2,6-Dinitrotoluene | 606-20-2 | 10 | 330 |
| 4,6-Dinitro-2-methylphenol | 534-52-1 | 50 | 1600 |
| bis(2-Ethylhexyl)phthalate | 117-81-7 | 10 | 330 |
| Fluoranthene | 206-44-0 | 10 | 330 |
| Fluorene | 86-73-7 | 10 | 330 |
| Hexachlorobenzene | 118-74-1 | 10 | 330 |
| Hexachlorobutadiene | 87-68-3 | 10 | 330 |
| Hexachlorocyclopentadiene | 77-47-4 | 10 | 330 |
| Hexachloroethane | 67-72-1 | 10 | 330 |
| Indeno(1,2,3-cd)pyrene | 193-39-5 | 10 | 330 |
| Isophorone | 78-59-1 | 10 | 330 |
| 2-Methylnaphthalene | 91-57-6 | 10 | 330 |
| 2-Methylphenol | 95-48-7 | 10 | 330 |
| 4-Methylphenol | 106-44-5 | 10 | 33[illegible] |
| 2-Nitroaniline | 88-74-4 | 50 | 1600 |
| 2-Nitrophenol | 88-75-5 | 10 | 330 |
| N-Nitroso-dipropylamine | 621-64-7 | 10 | 330 |
| N-Nitrosodiphenylamine | 86-30-6 | 10 | 330 |
| Naphthalene | 91-20-3 | 10 | 330 |
| Nitrobenzene | 98-95-3 | 10 | 330 |
| 3-Nitroaniline | 99-09-2 | 50 | 1600 |
| 4-Nitroaniline | 100-01-6 | 50 | 1600 |
| 4-Nitrophenol | 100-02-7 | 50 | 1600 |
| Pentachlorophenol | 87-86-5 | 50 | 1600 |
| Phenanthrene | 85-01-8 | 10 | 330 |
| Phenol | 108-95-2 | 10 | 330 |
| Pyrene | 129-00-0 | 10 | 330 |

TABLE 3.2 (continued)

| Analyte | CAS Number | Contract Required Quantitation Limits[a] Water (µg/L) | Low Soil/Sediment[b,c] (µg/kg) |
|---|---|---|---|
| 1,2,4-Trichlorobenzene | 120-82-1 | 10 | 330 |
| 2,4,5-Trichlorophenol | 95-95-4 | 50 | 1600 |
| 2,4,6-Trichlorophenol | 88-06-2 | 10 | 330 |

a. Specific quantitation limits are highly matrix dependent. The quantitation limits listed herein are provided for guidance and may not always be achievable.

b. Quantitation limits listed for soil/sediment are based on wet weight. The quantitation limits calculated by the laboratory for soil/sediment are calculated on dry weight basis as required by the protocol and will be higher.

c. The CRQL for semivolatiles using the medium level protocol for soil/sediment are 60 times the listed CRQL for semivolatiles at low levels in soil/sediment.

sample preparation process can also lead to erroneous results when analyzing for low levels of semivolatile analytes. All of these factors must be taken into consideration when interpreting or comparing data.

Poor extraction efficiency of targeted analytes due to sample matrix effects is monitored using GC (i.e., instrumental) response for internal standard areas, as well as surrogate and matrix spike recoveries. Aqueous samples exhibit few problems from a matrix perspective. In the case of soil samples, adverse matrix effects are more common. The soil may act as a sorbent for SVOCs. This characteristic is reflected by poor surrogate and/or matrix spike recoveries. Limitations due to adverse matrix effects must be considered during data quality assessment.

Interpreting semivolatile organic analysis (SVOA) data requires assessing the impact of holding times on data quality. The CLP protocol requires that aqueous samples must be extracted within 5 days of sample

receipt, and soil samples must be extracted within 10 days of sample receipt. The total allowable holding times for SVOA are 7 days and 14 days from sample collection for water and soil, respectively. Samples that have exceeded the total holding time may still provide useful information as lo as the data are interpreted with caution. Quantitative values may be different than they would have been if the sample had been extracted within the holding time because of potential degradation of some of the SVOCs. Although the CLP SOW requires analysis of extracts within 40 days of extraction, this is a contractual rather than a technical constraint. Sample extracts that exceed the 40-day holding time do not appear to be compromised, and the data can still be used with confidence as long as extracts were stored (base/neutral and acid fractions separate) at less than 0°C between the time of final extract concentration and GC/MS analysis.[a]

### 3.2.3 Pesticide/PCBs

Selected pesticides and polychlorinated biphenyls (PCBs) present as contaminants in water, soil, or sediment were determined using the U.S. EPA SOW (1987c), as referenced in Appendix D of The Environmental Survey Manual (DOE, 1987). This set of analytical protocols is appropriate for determin low levels of pesticides and PCBs in environmental matrices. The analytical method involves extraction of these contaminants from the environmental matrices with methylene chloride, concentration of the extracts, and analysis of the extracts by gas chromatography/electron capture detector (GC/ECD). If pesticides or PCBs are tentatively identified, a second GC/ECD analysis is performed using an alternative chromatographic column for positive identification. Confirmation by GC/MS is seldom performed due to insufficient concentration of the pesticides and PCBs in the sample. The protocol requires identification and quantitation of 27 target compounds.

The GC/ECD technique is an extremely sensitive method for detecting pesticides and PCBs. The laboratory is required to meet or exceed the CRQL

---

a. Transmittal letter from Peter C. Lindahl to Janine Jessup, Minutes from the Analytical Technical Committee held on July 28 at USEPA EMSL-LV, August 25, 1987.

of the pesticide/PCB TCL, as shown in Table 3.3. The GC/ECD method can generally detect these analytes at levels below those defined in the CRQL.

The CRQLs for solid samples are sample-specific and are typically higher than the values shown in Table 3.3. The magnitude of the CRQL for a particular sample depends upon the percent moisture of the sample, the amount used for analysis, and any dilution factors introduced during analysis. The CRQLs for aqueous samples should match those shown in Table 3.3, provided that the protocol-specified volume is used and that no dilution factors are introduced.

Samples collected for the determination of pesticides and PCBs were maintained in a carefully controlled environment and analyzed as soon as possible to ensure that the samples extracted by the laboratory accurately represent the samples collected in the field. Elevated temperature, light, chemical changes over time, and biological activity may compromise or complicate the extraction and analysis procedure. Consideration must be given to the impact of sampling materials and techniques as well as the sample extraction on the target compounds. Other halogenated or electrophilic compounds present in the samples may compromise the ability of the analysis to identify pesticides or PCBs present in the matrices.

Contaminated glassware or instrumentation may also lead to erroneous results when performing GC/ECD analysis. Although stringent cleaning procedures are used to minimize laboratory contamination, it must be considered when interpreting very low level pesticide or PCB data.

Poor extraction efficiency due to sample matrix effects is monitored by surrogate and matrix spike recoveries. Aqueous samples exhibit few matrix effects. In soil samples, matrix effects are more common and may be due to the soil acting as a sorbent. This characteristic is reflected by poor surrogate and/or poor matrix spike recoveries. The data quality assessment must reflect the limitations imposed by the sample matrix.

TABLE 3.3 ANALYTES DETERMINED BY CLP PESTICIDE/PCB ANALYSIS METHOD

| Analyte | CAS Number | Contract Required Quantitation Limi[illegible] Water (µg/L) | Low So[illegible] Sediment[illegible] (µg/kg) |
|---|---|---|---|
| aldrin | 309-00-2 | 0.05 | 8.0 |
| aroclor-1016 | 12674-11-2 | 0.5 | 80.0 |
| aroclor-1221 | 11104-28-2 | 0.5 | 80.0 |
| aroclor-1232 | 11141-16-5 | 0.5 | 80.0 |
| aroclor-1242 | 53469-21-9 | 0.5 | 80.0 |
| aroclor-1248 | 12672-29-6 | 0.5 | 80.0 |
| aroclor-1254 | 11097-69-1 | 1.0 | 160.0 |
| aroclor-1260 | 11096-82-5 | 1.0 | 160.0 |
| alpha-BHC | 319-84-6 | 0.05 | 8.0 |
| beta-BHC | 319-85-7 | 0.05 | 8.0 |
| delta-BHC | 319-86-8 | 0.05 | 8.0 |
| gamma-BHC (lindane) | 58-89-9 | 0.05 | 8.0 |
| alpha-chlordane | 5103-71-9 | 0.5 | 80.0 |
| gamma-chlordane | 5103-74-2 | 0.5 | 80.0 |
| dieldrin | 60-57-1 | 0.10 | 16.0 |
| 4,4'-DDD | 72-54-8 | 0.10 | 16.0 |
| 4,4'-DDE | 72-55-9 | 0.10 | 16.0 |
| 4,4'-DDT | 50-29-3 | 0.10 | 16.0 |
| endosulfan I | 959-98-8 | 0.05 | 8.0 |
| endosulfan II | 33213-65-9 | 0.10 | 16[illegible] |
| endosulfan sulfate | 1031-07-8 | 0.10 | 16[illegible] |
| endrin | 72-20-8 | 0.10 | 16.0 |
| endrin ketone | 53494-70-5 | 0.10 | 16.0 |
| heptachlor | 76-44-8 | 0.05 | 8.0 |
| heptachlor epoxide | 1024-57-3 | 0.05 | 8.0 |
| methoxychlor | 72-43-5 | 0.5 | 80.0 |
| toxaphene | 8001-35-2 | 1.0 | 160.0 |

a. Specific quantitation limits are highly matrix dependent. The quantitat[illegible] limits listed herein are provided for guidance and may not always be achievable.

b. Quantitation limits listed for soil/sediment are based on wet weight. T[illegible] quantitation limits calculated by the laboratory for soil/sediment are calculated on dry weight basis as required by the protocol and will be higher.

c. Medium soil/sediment contract required quantitation limits (CRQL) for pesticide/PCB TCL compounds are 15 times the individual low soil/sediment CRQ[illegible]

Interpretation of pesticide/PCB data requires an assessment of the impact of holding times on data quality. The CLP protocol requires that aqueous samples be extracted within 5 days of receipt and soils within 10 days. Allowed total holding times for pesticide/PCB analysis are 7 days and 14 days from sample collection for water and soil, respectively. Samples that have exceeded the total holding time can still provide useful information as long as the data are interpreted with caution. Extracts were stored at less than 0°C between the time of extraction and analysis to ensure that the extract sample quality was not compromised.

### 3.2.4 High Explosives

There is no EPA standard method for the determination of munitions and munitions by-products in soil. ORNL X-10 analyzed these samples, using methods which have been tested at the U.S. Army Cold Regions Research and Engineering Laboratory (CRREL), Hanover, New Hampshire. These methods are applicable for five munitions and three by-products. These include the following:

- octahydro-1,3,5,7-tetranitro-1,3,5,7-tetrazine (HMX)
- hexahydro-1,3,5-trinitro-1,3,5-triazine (RDX)
- N-methyl-N-2,4,6-tetranitroanaline (Tetryl)
- 2,4,6-trinitrotoluene (TNT)
- 2,4-dinitrotoluene (2,4-DNT)
- 2,6-dinitrotoluene (2,6-DNT)
- 1,3,5-trinitrobenzene (TNB)
- 1,3-dinitrobenzene (DNB).

There is no holding time established for munitions and munitions by-products, which may be considered as thermally unstable SVOCs. However, the EPA/DOD Preanalytical Holding Time Study suggests that the holding time is as critical for soil/water samples possibly containing explosives as fo similar samples containing semivolatile base/neutral/acid species. In general, initial extraction of a soil sample was performed within 24 h and certainly within a week of sample receipt. Water samples do not require extraction and may be analyzed immediately upon receipt. Sample and temporary archival storage employs refrigerators maintained at 4°C.

Aqueous and soil samples are extracted with acetonitrile. The soil samples are never oven-dried prior to analysis but are analyzed on an "as is" basis, due to the thermal instability of munitions and their by-products. The extract is centrifuged and an aliquot filtered and diluted with distilled water. The treated samples are eluted from an octadecylsilane (C18 or ODS) reversed-phase high performance liquid chromatography (HPLC) column with a mixture of water/acetonitrile/methanol (50/25/25 v/v/v) flowing at 0.8 mL/min. An ultraviolet absorbance detector with a 254 nanometer (nm) fixed filter is employed for quantitating the eight analytes. Experimentally determined retention times are used for the initial identification of candidate explosive peaks. Peak areas are used for quantitation.

The identity of the explosives are confirmed by HPLC using a cyano column that exhibits normal-phase behavior and, therefore, reverses the order of elution for most of the analytes. A water/methanol (50/50 v/v) solvent is used to elute the explosives from the normal-phase cyano column; the monitoring wavelength is the same.

All quantitations were performed using the method of external standards. Four independently generated standards covering the range of 0.2 to 1.6 μg/mL of each munition or munition by-product are used to generate the working calibration curve. One set of standards is analyzed with each lot of water or soil samples. The detection limits for munitions and munitions by-products are shown in Table 3.4.

TABLE 3.4 ANALYTES DETERMINED BY HPLC HIGH EXPLOSIVES ANALYSIS METHOD

| Analyte | CAS Number | Detection Limits[a] Water (µg/mL) | Detection Limits[a] Soil/Sediment[b] (µg/g) |
|---|---|---|---|
| DNB | 99-65-0 | 0.1 | 1 |
| 2,4-DNT | 121-14-2 | 0.1 | 1 |
| 2,6-DNT | 606-20-2 | 0.1 | 1 |
| HMX | 2691-41-0 | 0.3 | 2 |
| RDX | 121-82-4 | 0.2 | 2 |
| Tetryl | 479-45-8 | 0.1 | 1 |
| TNB | 99-35-4 | 0.1 | 1 |
| TNT | 118-96-7 | 0.1 | 1 |

a. Specific detection limits are highly matrix dependent. The detection limits listed are provided for guidance and may not always be achievable.

b. Detection limits are always reported on a wet weight basis, due to the thermal instability of the munitions and their by-products.

### 3.2.5 Inorganic Analytes

Inorganic analytes, in the context of The Environmental Survey Manual (DOE, 1987), refers to elemental analysis for the 23 metals listed in Table 3.5. The determination of these elements was accomplished by use of protocols established in The Environmental Survey Manual, Appendix D, (DOE, 1987), based on the U.S. EPA CLP SOW for Inorganic Analysis (1987d). The method cited is composed of an acid digestion sample preparation step followed by spectrometric analysis of the prepared sample. Analysis of the prepared samples may be performed by several different spectrometric methods: graphite furnace atomic absorption spectrometry (GFAAS), cold vapor atomic absorption spectrometry (CVAAS), flame atomic absorption spectrometry (FAAS), or inductively coupled plasma atomic emission spectrometry (ICP-AES). Some elements are best analyzed by a particular method; thus, the choice of method is analyte specific, and a combination of several of the spectrometric techniques may have been used on a single sample to determine all of the elements included in a request for inorganics analysis.

TABLE 3.5. ELEMENTS DETERMINED FOR INORGANICS ANALYSIS

| Element | DOE ICP Method Detection Limits for ICP Metals[a] (µg/L) | EPA CLP Contract Required Detection Limits for CLP Metals[b] (µg/L) |
|---|---|---|
| Aluminum | 200 | 200 |
| Antimony | 150 | 60[c] |
| Arsenic | 250 | 10[c] |
| Barium | 200 | 200 |
| Beryllium | 5 | 5 |
| Cadmium | 20 | 5 |
| Calcium | 5000 | 5000 |
| Chromium | 10 | 10 |
| Cobalt | 50 | 50 |
| Copper | 25 | 25 |
| Iron | 100 | 100 |
| Lead | 200 | 5[c] |
| Magnesium | 5000 | 5000 |
| Manganese | 15 | 15 |
| Mercury | ND[d] | 0.2[d] |
| Nickel | 40 | 40 |
| Potassium | 5000 | 5000 |
| Selenium | 400 | 5[c] |
| Silver | 30 | 10 |
| Sodium | 5000 | 5000 |
| Thallium | 500 | 10[c] |
| Vanadium | 50 | 50 |
| Zinc | 20 | 20 |

a. These MDL are the instrument detection limits obtained in pure water that must be met using the procedure. The detection limits for samples may be considerably higher, depending on the sample matrix.

b. These CRDL are the ICP-AES, GFAAS, and CVAAS detection limits obtained in pure water that must be met using the procedure. The detection limits for samples may be considerably higher, depending on the sample matrix.

c. GFAAS may be required to attain the CRDLs for these elements.

d. ND is not detected. Mercury is determined using the CVAAS method.

The spectrometric methods all determine elemental concentrations in the samples, (i.e., they provide total content of a particular element but do not provide information about the chemical species in which the elements are present). The atomic absorption methods are single element techniques, (i.e., only one element may be determined at a time). ICP-AES is a multielement technique that is capable of determining many elements simultaneously or in rapid succession. Because ICP-AES is the faster technique, most of the elements in the inorganic compounds list were analyzed by this method. GFAAS and CVAAS are, in general, more sensitive than ICP-AES and FAAS and are the methods of choice when very low levels of elements must be quantitated. FAAS is used primarily as a backup technique to ICP-AES because its sensitivity is similar to that of ICP-AES for most elements.

Each of the methods has its own strengths and weaknesses. There are three basic types of interferences with the spectrometric techniques: physical, chemical, and spectral. Physical and chemical effects are most common with the atomic absorption methods, and ICP-AES experiences all of them to some degree.

While the primary advantage of ICP-AES is its capability to analyze several elements at a time (either simultaneously or in rapid sequence), the major disadvantage of the technique is the presence of background radiation from other elements and the plasma gases. Although much of the spectral interference can be overcome by the judicious choice of analytical wavelengths and use of background and interelement correction techniques, qualitative identification and quantitation of low levels of analyte in the presence of an interferant are difficult. The complexity of the resultant spectrum requires that the data be reviewed by an experienced analyst.

FAAS determinations are relatively free of the spectral interferences seen in ICP-AES. FAAS is subject to chemical and ionization interferences when proper flame and analytical conditions are not used. With the

exception of refractory elements (e.g., aluminmum, barium), for which ICP-AES has greater sensitivity, this technique has detection limits comparable with ICP-AES.

Although GFAAS is extremely sensitive for most elements, it is generally subject to more severe matrix (chemical) interferences than are the other techniques. Some of these matrix effects may be compensated for by appropriate choice of instrument operating conditions and matrix modification.

CVAAS, a very sensitive technique for mercury determination, utilizes a chemical reduction to selectively convert mercury to its elemental state. The method is subject to chemical interferences from some VOCs, chlorine, and sulfur compounds.

Analytical requests for metals were presented as "metals to ICP detection limits." However mercury analysis was performed by CVAAS and lead analysis was performed by GFAAS if they were specifically requested because lower detection limits could be achieved.

The detection limits required for ICP Metals analysis, as specified by The Environmental Survey Manual, (DOE, 1987) Appendix D, are given in Table 3.5. The detection limits for lead and mercury by atomic absorption techniques are given under CLP Metals in Table 3.5.

The CLP protocol provided the QC necessary to serve as the basis for evaluating the qualitative and quantitative confidence of the metals data. Instrument standardization to within ±10% of true value at midrange was required for all elements except mercury, for which ±20% was allowed. Measurement precision was monitored by use of laboratory duplicate samples. Analytical interferences introduced by the sample matrix or the preparation process were identified through the use of matrix spikes (predigestion), analytical spikes (postdigestion), method blanks, the Method of Standard Additions (MSA), and serial dilutions (ICP only). Spectral interferences in ICP-AES analyses were monitored by use of an interelement interference check standard.

Although the CLP protocol (EPA, 1987d) was developed for use in determining low level inorganics in soil, sediment and water, it was applied to many diverse sample matrices during the course of this program. Because of the many QC samples associated with this protocol, it was still possible to make accurate assessments of data quality. Due to the 6-month total holding time for all elements except mercury, holding time violations were rare and had little impact on the data usability. The total allowed holding time for mercury is 28 days. Because of mercury loss through volatilization and adsorption, holding time violations may have detrimental effects on mercury data quality. Analytes that were detected at levels less than five times the instrumental detection limits, regardless of technique used, should be interpreted with caution because of the possibility that these results may be false positives.

### 3.2.6 Cyanide

Total cyanide was determined using the CLP Inorganics (EPA, 1987d) protocol, or equivalent EPA methods (335.2 or 9010). These methods are applicable for the determination of low levels of cyanide in waters, soils, and sediments. Cyanide, as hydrocyanic acid (HCN), is released by refluxing the sample with strong acid and is distilled into an absorber-scrubber containing sodium hydroxide solution. The cyanide ion in the absorbing solution is then determined colorimetrically.

Samples for cyanide determination were preserved with sodium hydroxide and refrigerated until time of analysis. If present in the sample, oxidizing agents such as chlorine may decompose any cyanides present. Field identification of and treatment for oxidizing agents, as recommended in the protocol, were not carried out.

Chemical species that interfere with the cyanide determination include sulfides, nitrates, and nitrites. Sulfide interferes with the colorimetric procedures, and nitrates and nitrites cause artificially high results. Other interferants include substances that may contribute color or turbidity to the sample and, in most cases, are removed by the

distillation process. There is some evidence to indicate that cyanide complexes of noble metals, (i.e., gold, platinum, and palladium), are not fully recovered by this procedure.

Rigorous QC controls similar to those used for inorganics analysis were used to ensure that data produced were of known quality. These QC samples included matrix spikes, duplicates, blanks, and check standards. The total allowed holding time for cyanide analysis is 14 days from sample collection to distillation. Due to the extreme reactivity of some cyanide species, holding time violations may have detrimental effects on the data quality.

### 3.2.7 Toxicity Characteristic Leaching Procedure

The toxicity characteristic leaching procedure (TCLP), EPA Method 1320, is designed to simulate the leaching a waste will undergo if disposed in a sanitary landfill. The TCLP is suitable for determining the potential mobility of toxic organic compounds and metals at levels of regulatory concern in waste (liquid, solid, and multiphasic). After preparation of the sample leachate, portions of this extract are subjected to analysis for analytes of concern according to the protocols outlined in Sections 3.2.2 to 3.2.4, as appropriate.

TCLP was requested only if contaminant levels observed by SVOA or metals determination were of comparable magnitude to calculated TCLP threshold limits (see Table 4.0.6). In order to determine if TCLP determination was required, a dilution factor was applied to convert the proposed TCLP regulatory limits (mg/L) to comparable units (mg/kg) (i.e., mg/kg for metals, µg/kg for SVOCs). For metals, the regulatory limits in mg/L were adjusted to account for the sample weights and volumes used in the TCLP (multiplied by 2.0 L and divided by 0.1 kg) to give a conversion factor of 20. For SVOCs and pesticides, the conversion factor for the regulatory limits is 20,000 (multiplied by 2.0 L, divided by 0.1 kg, and multiplied by 1000 µg/mg). The comparison of the converted regulatory limits with the metals, SVOCs, and pesticide results

implies the worst case assumption that 100% of the contaminants in the sample would leach during TCLP. TCLP determinations were required if sample concentrations exceeded the converted regulatory limits (TCLP threshold limits).

### 3.2.8 Asbestos Analysis

3.2.8.1 Environmental (Soil) and Bulk Asbestos Analysis. Soil and bulk asbestos samples were analyzed by polarized light microscopy/dispersion staining (PLM/DS), EPA method 600/M4-82-020. Wet soil samples were prepared by drying at room temperature. No other sample preparation was necessary. Estimation of the percent composition was performed by visual examination. The minimum quantifiable amount is approximately 1%. Asbestos in concentrations at or below this amount may be detected, but the concentration cannot be determined with any certainty.

3.2.8.2 Analysis Procedure for Asbestos in Water. The asbestos method used was extracted from a U.S. Environmental Protection Agency document, "Interim Report July 76-December 78," (Anderson and Long, 1980), under a section entitled Interim Method for Determining Asbestos in Water.

The water samples were ultrasonicated in their original containers, shaken well, and a measured aliquot was filtered onto a 0.2-$\mu$m pore size mixed cellulose ester filter, either 47 or 25 mm diameter, depending on available sample size and turbidity. Although the EPA method advises use of a polycarbonate filter, a mixed cellulose ester filter was used, due to frequent problems with asbestos fiber contamination on polycarbonate filters. The mixed cellulose ester filters were prepared by the NIOSH 7402 direct-preparation technique.

Samples containing high levels of organic material were filtered onto a cellulose ester filter (0.2-$\mu$m pore size), dried, and subjected to low-temperature oxygen plasma ashing. The ash and inorganic particles were resuspended in particle-free water and filtered onto a second

0.2-μm filter. The filters were dried in a desiccator, carbon coated in a vacuum evaporator, and prepared for transmission electron microscopy on a Jaffe wick.

The amount of water that can be filtered for concentration on the transmission electron microscopy grid varies widely, and the detection limit is directly related to the filtration volume. Under ideal conditions (very clean drinking water), 500 ml of sample can be filtered through a 47-mm filter. This results in a one-fiber sensitivity level of 0.03 million fibers per liter (MFL), assuming 10 grid squares of 7500 square micrometers area are counted. More commonly, however, a filtration volume of 50 to 100 ml of drinking water, and much less for surface water samples, is found to be optimal. Water sample interferences include iron and manganese particles, iron-metabolizing bacteria, alum, diatoms, algal scales, and other assorted particles. Surface and well water samples are subject to interference from clays and other mineral particulates, as well as various biological interferenes. Water samples must often be prepared more than once to achieve optimal loading.

Statistically, the detection of four fibers or less is considered to be indistinguishable from the calculated detection limit. Although there are presently no EPA standards for asbestos in drinking water, the proposed rules for the National Primary Drinking Water Regulations suggest a recommended maximum contaminant level (RMCL) of 7.1 MFL for fibers greater than 10 μm in length.

### 3.2.9 Radiological Analytical Procedures

Samples were prepared using the following methods:

- Soil and sludge samples were dried and ground.
- Water samples were filtered, solids digested with acid, and the digested solids added back to the filtrate.

3.2.9.1 Americium and Plutonium. Plutonium isotopes were determined in water samples after purification by solvent extraction and anion exchange. The water samples were first preconcentrated by ferric-hydroxide precipitations, and then the plutonium was separated from uranium and thorium by anion-exchange chromatography. The analytes were coprecipitated with CeF, filtered, and counted by alpha spectrometry.

Americium and plutonium isotopes were determined in soil samples by alpha spectrometry after purification by solvent extraction and anion exchange chromatography. The samples were first decomposed by fusion with lithium metaborate. Then the actinides were separated from matrix elements by a barium sulfate precipitation followed by solvent extraction with bis(2-ethylhexyl) phosphoric acid (HDEHP). Final purification was by anion exchange chromatrography. The actinides were mounted for alpha spectrometric counting as fluoride precipitates.

3.2.9.2 Thorium. Thorium-230 was determined in water and soil samples after purification using solvent extraction and selective precipitation. Soil samples were first decomposed using a lithium metaborate fusion, and water samples were preconcentrated using ferric hydroxide precipitation prior to purification. Thorium was then extracted using tri-n-octyl-phosphine oxide (TOPO) in cyclohexane. Final purification was by anion exchange chromatography, and the thorium was mounted for alpha spectrometric counting as a fluoride precipitate.

3.2.9.3 Uranium. Uranium in water samples was measured by inductively coupled plasma mass spectrometry (ICP-MS). The samples were digested using nitric acid, perchloric acid, and hydrofluoric acid. A known amount of $^{235}U$ was added to the sample as an internal standard. Uranium was determined by comparing the $^{238}U/^{235}U$ ratio to a calibration curve.

3.2.9.4 Gamma Spectroscopy. Spectra were collected for each solids sample using a high-purity germanium detector calibrated from 0 to 1.6 MeV. The gamma peaks were resolved from each spectrum using a

computer program that calculated the peak location in keV and measured the count-rate. Each peak was identified with all long half-lived nuclides within 1.5 keV of the peak location. Visual inspection was used to resolve the identity if more than one nuclide was reported for a given peak. The energy calibration was checked daily and all sample sets contain 10% known control samples.

3.2.9.5 Strontium-90. Soil samples to be analyzed for $^{90}Sr$ were treated with hydrofluoric acid (HF), fused with lithium metaborate, and the melt dissolved in diluted acid. Strontium-90 was determined by purifying the strontium, allowing $^{90}Y$ to grow in, purifying the yttrium, and beta counting the $^{90}Y$ with a gas proportional counter. The strontium was purified by precipitating strontium as $SrCO_3$, $Sr(NO_3)_2$, and $SrSO_4$. Yttrium was purified by removing the str as $SrSO_4$ and then extracting the yttrium using HDEHP in cyclohexane. The yttrium was back-extracted in 6 M hydrochloric acid (HCl) and precipitated as yttrium oxalate and then beta counted. Chemical recovery of strontium was determined by adding $^{85}Sr$ as an internal standard and gamma counting the $^{85}Sr$. Chemical recovery of yttrium was determined by adding natural yttrium as an internal standard and then weighing the yttrium oxalate.

3.2.9.6 Radium. Radium-226 was determined in soil samples by gamma-ray spectrometry. The samples were first dried, pulverized, blended, and then allowed to sit for at least 21 days prior to gamma spectrometric counting to permit radon and its daughters to achieve equilibrium with the $^{226}Ra$ parent.

### 3.2.10 Field Radiological Procedures

3.2.10.1 Gamma Spectrometry. Concentrations of the gamma-emitting radionuclides were measured in waste, subsurface soil, surface soil, sediment, and sludge using standard gamma-ray spectrometry methods. These methods allow for the nondestructive determination of low-level concentrations of all gamma-emitting radionuclides present in the samples.

Samples were gamma counted using either of two suitably shielded high-purity germanium detectors, and the resulting spectra were analyzed by a Micro-VAX computer. All gamma-emitting radionuclides present in concentrations above the detection limit were measured. Because the detection limit depends on the natural background seen by the detector and the actual radionuclide content of the sample, minimum count times (equivalent to an 18-h count using a 10% efficiency detector) were used to ensure adequate detection limits. Screening, which is less sensitive than gamma analysis, uses the same method as gamma analysis but shorter (i.e., 2000 second) count times.

Interferences due to natural background seen by the gamma-ray detector were automatically compensated for by the computer program by using actual backgrounds routinely obtained by the detector. Interferences due to multiple radionuclides that have gamma rays of energies indistinguishable by the spectrometer were compensated for by the analysts during final data analysis and interpretation. All results were corrected for radioactive decay to the time the sample was obtained. Whenever possible, multiple gamma rays were used to obtain the concentration of a radionuclide.

3.2.10.2 Gross Alpha and Gross Beta Analyses. The gross concentrations of alpha- and beta-emitting radionuclides were determined in water samples using standard gross alpha and beta techniques. Gross alpha and beta analyses of soil, sediment, vegetation, and tissue were performed in the laboratory.

Gross alpha and gross beta screening were performed on water and soil samples (if requested). Trigger levels were 15 pCi/L alpha and 45 pCi/L beta for water samples. If a sample exhibited a gross alpha or gross beta activity above the trigger level, then the sample was analyzed further to determine the isotopes contributing to the activity of the sample.

Before use, the gross alpha/beta instrument was calibrated for efficiency using NBS-traceable alpha- and beta-emitting standards. In addition, the effects of dissolved solids were determined using suitably prepared standards containing varying amounts of dissolved salts, and interferences due to natural background were removed by routinely measuring the natural background seen by the detector. Because these are gross measurements in which the specific radionuclide mixture was not determined, no attempt to correct for radioactive decay was made.

# 4. DATA PRESENTATION AND READERS GUIDE

This section presents data collected as part of the Environmental Survey of LANL and a readers guide to explain the format and content of data tables, data qualifiers, and criteria for data reporting. Findings generated by the Survey Teams have been divided into discrete units called Environmental Problems, starting with Section 4.1 for each site.

Experienced readers may find it acceptable to proceed to the data presentation by environmental problem. Uninitiated readers will find the readers guide essential to understanding the data presentation. All readers will be aided by the quick reference guide, which can be found inside the back cover of this document. The quick reference guide can be removed from its pocket and used as a reference to acronyms and data qualifiers as each problem is examined. An overview of the format used to present each environmental problem follows.

Information and data related to a specific environmental problem are presented sequentially for each site. Initially, sample request numbers and the name of the Survey Team member(s) who requested the sample collection and analysis are presented. The rationale for examining a certain location(s) is given in the Finding and Basis section. The Sampling and Analysis Objectives section defines the S&A objective for that environmental problem. The Sampling and Analysis Design section describes the sampling design, methods, analytes of interest for each sample, and changes from design and methods specified in the S&A Plans. The Field and Analytical Data section is then presented in text and tabular form followed by statements of data quality levels, limitations, and qualifications. Italicized text indicates summary information, including a synopsis of the S&A data. However, data interpretation or comparison to background levels and regulatory limits is beyond the scope of this document, and therefore, not provided.

Assessments of data quality levels for the field sampling design, sampling procedures, documentation, and analytical data are made in the presentation of each environmental problem. Data quality levels for these four areas are assigned to each environmental problem as a whole. The assessments are based on three data quality levels that were developed as part of the DOE Environmental Survey. The three levels, designated as Quality Levels I, II, and III, are in descending order regarding their usefulness in making either quantitative or qualitative decisions regarding an environmental problem.

Field sampling designs for the survey are generally Quality Level II because they involve a limited number of samples at a given location; however, if sampling procedures or approved alternatives were adhered to during actual field sampling, then a Data Quality Level I would be assigned to that activity. The documentation data quality level is designated Quality Level I if all specified logbook, shipping, labeling, and chain-of-custody (COC) procedures were followed. Analytical data quality levels are generally Quality Level I unless the majority of the data produced were compromised (as indicated by associated QC data) to such an extent as to limit its applicability in meeting S&A objectives. Data Quality Level II was assigned to analytical data for environmental problems in which the majority of the QC data indicated adverse impact on the data quality. Because of the generally broad S&A goals, no analytical data was assigned Quality Level III. The analytical data quality level refers to nonradiological analytical data (referred to as "Analytical Data" in Section 4 discussions) and to radiological analytical data (referenced as "Radiological Data" in Section 4 discussions). The three levels are discussed in detail in Appendix A of The Environmental Survey Manual (DOE, 1987).

The data tables presentation includes summary tables of sample results by analysis type. Content of the tables is explained in Section 4.0.1. More detailed information affecting data quality and interpretation is

included in the appendices of this document. Appendix A contains an updated listing of S&A requests for the sites. Background concentrations of chemical constituents in environmental media are included in Appendix B. Results of field, analytical chemistry, documentation, and data management audits are contained in Appendix C. A complete listing of radiological data and associated QC data is provided in Appendix D. Appendix E serves a dual purpose of QC data presentation as well as complete data listing for nonradiological analytical data. Appendix F is the complete data report from the geophysical surveys performed as part of the S&A program at LANL.

### 4.0.1 Data Tables

For each environmental problem presentation, four different types of tables may be included: completeness tables, field data tables, analytical (nonradiological) data tables, and radiological data tables. The format and contents of these tables is presented in this section, along with definitions of associated data qualifier flags and reporting criteria.

#### 4.0.1.1 Completion Tables

A completion table with the same format as Table 4.0.1 is included in each environmental problem presentation. These completion tables list all the sample requests made for the respective environmental problem, including requests added after the S&A Plan was approved and requests deleted in the field. The table entries are ordered by request number and include the sample number (SN) suffix, status, date of collection, area, sampling location within that area, type of location, environmental medium sampled, and sample types for each request number. Also included are the number of samples planned, and the number actually collected and analyzed per analytical request.

To facilitate readability, blank spaces have been used in the completion tables whenever planned, collected, and analyzed values are all zero for a given request number and analyte. Blanks are also used instead of zeros for sampling requests that were deleted from the original

## TABLE 4.0.1. A TYPICAL COMPLETION TABLE

(Column Header Legend: P = Planned C = Collected A = Analyzed)
(Status Column Symbols: D = Deleted)

| REQUEST NUMBER | SN | STAT | DATE COLLECTED | AREA | LOCATION | TYPE LOCATION | MEDIA | TYPE | NUMBER SAMPLES | | VOLATILE | | | SEMI VOLATILE | | | ICP METALS | | | GROSS A&B | | | GAMMA ANALYSIS | | |
|---|---|---|---|---|---|---|---|---|---|---|---|---|---|---|---|---|---|---|---|---|---|---|---|---|---|
| | | | | | | | | | P | C | P | C | A | P | C | A | P | C | A | P | C | A | P | C | A |
| SR523 | 01 | | 09/30/87 | P | P-13/BRP | STEEL CR | WATER | GRAB | 1 | 1 | 1 | 1 | 1 | 1 | 1 | 1 | 1 | 1 | 1 | | | | | | |
| SR523 | 02 | | 09/30/87 | P | P-13/BRP | STEEL CR | WATER | GRAB | 1 | 1 | 1 | 1 | 1 | 1 | 1 | 1 | 1 | 1 | 1 | | | | | | |
| SR523 | 03 | | 09/30/87 | P | P-13/BRP | STEEL CR | WATER | GRAB | 1 | 1 | 1 | 1 | 1 | 1 | 1 | 1 | 1 | 1 | 1 | | | | | | |
| SR523 | 04 | | 09/30/87 | P | P-13/BRP | STEEL CR | WATER | GRAB | 1 | 1 | 1 | 1 | 1 | 1 | 1 | 1 | 1 | 1 | 1 | | | | | | |
| SR523 | 05 | | 11/03/87 | P | P-13/BRP | STEEL CR | WATER | GRAB | 1 | 1 | 1 | 1 | 1 | 1 | 1 | 1 | 1 | 1 | 1 | 0 | 1 | 1 | | | |
| SR523 | 06 | | 11/03/87 | P | P-13/BRP | STEEL CR | WATER | GRAB | 1 | 1 | 1 | 1 | 1 | 1 | 1 | 1 | 1 | 1 | 1 | 0 | 1 | 1 | | | |
| SR523 | 07 | | 11/03/87 | P | P-13/BRP | STEEL CR | WATER | GRAB | 1 | 1 | 1 | 1 | 1 | 1 | 1 | 1 | 1 | 1 | 1 | 0 | 1 | 1 | | | |
| SR523 | 08 | | 11/03/87 | P | P-13/BRP | STEEL CR | WATER | GRAB | 1 | 1 | 1 | 1 | 1 | 1 | 1 | 1 | 1 | 1 | 1 | 0 | 1 | 1 | | | |
| SR523 | 09 | | 11/04/87 | P | P-13/BRP | STEEL CR | WATER | GRAB | 1 | 1 | 1 | 1 | 1 | 1 | 1 | 1 | 1 | 1 | 1 | | | | | | |
| SR523 | 10 | | 11/04/87 | P | P-13/BRP | STEEL CR | WATER | GRAB | 1 | 1 | 1 | 1 | 1 | 1 | 1 | 1 | 1 | 1 | 1 | | | | | | |
| SR523 | 11 | | 11/04/87 | P | P-13/BRP | STEEL CR | WATER | GRAB | 1 | 1 | 1 | 1 | 1 | 1 | 1 | 1 | 1 | 1 | 1 | | | | | | |
| SR523 | 12 | | 11/04/87 | P | P-13/BRP | STEEL CR | WATER | GRAB | 1 | 1 | 1 | 1 | 1 | 1 | 1 | 1 | 1 | 1 | 1 | | | | | | |
| SR524 | 01 | | 09/29/87 | P | P-13/BRP | EFF/SEEP | SOIL/SED | S.COMP | 1 | 1 | 1 | 1 | 1 | 1 | 1 | 1 | 1 | 1 | 1 | 1 | 1 | 0 | 0 | 1 | 1 |
| SR524 | 02 | | 09/29/87 | P | P-13/BRP | EFF/SEEP | SOIL/SED | S.COMP | 1 | 1 | 1 | 1 | 1 | 1 | 1 | 1 | 1 | 1 | 1 | 1 | 1 | 0 | 0 | 1 | 1 |
| SR524 | 03 | | 09/29/87 | P | P-13/BRP | EFF/SEEP | SOIL/SED | S.COMP | 1 | 1 | 1 | 1 | 1 | 1 | 1 | 1 | 1 | 1 | 1 | 1 | 1 | 0 | 0 | 1 | 1 |
| SR524 | 04 | | 10/06/87 | P | P-13/BRP | EFF/SEEP | SOIL/SED | S.COMP | 1 | 1 | 1 | 1 | 1 | 1 | 1 | 1 | 1 | 1 | 1 | 1 | 1 | 1 | 0 | 1 | 1 |
| SR524 | 05 | | 10/06/87 | P | P-13/BRP | EFF/SEEP | SOIL/SED | S.COMP | 1 | 1 | 1 | 1 | 1 | 1 | 1 | 1 | 1 | 1 | 1 | 1 | 1 | 1 | 0 | 1 | 1 |
| SR524 | 06 | | 10/06/87 | P | P-13/BRP | EFF/SEEP | SOIL/SED | S.COMP | 1 | 1 | 1 | 1 | 1 | 1 | 1 | 1 | 1 | 1 | 1 | 1 | 1 | 1 | 0 | 1 | 1 |
| SR524 | 07 | | 10/06/87 | P | P-13/BRP | EFF/SEEP | SOIL/SED | S.COMP | 1 | 1 | 1 | 1 | 1 | 1 | 1 | 1 | 1 | 1 | 1 | 1 | 1 | 1 | 0 | 1 | 1 |
| SR534 | 01 | D | | P | P-13/BRP | SEEP | WATER | GRAB | 3 | | 3 | | | 3 | | | 3 | | | 3 | | | | | |
| SR534 | 02 | D | | P | P-13/BRP | SEEP | WATER | GRAB | 3 | | 3 | | | 3 | | | 3 | | | 3 | | | | | |
| SR534 | 03 | D | | P | P-13/BRP | SEEP | WATER | GRAB | 3 | | 3 | | | 3 | | | 3 | | | 3 | | | | | |
| SR534 | 04 | D | | P | P-13/BRP | SEEP | WATER | GRAB | 3 | | 3 | | | | | | | | | | | | | | |
| SR535 | 01 | | 11/04/87 | P | P-13/BRP | E WELL | WATER | GRAB | 1 | 1 | 1 | 1 | 1 | 1 | 1 | 1 | 1 | 1 | 1 | 1 | 1 | 1 | 1 | 1 | 1 |
| Totals for Problem Number 10 | | | | | | | | | 32 | 20 | 32 | 20 | 20 | 29 | 20 | 20 | 29 | 20 | 20 | 17 | 12 | 9 | 1 | 8 | 8 |

S&A Plan. Zero values are used in all other cases. These completion tables summarize sampling and analytical activities.

4.0.1.2 Field Data Tables

Applicable field data are routinely included in the analytical data tables (see Section 4.0.1.3). Conductivity, pH, and temperature data for aqueous samples, and collection depths for solid samples are reported in this manner. When other field measurements were made, separate field data tables were included as needed.

4.0.1.3 Analytical Data Tables

Table 4.0.2 is an example of the analytical (i.e., nonradiological) data presentation for an environmental problem. A separate table is provided for each requested analyses type. The basic format of these tables is consistent between problems and analysis type. Header information in all analytical result tables includes the area, location and location type for each sample, sample number, environmental medium, units of measurement, and the sample delivery group (SDG) number (analytical batch designator). Field measurement data are included in result tables for all analysis types to facilitate data interpretation.

Analytical data tables are presented in the following order for each environmental problem: (a) volatile organic compounds, (b) semivolatile organic compounds, (c) pesticide/PCBs, (d) inorganic analytes, and (e) classical analytes.

Sample delivery group (SDG) is a term developed in the EPA CLP Program. The SDG number is used to uniquely identify an analytical batch of samples within a given type of analysis. This batch identification is important because the QC data qualifiers appearing in data table are specific to an SDG (analytical batch) and not necessarily to a particular environmental problem. The SDG number provides the link between the concentration data in section 4 , analytical data tables, and the applicable QC data in Appendix E.

## TABLE 4.0.2. EXAMPLE OF A DATA PRESENTATION TABLE



| AREA | P | P | P | P | P | P | P | P |
|---|---|---|---|---|---|---|---|---|
| LOCATION | P-13/BRP | P-13/BRP | P-13/BRP | P-13/BRP | P-13/BRP | P-13/BRP | P-13/BRP | P-13/BRP |
| TYPE OF LOCATION | E WELL | EFF/SEEP | EFF/SEEP | EFF/SEEP | EFF/SEEP | EFF/SEEP | EFF/SEEP | EFF/SEEP |
| SAMPLE NUMBER | SR53501XD | SR52401XV | SR52402XV | SR52403XV | SR52404XV | SR52405XV | SR52406XV | SR52407XV |
| MEDIA | G_WATER | SOIL/SED | SOIL/SED | SOIL/SED | SOIL/SED | SOIL/SED | SOIL/SED | SOIL/SED |
| UNITS | ug/L | ug/kg | ug/kg | ug/kg | ug/kg | ug/kg | ug/kg | ug/kg |
| SDG NUMBER | SR10002XD | SR10401XV | SR10401XV | SR10401XV | SR10401XV | SR10401XV | SR10401XV | SR10401XV |
| **FIELD MEASUREMENTS** | | | | | | | | |
| pH | 4.6 | | | | | | | |
| Conductivity (uS) | 43 | | | | | | | |
| Temperature (C) | 22.8 | | | | | | | |
| Depth (ft) | | 0-0.25 | 0-0.25 | 0-0.25 | 0-0.5 | 0-0.5 | 0-0.5 | 0-0.5 |
| **TARGET COMPOUNDS** | | | | | | | | |
| Benzoic acid | --- | --- | 2300 J | 1100 J | --- | --- | --- | --- |
| Acenaphthene | --- | --- | --- | --- | --- | --- | --- | 65 J |
| Dibenzofuran | --- | --- | --- | --- | --- | --- | --- | 30 J |
| Fluorene | --- | --- | --- | --- | --- | --- | --- | 69 J |
| Phenanthrene | --- | --- | --- | 100 J | --- | 34 J | --- | 770 J |
| Anthracene | --- | --- | --- | --- | --- | --- | --- | 150 J |
| Fluoranthene | --- | --- | --- | 180 J | --- | 68 J | --- | 1200 |
| Pyrene | --- | --- | --- | 140 J | 25 J | 45 J | 23 J | 870 J |
| Benzo(a)anthracene | --- | --- | --- | 110 J | --- | --- | --- | 550 J |
| Chrysene | --- | --- | --- | 110 J | --- | --- | --- | 580 J |
| Benzo(b)fluoranthene | --- | --- | --- | 100 J | --- | 28 J | --- | 750 J |
| Benzo(k)fluoranthene | --- | --- | --- | 76 J | --- | --- | --- | --- |
| Benzo(a)pyrene | --- | --- | --- | 64 J | --- | --- | --- | 410 J |
| Indeno(1,2,3-cd)pyrene | --- | --- | --- | --- | --- | --- | --- | 190 J |
| **TENTATIVELY IDENTIFIED COMPOUNDS** | | | | | | | | |
| Phenanthrene Carboxylic Acid | --- | 230 J | --- | --- | --- | --- | --- | --- |
| Brominated Compound MW=176 | --- | --- | 160 J | --- | --- | --- | --- | --- |
| Poss Diphenyl-Propanedione | --- | --- | 100 J | --- | --- | --- | --- | --- |
| PhenanthreneCarboxylicAcid C-2 | --- | --- | --- | --- | 2300 J | --- | --- | --- |
| Molecular Sulfur | --- | --- | --- | --- | 1200 J | 390 J | 530 J | 500 J |
| C-18 Phenanthrene | --- | --- | --- | --- | --- | 280 J | --- | --- |
| 11H-Benzo(b)Fluorene | --- | --- | --- | --- | --- | --- | --- | 150 J |
| C18H10 Polyaromatic | --- | --- | --- | --- | --- | --- | --- | 120 J |
| C20H12 Polyaromatic | --- | --- | --- | --- | --- | --- | --- | 870 J |
| C20H12 Polyaromatic | --- | --- | --- | --- | --- | --- | --- | 1200 J |
| T[illegible] (Allowed) Hold Time | 11(7)d* | 16(14)d* | 16(14)d* | 16(14)d* | 9(14)d | 9(14)d | 9(14)d | 9(14)d |
| [illegible]ed/DECReased CRQL | [illegible]000 | ELEV | EL[illegible] | ELEV | ELEV | ELEV | ELEV | ELEV |
| | | | 0.9[illegible] | [illegible].950 | [illegible]0 | 0.[illegible] | [illegible].950 | [illegible]0 |

The QC data presented in Appendix E of this report are ordered by ascending SDG number within analysis type. For convenience to the reader, directories are provided for the QC data tables in Appendix E for volatile and SVOCs , pesticides/PCBs (P/P), and inorganics (metals). Each directory includes an ordered listing of sample numbers grouped by environmental problem, each sample number's corresponding SDG number (QC table), and the page on which the QC table is located. An abbreviated directory table is provided for "Classical/Exotic" analysis types. The low volume of data for these analyses did not warrant inclusion of a more detailed directory. The directory identifies the page on which the presentation of QC data for each analysis type begins.

Total holding times (actual and allowed) are presented in all analytical results tables. Total holding time represents the lapsed time between collection of samples and sample preparation or analysis, and includes field/shipping time and analytical holding time. Total holding time entries are in the form "x(y)", where x is the actual total holding time and y is the allowed total holding time. Violations of the allowed total holding time are flagged with an asterisk. Applicable total holding times are provided in Table 4.0.3. Total holding times are adopted from regulatory requirements (EPA, 1986; CFR, 1987).

Although the basic format of the analytical data tables is consistent between analysis types, data qualifier flags, and inclusion/exclusion criteria may be different. These differences are discussed in the following paragraphs.

(1) Organic (VOA, SVOA, and Pesticide/PCB) Data Tables--Only those target compounds present at detectable concentrations in at least one sample for the environmental problem are included in the results tables for organic analysis types. The analytes found are listed under the "target compound"

TABLE 4.0.3 ALLOWED ANALYTICAL AND TOTAL HOLDING TIMES

| Analysis Type | Holding Time Calculated To: | Allowed Total Holding Time |
|---|---|---|
| ORGANICS | | |
| VOA | Sample analysis | 14 days |
| SVOA | Sample extraction | 7 days water<br>14 days soil |
| P/P | Sample extraction | 7 days water<br>14 days soil |
| HE | Sample extraction | 14 days (recommended) |
| INORGANICS | | |
| Metals | Sample preparation | 6 months |
| Mercury analysis | Sample preparation | 28 days |
| Asbestos | NA | NA |
| Cyanide | | |

heading. If no target compound list (TCL) compounds were detected in any of the samples for an environmental problem, "none detected" appears under the heading.

Inclusion criteria for tentatively identified compounds (TICs) for VOA and SVOA are somewhat subjective. Halogenated hydrocarbons and polyaromatic hydrocarbons (PAHs) are generally included in the results tables under the "tentatively identified compounds" heading. Inclusion of other TICs is dependent on the S&A objectives for a given environmental problem.

Detectable concentrations are reported in the data tables as values accompanied when appropriate by data qualifier flags. Less than detectable values are reported as "---".

Data are not reported when an analyte has been conclusively and totally attributed to external contamination. For example, detection of acetone in a laboratory method blank, at levels comparable to those found in associated field samples, indicates that the acetone should be attributed to a laboratory contamination problem. As a result, the value would not be included in the Section 4 data table. (The complete data set, including QC data, is found in Appendix E.) The types of contamination that conceivably could occur include travel blank cross contamination, equipment contamination, method blank contamination, preparation blank contamination, and reagent contamination. Investigation of these possible sources of contamination is an integral part of the data quality assessment process conducted by the analytical chemist. Analyte values excluded for any of the above reasons are reported as "---" in Section 4 results tables.

Exceptions to the above exclusion rule can occur when the analyst determines that additional data warrant being reported. There are instances in which a specific analyte is detected in a blank (e.g., method blank) and in field samples, yet the relative magnitude of the levels makes it impossible to totally attribute analyte presence to contamination. In this case, the appropriately flagged data are included in data summary tables,

and an assessment of the impact on data quality is provided in the accompanying text. For example, if acetone is detected in a method blank at 20 μg/L, and in a field sample at 350 μg/L, the value of 350 μg/L, flagged with a "B" (indicating method blank contamination), would be provided in the data table. In addition, the data quality assessment would provide an explanation of the fact that in spite of acetone being detected in the method blank, it is likely that the levels detected in field samples are representative of the actual field samples.

The limit (CRQL) row is used to flag samples for which the CRQL is elevated or decreased due to sample moisture content, dilution of the sample, and/or sample weight used for analysis. Elevated detection limits are identified by an entry of "ELEV" in this row and decreased detection limit by "DECR." The "dilution factor" row provides sample-specific information on dilutions introduced during analysis.

In the data tables, organic analysis analyte concentrations are reported in micrograms per liter (μg/L) or micrograms per kilogram (μg/kg) dry weight for liquid and solid or multiphasic samples, respectively.

Several data flags are used to qualify the results from organic analysis. The qualifiers are as follows:

J - Indicates an estimated value. This flag is used either when estimating a concentration for tentatively identified compounds (an assumed relative retention factor (RRF) rather than an actual one is used), or when the mass spectral data indicate the presence of a compound that meets the identification criteria but the result is less than the sample quantitation limit (CRQL). For example, if the sample quantitation limit is 10 μg/L, but a concentration of 3 μg/L is calculated, it is reported as 3 J. The sample quantitation limit is adjusted for both dilution and percent moisture.

B - This flag is used when the analyte is found in the associated analytical blank as well as in the sample. It indicates possible/probable blank contamination and warns the data user that high bias is possible. This flag is used for a TIC as well as for a positively identified TCL compound.

E - This flag identifies compounds whose concentrations exceed the calibration range of the instrument for that specific analysis and warns the user that low bias is possible.

D - This flag identifies all compounds identified in an analysis at a secondary dilution factor. If a sample or extract is reanalyzed at a higher dilution factor, as in the "E" flag above, the "DL" suffix is appended to the result for the diluted sample, and all concentration values reported for this analysis are flagged with the "D" flag.

(2) Inorganic (Metals) Data Tables--Elements for which regulatory standards exist (Priority Pollutant and/or EP Toxic elements) are always reported. Those elements are

| | |
|---|---|
| Antimony | Lead |
| Arsenic | Mercury (if determined) |
| Barium | Nickel |
| Beryllium | Selenium |
| Cadmium | Silver |
| Chromium | Thallium |
| Copper | Zinc. |

Additional analytes are reported in the results tables if they are of specific interest for an environmental problem (i.e., are cited in "Finding and Basis" or "Supporting Information" sections). Data for other elements are included in Appendix E.

Analyte concentrations in preparation blanks and calibration verification blanks up to the CRDLs or DOE method detection limit (MDLs) are allowable under protocol. Sample concentrations less than or equal to

concentrations observed in the associated blanks are not included in the inorganics data tables. When sample results exceed the blank results, analyte values remain in the Section 4 result tables, and an assessment of data quality impact (high bias) is provided in the accompanying text. Note that the "B" qualifier flag has a different meaning in the inorganic tables, and does not, by itself, indicate blank contamination.

Analyte concentrations found in the samples at levels less than three times their respective instrument detection limit (IDLs) are not included in the Section 4 data tables. Structured background, low signal-to-noise levels, external contamination, and spectral interferences (for ICP-AES) may introduce high qualitative and quantitative uncertainty to results in this concentration range. Analyte values found in this range are excluded from the Section 4 result tables to ensure possible false positives are not reported. These low-level analytes are included in Appendix E QC tables for reference, as necessary, but these data must be interpreted with caution.

All analytes either not detected or excluded due to the above reasons are reported as "---" in the Section 4 result tables. Analytes for which analysis was not requested are indicated with "NR".

Inorganic analysis data tables have concentrations reported in milligrams per kilogram (mg/kg) for solid or multiphasic samples and micrograms per liter (μg/L) for aqueous samples.

The only qualifier flag used in the inorganic result tables is the "B" qualifier, which indicates the reported value is less than the CRDL or DOE MDL, but greater than the IDL. Equivalent concentrations are allowable in method blanks, so data flagged with a "B" must be interpreted with caution.

(3) Other Data Tables Some of the samples collected for the LANL Survey were analyzed for high explosives, cyanide, and asbestos.

Data qualifiers for the high explosives data are the same as those used for the organic analysis. The nondetected values are reported as "---". However, these are the instrument detection limits were used rather than the quantitation limits as they are for the other organic data. Therefore, there are no "J" qualifiers associated with these data.

The data flags used for the cyanide data are the same as those used for metals. There are no data flags associated with the asbestos data.

4.0.1.4 Radiological Data Tables

For some environmental problems, radiological analyses of samples were performed. Data from radiological analyses are presented in separate tables (see Table 4.0.4) for applicable environmental problems. The structure of the tables is similar to those for analytical chemistry data.

One difference between radiological and nonradiological data tables is that each reported radiological concentration is accompanied by a two sigma (two standard deviations) value instead of by data qualifier flags. The radiological data presented in Table 4.0.4 were produced using either a proportional alpha/beta counter, a beta liquid-scintillation spectrometer, an alpha spectrometer, or a gamma-ray spectrometer. The analyst computes a best estimate of the standard deviation for the determined result and uses that value to "qualify" the result of the measurement. The standard deviations can vary in magnitude significantly and, therefore, are necessary for making meaningful interpretations of the data.

When a particular radionuclide is included in the table and no measurement was made for it, then an entry of "NA" (not applicable or not available) is made. An entry of "---" or a "<" is made when a radionuclide was analyzed but not detected.

## TABLE 4.0.4. EXAMPLE OF A RADIOLOGICAL DATA TABLE



| AREA | 600 | 600 | 600 | 600 | 600 |
|---|---|---|---|---|---|
| LOCATION | P-17-D | P-17-C | P-17-B | P-17-A | P-17-1D |
| TYPE OF LOCATION | E WELL | E WELL | E WELL | E WELL | E WELL |
| SAMPLE NUMBER | SR60001W | SR60101W | SR60201W | SR60301W | SR60401W |
| MEDIA | G_WATER | G_WATER | G_WATER | G_WATER | G_WATER |
| UNITS | pCi/L | pCi/L | pCi/L | pCi/L | pCi/L |
| Gross Alpha | 3.5 ±3.7 | ---- | 3.0 ±3.0 | ---- | 0.40 ±1.8 |
| Gross Beta | 21.0 ±10.0 | 12.0 ±7.0 | 7.0 ±7.0 | 3.0 ±6.0 | 2.0 ±6.0 |
| Alpha Emitters | | | | | |
| Thorium - 232 | ---- | ---- | ---- | ---- | ---- |
| Uranium - 238[a] | <910 ±400 | <3300 ±400 | <1500 ±600 | <1600 ±1200 | ---- |
| Uranium - 238[b] | ---- | ---- | ---- | ---- | ---- |
| Uranium (all isotopes)[c] | <1.0 | na | na | na | na |
| Plutonium - 238 | 2.2 ±0.20 | na | na | na | na |
| Plutonium - 239,240 | 2.2 ±0.30 | na | na | na | na |
| Beta Emitters | | | | | |
| Tritium | <700 | <700 | <700 | <700 | <700 |
| Strontium - 90 | na | na | na | na | na |
| Technetium - 99 | <4.0 | <4.0 | <4.0 | <4.0 | <4.0 |
| Gamma Emitters | | | | | |
| Potassium - 40 | <250 | ---- | ---- | ---- | ---- |
| Cobalt - 56 | ---- | ---- | ---- | ---- | ---- |
| Cobalt - 60 | <25.0 | ---- | ---- | ---- | ---- |
| Iodine - 129 | 0.69 ±0.96 | 1.1 ±14.0 | -0.11 ±0.96 | -0.88 ±1.2 | 0.54 ±0.90 |
| Cesium - 137 | ---- | ---- | ---- | ---- | ---- |
| Cerium - 141 | ---- | ---- | ---- | ---- | ---- |

a. Total unbroken chain activity in equilibrium.
b. Activity in excess of U238 natural chain.
c. Units are ug/L.

In some gamma-ray spectral measurements when the natural activities of uranium or thorium were detected, the concentration was conservatively quantified based on the assumption that all isotopes associated with the $^{238}U$ chain or the $^{232}Th$ chain were present and in equilibrium. The values given are concentrations for the total radioactive chain. Equilibrium and an unbroken chain were assumed because only the daughters were seen, and these daughters were then used to determine the concentration of the $^{238}U$ and $^{232}Th$ parents. This is denoted in the table by an asterisk and a "<" in front of the value. Because these values are not normal "less thans" (lower limits of detection), uncertainties are also given. For samples in which the natural chains can be expected to be in equilibrium (e.g., soil samples), the values presented in the table can be expected to accurately represent the actual total radioactive chain concentration. For water samples, however, where the members of the natural chain may not be in equilibrium, the values given in the table are indeed upper limits that may be much higher than the actual concentrations and may not be indicative of the amount of activity in the water sample.

In some samples, quantities of $^{238}U$ in excess of that which is in equilibrium with the daughters in the latter part of the radioactive chain has been detected. This excess $^{238}U$ is not naturally occurring (i.e., it cannot be accounted for by the naturally occurring radioactive chain) and, therefore, must have been added by man. Results for this excess $^{238}U$ are indicated by a note "a" in the table.

Gamma analyses were performed on some of the soil samples both in the field via the IMRL (i.e., as received) and in the laboratory after drying. The IMRL results are reported as pCi/kgW and the laboratory results as pCi/kgD. Differences in the results from the two measurements can be expected because of the water content. In addition, for the natural $^{232}Th$ and $^{238}U$ chain radionuclides, the results in the tables represent the measurement of different quantities. For the laboratory measurements (reported as pCi/kgD), the concentrations of individual radionuclides are

given. For the field measurements (reported as pCi/kgW), the total chain concentrations are reported assuming that all members of the chain are in equilibrium. A direct comparison of the $^{232}Th$ or $^{238}U$ results for a given sample, therefore, may not be meaningful.

The QC data relevant to each sample appear in Appendix D. With each radiological QC table in Appendix D, a directory (based on sample request numbers rather than SDG) is provided for easily locating the data for a given sample.

### 4.0.2 Regulatory Limits

Table 4.0.5 contains standards and regulatory limits from the National Primary and Secondary Drinking Water Standards. They are included only to provide a basis for comparison.

For solid samples of waste, soil, sediment, and sludge, the standards presented in Table 4.0.5 are from the Resource Conservation and Recovery Act (RCRA) definition of a hazardous waste as given in 40 CFR 261.24, "Characteristics of EP Toxicity." Aqueous wastes or solid wastes that have been extracted using the procedures prescribed therein and exceed the given limits are defined as hazardous wastes.

For the Environmental Surveys, the analytical protocol required standard CLP analytical procedures for SVOCs, pesticides, and inorganics. The TCLP test was required only if levels of contamination detected were of comparable magnitude to TCLP regulatory limits. Proposed TCLP regulatory limits and Comparison values (see Section 3.2.7) are presented in Table 4.0.6 to allow direct comparison of the data.

### 4.0.3 Background Levels

A table of trace elements found in natural soils (Table 4.0.7) is provided to aid the reader in a general evaluation and interpretation of the soils data. Localized background information obtained from previous studies at the sites is provided in Appendix B.

TABLE 4.0.5. REGULATORY LIMITS AND GUIDELINES FOR ENVIRONMENTAL CONTAMINANTS

| | EPA Drinking Water Standards[a] | RCRA EP Toxicity Limits[b] | |
|---|---|---|---|
| MCL Inorganic Chemicals | (mg/L) | (mg/L) | (mg/kg)[c] |
| Arsenic | 0.05 | 5 | 100 |
| Barium | 1 | 100 | 2000 |
| Cadmium | 0.01 | 1 | 20 |
| Chromium | 0.05 | 5 | 100 |
| Fluoride | 4 | -- | -- |
| Lead | 0.05 | 5 | 100 |
| Mercury | 0.002 | 0.2 | 4 |
| Nitrate (as N) | 10.[d] | -- | -- |
| Selenium | 0.01 | 1 | 20 |
| Silver | 0.05 | 5 | 100 |
| MCL Organic Chemicals | (µg/L) | (µg/L) | (µg/kg) |
| Chlorinated Hydrocarbons | | | |
| Endrin | 0.2 | 20 | 400 |
| Lindane | 4 | 400 | 8,000 |
| Methoxychlor | 100 | 10000 | 200000 |
| Toxaphene | 5 | 500 | 10000 |
| Chlorophenoxys | | | |
| 2,4-D | 100 | 10000 | 200000 |
| 2,4,5-TP Silvex | 10 | 1000 | 20000 |
| MCL VOCs | (µg/L) | | |
| Benzene | 5 | -- | -- |
| Vinyl chloride | 2 | -- | -- |
| Carbon tetrachloride | 5 | -- | -- |
| 1-2 Dichloroethane | 5 | -- | -- |
| Trichloroethylene | 5 | -- | -- |
| p-Dichlorobenzene | 75 | -- | -- |
| 1,1-Dichloroethylene | 7 | -- | -- |
| 1,1,1-Trichloroethane | 200 | -- | -- |
| Secondary MCL | (mg/L) | | |
| Chloride | 250 | -- | -- |
| Copper | 1 | -- | -- |
| Fluoride | 2 | -- | -- |
| Manganese | 0.06 | -- | -- |
| pH | 6.5 - 8.5 pH units | -- | -- |
| Sulfide | 250 | -- | -- |
| Zinc | 5 | -- | -- |

TABLE 4.0.5. (continued)

| EPA Drinking Water Standards[e] | |
|---|---|
| Contaminant | Limit |
| Radiological | |
| Gross alpha (excluding uranium) | 15 pCi/L |
| Combined $^{226}Ra$ and $^{228}Ra$ | 5 pCi/L |
| $^{226}Ra$ | |
| Gross beta and gamma radioactivity from manmade radionuclides | Annual average concentration shall not produce an annual dose from manm radionuclides equivalent to the tota body or any internal organ dose great than 4 mrem/year. If two or more radionuclides are present, the sum o their annual dose equivalent shall no exceed 4 mrem.<br><br>Compliance may be assumed if annual average concentrations for gross bet activity, tritium, and $^{90}Sr$ are less than 50 pCi/L, 20000 pCi/L, and 8 pCi/L, respectively. It should be noted that these "screening level conservatively calculated and not directly equivalent to an annual dose of 4 mrem. |

TABLE 4.0.5. (continued)

Proposed Derived Concentration Guides[f]

| Radionuclide | pCi/L |
|---|---|
| Antimony-125 | 60,000 |
| Cerium-144 | 7000 |
| Cesium-137 | 3000 |
| Chromium-51 | 1,000,000 |
| Cobalt-60 | 5000 |
| Iodine-129 | 500 |
| Iodine-131 | 3000 |
| Manganese-54 | 50,000 |
| Plutonium-238 | 400 |
| Plutonium-239,240 | 300 |
| Ruthenium-103 | 50,000 |
| Ruthenium-106 | 6000 |
| Strontium-89 | 20,000 |
| Strontium-90 | 1000 |
| Technetium-99 | 100,000 |
| Tritium | 2,000,000 |
| Uranium-234 | 500 |
| Uranium-235 | 600 |
| Uranium-238 | 600 |
| Zirconium-65 | 9000 |

a. National Drinking Water Standards, U.S. EPA 40 CFR 141 (Primary Standards) and 40 CFR 143 (Secondary Standards).

b. Extraction procedure for defining a hazardous solid waste. These values are not directly comparable to metals or pesticide concentrations obtained using the CLP protocols.

c. Comparison values used to determine if analytical results for solid samples exceed EP Toxic limits. Values are based on a dilution factor adjustment because analytical procedure involves extraction.

d. The MCL for nitrate is applicable to both community and non-community water systems.

e. Radiological Drinking Water Standards: U.S. Environmental Protection Agency, National Interim Primary Drinking Water Regulations (CFR 1986). Rations of radionuclides in water that could be continuously consumed and not exceed an effective dose equivalent of 100 mrem/year.

f. Concentration of radionuclides in water that could be continuously consumed and not exceed an effective dose equivalent of 100 mrem/year.

TABLE 4.0.6. PROPOSED TOXICITY CHARACTERISTIC LEACHING PROCEDURE (TCLP) CONTAMINANTS, REGULATORY LIMITS, AND THRESHOLD LIMITS

| | | Regulatory Limit[a] | | |
|---|---|---|---|---|
| | | | Calculated Threshold Limit[b] | |
| Contaminant | CAS No. | mg/L | µg/kg | mg/kg |
| Acrylonitrite | 107-13-1 | 5.0 | 10,0000 | - |
| Arsenic | 7440-38-2 | 5.0 | -- | 10 |
| Barium | 7440-39-3 | 100 | -- | 2000 |
| Benzene | 71-43-2 | 0.07 | 1400 | -- |
| Cadmium | 7440-43-9 | 1.0 | -- | 2 |
| Carbon disulfide | 75-15-0 | 14.4 | 288,000 | -- |
| Carbon tetrachloride | 56-23-5 | 0.07 | 1400 | - |
| Chlordane | 57-74-9 | 0.03 | 600 | - |
| Chlorobenzene | 108-90-7 | 1.4 | 28,000 | -- |
| Bis (2-Chloroethyl)ether | 111-44-4 | 0.05 | 1000 | -- |
| Chloroform | 67-66-3 | 0.07 | 1400 | - |
| Chromium | 1333-82-0 | 5.0 | -- | 100 |
| o-Cresol | 95-48-7 | 10.0 | 200,000 | |
| m-Cresol | 108-39-4 | 10.0 | 200,000 | |
| p-Cresol | 106-44-5 | 10.0 | 200,000 | -- |
| 2,4-D | 94-75-7 | 1.4 | 28,000 | |
| 1,2-Dichlorobenzene | 95-50-1 | 4.3 | 86,000 | -- |
| 1,4-Dichlorobenzene | 106-46-7 | 10.8 | 216,000 | -- |
| 1,2-Dichloroethane | 107-06-2 | 0.40 | 8000 | |
| 1,1-Dichloroethene | 75-35-4 | 0.1 | 2000 | |
| 2,4-Dinitrotoluene | 121-14-2 | 0.13 | 2600 | |
| Endrin | 72-20-8 | 0.003 | 60 | |
| Heptachlor (and its hydroxide) | 76-44-2 | 0.001 | 20 | - |
| Hexachlorobenzene | 118-74-1 | 0.13 | 2600 | |
| Hexachlorobutadiene | 87-68-3 | 0.72 | 14,400 | |
| Hexachloroethane | 67-72-1 | 4.3 | 86,000 | |
| Isobutanol | 78-83-1 | 36 | 720;000 | |
| Lead | 7439-92-1 | 5.0 | -- | 10 |
| Lindane | 58-89-9 | 0.06 | 1200 | |
| Mercury | 7439-97-6 | 0.2 | -- | |
| Methoxychlor | 72-43-5 | 1.4 | 28,000 | |
| Methylene chloride | 75-09-2 | 8.6 | 172,000 | |
| Methyl ethyl ketone | 78-93-3 | 7.2 | 144,000 | - |
| Nitrobenzene | 98-95-3 | 0.13 | 2600 | |

TABLE 4.0.6. (continued)

| Contaminant | CAS No | Regulatory Limit[a] mg/L | Calculated Threshold Limit[b] µg/kg | Calculated Threshold Limit[b] mg/kg |
|---|---|---|---|---|
| Pentachlorophenol | 87-86-5 | 3.6 | 72,000 | -- |
| Phenol | 108-95-2 | 14.4 | 288,000 | -- |
| Pyridine | 110-86-1 | 5.0 | 100,000 | -- |
| Selenium | 7782-49-2 | 1.0 | -- | 20 |
| Silver | 7440-22-4 | 5.0 | -- | 100 |
| 1,1,1,2-Tetrachloroethane | 630-20-6 | 10.0 | 200,000 | -- |
| 1,1,2,2-Tetrachloroethane | 79-34-5 | 1.3 | 26,000 | -- |
| Tetrachloroethene | 127-18-4 | 0.1 | 2000 | -- |
| 2,3,4,6-Tetrachlorophenol | 58-90-2 | 1.5 | 30,000 | -- |
| Toluene | 108-88-3 | 14.4 | 288,000 | -- |
| Toxaphene | 8001-35-2 | 0.07 | 1400 | -- |
| 1,1,1-Trichloroethane | 71-65-6 | 30 | 600,000 | -- |
| 1,1,2-Trichloroethane | 79-00-5 | 1.2 | 24,000 | -- |
| Trichloroethene | 79-01-6 | 0.07 | 1400 | -- |
| 2,4,5-Trichlorophenol | 95-95-4 | 5.8 | 116,000 | -- |
| 2,4,6-Trichlorophenol | 88-06-2 | 0.30 | 6000 | -- |
| 2,4,5-TP (Silver) | 93-76-5 | 0.14 | 2800 | -- |
| Vinyl chloride | 75-01-4 | 0.05 | 1000 | -- |

a. Proposed regulatory levels are from Federal Register, Vol. 51, No. 114, June 13, 1986, p. 21652.

b. mg/kg and µg/kg values are for comparison with analytical results of solid samples to determine if samples could have exceeded regulatory limits. The values are adjusted for volumes and weights used in the TCLP protocol. See Section 3.2.11.2 for calculation. They should not be interpreted as legal regulatory limits.

TABLE 4.0.7. TRACE CHEMICAL ELEMENT CONTENT OF NATURAL SOILS[a]

| Element | Common Range (ppm) | Average (ppm) |
|---|---|---|
| Aluminum | 10000 to 300000 | 71000 |
| Antimony | 2 to 10 | -- |
| Arsenic | 1 to 50 | 5 |
| Barium | 100 to 3000 | 430 |
| Beryllium | 0.1 to 40 | 6 |
| Boron | 2 to 100 | 10 |
| Bromine | 1 to 10 | 5 |
| Cadmium | 0.01 to 0.7 | 0.06 |
| Cesium | 0.3 to 25 | 6 |
| Chlorine | 20 to 900 | 100 |
| Chromium | 1 to 1000 | 100 |
| Cobalt | 1 to 40 | 8 |
| Copper | 2 to 100 | 30 |
| Fluorine | 10 to 4000 | 200 |
| Gallium | 0.4 to 300 | 30 |
| Gold | -- | <1 |
| Iodine | 0.1 to 40 | 5 |
| Lanthanum | 1 to 5000 | 30 |
| Lead | 2 to 200 | 10 |
| Lithium | 5 to 200 | 20 |
| Magnesium | 600 to 6000 | 5000 |
| Manganese | 20 to 3000 | 600 |
| Mercury | 0.01 to 0.3 | 0.03 |
| Molybdenum | 0.2 to 5 | 2 |
| Nickel | 5 to 500 | 40 |
| Radium | $8 \times 10^{-5}$ | -- |
| Rubidium | 50 to 500 | 10 |
| Selenium | 0.1 to 2 | 0.3 |
| Silver | 0.01 to 5 | 0.05 |
| Strontium | 50 to 1000 | 200 |
| Tin | 2 to 200 | 10 |
| Tungsten | -- | 1 |
| Uranium | 0.9 to 9 | 1 |
| Vanadium | 20 to 500 | 100 |
| Yttrium | 25 to 250 | 50 |
| Zinc | 10 to 300 | 50 |
| Zirconium | 60 to 2000 | 300 |

a. EPA Office of Solid Waste and Emergency Response, Hazardous Waste Land Treatment, SW-874 (April 1983).

## 4.1 Environmental Problem 1--Active Firing Sites

- Request Numbers: LA201, LA202, LA205

- Requester: W. Joyce

- Finding and Basis: The twenty-six active firing sites have the potential to contaminate surrounding soils (both surface and subsurface). As a result of the experiments, all of the firing sites have the potential for high explosives and barium contamination. In addition, at all sites except TA-11-26 and the sites at TA-40, there is a potential for radioactive and toxic metals contamination.

  A firing site is a location where high explosives are detonated. Included in this classification are the drop tower and gun sites. As a result of the detonation, material is dispersed over a wide area surrounding the firing site as well as being driven into subsurface soil. Therefore, there may be beryllium, unexploded high explosives and barium (one of the constituents of several high explosive formulations) at all the firing sites. In addition, at a majority of the firing sites, except TA-11-26 and the sites at TA-40, LANL may have used radioactive materials such as depleted uranium, natural uranium, or thorium.

  The twenty-six firing sites were divided into several categories based on the constituents used, the amount of high explosives fired at a time, and the history of use at the site The constituents used would determine the substances contaminating the surrounding soils. The amount of high explosives used would determine the potential distance and area the contamination may have spread for the firing site. The first group includes TA-11-26 and the sites at TA-40 (TA-40-4, 5, 8, 12 and 15) all of which did not have radioactive materials used at the firing sites. The remaining sites all have the potential for radioactive contamination. These sites can then be classified by

history of use and the amount of high explosives fired in a single experiment. Active sites with large allowable quantities of high explosives include the TA-36 sites (TA-36 Eenie, Meenie, Minie, Lower Slobbov..., and IJ). Active sites with medium amounts of high explosives used include TA-15 Phermex and Ector. Infrequently used but still considered active with large amounts of historical usage are TA-14-44 and 45. Another type of firing sites are those at TA-39 (TA-39-6, 57, and 88) where shock wave experiments are conducted (usually small to medium amounts of high explosives and located in a canyon). The five sites at TA-14 (TA-14-25, 26, 27, 28, and 29) are used for small sensitivity studies where small amounts of high explosives are detonated to determine characteristics of the explosive. At these sites, unexploded high explosives are expected. These sites also have small amounts of high explosives per use and small quantities per year. The final category is gun sites, TA-36-56 and 69 and TA-14-34, where projectiles are fired at high explosives or into canyon walls.

### 4.1.1 Sampling and Analysis Objectives

- Statement

Sampling will determine the presence and general distribution of contaminants in the surface soil surrounding the firing sites. The expected contaminants include barium, high explosives, uranium (depleted and natural), thorium, and metals such as copper, aluminum, lead, and mercury. The levels of contaminants in the samples will be compared to background levels.

Not all active firing sites will be sampled. Representative firing sites will be sampled and the results extrapolated to similar sites.

- Supporting Information

The sampling results will be used to evaluate the following:

1. Average concentration of contaminants.

2. General distribution of the contamination on the ground surface.

The contaminants of interest include barium (from high explosives), beryllium, high explosives, depleted and natural uranium, and other inorganic constituents such as copper and aluminum.

All firing sites were considered to be heterogeneous in nature. The maximum extent of contamination should be be 1250 ft radius from the firing point. LANL uses a safety radius of 1250 ft for missile protection. It is not expected that all sites have this extent of contamination. Those sites that use less than 500 lb of high explosive should have a smaller impact radius--suggested 500-ft radius.

### 4.1.2 Sampling and Analysis Design

- Sampling Design

Table 4.1.1 provides specific field sampling information on each sample site.

A series of composite surface soil samples were collected as planned at various set radii from the center of each firing site sampled (See Figures 4.1.1, 4.1.2, and 4.1.3). At those sites, the composite samples consisted of four subsamples collected equidistant from the center of the firing site. Three to five of these circles of composite samples were collected per firing site. The number of composites and distance from the center of

each firing site was based on the amount of high explosive used per shot and topographic considerations unique to each site. Visual inspection of the surface soil and mechanical screening were used to detect larger-sized residuals of high explosives, which constitute sampling and sample handling hazards.

To ensure uniform subsample volume, a precleaned stainless steel, 3-in. dia hand auger was used to collect aliquots for compositing. The original sampling design called for using Teflon spoons; however, use of the augers enhanced sample quality without compromising safety. Samples were collected at 0-3 in. with the exception of samples from TA-40-15, which were collected at 0-6 in. Information obtained from the field team indicated that areas at TA-40-15 within approximately 100 ft of the firing site center were periodically raked or graded. This increased the likelihood of contaminants present at depths greater than 3-in. Aluminum pans lined with plastic and plastic pans were used for compositing samples, since aluminum is a contaminant of interest. Plastic was the preferred container material for high explosive sampling due to its nonsparking property (organic analyses were not performed on these samples).

Following are listed locations of samples and other sampling information:

TABLE 4.1.1. SAMPLE DESIGN SUMMARY TABLE

| Sample Number | Area | Subsample Location | Subsamples/ Composite |
|---|---|---|---|
| LA20101 | TA-40-15 Active Firing Site | On a semicircle 20 ft from steel plate at firing site center. The original sample design called for samples to be collected on a 30 ft radius of the plate | 4 |
| LA20102 | | On a semicircle with a center at the steel plate and a radius at the base of the sand mound near the canyon rim (approximately 46 ft). | 4 |

TABLE 4.1.1 (continued)

| Sample Number | Area | Subsample Location | Subsamples/ Composite |
|---|---|---|---|
| | | Samples along the radius from the base of the sand mound back toward the dirt access road at evenly spaced intervals | |
| LA20103 | | Equidistant along the sand mound which parallels the canyon rim (approximately 100 ft). | 4 |
| LA20201 | TA-36 Lower Slobbovia Active Firing Site | Within a 10-ft-dia circle at the center of firing site | 4 |
| LA20202 | | On a circle 100 ft from center | 4 |
| LA20203 | | On a circle 250 ft from center | 4 |
| LA20204 | | On a circle 500 ft from center. | 4 |
| LA20205 | | On a circle 750 ft from center<br>(Offset locations between circles by 18 degrees). | 4 |
| LA20501 | TA-15-44 Active Firing Site | Within a 10-ft-dia circle at the center of firing site | 4 |
| LA20502 | | On a circle 100 ft from center | 4 |
| LA20503 | | On a circle 250 ft from center | 4 |
| LA20504 | | On a circle 450 ft from center. The original design called for a 500 ft radius. | 4 |

- Analytical Design

Soil samples from all firing sites sampled were analyzed as planned for metals to ICP detection limits and high explosives. Samples from specific firing sites were also analyzed for lead by GFAAS, mercury by CVAA, uranium isotopes, thorium, and gamma emitting radionuclides if those constituents had been used at that particular site. Note that lead and mercury were only requested for LA202 and LA205.

### 4.1.3 Field and Analytical Data

- Field Data

*The high explosive spot test was negative for all samples. Field surveys for organic vapors by HNU photoionization detector were not requested for these surface soil samples. A piece of depleted uranium (approximately 1/2-in. dia) was found in subsample A of sample LA20201 and had a measured activity of 2.5 mR/h beta radiation at contact. Radioactivity exceeding background was not detected at other sampling locations. Metal and plastic debris were observed on the ground surface by field sampling personnel at distances up to 750 ft from the center of all firing sites sampled.*

- Field Data Evaluation

A high explosive spot test kit (supplied by LANL) was used to determine the presence of high explosives in the field. The high explosives spot test of all 11 samples for this problem were negative.

- Analytical Data

*Analytical data for this environmental problem are presented in Tables 4.1.2 through 4.1.3.*

*Barium, copper, and zinc were detected in the three samples collected from the active firing site at TA-40-15 (LA201) in concentrations ranging from 400 to 660 mg/kg, 32 to 150 mg/kg, and 47 to 78 mg/kg, respectively. Barium, chromium, lead, and zinc were detected in the five samples collected from the active firing site at TA-36 (LA202). Concentrations ranged from 82 to 300 mg/kg for barium, 4 to 10 mg/kg for chromium, 12 to 200 mg/kg for lead, and 28 to 420 mg/kg for zinc. The four samples collected at TA-15-44 (LA205) contained barium, beryllium, chromium, copper, lead, and zinc at concentrations ranging from 55 to 225 mg/kg, 0.6 to 16 mg/kg, 5 to 14 mg/kg, 4 to 780 mg/kg, 5 to 510 mg/kg, and 21 to 190 mg/kg, respectively. High explosives were not detected in any of the samples collected for this environmental problem.*

- Analytical Data Evaluation

<u>LA201: TA-40-15, Active Firing Site.</u> None of the samples collected from this location contained detectable quantities of high explosives. Metals detected in these three samples include barium, copper, and zinc, with the greatest number of analytes detected in sample 02, located approximately 46 ft from the firing site center. Copper concentration in sample 02 was greater than that found in samples 01 and 03 by a factor of three. Aluminum was detected in all samples at concentrations ranging from 3270 mg/kg to 7800 mg/kg. Aluminum data are located in the QC tables in Appendix E of this document.

<u>LA202: TA-36, Lower Slobbovia.</u> None of the samples from this location contained detectable quantities of high explosives. Lead

by GFAAS and mercury analyses were specifically requested for samples collected from this location. All five of the samples collected from this location contained detectable concentrations of barium, chromium, lead, and zinc. Samples 01, 02, and 03 also contained 15 to 200 mg/kg lead. The highest concentration of barium (304 mg/kg) was found in the sample collected nearest the firing site (sample 01). Concentrations of copper, lead, and zinc in sample 02 are greater than those found in the other samples. Beryllium was also detected in samples 02 and 03 at 1.0 and 1.2 mg/kg, respectively. Mercury was not detected in any of the samples from this firing site. Aluminum was detected in all samples at concentrations ranging from 2430 mg/kg to 12,500 mg/kg. Aluminum data are located in the QC tables in Appendix E of this document.

<u>LA205: TA-15-44, Active Firing Site.</u> None of the samples from this location contained detectable quantities of high explosives. Lead by GFAAS and mercury analyses were specifically requested for samples collected from this location. Lead was detected in all samples, at concentrations ranging from 5.6 mg/kg to 513 mg/kg. Mercury was not detected in any of the samples. All four of the samples collected from this location also contained detectable concentrations of barium, beryllium, chromium, copper, and zinc. Samples 01 and 03 also contained nickel, at 12.6 and 5.7 mg/kg, respectively. Levels of barium, lead, and zinc detected in sample 01 are higher than concentrations found in the samples collected further from the firing site center. Copper concentrations in samples 01 and 02 are greater than those found in samples 03 and 04. Aluminum was detected in all samples at concentrations ranging from 4090 mg/kg to 6550 mg/kg. Aluminum data are located in the QC tables in Appendix E of this document.

- Radiological Data

*The results of these analyses are given in Table 4.1.4.*

*Gamma screens of the three samples from firing site TA-40-15 indicated the presence of only natural activities ($^{40}K$, $^{232}Th$ chain, and $^{238}U$ chain). The nine samples from firing sites TA-36 and TA-15-44 (LA202 and LA205) showed the presence of $^{137}Cs$ (55 to 722 pCi/kgW), $^{235}U$ (100 to 3300 pCi/kgW), and $^{238}U$ in excess of the equilibrium amount (5900 to 362,000 pCi/kgW) in most samples; and $^{56}Co$ and $^{234}U$ may have been present in one or two samples. The natural activities ($^{40}K$, $^{232}Th$ chain, and $^{238}U$ chain) were detected in all samples.*

*In addition, the presence of $^{230}Th$ was detected in all the samples from firing sites TA-36 and TA-15-44 at concentrations ranging from 700 to 2600 pCi/kgD. The total uranium concentration was also measured for samples from these two firing sites and ranged from 4000 to 726,000 µg/kgD.*

- Radiological Data Evaluation

For the three samples from site TA-40-15 (LA201) only gamma screens were obtained. For the other firing site samples, the measurements included gamma spectral, alpha spectral, and total uranium analyses.

For the samples from firing site TA-36 (LA202), the gamma spectral analyses indicated the presence of $^{238}U$ in excess of the equilibrium concentration, $^{137}Cs$, and $^{235}U$ in addition to the natural activities. The $^{137}Cs$ concentrations ranged 184 to 722 pCi/kgW with some tendency to increase with distance from the center of the firing site. The excess $^{238}U$ seems to be independent of the distance and varies from 5900 to 65,400 pCi/kgW. In contrast, the $^{235}U$ (100 to 625 pCi/kgW) decreases with distance from the center of the firing site.

The alpha spectral analyses for the samples from TA-36 gave 700 to 2600 pCi/kgD for $^{230}$Th. The total uranium concentration decreases with distance from the center of the firing site (4000 to 91,000 μg/kgD).

For the samples from firing site TA-15-44 (LA205), the gamma analyses indicate the presence of $^{137}$Cs, $^{235}$U, $^{238}$U in excess of the equilibrium concentration, possible $^{56}$Co, and $^{234}$U in addition to the natural activities. The distance dependences are similar to the previous case: $^{137}$Cs (55 to 244 pCi/kgW) tends to increase with distance; the $^{238}$U excess (48,400 to 362,000 pCi/kgW and unobserved in one sample) shows no distance dependence; and $^{235}$U (101 to 3300 pCi/kgW) decreases with distance. The possible presence of $^{234}$U and $^{56}$Co at about the detection limits was observed in one or two samples.

The alpha spectra for the samples from TA-15-44 give $^{230}$Th concentrations of 800 to 1500 pCi/kgD. The total uranium concentrations decrease with distance from 7000 to 726,000 μg/kgD.

### 4.1.4 Limitations and Qualifications

- Data Quality Level

  Sampling design, techniques, and documentation for this environmental problem are Quality Level I. Analytical data are generally Quality Level I and II, with the following exceptions: LA202 mercury data is Quality Level III due to the excessive holding time.

- Field Data

  None.

Analytical Data

LA201: TA-40-15, Active Firing Site. There are no adverse effects indicated by the quality control data that impact the usability of the data obtained for high explosives.

Samples 01 and 02 were analyzed for metals to ICP detection limits in a common SDG. The duplicate RPD for zinc (21.5%) is slightly greater than the 20% control limit, and may indicate that the imprecision associated with zinc quantitation for these two samples is greater than normal. The variability could be due to sample inhomogeneity. The reported cadmium concentration for sample 02 may be biased low, as indicated by a matrix spike recovery of 71%. The true cadmium concentration may be as much as 140% of the reported value. CRI standard recoveries also indicate that the low-end calibration for cadmium was low by an approximate factor of two, which would impart low bias to the reported cadmium concentration.

Sample 03 was analyzed for metals to ICP detection limits in a separate SDG. The matrix spike recovery for copper is 1270%, which indicates that quantitation may be biased high by as much as 92% of the reported value. Duplicate RPD for copper is also out of control (36.5%), indicating higher than normal imprecision. The results of the matrix spike and duplicate analyses imply that copper quantitation for this sample is highly uncertain. Matrix spike recoveries for cadmium and zinc are 192% and 175%, respectively, and imply that reported values for these elements may be biased high by as much as 45% (i.e., the true values may be only 55% of the reported values). The high spike recoveries may be due to sample inhomogeneity or matrix interferences. While it is possible that external contamination could contribute to the abnormally high recoveries, no specific contamination source could be identified. The analytical and total holding times were exceeded for sample 03 by 40 and 42 days, respectively. Due to

the stable, nonvolatile nature of the analytes, the holding time violation is unlikely to have adverse impact on data quality.

LA202: TA-36, Lower Slobbovia. RDX was detected on the primary analysis of samples 01 and 02 at concentrations of 2.2 and 1.6 µg/g, which is basically at the detection limit of 2.0 µg/g. Because there was no confirmation data reported associated with these findings, the data were not reported. There is a possibility of false negatives for HMX due to an interference that would preclude identification of this compound. This interference may also explain the high recoveries (146 and 155%) noted for RDX in the matrix spike and matrix spike duplicate analyses. Because there were no munitions or munitions by-products detected in any of the other samples collected from this location, there is minimal impact to the usability of the data.

Mercury total and analytical holding times were exceeded by at least 192 days for all samples because the analyses were unavoidably delayed. Quantitative information is not available to estimate the impact of the delays in analysis. It is possible that reported mercury results underestimate true values or are false negatives (i.e., mercury originally present but not detected at time of analysis due to volatilization loss).

All lead values were determined by the method of standard additions. ICV and CCV recoveries for lead by GFAAS were uniformly above the upper 110% control limit; the second source ICV was 130% recovered, and CCV recoveries ranged from 115% to 128%. The solid LCS recovery for lead by GFAAS was also high by comparable amount (128%). Therefore, all reported lead concentrations may be high by a factor of 1.2 to 1.3. The duplicate RPD for lead by GFAAS (28%) was greater than the 20% control limit, and therefore reported lead values have higher than normal imprecision associated with them.

Samples 01, 02, and 03 were analyzed for metals to ICP detection limits, in a common SDG. Antimony, arsenic, selenium, and thallium were inadvertently omitted from the ICP-AES matrix spike. Therefore, no data exist to confirm recovery of these analytes from the sample matrix. The reported beryllium values for samples 02 and 03 (1.0 and 1.2 mg/kg, respectively) may have been high biased due to detection of beryllium in the associated QC blanks (0.9 mg/kg).

Samples 04 and 05 were also analyzed for metals to ICP detection limits in a common SDG. Antimony, arsenic, selenium, and thallium were inadvertently omitted form the ICP-AES matrix spike. Therefore, no data exist to confirm recovery of these analytes from the sample matrix. Reported zinc concentrations for these two samples may have high bias due to detection of 3.7 mg/kg found in the associated QC blanks. The matrix spike recovery for barium (72%) was slightly under the lower 75% control limit, indicating low recovery of this analyte from the sample matrices. Reported barium values therefore may have up to 40% bias (i.e., true barium concentrations may be as much as 140% of the reported values). Duplicate RPDs for barium (107%), chromium (105%), and zinc (60%) are outside the 20% control limit. Sample inhomogeneity may contribute to the high RPDs, and true concentrations may vary by the same percentages as the RPDs from the reported values.

<u>LA205: TA-15-44, Active Firing Site.</u> There is a possibility of both false positives and false negatives associated with these data for high explosives analyses. These samples were analyzed twice due to low recoveries of the matrix spike standards. The low matrix spike recoveries were ultimately attributed to a problem with the preparation of the standard. The %RSD for HMX on the linearity check was 44%, and RDX was not detected on the low end of the calibration range (0.2 ppm standard). These facts, coupled with the poor accuracy and precision indicated by the matrix spike and matrix spike duplicate samples, and the lack of information provided detailing the cause of the preparation

problem with the spike solution, made it difficult to assess the quality of the high explosives data. HMX and RDX were detected in sample 01 on the primary column at 2.1 μg/g and 3.8 μg/g, respectively (detection limit 2.0 μg/g). However, there were no confirmation data provided with the data package; consequently, the data were not reported. There were no munitions detected in any of the other three samples (02, 03, and 04).

Analyses for metals to ICP detection limits for these samples were performed on a different ICP-AES instrument than were samples from request numbers LA201 and LA202. The instrument used for analyses of LA205 samples generally had lower instrument detection limits than did the instrument used for LA201 and LA202. The reported copper concentration for sample 04 may be biased high by approximately 2 mg/kg due to calibration error evidenced by high blank values (2.0 mg/kg copper detected in the associated QC blanks. QC data associated with the inorganics analyses do not suggest any other adverse impact on data quality.

- Radiological Data

The results of QC checks indicate that the performance of the instruments and the analytical methods were adequate to ensure accuracy and reproducibility of the results obtained using them. In addition, the background seen by each instrument/detector was sufficiently low and sufficiently constant to ensure accurate compensation for background effects.

The uncertainties cited in the tables for the total uranium results appear to be ten percent of the reported concentrations. Unfortunately, the uncertainties were reported with the same number of significant figures as the concentrations. When using the total uranium results, the reader therefore should round the uncertainties to one less significant figure.

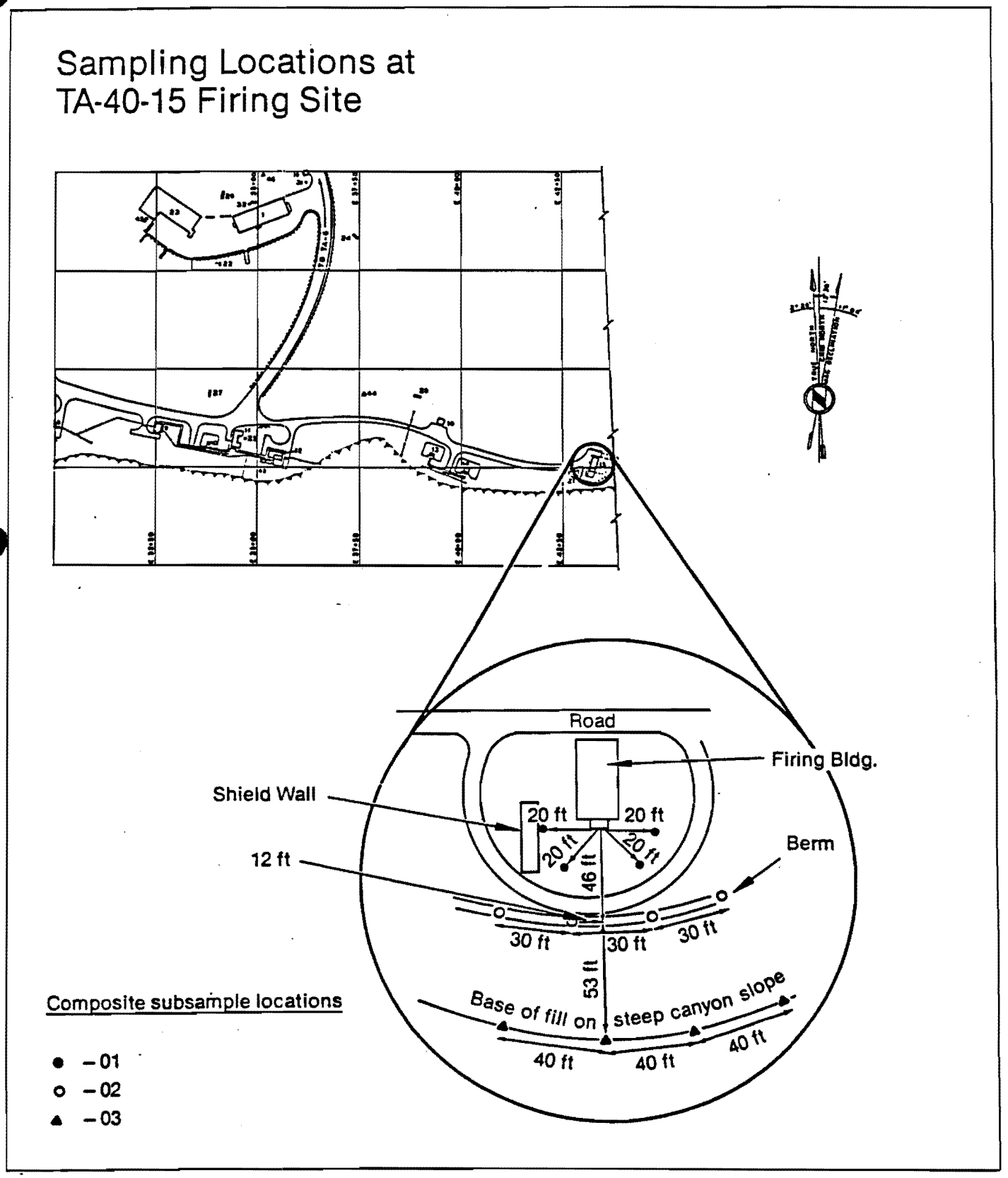
Sampling Locations at
TA-40-15 Firing Site
Road
Firing Bldg.
Shield Wall
20 ft
20 ft
20 ft
20 ft
46 ft
12 ft
Berm
30 ft
30 ft
30 ft
53 ft
Base of fill on steep canyon slope
40 ft
40 ft
40 ft
Composite subsample locations
● –01
○ –02
▲ –03

Figure 4.1.1

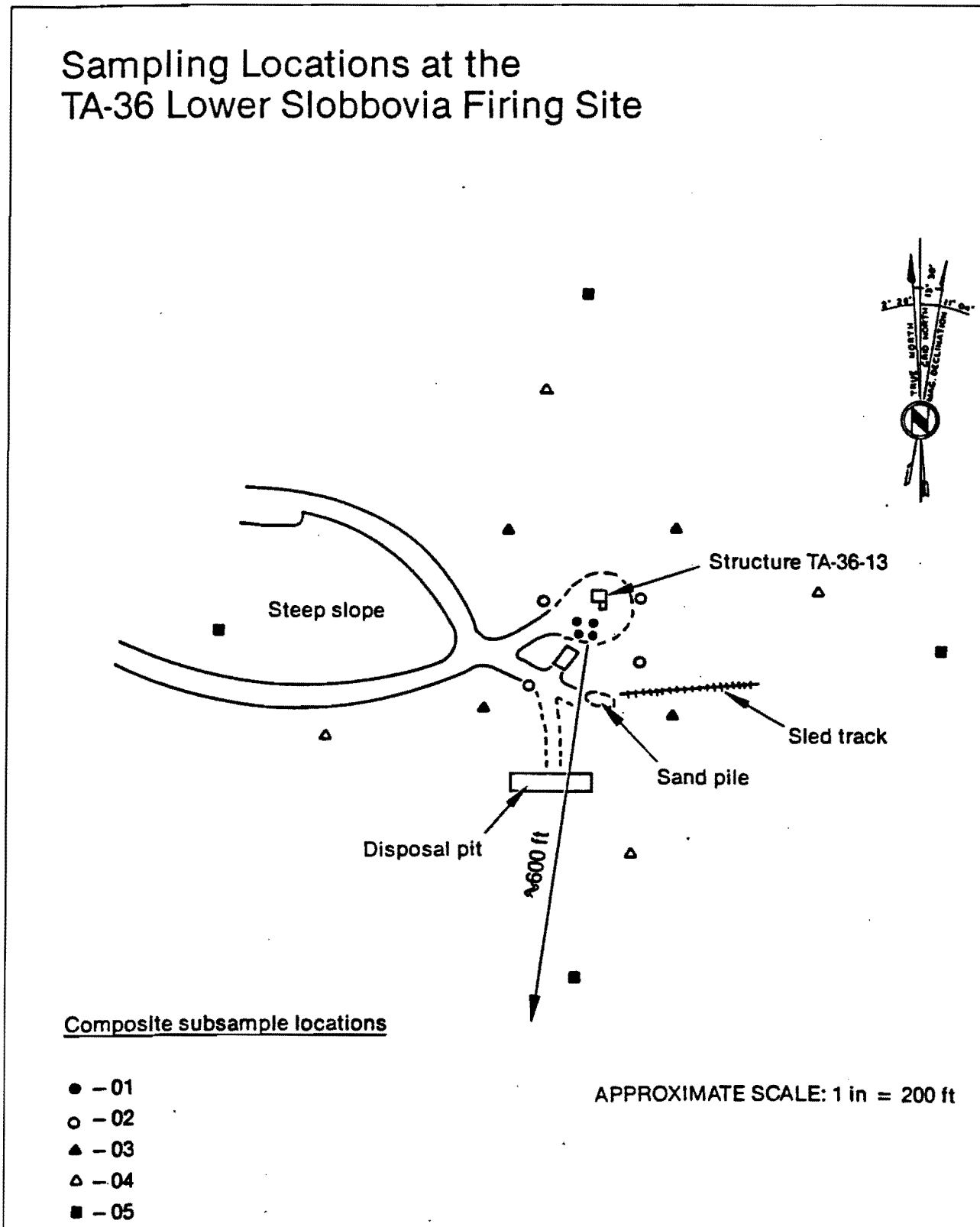
Sampling Locations at the
TA-36 Lower Slobbovia Firing Site
Structure TA-36-13
Steep slope
Sled track
Sand pile
Disposal pit
~600 ft
Composite subsample locations
● – 01
○ – 02
▲ – 03
△ – 04
■ – 05
APPROXIMATE SCALE: 1 in = 200 ft

Figure 4.1.2

# Sampling Locations at the TA-15-44 Firing Site

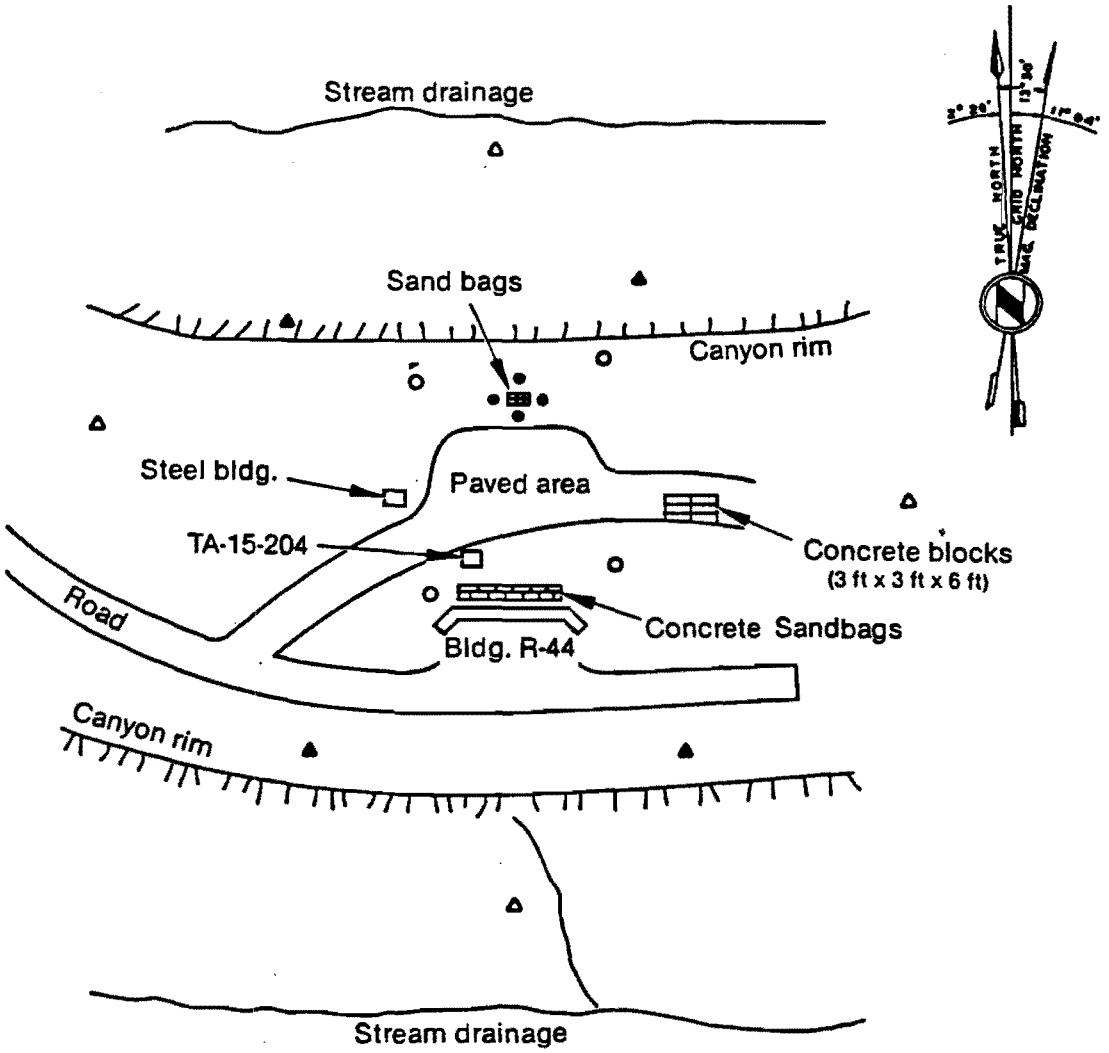


Composite subsample locations

- ● – 01 (10 ft radius)
- ○ – 02 (100 ft radius)
- ▲ – 03 (250 ft radius)
- △ – 04 (450 ft radius)

NOT TO SCALE

Figure 4.1.3

TABLE 4.1.2 LOS ALAMOS NATIONAL LABORATORY - COMPLETION TABLE - ENVIRONMENTAL PROBLEM 1

(Column Header Legend: P = Planned C = Collected A = Analyzed)
(Status Column Legend: Del = Deleted Dev = Deviation)

| REQUEST NUMBER | SN | STAT | DATE COLLECTED mm/dd/yy | AREA | LOCATION | TYPE LOCATION | MEDIA | TYPE | NUMBER SAMPLES | | ICP METALS | | | MERCURY | | | LEAD | | | HIGH EXPL | | | GAMMA ANALYSIS | | | THORIUM | | | TOTAL URANIUM | | |
|---|---|---|---|---|---|---|---|---|---|---|---|---|---|---|---|---|---|---|---|---|---|---|---|---|---|---|---|---|---|---|---|
| | | | | | | | | | P | C | P | C | A | P | C | A | P | C | A | P | C | A | P | C | A | P | C | A | P | C | A |
| LA201 | | | 05/25/88 | TA-40-15 | ACTIVE F.S. | FIRING SITE | SOIL | S.COMP | 3 | 3 | 3 | 3 | 3 | | | | | | | 3 | 3 | 3 | | | | | | | | | |
| LA202 | | | 06/16/88 | TA-36 | ACTIVE F.S. | L.SLOBBOVIA | SOIL | S.COMP | 5 | 5 | 5 | 5 | 5 | 5 | 5 | 5 | 5 | 5 | 5 | 5 | 5 | 5 | 5 | 5 | 5 | 5 | 5 | 5 | 5 | 5 | 5 |
| LA205 | | | 06/13/88 | TA-15-44 | ACTIVE F.S. | FIRE SITE | SOIL | S.COMP | 4 | 4 | 4 | 4 | 4 | 4 | 4 | 4 | 4 | 4 | 4 | 4 | 4 | 4 | 4 | 4 | 4 | 4 | 4 | 4 | 4 | 4 | 4 |
| Totals for Problem Number 1 | | | | | | | | | 12 | 12 | 12 | 12 | 12 | 9 | 9 | 9 | 9 | 9 | 9 | 12 | 12 | 12 | 9 | 9 | 9 | 9 | 9 | 9 | 9 | 9 | 9 |

TABLE 4.1.3 LOS ALAMOS NATIONAL LABORATORY - INORGANIC DATA - ENVIRONMENTAL PROBLEM 1



| AREA | TA-40-15 | TA-40-15 | TA-40-15 | TA-36 | TA-36 | TA-36 |
|---|---|---|---|---|---|---|
| LOCATION | ACTIVE F.S. | ACTIVE F.S. | ACTIVE F.S. | ACTIVE F.S. | ACTIVE F.S. | ACTIVE F.S. |
| TYPE OF LOCATION | FIRING SITE | FIRING SITE | FIRING SITE | L.SLOBBOVIA | L.SLOBBOVIA | L.SLOBBOVIA |
| SAMPLE NUMBER | LA20101XW | LA20102XW | LA20103XW | LA20201XW | LA20202XW | LA20203XW |
| MEDIA | SOIL | SOIL | SOIL | SOIL | SOIL | SOIL |
| UNITS | mg/kg | mg/kg | mg/kg | mg/kg | mg/kg | mg/kg |
| SDG NUMBER | LA20101XW | LA20101XW | LA20103XW | LA20201XW | LA20201XW | LA20201XW |
| **FIELD MEASUREMENTS** | | | | | | |
| Depth (ft) | 0-0.5 | 0-0.5 | 0-0.5 | 0-0.25 | 0-0.25 | 0-0.25 |
| **ANALYTES** | | | | | | |
| Antimony | --- | --- | --- | --- | --- | --- |
| Arsenic | --- | --- | --- | --- | --- | --- |
| Barium | 435 | 657 | 396 | 304 | 177 | 101 |
| Beryllium | --- | --- | --- | --- | 1.0 B | 1.2 |
| Cadmium | --- | 2.1 B | --- | --- | --- | --- |
| Chromium | --- | --- | --- | 9.5 | 4.1 | 6.2 |
| Copper | 47.6 | 151 | 32.2 | 145 | 974 | 14.5 |
| Lead[c] | --- | --- | --- | 16.4 | 198 | 14.7 |
| Mercury[b] | NR | NR | NR | --- | --- | --- |
| Nickel | --- | --- | --- | --- | --- | --- |
| Selenium | --- | --- | --- | --- | --- | --- |
| Silver | --- | --- | --- | --- | --- | --- |
| Thallium[d] | --- | --- | --- | --- | --- | --- |
| Zinc | 47.3 | 61.4 | 78.4 | 27.9 | 424 | 44.7 |
| % Solids | 94.1 | 92.9 | 89.1 | 96.7 | 93.8 | 95.9 |
| Total (Allowed) Hold Time[a] | 99(182)d | 99(182)d | 224(182)d* | 151(182)d | 154(182)d | 154(182)d |
| Total (Allowed) Hold Time[b] | | | | 122(28)d* | 122(28)d* | 122(28)d* |
| Total (Allowed) Hold Time[c] | | | | 129(182)d | 132(182)d | 132(182)d |
| Total (Allowed) Hold Time[d] | | | | | | |

a. ICP.
b. CVAAS.
c. GFAAS-Pb.
d. GFAAS-Tl.

TABLE 4.1.3 LOS ALAMOS NATIONAL LABORATORY - INORGANIC DATA - ENVIRONMENTAL PROBLEM 1 (Continued)



| AREA | TA-36 | TA-36 | TA-15-44 | TA-15-44 | TA-15-44 | TA-15-44 |
|---|---|---|---|---|---|---|
| LOCATION | ACTIVE F.S. | ACTIVE F.S. | ACTIVE F.S. | ACTIVE F.S. | ACTIVE F.S. | ACTIVE F.S. |
| TYPE OF LOCATION | L.SLOBBOVIA | L.SLOBBOVIA | FIRE SITE | FIRE SITE | FIRE SITE | FIRE SITE |
| SAMPLE NUMBER | LA20204XW | LA20205XW | LA20501XW | LA20502XW | LA20503XW | LA20504XW |
| MEDIA | SOIL | SOIL | SOIL | SOIL | SOIL | SOIL |
| UNITS | mg/kg | mg/kg | mg/kg | mg/kg | mg/kg | mg/kg |
| SDG NUMBER | LA20204XW | LA20204XW | LA20501XW | LA20501XW | LA20501XW | LA20501XW |
| **FIELD MEASUREMENTS** | | | | | | |
| Depth (ft) | 0-0.25 | 0-0.25 | 0-0.25 | 0-0.25 | 0-0.25 | 0-0.25 |
| **ANALYTES** | | | | | | |
| Antimony | --- | --- | --- | --- | --- | --- |
| Arsenic | --- | --- | --- | --- | --- | --- |
| Barium | 133 | 82.2 | 225 | 82.9 | 58.5 | 55.4 |
| Beryllium | --- | --- | 16.3 | 4.7 | 2.4 | 0.56 B |
| Cadmium | --- | --- | --- | --- | --- | --- |
| Chromium | 6.9 | 4.9 | 13.5 | 5.4 | 5.7 | 5.2 |
| Copper | --- | --- | 747 | 779 | 46.0 | 4.1 B |
| Lead[c] | 14.4 | 12.2 | 513 | 31.3 | 5.6 | 12.1 |
| Mercury[b] | --- | --- | --- | --- | --- | --- |
| Nickel | --- | --- | 12.6 | --- | 5.7 B | --- |
| Selenium | --- | --- | --- | --- | --- | --- |
| Silver | --- | --- | --- | --- | --- | --- |
| Thallium[d] | --- | --- | --- | --- | --- | --- |
| Zinc | 37.9 | 39.1 | 194 | 39.1 | 33.0 | 21.0 |
| % Solids | 91.8 | 98.3 | 94.3 | 95.0 | 88.8 | 89.6 |
| Total (Allowed) Hold Time[a] | 154(182)d | 154(182)d | 14(182)d | 14(182)d | 14(182)d | 14(182)d |
| Total (Allowed) Hold Time[b] | 125(28)d* | 125(28)d* | 14(28)d | 14(28)d | 14(28)d | 14(28)d |
| Total (Allowed) Hold Time[c] | 132(182)d | 132(182)d | 7(182)d | 7(182)d | 7(182)d | 7(182)d |
| Total (Allowed) Hold Time[d] | | | 4(182)d | 4(182)d | 4(182)d | 4(182)d |

a. ICP.
b. CVAAS.
c. GFAAS-Pb.
d. GFAAS-Tl.

TABLE 4.1.4 LOS ALAMOS NATIONAL LABORATORY - HIGH EXPLOSIVE DATA - ENVIRONMENTAL PROBLEM 1



| AREA | TA-40-15 | TA-40-15 | TA-40-15 | TA-36 | TA-36 | TA-36 |
|---|---|---|---|---|---|---|
| LOCATION | ACTIVE F.S. | ACTIVE F.S. | ACTIVE F.S. | ACTIVE F.S. | ACTIVE F.S. | ACTIVE F.S. |
| TYPE OF LOCATION | FIRING SITE | FIRING SITE | FIRING SITE | L.SLOBBOVIA | L.SLOBBOVIA | L.SLOBBOVIA |
| SAMPLE NUMBER | LA20101XY | LA20102XY | LA20103XY | LA20201XY | LA20202XY | LA20203XY |
| MEDIA | SOIL | SOIL | SOIL | SOIL | SOIL | SOIL |
| UNITS | ug/g | ug/g | ug/g | ug/g | ug/g | ug/g |
| SDG NUMBER | LANL004 | LANL004 | LANL004 | LANL007 | LANL007 | LANL007 |
| FIELD MEASUREMENTS | | | | | | |
| Depth (ft) | 0-0.50 | 0-0.50 | 0-0.50 | 0-0.25 | 0-0.25 | 0-0.25 |
| ANALYTES | | | | | | |
| None detected | | | | | | |
| Total (Allowed) Hold Time | 7(14)d | 7(14)d | 7(14)d | 6(14)d | 6(14)d | 6(14)d |

TABLE 4.1.4 LOS ALAMOS NATIONAL LABORATORY - HIGH EXPLOSIVE DATA - ENVIRONMENTAL PROBLEM 1 (Continued)



| AREA | TA-36 | TA-36 | TA-15-44 | TA-15-44 | TA-15-44 | TA-15-44 |
|---|---|---|---|---|---|---|
| LOCATION | ACTIVE F.S. | ACTIVE F.S. | ACTIVE F.S. | ACTIVE F.S. | ACTIVE F.S. | ACTIVE F.S. |
| TYPE OF LOCATION | L.SLOBBOVIA | L.SLOBBOVIA | FIRE SITE | FIRE SITE | FIRE SITE | FIRE SITE |
| SAMPLE NUMBER | LA20204XY | LA20205XY | LA20501XY | LA20502XY | LA20503XY | LA20504XY |
| MEDIA | SOIL | SOIL | SOIL | SOIL | SOIL | SOIL |
| UNITS | ug/g | ug/g | ug/g | ug/g | ug/g | ug/g |
| SDG NUMBER | LANL007 | LANL007 | LANL005 | LANL005 | LANL005 | LANL005 |
| FIELD MEASUREMENTS | | | | | | |
| Depth (ft) | 0-0.25 | 0-0.25 | 0-0.25 | 0-0.25 | 0-0.25 | 0-0.25 |
| ANALYTES | | | | | | |
| None detected | | | | | | |
| Total (Allowed) Hold Time | 6(14)d | 6(14)d | 3(14)d | 3(14)d | 3(14)d | 3(14)d |

TABLE 4.1.5 LOS ALAMOS NATIONAL LABORATORY - RADIOLOGICAL DATA - ENVIRONMENTAL PROBLEM 1



| AREA | TA-40-15 | TA-40-15 | TA-40-15 | TA-36 | TA-36 |
|---|---|---|---|---|---|
| LOCATION | ACTIVE F.S. | ACTIVE F.S. | ACTIVE F.S. | ACTIVE F.S. | ACTIVE F.S. |
| TYPE OF LOCATION | FIRING SITE | FIRING SITE | FIRING SITE | L.SLOBBOVIA | L.SLOBBOVIA |
| SAMPLE NUMBER | LA20101W[d] | LA20102W[d] | LA20103W[d] | LA20201D | LA20201W |
| MEDIA | SOIL | SOIL | SOIL | SOIL | SOIL |
| UNITS | pCi/kgW | pCi/kgW | pCi/kgW | pCi/kgD | pCi/kgW |
| **Alpha Emitters** | | | | | |
| Thorium - 230 | na | na | na | 700 ±300 | na |
| Thorium - 232[a] | <6200 ±1800 | <7200 ±1100 | <8400 ±2500 | na | <5590 ±450 |
| Uranium - 234 | ---- | ---- | ---- | na | ---- |
| Uranium - 235 | ---- | ---- | ---- | na | 625 ±49.0 |
| Uranium - 238[a] | <8200 ±2300 | <6900 ±1300 | <11600 ±4300 | na | <6620 ±540 |
| Uranium - 238[b] | ---- | ---- | ---- | na | 65400 ±6500 |
| Uranium (all isotopes)[c] | na | na | na | 91000 ±9100 | na |
| **Gamma Emitters** | | | | | |
| Potassium - 40 | 19800 ±4400 | 17300 ±2600 | 19400 ±6500 | na | 15600 ±1300 |
| Cobalt - 56 | ---- | ---- | ---- | na | ---- |
| Cesium - 137 | ---- | ---- | ---- | na | ---- |

a. Total unbroken chain activity in equilibrium.
b. Activity in excess of U238 natural chain.
c. Units are ug (/L, /kgW, or /kgD) instead of pCi (/L, /kgW, or /kgD).
d. This column contains the results of the radiological screening run.

TABLE 4.1.5 LOS ALAMOS NATIONAL LABORATORY - RADIOLOGICAL DATA - ENVIRONMENTAL PROBLEM 1 (Continued)



| AREA | TA-36 | TA-36 | TA-36 | TA-36 | TA-36 |
|---|---|---|---|---|---|
| LOCATION | ACTIVE F.S. | ACTIVE F.S. | ACTIVE F.S. | ACTIVE F.S. | ACTIVE F.S. |
| TYPE OF LOCATION | L.SLOBBOVIA | L.SLOBBOVIA | L.SLOBBOVIA | L.SLOBBOVIA | L.SLOBBOVIA |
| SAMPLE NUMBER | LA20202D | LA20202W | LA20203D | LA20203W | LA20204D |
| MEDIA | SOIL | SOIL | SOIL | SOIL | SOIL |
| UNITS | pCi/kgD | pCi/kgW | pCi/kgD | pCi/kgW | pCi/kgD |
| **Alpha Emitters** | | | | | |
| Thorium - 230 | 2600 ±300 | na | 1200 ±400 | na | 1500 ±400 |
| Thorium - 232[a] | na | <10110 ±750 | na | <13500 ±1000 | na |
| Uranium - 234 | na | ---- | na | ---- | na |
| Uranium - 235 | na | 327 ±34.0 | na | 250 ±200 | na |
| Uranium - 238[a] | na | <11130 ±800 | na | <13200 ±1100 | na |
| Uranium - 238[b] | na | 29600 ±3800 | na | 5900 ±4400 | na |
| Uranium (all isotopes)[c] | 43000 ±4300 | na | 11000 ±1100 | na | 13000 ±1300 |
| **Gamma Emitters** | | | | | |
| Potassium - 40 | na | 20300 ±2000 | na | 25200 ±2100 | na |
| Cobalt - 56 | na | ---- | na | ---- | na |
| Cesium - 137 | na | 184 ±32.0 | na | 420 ±42.0 | na |

a. Total unbroken chain activity in equilibrium.
b. Activity in excess of U238 natural chain.
c. Units are ug (/L, /kgW, or /kgD) instead of pCi (/L, /kgW, or /kgD).
d. This column contains the results of the radiological screening run.

TABLE 4.1.5 LOS ALAMOS NATIONAL LABORATORY - RADIOLOGICAL DATA - ENVIRONMENTAL PROBLEM 1 (Continued)



| AREA | TA-36 | TA-36 | TA-36 | TA-15-44 | TA-15-44 |
|---|---|---|---|---|---|
| LOCATION | ACTIVE F.S. | ACTIVE F.S. | ACTIVE F.S. | ACTIVE F.S. | ACTIVE F.S. |
| TYPE OF LOCATION | L.SLOBBOVIA | L.SLOBBOVIA | L.SLOBBOVIA | FIRE SITE | FIRE SITE |
| SAMPLE NUMBER | LA20204W | LA20205D | LA20205W | LA20501D | LA20501W |
| MEDIA | SOIL | SOIL | SOIL | SOIL | SOIL |
| UNITS | pCi/kgW | pCi/kgD | pCi/kgW | pCi/kgD | pCi/kgW |
| **Alpha Emitters** | | | | | |
| Thorium - 230 | na | 1700 ±500 | na | 1100 ±300 | na |
| Thorium - 232[a] | <15500 ±1200 | na | <14060 ±990 | na | <7020 ±640 |
| Uranium - 234 | ---- | na | ---- | na | 89000 ±126000 |
| Uranium - 235 | 198 ±73.0 | na | 100 ±74.0 | na | 3300 ±240 |
| Uranium - 238[a] | <16600 ±1300 | na | <14500 ±1100 | na | <7570 ±990 |
| Uranium - 238[b] | ---- | na | ---- | na | 362000 ±34000 |
| Uranium (all isotopes)[c] | na | 4000 ±400 | na | 726000 ±73000 | na |
| **Gamma Emitters** | | | | | |
| Potassium - 40 | 24800 ±3000 | na | 22700 ±3700 | na | 16800 ±2100 |
| Cobalt - 56 | ---- | na | ---- | na | ---- |
| Cesium - 137 | 722 ±82.0 | na | 534 ±94.0 | na | 55.0 ±38.0 |

a. Total unbroken chain activity in equilibrium.
b. Activity in excess of U238 natural chain.
c. Units are ug (/L, /kgW, or /kgD) instead of pCi (/L, /kgW, or /kgD).
d. This column contains the results of the radiological screening run.

TABLE 4.1.5 LOS ALAMOS NATIONAL LABORATORY - RADIOLOGICAL DATA - ENVIRONMENTAL PROBLEM 1 (Continued)



| AREA | TA-15-44 | TA-15-44 | TA-15-44 | TA-15-44 | TA-15-44 |
|---|---|---|---|---|---|
| LOCATION | ACTIVE F.S. | ACTIVE F.S. | ACTIVE F.S. | ACTIVE F.S. | ACTIVE F.S. |
| TYPE OF LOCATION | FIRE SITE | FIRE SITE | FIRE SITE | FIRE SITE | FIRE SITE |
| SAMPLE NUMBER | LA20502D | LA20502W | LA20503D | LA20503W | LA20504D |
| MEDIA | SOIL | SOIL | SOIL | SOIL | SOIL |
| UNITS | pCi/kgD | pCi/kgW | pCi/kgD | pCi/kgW | pCi/kgD |
| **Alpha Emitters** | | | | | |
| Thorium - 230 | 900 ±300 | na | 1500 ±500 | na | 800 ±400 |
| Thorium - 232[a] | na | <8150 ±660 | na | <11200 ±840 | na |
| Uranium - 234 | na | ---- | na | ---- | na |
| Uranium - 235 | na | 1380 ±110 | na | 600 ±63.0 | na |
| Uranium - 238[a] | na | <7960 ±740 | na | <12030 ±900 | na |
| Uranium - 238[b] | na | 128000 ±10000 | na | 48400 ±5600 | na |
| Uranium (all isotopes)[c] | 260000 ±26000 | na | 124000 ±12400 | na | 7000 ±700 |
| **Gamma Emitters** | | | | | |
| Potassium - 40 | na | 20200 ±1700 | na | 21200 ±1900 | na |
| Cobalt - 56 | na | ---- | na | 29.0 ±20.0 | na |
| Cesium - 137 | na | 121 ±25.0 | na | 244 ±48.0 | na |

a. Total unbroken chain activity in equilibrium.
b. Activity in excess of U238 natural chain.
c. Units are ug (/L, /kgW, or /kgD) instead of pCi (/L, /kgW, or /kgD).
d. This column contains the results of the radiological screening run.

TABLE 4.1.5 LOS ALAMOS NATIONAL LABORATORY - RADIOLOGICAL DATA - ENVIRONMENTAL PROBLEM 1 (Continued)



| | |
|---|---|
| AREA | TA-15-44 |
| LOCATION | ACTIVE F.S. |
| TYPE OF LOCATION | FIRE SITE |
| SAMPLE NUMBER | LA20504W |
| MEDIA | SOIL |
| UNITS | pCi/kgW |
| **Alpha Emitters** | |
| Thorium - 230 | na |
| Thorium - 232[a] | <11240 ±820 |
| Uranium - 234 | ---- |
| Uranium - 235 | 101 ±33.0 |
| Uranium - 238[a] | <11940 ±890 |
| Uranium - 238[b] | ---- |
| Uranium (all isotopes)[c] | na |
| **Gamma Emitters** | |
| Potassium - 40 | 21200 ±1600 |
| Cobalt - 56 | <30.0 |
| Cesium - 137 | 157 ±28.0 |

a. Total unbroken chain activity in equilibrium.
b. Activity in excess of U238 natural chain.
c. Units are ug (/L, /kgW, or /kgD) instead of pCi (/L, /kgW, or /kgD).
d. This column contains the results of the radiological screening run.

(BLANK PAGE)