54

ENTERED

Environment Safety & Health
PO Box 1663, MS K491
Los Alamos, New Mexico 87545
(505) 667-4218/Fax (5005) 665-3811

National Nuclear Security Administration
Los Alamos Field Office, A316
3747 West Jemez Road
Los Alamos, New Mexico, 87545
(505) 667-5105/Fax (505) 667-5948

Date: MAR 09 2015
Symbol: ADESH-15-047
LA-UR: 15-21633
Locates Action No.: U1500738

RECEIVED
MAR - 9 2015
NMED
Hazardous Waste Bureau

Mr. John E. Kieling
Hazardous Waste Bureau
New Mexico Environment Department
2905 Rodeo Park Drive East, Building 1
Santa Fe, NM 87505

Dear Mr. Kieling:

Subject: **Response to February 17, 2015 Request for Information, Management of Nitrate Salt-Bearing Waste, Los Alamos National Laboratory, EPA ID# NM0890010515**

The purpose of this letter is to respond to a request for information, dated February 17, 2015, issued by the New Mexico Environment Department - Hazardous Waste Bureau (NMED-HWB) to the U.S. Department of Energy (DOE) and Los Alamos National Security, LLC (LANS), the Permittees. The letter requests additional information concerning activities associated with nitrate salt-bearing waste containers at Los Alamos National Laboratory (LANL).

Information requested by the NMED-HWB focused on additional information associated with the LANL *Summary of Evaluation and Identification of LANL Nitrate Salt Containers*, most recently provided to the NMED-HWB as Attachment 3 of the *LANL Nitrate Salt-Bearing Waste Container Isolation Plan, Revision 2* on September 19, 2014. Enclosure 1 provides the Permittees response to the NMED-HWB's request for information and the requested documentation.

36962

If you have comments or questions regarding this submittal, please contact Mark P. Haagenstad (LANS) at (505) 665-2014 or Gene E. Turner (DOE) at (505) 667-5794.

Sincerely,

Michael T. Brandt, DrPH, CIH
Associate Director
Environment, Safety & Health

Sincerely,

Peter Maggiore
Assistant Manager
Environmental Projects Office
Los Alamos Field Office
U.S. Department of Energy

MTB:KBL:MPH/lm

Enclosures: (1) Response to February 17, 2015 Request for Information, Management of Nitrate Salt-Bearing Waste, Los Alamos National Laboratory, EPA ID# NM0890010515

Cy: Ryan Flynn, NMED, Santa Fe, NM, (E-File)
Kathryn M. Roberts, NMED, Santa Fe, NM, (E-File)
Steve Pullen, NMED/HWB, Santa Fe, NM, (E-File)
Timothy Hall, NMED/HWB, Santa Fe, NM, (E-File)
Peter Maggiore, NA-LA, (E-File)
Lisa Cummings, NA-LA, (E-File)
David Nickless, NA-LA, (E-File)
Gene E. Turner, NA-LA, (E-File)
Kirsten M. Laskey, NA-LA, (E-File)
Michael A. Lansing, PADOPS, (E-File)
Amy E. De Palma, PADOPS, (E-File)
Randall M. Erickson, ADEP, (E-File)
Enrique Torres, ADEP, (E-File)
Cheryl D. Cabbil, ADNHHO, (E-File)
Michael T. Brandt, ADESH, (E-File)
Raeanna R. Sharp-Geiger, ADESH, (E-File)
Alison M. Dorries, ENV-DO, (E-File)
James S. Clemmons, LTP, (E-File)
Rick A. Alexander, EWMO-DO, (E-File)
Andrew R. Baumer, EWMO-DO, (E-File)
Donald L. Allen, LTP, (E-File)
Scott A. Miller, LTP-WRP, (E-File)
David E. Frederici, LTP-SSS, (E-File)
Selena Z. Sauer, LC-ESH, (E-File)
Kenneth M. Hargis, LTP-PTS, (E-File)
Mark P. Haagenstad, ENV-CP, (E-File)
Deborah L. Guffee, SI-DC, (E-File)
Yvette S. Branch, SI-DC, (E-File)
Luciana Vigil-Holterman, ENV-CP, (E-File)
lasomailbox@nnsa.doe.gov, (E-File)
locatesteam@lanl.gov, (E-File)
env-correspondence@lanl.gov, (E-File)
rcra-prr@lanl.gov, (E-File)

Response to February 17, 2015 Request for Information, Management of Nitrate Salt-Bearing Waste, Los Alamos National Laboratory, EPA ID# NM0890010515

March 9, 2015

ENCLOSURE 1

Response to February 17, 2015 Request for Information, Management of Nitrate Salt-Bearing Waste, Los Alamos National Laboratory, EPA ID# NM0890010515

ADESH-15-047

LA-UR-15-21633

U1500738

Date: MAR 09 2015

Attachment A	Applicable Source Documentation from CCP-AK-LANL-006.
Attachment B	*NCR-LANL-0509-09: Disposition of Forty-Eight (48) Suspected Non-Cemented, Evaporator Salt Containers - DR 36*
Attachment C	*Review of Nitrate Wastes Associated with Plutonium Purification and Recovery Operations at Los Alamos National Laboratory*
Attachment D	Generator Documentation for 35 Unremediated Nitrate Salt-Bearing Waste Containers
Attachment E	Initial Database Query of Potential Nitrate Salt-Bearing Waste Containers
Attachment F	Email Correspondence Confirming 707 Nitrate Salt-Bearing Waste Containers, May 23, 2014
Attachment G	*LA-CIN01.001 Waste Stream Delineation*
Attachment H	Correction of Waste Stream Designation for Three Containers
Attachment I	Revised Inventory of LANL Nitrate Salt Drums

Response to February 17, 2015 Request for Information, Management of Nitrate Salt-Bearing Waste, Los Alamos National Laboratory, EPA ID# NM0890010515

INTRODUCTION

This enclosure responds to the February 17, 2015, New Mexico Environment Department-Hazardous Waste Bureau (NMED-HWB) request for information letter referenced above. The response contains a description of characterization and the identification processes for nitrate salt-bearing waste. Information and documentation deemed responsive to the request that has been previously submitted to the NMED-HWB is also referenced. All information contained within this submittal is accurate to the best of the United States Department of Energy (DOE) and Los Alamos National Security, LLC, (LANS), collectively the Permittees, knowledge as of March 9, 2015. Ongoing internal reviews of waste management activities may produce new information that would be provided to the NMED-HWB by the Permittees.

The NMED-HWB requests are included verbatim in italics to help with review and the responses from the Permittees follow each NMED-HWB request. There are nine attachments to this document. They are generally described as follows:

- Attachment A is a DVD that includes source documents from the Central Characterization Project (CCP) acceptable knowledge (AK) document (CCP-AK-LANL-006) that provide background information on the characterization activities.
- Attachment B consists of the Nonconformance Report (NCR), NCR-LANL-0509-09, issued by the CCP in 2009.
- Attachment C is a document that provides additional information on process locations and time frames for nitrate salt-bearing waste streams.
- Attachment D includes documents that provide the available waste characterization and processing documentation for the remaining 35 nitrate salt-bearing waste containers.
- Attachment E is a printable version of the initial database query conducted to identify nitrate salt-bearing waste containers.
- Attachment F is an email and the associated attachments from LANS personnel to CCP personnel communicating the final list of nitrate salt-bearing waste containers.
- Attachment G includes communications concerning the assessment of 88 waste containers (LA-CIN01) in 2014 regarding their initial designation as nitrate salt-bearing waste containers.
- Attachment H includes communications from CCP personnel to correct the waste stream designation for three containers in the original inventory of Los Alamos National Laboratory (LANL) nitrate salt-bearing waste containers.
- Attachment I consists of a table that presents a revised inventory of LANL nitrate salt-bearing waste containers.

REQUESTS AND RESPONSES

1. *Provide all internal reviews of waste management practices regarding nitrate salt-bearing waste streams from 2006 to present e.g. waste characterization, waste labeling, waste sorting, waste neutralization, the absorption of liquids in the waste, and waste repackaging.*

Response: The information below describes the internal reviews conducted to date by the Permittees that have included nitrate salt-bearing waste streams. To fully respond to this request, the Permittees have summarized the information and documentation that has already been provided to the NMED-HWB. For completeness, information that has been presented in previous submissions is reproduced/summarized in this response with links to the information. It should be noted that data available at the time of the evaluation regarding nitrate salt-bearing waste was used to generate the *Summary of Evaluation and Identification of LANL Nitrate Salt Containers* (Evaluation Summary) that was provided as Attachment 3 of Enclosure 3 on September 19, 2014 (http://permalink.lanl.gov/object/tr?what=info:lanl-repo/eprr/ERID-261850). Additional documentation provided as attachments to this document elaborates on the conclusions stated in the Evaluation Summary as requested in NMED-HWB Request #2.

LANL transuranic (TRU) waste characterization activities that included the uncemented (also called unconsolidated) nitrate salt-bearing wastes were originally related to the *Transuranic Waste Inspectable Storage Project* (TWISP), which involved the retrieval of waste containers under the Settlement Agreement for Compliance Orders NMHWA 93-01, 93-02, 93-03, and 93-04 approved by the NMED-HWB on December 10, 1993. The Permittees compiled extensive waste characterization information for the waste analysis plan prepared for the TWISP permit modification in 1994 as well as the permit applications submitted for the LANL Permit renewal (1999-2003). Documentation of the identification and classification process for TRU waste and generation of the TRU waste database is included in a January 1994 response to a Notice of Deficiency issued by the NMED-HWB on December 20, 1993 (Administrative Record #11316). The TWISP project occurred concurrently with two major initiatives to recharacterize the LANL mixed transuranic (MTRU) waste inventory for purposes of eventual Waste Isolation Pilot Plant (WIPP) disposal. These were the LANL TRU Waste Characterization Project (TWCP) in the late 1990s, and its successor, CCP, in the early 2000s. The results of the TWCP characterization effort were compiled in the *Los Alamos National Laboratory Transuranic Waste Characterization Sampling Plan* (TWCP-PLAN-0.2.7-001,R.0). This plan, transmitted to the NMED-HWB on August 13, 2014 (Enclosure 4; http://permalink.lanl.gov/object/tr?what=info:lanl-repo/eprr/ERID-260195), details the waste characterization process for the "TA-55-34" and "TA-55-38" waste streams that cover the nitrate salt waste parent containers (267 parent containers) outlined in the Evaluation Summary. These waste streams are referenced in a table that included a complete list of all 707 nitrate salt-bearing waste containers with relevant waste stream and location information that was submitted to the NMED-HWB on July 9, 2014 and corrected on July 17, 2014 (http://permalink.lanl.gov/object/tr?what=info:lanl-repo/eprr/ERID-259138).

Characterization efforts between the Permittees and CCP from 2004-2014 are summarized in the *CCP-AK-LANL-006: Central Characterization Program Acceptable Knowledge Summary Report for Los Alamos National Laboratory TA-55 Mixed Transuranic Waste; Waste Streams: LA-MHD01.001, LA-CIN01.001, LA-MIN02-V.001, LA-MIN04-S.001* (Enclosure 5; http://permalink.lanl.gov/object/tr?what=info:lanl-repo/eprr/ERID-260195). Revisions to the AK document from 2004-2014 are described within the document. Specific source documents referenced in the CCP-AK-LANL-006 are provided on the DVD in Attachment A to this submittal. The source documents provided in Attachment A describe the "internal reviews of waste management practices" that were conducted for waste characterization, waste labeling, waste sorting, waste neutralization, absorption of liquids in waste, and/or waste repackaging

activities. Other source documents referenced within CCP-AK-LANL-006 will be provided at the request of the NMED-HWB.

In June 2009, CCP issued an NCR (NCR-LANL-0509-09, provided in Attachment B) that placed a processing hold on approximately 48 nitrate salt-bearing waste drums. The NCR identified new information from the generator (the Permittees) suggesting that these drums were potentially uncemented evaporator salts and would require re-assignment to a separate waste stream. As a result, LANL convened a team from September 2011 to February 2012 to reevaluate the nitrate salts waste characterization information compiled to date. The team reviewed the information in the LANL waste databases and reviewed copies of the original data packages (as available) for the containers. Interviews were conducted with subject matter experts (SMEs) and technical personnel involved with the original waste generation as well as, SMEs with expertise regarding the chemical and physical properties of uncemented nitrate salts. Documentation of these characterization activities is outlined in a February 2012 internal memorandum that was submitted to the NMED-HWB on November 12, 2014 (http://permalink.lanl.gov/object/tr?what=info:lanl-repo/eprr/ESHID-600028).

From January 2012 to May 2012, the Permittees also focused on an effort to identify the Technical Area (TA) 55 TRU waste containers determined to be consistent with the characterization outlined in NCR-LANL-0509-09 because the nitrate salts were not originally identified as a discrete waste stream in historical LANL TRU waste databases. The Permittees, through careful evaluation, verified which drums in the LANL legacy TRU waste population were, in fact, uncemented nitrate salts that originated from evaporator bottoms. The Evaluation Summary document includes a description of that effort. It is discussed further in the Permittees' response to NMED-HWB Request #2. Attachment C includes the document, *Review of Nitrate Wastes Associated with Plutonium Purification and Recovery Operations at Los Alamos National Laboratory*, which provides summary descriptions of LANL plutonium nitrate operations over time, as well as process changes, methods of waste generation, and modes of storage and disposition.

In July 2012, *Solution Package Definitions Report-72, Salt Waste*, Rev. 1 was issued (Attachment 1 of Enclosure 1; http://permalink.lanl.gov/object/tr?what=info:lanl-repo/eprr/ERID-262519). The waste disposition path for the nitrate salt-bearing wastes and the identified population of legacy waste containers at TA-54 that were potentially uncemented nitrate salts as of May 14, 2012 were included in the solution package. The solution package also documents Environmental Protection Agency (EPA) Hazardous Waste Numbers determined to be applicable to the population. In the package it is stated that each container would be verified individually by CCP during container certification prior to shipment to WIPP and would be re-assigned to another appropriate AK waste stream if found not to be uncemented nitrate salts. As stated in the solution package, the nitrate salts waste containers would be relabeled with the applicable EPA Hazardous Waste Numbers (if acceptable under the WIPP permit) when re-packaging the remediated waste at the TA-50 Waste Characterization, Reduction and Repackaging Facility (WCRRF) for subsequent shipment to the WIPP.

Remediation activities on parent nitrate salt-bearing containers were conducted on October 20, 2011 and from January 2012 to April 2014. Documentation for each of the remediated nitrate salt-bearing waste containers was provided to the NMED-HWB in 22 separate submittals. The submittals included safety evaluations for each parent waste container documenting potential hazards during the remediation process, the original generator information on the contents of the

waste container, and documentation of Real-Time Radiography (RTR), flammable gas analysis, and nondestructive assay performed on each parent container. Available generator information for the 29 unremediated nitrate salt waste containers still located at LANL and the 6 containers that did not require remediation prior to shipment off-site is located in Attachment D of this document. Additionally, RTR videos for 705 of the 707 nitrate salt-bearing waste containers were submitted to the NMED-HWB. Forms that document the RTR activity for the remaining two containers were provided because video was not available. The documentation can be found at:

Date Submitted	**Title**	**Location**
8/7/2014	Package 1	http://permalink.lanl.gov/object/tr?what=info:lanl-repo/eprr/ERID-260170
8/14/2014	Package 2	http://permalink.lanl.gov/object/tr?what=info:lanl-repo/eprr/ERID-260198
8/18/2014	Package 3	http://permalink.lanl.gov/object/tr?what=info:lanl-repo/eprr/ERID-260209
8/18/2014	Package 4	http://permalink.lanl.gov/object/tr?what=info:lanl-repo/eprr/ERID-260208
8/21/2014	Package 5	http://permalink.lanl.gov/object/tr?what=info:lanl-repo/eprr/ERID-260229
8/27/2014	Package 6	http://permalink.lanl.gov/object/tr?what=info:lanl-repo/eprr/ERID-260882
8/27/2014	Package 7	http://permalink.lanl.gov/object/tr?what=info:lanl-repo/eprr/ERID-260883
8/28/2014	Package 8	http://permalink.lanl.gov/object/tr?what=info:lanl-repo/eprr/ERID-260893
9/9/2014	Package 9	http://permalink.lanl.gov/object/tr?what=info:lanl-repo/eprr/ERID-260937
9/9/2014	Package 10	http://permalink.lanl.gov/object/tr?what=info:lanl-repo/eprr/ERID-260938
9/4/2014	Package 11	http://permalink.lanl.gov/object/tr?what=info:lanl-repo/eprr/ERID-260904
9/22/2014	Package 12	http://permalink.lanl.gov/object/tr?what=info:lanl-repo/eprr/ERID-262502
9/11/2014	Package 13	http://permalink.lanl.gov/object/tr?what=info:lanl-repo/eprr/ERID-260956
10/1/2014	Package 14	http://permalink.lanl.gov/object/tr?what=info:lanl-repo/eprr/ERID-261909
9/23/2014	Package 15	http://permalink.lanl.gov/object/tr?what=info:lanl-repo/eprr/ERID-262503
10/1/2014	Package 16	http://permalink.lanl.gov/object/tr?what=info:lanl-repo/eprr/ERID-261910
10/16/2014	Package 17	http://permalink.lanl.gov/object/tr?what=info:lanl-repo/eprr/ERID-262509
10/8/2014	Package 18	http://permalink.lanl.gov/object/tr?what=info:lanl-repo/eprr/ERID-262504
10/27/2014	Package 19	http://permalink.lanl.gov/object/tr?what=info:lanl-repo/eprr/ERID-262886
10/23/2014	Package 20	http://permalink.lanl.gov/object/tr?what=info:lanl-repo/eprr/ERID-262529
10/28/2014	Package 21	http://permalink.lanl.gov/object/tr?what=info:lanl-repo/eprr/ERID-262887
11/3/2014	Package 22	http://permalink.lanl.gov/object/tr?what=info:lanl-repo/eprr/ENV-DO-14-0326
9/30/2014	RTR videos	http://permalink.lanl.gov/object/tr?what=info:lanl-repo/eprr/ERID-261912-Att4
9/30/2014	RTR Document-ation forms	Attachment 5 of Enclosure 1; http://permalink.lanl.gov/object/tr?what=info:lanl-repo/eprr/ERID-261912

Date Submitted	Title	Location
Generator documentation for 35 unremediated containers that were shipped off-site without remediation or still located at LANL		Attachment D of this document

Subsequent waste characterization evaluations have led the Permittees to conservatively relabel nitrate salt-bearing waste containers with applicable EPA Hazardous Waste Numbers. The first of which, NMED-HWB was notified of during a phone call on June 3, 2014 when the Permittees apprised the NMED-HWB of recharacterization activities associated with the unremediated nitrate salt-bearing waste containers. In accordance with the May 19, 2014 Administrative Order from the New Mexico Environment Department, daily technical phone calls between the Permittees and NMED-HWB began on June 4, 2014. On June 5, 2014, the unremediated nitrate salt-bearing waste containers located at TA-54 that contained liquids were conservatively labeled with the EPA Hazardous Waste Number for corrosivity (D002). This relabeling was documented in the written submission for that day's technical phone call (http://permalink.lanl.gov/object/tr?what=info:lanl-repo/eprr/ERID-524866).

Further reevaluation resulted in the Permittees conservatively applying the EPA Hazardous Waste Number for the characteristic of ignitability (D001) to the 57 remediated nitrate salt-bearing waste containers and the 29 unremediated nitrate salt-bearing waste containers stored at LANL. Labels with the EPA Hazardous Waste Number D001 were placed on all 86 nitrate salt-bearing waste containers stored at LANL on July 25, 2014 and notified NMED-HWB of this decision on July 30, 2014 (http://permalink.lanl.gov/object/tr?what=info:lanl-repo/eprr/ERID-259155). Details of these specific recharacterization decisions and analytical results were provided in the September 5, 2014 and September 30, 2014 responses to NMED-HWB information requests (http://permalink.lanl.gov/object/tr?what=info:lanl-repo/eprr/ERID-260905 and http://permalink.lanl.gov/object/tr?what=info:lanl-repo/eprr/ERID-261912). Additional analytical data obtained was included on September 19, 2014 as Attachment 1 of the *LANL Nitrate Salt-Bearing Waste Container Isolation Plan, Revision 2* (Attachment 1 of Enclosure 3; http://permalink.lanl.gov/object/tr?what=info:lanl-repo/eprr/ERID-261850). The Permittees also notified the NMED-HWB of ongoing reevaluation efforts that included factual review, scientific analysis, and testing.

Additionally, the Permittees made notifications to the NMED-HWB and off-site facilities [Waste Control Specialists (WCS), in Andrews, Texas and the WIPP] regarding manifest and waste characterization discrepancies that resulted from the application of the additional EPA Hazardous Waste Number D001. Correspondence associated with these notifications was included as Attachment 2 of the *LANL Nitrate Salt-Bearing Waste Container Isolation Plan, Revision 2* (Attachment 2 of Enclosure 3; http://permalink.lanl.gov/object/tr?what=info:lanl-repo/eprr/ERID-261850).

2. *Provide all documentation the Permittees reviewed to reach the conclusions in the Evaluation.*

Response: The "Evaluation Methods" section of the Evaluation Summary document outlines the process initially followed by the Permittees to identify the 267 parent nitrate salt-bearing waste containers listed in the document. The process of evaluation began with a database query for specified generator waste stream identification designations. Several populations of waste containers were eliminated from that initial query because the waste generating processes involved could not have generated a nitrate salt waste. This evaluation process is described in the Evaluation Summary document, and the results of the database query are included as Attachment E. When the evaluation of waste generating processes was complete, the available waste characterization documentation was reviewed as described in the Evaluation Summary document.

All waste characterization and remediation documentation for the 267 parent containers was previously provided as referenced in the Permittees' response to NMED-HWB Request #1, or is included in Attachment D to this document. Other generator documentation, such as Radioactive Solid Waste Disposal Records for the waste containers that were screened out as part of the evaluation process because they were determined to be a waste matrix other than uncemented nitrate salts will be submitted upon request by the NMED-HWB.

Additional information on the processes that have historically generated nitrate wastes is located in Attachment C, *Review of Nitrate Wastes Associated with Plutonium Purification and Recovery Operations at Los Alamos,* to this submittal. Attachment A, Applicable Source Documentation from CCP-AK-LANL-006, provides other supporting documentation for waste characterization that was reviewed by the Permittees and CCP in order to develop the CCP-AK-LANL-006 document.

3. *Provide all documentation that was generated as a result of the Evaluation (e.g., internal memoranda; communication between the Permittees and external organizations, such as the Central Characterization Project ("CCP"), the Waste Isolation Pilot Plan ("WIPP"), and the LANL Carlsbad Office Difficult Waste Team ("DWT").*

Response: Documentation generated as a result of the Evaluation Summary document, including communications between the Permittees and external organizations have been provided or referenced in the Permittees' response to the NMED-HWB Request #1 above. Additional communication between LANS personnel and CCP personnel that documents the identification of 707 nitrate salt-bearing waste containers is included as Attachment F.

4. *Provide all documentation that has been generated as a result of subsequent reviews or evaluations regarding the total number of nitrate salt-bearing waste containers (e.g., internal memoranda; communication between the Permittees and external organizations, such as CCP, WIPP and DWT).*

Response: Recent reviews and discussions between CCP and the Permittees regarding the total number of nitrate salt-bearing waste containers, have led to an agreement to revise the official

inventory of 707 nitrate salt-bearing waste containers and to resolve any resulting manifest and waste characterization discrepancies.

Of the 267 identified parent nitrate salt waste containers, 232 waste containers were remediated into 672 daughter drums and 35 containers remained as parent containers for a total of 707 containers. The official inventory of 707 suspect nitrate salt-bearing waste containers was most recently submitted to the NMED-HWB on July 17, 2014 (http://permalink.lanl.gov/object/tr?what=info:lanl-repo/eprr/ERID-259138). Of the 707 suspect waste containers, 88 LA-MHD01 waste containers were certified/identified as waste stream LA-MHD01 (this designation includes waste containers having greater than 51% debris as a waste matrix). Because these containers were known to contain mostly debris waste, CCP reviewed RTR videos (Attachment 4 of Enclosure 1; http://permalink.lanl.gov/object/tr?what=info:lanl-repo/eprr/ERID-261912-Att4) for all 88 LA-MHD01 containers to determine if these containers included any nitrate salt-bearing waste. It was confirmed through this review that the contents of 9 of the 88 waste containers are debris only and do not include any nitrate salt waste. Therefore, the Permittees propose these 9 containers be removed from the population of 707 suspect nitrate salt-bearing waste containers.

Of the 698 remaining waste containers, 88 LA-CIN01 (this is a designation for cemented waste) suspect waste containers were reevaluated to determine if the waste matrix within each of the containers was in fact cemented. Attachment G, *LA-CIN01.001 Waste Stream Delineation*, of this document contains characterization documentation associated with the review, and supports the removal of the 88 LA-CIN01 containers from the suspected nitrate salt-bearing waste container list. After the generation of the information in Attachment G and further review of the RTR videos, CCP confirmed cementation for these 88 containers and recommended that these containers not carry the EPA Hazardous Waste Number for ignitability (D001). The Permittees concurred with this evaluation, and are proposing that these 88 containers also be removed from the official 707 nitrate salt-bearing waste containers.

During recent reviews and discussions between CCP and the Permittees concerning the inventory transmitted to the NMED-HWB on July 17, 2014, (http://permalink.lanl.gov/object/tr?what=info:lanl-repo/eprr/ERID-259138), three containers on the original inventory were identified as belonging to waste stream LA-MIN04-S.001, when they should have been identified as LA-MIN02-S.001. The waste stream designation for these three containers was changed accordingly and confirmation of this change is documented in Attachment H of this submittal. Attachment I of this submittal includes the corrected designation.

Internal reviews of waste characterization and waste processing continue to be conducted by the Permittees for nitrate salt-bearing waste containers and other waste managed at LANL. During these reviews, in late February 2015, the Permittees identified an additional 4 suspect parent nitrate salt waste containers. Further evaluation of these waste containers revealed that one waste container contained cemented waste and was not an uncemented nitrate salt waste container. The remaining 3 parent containers are considered by the Permittees to be suspect nitrate salt waste containers. The 3 containers were processed at WCRRF and produced a total of 10 daughter containers that are located at WCS, the WIPP, and at LANL. Waste characterization and remediation documentation for these containers will be submitted to the NMED-HWB in the Permittees' response to the February 24, 2015 letter from the NMED-HWB on March 17, 2015.

This recommended removal of 97 containers (9 LA-MHD01 and 88 LA-CIN01) reduces the total population of nitrate salt-bearing waste containers outlined in the Evaluation Summary document from 707 to 610 containers. The addition of 10 suspect nitrate salt-bearing daughter waste containers identified in February 2015 brings the total of nitrate salt-bearing waste containers to 620 containers. A table outlining the changes to be made to the inventory of 707 waste containers is included as Attachment I of this document.

Attachment A

Applicable Source Documentation from CCP-AK-LANL-006

(On DVD)

Attachment A
Applicable Source Documentation from CCP-AK-LANL-006

CCP #	Title/ Author	Document No.	Date	LA-UR
D007	Process Acceptable Knowledge Report for Chloride Operations at TA-55 (multiple copies with markup comments), Los Alamos National Laboratory Transuranic Waste Characterization/ Certification Project (TWCP)		June 21, 2000	LA-UR-004001
D023	Acceptable Knowledge Summary Report for Waste Streams TA-55-19 and TA-55-20, TWCP (multiple copies with markup comments)	TWCP-AK-2.1-008,R.2/IC2	July 26, 2001	LA-UR-01-2486
D025	Project 2010 Acceptable Knowledge Report for Debris Waste Streams Containing Pu-239, TWCP	TWCP-AK-2.1-015, R.3	April 10, 2003	LA-UR-03-2640
D028	Process Acceptable Knowledge Report for Pyrochemical Processes at TA-55, TWCP	TWCP-AK-2.1-006, R.2	May 18, 2001	LA-UR-01-2558
D029	Process Acceptable Knowledge Report for Metal Operations Processes at TA-55, TWCP	TWCP-AK-2.1-003	May 17, 2001	LA-UR-01-2556
D030_D079	Process Acceptable Knowledge Report for Special Processing at TA-55, TWCP	TWCP-AK-2.1-007, R.2	May 18, 2001	LA-UR-01-2560
D032_D077	Process Acceptable Knowledge Report for Miscellaneous Operations at TA-55, TWCP	TWCP-AK-2.1-004,R.2	May 17, 2001	LA-UR-01-2559
D036	Process Acceptable Knowledge Report for Nitrate Operations at TA-55, TWCP (multiple copies with markup comments)	TWCP-AK-2.1-005,R.2	May 17, 2001	LA-UR-01-2555
D048	Wastes From Plutonium Conversion and Scrap Recovery Operations, D.C. Christensen et al.	LA-11069-MS	March 1988	LA-UR-004835
D076	Acceptable Knowledge Summary Report for Waste Streams TA-55-43, TA-55-44, TA-55-45, TA-55-46, TA-55-47, TWCP	TWCP-AK-2.1-011,R.0/IC1	November 5, 2001	LA-UR-01-4964
D080	Process Acceptable Knowledge Report for Plutonium-238	TWCP-AK-	August 7,	LA-UR-01-4200

CCP #	Title/ Author	Document No.	Date	LA-UR
	Operations at TA-55, TWCP	2.1-009,R0	2001	
DR036_SD	Acceptable Knowledge Source Document Discrepancy Resolution, LANL List of 291 Nitrate Salt Containers, NCR-LANL-0509-09, R.0, AK6 DR036, R. Fitzgerald (CCP)	NCR-LANL-0509-09, R.0, AK6 DR036, Attach. 1	January 22, 2013	

Attachment A

Applicable Source Documentation from CCP-AK-LANL-006

(On DVD)

Attachment A
Applicable Source Documentation from CCP-AK-LANL-006

CCP #	Title/ Author	Document No.	Date	LA-UR
D007	Process Acceptable Knowledge Report for Chloride Operations at TA-55 (multiple copies with markup comments), Los Alamos National Laboratory Transuranic Waste Characterization/ Certification Project (TWCP)		June 21, 2000	LA-UR-004001
D023	Acceptable Knowledge Summary Report for Waste Streams TA-55-19 and TA-55-20, TWCP (multiple copies with markup comments)	TWCP-AK-2.1-008,R.2/IC2	July 26, 2001	LA-UR-01-2486
D025	Project 2010 Acceptable Knowledge Report for Debris Waste Streams Containing Pu-239, TWCP	TWCP-AK-2.1-015, R.3	April 10, 2003	LA-UR-03-2640
D028	Process Acceptable Knowledge Report for Pyrochemical Processes at TA-55, TWCP	TWCP-AK-2.1-006, R.2	May 18, 2001	LA-UR-01-2558
D029	Process Acceptable Knowledge Report for Metal Operations Processes at TA-55, TWCP	TWCP-AK-2.1-003	May 17, 2001	LA-UR-01-2556
D030_D079	Process Acceptable Knowledge Report for Special Processing at TA-55, TWCP	TWCP-AK-2.1-007, R.2	May 18, 2001	LA-UR-01-2560
D032_D077	Process Acceptable Knowledge Report for Miscellaneous Operations at TA-55, TWCP	TWCP-AK-2.1-004,R.2	May 17, 2001	LA-UR-01-2559
D036	Process Acceptable Knowledge Report for Nitrate Operations at TA-55, TWCP (multiple copies with markup comments)	TWCP-AK-2.1-005,R.2	May 17, 2001	LA-UR-01-2555
D048	Wastes From Plutonium Conversion and Scrap Recovery Operations, D.C. Christensen et al.	LA-11069-MS	March 1988	LA-UR-004835
D076	Acceptable Knowledge Summary Report for Waste Streams TA-55-43, TA-55-44, TA-55-45, TA-55-46, TA-55-47, TWCP	TWCP-AK-2.1-011,R.0/IC1	November 5, 2001	LA-UR-01-4964
D080	Process Acceptable Knowledge Report for Plutonium-238	TWCP-AK-	August 7,	LA-UR-01-4200

CCP #	Title/ Author	Document No.	Date	LA-UR
	Operations at TA-55, TWCP	2.1-009,R0	2001	
DR036_SD	Acceptable Knowledge Source Document Discrepancy Resolution, LANL List of 291 Nitrate Salt Containers, NCR-LANL-0509-09, R.0, AK6 DR036, R. Fitzgerald (CCP)	NCR-LANL-0509-09, R.0, AK6 DR036, Attach. 1	January 22, 2013	

TWCP-QP-1.1-004,R.6/IC1
Effective Date: 08/23/00

TWCP-03937

RECORDS SUBMITTAL

INSTRUCTIONS: This form is prepared by the record source when submitting individual records, batch data reports, or a records package to the RMDC. For records packages, a Table of Contents (TOC) must also be submitted. Each record submitted requires a complete form.

MANDATORY: ✓ To the best of my knowledge, the record(s) have no radioactive contamination.
Signature: John Musgrave

RECORD SOURCE:
X TWCP ___ WCRRF ___ RAMROD ___ RANT ___ Group
Other: ___

Submittal Date: 9/22/00 Z-Number: 102484 Name/Org.: JOHN MUSGRAVE/C-11

Originator: ROSEMARY GLENN Organization: JOHN HART & ASSOCIATES

TYPE OF RECORD/ACTION TO BE TAKEN

X Individual Record ___ Batch data report ___ Records Package (+ TOC)

X New ___ Revision* ___ Addition* ___ Supersedes*

* Record Barcode Number: ___ *Review Cycle (if applicable): ___ Yes ___ No ___ N/A

RECORD ID NUMBER: (e.g., memo symbol number, procedure (include revision), deficiency number, batch data report number, unique record identifier if applicable): LA-UR-004001

RECORD DATE: 6/21/00 **PHYSICAL PAGE COUNT:** ~~24~~ 66 9/22/00 X **SINGLE SIDED** ___ **DOUBLE SIDED**

WBS Number: 2.1 **Category Number: (page two)** 07

RECORD TITLE, SUBJECT, AND/OR KEYWORDS:
Process Acceptable Knowledge (AK) Report for Chloride Operations at TA-55 LA-UR-04001

RECORD CENTER USE ONLY

✓ Accepted Date: 9/22/00 ___ Return Date: ___

Signature: [illegible] Resubmitted: ___
RIDs Type: LT

Scan Date: ___ **By:** ___ **QC Date:** ___ **By:** ___

(Subject to change prior to scheduled review cycle).

Los Alamos National Laboratory
Transuranic Waste Characterization/Certification Project

PROCESS ACCEPTABLE KNOWLEDGE REPORT FOR CHLORIDE OPERATIONS AT TA-55

LA-UR 004001

Date: June 21, 2000

Waste Generated from Process/Status Codes:

CLRD, CL, CX, CS, CSE, SE, CLS, CW, MB, MS,
CXL, PRR, PUB, PB, and CC (jointly with nitrate)

Pamela Rogers Site Project Manager (Print Name)	Pamela Rogers Signature	9/18/00 Date
M A Gavett Site Project QA Officer (Print Name)	M A Gavett Signature	9/19/00 Date
Rosemary T. Glenn Preparer (Print Name)	Rosemary T. Glenn Signature	9-13-00 Date
Matt J. Riggs Waste Certification Official (Print Name)	Matt J. Riggs Signature	9/19/00 Date
Charles L. Foxx Facility Representative (Print Name)	Charles L. Foxx Signature	9/21/00 Date

CONTENTS

Section **Page**

ACRONYMS iii

INTRODUCTION 1

1.0 METHODOLOGY OF AK INFORMATION SEARCH 1

2.0 DESCRIPTION OF CHLORIDE OPERATIONS PROCESSES 1
- 2.1 Facility and Mission 1
- 2.2 Waste Physical Form and Content Description 1
- 2.3 Waste Volume and Time Period of Generation 2
- 2.4 Waste Stream Generation Process 2
  - 2.4.1 Overview 2
  - 2.4.2 Process Descriptions 2
  - 2.4.3 Process Flow Diagrams 5
- 2.5 Material Inputs to the Waste Generation Process 5
  - 2.5.1 Physical Waste Form Identification 5
  - 2.5.2 Radionuclide Content Identification 5
  - 2.5.3 Chemical Content Identification 6

3.0 ASSIGNMENT OF EPA HAZARDOUS WASTE NUMBERS 6
- 3.1 F, K, and P Listings 6
- 3.2 Toxicity 6
- 3.3 Corrosivity, Reactivity, and Ignitability 6

4.0 VERIFICATION THAT IGNITABLE, REACTIVE AND CORROSIVE WASTES WERE EXCLUDED 6

5.0 VERIFICATION THAT INCOMPATIBLE CHEMICALS WERE PROHIBITED 6

6.0 VERIFICATION THAT THERE ARE NO COMPRESSED GASES, FREE LIQUIDS, NONRADIONUCLIDE PYROPHORICS, SEALED CONTAINERS GREATER THAN FOUR LITERS IN VOLUME, NOR >1% RADIONUCLIDE PYROPHORICS 7

7.0 VERIFICATION THAT THERE ARE NO POLYCHLORINATED BIPHENYLS (PCBs) 7

8.0 DETERMINATION OF THE RADIONUCLIDE ISOTOPIC COMPOSITION 7

9.0 PACKAGING 7

Attachments

1 Acceptable Knowledge Summary (1 page)

2 Time Lines—Chloride Operations (1 page)

3 Acceptable Knowledge Roadmap (3 pages)

4 Map of TA-55 (1 page)

5 Process Input/Output Table and List of Feed Materials (6 pages)

6 Simplified Schematic of Chloride Line (1 page)

ACRONYMS

AK	acceptable knowledge
CFR	*Code of Federal Regulations*
DOE	U.S. Department of Energy
EPA	U.S. Environmental Protection Agency
LANL	Los Alamos National Laboratory
PAFD	process accountability flow diagram
PCB	polychorinated biphenyl
P/S [code]	process/status [code]
RCRA	Resource Conservation and Recovery Act
RMDC	Records Management/Document Control
Sampling Plan	*Los Alamos National Laboratory Transuranic Waste Characterization Sampling Plan* (TWCP-PLAN-0.2.7-001)
SAR	safety analysis report
SOP	safe operating procedure
TA	technical area
TRU	transuranic
TWCP	Transuranic Waste Characterization/Certification Project
WAC	waste acceptance criteria
WIPP	Waste Isolation Pilot Plant
WIPP WAC	*Waste Acceptance Criteria for the Waste Isolation Pilot Plant* (DOE/WIPP-069)
WIPP WAP	Attachment B, Waste Analysis Plan, to the *Hazardous Waste Facility Permit Issued to the Waste Isolation Pilot Plant* (EPA No. NM4890139088)
WODF	Waste Origination and Disposition Form

DRAFT PROCESS ACCEPTABLE KNOWLEDGE REPORT CHLORIDE OPERATIONS AT TA-55

INTRODUCTION

All transuranic (TRU) waste must be sufficiently characterized and certified before it is shipped to the Waste Isolation Pilot Plan (WIPP). The U.S. Environmental Protection Agency (EPA) allows use of acceptable knowledge (AK) for waste characterization. EPA uses the term AK in its guidance document, *Waste Analysis at Facilities that Generate, Treat, Store and Dispose of Hazardous Waste*. Attachment B, Waste Analysis Plan, to the *Hazardous Waste Facility Permit Issued to the Waste Isolation Pilot Plant* (EPA No. NM4890139088) (WIPP WAP) defines AK and provides guidelines on how AK should be obtained and documented.

1.0 METHODOLOGY OF AK INFORMATION SEARCH

The AK search for the information related to waste streams resulting from chloride operations covered:

- Review of the *Los Alamos National Laboratory Transuranic Waste Characterization Sampling Plan* (Cl-1/TWCP-PLAN-0.2.7-001,R.2) (Sampling Plan) that includes information regarding all waste streams

- Review of documents related to the waste generation and waste management activities at TA-55 as listed on the Acceptable Knowledge Roadmap (Attachment 3) (safety analysis reports [SARs], safe operating procedures [SOPs], reports, memos, etc.) (Cl-6 through Cl-22 [all in TWCP-3547])

- Interviews with personnel involved with waste generation and waste management at TA-55 as listed on the Acceptable Knowledge Roadmap (Cl-23 through Cl-27 [all in TWCP-3547])

- Analysis of processes generating waste, including in-process sampling and testing.

The Transuranic Waste Characterization/Certification Project (TWCP) Records Management/Document Control (RMDC) Center contains copies of the documents referenced in this report.

2.0 DESCRIPTION OF CHLORIDE OPERATIONS PROCESSES

The following sections describe chloride operations processes, and identify the resulting wastes as well as outputs that are sent to other operations, such as nitrate operations, for further processing.

2.1 Facility and Mission

The Technical Area (TA)-55 Plutonium Reprocessing facility processes plutonium from residues generated through the defense complex into pure plutonium feedstock. The waste streams generated at the TA-55 Plutonium Reprocessing facility as waste from chloride process operations to reprocess/recover plutonium are entirely defense related (Cl-3/TWCP-614). These waste streams were generated at building PF-4 of the TA-55 plutonium facility. A map of the TA-55 facility is attached to this report (Attachment 4).

2.2 Waste Physical Form and Content Description

Wastes generated during chloride operations, primarily debris wastes and wastes entered into the cement fixation process, are covered by this Draft Process Acceptable Knowledge Report for Chloride Operations

at TA-55. They are identified by having the process status codes for chloride operations: CLRD, CL, CX, CS, CSE, SE, CLS, CW, MB, MS, CXL, PRR, PUB, and PB; CC applies to both chloride and nitrate operations. General debris waste categories include

- Cellulose-based waste (for example, paper, cloth)
- Plastic-based waste (for example, gloves, tape)
- Rubber
- Metal debris (for example, wire, hose clamps, tools)
- Glass debris
- Steel packaging materials

These debris items are contaminated with small amounts of material from chloride operations.

2.3 Waste Volume and Time Period of Generation

This report covers waste streams generated from 1982, when the chloride line was first developed, to the present. Wastes generated in the chloride operations have process/status (P/S) codes CLRD, CL, CX, CS, CSE, SE, CLS, CW, MB, MS, CXL, PRR, PUB, and PB; CC applies to both chloride operations and nitrate operations. Wastes from the chloride operations have different associated Resource Conservation and Recovery Act (RCRA) codes depending on the time period they were generated. The P/S codes, their time period of generation, and corresponding RCRA codes are shown graphically in Attachment 2, Time Lines—Chloride Operations.

Waste volumes for each P/S code have not been tracked. Instead, waste items are segregated into similar material types and packaged in waste containers. Waste containers are segregated into waste streams in the Sampling Plan, and waste stream volumes are reported in that document.

2.4 Waste Stream Generation Process

The following sections describe the generation of waste streams as well as outputs to the nitrate operation.

2.4.1 Overview

Manufacturing and research operations performed at TA-55 in the production of plutonium result in the production of plutonium-contaminated scrap and residues. These residues are processed to recover as much plutonium as is practical (Cl-2/TWCP-352). TA-55 has extensive capabilities for the extraction and recovery of plutonium from residues and scraps generated from operations at various Los Alamos National Laboratory (LANL) facilities and other U.S. Department of Energy (DOE) sites. These recovery operations, as well as associated maintenance operations, and TA-55 plutonium research are the sources of TRU waste generated at TA-55.

2.4.2 Process Descriptions

Detailed information about the TA-55 plutonium recovery processes can be found in *Waste from Plutonium Conversion and Scrap Recovery Operations* (Cl-2/TWCP-352). In general, TA-55 plutonium recovery processes can be divided into three major process lines:

- Aqueous chloride-based processes
- Aqueous nitrate-based processes
- Pyrochemical operations

This report concerns only the first of these, the aqueous chloride-based process line.

The primary feed sources for the chloride processes are plutonium residues from pyrochemical operations, metal preparation, metal fabrication, analytical laboratory operations (see below), and residues from other DOE facilities. The overall goal of the chloride operations is to recover plutonium from scrap and residues and produce a purified plutonium oxide for conversion to metal.

As mentioned above, analytical laboratory operations are one feed into the chloride operations. Samples from the various stages of the production of plutonium are sent for chemical (e.g., radiochemical) analyses. After analysis, excess samples that are either an intermediate or direct product having considerable value, and sample residues rich in plutonium, are returned to TA-55 as feedstock for the production of plutonium metals and oxides. The solvents used in some of the analytical analyses do not carry over an RCRA F listing designation because the sample residues are not a solid waste and are considered feedstock.

Chloride operations can be broken down into the following process steps:

- Pretreatment
- Dissolution
- Purification
- Hydroxide Precipitation

Each of these process steps is described below. A complete listing of P/S codes, their descriptions, and their inputs and outputs is found in Attachment 5, along with a list of feed materials into the chloride process. A simplified schematic diagram of chloride operations is found in Attachment 6.

2.4.2.1 Pretreatment (P/S codes CR, PB, PUB)

Pretreatment includes primarily physical processes used to prepare scrap and residues for dissolution. Pretreatment may include sorting, crushing, and/or pulverizing (P/S code CR; see *Process Acceptable Knowledge Report for Nitrate Operations at TA-55* [TWCP-3940]). As materials are received from various areas in TA-55, they are sorted and sent to various other pretreatment processes or directly to dissolution, depending on the physical nature of the scrap or residue, and the amount and type of plutonium associated with the material.

A separate pretreatment procedure is the decladding of plutonium-beryllium sources (P/S codes PB, PUB; Cl-14/TWCP-3547, Cl-20/TWCP-3547, Cl-21/TWCP-3547). The metal is removed from the sources, and is placed into containers with metal from all other PF-4 operations (the metals waste stream; not a chloride operations waste). The Pu-Be sources, after the cladding has been removed, are entered into the chloride line for plutonium recovery along with other materials. The P/S code for the decladding and processing of the Pu-Be sources in the chloride line was PB prior to 1988, and PUB from 1988 to the present.

2.4.2.2 Dissolution (P/S codes CLRD, CX, CXL, CL, LD, CLS)

In general, the dissolution step can be described as the use of hydrochloric acid to leach and dissolve plutonium from scrap, crucibles, residues, and various solutions, including solutions from the analytical chemistry laboratory known at different times as CHM-1, CLS-1, CST-1, and NMT-1. The scrap and residues may include lead, cadmium, mercury, and chromium from feed materials (see Attachment 5), as

well as from the stainless steel and shielding used in the chloride operations equipment (Cl-27/TWCP-3547).

The chloride line was developed in 1982, and operated under P/S code CLRD until 1984; as P/S code CX (along with other more feed-specific codes described below) until 1994; and as P/S code CXL from 1994 to the present.

NOTE: After dissolution, if a plutonium-containing solution contained too much iron for the solvent extraction process, it went to +3 ion exchange (not to be confused with the +4 ion exchange as a part of purification) as an intermediate step prior to entering the purification phases of chloride operations.

Some P/S codes were used for dissolution of specific feed materials. CL, used from 1985 to 1990, applied to crucible leaching in HCl. LD, used from 1988 to 1992, applied to the dissolution step for most materials but specifically excluded solutions from the analytical laboratory (CLS-1, etc.). P/S codes MB and MS, 1985–1990, were used for molten salts/pyrochemical salts dissolution only. CLS was used when solutions from the analytical laboratory were the only feed material.

Waste solids from HCl dissolution generally went to cement fixation, but on occasions to debris waste (Cl-26/TWCP-3547). Since analyses have not been performed on these wastes, all are required to carry the RCRA codes for cadmium (D006), chromium (D007), lead (D008), and mercury (D009), due to the presence of these metals in the feedstock and equipment.

2.4.2.3 Purification (P/S codes CX, CS, CSE, SE, CL, CLS, MB, MS, PRR, PB, and PUB)

The purification steps in the chloride line may include solvent extraction, ion exchange, and oxalate precipitation, depending on the chemical nature of the solutions to be purified.

Solvent extraction (P/S codes CSE and SE) has been used in the chloride line since 1985 (Cl-26/TWCP-3547, Cl-27/TWCP-3547). The RCRA-regulated solvent, tetrachloroethylene (F002), was used in the solvent extraction process until 1992. Debris waste from the solvent extraction process up until 1992 therefore carries the EPA code F002, as do liquid wastes absorbed in vermiculite. However, pieces left after filtration in the hydrochloric acid dissolution step are removed from the line prior to solvent extraction, so do not carry the F002 designation (see Attachment 6, Simplified Schematic of the Chloride Line).

Silver nitrate titration was used to determine chloride concentration (also resulting in formation of potassium chromate) in both the solvent extraction and ion exchange processes up until 1992, so the RCRA codes D011 and D006 are applied to all wastes during this time period.

The chloride line was halted from 1992 until 1994. When it resumed operation, non-RCRA-regulated solvents replaced the TCE used in solvent extraction, and silver nitrate titration was no longer performed. P/S code CXL was initiated to denote the newly operational chloride line.

During the operation of the chloride line, some leaching of chromium from the stainless steel equipment, and lead and cadmium from shielding, always occurs, and mercury (from feed materials) is present as well (Cl-27/TWCP-3547). These metals concentrate in the cement-fixated waste from chloride operations, and when analyses have been run on these wastes, they were over RCRA limits (Cl-27/TWCP-3547). Since analyses for these metals have not been performed on debris waste, they are also required to carry the above RCRA codes.

Ion exchange columns (+3 and +4) are used to collect plutonium and separate out impurities such as americium and uranium (P/S codes CX, CXL, and PRR). When discarded, the resins carry the EPA codes D006-D009 for the cadmium, chromium, lead, mercury, and prior to 1994, D011 for silver.

The enriched plutonium solutions from solvent extraction or ion exchange are treated with oxalic acid (oxalate precipitation) (P/S codes CS, CSE, CX, CXL, PB, PUB, and SE), and the resulting plutonium precipitate goes to be calcined (P/S code CC) and eventually to the vault. The liquid solution goes to hydroxide precipitation.

2.4.2.4 Hydroxide Precipitation (P/S codes CLS, CW, PRR)

In this step, the solutions from purification steps are precipitated with potassium, magnesium, or sodium hydroxide. The resulting enriched cakes (greater than economic discard level) go to nitrate operations for further processing (see Time Lines in Attachment 2 for P/S codes and corresponding RCRA codes). The hydroxide cake (lower than economic discard level) fines were cemented until 1995, with large chunks of hydroxide filtrate cakes (lower than economic discard level) placed into containers for disposal. Based on a revision to the *Waste Acceptance Criteria for the Waste Isolation Pilot Plant* (DOE/WIPP-069) (WIPP WAC) in 1995, all cake material lower than a revised economic discard level is containerized for disposal as debris waste. Waste caustic liquid meeting the TA-50 waste acceptance criteria (WAC) is disposed through the caustic waste line. P/S code CW was used from 1985 to 1992 for feed materials specifically containing analytical laboratory (CLS-1, etc.) solutions as feed material. Occasionally, solutions from hydroxide precipitation are returned to HCl dissolution for reprocessing (see Attachment 6); RCRA code assignments would then be reflected through other P/S codes.

2.4.3 Process Flow Diagrams

A simplified process flow diagram of the TA-55 chloride operations is included as Attachment 6 to this report. Individual process accountability flow diagrams (PAFDs) for the chloride P/S codes are included in the procedures referenced in the AK Roadmap found in Attachment 3.

2.5 Material Inputs to the Waste Generation Process

The material inputs to waste from chloride operations are described below.

2.5.1 Physical Waste Form Identification

Since items from several different processes are usually combined into one waste drum, the physical waste form of each drum must be determined independently. The physical description of each waste item generated is documented on a Waste Origination and Disposition Form (WODF) by the waste generator according to controlled procedures. The P/S code for each waste item is also documented on this form.

For chloride operations, waste consists primarily of debris and cemented waste.

2.5.2 Radionuclide Content Identification

The primary plutonium material type inputs for chloride operations at TA-55 are listed in reference Cl-4/TWCP-698. The material type provides the major radionuclide components of the waste and yields an estimated Am-241 content by calculation. However, some of the plutonium recovery processes separate plutonium and americium, so that their ratios may be altered in the outputs from the processes. According to reference CL-5/TWCP-882, waste items from P/S code CXL may be either depleted or enriched in americium depending on whether the source of contamination is the process product or the

process residues; however, in general, the waste will be enriched in americium (Cl-26/ TWCP-3547). Individual waste packages undergo gamma spectroscopy to provide detailed radionuclide characterization information.

2.5.3 Chemical Content Identification

The chemical content of waste from the chloride processes is in the form of debris waste, cemented waste, or occasionally pieces of hydroxide cake, which consist primarily of salts such as potassium chloride, sodium chloride, and calcium chloride and are entered into the cement fixation process or debris waste (Cl-26/TWCP-3547). In addition, caustic solutions from hydroxide precipitation are discarded through the waste line to TA-50. A table listing all P/S codes, their descriptions, and their inputs/outputs is provided in Attachment 5.

3.0 ASSIGNMENT OF EPA HAZARDOUS WASTE NUMBERS

The assignment of EPA hazardous waste codes is described below.

3.1 F, K, and P Listings

As described in Sections 2.3 and 2.4 of this report, the F002 code is assigned only to debris waste and waste absorbed in vermiculite from the solvent extraction process, up until 1992. After 1994, no F coded waste resulted from chloride operations. No K or P codes are assigned to chloride operations waste.

3.2 Toxicity

As outlined in Section 2.3 and 2.4 of this report, all waste from the chloride line from 1982 through 1992 are assigned the toxicity characteristic codes D006, D007, D008, D009, and D011 for cadmium, chromium, lead, mercury, and silver. After 1992, the code for silver (D011) was removed from the waste due to a process change (Cl-23/TWCP-3547).

3.3 Corrosivity, Reactivity, and Ignitability

See Section 4.0.

4.0 VERIFICATION THAT IGNITABLE, REACTIVE, AND CORROSIVE WASTES WERE EXCLUDED

See Section 5.0.

5.0 VERIFICATION THAT INCOMPATIBLE CHEMICALS WERE PROHIBITED

All waste containers shipped from TA-55 to TA-54 for storage were evaluated for potentially incompatible chemicals per 49 *Code of Federal Regulations* (CFR) Section 177.848, and were determined to be in compliance with this requirement.

In addition, since 1987, waste generators sign a statement on the WODF stating that the waste contains "no free liquids, pyrophorics, explosives, compressed gases, powders, or materials other than the indicated matrix."

Also, the Waste Profile Request Forms (used after 1991) include statements that the waste related to chloride operations is not ignitable (flash point >200 F), reactive, or corrosive (not applicable for solid [physical form] waste).

6.0 VERIFICATION THAT THERE ARE NO COMPRESSED GASES, FREE LIQUIDS, NONRADIONUCLIDE PYROPHORICS, SEALED CONTAINERS GREATER THAN 4 L IN VOLUME, NOR >1% RADIONUCLIDE PYROPHORICS

Verification that individual waste drums do not contain compressed gases, free liquids, or sealed containers greater than 4 L in volume must be obtained from radiography. For pyrophorics, see Section 5.0.

7.0 VERIFICATION THAT THERE ARE NO POLYCHLORINATED BIPHENYLS (PCBs)

No PCBs were introduced into the chloride operations, as documented in the TA-55 procedures.

8.0 DETERMINATION OF THE RADIONUCLIDE ISOTOPIC COMPOSITION

See Section 2.5.2.

9.0 PACKAGING

Waste packaging information will be addressed in a separate report. The waste packaging report will describe packaging configurations, packaging materials, layers of confinement, and types of inner-layer closure. The report will summarize waste packaging operations applicable to all processes at TA-55.

ACCEPTABLE KNOWLEDGE SUMMARY

P/S Codes: CLRD, CL, CX, CS, CSE, SE, CLS, CW, MB, MS, CXL, PRR, PUB, PB, and CC (jointly with nitrate)

Site: LANL

Facility Mission (including defense and non-defense programs):

The TA-55 Plutonium Reprocessing facility processed Pu-239 from residues generated throughout the defense complex into pure plutonium feedstock. The waste streams from P/S codes CLRD, CL, CX, CS, CSE, SE, CLS, CW, MB, MS, CXL, PRR, PUB, PB, and CC (jointly with nitrate) were generated at the TA-55 Plutonium Reprocessing facility from chloride operations for plutonium recovery and purification.

Description of the waste stream:

Waste from chloride operations consists primarily of debris waste, including cellulose-based waste, plastic-based waste, rubber, metal debris, glass debris, and steel packaging materials, and waste sent for cement fixation.

Area(s) or building(s) where the waste stream was generated (including operations carried out in those areas):

Chloride operations wastes are generated at the PF-4 wing, Room 420, of the TA-55 plutonium facility. Manufacturing and research operations performed at TA-55 in the production of plutonium result in the production of plutonium-contaminated scrap and residues. These residues are processed to recover as much plutonium as is practical. TA-55 has extensive capabilities for the extraction and recovery of plutonium from residues and scraps generated from operations at various LANL facilities and other DOE sites. These recovery operations, as well as associated maintenance operations, and TA-55 plutonium research are the sources of TRU waste generated at TA-55.

Waste stream volume and time period of generation:

Waste volumes for each P/S code have not been tracked. Instead, waste items are segregated into similar material types and packaged in waste containers. Waste containers are segregated into waste streams in the Sampling Plan, and waste stream volumes are reported in that document. The time period of waste generation for chloride operations is from 1982 to the present.

Waste generating processes and material inputs:

The primary feed sources for the chloride processes are plutonium residues from pyrochemical operations, metal preparation, metal fabrication, analytical laboratory operations, and residues from other DOE facilities. The overall goal of the chloride operations is to recover plutonium from scrap and residues and produce a purified plutonium oxide for conversion to metal. Processes include pretreatment, dissolution, purification, and hydroxide precipitation.

TIME LINES: CHLORIDE OPERATIONS

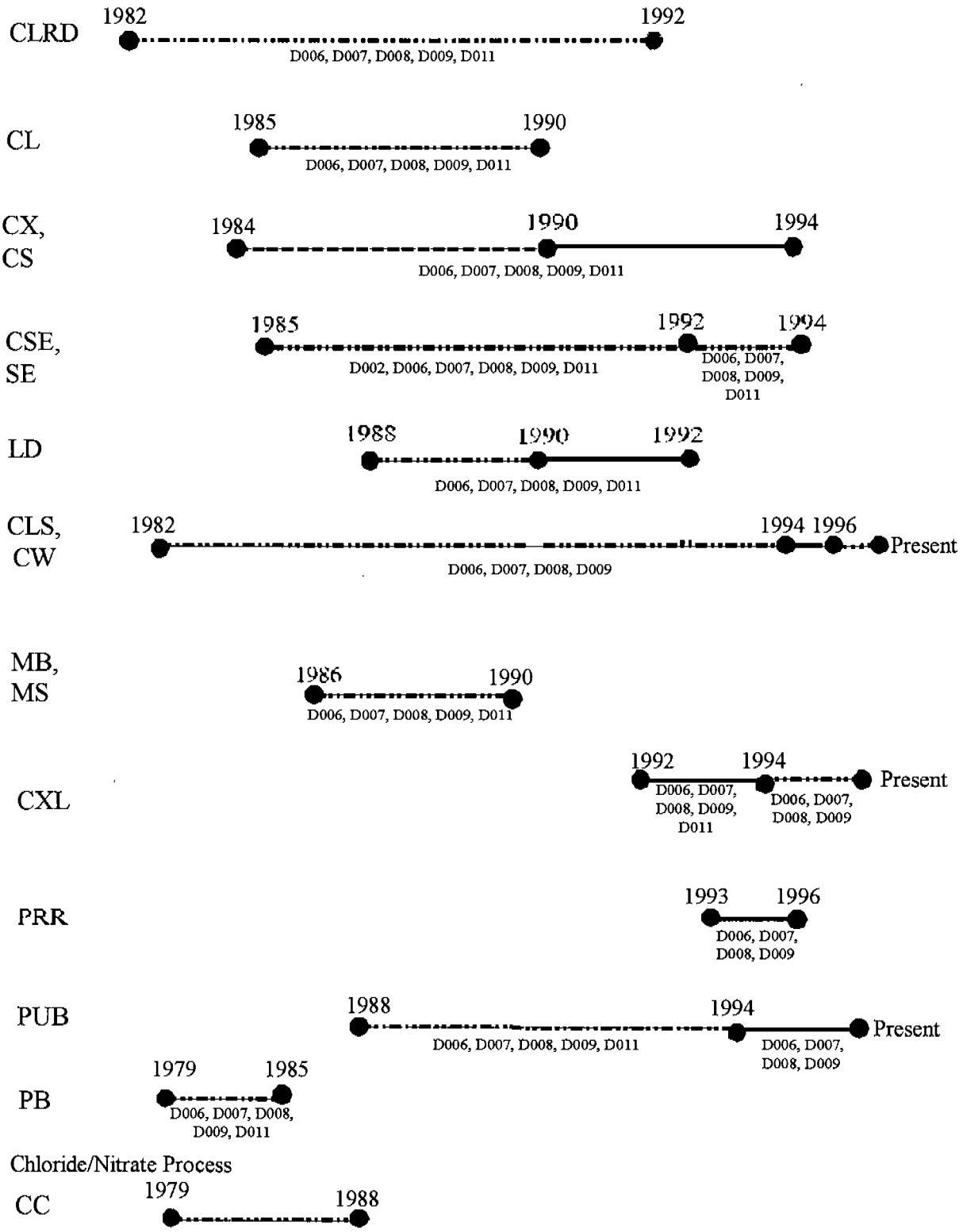

TIMELINE EXPLANATION

The P/S code is established in either the P/S diagrams or in both (or all) revisions of the procedures designating the start and end dates (e.g., Rev. 0 to Rev. 1; or Rev. 0 to Rev. 5)

The P/S code is not identified in the procedure, but the process description matches the P/S code and the description in previous or later revisions of the same procedure.

Extrapolate out two(2) years beyond the last procedure to next possible review date.

Time period based on subject matter expert comments.

ACCEPTABLE KNOWLEDGE ROADMAP

P/S Codes: CLRD, CL, CX, CS, CSE, SE, CLS, CW, MB, MS, CXL, PRR, PUB, PB, and CC (jointly with nitrate)

Documents are in the TWCP Records Management Center

TWCP Record No.	Information Category Code*	Information	Source	Summary	Limitations
Cl-1/TWCP-PLAN-02.7-001, R.2	b	Waste stream delineation	*Los Alamos National Laboratory Transuranic Waste Characterization Sampling Plan* (TWCP-PLAN-02.7-001,R.2)	Correlations between waste streams from TA-55 with regard to time of generation, waste generating processes, and site-specific facilities	The LANL TRU Waste Characterization Sampling Plan contains information that was extracted from the TRI waste database (CST-14 database). As explained in Section 3 (for retrievably stored waste) and Section 5 (for newly generated waste), the TA-55 controlled database should be used for waste stream characterization.
Cl-2/TWCP-352	b	Description of plutonium recovery processes	Wastes from Plutonium Conversion and Scrap Recovery Operations, LA-11069, March 1988	Document describes the Pu residues and the various treatment approaches used in recovering plutonium from scrap	Document does not give information about RCRA constituents introduced or present in the processes
Cl-3/TWCP-619	d	All TA-55 waste is defense related	Memo from Doug Sankey.	All TA-55 waste is defense related	None
Cl-4/TWCP-698	b	Gives Material Type compositions	NMT memo WM/EC96-032	Gives Material Type compositions	Does not give information on how material may fractionate in TA-55 waste processes
Cl-5/TWCP-882 (UCNI)	d	Secondary Radionuclides and Toxic Metals in TA-55 TRU Waste	Memo from Jim Foxx	Lists additional radionuclides and metals potentially in waste, subdivided by process status code. Covers time period from 1978 to the present.	Best information available, but it is based on worker recollection because other records are not available.
Cl-6/TWCP-3547	c	Developmental Chloride Solvent Extraction Process	Procedure 462-REC, all revisions	Describes development of chloride line processes	Limited information on wastes

TWCP Record No.	Information Category Code*	Information	Source	Summary	Limitations
Cl-7/TWCP-3547	c	Recovery and Purification of Pu from Direct Oxide Reduction (DOR) Salts by Chloride Anion Exchange	Procedure 463-REC, all revision	Process descriptions	Describes only one portion of chloride line; does not address use of RCRA-regulated solvents
Cl-8/TWCP-3547	c	Hydroxide Precipitation of Chloride Solutions Containing Organic Chemicals	Procedure 467-REC, all revisions	Process descriptions	Describes only one portion of chloride line; does not address use of RCRA-regulated solvents
Cl-9/TWCP-3547	c	Dissolution and/or Leaching of Various Materials in HCl	Procedure 470-CLO, all revisions	Process description	Describes only one portion of chloride line
Cl-10/TWCP-3547	c	Oxalate Precipitation of Plutonium from Chloride Solutions	Procedure 471-CLO, all revisions	Process description	Describes only one portion of chloride line
Cl-11/TWCP-3547	c	Chloride Solvent Extraction	Procedure 472-CLO	Process description	Describes only one portion of chloride line; does not address use of RCRA-regulated solvents
Cl-12/TWCP-3547	c	Purification and Recovery of Plutonium by Chloride Anion Exchange	Procedure 473-CLO, all revisions	Process description	Describes only one portion of chloride line
Cl-13/TWCP-3547	c	Hydroxide Precipitation of Chloride Waste Streams	Procedure 474-CLO, all revisions	Process description	Describes only one portion of chloride line
Cl-14/TWCP-3547	c	Recovery of Plutonium from Plutonium-Beryllium Neutron Sources	Procedure 476-CLO, all revisions	Process description	Detail only in decladding operation
Cl-15/TWCP-3547	c	Calcination Operation for Aqueous Chloride Processes	Procedure 477-CLO, all revisions	Process description	Describes only one portion of chloride line
Cl-16/TWCP-3547	c	Dicesium Hexachloro Plutonate	Procedure 478-CLO, all revisions	Process description	Additional step of DCHP precipitation used for certain feed material only
Cl-17/TWCP-3547	c	Head End Processing of Aqueous Chloride Plutonium	Procedure 479-CLO, all revisions	Process description	Does not describe where silver nitrate and potassium chromate are disposed of
Cl-18/TWCP-3547	c	Hydroxide Precipitation of the Plutonium in Chloride Waste	Procedure 481-REC, all revisions	Process description	Describes only one portion of chloride line

TWCP Record No.	Information Category Code*	Information	Source	Summary	Limitations
Cl-19/TWCP-3547	c	Recovery of Plutonium from Hydrochloric CLS-1 Solutions	Procedure 482-REC, all revisions	Process description	Does not address RCRA-regulated solvents
Cl-20/TWCP-3547	c	Decladding of PuBe Neutron Sources	Procedure 482-CLO, all revisions	Process description	Decladding only
Cl-21/TWCP-3547	c	Purification and Recovery of Pu by Chloride Anion Exchange	Procedure 483-CLO, all revisions	Process description	Describes only one portion of chloride line
Cl-22/TWCP-3547	c	Radiochemical Analysis at TA-55	Procedure 029-CST-1, R02	Process description	Feed material only; does not address further processing
Cl-23/TWCP-3547	d	Answers to questions about chloride processes	Interview with Jim Foxx 8/31/99	Answers to questions on Chloride processes	none
Cl-24/TWCP-3547	d	Answers to questions about chloride processes	Interview with Jim Foxx, 9/15/99	Answers to questions on Chloride processes	none
Cl-25/TWCP-3547	d	Answers to questions about chloride processes	Interview with Jim Foxx, 9/23/99	Answers to questions on Chloride processes	none
Cl-26/TWCP-3547	d	Answers to questions about chloride processes	Interview with Tim Hayes, 1/12/00	Answers to questions on Chloride processes	none
Cl-27/TWCP-3547	d	Answers to questions about chloride processes	Interview with Tim Hayes, 6/1/00	Answers to questions on Chloride processes	none
TWCP-3940	b	Process AK Report on Nitrate Process Operations at TA-55	Process Acceptable Knowledge for Nitrate Operations at TA-55	Contains all information located on nitrate processes at TA-55 from 1978 to the present..	none

*As defined in TWCP-QP-1.1-021, Section 6.2.4:

a. Forms intended for use in waste certification

b. Data from controlled databases and published documents

c. Unpublished data

d. Interviews, memos, and letters

MAP OF TA-55

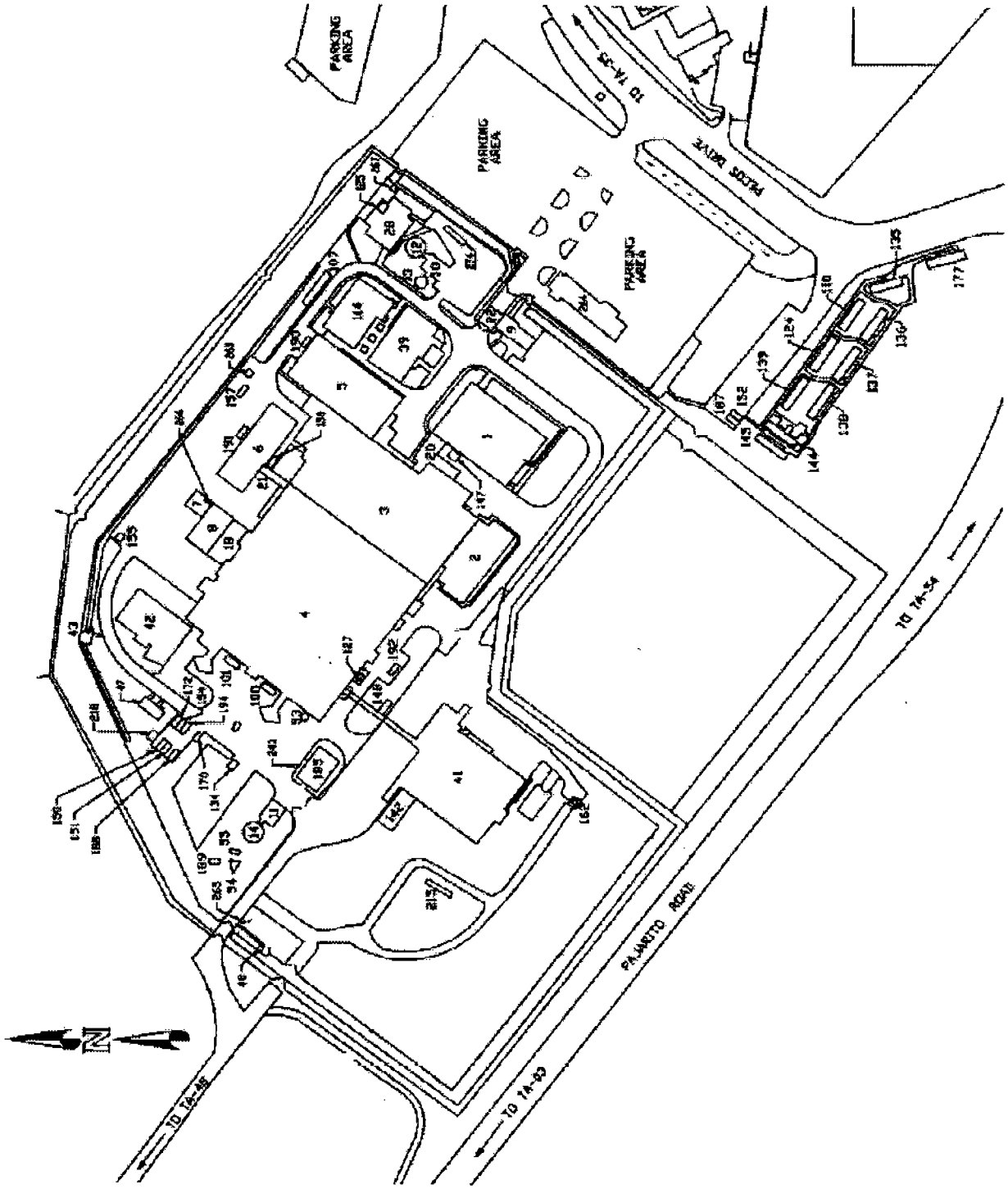
PARKING AREA
PARKING AREA
PARKING AREA
TO TA-54
TO TA-55
TO TA-53
PALMETTO ROAD
N

P/S Code	P/S Title	Process Inputs		Process Outputs		EPA	References[3]
		Feed Stream(s)	Chemicals/Reagents	Product	Waste Stream[1]	Codes[2]	
CC	Calcination	OY	none	Pu oxide to vault; to P/S code OR	none	none	Cl-26, PAFD 3/85
CL	Crucible Leach	Crucibles	Hydrochloric acid	Pu-enriched solutions to P/S codes SE or CX (chloride line) (hydroxide cake) for further processing; P/S code SP (nitrate line); vault	1) Crucible pieces to cement fixation (or on occasion, debris waste) 2) Debris waste	D006, D007, D008, D009, D011	Cl-26, PAFD 10/86
CLRD	Aqueous Chloride R&D	See Chloride Feed Materials list	Hydrochloric acid, other chemicals depending on R&D projects	Pu-enriched solutions to vault; hydroxide cake	Debris waste	D006, D007, D008, D009, D011	PAFD 10/90
CLS	Accountable CLS Chloride Solutions	Analytical laboratory sample residues	Magnesium hydroxide, potassium hydroxide, sodium hydroxide	vault; hydroxide cake	Debris waste	D006, D007, D008	Cl-15, Cl-20, Cl-27
CS	Chloride Solutions	P/S codes CX, various other feed materials (see list)	Oxalic acid, hydroxylamine hydrochloride, potassium fluoride, sodium hydroxide, sodium bicarbonate, bromocresol purple, silver nitrate, potassium chromate, argon gas, aluminum chloride	vault; hydroxide cake	Debris waste	D006, D007, D008, D009, D011	Cl-26, PAFD 11/86

P/S Code	P/S Title	Process Inputs		Process Outputs		EPA	References[3]
		Feed Stream(s)	Chemicals/Reagents	Product	Waste Stream[1]	Codes[2]	
CSE	Chloride Solvent Extraction	P/S codes CX, CSE, various other feed materials (see list)	Hydrochloric acid, oxalic acid, hydroxylamine hydrochloride, potassium fluoride, calcium carbonate, sodium hydroxide, sodium bicarbonate, bromocresol purple, silver nitrate, potassium chromate, argon gas, aluminum chloride, TCE, TBP	vault; hydroxide cake	1) Debris waste 2) Liquids absorbed in vermiculite 3) Pieces left after filtration to cement fixation	F002, D006, D007, D008, D009, D011	Cl-26, Cl-27, PAFD 8/89
CX	Chloride Anion Exchange	P/S codes ST, PTP, PK, PRR, OR, EXT, SS	Hydrochloric acid, oxalic acid, hydroxylamine hydrochloride, potassium fluoride, calcium carbonate, sodium hydroxide, sodium bicarbonate, bromocresol purple, silver nitrate, potassium chromate, argon gas, aluminum chloride, sodium nitrite	P/S codes SP or HCD (nitrate line) (hydroxide cake); Pu oxide to vault; recycle back or continue through chloride process	1) Pieces left after filtration to cement fixation 2) Ion exchange resins to cement fixation 3) Debris waste	D006, D007, D008, D009, D011	Cl-10, Cl-12, Cl-17, Cl-21, Cl-27
CXL	Experimental Chloride Extraction Line	See Chloride Feed Material list; note no RCRA-regulated solvents used after 1992.	Hydrochloric acid, oxalic acid, calcium carbonate, magnesium hydroxide, potassium hydroxide, sodium hydroxide, bromocresol purple, ferrous chloride, stannous chloride, calcium fluoride, sodium nitrite, cesium chloride, argon gas, aluminum chloride	P/S codes SP, CR, LR, DS, or NR (all nitrate line) (hydroxide cake); recycle back or continue through chloride process; vault	1) Pieces left after filtration to cement fixation (or occasionally, debris waste) 2) Ion exchange resins to cement fixation 3) Debris waste	D006, D007, D008, D009	Cl-10, Cl-12, Cl-13, Cl-15, Cl-16, Cl-19, Cl-21

P/S Code	P/S Title	Process Inputs		Process Outputs		EPA	References[3]
		Feed Stream(s)	Chemicals/Reagents	Product	Waste Stream[1]	Codes[2]	
CW	Caustic Waste	P/S codes CLS, CSE, other chloride solutions	Calcium or sodium or potassium hydroxide	P/S code HCD (nitrate line) (hydroxide cake) or vault	Debris waste	D006, D007, D008, D009	Cl-26, Cl-27, PAFD 10/86
LD	Chloride Leach & Dissolution	P/S code SS; also see Chloride Feed Materials list	Hydrochloric acid	P/S code CX (chloride line); SP (nitrate line) (hydroxide cake); Pu oxide to vault	1) Pieces left after filtration to cement fixation (or occasionally, debris waste) 2) Debris waste	D006, D007, D008, D009, D011	Cl-26, PAFD 9/88
MB	Nitric Dissolution of Molten Salts	Molten salts	Hydrochloric acid, nitric acid	P/S codes SE or CS (chloride line), LR or CN or PS (nitrate line) (hydroxide cake)	Debris waste	D006, D007, D008, D009, D011	Cl-26, PAFD 10/86
MS	Molten Salts Purification Dissolution	Molten salts	Hydrochloric acid	P/S code SE (chloride line); Pu oxide to vault; hydroxide cake	Debris waste	D006, D007, D008, D009, D011	Cl-26, PAFD 6/85

P/S Code	P/S Title	Process Inputs		Process Outputs		EPA	References[3]
		Feed Stream(s)	Chemicals/Reagents	Product	Waste Stream[1]	Codes[2]	
PB	Pu-Be Source Recovery	Pu-Be sources	Hydrochloric acid, sodium nitrite, DCHP, oxalic acid, potassium hydroxide, silver nitrate, hydroxylamine hydrochloride, bromocresol purple, sodium bicarbonate, potassium dichromate, hydrofluoric acid, calcium carbonate, stannous chloride, aluminum chloride	P/S codes CXL (recycle back through chloride line); P/S codes HCD, CD (nitrate line) (hydroxide cake)	1) Metal cladding to metals waste stream 2) Pieces left after filtration to cement fixation 3) Debris waste	none D006, D007, D008, D009, D011	Cl-20, Cl-21
PRR	Pyrochemical Residue Recovery	See Chloride Feed Materials list	Hydrochloric acid, oxalic acid, calcium carbonate, magnesium hydroxide, potassium hydroxide, sodium hydroxide, bromocresol purple, argon gas, aluminum chloride	P/S codes CX, CXL (chloride line); P/S code SP (nitrate line) (hydroxide cake), vault	1) Pieces left after filtration to cement fixation 2) Ion exchange resins to cement fixation 3) Debris waste	D006, D007, D008, D009, D011	Cl-15, Cl-19, Cl-21

P/S Code	P/S Title	Process Inputs		Process Outputs		EPA	References[3]
		Feed Stream(s)	Chemicals/Reagents	Product	Waste Stream[1]	Codes[2]	
PUB	Pu/Be Source Recovery	Pu-Be sources	Hydrochloric acid, sodium nitrite, DCHP, oxalic acid, potassium hydroxide, silver nitrate, hydroxylamine hydrochloride, bromocresol purple, sodium bicarbonate, potassium dichromate, hydrofluoric acid, calcium carbonate, stannous chloride, aluminum chloride	P/S codes CXL (chloride line); P/S codes HCD, CD (nitrate line) (hydroxide cake)	1) Metal cladding to metals waste stream 2) Pieces left after filtration to cement fixation 3) Debris waste	none D006, D007, D008, D009, D011	Cl-14, Cl-20, Cl-21
SE	Solvent Extraction	P/S codes PK, LD, CS, PTP	Hydrochloric acid, oxalic acid, hydroxylamine hydrochloride, potassium fluoride, calcium carbonate, sodium hydroxide, sodium bicarbonate, bromocresol purple, silver nitrate, potassium chromate, argon gas, aluminum chloride, TCE, TBP, CMPO	P/S code CS (chloride line), vault; hydroxide cake	1) Debris waste 2) Liquids absorbed in vermiculite 3) Pieces left after filtration to cement fixation	F002, D006, D007, D008, D009, D011	Cl-26, Cl-27, PAFD 11/86

[1]All P/S codes generate routine laboratory debris waste consisting of glassware, plastics, ceramic materials, paper, rags, HEPA filters, metal containers, brushes, and small tools. Leaded gloves may also be generated and are segregated.

[2] All P/S codes have the potential to generate leaded gloves. The gloves are segregated from other debris waste and are assigned EPA hazardous waste code D008. The D008 code is assigned to the leaded gloves waste stream rather than to each P/S code waste stream.

[3] Refer to the Acceptable Knowledge Roadmap in Attachment 3.

LIST OF CHLORIDE OPERATIONS FEED MATERIALS

- impure Pu metal
- pyrochemical salts
- crucible pieces (tantalum, magnesium oxide)
- impure metals, including cadmium, mercury, zinc, chromium
- anode heels
- oxides
- hydroxides
- Pu-Be sources and turnings
- stainless steel and/or tantalum residues from decladding of Pu-Be sources
- analytical laboratories (CLS-1, etc.) solutions

Attachment 6. Simplified Schematic of Chloride Line

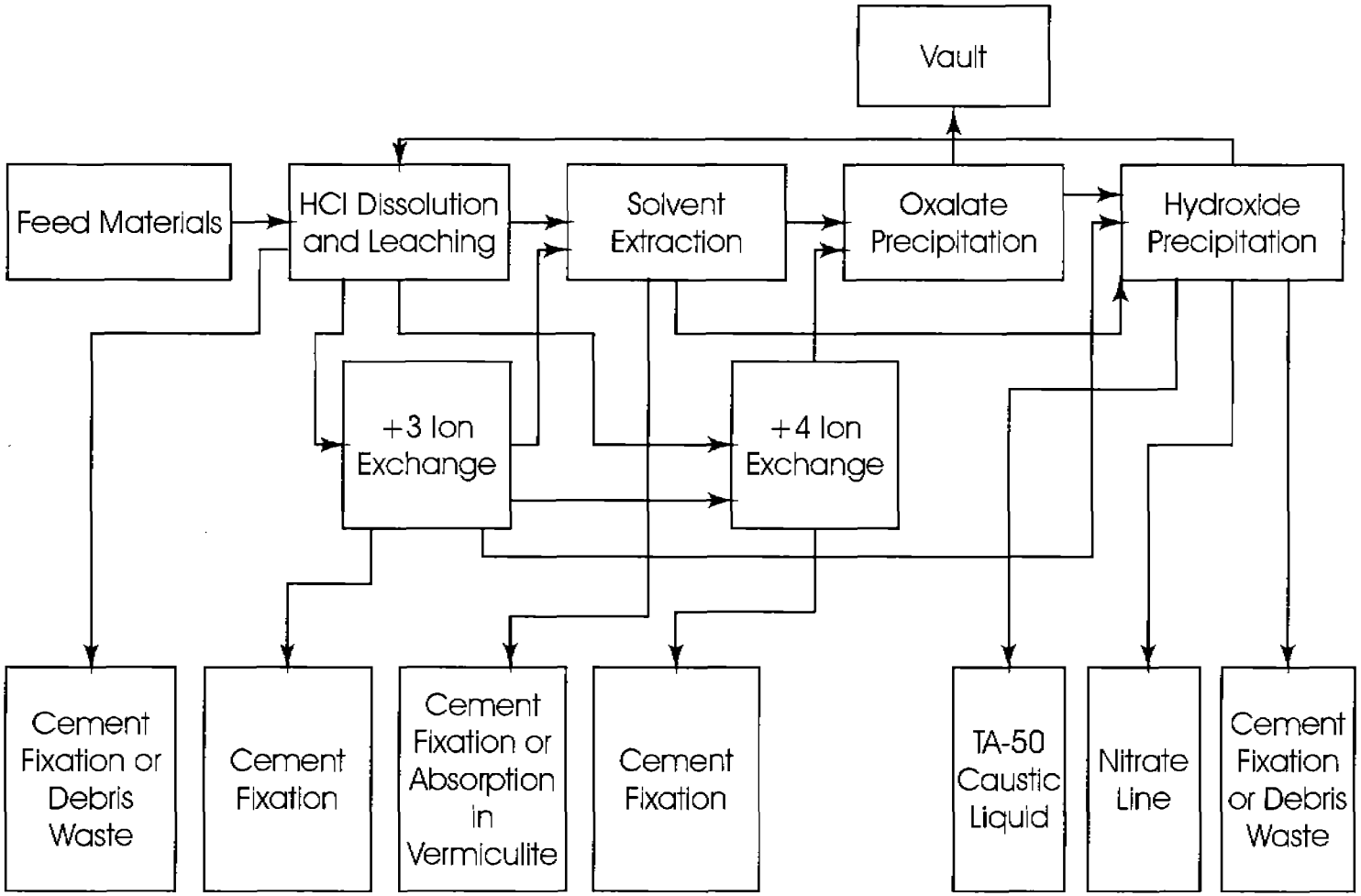

TIME LINES: CHLORIDE OPERATIONS

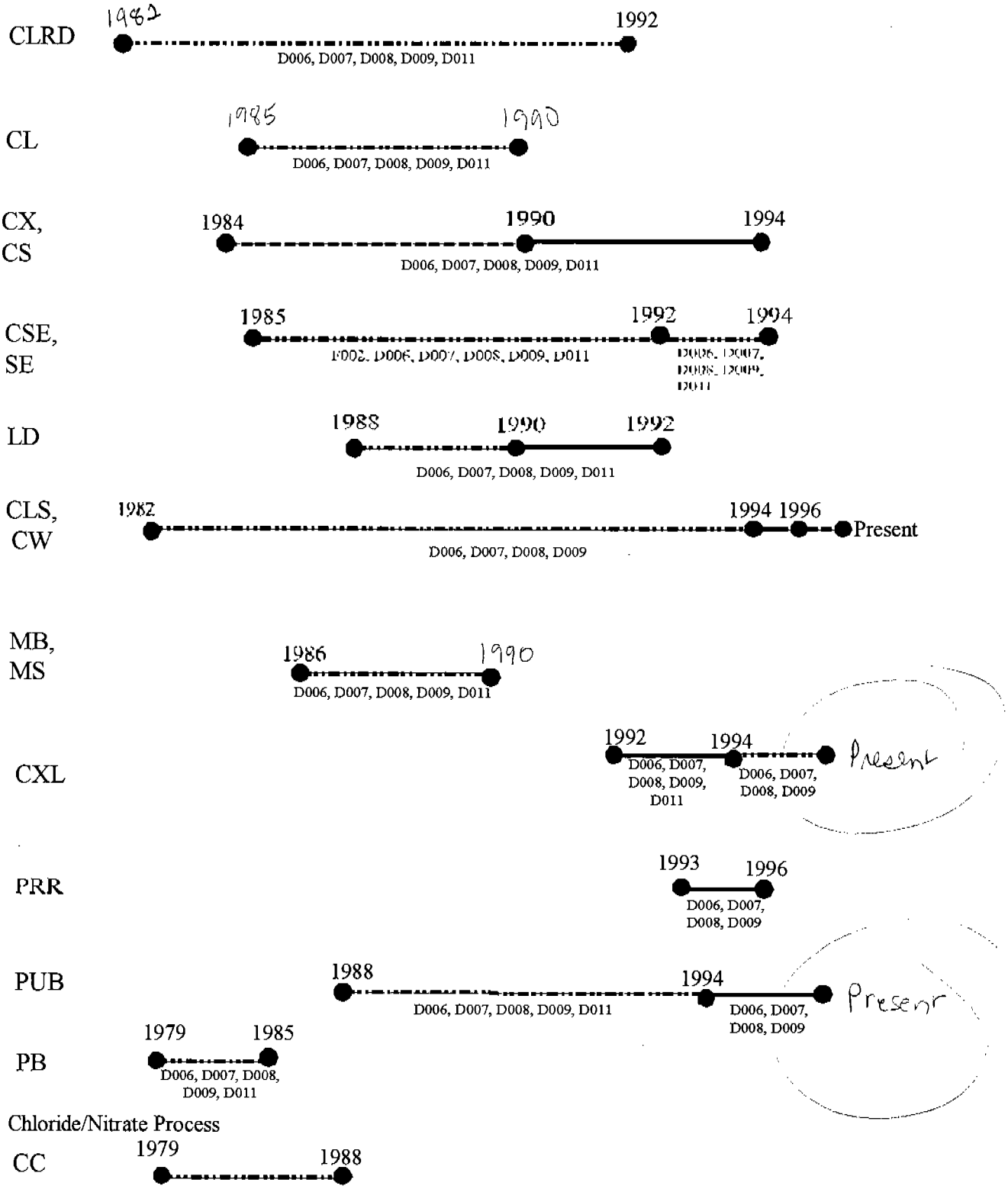

TIMELINE EXPLANATION

The P/S code is established in either the P/S diagrams or in both (or all) revisions of the procedures designating the start and end dates (e.g., Rev. 0 to Rev. 1; or Rev. 0 to Rev. 5).

The P/S code is not identified in the procedure, but the process description matches the P/S code and the description in previous or later revisions of the same procedure.

Extrapolate out two (2) years beyond the last procedure to next possible review date.

The P/S code is not identified in the procedure, but the process description matches that of the P/S diagram or P/S code description.

Time period based on subject matter expert comments

Los Alamos National Laboratory
Transuranic Waste Characterization/Certification Project

PROCESS ACCEPTABLE KNOWLEDGE REPORT FOR CHLORIDE OPERATIONS AT TA-55

LA-UR 004001

Date: June 21, 2000

Waste Generated from Process/Status Codes:

CLRD, CL, CX, CS, CSE, SE, CLS, CW, MB, MS, CXL, PRR, PUB, PB, and CC (jointly with nitrate)

Site Project Manager (Print Name)	Signature	Date
Site Project QA Officer (Print Name)	Signature	Date
Preparer (Print Name)	Signature	Date
Waste Certification Official (Print Name)	Signature	Date
Facility Representative (Print Name)	Signature	Date

CONTENTS

Section **Page**

ACRONYMS iii

INTRODUCTION 1

1.0 METHODOLOGY OF AK INFORMATION SEARCH 1

2.0 DESCRIPTION OF CHLORIDE OPERATIONS PROCESSES 1
- 2.1 Facility and Mission 1
- 2.2 Waste Physical Form and Content Description 1
- 2.3 Waste Volume and Time Period of Generation 2
- 2.4 Waste Stream Generation Process 2
  - 2.4.1 Overview 2
  - 2.4.2 Process Descriptions 2
  - 2.4.3 Process Flow Diagrams 5
- 2.5 Material Inputs to the Waste Generation Process 5
  - 2.5.1 Physical Waste Form Identification 5
  - 2.5.2 Radionuclide Content Identification 5
  - 2.5.3 Chemical Content Identification 6

3.0 ASSIGNMENT OF EPA HAZARDOUS WASTE NUMBERS 6
- 3.1 F, K, and P Listings 6
- 3.2 Toxicity 6
- 3.3 Corrosivity, Reactivity, and Ignitability 6

4.0 VERIFICATION THAT IGNITABLE, REACTIVE AND CORROSIVE WASTES WERE EXCLUDED 6

5.0 VERIFICATION THAT INCOMPATIBLE CHEMICALS WERE PROHIBITED 6

6.0 VERIFICATION THAT THERE ARE NO COMPRESSED GASES, FREE LIQUIDS, NONRADIONUCLIDE PYROPHORICS, SEALED CONTAINERS GREATER THAN FOUR LITERS IN VOLUME, NOR >1% RADIONUCLIDE PYROPHORICS 7

7.0 VERIFICATION THAT THERE ARE NO POLYCHLORINATED BIPHENYLS (PCBs) 7

8.0 DETERMINATION OF THE RADIONUCLIDE ISOTOPIC COMPOSITION 7

9.0 PACKAGING 7

Attachments

1 Acceptable Knowledge Summary (1 page)

2 Time Lines—Chloride Operations (1 page)

3 Acceptable Knowledge Roadmap (3 pages)

4 Map of TA-55 (1 page)

5 Process Input/Output Table and List of Feed Materials (6 pages)

6 Simplified Schematic of Chloride Line (1 page)

DRAFT PROCESS ACCEPTABLE KNOWLEDGE REPORT CHLORIDE OPERATIONS AT TA-55

INTRODUCTION

All transuranic (TRU) waste must be sufficiently characterized and certified before it is shipped to the Waste Isolation Pilot Plan (WIPP). The U.S. Environmental Protection Agency (EPA) allows use of acceptable knowledge (AK) for waste characterization. EPA uses the term AK in its guidance document, *Waste Analysis at Facilities that Generate, Treat, Store and Dispose of Hazardous Waste.* Attachment B, Waste Analysis Plan, to the *Hazardous Waste Facility Permit Issued to the Waste Isolation Pilot Plant* (EPA No. NM4890139088) (WIPP WAP) defines AK and provides guidelines on how AK should be obtained and documented.

1.0 METHODOLOGY OF AK INFORMATION SEARCH

The AK search for the information related to waste streams resulting from chloride operations covered:

- Review of the *Los Alamos National Laboratory Transuranic Waste Characterization Sampling Plan* (TWCP-PLAN-0.2.7-001,R.0) (Cl-1/TWCP-3070) (Sampling Plan) that includes information regarding all waste streams

- Review of documents related to the waste generation and waste management activities at TA-55 as listed on the Acceptable Knowledge Roadmap (Attachment 3) (safety analysis reports [SARs], safe operating procedures [SOPs], reports, memos, etc.) (Cl-6 through Cl-22 [all in TWCP-3547]) ← no. OK

- Interviews with personnel involved with waste generation and waste management at TA-55 as listed on the Acceptable Knowledge Roadmap (Cl-23 through Cl-27 [all in TWCP-3547]) ← no, OK

- Analysis of processes generating waste, including in-process sampling and testing.

The Transuranic Waste Characterization/Certification Project (TWCP) Records Management/Document Control (RMDC) Center contains copies of the documents referenced in this report.

2.0 DESCRIPTION OF CHLORIDE OPERATIONS PROCESSES

The following sections describe chloride operations processes, and identify the resulting wastes as well as outputs that are sent to other operations, such as nitrate operations, for further processing.

2.1 Facility and Mission

The Technical Area (TA)-55 Plutonium Reprocessing facility processes plutonium from residues generated through the defense complex into pure plutonium feedstock. The waste streams generated at the TA-55 Plutonium Reprocessing facility as waste from chloride process operations to reprocess/recover plutonium are entirely defense related (Cl-3/TWCP-614). These waste streams were generated at building PF-4 of the TA-55 plutonium facility. A map of the TA-55 facility is attached to this report (Attachment 4).

2.2 Waste Physical Form and Content Description

Wastes generated during chloride operations, primarily debris wastes and wastes entered into the cement fixation process, are covered by this Draft Process Acceptable Knowledge Report for Chloride Operations

at TA-55. They are identified by having the process status codes for chloride operations: CLRD, CL, CX, CS, CSE, SE, CLS, CW, MB, MS, CXL, PRR, PUB, and PB; CC applies to both chloride and nitrate operations. General debris waste categories include

- Cellulose-based waste (for example, paper, cloth)
- Plastic-based waste (for example, gloves, tape)
- Rubber
- Metal debris (for example, wire, hose clamps, tools)
- Glass debris
- Steel packaging materials

These debris items are contaminated with small amounts of material from chloride operations.

2.3 Waste Volume and Time Period of Generation

This report covers waste streams generated from 1982, when the chloride line was first developed, to the present. Wastes generated in the chloride operations have process/status (P/S) codes CLRD, CL, CX, CS, CSE, SE, CLS, CW, MB, MS, CXL, PRR, PUB, and PB; CC applies to both chloride operations and nitrate operations. Wastes from the chloride operations have different associated Resource Conservation and Recovery Act (RCRA) codes depending on the time period they were generated. The P/S codes, their time period of generation, and corresponding RCRA codes are shown graphically in Attachment 2, Time Lines—Chloride Operations.

Waste volumes for each P/S code have not been tracked. Instead, waste items are segregated into similar material types and packaged in waste containers. Waste containers are segregated into waste streams in the Sampling Plan, and waste stream volumes are reported in that document.

2.4 Waste Stream Generation Process

The following sections describe the generation of waste streams as well as outputs to the nitrate operation.

2.4.1 Overview

Manufacturing and research operations performed at TA-55 in the production of plutonium result in the production of plutonium-contaminated scrap and residues. These residues are processed to recover as much plutonium as is practical (Cl-2/TWCP-352). TA-55 has extensive capabilities for the extraction and recovery of plutonium from residues and scraps generated from operations at various Los Alamos National Laboratory (LANL) facilities and other U.S. Department of Energy (DOE) sites. These recovery operations, as well as associated maintenance operations, and TA-55 plutonium research are the sources of TRU waste generated at TA-55.

2.4.2 Process Descriptions

Detailed information about the TA-55 plutonium recovery processes can be found in *Waste from Plutonium Conversion and Scrap Recovery Operations* (Cl-2/TWCP-352). In general, TA-55 plutonium recovery processes can be divided into three major process lines:

- Aqueous chloride-based processes
- Aqueous nitrate-based processes
- Pyrochemical operations

This report concerns only the first of these, the aqueous chloride-based process line.

The primary feed sources for the chloride processes are plutonium residues from pyrochemical operations, metal preparation, metal fabrication, analytical laboratory operations (see below), and residues from other DOE facilities. The overall goal of the chloride operations is to recover plutonium from scrap and residues and produce a purified plutonium oxide for conversion to metal.

As mentioned above, analytical laboratory operations are one feed into the chloride operations. Samples from the various stages of the production of plutonium are sent for chemical (e.g., radiochemical) analyses. After analysis, excess samples that are either an intermediate or direct product having considerable value, and sample residues rich in plutonium, are returned to TA-55 as feedstock for the production of plutonium metals and oxides. The solvents used in some of the analytical analyses do not carry over an RCRA F listing designation because the sample residues are not a solid waste and are considered feedstock.

Chloride operations can be broken down into the following process steps:

- Pretreatment
- Dissolution
- Purification
- Hydroxide Precipitation

Each of these process steps is described below. A complete listing of P/S codes, their descriptions, and their inputs and outputs is found in Attachment 5, along with a list of feed materials into the chloride process. A simplified schematic diagram of chloride operations is found in Attachment 6.

2.4.2.1 Pretreatment (P/S codes CR, PB, PUB)

TWCP-3940 + add to workup

Pretreatment includes primarily physical processes used to prepare scrap and residues for dissolution. Pretreatment may include sorting, crushing, and/or pulverizing (P/S code CR; see Process Acceptable Knowledge Report for Nitrate Operations). As materials are received from various areas in TA-55, they are sorted and sent to various other pretreatment processes or directly to dissolution, depending on the physical nature of the scrap or residue, and the amount and type of plutonium associated with the material.

OK rationale

A separate pretreatment procedure is the decladding of plutonium-beryllium sources (P/S codes PB, PUB; Cl-14/TWCP-3547, Cl-20/TWCP-3547, Cl-21/TWCP-3547). The metal is removed from the sources, and is placed into containers with metal from all other PF-4 operations (the metals waste stream; not a chloride operations waste). The Pu-Be sources, after the cladding has been removed, are entered into the chloride line for plutonium recovery along with other materials. The P/S code for the decladding and processing of the Pu-Be sources in the chloride line was PB prior to 1988, and PUB from 1988 to the present.

?

no, this is [illegible]

2.4.2.2 Dissolution (P/S codes CLRD, CX, CXL, CL, LD, CLS)

In general, the dissolution step can be described as the use of hydrochloric acid to leach and dissolve plutonium from scrap, crucibles, residues, and various solutions, including solutions from the analytical chemistry laboratory known at different times as CHM-1, CLS-1, CST-1, and NMT-1. The scrap and residues may include lead, cadmium, mercury, and chromium from feed materials (see Attachment 5), as

well as from the stainless steel and shielding used in the chloride operations equipment (Cl-27/TWCP-3547).

OK reading

The chloride line was developed in 1982, and operated under P/S code CLRD until 1984; as P/S code CX (along with other more feed-specific codes described below) until 1994; and as P/S code CXL from 1994 to the present.

NOTE: After dissolution, if a plutonium-containing solution contained too much iron for the solvent extraction process, it went to +3 ion exchange (not to be confused with the +4 ion exchange as a part of purification) as an intermediate step prior to entering the purification phases of chloride operations.

Some P/S codes were used for dissolution of specific feed materials. CL, used from 1985 to 1990, applied to crucible leaching in HCl. LD, used from 1988 to 1992, applied to the dissolution step for most materials but specifically excluded solutions from the analytical laboratory (CLS-1, etc.). P/S codes MB and MS, 1985–1990, were used for molten salts/pyrochemical salts dissolution only. CLS was used when solutions from the analytical laboratory were the only feed material.

Waste solids from HCl dissolution generally went to cement fixation, but on occasions to debris waste (Cl-26/TWCP-3547).

Since analyses have not been performed on these wastes, all are required to carry the RCRA codes for cadmium (D006), chromium (D007), lead (D008), and mercury (D009) due to the presence of these metals in the feed stock and solvent wastes.

2.4.2.3 Purification (P/S codes CX, CS, CSE, SE, CL, CLS, MB, MS, PRR, PB, and PUB)

The purification steps in the chloride line may include solvent extraction, ion exchange, and oxalate precipitation, depending on the chemical nature of the solutions to be purified.

OK reading

Solvent extraction (P/S codes CSE and SE) has been used in the chloride line since 1985 (Cl-26/TWCP-3547, Cl-27/TWCP-3547). The RCRA-regulated solvent, tetrachloroethylene (F002), was used in the solvent extraction process until 1992. Debris waste from the solvent extraction process up until 1992 therefore carries the EPA code F002, as do liquid wastes absorbed in vermiculite. However, pieces left after filtration in the hydrochloric acid dissolution step are removed from the line prior to solvent extraction, so do not carry the F002 designation (see Attachment 6, Simplified Schematic of the Chloride Line).

Silver nitrate titration was used to determine chloride concentration (also resulting in formation of potassium chromate) in both the solvent extraction and ion exchange processes up until 1992, so the RCRA codes D011 and D006 are applied to all ~~the codes listed in this paragraph~~ wastes during this time period.

The chloride line was halted from 1992 until 1994. When it resumed operation, non-RCRA-regulated solvents replaced the TCE used in solvent extraction, and silver nitrate titration was no longer performed. P/S code CXL was initiated to denote the newly operational chloride line.

During the operation of the chloride line, some leaching of chromium from the stainless steel equipment, and lead and cadmium from shielding, always occurs, and mercury (from feed materials) is present as well (Cl-27/TWCP-3547). These metals ~~end up~~ concentrate in the cement-fixated waste from chloride operations, and when analyses have been run on these wastes, they were over RCRA limits (Cl-27/TWCP-3547). ~~Therefore, cemented wastes from the chloride line carry the RCRA codes for these metals, except for P/S codes MB and MS since there is no cemented waste from these P/S codes (Cl-26/TWCP-3547).~~

OK reading

Since analyses for these metals have not been performed on these wastes, they are also required to carry the above RCRA codes.

Ion exchange columns (+3 and +4) are used to collect plutonium and separate out impurities such as americium and uranium (P/S codes CX, CXL, and PRR). When discarded, the resins carry the EPA codes D006-D009 for the cadmium, chromium, lead, mercury, and prior to 1994, D011 for silver.

The enriched plutonium solutions from solvent extraction or ion exchange are treated with oxalic acid (oxalate precipitation) (P/S codes CS, CSE, CX, CXL, PB, PUB, and SE), and the resulting plutonium precipitate goes to be calcined (P/S code CC) and eventually to the vault. The liquid solution goes to hydroxide precipitation.

2.4.2.4 Hydroxide Precipitation (P/S codes CLS, CW, PRR)

In this step, the solutions from purification steps are precipitated with potassium, magnesium, or sodium hydroxide. The resulting enriched cakes (greater than economic discard level) go to nitrate operations for further processing (see Time Lines in Attachment 2 for P/S codes and corresponding RCRA codes). The hydroxide cake (lower than economic discard level) fines were cemented until 1995, with large chunks of hydroxide filtrate cakes (lower than economic discard level) placed into containers for disposal. Based on a revision to the *Waste Acceptance Criteria for the Waste Isolation Pilot Plant* (DOE/WIPP-069) (WIPP WAC) in 1995, all cake material lower than a revised economic discard level is containerized for disposal as debris waste. Waste caustic liquid meeting the TA-50 waste acceptance criteria (WAC) is disposed through the caustic waste line. P/S code CW was used from 1985 to 1992 for feed materials specifically containing analytical laboratory (CLS-1, etc.) solutions as feed material. Occasionally, solutions from hydroxide precipitation are returned to HCl dissolution for reprocessing (see Attachment 6); RCRA code assignments would then be reflected through other P/S codes.

2.4.3 Process Flow Diagrams

A simplified process flow diagram of the TA-55 chloride operations is included as Attachment 6 to this report. Individual process accountability flow diagrams (PAFDs) for the chloride P/S codes are included in the procedures referenced in the AK Roadmap found in Attachment 3.

2.5 Material Inputs to the Waste Generation Process

The material inputs to waste from chloride operations are described below.

2.5.1 Physical Waste Form Identification

Since items from several different processes are usually combined into one waste drum, the physical waste form of each drum must be determined independently. The physical description of each waste item generated is documented on a Waste Origination and Disposition Form (WODF) by the waste generator according to controlled procedures. The P/S code for each waste item is also documented on this form.

For chloride operations, waste consists primarily of debris and cemented waste.

2.5.2 Radionuclide Content Identification

The primary plutonium material type inputs for chloride operations at TA-55 are listed in reference Cl-4/TWCP-698. The material type provides the major radionuclide components of the waste and yields an estimated Am-241 content by calculation. However, some of the plutonium recovery processes separate plutonium and americium, so that their ratios may be altered in the outputs from the processes. According to reference CL-5/TWCP-882, waste items from P/S code CXL may be either depleted or enriched in americium depending on whether the source of contamination is the process product or the process residues; however, in general, the waste will be enriched in americium (Cl-26/ TWCP-3547). Individual waste packages undergo gamma spectroscopy to provide detailed radionuclide characterization information.

OK

2.5.3 Chemical Content Identification

OK
nadine

The chemical content of waste from the chloride processes is in the form of debris waste, cemented waste, ~~or occasionally~~ pieces of hydroxide cake, which consist primarily of salts such as potassium chloride, sodium chloride, and calcium chloride and are entered into the cement fixation process or debris waste (Cl-26/TWCP-3547). In addition, caustic solutions from hydroxide precipitation are discarded through the waste line to TA-50. A table listing all P/S codes, their descriptions, and their inputs/outputs is provided in Attachment 5.

3.0 ASSIGNMENT OF EPA HAZARDOUS WASTE NUMBERS

The assignment of EPA hazardous waste codes is described below.

3.1 F, K, and P Listings

As described in Sections 2.3 and 2.4 of this report, the F002 code is assigned only to debris waste and waste absorbed in vermiculite from the solvent extraction process, up until 1992. After 1994, no F coded waste resulted from chloride operations. No K or P codes are assigned to chloride operations waste.

3.2 Toxicity

all waste

As outlined in Section 2.3 and 2.4 of this report, ~~cemented wastes and ion exchange resins~~ from the chloride line from 1982 through 1992 are assigned the toxicity characteristic codes D006, D007, D008, D009, and D011 for cadmium, chromium, lead, mercury, and silver. After 1992, the code for silver (D011) was removed from the waste due to a process change (Cl-23/TWCP-3547). ~~An exception for P/S codes MB and MS is described in the sections referenced above, and is shown on the Time Lines in Attachment 2.~~

OK nadine

3.3 Corrosivity, Reactivity, and Ignitability

See Section 4.0.

4.0 VERIFICATION THAT IGNITABLE, REACTIVE, AND CORROSIVE WASTES WERE EXCLUDED

See Section 5.0.

5.0 VERIFICATION THAT INCOMPATIBLE CHEMICALS WERE PROHIBITED

All waste containers shipped from TA-55 to TA-54 for storage were evaluated for potentially incompatible chemicals per 49 *Code of Federal Regulations* (CFR) Section 177.848, and were determined to be in compliance with this requirement.

In addition, since 1987, waste generators sign a statement on the WODF stating that the waste contains "no free liquids, pyrophorics, explosives, compressed gases, powders, or materials other than the indicated matrix."

Also, the Waste Profile Request Forms (used after 1991) include statements that the waste related to chloride operations is not ignitable (flash point >200 F), reactive, or corrosive (not applicable for solid [physical form] waste).

6.0 VERIFICATION THAT THERE ARE NO COMPRESSED GASES, FREE LIQUIDS, NONRADIONUCLIDE PYROPHORICS, SEALED CONTAINERS GREATER THAN 4 L IN VOLUME, NOR >1% RADIONUCLIDE PYROPHORICS

Verification that individual waste drums do not contain compressed gases, free liquids, or sealed containers greater than 4 L in volume must be obtained from radiography. For pyrophorics, see Section 5.0.

7.0 VERIFICATION THAT THERE ARE NO POLYCHLORINATED BIPHENYLS (PCBs)

No PCBs were introduced into the chloride operations, as documented in the TA-55 procedures.

8.0 DETERMINATION OF THE RADIONUCLIDE ISOTOPIC COMPOSITION

See Section 2.5.2.

9.0 PACKAGING

Waste packaging information will be addressed in a separate report. The waste packaging report will describe packaging configurations, packaging materials, layers of confinement, and types of inner-layer closure. The report will summarize waste packaging operations applicable to all processes at TA-55.

ACCEPTABLE KNOWLEDGE SUMMARY

WSPR No.

P/S Codes: CLRD, CL, CX, CS, CSE, SE, CLS, CW, MB, MS, CXL, PRR, PUB, PB, and CC (jointly with nitrate)

Site: LANL

Facility Mission (including defense and non-defense programs):

The TA-55 Plutonium Reprocessing facility processed Pu-239 from residues generated throughout the defense complex into pure plutonium feedstock. The waste streams from P/S codes CLRD, CL, CX, CS, CSE, SE, CLS, CW, MB, MS, CXL, PRR, PUB, PB, and CC (jointly with nitrate) were generated at the TA-55 Plutonium Reprocessing facility from chloride operations for plutonium recovery and purification.

Description of the waste stream:

Waste from chloride operations consists primarily of debris waste, including cellulose-based waste, plastic-based waste, rubber, metal debris, glass debris, and steel packaging materials, and waste sent for cement fixation.

Area(s) or building(s) where the waste stream was generated (including operations carried out in those areas):

Chloride operations wastes are generated at the PF-4 wing, Room 420, of the TA-55 plutonium facility. Manufacturing and research operations performed at TA-55 in the production of plutonium result in the production of plutonium-contaminated scrap and residues. These residues are processed to recover as much plutonium as is practical. TA-55 has extensive capabilities for the extraction and recovery of plutonium from residues and scraps generated from operations at various LANL facilities and other DOE sites. These recovery operations, as well as associated maintenance operations, and TA-55 plutonium research are the sources of TRU waste generated at TA-55.

Waste stream volume and time period of generation:

Waste volumes for each P/S code have not been tracked. Instead, waste items are segregated into similar material types and packaged in waste containers. Waste containers are segregated into waste streams in the Sampling Plan, and waste stream volumes are reported in that document. The time period of waste generation for chloride operations is from 1982 to the present.

Waste generating processes and material inputs:

The primary feed sources for the chloride processes are plutonium residues from pyrochemical operations, metal preparation, metal fabrication, analytical laboratory operations, and residues from other DOE facilities. The overall goal of the chloride operations is to recover plutonium from scrap and residues and produce a purified plutonium oxide for conversion to metal. Processes include pretreatment, dissolution, purification, and hydroxide precipitation.

Attachment 2. Time Lines--Chloride Operations

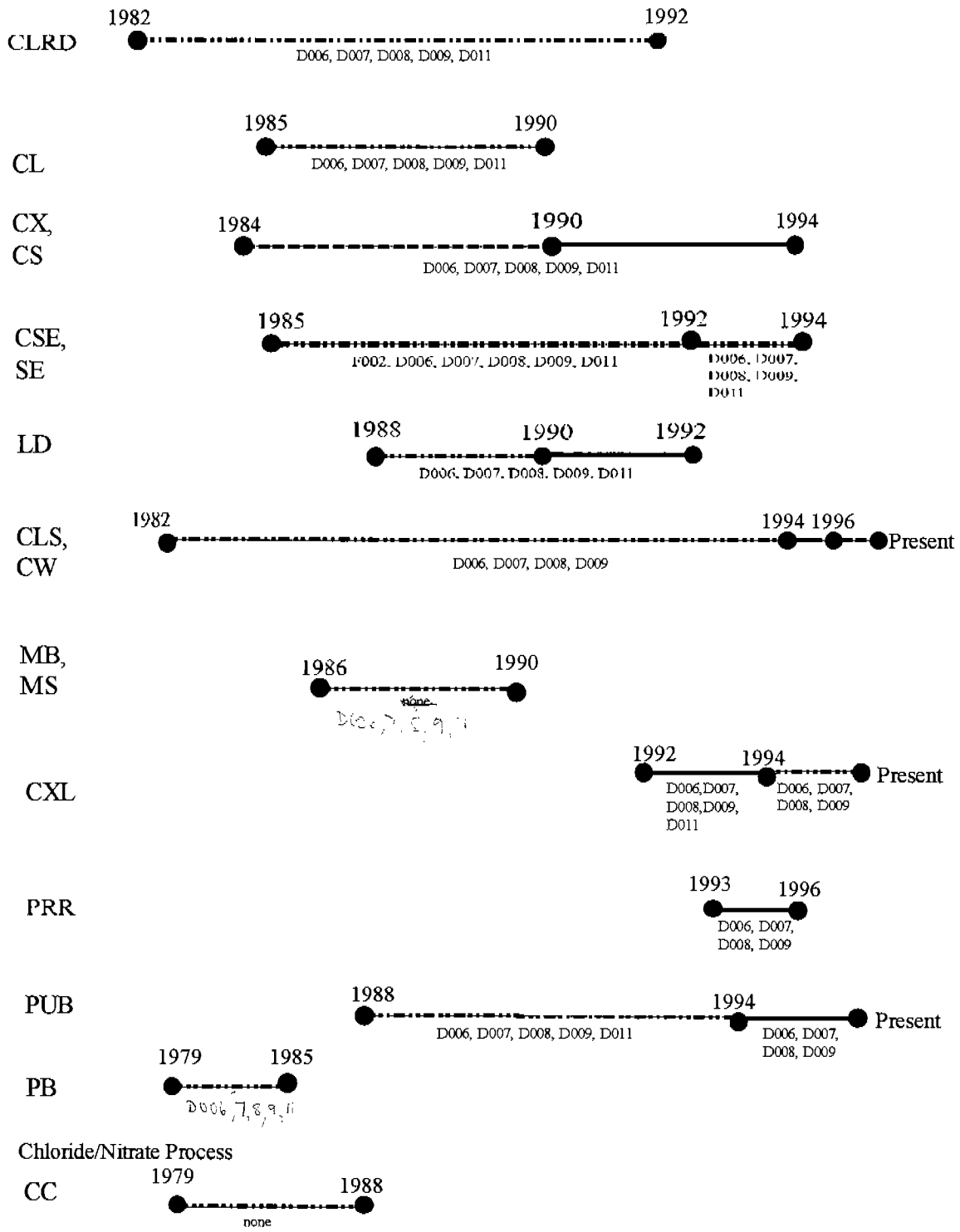

ACCEPTABLE KNOWLEDGE ROADMAP

P/S Codes: CLRD, CL, CX, CS, CSE, SE, CLS, CW, MB, MS, CXL, PRR, PUB, PB, and CC (jointly with nitrate)

Documents are in the TWCP Records Management Center

TWCP Record No.	Information Category Code*	Information	Source	Summary	Limitations
Cl-1/TWCP-3070	b	Waste stream delineation	*Los Alamos National Laboratory Transuranic Waste Characterization Sampling Plan* (TWCP-PLAN-02.7-001,R.0)	Correlations between waste streams from TA-55 with regard to time of generation, waste generating processes, and site-specific facilities	The LANL TRU Waste Characterization Sampling Plan contains information that was extracted from the TRI waste database (CST-14 database). As explained in Section 3 (for retrievably stored waste) and Section 5 (for newly generated waste), the TA-55 controlled database should be used for waste stream characterization.
Cl-2/TWCP-352	b	Description of plutonium recovery processes	Wastes from Plutonium Conversion and Scrap Recovery Operations, LA-11069, March 1988	Document describes the Pu residues and the various treatment approaches used in recovering plutonium from scrap	Document does not give information about RCRA constituents introduced or present in the processes
Cl-3/TWCP-619	d	All TA-55 waste is defense related	Memo from Doug Sankey.	All TA-55 waste is defense related	None
Cl-4/TWCP-698	b	Gives Material Type compositions	NMT memo WM/EC96-032	Gives Material Type compositions	Does not give information on how material may fractionate in TA-55 waste processes
Cl-5/TWCP-882 (UCNI)	d	Secondary Radionuclides and Toxic Metals in TA-55 TRU Waste	Memo from Jim Foxx	Lists additional radionuclides and metals potentially in waste, subdivided by process status code. Covers time period from 1978 to the present.	Best information available, but it is based on worker recollection because other records are not available.
Cl-6/TWCP-3547	c	Developmental Chloride Solvent Extraction Process	Procedure 462-REC, all revisions	Describes development of chloride line processes	Limited information on wastes

TWCP Record No.	Information Category Code*	Information	Source	Summary	Limitations
Cl-7/TWCP-3547	c	Recovery and Purification of Pu from Direct Oxide Reduction (DOR) Salts by Chloride Anion Exchange	Procedure 463-REC, all revision	Process descriptions	Describes only one portion of chloride line; does not address use of RCRA-regulated solvents
Cl-8/TWCP-3547	c	Hydroxide Precipitation of Chloride Solutions Containing Organic Chemicals	Procedure 467-REC, all revisions	Process descriptions	Describes only one portion of chloride line; does not address use of RCRA-regulated solvents
Cl-9/TWCP-3547	c	Dissolution and/or Leaching of Various Materials in HCl	Procedure 470-CLO, all revisions	Process description	Describes only one portion of chloride line
Cl-10/TWCP-3547	c	Oxalate Precipitation of Plutonium from Chloride Solutions	Procedure 471-CLO, all revisions	Process description	Describes only one portion of chloride line
Cl-11/TWCP-3547	c	Chloride Solvent Extraction	Procedure 472-CLO	Process description	Describes only one portion of chloride line; does not address use of RCRA-regulated solvents
Cl-12/TWCP-3547	c	Purification and Recovery of Plutonium by Chloride Anion Exchange	Procedure 473-CLO, all revisions	Process description	Describes only one portion of chloride line
Cl-13/TWCP-3547	c	Hydroxide Precipitation of Chloride Waste Streams	Procedure 474-CLO, all revisions	Process description	Describes only one portion of chloride line
Cl-14/TWCP-3547	c	Recovery of Plutonium from Plutonium-Beryllium Neutron Sources	Procedure 476-CLO, all revisions	Process description	Detail only in decladding operation
Cl-15/TWCP-3547	c	Calcination Operation for Aqueous Chloride Processes	Procedure 477-CLO, all revisions	Process description	Describes only one portion of chloride line
Cl-16/TWCP-3547	c	Dicesium Hexachloro Plutonate	Procedure 478-CLO, all revisions	Process description	Additional step of DCHP precipitation used for certain feed material only
Cl-17/TWCP-3547	c	Head End Processing of Aqueous Chloride Plutonium	Procedure 479-CLO, all revisions	Process description	Does not describe where silver nitrate and potassium chromate are disposed of
Cl-18/TWCP-3547	c	Hydroxide Precipitation of the Plutonium in Chloride Waste	Procedure 481-REC, all revisions	Process description	Describes only one portion of chloride line

TWCP Record No.	Information Category Code*	Information	Source	Summary	Limitations
Cl-19/TWCP-3547	c	Recovery of Plutonium from Hydrochloric CLS-1 Solutions	Procedure 482-REC, all revisions	Process description	Does not address RCRA-regulated solvents
Cl-20/TWCP-3547	c	Decladding of PuBe Neutron Sources	Procedure 482-CLO, all revisions	Process description	Decladding only
Cl-21/TWCP-3547	c	Purification and Recovery of Pu by Chloride Anion Exchange	Procedure 483-CLO, all revisions	Process description	Describes only one portion of chloride line
Cl-22/TWCP-3547	c	Radiochemical Analysis at TA-55	Procedure 029-CST-1, R02	Process description	Feed material only; does not address further processing
Cl-23/TWCP-3547	d	Answers to questions about chloride processes	Interview with Jim Foxx 8/31/99	Answers to questions on Chloride processes	none
Cl-24/TWCP-3547	d	Answers to questions about chloride processes	Interview with Jim Foxx, 9/15/99	Answers to questions on Chloride processes	none
Cl-25/TWCP-3547	d	Answers to questions about chloride processes	Interview with Jim Foxx, 9/23/99	Answers to questions on Chloride processes	none
Cl-26/TWCP-3547	d	Answers to questions about chloride processes	Interview with Tim Hayes, 1/12/00	Answers to questions on Chloride processes	none
Cl-27/TWCP-3547	d	Answers to questions about chloride processes	Interview with Tim Hayes, 6/1/00	Answers to questions on Chloride processes	none

*As defined in TWCP-QP-1.1-021, Section 6.2.4:

a. Forms intended for use in waste certification
b. Data from controlled databases and published documents
c. Unpublished data
d. Interviews, memos, and letters

MAP OF TA-55

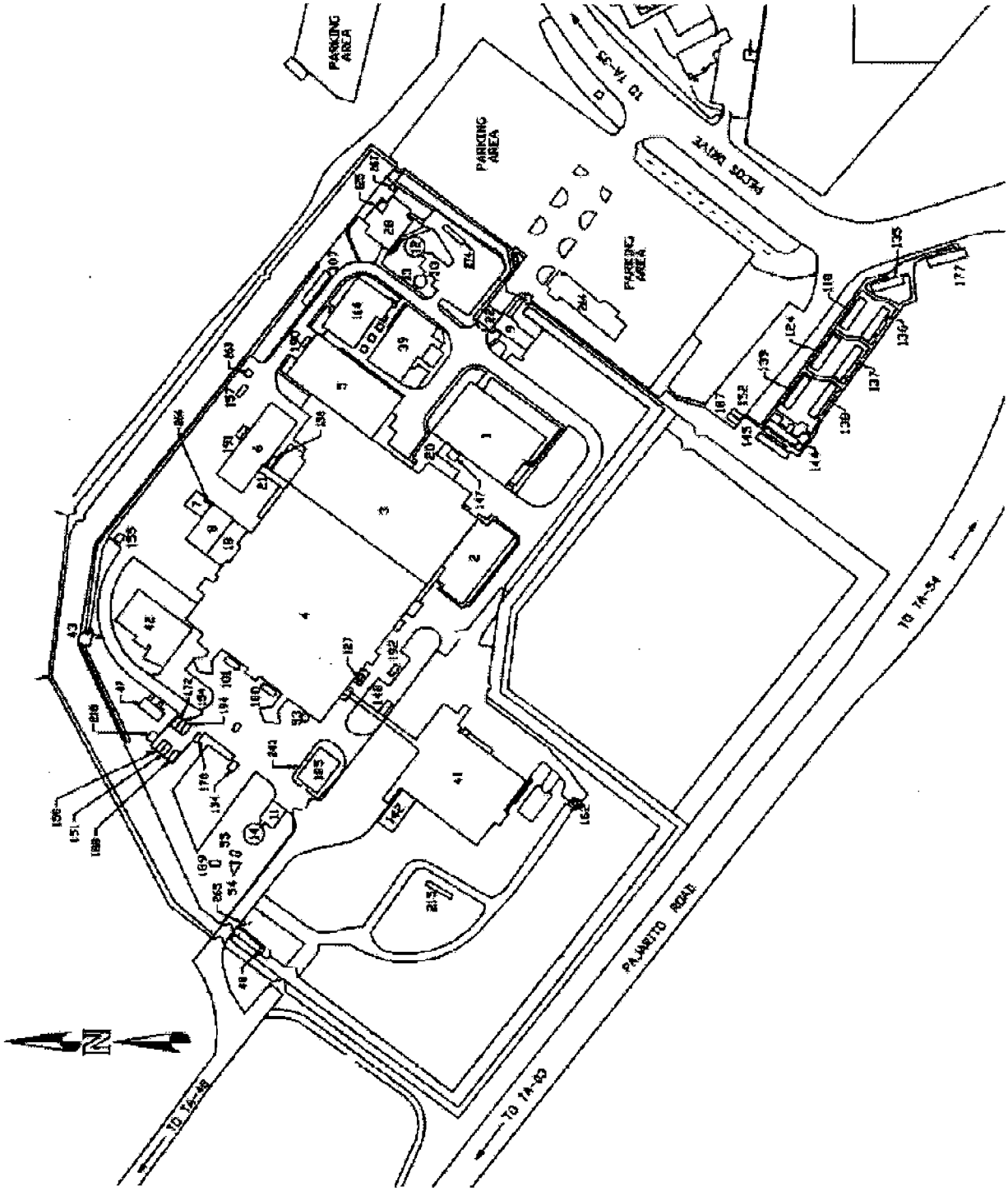
PARKING AREA
PARKING AREA
PARKING AREA
TO TA-35
TO TA-54
TO TA-50
TO TA-48
PAJARITO ROAD
N

P/S Code	P/S Title	Process Inputs		Process Outputs		EPA	References[3]
		Feed Stream(s)	Chemicals/Reagents	Product	Waste Stream[1]	Codes[2]	
CC	Calcination	OY	none	Pu oxide to vault; to P/S code OR	none	none	Cl-26, PAFD 3/85
CL	Crucible Leach	Crucibles	Hydrochloric acid	Pu-enriched solutions to P/S codes SE or CX (chloride line) for further processing; P/S code SP (nitrate line); vault hydroxide cake	1) Crucible pieces to cement fixation (or on occasion, debris waste) 2) Debris waste	D006, D007, D008, D009, D011 ~~none~~	Cl-26, PAFD 10/86
CLRD	Aqueous Chloride R&D	See Chloride Feed Materials list	Hydrochloric acid, other chemicals depending on R&D projects	Pu-enriched solutions to vault; hydroxide cake	~~1) Cement fixation~~ 1) Debris waste	D006, D007, D008, D009, D011 ~~none~~	PAFD 10/90
CLS	Accountable CLS Chloride Solutions	Analytical laboratory sample residues	Magnesium hydroxide, potassium hydroxide, sodium hydroxide	vault; hydroxide cake	~~1) P/S code CF for cement fixation~~ 2) Debris waste	D006, D007, D008 D009 ~~none~~	Cl-15, Cl-20, Cl-27
CS	Chloride Solutions	P/S codes CX, various other feed materials (see list)	Oxalic acid, hydroxylamine hydrochloride, potassium fluoride, sodium hydroxide, sodium bicarbonate, bromocresol purple, silver nitrate, potassium chromate, argon gas, aluminum chloride	vault; hydroxide cake	~~1) Calcined cake~~ occasionally discarded to cement ~~fixation~~ 2) Debris waste	D006, D007, D008, D009, D011 ~~none~~	Cl-26, PAFD 11/86

P/S Code	P/S Title	Process Inputs		Process Outputs		EPA	References[3]
		Feed Stream(s)	Chemicals/Reagents	Product	Waste Stream[1]	Codes[2]	
CSE	Chloride Solvent Extraction	P/S codes CX, CSE, various other feed materials (see list)	Hydrochloric acid, oxalic acid, hydroxylamine hydrochloride, potassium fluoride, calcium carbonate, sodium hydroxide, sodium bicarbonate, bromocresol purple, silver nitrate, potassium chromate, argon gas, aluminum chloride, TCE, TBP	vault ; hydroxide cake	1) Debris waste 2) Liquids absorbed in vermiculite 3) Pieces left after filtration to cement fixation hydroxide cake	F002 ~~F002~~ D006, D007, D008, D009, D011	Cl-26, Cl-27, PAFD 8/89
CX	Chloride Anion Exchange	P/S codes ST, PTP, PK, PRR, OR, EXT, SS	Hydrochloric acid, oxalic acid, hydroxylamine hydrochloride, potassium fluoride, calcium carbonate, sodium hydroxide, sodium bicarbonate, bromocresol purple, silver nitrate, potassium chromate, argon gas, aluminum chloride, sodium nitrite	P/S codes SP or HCD (nitrate line); Pu oxide to vault, recycle back or continue through chloride process	1) Pieces left after filtration to cement fixation 2) Ion exchange resins to cement fixation 3) Debris waste	D006, D007, D008, D009, D011 ~~D006, D007, D008, D009, D011~~ ~~none~~	Cl-10, Cl-12, Cl-17, Cl-21, Cl-27

P/S Code	P/S Title	Process Inputs		Process Outputs		EPA	References[3]
		Feed Stream(s)	Chemicals/Reagents	Product	Waste Stream[1]	Codes[2]	
CXL	Experimental Chloride Extraction Line	See Chloride Feed Material list; note no RCRA-regulated solvents used after 1992.	Hydrochloric acid, oxalic acid, calcium carbonate, magnesium hydroxide, potassium hydroxide, sodium hydroxide, bromocresol purple, ferrous chloride, stannous chloride, calcium fluoride, sodium nitrite, cesium chloride, argon gas, aluminum chloride	P/S codes SP, CR, LR, DS, or NR (all nitrate line); recycle back or continue through chloride process; vault	1) Pieces left after filtration to cement fixation (or occasionally, debris waste) 2) Ion exchange resins to cement fixation 3) Debris waste	~~none~~ D006, D007, D008 D009 ~~none~~	Cl-10, Cl-12, Cl-13, Cl-15, Cl-16, Cl-19, Cl-21
CW	Caustic Waste	P/S codes CLS, CSE, other chloride solutions	Calcium or sodium or potassium hydroxide	P/S code HCD (nitrate line) or vault	1) Debris waste	~~none~~ D006 D008	Cl-26, Cl-27, PAFD 10/86
LD	Chloride Leach & Dissolution	P/S code SS; also see Chloride Feed Materials list	Hydrochloric acid	P/S code CX (chloride line); SP (nitrate line); Pu oxide to vault	1) Pieces left after filtration to cement fixation (or occasionally, debris waste) 2) Debris waste	D006, D007, D008, D009, D011 ~~none~~	Cl-26, PAFD 9/88
MB	Nitric Dissolution of Molten Salts	Molten salts	Hydrochloric acid, nitric acid	P/S codes SE or CS (chloride line), LR or CN or PS (nitrate line)	1) Debris waste	~~none~~ D006 7 8 9 11	Cl-26, PAFD 10/86
MS	Molten Salts Purification Dissolution	Molten salts	Hydrochloric acid	P/S code SE (chloride line); Pu oxide to vault	1) Debris waste	~~none~~ D006 7 8 9 11	Cl-26, PAFD 6/85

P/S Code	P/S Title	Process Inputs		Process Outputs		EPA	References[3]
		Feed Stream(s)	Chemicals/Reagents	Product	Waste Stream[1]	Codes[2]	
PB	Pu-Be Source Recovery	Pu-Be sources	Hydrochloric acid, sodium nitrite, DCHP, oxalic acid, potassium hydroxide, silver nitrate, hydroxylamine hydrochloride, bromocresol purple, sodium bicarbonate, potassium dichromate, hydrofluoric acid, calcium carbonate, stannous chloride, aluminum chloride	P/S codes CXL (recycle back through chloride line); P/S codes HCD, CD (nitrate line) (hydroxide cake)	1) Metal cladding to metals waste stream 2) Pieces left after filtration to cement fixation 3) Debris waste	none D006, D007, D008, D009, D011 ~~none~~	Cl-20, Cl-21
PRR	Pyrochemical Residue Recovery	See Chloride Feed Materials list	Hydrochloric acid, oxalic acid, calcium carbonate, magnesium hydroxide, potassium hydroxide, sodium hydroxide, bromocresol purple, argon gas, aluminum chloride	P/S codes CX, CXL (chloride line); P/S code SP (nitrate line) (hydroxide cake), vault	1) Pieces left after filtration to cement fixation 2) Ion exchange resins to cement fixation 3) Debris waste	D006, D007, D008, D009, D011 ~~D006, D007, D008, D009, D011~~ ~~none~~	Cl-15, Cl-19, Cl-21

P/S Code	P/S Title	Process Inputs		Process Outputs		EPA	References[3]
		Feed Stream(s)	Chemicals/Reagents	Product	Waste Stream[1]	Codes[2]	
PUB	Pu/Be Source Recovery	Pu-Be sources	Hydrochloric acid, sodium nitrite, DCHP, oxalic acid, potassium hydroxide, silver nitrate, hydroxylamine hydrochloride, bromocresol purple, sodium bicarbonate, potassium dichromate, hydrofluoric acid, calcium carbonate, stannous chloride, aluminum chloride	P/S codes CXL (chloride line); P/S codes HCD; CD (nitrate line) (hydroxide cake)	1) Metal cladding to metals waste stream 2) Pieces left after filtration to cement fixation 3) Debris waste	none D006, D007, D008, D009, D011 ~~none~~	Cl-14, Cl-20, Cl-21
SE	Solvent Extraction	P/S codes PK, LD, CS, PTP	Hydrochloric acid, oxalic acid, hydroxylamine hydrochloride, potassium fluoride, calcium carbonate, sodium hydroxide, sodium bicarbonate, bromocresol purple, silver nitrate, potassium chromate, argon gas, aluminum chloride, TCE, TBP, CMPO	P/S code CS (chloride line), vault; hydroxide cake	1) Debris waste 2) Liquids absorbed in vermiculite 3) Pieces left after filtration to cement fixation	F002 ~~F002~~ D006, D007, D008, D009, D011	Cl-26, Cl-27, PAFD 11/86

[1]All P/S codes generate routine laboratory debris waste consisting of glassware, plastics, ceramic materials, paper, rags, HEPA filters, metal containers, brushes, and small tools. Leaded gloves may also be generated and are segregated.

[2] All P/S codes have the potential to generate leaded gloves. The gloves are segregated from other debris waste and are assigned EPA hazardous waste code D008. The D008 code is assigned to the leaded gloves waste stream rather than to each P/S code waste stream.

[3] Refer to the Acceptable Knowledge Roadmap in Attachment 3.

LIST OF CHLORIDE OPERATIONS FEED MATERIALS

- impure Pu metal
- pyrochemical salts
- crucible pieces (tantalum, magnesium oxide)
- impure metals, including cadmium, mercury, zinc, chromium
- anode heels
- oxides
- hydroxides
- Pu-Be sources and turnings
- stainless steel and/or tantalum residues from decladding of Pu-Be sources
- analytical laboratories (CLS-1, etc.) solutions

Attachment 6. Simplified Schematic of Chloride Line

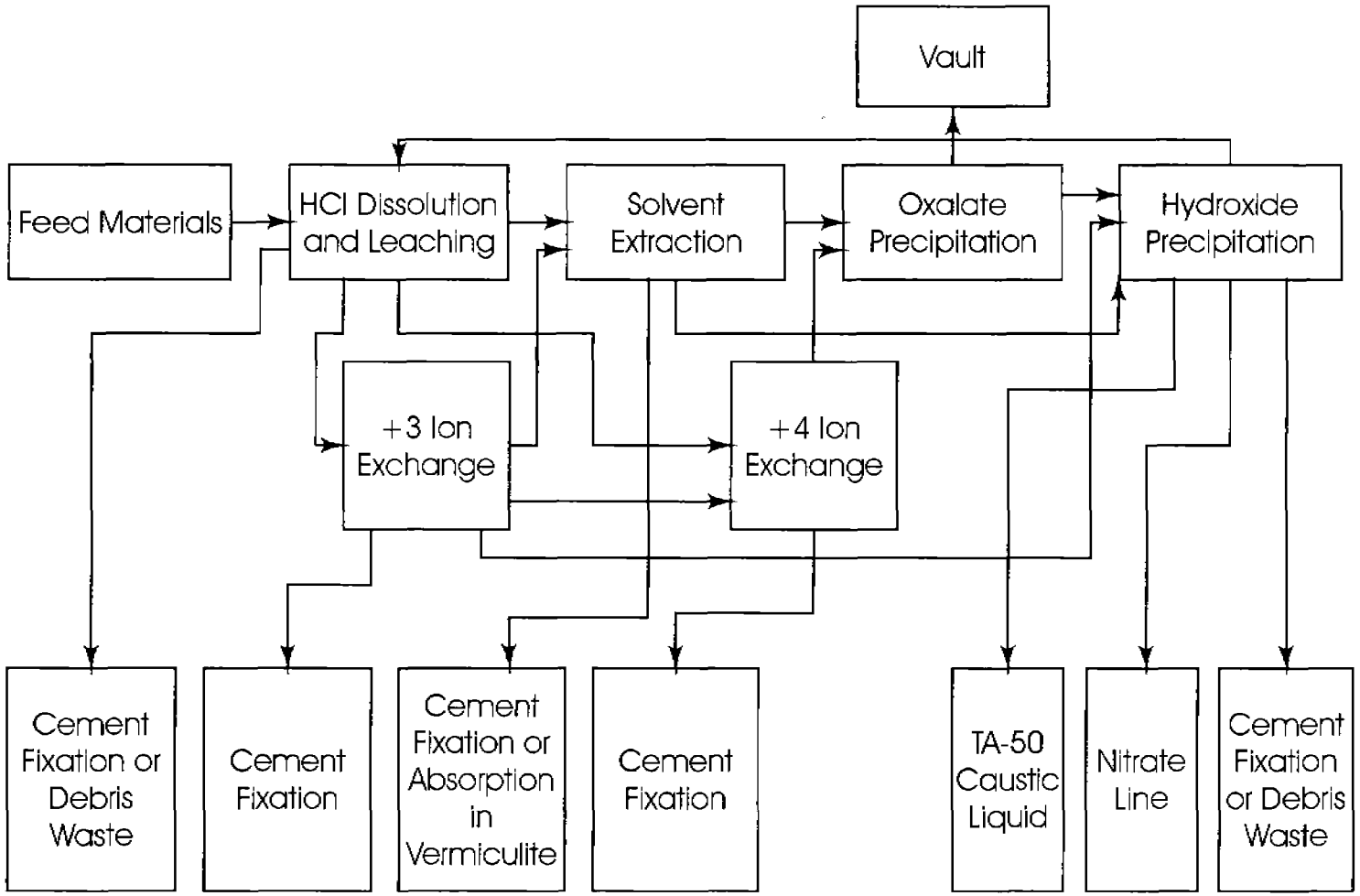

~~DRAFT~~

Los Alamos National Laboratory
Transuranic Waste Characterization/Certification Project

PROCESS ACCEPTABLE KNOWLEDGE REPORT FOR CHLORIDE OPERATIONS AT TA-55

LA-UR 0000000

Date: 06/21/00

Process/Status Codes:

CLRD, CL, CX, CS, CSE, SE, CLS, CW, MB, MS,
CXL, PRR, PUB, PB, and CC (jointly with nitrate)

chloride Operations.doc

03 03 04

CONTENTS

SECTION PAGE

ACRONYMS iii

INTRODUCTION 1

1.0 METHODOLOGY OF AK INFORMATION SEARCH 1

2.0 DESCRIPTION OF CHLORIDE OPERATIONS PROCESSES 1
- 2.1 Facility and Mission 1
- 2.2 Waste Physical Form and Content Description 1
- 2.3 Waste Volume and Time Period of Generation 2
- 2.4 Waste Stream Generation Process 2
  - 2.4.1 Overview 2
  - 2.4.2 Process Descriptions 2
  - 2.4.3 Process Flow Diagrams 5
- 2.5 Material Inputs to the Waste Generation Process 5
  - 2.5.1 Physical Waste Form Identification 5
  - 2.5.2 Radionuclide Content Identification 5
  - 2.5.3 Chemical Content Identification 5

3.0 ASSIGNMENT OF EPA HAZARDOUS WASTE NUMBERS 6
- 3.1 F, K, and P Listings 6
- 3.2 Toxicity 6
- 3.3 Corrosivity, Reactivity, and Ignitability 6

4.0 VERIFICATION THAT IGNITABLE, REACTIVE AND CORROSIVE WASTES WERE EXCLUDED 6

5.0 VERIFICATION THAT INCOMPATIBLE CHEMICALS WERE PROHIBITED 6

6.0 VERIFICATION THAT THERE ARE NO COMPRESSED GASES, FREE LIQUIDS, NONRADIONUCLIDE PYROPHORICS, SEALED CONTAINERS GREATER THAN FOUR LITERS IN VOLUME, NOR >1% RADIONUCLIDE PYROPHORICS 7

7.0 VERIFICATION THAT THERE ARE NO POLYCHLORINATED BIPHENYLS (PCBs) 7

XX DETERMINATION OF THE MAXIMUM NUMBER OF CONFINEMENT LAYERS PERMITTED FOR WASTE PACKAGING ..... ????? no this document!

8.0 DETERMINATION OF THE RADIONUCLIDE ISOTOPIC COMPOSITION 7

9.0 PACKAGING 7

ATTACHMENTS

1 AK Summary (1 page)
2 Time Lines—Chloride Operations (1 page)
3 Acceptable Knowledge Roadmap (3 pages)
4 Map of TA-55 (1 page)
5 Process Input/Output Table and List of Feed Materials (2 pages)
6 Simplified Schematic of Chloride Line (1 page)

CFR Code of Federal Regulations

ACRONYMS

AK	acceptable knowledge
DOE	U.S. Department of Energy
EPA	U.S. Environmental Protection Agency
LANL	Los Alamos National Laboratory
PAFD P&D P/S [code]	process/status [code]
RCRA	Resource Conservation and Recovery Act
RMDC	Records Management/Document Control
SAR	safety analysis report
SOP	safe operating procedure
TA	technical area
TRU	transuranic
TWCP	Transuranic Waste Characterization/Certification Project
WAC	waste acceptance criteria
WIPP	Waste Isolation Pilot Plant
WIPP WAP	Attachment B, Waste Analysis Plan, to the *Hazardous Waste Facility Permit Issued to the Waste Isolation Pilot Plant* (EPA No. NM4890139088)
WODF	Waste Origination and Disposition Form

Sampling Plan

DRAFT ACCEPTABLE KNOWLEDGE ~~SUPPLEMENTAL INFORMATION~~ REPORT FOR ~~TA-55~~ CHLORIDE OPERATIONS AT TA-55

INTRODUCTION

All transuranic (TRU) waste must be sufficiently characterized and certified before it is shipped to the Waste Isolation Pilot Plan (WIPP). The U.S. Environmental Protection Agency (EPA) allows use of acceptable knowledge (AK) for waste characterization. EPA uses the term AK in its guidance document, *Waste Analysis at Facilities that Generate, Treat, Store and Dispose of Hazardous Waste.* Attachment B, Waste Analysis Plan, to the *Hazardous Waste Facility Permit Issued to the Waste Isolation Pilot Plant* (EPA No. NM4890139088) (WIPP WAP) defines AK and provides guidelines on how AK should be obtained and documented. ~~This AK supplemental information has been prepared in accordance with *Acceptable Knowledge Documentation* (TWCP-QP-1.1-021).~~

1.0 METHODOLOGY OF AK INFORMATION SEARCH

The AK search for the information related to waste streams resulting from chloride operations covered:

- Review of the *Los Alamos National Laboratory Transuranic Waste Characterization Sampling Plan* (TWCP-PLAN-0.2.7-001) (Sampling Plan) that includes information regarding all waste streams
- Review of documents related to the waste generation and waste management activities at TA-55 as listed on the Acceptable Knowledge Roadmap (Attachment 3) (safety analysis reports [SARs], safe operating procedures [SOPs], reports, memos, etc.)
- Interviews with personnel involved with waste generation and waste management at TA-55 as listed on the Acceptable Knowledge Roadmap
- Analysis of processes generating waste, including in-process sampling and testing.

The Transuranic Waste Characterization/Certification Project (TWCP) Records Management/Document Control (RMDC) Center contains copies of the documents referenced in this report.

2.0 DESCRIPTION OF CHLORIDE OPERATIONS PROCESSES

The following sections describe chloride operations processes, and identify the resulting wastes as well as outputs that are sent to other operations, such as nitrate operations, for further processing.

2.1 Facility and Mission

The TA-55 Plutonium Reprocessing facility processes plutonium from residues generated through the defense complex into pure plutonium feedstock. The waste streams generated at the TA-55 Plutonium Reprocessing facility as waste from chloride process operations to reprocess/recover plutonium are entirely defense related (TWCP-614). These waste streams were generated at building PF-4 of the TA-55 plutonium facility. A map of the TA-55 facility is attached to this report (Attachment 4).

2.2 Waste Physical Form and Content Description

Wastes generated during chloride operations, primarily debris wastes and wastes entered into the cement fixation process, are covered by this Draft Acceptable Knowledge ~~Summary~~ Report. They are identified by having the process status codes for chloride operations: CLRD, CL, CX, CS, CSE, SE, CLS, CW, MB,

MS, CXL, PRR, PUB, and PB; CC applies to both chloride and nitrate operations. General debris waste categories include

- Cellulose-based waste (for example, paper, cloth)
- Plastic-based waste (for example, gloves, tape)
- Rubber
- Metal debris (for example, wire, hose clamps, tools)
- Glass debris
- Steel packaging materials

These debris items are contaminated with small amounts of material from chloride operations.

2.3 Waste Volume and Time Period of Generation

process/status Resource Conservation and Recovery Act

This report covers waste streams generated from 1982, when the chloride line was first developed, to the present. Wastes generated in the chloride operations have P/S codes CLRD, CL, CX, CS, CSE, SE, CLS, CW, MB, MS, CXL, PRR, PUB, and PB; CC applies to both chloride operations and nitrate operations. Wastes from the chloride operations have different associated RCRA codes depending on the time period they were generated. The P/S codes, their time period of generation, and corresponding RCRA codes are shown graphically in Attachment 2, Time Lines—Chloride Operations.

Waste volumes for each P/S code have not been tracked. Instead, waste items are segregated into similar material types and packaged in waste containers. Waste containers are segregated into waste streams in the Sampling Plan, and waste stream volumes are reported in that document.

2.4 Waste Stream Generation Process

The following sections describe the generation of waste streams as well as outputs to the nitrate operation.

2.4.1 Overview

spell out

Manufacturing and research operations performed at TA-55 in the production of plutonium result in the production of plutonium-contaminated scrap and residues. These residues are processed to recover as much plutonium as is practical (TWCP-352). TA-55 has extensive capabilities for the extraction and recovery of plutonium from residues and scraps generated from operations at various LANL facilities and other U.S. Department of Energy (DOE) sites. These recovery operations, as well as associated maintenance operations, and TA-55 plutonium research are the sources of TRU waste generated at TA-55. Keep to sentence

2.4.2 Process Descriptions

Detailed information about the TA-55 plutonium recovery processes can be found in *Waste from Plutonium Conversion and Scrap Recovery Operations* (TWCP-352). In general, TA-55 plutonium recovery processes can be divided into three major process lines:

- Aqueous chloride-based processes
- Aqueous nitrate-based processes
- Pyrochemical operations

This report concerns only the first of these, the aqueous chloride-based process line.

The primary feed sources for the chloride processes are plutonium residues from pyrochemical operations, metal preparation, metal fabrication, analytical laboratory operations (see below), and residues from other DOE facilities. The overall goal of the chloride operations is to recover plutonium from scrap and residues and produce a purified plutonium oxide for conversion to metal.

As mentioned above, analytical laboratory operations are one feed into the chloride operations. Samples from the various stages of the production of plutonium are sent for chemical (e.g., radiochemical) analyses. After analysis, excess samples that are either an intermediate or direct product having considerable value, and sample residues rich in plutonium, are returned to TA-55 as feedstock for the production of plutonium metals and oxides. The solvents used in some of the analytical analyses do not carry over an RCRA F listing designation because the sample residues are not a solid waste and are considered feedstock.

Chloride operations can be broken down into the following process steps:

- Pretreatment
- Dissolution
- Purification
- Hydroxide Precipitation

Each of these process steps is described below. A complete listing of P/S codes, their descriptions, and their inputs and outputs is found in Attachment 5, along with a list of feed materials into the chloride process. A simplified schematic diagram of chloride operations is found in Attachment 6.

2.4.2.1 Pretreatment (P/S codes CR, PB, PUB)

remove underlined.

Pretreatment includes primarily physical processes used to prepare scrap and residues for dissolution. Pretreatment may include sorting, crushing, and/or pulverizing (P/S code CR; see Nitrate Operations Report). As materials are received from various areas in TA-55, they are sorted and sent to various other pretreatment processes or directly to dissolution, depending on the physical nature of the scrap or residue, and the amount and type of plutonium associated with the material. Acceptable Knowledge

A separate pretreatment procedure is the decladding of plutonium-beryllium sources (P/S codes PB, PUB; references Cl-14, Cl-20, Cl-21). The metal is removed from the sources, and is placed into containers with metal from all other PF-4 operations (the metals waste stream; not a chloride operations waste). The Pu-Be sources, after the cladding has been removed, are entered into the chloride line for plutonium recovery along with other materials. The P/S code for the decladding and processing of the Pu-Be sources in the chloride line was PB prior to 1988, and PUB from 1988 to the present.

2.4.2.2 Dissolution (P/S codes CLRD, CX, CXL, CL, LD, CLS)

In general, the dissolution step can be described as the use of hydrochloric acid to leach and dissolve plutonium from scrap, crucibles, residues, and various solutions, including solutions from the analytical chemistry laboratory known at different times as CHM-1, CLS-1, CST-1, and NMT-1. The scrap and residues may include lead, cadmium, mercury, and chromium from feed materials (see Attachment 5), as well as from the stainless steel and shielding used in the chloride operations equipment (reference Cl-27).

The chloride line was developed in 1982, and operated under P/S code CLRD until 1984; as P/S code CX (along with other more feed-specific codes described below) until 1994; and as P/S code CXL from 1994 to the present.

NOTE: After dissolution, if a plutonium-containing solution contained too much iron for the solvent extraction process, it went to +3 ion exchange (not to be confused with the +4 ion exchange as a part of purification) as an intermediate step prior to entering the purification phases of chloride operations.

Some P/S codes were used for dissolution of specific feed materials. CL, used from 1985 to 1990, applied to crucible leaching in HCl. LD, used from 1988 to 1992, applied to the dissolution step for most materials but specifically excluded solutions from the analytical laboratory (CLS-1, etc.). P/S codes MB and MS, 1985-1990, were used for molten salts/pyrochemical salts dissolution only. CLS was used when solutions from the analytical laboratory were the only feed material.

Waste solids from HCl dissolution generally went to cement fixation, but on occasions to debris waste (reference Cl-26).

2.4.2.3 Purification (P/S codes CX, CS, CSE, SE, CL, CLS, MB, MS, PRR, PB, and PUB)

The purification steps in the chloride line may include solvent extraction, ion exchange, and oxalate precipitation, depending on the chemical nature of the solutions to be purified.

Solvent extraction (P/S codes CSE and SE) has been used in the chloride line since 1985 (references Cl-26, Cl-27). The RCRA-regulated solvent, tetrachloroethylene (F002), was used in the solvent extraction process until 1992. Debris waste from the solvent extraction process up until 1992 therefore carries the EPA code F002, as do liquid wastes absorbed in vermiculite. However, pieces left after filtration in the hydrochloric acid dissolution step are removed from the line prior to solvent extraction, so do not carry the F002 designation (see Attachment 6, Simplified Schematic of the Chloride Line).

Silver nitrate titration was used to determine chloride concentration (also resulting in formation of potassium chromate) in both the solvent extraction and ion exchange processes up until 1992, so the RCRA codes D011 and D006 are applied to all the codes listed in this paragraph during this time period.

The chloride line was halted from 1992 until 1994. When it resumed operation, non-RCRA-regulated solvents replaced the TCE used in solvent extraction, and silver nitrate titration was no longer performed. P/S code CXL was initiated to denote the newly operational chloride line.

During the operation of the chloride line, some leaching of chromium from the stainless steel equipment, and lead and cadmium from shielding, always occurs, and mercury (from feed materials) is present as well (reference Cl-27). These metals end up in the cement-fixated waste from chloride operations, and when analyses have been run on these wastes, they were over RCRA limits (reference Cl-27). Therefore, cemented wastes from the chloride line carry the RCRA codes for these metals, except for P/S codes MB and MS since there is no cemented waste from these P/S codes (reference Cl-26).

Ion exchange columns (+3 and +4) are used to collect plutonium and separate out impurities such as americium and uranium (P/S codes CX, CXL, and PRR). When discarded, the resins carry the EPA codes D006-D009 for the cadmium, chromium, lead, mercury, and prior to 1994, D011 for silver.

The enriched plutonium solutions from solvent extraction or ion exchange are treated with oxalic acid (oxalate precipitation) (P/S codes CS, CSE, CX, CXL, PB, PUB, and SE), and the resulting plutonium precipitate goes to be calcined (P/S code CC) and eventually to the vault. The liquid solution goes to hydroxide precipitation.

2.4.2.4 Hydroxide Precipitation (P/S codes CLS, CW, PRR)

In this step, the solutions from purification steps are precipitated with potassium, magnesium, or sodium hydroxide. The resulting enriched cakes (greater than economic discard level) go to nitrate operations for further processing (see Time Lines in Attachment 2 for P/S codes and corresponding RCRA codes). The hydroxide cake (lower than economic discard level) fines were cemented until 1995, with large chunks of hydroxide filtrate cakes (lower than economic discard level) placed into containers for disposal. Based on a revision to the WIPP WAC in 1995, all cake material lower than a revised economic discard level is containerized for disposal as debris waste. Waste caustic liquid meeting the TA-50 WAC is disposed through the caustic waste line. P/S code CW was used from 1985 to 1992 for feed materials specifically containing analytical laboratory (CLS-1, etc.) solutions as feed material. Occasionally, solutions from hydroxide precipitation are returned to HCl dissolution for reprocessing (see Attachment 6); RCRA code assignments would then be reflected through other P/S codes.

2.4.3 Process Flow Diagrams

A simplified process flow diagram of the TA-55 chloride operations is included as Attachment 6 to this report. Individual PAFDs for the chloride P/S codes are included in the procedures referenced in the AK Roadmap found in Attachment 3.

2.5 Material Inputs to the Waste Generation Process

The material inputs to waste from chloride operations are described below.

2.5.1 Physical Waste Form Identification

Since items from several different processes are usually combined into one waste drum, the physical waste form of each drum must be determined independently. The physical description of each waste item generated is documented on a Waste Origination and Disposition Form (**WODF**) by the waste generator according to controlled procedures. The P/S code for each waste item is also documented on this form

For chloride operations, waste consists primarily of debris and cemented waste.

2.5.2 Radionuclide Content Identification

The primary plutonium material type inputs for chloride operations at TA-55 are listed in TWCP-698 (see Attachment 3, AK Roadmap). The material type provides the major radionuclide components of the waste and yields an estimated Am-241 content by calculation. However, some of the plutonium recovery processes separate plutonium and americium, so that their ratios may be altered in the outputs from the processes. According to TWCP-882, waste items from P/S code CXL may be either depleted or enriched in americium depending on whether the source of contamination is the process product or the process residues; however, in general, the waste will be enriched in americium (reference Cl-26). Individual waste packages undergo gamma spectroscopy to provide detailed radionuclide characterization information.

2.5.3 Chemical Content Identification

The chemical content of waste from the chloride processes is in the form of debris waste, cemented waste, or occasionally pieces of hydroxide cake, which consist primarily of salts such as potassium chloride, sodium chloride, and calcium chloride and are entered into the cement fixation process or debris waste

(reference Cl-26). In addition, caustic solutions from hydroxide precipitation are discarded through the waste line to TA-50. A table listing all P/S codes, their descriptions, and their inputs/outputs is provided in Attachment 5.

3.0 ASSIGNMENT OF EPA HAZARDOUS WASTE NUMBERS

The assignment of EPA hazardous waste codes is described below.

3.1 F, K, and P Listings

As described in Sections 2.3 and 2.4 of this report, the F002 code is assigned only to debris waste and waste absorbed in vermiculite from the solvent extraction process, up until 1992. After 1994, no F coded waste resulted from chloride operations. No K or P codes are assigned to chloride operations waste.

3.2 Toxicity

As outlined in Section 2.3 and 2.4 of this report, cemented wastes and ion exchange resins from the chloride line from 1982 through 1992 are assigned the toxicity characteristic codes D006, D007, D008, D009, and D011 for cadmium, chromium, lead, mercury, and silver. After 1992, the code for silver (D011) was removed from the waste due to a process change (reference Cl-23). An exception for P/S codes MB and MS is described in the sections referenced above, and is shown on the Time Lines in Attachment 2.

3.3 Corrosivity, Reactivity, and Ignitability

See Section 4.0.

4.0 VERIFICATION THAT IGNITABLE, REACTIVE, AND CORROSIVE WASTES WERE EXCLUDED

See Section 5.0.

5.0 VERIFICATION THAT INCOMPATIBLE CHEMICALS WERE PROHIBITED

All waste containers shipped from TA-55 to TA-54 for storage were evaluated for potentially incompatible chemicals per 49 CFR Section 177.848, and were determined to be in compliance with this requirement.

In addition, since 1987, waste generators sign a statement on the WODF stating that the waste contains "no free liquids, pyrophorics, explosives, compressed gases, powders, or materials other than the indicated matrix."

Also, the Waste Profile Request Forms (used after 1991) include statements that the waste related to chloride operations is not ignitable (flash point >200 F), reactive, or corrosive (not applicable for solid [physical form] waste).

6.0 VERIFICATION THAT THERE ARE NO COMPRESSED GASES, FREE LIQUIDS, NONRADIONUCLIDE PYROPHORICS, SEALED CONTAINERS GREATER THAN 4 L IN VOLUME, NOR >1% RADIONUCLIDE PYROPHORICS

Verification that individual waste drums do not contain compressed gases, free liquids, or sealed containers greater than 4 L in volume must be obtained from radiography. For pyrophorics, see Section 5.0.

7.0 VERIFICATION THAT THERE ARE NO PCBs

POLYCHLORINATED BIPHENYLS

No PCBs were introduced into the chloride operations, as documented in the TA-55 procedures.

8.0 DETERMINATION OF THE RADIONUCLIDE ISOTOPIC COMPOSITION

See Section 2.5.2.

9.0 PACKAGING

Waste packaging information will be addressed in a separate report. The waste packaging report will describe packaging configurations, packaging materials, layers of confinement, and types of inner-layer closure. The report will summarize waste packaging operations applicable to all processes at TA-55.

ACCEPTABLE KNOWLEDGE SUMMARY

WSPR No. _____

P/S Codes: CLRD, CL, CX, CS, CSE, SE, CLS, CW, MB, MS, CXL, PRR, PUB, PB, and CC (jointly with nitrate)

Site: LANL

Facility Mission (including defense and non-defense programs):

The TA-55 Plutonium Reprocessing facility processed Pu-239 from residues generated throughout the defense complex into pure plutonium feedstock. The waste streams from P/S codes CLRD, CL, CX, CS, CSE, SE, CLS, CW, MB, MS, CXL, PRR, PUB, PB, and CC (jointly with nitrate) were generated at the TA-55 Plutonium Reprocessing facility from chloride operations for plutonium recovery and purification.

Description of the waste stream:

Waste from chloride operations consists primarily of debris waste, including cellulose-based waste, plastic-based waste, rubber, metal debris, glass debris, and steel packaging materials, and waste sent for cement fixation.

Area(s) or building(s) where the waste stream was generated (including operations carried out in those areas):

Chloride operations wastes are generated at the PF-4 wing, Room 420, of the TA-55 plutonium facility. Manufacturing and research operations performed at TA-55 in the production of plutonium result in the production of plutonium-contaminated scrap and residues. These residues are processed to recover as much plutonium as is practical. TA-55 has extensive capabilities for the extraction and recovery of plutonium from residues and scraps generated from operations at various LANL facilities and other DOE sites. These recovery operations, as well as associated maintenance operations, and TA-55 plutonium research are the sources of TRU waste generated at TA-55.

Waste stream volume and time period of generation:

Waste volumes for each P/S code have not been tracked. Instead, waste items are segregated into similar material types and packaged in waste containers. Waste containers are segregated into waste streams in the Sampling Plan, and waste stream volumes are reported in that document. The time period of waste generation for chloride operations is from 1982 to the present.

Waste generating processes and material inputs:

The primary feed sources for the chloride processes are plutonium residues from pyrochemical operations, metal preparation, metal fabrication, analytical laboratory operations, and residues from other DOE facilities. The overall goal of the chloride operations is to recover plutonium from scrap and residues and produce a purified plutonium oxide for conversion to metal. Processes include pretreatment, dissolution, purification, and hydroxide precipitation.

PAM: Since this may be a stand alone document, should I redefine Acronyms? or spell them out?

TIME LINES

ACCEPTABLE KNOWLEDGE ROADMAP

P/S Codes: CLRD, CL, CX, CS, CSE, SE, CLS, CW, MB, MS, CXL, PRR, PUB, PB, and CC (jointly with nitrate)

Documents are in the TWCP Records Management Center.

AK Binder/ TWCP Number	Information Category Code*	Information	Source	Summary	Limitations
Cl-1 (TWCP-PLAN-02.7-0001,R.2) √	b	Waste stream delineation	*LANL TRU Waste Characterization Sampling Plan* (TWCP-PLAN-02.7-0001)	Correlations between waste streams from TA-55 with regard to time of generation, waste generating processes, and site-specific facilities	The LANL TRU Waste Characterization Sampling Plan contains information that was extracted from the TRI waste database (CST-14 database). As explained in Section 3 (for retrievably stored waste) and Section 5 (for newly generated waste), the TA-55 controlled database should be used for waste stream characterization.
Cl-2 √ (TWCP-352)	b	Description of plutonium recovery processes	Wastes from Plutonium Conversion and Scrap Recovery Operations, LA-11069, March 1988	Document describes the Pu residues and the various treatment approaches used in recovering plutonium from scrap	Document does not give information about RCRA constituents introduced or present in the processes
Cl-3 not in text (TWCP-~~619~~ 614) should this be 614?	d	All TA-55 waste is defense related	Memo from Doug Sankey.	All TA-55 waste is defense related	None
Cl-4 √ (TWCP-698)	b	Gives Material Type compositions	NMT memo WM/EC96-032	Gives Material Type compositions	Does not give information on how material may fractionate in TA-55 waste processes
Cl-5 √ (TWCP-882) UCNI	d	Secondary Radionuclides and Toxic Metals in TA-55 TRU Waste	Memo from Jim Foxx	Lists additional radionuclides and metals potentially in waste, subdivided by process status code. Covers time period from 1978 to the present.	Best information available, but it is based on worker recollection because other records are not available.
Cl-6 √	c	Developmental Chloride Solvent Extraction Process	Procedure 462-REC, all revisions	Describes development of chloride line processes	Limited information on wastes

Should UPP WAC & TA-55 WAC be listed here?
How come most of this is not referenced in text?

AK Binder/ TWCP Number	Information Category Code*	Information	Source	Summary	Limitations
Cl-7	c	Recovery and Purification of Pu from Direct Oxide Reduction (DOR) Salts by Chloride Anion Exchange	Procedure 463-REC, all revision	Process descriptions	Describes only one portion of chloride line; does not address use of RCRA-regulated solvents
Cl-8	c	Hydroxide Precipitation of Chloride Solutions Containing Organic Chemicals	Procedure 467-REC, all revisions	Process descriptions	Describes only one portion of chloride line; does not address use of RCRA-regulated solvents
Cl-9	c	Dissolution and/or Leaching of Various Materials in HCl	Procedure 470-CLO, all revisions	Process description	Describes only one portion of chloride line
Cl-10	c	Oxalate Precipitation of Plutonium from Chloride Solutions	Procedure 471-CLO, all revisions	Process description	Describes only one portion of chloride line
Cl-11	c	Chloride Solvent Extraction	Procedure 472-CLO	Process description	Describes only one portion of chloride line; does not address use of RCRA-regulated solvents
Cl-12	c	Purification and Recovery of Plutonium by Chloride Anion Exchange	Procedure 473-CLO, all revisions	Process description	Describes only one portion of chloride line
Cl-13	c	Hydroxide Precipitation of Chloride Waste Streams	Procedure 474-CLO, all revisions	Process description	Describes only one portion of chloride line
Cl-14	c	Recovery of Plutonium from Plutonium-Beryllium Neutron Sources	Procedure 476-CLO, all revisions	Process description	Detail only in decladding operation
Cl-15	c	Calcination Operation for Aqueous Chloride Processes	Procedure 477-CLO, all revisions	Process description	Describes only one portion of chloride line
Cl-16	c	Dicesium Hexachloro Plutonate	Procedure 478-CLO, all revisions	Process description	Additional step of DCHP precipitation used for certain feed material only
Cl-17	c	Head End Processing of Aqueous Chloride Plutonium	Procedure 479-CLO, all revisions	Process description	Does not describe where silver nitrate and potassium chromate are disposed of
Cl-18	c	Hydroxide Precipitation of the Plutonium in Chloride Waste	Procedure 481-REC, all revisions	Process description	Describes only one portion of chloride line

AK Binder/ TWCP Number	Information Category Code*	Information	Source	Summary	Limitations
Cl-19 ✓	c	Recovery of Plutonium from Hydrochloric CLS-1 Solutions	Procedure 482-REC, all revisions	Process description	Doe not address RCRA-regulated solvents
Cl-20 ✓	c	Decladding of PuBe Neutron Sources	Procedure 482-CLO, all revisions	Process description	Decladding only
Cl-21 ✓	c	Purification and Recovery of Pu by Chloride Anion Exchange	Procedure 483-CLO, all revisions	Process description	Describes only one portion of chloride line
Cl-22 ✓	c	Radiochemical Analysis at TA-55	Procedure 029-CST-1, R02	Process description	Feed material only; does not address further processing
Cl-23 ✓	d	Answers to questions about chloride processes	Interview with Jim Foxx 8/31/99	Answers to questions on Chloride processes	none
Cl-24 ✓	d	Answers to questions about chloride processes	Interview with Jim Foxx, 9/15/99	Answers to questions on Chloride processes	none
Cl-25 ✓	d	Answers to questions about chloride processes	Interview with Jim Foxx, 9/23/99	Answers to questions on Chloride processes	none
Cl-26 ✓	d	Answers to questions about chloride processes	Interview with Tim Hayes, 1/12/00	Answers to questions on Chloride processes	nonw
Cl-27 ✓	d	Answers to questions about chloride processes	Interview with Tim Hayes, 6/1/00	Answers to questions on Chloride processes	none

*As defined in TWCP-QP-1.1-021, Section 6.2.4:

a. Forms intended for use in waste certification
b. Data from controlled databases and published documents
c. Unpublished data
d. Interviews, memos, and letters

MAP OF TA-55

PROCESS INPUTS AND OUTPUTS AND LIST OF FEED MATERIALS

Chloride Operations Feed Materials

- impure Pu metal
- pyrochemical salts
- crucible pieces (tantalum, magnesium oxide)
- impure metals, including cadmium, mercury, zinc, chromium
- anode heels
- oxides
- hydroxides
- Pu-Be sources and turnings
- stainless steel and/or tantalum residues from decladding of Pu-Be sources
- analytical laboratories (CLS-1, etc.) solutions

SIMPLIFIED SCHMATIC FLOWCHART OF CHLORIDE LINE

Attachment 3 - Acceptable Knowledge Source Document Summary

Waste Stream Number(s): LA-CIN01.001, LA-MHD01.001, LA-MIN02-V.001, LA-MIN04-S.001

Site(s): Los Alamos National Laboratory	**Source Document Tracking Number:** D023
Acceptable Knowledge Documentation Type: ✔ TRU Waste Management Program Information ✔ Waste Stream-Specific Information ✔ Supporting Information	**Category:** C - Correspondence ✔ D - Documents M - Miscellaneous P - Procedures DR - Discrepancy Resolution U - Unpublished Documents

Title of Source Document: TA-55 Plutonium Facility Acceptable Knowledge Report

Source Document Reference Information (author(s), document and revision number, date, publisher): TWCP-AK-2.1-008, R.2, 05/14/01, LANL

AK # [a]	Source Doc. Page # [b]	AK Information Summary
PR5, WS12	vii	Table: TA-55 Process/Status Code Index: Contains P/S Code, P/S Name, AK Process Report and Primary Report Section in which P/S Code is Described, and RCRA Listings for Combustible Debris
WS1, WS9	xvi-xxiv	Waste stream Number and Title: TA-55-19, Mixed Combustible Debris WasteTA-55-19A, Mixed Combustible Debris Waste with P120, a subset (I.e. lot) of waste stream TA-55-19TA-55-20, Non-mixed Combustible Debris Waste Waste Matrix Code: S5300 (same for all three)
S16	xvi-xxiv	(See limitation at end of this summary) Maximum Layers of Packaging: 6 (same for all three waste streams)
PR6, WS3	xvi-xxiv	Time Period of Generation: TA-55-19, Mixed Combustible Debris Waste: 1978-present, Waste Stream Volume (as stored): 4173 containers (873 m3) (including lot TA-55-19A) Waste Stream Volume (after repackaging): 850 SWBs, 3873 drums (2390 m3) TA-55-19A, Mixed Combustible Debris Waste with P120: 02/98-06/98, Waste Stream Volume (as stored): 12 containers (2.5 m3) Waste Stream Volume (after repackaging): Not yet determinedTA-55-20, Non-mixed Combustible Debris Waste: 1979-present. Waste Stream Volume (as stored): 281 containers (59 m3)Waste Stream Volume (after repackaging): Not yet determined
WS4	xvi	Waste Generasting Processes: (Same for all three waste streams): Plutonium manufacturing, recovery, and research operations at the TA-55 Plutonium Facility, as well as associated maintenance operations, generate TRU wastes. These operations include: Preparation of ultra-pure plutonium metals, alloys, and compounds. Preparation of specific alloys, including casting and machining these materials into specific shapes. Determination of the high-temperature thermodynamic properties of plutonium. Reclamation of plutonium from scrap and residues produced by numerous feed sources. Disassembly of components for inspection and analysisManufacturing of parts on a limited basis
PR2, WS7	xvi-xxiv	Defense Waste Status (same for all three waste streams): Defense-related transuranic (TRU) waste. There is no historical record or evidence of spent nuclear fuel or high-level waste ever having been handled at the facility.
WS12	xvi-xxiv	RCRA CharacterizationTA-55-19 is conservatively assigned the following EPA Hazardous Waste Numbers (HWNs). Many of the HWNs are time-dependent, and apply only to containers generated by a particular process over a specific period of time, as documented in process AK reports.F001, F002, F003, F005, D004, D005, D006, D007, D008, D009, D010, D011, D018, D019, D021, D022, D035, D038, D039, D040. TA-55-19A has the same codes and also P120

ORIGINAL

Attachment 3 - Acceptable Knowledge Source Document Summary (continued)

Site(s): Los Alamos National Laboratory		Source Document Tracking Number: D023
AK # [a]	**Source Doc. Page # [b]**	**AK Information Summary**
		(for vanadium pentoxide).
WS11	xvi-xxiv	Radionuclide Content: These waste streams predominantly contain a variety of plutonium material types with different well-defined isotopic compositions. Americium-241, neptuniump237, and uranium-234 may be present at detectable concentrations as decay products of their plutonium precursors. Some of the processes separate plutonium from americium and uranium. The waste will usually be enriched in americium-241 and uranium-234 relative to plutonium, but may also be depleted in some cases. Some waste may contain uranium and its decay products (e.g., uranium-234) from one of several uranium material types used as feed material. In addition, trace levels of cesium-137 and protactinium-231 may be present because of their widespread presence as contaminants in TA-55 operations. Other waste may contain various radionuclides used as feed materials for producing detector materials, including americium-241, americium-243, cerium-144, curium-244, protactinium-231, neptunium-237, thorium-232 enriched in thorium-230, uranium-233, and depleted uranium.
WS5	xxv	See Waste Generation Summary Diagram
WS12	vii-viii	Pg vii contains a table with the TA-55 process/status code index, including the RCRA listings for combustible debris.
WS8, WS12	All	Chemicals identified in report: hydrochloric acid, nitric acid, calcium fluoride, hydrofluoric acid, salts. Acids used in TA-55 are ascorbic acid, formic acid, hydrochloric acid, hydrofluoric acid, nitric acid, oxalic acid, perchloric acid, phorporic acid, stearic acid, sulfuric acide an dsuperacides. Bases used in TA-55 are calciumhydroxide, magnesium hydroxide, potassium hydroxide, and sodium hydroxide. Perschloric acid solutions were sent to cement fixation. Free liquids are absorbed on vermiculite. Table 5 on pg 35 contains a list of the use of RCRA-regulated inorganic chemicals in the TA-55 processes Table 6 on pg 37 contains a liste of the use of RCRA-regulated organic chemicals in TA-55 processes..
WS8, WS9	23	Table 1 contains a listing of feed materials for processes contributing to waste streams TA-55-19 and TA-55-20 including presence of RCRA-regualted substanced and P/S codes.
WS11	29	Table 4 contains a listing of secondary radionuclides in TA-55 TRU Waste.

Source Document Data Limitations (if any):

1. It is not evident that the three waste streams described in this document are similar, the same, or different from the two waste streams described in this source document database.
2. This document has numerous handwriten changes and the souce is unknown

Acceptable Knowlege Expert:

Amy Johns — Amy Johns — Date: 1/14/2009

Print /Sign

[a] Obtain from Acceptable Knowledge Documentation Checklist
[b] For microfilm or microfiche, identify box, tape, reel number and location.

Attachment 3 - Acceptable Knowledge Source Document Summary

Waste Stream Number(s): LA-CIN01.001, LA-MHD01.001, LA-MIN02-V.001

Site(s): Los Alamos National Laboratory	**Source Document Tracking Number:** D023
Acceptable Knowledge Documentation Type: ☑ TRU Waste Management Program Information ☑ Waste Stream-Specific Information ☑ Supporting Information	**Category:** ☐ C - Correspondence ☑ D - Documents ☐ M - Miscellaneous ☐ P - Procedures ☐ DR - Discrepancy Resolution ☐ U - Unpublished Documents

Title of Source Document: TA-55 Plutonium Facility Acceptable Knowledge Report

Source Document Reference Information (author(s), document and revision number, date, publisher): TWCP-AK-2.1-008, R.2, 05/14/01, LANL

AK # [a]	Source Doc. Page # [b]	AK Information Summary
PR5, WS12	vii	Table: TA-55 Process/Status Code Index: Contains P/S Code, P/S Name, AK Process Report and Primary Report Section in which P/S Code is Described, and RCRA Listings for Combustible Debris
WS1, WS9	xvi-xxiv	Waste stream Number and Title: TA-55-19, Mixed Combustible Debris WasteTA-55-19A, Mixed Combustible Debris Waste with P120, a subset (i.e. lot) of waste stream TA-55-19TA-55-20, Non-mixed Combustible Debris Waste Waste Matrix Code: S5300 (same for all three)
S16	xvi-xxiv	(See limitation at end of this summary) Maximum Layers of Packaging: 6 (same for all three waste streams)
PR6, WS3	xvi-xxiv	Time Period of Generation: TA-55-19, Mixed Combustible Debris Waste: 1978-present, Waste Stream Volume (as stored): 4173 containers (873 m3) (including lot TA-55-19A) Waste Stream Volume (after repackaging): 850 SWBs, 3873 drums (2398 m3) TA-55-19A, Mixed Combustible Debris Waste with P120: 02/98-06/98, Waste Stream Volume (as stored): 12 containers (2.5 m3) Waste Stream Volume (after repackaging): Not yet determinedTA-55-20, Non-mixed Combustible Debris Waste: 1979-present. Waste Stream Volume (as stored): 281 containers (59 m3)Waste Stream Volume (after repackaging): Not yet determined
WS4	xvi	Waste Generasting Processes: (Same for all three waste streams): Plutonium manufacturing, recovery, and research operations at the TA-55 Plutonium Facility, as well as associated maintenance operations, generate TRU wastes. These operations include: Preparation of ultra-pure plutonium metals, alloys, and compounds. Preparation of specific alloys, including casting and machining these materials into specific shapes. Determination of the high-temperature thermodynamic properties of plutonium. Reclamation of plutonium from scrap and residues produced by numerous feed sources. Disassembly of components for inspection and analysisManufacturing of parts on a limited basis
PR2, WS7	xvi-xxiv	Defense Waste Status (same for all three waste streams): Defense-related transuranic (TRU) waste. There is no historical record or evidence of spent nuclear fuel or high-level waste ever having been handled at the facility.
WS12	xvi-xxiv	RCRA CharacterizationTA-55-19 is conservatively assigned the following EPA Hazardous Waste Numbers (HWNs). Many of the HWNs are time-dependent, and apply only to containers generated by a particular process over a specific period of time, as documented in process AK reports.F001, F002, F003, F005, D004, D005, D006, D007, D008, D009, D010, D011, D018, D019, D021, D022, D035, D038, D039, D040. TA-55-19A has the same codes and also P120

SUPERSEDED ORIGINAL

Attachment 3 - Acceptable Knowledge Source Document Summary (continued)

Site(s): Los Alamos National Laboratory		Source Document Tracking Number: D023
AK # [a]	**Source Doc. Page # [b]**	**AK Information Summary**
		(for vanadium pentoxide).
WS11	xvi-xxiv	Radionuclide Content: These waste streams predominantly contain a variety of plutonium material types with different well-defined isotopic compositions. Americium-241, neptuniump237, and uranium-234 may be present at detectable concentrations as decay products of their plutonium precursors. Some of the processes separate plutonium from americium and uranium. The waste will usually be enriched in americium-241 and uranium-234 relative to plutonium, but may also be depleted in some cases. Some waste may contain uranium and its decay products (e.g., uranium-234) from one of several uranium material types used as feed material. In addition, trace levels of cesium-137 and protactinium-231 may be present because of their widespread presence as contaminants in TA-55 operations. Other waste may contain various radionuclides used as feed materials for producing detector materials, including americium-241, americium-243, cerium-144, curium-244, protactinium-231, neptunium-237, thorium-232 enriched in thorium-230, uranium-233, and depleted uranium.
WS5	xxv	See Waste Generation Summary Diagram
WS12	vii-viii	Pg vii contains a table with the TA-55 process/status code index, including the RCRA listings for combustible debris.
WS8, WS12	All	Chemicals identified in report: hydrochloric acid, nitric acid, calcium fluoride, hydrofluoric acid, salts. Acids used in TA-55 are ascorbic acid, formic acid, hydrochloric acid, hydrofluoric acid, nitric acid, oxalic acid, perchloric acid, phorporic acid, stearic acid, sulfuric acide an dsuperacides. Bases used in TA-55 are calciumhydroxide, magnesium hydroxide, potassium hydroxide, and sodium hydroxide. Perschloric acid solutions were sent to cement fixation. Free liquids are absorbed on vermiculite. Table 5 on pg 35 contains a list of the use of RCRA-regulated inorganic chemicals in the TA-55 processes Table 6 on pg 37 contains a liste of the use of RCRA-regulated organic chemicals in TA-55 processes..
WS8, WS9	23	Table 1 contains a listing of feed materials for processes contributing to waste streams TA-55-19 and TA-55-20 including presence of RCRA-regualted substanced and P/S codes.
WS11	29	Table 4 contains a listing of secondary radionuclides in TA-55 TRU Waste.

Source Document Data Limitations (if any):

1. It is not evident that the three waste streams described in this document are similar, the same, or different from the two waste streams described in this source document database.
2. This document has numerous handwriten changes and the souce is unknown

Acceptable Knowlege Expert:

Sheri Nance / Sheri Nance Date: 1/4/08
Print /Sign

[a] Obtain from Acceptable Knowledge Documentation Checklist
[b] For microfilm or microfiche, identify box, tape, reel number and location.

LA-UR-01-2486

INTERIM CHANGE REQUEST

☑ TWCP ☐ WRR ☐ Other If Other, please identify: _____	**IC Number:** 2
Person Requesting this Interim Change: June Fabryka-Martin	
DOCUMENT INFORMATION	
Document Title: Acceptable Knowledge Summary Report for Waste Streams TA-55-19 and TA-55-20	**Document No./Revision:** TWCP-AK-2.1-008,R.2
Effective Date of Current Document: 07/26/01	**Document Preparer:** John Musgrave

CHANGE INFORMATION: Please ensure the following changes are made:

Section/Page	Change:	Reason/Justification:
Section 2.0	Insert Note following the first bullet in Section 2.0: NOTE: The primary sources of waste generator information presented in the AK Information Summary are: • the "Los Alamos National Laboratory Transuranic Waste Database" maintained by the Facility Waste Operations (FWO) – Integrated Information Management (IIM) group for all TRU waste in storage at TA-54, in accordance with AP-SWO-006; • the TA-55 Waste Management System (WMS) database described in QA-TP-WMS-000.001 and in Section 7.2 of the *TA-55 Transuranic Waste Interface Document* (TWID); and • archived older versions of the TA-55 WMS database (TWCP-6988).	Respond to CBFO audit comments, by improving traceability to AK data sources.
Attachment 1	Insert new references to AK Roadmap (see attached page)	

Date changes submitted: 10/25/01	**Desired effective date for changes:** 10/26/01

INTERIM CHANGE APPROVAL

Document Preparer: John Musgrave		Reviewer (if applicable):	
Signature: John Musgrave	Date: 10/25/01	Signature:	Date:
Site Project QA Officer: Lawrence A. Souza		LAAO (if implementing WAP requirements):	
Signature: L A Souza	Date: 10/25/01	Signature:	Date:
☑ IC Approved ☐ Major Rev. ☐ Hold for next Rev.		Do changes affect WAP data collection, data quality, or performance criteria? ☐ Yes ☑ No If yes, date of CBFO approval: _____ (documentation attached)	
Site Project Mgr/Line Mgr: P Rogers			
Signature: Pamela Rogers	Date: 10/25/01		
USQ Screener (if applicable): NA			
Signature: Greg Berghurst	Date: 10-29-01		

NOTE: Changes can be designated on the document and attached to this form.

Effective date for this interim change: 11/02/01

TWCP Record No.	Information Category Code	Information	Source	Summary	Limitations
AP-SWO-006, R.3.1	A	Describes how the TRU Waste Storage Record (TWSR) is prepared, reviewed, submitted, and entered into a TRU waste database	*Review and completion of the TWSR*	Section 8.6 describes how waste generator information submitted on the TWSR, as well as other receipt and storage information, is entered into the LANL TRU Waste Database for TRU waste stored at TA-54.	Does not contain any data. No detailed discussion of changes made in this procedure since it was first issued in June 1994 as DOP-CST17G-003,R.0. The current procedure listed here was issued April 2001.
NMT7-AP-TA55-018, R3	A	Contains waste generator information required by the LANL TRU Waste Certification Plan	*TA-55 Transuranic Waste Interface Document* (TWID)	Contains information on waste characterization, waste packaging configurations, and TRUCON codes for newly-generated TA-55 waste. Describes how waste generator information in the TA-55 Waste Management System (WMS) database is certified and maintained for waste generated at the TA-55 facility. Contains information on current and projected waste stream volumes.	Does not contain data on specific waste containers. Does not contain information for legacy waste generated prior to this document's approval. Periodically updated by TA-55.
QP-TP-WMS-000.001	B	Compilation of TA-55 waste generator information, for individual waste containers.	TA-55 Waste Management System (WMS)	Certified and current database of waste container identifiers, waste codes (e.g., IDC, RSWD, EPA HWNs), assay results, packaging dates, waste material content and generating processes for TA-55 wastes.	Controlled access, continually being updated
TWCP-6988	B	Compilation of TA-55 waste generator information, for individual waste containers.	*Archived generator's databases 95DRUM and 95ncdrum.*	Database of waste container identifiers, waste codes (e.g., IDC, RSWD, EPA HWNs), assay results, packaging dates, waste material content and generating processes for TA-55 wastes.	Archive of previous version of the TA-55 WMS; may not contain latest corrections.

INTERIM CHANGE REQUEST

☑ TWCP ☐ WRR ☐ Other **If Other, please identify:** _____	**IC Number:** 1
Person Requesting this Interim Change: June Fabryka-Martin	
DOCUMENT INFORMATION	
Document Title: Acceptable Knowledge Summary Report for Waste Streams TA-55-19 and TA-55-20	**Document No./Revision:** TWCP-AK-2.1-008,R.2
Effective Date of Current Document: 05/14/01	**Document Preparer:** John Musgrave

CHANGE INFORMATION: Please ensure the following changes are made:

Section/Page	Change:	Reason/Justification:
iii	Revise section 8.1 title: "F, K, and P Listings"	No applicable U listings
iv	List "Attachment 6, Drum List for Waste Stream Lot TA-55-19A (1 page)"	New attachment
vi	Delete U from list of acronyms	Not used in report
xvii, xxi	Delete bullet about U213 (tetrahydrofuran)	No evidence for presence of tetrahydrofuran in TA-55 TRU waste
3.2.2 / p. 7	Delete "usually"	Editorial correction
3.4 / p. 8	Add "(Attachment 6)" to end of NOTE	New attachment lists drums of combustible debris waste to which HWN P120 is applicable
3.6.3.1 / p. 30	Add to beginning of first bullet, "D001 (oxidizer), "	Editorial correction
3.6.3.1 / p. 31	Add to beginning of top bullet, "D001,"	Editorial correction
Table 6 / p. 38	Replace comment about Tetrahydrofuran: "U213 is not applicable to the use of this chemical because there is no evidence of a spill or of spill residues entering TA-55 TRU waste streams."	No evidence for presence of tetrahydrofuran in TA-55 TRU waste
8.1 / p. 41	Revise section 8.1 title: "F, K, and P Listings"	No applicable U listings
8.1 / p. 42	Delete paragraph about U213	No evidence for presence of tetrahydrofuran in TA-55 TRU waste
12.0 / p. 49	Revise text about PCBs	Document disposal path for waste items which may contain PCBs, and required check for such items during RTR

14.1 / p. 52	Add new bullet: On average, the drums contain 92 wt. % combustible debris waste, 5 wt. % metal debris waste, and 3 wt. % packaging material.	To confirm the classification of these waste streams as combustible debris
14.4 / p. 59	Delete last bullet about tetrahydrofuran	Information is not relevant
15.0	List TWCP-DTP-1.2-008 as new reference	Reference discusses required check for PCB-containing items during RTR
New Attachment 6	Add "Attachment 6, Drum List for Waste Stream Lot TA-55-19A"	New attachment lists drums of combustible debris waste to which HWN P120 is applicable
Attachment 1	Add TWCP-3568 (N-74 and N-82) and TWCP-5372 to AK Roadmap	References are cited in Section 12 and Attachment 6

Date changes submitted: 05/15/01 **Desired effective date for changes**: 05/18/01

INTERIM CHANGE APPROVAL

Document Preparer: John Musgrave		Reviewer (if applicable): June Fabryka-Martin	
Signature: John Musgrave	Date: 5/15/01	Signature: June Fabryka-Martin	Date: 5/15/01
Site Project QA Officer: MA Gavett		LAAO (if implementing WAP requirements):	
Signature: MA Gavett	Date: 5/15/01	Signature:	Date:
☑ IC Approved ☐ Major Rev. ☐ Hold for next Rev.		Do changes affect WAP data collection, data quality, or performance criteria?	
Site Project Mgr/Line Mgr: Pam Rogers			
Signature: Pamela Rogers	Date: 5/15/01	~~☑ Yes~~ ☑ No	
USQ Screener (if applicable): Not applicable		If yes, date of CBFO approval: _____ (documentation attached)	
Signature:	Date:		

NOTE: Changes can be designated on the document and attached to this form.

Effective date for this interim change: 07/26/01

ATTACHMENT 6. DRUM LIST FOR WASTE STREAM LOT TA-55-19A

A review of TA-55 data bases of waste items packaged into drums (TWCP-5086) and the Sampling Plan (TWCP-PLAN-0.2.7-001,R.3) identified the following twelve 55-gallon drums that contained combustible debris generated by P/S codes SD and SS and that were closed between February 1, 1998 and December 31, 1998 (TWCP-5372).

Drum Identifier	P/S Codes of Waste Items (TWCP-5086)	Packaging Date (Sampling Plan,R.3)
LA00000056873	ED, RFX, SS, TDC	04/13/98
LA00000056876	CXL, ED, EV, ME, SS	05/12/98
LA00000056887	SS	06/09/98
LA00000056902	BC, MA, SS, TDC	09/29/98
LA00000056924	SS	07/13/98
LA00000056930	SS	08/17/98
LA00000057121	BM, FF, SS	08/31/98
LA00000057137	CXL, SS, TDC	09/29/98
LA00000057164	SS	10/28/98
LA00000057737	FF, SS	12/01/98
LA00000057755	ATL, BM, CXL, MA, SS, TIGR, XO	11/24/98
LA00000057766	SS	11/24/98

Replacement text for Section 12.0:

No PCBs were introduced into the nitrate operations, based on documentation in TA-55 procedures reviewed during the AK investigation and summarized in lists of process inputs documented in the TA-55 process AK reports.

- In the cement fixation process (P/S codes CF and HP), oils are sometimes added to drums of cemented waste. There is no indication these oils contain PCBs, and they are added to the 55-gallon drums of cement in small quantities (maximum of 6 liters [TWCP-3568/N-74]). The oils are primarily vacuum pump oils, along with some oils used in heat-treating (cooking or silicone oils) or in grinding (TWCP-3568/N-82). None of these oils are known to contain PCBs.

- All transformers known to contain PCBs have been tracked from initiation of operations of TA-55 in 1978. When any transformer oil is drained, the oil is handled by a subcontractor who is wholly responsible for its disposal; this oil does not enter the LANL disposal operations (TWCP-3568/N-82).

- Ballast in fluorescent light fixtures could contain PCBs, but at TA-55 these light fixtures are outside the gloveboxes and hence would not enter the TRU waste stream.

- Oil-filled capacitors are not known to have been used in TA-55 gloveboxes.

In addition, if the possibility exists for the waste to contain PCBs, RTR operators are required to check for indications of PCB-containing materials or PCB-contaminated materials. If there is reason to suspect that an item may contain PCBs (based on AK, operator training, or previous operator experience), then the operator submits a PWR and places a hold tag on the waste container (Section 6.6.6 and Table 3 in TWCP-DTP-1.2-008).

Add to Section 15.0:

Performing Nondestructive Testing Using the Mobile Real-Time Radiography System (TWCP-DTP-1.2-008)

New references to add to Attachment 1:

TWCP Record No.	Information Category Code*	Information	Source	Summary	Limitations
TWCP -3568 /N-74	C	Chemical list; process description (P/S code CF)	Organic Liquid Emulsification, TRU-NMT2-DP-13, R00; TRUWM-TA55-DP-13-R00; 8/30/93 through 9/30/94	Emulsifying waste oil and other organic liquids for cement fixation.	None
TWCP -3568 /N-82	C	Clarification of specific processes within the nitrate operations at TA-55	Jim Foxx, SME, response to comments received on the draft Acceptable Knowledge Summary Report for TA-55 Nitrate Operations, 2/25/00	Resolutions to the questions and issues raised by Pam Rogers during her review of the Acceptable Knowledge Summary Report for TA-55 Nitrate Operations, 2/25/00	Information is based on SME knowledge.
TWCP -5372	D	Applicability of P120 to waste generated by P/S codes SD and SS	Interview with Jim Foxx (TA-55 SME) on May 7, 2001	Vanadium pentoxide was used between February 1998 and June 1998. SME information indicates that waste from this work would have been packaged into containers that were closed by the end of December 1998.	None

TA-55 PLUTONIUM FACILITY
ACCEPTABLE KNOWLEDGE REPORT

REPORT TITLE: Acceptable Knowledge Summary Report for Waste Streams TA-55-19 and TA-55-20

REPORT NUMBER: TWCP-AK-2.1-008,R.2 (LA-UR-01-2486)

WASTE GENERATED FROM WASTE STREAMS: TA-55-19, Lot TA-55-19A, and TA-55-20

EFFECTIVE DATE: 05/14/01

NEXT REVIEW DATE: 05/14/03

DOCUMENT PREPARER:

John Musgrave — 5/7/01
JOHN MUSGRAVE — DATE

APPROVALS:

Jane Fabryka-Martin — 5/7/01
INDEPENDENT TECHNICAL REVIEWER/EDITOR — DATE

Mavis R Lo — 5/10/01
SITE PROJECT MANAGER — DATE

Sandy Wander — 5/11/01
WASTE CERTIFICATION OFFICIAL — DATE

[illegible] — 5/14/01
SITE PROJECT QA OFFICER — DATE

Charles L. Fox — 5/7/01
FACILITY REPRESENTATIVE — DATE

© 2000, 2001 University of California

HISTORY OF REVISIONS

Revision No.	Date	Pages Revised	Reason for Change
0	08/31/00	—	New report (TWCP-03844)
1	12/04/00	All	Make report a controlled document and respond to CAR-00-036
1/IC1	12/15/00	Acceptable Knowledge Summary	To clarify segregation of containers in TA-55-19A
2	05/14/01	All	To respond to CBFO reviewer comments, update with new AK information, and add new section on AK confirmation
2/IC1	07/26/01	All	Respond to auditor comments
2/IC2	11/02/01	Section 2, Attachment 1	Respond to CBFO audit comments, by improving traceability to AK data souces.

CONTENTS

Section **Page**

ACRONYMS v
TA-55 PROCESS/STATUS CODE INDEX vii
ACCEPTABLE KNOWLEDGE SUMMARY FOR TA-55-19 xvi
ACCEPTABLE KNOWLEDGE SUMMARY FOR TA-55-19A xix
ACCEPTABLE KNOWLEDGE SUMMARY FOR TA-55-20 xxii
WASTE GENERATION SUMMARY DIAGRAM xxv
1.0 INTRODUCTION 1
2.0 METHODOLOGY USED TO SEARCH FOR AK RECORDS 1
3.0 DESCRIPTION OF THE WASTE STREAM 3
3.1 Facility and Mission 3
3.2 Basis, Rationale, and Assumptions Used to Delineate the Waste Streams 3
3.3 Waste Physical Form and Content Description 7
3.4 Waste Volume and Time Period of Waste Generation 8
3.5 Waste Stream Generation Processes 8
3.6 Material Inputs to the Waste Generation Processes 22
4.0 DIVISION OF THE WASTE STREAM INTO LOTS 39
5.0 CORRELATIONS BETWEEN WASTE STREAMS 39
6.0 ASSIGNMENT OF WASTE MATRIX CODES 40
7.0 ASSIGNMENT OF WASTE MATERIAL PARAMETER CODES 40
8.0 ASSIGNMENT OF EPA HAZARDOUS WASTE NUMBERS 41
8.1 F, K, and P Listings 41
8.2 Toxicity Listings 42
9.0 VERIFICATION THAT IGNITABLE, REACTIVE, AND CORROSIVE WASTES WERE EXCLUDED 46
10.0 VERIFICATION THAT INCOMPATIBLE CHEMICALS WERE PROHIBITED 47
11.0 VERIFICATION THAT THERE ARE NO COMPRESSED GASES, FREE LIQUIDS, NONRADIONUCLIDE PYROPHORICS, SEALED CONTAINERS GREATER THAN FOUR LITERS IN VOLUME, OR >1% RADIONUCLIDE PYROPHORICS 48
12.0 VERIFICATION THAT THERE ARE NO POLYCHLORINATED BIPHENYLS (PCBs) IN THE WASTE STREAM 49
13.0 DETERMINATION OF THE MAXIMUM NUMBER OF CONFINEMENT LAYERS PERMITTED FOR WASTE PACKAGING 49

Section **Page**

14.0 CONFIRMATION OF AK INFORMATION FOR THE WASTE STREAM 52
14.1 Radiography Data 52
14.2 Visual Examination Data 55
14.3 Radioassay Data 58
14.4 Headspace Gas Data 59
15.0 CITED PROCEDURES AND REQUIREMENTS DOCUMENTS 61

Tables **Page**

1 Feed Materials for Processes Contributing to Waste Streams TA-55-19 and TA-55-20 23
2 Average Isotopic Content of Plutonium Material Types and Enrichments 27
3 Average Isotopic Content of Uranium Material Types and Enrichments (Wt. %) 27
4 Secondary Radionuclides in TA-55 TRU Waste 29
5 Use of RCRA-Regulated Inorganic Chemicals in TA-55 Processes 35
6 Use of RCRA-Regulated Organic Chemicals in TA-55 Processes 37
7 Maximum Layers of Confinement to Be Used for TA-55-19 and TA-55-20 Waste Containers in the Absence of More Specific Waste Characterization Data 51
8 RTR Data for Waste Streams TA-55-19 and TA-55-20 53
9 RTR Packaging Data for Waste Streams TA-55-19 and TA-55-20 54
10 VE Data for Waste Streams TA-55-19 and TA-55-20 56
11 Radioassay Data for Waste Streams TA-55-19 and TA-55-20 57
12 Headspace Gas Data for Target Analytes in Waste Stream TA-55-19 60
13 Headspace Gas Data for Flammable VOCs, Hydrogen, and Methane in Waste Stream TA-55-19 62

Attachments

1 Acceptable Knowledge Roadmap (16 pages)
2 LANL and TA-55 Site Maps (2 pages)
3 Simplified Process Flow Diagrams (8 pages)
4 Waste Generator Forms for TRU Waste (6 pages)
5 Chemical Waste Disposal Request Form (1 page)
6 Drum List for Waste Stream Lot TA-55-19A (1 page)

ACRONYMS

AK	acceptable knowledge
ARIES	Advanced Recovery and Integrated Extraction System
CBFO	Carlsbad Field Office
CFR	*Code of Federal Regulations*
CMPO	octylphenyldiisobutylcarbamoylmethylphosphine oxide
C–N–O	carbon–nitrogen–oxygen
CSMO	Central Scrap Management Office
DBBP	dibutyl butylphosphonate
DCHP	dicesium hexachloroplutonate
DHDCMP	dihexyl N,N-diethylcarbamoylmethyl phosphonate
DL	discard limit
DOE	U.S. Department of Energy
DOR	direct oxide reduction
DTP	detailed technical procedure
DWLS	Discardable Waste Log Sheet
EPA	U.S. Environmental Protection Agency
F	Chemical symbol for Fluoride, or RCRA hazardous waste number prefix for hazardous wastes from non-specific sources, defined in 40 CFR Subpart D, Section 261.31
FOOF	dioxygen difluoride
HEPA	high-efficiency particulate air
HWN	hazardous waste number
ICP	Inductively coupled plasma
ID	item identification
IDC	item description code
K	RCRA hazardous waste number prefix for hazardous wastes from specific sources, defined in 40 CFR Subpart D, Section 261.32
LANL	Los Alamos National Laboratory
LLW	low-level waste
M	molar
MCDOR	multicycle direct oxide reduction
MDL	Method detection limit
MEGAS	Multiple Energy Gamma Assay System
MSE	molten-salt extraction
MT	material type
NDA	nondestructive assay
NIOSH	National Institute for Occupational Safety and Health
NMT	Nuclear Material Technology
P	Chemical symbol for Phosphorus, or RCRA hazardous waste number prefix for acute hazardous waste defined in 40 CFR Subpart D, Section 261.33
PCB	polychlorinated biphenyl
PF	Plutonium Facility
ppm	part per million

ppmv	part per million, on a volume basis
PRQL	program required quantitation limit
P/S	process/status [code]
PuBe	plutonium–beryllium
PVDF	polyvinyldienefluoride (also known as Kynar)
PWR	prohibited wasted report
QA	quality assurance
QP	quality procedure
R&D	research and development
RCRA	Resource Conservation and Recovery Act
RD&D	research, development, and demonstration
RFETS	Rocky Flats Environmental Technology Site
RLWTF	Radioactive Liquid Waste Treatment Facility
RMDC	Records Management/Document Control
RSWD	radioactive solid waste disposal
RTR	real-time radiography
Sampling Plan	*Los Alamos National Laboratory Transuranic Waste Characterization Sampling Plan* (TWCP-PLAN-0.2.7-001)
SME	subject matter expert
SOP	safe operating procedure
TA	technical area
TBP	tributyl phosphate
TOPO	trioctylphosphine oxide
TRU	transuranic
TRUCON	TRUPACT-II Content Code
TRUPACT-II	Transuranic Waste Transporter-Model II
TWBIR	Transuranic Waste Baseline Inventory Report
TWCP	Transuranic Waste Characterization/Certification Project
UCL_{90}	90% Upper Concentration Limit
UCNI	unclassified controlled nuclear information
VE	visual examination
VOC	volatile organic compound
WAC	Waste Acceptance Criteria
WIPP	Waste Isolation Pilot Plant
WIPP WAP	Attachment B, Waste Analysis Plan, to the *Hazardous Waste Facility Permit Issued to the Waste Isolation Pilot Plant* (EPA No. NM4890139088)
WODF	Waste Origination and Disposition Form
WPRF	Waste Profile Request form
XES	X-ray energy spectroscopy

TA-55 PROCESS/STATUS CODE INDEX

P/S Code	P/S Name	AK Process Report and Primary Report Section in which P/S Code is Described*		RCRA Listings for Combustible Debris
AC	Actinide chemistry, R&D	Miscellaneous Operations	3.5.3, Att. 4	D007, D009, D011, D018, D022, D038, F002, F005
AC1	Actinide chemistry, R&D	Miscellaneous Operations	3.5.3, Att. 4	D007, D009, D011, D018, D022, F002, F005
AC2	Actinide chemistry, R&D	Miscellaneous Operations	3.5.3, Att. 4	D007, D009, D011, D018, D022, D038, F002, F005
AC3	Actinide chemistry, R&D	Miscellaneous Operations	3.5.3, Att. 4	
ACC	Ammonium chloride conversion	Special Processing	3.5.8, Att. 4	
ACD	Cascade dissolver	Special Processing	3.5.1, Att. 4	D005, D006, D007, D008, D011
ACL	Analytical chemistry laboratory	Miscellaneous Operations	3.5.4, Att. 4	D007, D009
AD	Actinide processing demonstration	Miscellaneous Operations	3.5.1, Att. 4	D004, D005, D006, D007, D008, D009, D010, D011, D019, D039, F002, F003
AL	Ash leach	Nitrate Operations	3.5.2, Att. 4	D005, D006, D007, D008, D011
AO	Assembly operation	Metal Operation Processes	3.5.3, Att. 4	
AO	Americium processing calcination	Nitrate Operations	3.5.3, 3.5.6, Att. 4	
AP	Americium purification	Nitrate Operations	3.5.3, 3.5.6, Att. 4	D007, D009
APD	Actinide processing demonstration	Miscellaneous Operations	3.5.7, Att. 4	D007, D008, D009, D019, D021, D022, D039, F002, F003
ARI	ARIES	Metal Operation Processes	3.5.3, Att. 4	
AS	Anode heel dissolution	Nitrate Operations	3.5.2, 3.5.6, Att. 4	D006, D007, D008, D011
AT	Ash testing	Nitrate Operations	3.5.2, Att. 4	D005, D006, D007, D008, D011
ATL	Advanced test line for actinide separation RD&D	Nitrate Operations	3.5.2, Att. 4	D005, D006, D007, D008, D011
AX	Solution assay	Miscellaneous Operations	3.5.3, Att. 4	D007, D009
BA	Basement isopress	Metal Operation Processes	3.5.2, Att. 4	
BAC	Bacterial decomposition of cellulose items	Nitrate Operations	3.5.2, 3.5.6, Att. 4	
BC	Physical properties	Metal Operation Processes	3.5.2, Att. 4	
BF	Unknown name for P/S code	Nitrate Operations	3.5.6, Att. 4	D006, D007, D008, D011

P/S Code	P/S Name	AK Process Report and Primary Report Section in which P/S Code is Described*		RCRA Listings for Combustible Debris
BL	Blending	Nitrate Operations	3.5.1, 3.5.6, Att. 4	
BM	Burning metal	Nitrate Operations	3.5.1, Att. 4	
BT	Burst testing	Metal Operation Processes	3.5.3, Att. 4	
BU	Button burning	Nitrate Operations	3.5.1, 3.5.6, Att. 4	D006, D007, D008, D011
CA	Casting	Metal Operation Processes	3.5.2, Att. 4	
CC	Calcination	Nitrate Operations	3.5.3, 3.5.6, Att. 4	
CD	Hydroxide cake dissolution	Nitrate Operations	3.5.2, Att. 4	D006, D007, D008, D009, D011
CF	Cement fixation	Nitrate Operations	3.5.5, Att. 4	D007, D008, D009, D011, D019, D021, D022, D039, F002, F003
CH	Characterization	Nitrate Operations	3.5.3, 3.5.6, Att. 4	
CK	RD&D volatile fluoride Pu recovery	Miscellaneous Operations	3.5.2, Att. 4	D005, D006, D007, D008, D009, D011
CL	Crucible processing	Chloride Operations	3.5.2, 3.5.3, Att. 4	D007, D008, D009
CLRD	Aqueous chloride R&D	Chloride Operations	3.5.2, Att. 4	D007, D008, D009
CLS	Accountable CLS chloride solutions	Chloride Operations	3.5.2, 3.5.3, 3.5.4, Att. 4	D007, D008, D009, D019, D021, D022, D039, F002, F003
CN	C-N-O analysis	Metal Operation Processes	3.5.1, Att. 4	
CO	Comminution	Metal Operation Processes	3.5.1, Att. 4	
COD	Chlorinated oxide dissolution	Nitrate Operations	3.5.2, 3.5.6, Att. 4	
COL	Chlorinated oxide leach	Nitrate Operations	3.5.2, 3.5.6, Att. 4	D005
CPOD	Catalyzed electrochemical plutonium oxide dissolver	Nitrate Operations	3.5.2, Att. 4	D011
CR	Crushing and pulverizing	Nitrate Operations	3.5.1, Att. 4	
CRD	Chlorination/reduction RD&D	Pyrochemical Processes	3.5, Att. 4	
CS	Chloride solutions	Chloride Operations	3.5.3, Att. 4	D007, D008, D009
CSE	Chloride solvent extraction	Chloride Operations	3.5.3, Att. 4	D007, D008, D009, D039, F002
CT	Compatibility testing	Metal Operation Processes	3.5.1, Att. 4	
CV	RD&D experimental chlorination processes	Miscellaneous Operations	3.5.2, Att. 4	D005, D006, D007, D008, D009, D011, D019
CW	Caustic waste	Chloride Operations	3.5.4, Att. 4	D007, D008, D009, D011, D019, D021, D022, D039, F002, F003

P/S Code	P/S Name	AK Process Report and Primary Report Section in which P/S Code is Described*		RCRA Listings for Combustible Debris
CX	Chloride anion exchange	Chloride Operations	3.5.2, 3.5.3, 3.5.4, Att. 4	D007, D008, D009, D011
CXL	Experimental chloride extraction line	Chloride Operations	3.5.2, 3.5.3, Att. 4	D007, D008, D009
DA	Alloy development Pu items	Metal Operation Processes	3.5.2, Att. 4	F002
DF	DS furnace and oxide preparation	Nitrate Operations	3.5.3, 3.5.6, Att. 4	
DO	Dissolution of oxide	Special Processing	3.5.3, 3.5.5, 3.5.7, Att. 4	D007, D011
DOP	Detector oxide preparation	Metal Operation Processes	3.5.2, Att. 4	D008
DP	Dry processing	Nitrate Operations	3.5.1, 3.5.6, Att. 4	
DS	Ion exchange	Nitrate Operations	3.5.3, Att. 4	D006, D007, D008, D009, D011
DT	John Ward R&D	Metal Operation Processes	3.5.2, Att. 4	
ED	Cascade dissolver	Nitrate Operations	3.5.2, Att. 4	D005, D006, D007, D008, D011
EDC	Electrolytic decontamination	Miscellaneous Operations	3.5.8, Att. 4	D007
EL	Element loading	Metal Operation Processes	3.5.1, Att. 4	D040
ELW	Experimental laser welding	Metal Operation Processes	3.5.3, Att. 4	
EM	Electron microscopy	Metal Operation Processes	3.5.2, Att. 4	
EOC	Experimental oxide characterization	Miscellaneous Operations	3.5.5, Att. 4	D007, D009
ER	Electrorefining	Pyrochemical Processes	3.5.4, Att. 4	D006, D008
ETD	Experimental thermal decomposition	Nitrate Operations	3.5.1, 3.5.6, Att. 4	D005, D006, D007, D008, D011
EV	Evaporator	Nitrate Operations	3.5.4, Att. 4	D006, D007, D008, D009, D011
EVAC	Evacuation and bake out	Metal Operation Processes	3.5.3, Att. 4	
EXT	Extraction RD&D	Miscellaneous Operations	3.5.6, Att. 4	D005, D006, D007, D008, D009, D011
FA	Americium processing	Nitrate Operations	3.5.3, 3.5.6, Att. 4	
FC	Canning	Nitrate Operations	3.5.3, 3.5.6, Att. 4	
FDL	FOOF demonstration loop	Miscellaneous Operations	3.5.2, Att. 4	D004, D005, D006, D007, D008, D009, D010, D011
FF	Fuel fabrication	Metal Operation Processes	3.5.1, Att. 4	D022, D040
FLU	Fluorination RD&D	Miscellaneous Operations	3.5.2, Att. 4	D004, D005, D006, D007, D008, D009, D010, D011
FSPF	Special furnace operations	Metal Operation Processes	3.5.3, Att. 4	

P/S Code	P/S Name	AK Process Report and Primary Report Section in which P/S Code is Described*		RCRA Listings for Combustible Debris
FX	Cement to drum	Nitrate Operations	3.5.6, Att. 4	D006, D007, D008, D009, D011
GI	Pellet grinding & inspection	Metal Operation Processes	3.5.1, Att. 4	
GMS	Open gradient magnetic separation	Nitrate Operations	3.5.1, Att. 4	
HC	Calcination	Nitrate Operations	3.5.3, 3.5.6, Att. 4	
HCD	Hydroxide cake dissolution	Nitrate Operations	3.5.2, Att. 4	D006, D007, D008, D009, D011
HD	Hydroxide cake dissolution	Nitrate Operations	3.5.2, Att. 4	D006, D007, D008, D009, D011
HG	Pu removal by mercury	Metal Operation Processes	3.5.2, Att. 4	
HGMS	High gradient magnetic separation	Nitrate Operations	3.5.1, 3.5.6, Att. 4	D006, D007, D008, D009, D011
HP	Cement fixation	Nitrate Operations	3.5.5, Att. 4	D007, D008, D009, D011, D019, D021, D022, D039, F002, F003
HRA	Hanford Reservation Material	Nitrate Operations	3.5.6, Att. 4	D004, D005, D006, D007, D008, D009, D010, D011
HRS	High resolution spectroscopy	Miscellaneous Operations	3.5.5, Att. 4	
IA	Impure americium holding for discard	Nitrate Operations	3.5.5, 3.5.6, Att. 4	D006, D007, D008, D009, D011
IAM	Inspection and measurement	Special Processing	3.5.1, Att. 4	D005, D006, D007, D008, D011
IB	Matrix study of pyrochemical salts	Miscellaneous Operations	3.5.6, Att. 4	D005, D006, D007, D008, D009, D011
ICP	ICP-AES analysis	Miscellaneous Operations	3.5.4, Att. 4	D007, D009
ID	Immersion density	Metal Operation Processes	3.5.1, Att. 4	
IE	Isotope enrichment	Miscellaneous Operations	3.5.2, Att. 4	D005, D006, D007, D008, D009, D011
IN	Inspection	Metal Operation Processes	3.5.2, Att. 4	
IS	Incinerator	Nitrate Operations	3.5.1, Att. 4	D005, D006, D007, D008, D011
ITF	Impact test facility	Metal Operation Processes	3.5.2, Att. 4	
ITF4	Impact test facility	Metal Operation Processes	3.5.2, Att. 4	
ITF7	Impact test facility	Metal Operation Processes	3.5.2, Att. 4	
IX	Ion exchange	Special Processing	3.5.2, Att. 4	D006, D007, D008, D009, D011
JA	Gas isostatic press	Metal Operation Processes	3.5.2, Att. 4	
KBTF	Kolsky bar test facility	Metal Operation Processes	3.5.3, Att. 4	D008
LC	Uranium plutonium processing	Nitrate Operations	3.5.2, 3.5.6, Att. 4	

P/S Code	P/S Name	AK Process Report and Primary Report Section in which P/S Code is Described*		RCRA Listings for Combustible Debris
LD	Chloride leach & dissolution	Chloride Operations	3.5.2, Att. 4	D007, D008, D009
LG1	Non combustible leach	Nitrate Operations	3.5.2, 3.5.6, Att. 4	D006, D008
LG2	Hydroxide cake dissolution	Nitrate Operations	3.5.2, 3.5.6, Att. 4	D006, D007, D008, D009, D011
LI	XF6 experimental measurements	Miscellaneous Operations	3.5.2, Att. 4	D005, D006, D007, D008, D009, D011
LIBS	Laser-induced breakdown spectroscopy system	Miscellaneous Operations	3.5.5, Att. 4	
LR	Ion exchange	Nitrate Operations	3.5.3, Att. 4	D006, D007, D008, D009, D011
MA	Machining	Metal Operation Processes	3.5.2, Att. 4	D035, D040, F001, F005
MAG	Magnetic separation	Nitrate Operations	3.5.1, Att. 4	
MAS	RD&D experimental processes	Nitrate Operations	3.5.1, Att. 4	
MB	Nitric dissolution of molten salts	Chloride Operations Nitrate Operations	3.5.2, Att. 4 3.5.2, 3.5.6, Att. 4	D007, D008, D009
MBC	Crystal	Metal Operation Processes	3.5.3, Att. 4	
ME	Metallography	Miscellaneous Operations	3.5.10, Att. 4	D007, D040, F003
MELL	Mediated electro-oxidation of LLW	Nitrate Operations	3.5.2, Att. 4	D006, D007, D008, D009, D011
MF	Metals furnace	Nitrate Operations	3.5.1, 3.5.6, Att. 4	
ML	Non-Pu metal leach	Nitrate Operations	3.5.2, Att. 4	D006, D008
MO	Metal oxidation, room 429	Pyrochemical Processes	3.5.9, Att. 4	
MOX	Mixed oxide fuel production	Metal Operation Processes	3.5.1, Att. 4	
MP	Metal preparation	Pyrochemical Processes	3.5.1, Att. 4	
MPD	Cascade dissolver	Nitrate Operations	3.5.2, Att. 4	D005, D006, D007, D008, D011
MS	Molten salts purification dissolution	Chloride Operations	3.5.2, Att. 4	D007, D008, D009
MW	Metal working	Metal Operation Processes	3.5.2, Att. 4	
NC	Noncombustible leach	Nitrate Operations	3.5.2, Att. 4	D006, D008
NCD	Nonconfirming drums	Miscellaneous Operations	3.5.9, Att. 4	
NEPTUNIUM	Neptunium	Pyrochemical Processes	3.5.10, Att. 4	
NL	Noncombustible leach	Nitrate Operations	3.5.2, 3.5.6, Att. 4	D006, D008
NR	Nitrate recovery	Nitrate Operations	3.5.2, 3.5.6, Att. 4	
OB	Oxide blending	Metal Operation Processes	3.5.1, Att. 4	
OD	Oxide dissolution	Nitrate Operations	3.5.2, Att. 4	D006, D007, D008

P/S Code	P/S Name	AK Process Report and Primary Report Section in which P/S Code is Described*		RCRA Listings for Combustible Debris
OH	Hydroxide precipitation	Nitrate Operations	3.5.1, 3.5.3, Att. 4	D006, D007, D008, D009, D011
OM	Oxygen to metal ratio determination	Metal Operation Processes	3.5.1, Att. 4	
OR	Direct oxide reduction	Pyrochemical Processes	3.5.2, Att. 4	
OY	Oxalate precipitation	Nitrate Operations	3.5.1, 3.5.3, Att. 4	
PA	Passivation	Nitrate Operations	3.5.1, 3.5.6, Att. 4	
PAF	Passivation furnaces	Nitrate Operations	3.5.1, Att. 4	
PB	Pu-beryllium source recovery	Chloride Operations	3.5.1, Att. 4	D007, D008, D009
PCH	Plasma chemistry	Metal Operation Processes	3.5.2, Att. 4	D007
PD	Pit disassembly	Metal Operation Processes	3.5.2, Att. 4	
PE	Sputtering process	Metal Operation Processes	3.5.2, Att. 4	D004
PF	Plutonium surfaces	Metal Operation Processes	3.5.2, Att. 4	
PH	Thermal hydride/dehydride	Metal Operation Processes	3.5.2, Att. 4	
PI	Preparation of isotopes	Special Processing	3.5.4, Att. 4	
PIG	Welding	Metal Operation Processes	3.5.3, Att. 4	
PK	Pickling and nitrate holding	Pyrochemical Processes	3.5.11, Att. 4	D006, D007, D008, D011
POSM	Processing out-of-specification material	Special Processing	3.5.3, Att. 4	D007, D011
PPD	Pu pellet dissolution	Special Processing	3.5.11, Att. 4	
PR	Peroxide precipitation	Nitrate Operations	3.5.3, Att. 4	
PRR	Pyrochemical residue recovery	Chloride Operations	3.5.3, 3.5.4, Att. 4	D007, D009
PS	Peroxide precipitation of MSE salts	Nitrate Operations	3.5.2, 3.5.6, Att. 4	
PT	Plutonium-thorium separation	Nitrate Operations	3.5.2, 3.5.6, Att. 4	D007
PTP	Plutonium trichloride preparation	Pyrochemical Processes	3.5.12, Att. 4	D019
PTS	RD&D pretreatment study	Nitrate Operations	3.5.1, 3.5.6, Att. 4	D005, D006, D007, D008, D011
PUB	Pu/Be source recovery	Chloride Operations	3.5.1, Att. 4	D007, D008, D009
PX	Pyrochemical R&D	Special Processing	3.5.6, 3.5.7, 3.5.8, 3.5.9, 3.5.10, Att. 4	D006, D008, D019
RA	Recovery of anodes	Pyrochemical Processes	3.5.6, Att. 4	
RAP	Research alloy preparation	Metal Operation Processes	3.5.3, Att. 4	
RAP2	Research alloy preparation	Metal Operation Processes	3.5.3, Att. 4	
RASS/RSS	Raman spectroscopy system	Miscellaneous Operations	3.5.5, Att. 4	D004, D005, D006, D007, D008, D009, D010, D011, D019

P/S Code	P/S Name	AK Process Report and Primary Report Section in which P/S Code is Described*		RCRA Listings for Combustible Debris
RB	Roasting and blending	Nitrate Operations	3.5.3, Att. 4	
RBJ	Roasting and blending Jr	Nitrate Operations	3.5.3, Att. 4	
RC	Rotary calciner	Nitrate Operations	3.5.1, 3.5.6, Att. 4	D005, D006, D007, D008, D011
RCM	Rich column material ion exchange	Nitrate Operations	3.5.3, Att. 4	
RD	Repackaging into retrievable drums	Miscellaneous Operations	3.5.9, Att. 4	
RFX	Ion exchange	Nitrate Operations	3.5.3, Att. 4	
RL	Radiochemical coating	Metal Operation Processes	3.5.2, Att. 4	
RM	Reduction to metal	Special Processing	3.5.4, 3.5.6, 3.5.7, 3.5.8, 3.5.9, Att. 4	
RO	Oil recovery	Nitrate Operations	3.5.1, 3.5.6, Att. 4	D006, D008, D040
RR	Ion exchange	Nitrate Operations	3.5.3, Att. 4	D006, D007, D008, D009, D011
RS	Pellet sintering	Metal Operation Processes	3.5.1, Att. 4	
SA	Super acid RD&D	Miscellaneous Operations	3.5.3, Att. 4	D007, D009, D018, D038, F002, F003, F005
SB	Scrap burning	Special Processing	3.5.1, Att. 4	D005, D006, D007, D008, D011
SBB	Ca/Al scrubbing RD&D	Special Processing	3.5.9, Att. 4	
SC	Cascade dissolver, G437	Nitrate Operations	3.5.2, Att. 4	D005, D006, D007, D008, D011
SCB	Chlorination Ca/Al scrubbing RD&D	Pyrochemical Processes	3.5.2, Att. 4	
SD	Salt distillation	Pyrochemical Processes	3.5.5, Att. 4	P120
SE	Solvent extraction	Chloride Operations	3.5.3, Att. 4	D007, D008, D009, D039, F002
SL	Scrap leaching	Special Processing	3.5.1, Att. 4	D005, D006, D007, D008, D011
SMP	SP mounting preparation	Miscellaneous Operations	3.5.5, Att. 4	
SO	Super oxidizer, FOOF program	Miscellaneous Operations	3.5.2, Att. 4	D004, D005, D006, D007, D008, D009, D010, D011
SP	Scrap dissolution, G438	Nitrate Operations	3.5.2, Att. 4	D007
SRL	Special recovery line	Metal Operation Processes	3.5.2, Att. 4	
SS	Salt stripping	Pyrochemical Processes	3.5.3, 3.5.4, 3.5.5, 3.5.7, 3.5.8, Att. 4	D006, D008, P120
SSD	Special scrap dissolution	Nitrate Operations	3.5.2, 3.5.6, Att. 4	D006, D007, D008
SSMD	SS material development	Pyrochemical Processes	3.5, Att. 4	D009
STF	Standard fabrication	Miscellaneous Operations	3.5.6, Att. 4	D007

P/S Code	P/S Name	AK Process Report and Primary Report Section in which P/S Code is Described*		RCRA Listings for Combustible Debris
SX	Americium processing silicon removal	Nitrate Operations	3.5.3, 3.5.6, Att. 4	
TDC	Thermal decomposition of cellulose items	Nitrate Operations	3.5.1, Att. 4	D005, D006, D007, D008, D011
TIGR	Thermally induced gallium removal	Metal Operation Processes	3.5.3, Att. 4	
UA	Uranium fabrication	Metal Operation Processes	3.5.2, Att. 4	
UPS	Uranium/plutonium separation	Nitrate Operations	3.5.2, Att. 4	
US	Uranium separation for solid solution feed	Nitrate Operations	3.5.2, 3.5.6, Att. 4	
US2	Uranium separation for non-solid solutions feed	Nitrate Operations	3.5.2, 3.5.6, Att. 4	
VC	Variable CSMO scrap dissolution	Nitrate Operations	3.5.2, 3.5.6, Att. 4	D006, D008
VD	Vapor degreaser and sand blasting	Metal Operation Processes	3.5.2, Att. 4	
VP1	CSMO scrap dissolution	Nitrate Operations	3.5.2, 3.5.6, Att. 4	D009
VP2	Polycube processing	Nitrate Operations	3.5.1, 3.5.6, Att. 4	
VP3	Hydroxide precipitation	Nitrate Operations	3.5.3, 3.5.6, Att. 4	D009
VS	Confirmation, inspection & sampling	Miscellaneous Operations	3.5.5, Att. 4	
VU	Vessel unloading	Special Processing	Att. 4	D005, D008
VUL	Vessel unloading	Nitrate Operations	3.5.1, Att. 4	D005, D008
WE	Welding	Metal Operation Processes	3.5.2, Att. 4	
WLT	Welding leak test	Metal Operation Processes	3.5.3, Att. 4	
WM	Waste management	Miscellaneous Operations	3.5.9, Att. 4	D007, D008, D009, D022, D035, D040, F001, F002, F005
X0	Inactive or unspecified P/S material	Miscellaneous Operations	3.5.9, Att. 4	D007, D008, D009, D022, D035, D040, F001, F002, F005
XES	X-ray energy spectroscopy	Miscellaneous Operations	3.5.5, Att. 4	D004, D005, D006, D007, D008, D009, D010, D011
XO	Inactive or unspecified P/S material	Miscellaneous Operations	3.5.9, Att. 4	D007, D008, D009, D022, D035, D040, F001, F002, F005
XP	RD&D experimental processes	Miscellaneous Operations	3.5.4, Att. 4	D004, D005, D006, D007, D008, D009, D010, D011
ZD	Scrap oxide dissolution	Nitrate Operations	3.5.2, 3.5.6, Att. 4	

* Process AK summary reports: Chloride Operations (TWCP-AK-2.1-002,R.2), Metal Operation Processes (TWCP-AK-2.1-003,R.2), Miscellaneous Operations (TWCP-AK-2.1-004,R.2), Nitrate Operations (TWCP-AK-

2.1-005,R.2), Pyrochemical Processes (TWCP-AK-2.1-006,R.2), and Special Processing (TWCP-AK-2.1-007, R.2)

ACCEPTABLE KNOWLEDGE SUMMARY FOR TA-55-19

Waste Stream Number and Title:	TA-55-19, Mixed Combustible Debris Waste
Summary Category Group:	S5000
Waste Matrix Code and Description:	S5300
TWBIR:	LA-M16
TRUCON Codes:	LA116A, LA116B, LA116C, LA116D, LA116E, LA116F, LA116H, LA116I
Maximum Layers of Packaging:	6
Site:	LANL
Waste-Generating Facility:	TA-55, Plutonium Facility (building PF-4), all wings
Time Period of Generation:	1978–present
Defense Waste Status:	Defense-related transuranic (TRU) waste. There is no historical record or evidence of spent nuclear fuel or high-level waste ever having been handled at the facility.
Waste Stream Volume (as stored):	4173 containers (873 m^3) (including lot TA-55-19A)
Waste Stream Volume (after repackaging):	850 SWBs, 3873 drums (2390 m^3)

Facility Mission

TA-55 has extensive capabilities for the extraction and recovery of plutonium from residues and scraps generated from operations at various LANL facilities and other DOE sites in the defense complex. The recovered plutonium is converted into pure plutonium feedstock. These manufacturing and recovery operations, associated maintenance operations, and TA-55 plutonium research are the sources of TRU-contaminated scrap, residues, and debris generated at TA-55. The scrap and residues are processed to recover as much plutonium as practicable before disposal. Wastes are generated from plutonium recovery and purification for defense and non-defense programs; these wastes are generated and produced in the same rooms and gloveboxes and were not segregated based on funding source until August 27, 1998.

Waste Generating Processes

Plutonium manufacturing, recovery, and research operations at the TA-55 Plutonium Facility, as well as associated maintenance operations, generate TRU wastes. These operations include:

- Preparation of ultra-pure plutonium metals, alloys, and compounds
- Preparation of specific alloys, including casting and machining these materials into specific shapes
- Determination of the high-temperature thermodynamic properties of plutonium
- Reclamation of plutonium from scrap and residues produced by numerous feed sources
- Disassembly of components for inspection and analysis
- Manufacturing of parts on a limited basis

Process Feed

Plutonium metal or metal alloys; plutonium oxides and hydroxide cakes; other actinide metals or metal alloys and oxides; plutonium scrap; disassembled weapons components (pits); plutonium-beryllium sources; pyrochemical salts; reactor fuel pellets; crucible pieces; ash; residues from other DOE facilities; anode heels; and analytical laboratory solutions.

Waste Material Parameter List

Waste materials: cellulosics, rubber, plastics; iron-based metals and alloys (less than 5 percent by volume)

Packaging materials: steel, plastics

Waste Stream Description

The combustible debris waste stream includes rubber, plastic-based, and cellulose-based waste generated at the facility. Plastic-based waste includes, but may not be limited to, polyethylene and vinyl tape; gloves; plastic vials; polystyrene; Tygon tubing; polyvinyl chloride plastic; Teflon products; Plexiglas; and dry box gloves (unleaded neoprene base). Cellulose-based waste includes, but may not be limited to, rags, wood, paper, and cardboard; laboratory coats and coveralls; booties and cotton gloves, and similar materials. The waste may also contain a small fraction (less than 5 percent) of non-combustible solids (e.g., scrap metal, metal lids, zippers, discarded tools).

RCRA Characterization

TA-55-19 is conservatively assigned the following EPA Hazardous Waste Numbers (HWNs). Many of the HWNs are time-dependent, and apply only to containers generated by a particular process over a specific period of time, as documented in process AK reports.

- F001, F002, F003 and F005
- D004, D005, D006, D007, D008, D009, D010, D011, D018, D019, D021, D022, D035, D038, D039, D040

- Drums containing waste generated from P/S codes SD and SS between 02/98 and 06/98 are segregated as a subset of TA-55-19 due to the potential presence of vanadium pentoxide (EPA HWN P120). (See separate AK summary for waste stream lot TA-55-19A).

Radionuclide Content

These waste streams predominantly contain a variety of plutonium material types with different well-defined isotopic compositions. Americium-241, neptunium-237, and uranium-234 may be present at detectable concentrations as decay products of their plutonium precursors. Some of the processes separate plutonium from americium and uranium. The waste will usually be enriched in americium-241 and uranium-234 relative to plutonium, but may also be depleted in some cases. Some waste may contain uranium and its decay products (e.g., uranium-234) from one of several uranium material types used as feed material. In addition, trace levels of cesium-137 and protactinium-231 may be present because of their widespread presence as contaminants in TA-55 operations. Other waste may contain various radionuclides used as feed materials for producing detector materials, including americium-241, americium-243, cerium-144, curium-244, protactinium-231, neptunium-237, thorium-232, thorium-232 enriched in thorium-230, uranium-233, and depleted uranium.

Primary References for Documentation of Acceptable Knowledge

Los Alamos National Laboratory Transuranic Waste Characterization Sampling Plan (TWCP-PLAN-0.2.7-001,R.3)

Process Acceptable Knowledge Summary Report for Chloride Operations at TA-55 (TWCP-AK-2.1-002)

Process Acceptable Knowledge Summary Report for Metal Operation Processes at TA-55 (TWCP-AK-2.1-003)

Process Acceptable Knowledge Summary Report for Miscellaneous Operations at TA-55 (TWCP-AK-2.1-004)

Process Acceptable Knowledge Summary Report for Nitrate Operations at TA-55 (TWCP-AK-2.1-005)

Process Acceptable Knowledge Summary Report for Pyrochemical Processes at TA-55 (TWCP-AK-2.1-006)

Process Acceptable Knowledge Summary Report for Special Processing at TA-55 (TWCP-AK-2.1-007)

ACCEPTABLE KNOWLEDGE SUMMARY FOR TA-55-19A

Waste Stream Number and Title:	TA-55-19A, Mixed Combustible Debris Waste with P120 **NOTE:** This is a subset (i.e., lot) of waste stream TA-55-19. It is distinguished from TA-55-19 only insofar as the waste has the potential to include vanadium pentoxide (EPA HWN P120).
Summary Category Group:	S5000
Waste Matrix Code and Description:	S5300
TWBIR:	LA-M16
TRUCON Codes:	LA116A, LA116B, LA116C, LA116D, LA116E, LA116F, LA116H, LA116I
Maximum Layers of Packaging:	6
Site:	LANL
Waste-Generating Facility:	TA-55, Plutonium Facility (building PF-4), all wings
Time Period of Generation:	02/98–06/98
Defense Waste Status:	Defense-related TRU waste. There is no historical record or evidence of spent nuclear fuel or high-level waste ever having been handled at the facility.
Waste Stream Volume (as stored):	12 containers (2.5 m^3)
Waste Stream Volume (after repackaging):	Not yet determined

Facility Mission

TA-55 has extensive capabilities for the extraction and recovery of plutonium from residues and scraps generated from operations at various LANL facilities and other DOE sites in the defense complex. The recovered plutonium is converted into pure plutonium feedstock. These manufacturing and recovery operations, associated maintenance operations, and TA-55 plutonium research are the sources of TRU-contaminated scrap, residues, and debris generated at TA-55. The scrap and residues are processed to recover as much plutonium as practicable before disposal. Wastes are generated from plutonium recovery and purification for defense and non-defense programs; these wastes are generated and produced in the same rooms and gloveboxes and were not segregated based on funding source until August 27, 1998.

Waste Generating Processes

Plutonium manufacturing, recovery, and research operations at the TA-55 Plutonium Facility, as well as associated maintenance operations, generate TRU wastes. These operations include:

- Preparation of ultra-pure plutonium metals, alloys, and compounds
- Preparation of specific alloys, including casting and machining these materials into specific shapes
- Determination of the high-temperature thermodynamic properties of plutonium
- Reclamation of plutonium from scrap and residues produced by numerous feed sources
- Disassembly of components for inspection and analysis
- Manufacturing of parts on a limited basis

Process Feed

Plutonium metal or metal alloys; plutonium oxides and hydroxide cakes; other actinide metals or metal alloys and oxides; plutonium scrap; disassembled weapons components (pits); plutonium-beryllium sources; pyrochemical salts; reactor fuel pellets; crucible pieces; ash; residues from other DOE facilities; anode heels; and analytical laboratory solutions.

Waste Material Parameter List

Waste materials: cellulosics, rubber, plastics; iron-based metals and alloys (less than 5 percent by volume)

Packaging materials: steel, plastics

Waste Stream Description

The combustible debris waste stream includes rubber, plastic-based, and cellulose-based waste generated at the facility. Plastic-based waste includes, but may not be limited to, polyethylene and vinyl tape; gloves; plastic vials; polystyrene; Tygon tubing; polyvinyl chloride plastic; Teflon products; Plexiglas; and dry box gloves (unleaded neoprene base). Cellulose-based waste includes, but may not be limited to, rags, wood, paper, and cardboard; laboratory coats and coveralls; booties and cotton gloves, and similar materials. The waste may also contain a small fraction (less than 5 percent) of non-combustible solids (e.g., scrap metal, metal lids, zippers, discarded tools).

RCRA Characterization

TA-55-19A is conservatively assigned the following EPA Hazardous Waste Numbers (HWNs). Many of the HWNs are time-dependent, and apply only to containers generated by a particular process over a specific period of time, as documented in process AK reports.

- F001, F002, F003 and F005

- D004, D005, D006, D007, D008, D009, D010, D011, D018, D019, D021, D022, D035, D038, D039, D040
- P120

Radionuclide Content

These waste streams predominantly contain a variety of plutonium material types with different well-defined isotopic compositions. Americium-241, neptunium-237, and uranium-234 may be present at detectable concentrations as decay products of their plutonium precursors. Some of the processes separate plutonium from americium and uranium. The waste will usually be enriched in americium-241 and uranium-234 relative to plutonium, but may also be depleted in some cases. Some waste may contain uranium and its decay products (e.g., uranium-234) from one of several uranium material types used as feed material. In addition, trace levels of cesium-137 and protactinium-231 may be present because of their widespread presence as contaminants in TA-55 operations. Other waste may contain various radionuclides used as feed materials for producing detector materials, including americium-241, americium-243, cerium-144, curium-244, protactinium-231, neptunium-237, thorium-232, thorium-232 enriched in thorium-230, uranium-233, and depleted uranium.

Primary References for Documentation of Acceptable Knowledge

Los Alamos National Laboratory Transuranic Waste Characterization Sampling Plan (TWCP-PLAN-0.2.7-001,R.3)

Process Acceptable Knowledge Summary Report for Chloride Operations at TA-55 (TWCP-AK-2.1-002)

Process Acceptable Knowledge Summary Report for Metal Operation Processes at TA-55 (TWCP-AK-2.1-003)

Process Acceptable Knowledge Summary Report for Miscellaneous Operations at TA-55 (TWCP-AK-2.1-004)

Process Acceptable Knowledge Summary Report for Nitrate Operations at TA-55 (TWCP-AK-2.1-005)

Process Acceptable Knowledge Summary Report for Pyrochemical Processes at TA-55 (TWCP-AK-2.1-006)

Process Acceptable Knowledge Summary Report for Special Processing at TA-55 (TWCP-AK-2.1-007)

ACCEPTABLE KNOWLEDGE SUMMARY FOR TA-55-20

Waste Stream Number and Title:	TA-55-20, Non-mixed Combustible Debris Waste
Summary Category Group:	S5000
Waste Matrix Code and Description:	S5300
TWBIR:	LA-T16
TRUCON Codes:	LA116A, LA116B, LA116C, LA116D, LA116E, LA116F, LA116H, LA116I
Maximum Layers of Packaging:	6
Site:	LANL
Waste-Generating Facility:	TA-55, Plutonium Facility (building PF-4), all wings
Time Period of Generation:	1979–present
Defense Waste Status:	Defense-related TRU waste. There is no historical record or evidence of spent nuclear fuel or high-level waste ever having been handled at the facility.
Waste Stream Volume (as stored):	281 containers (59 m^3)
Waste Stream Volume (after repackaging):	Not yet determined

Facility Mission

TA-55 has extensive capabilities for the extraction and recovery of plutonium from residues and scraps generated from operations at various LANL facilities and other DOE sites in the defense complex. The recovered plutonium is converted into pure plutonium feedstock. These manufacturing and recovery operations, associated maintenance operations, and TA-55 plutonium research are the sources of TRU-contaminated scrap, residues, and debris generated at TA-55. The scrap and residues are processed to recover as much plutonium as practicable before disposal. Wastes are generated from plutonium recovery and purification for defense and non-defense programs; these wastes are generated and produced in the same rooms and gloveboxes and were not segregated based on funding source until August 27, 1998.

Waste Generating Processes

Plutonium manufacturing, recovery, and research operations at the TA-55 Plutonium Facility, as well as associated maintenance operations, generate TRU wastes. These operations include:

- Preparation of ultra-pure plutonium metals, alloys, and compounds

- Preparation of specific alloys, including casting and machining these materials into specific shapes
- Determination of the high-temperature thermodynamic properties of plutonium
- Reclamation of plutonium from scrap and residues produced by numerous feed sources
- Disassembly of components for inspection and analysis
- Manufacturing of parts on a limited basis

Process Feed

Plutonium metal or metal alloys; plutonium oxides and hydroxide cakes; other actinide metals or metal alloys and oxides; plutonium scrap; disassembled weapons components (pits); plutonium-beryllium sources; pyrochemical salts; reactor fuel pellets; crucible pieces; ash; residues from other DOE facilities; anode heels; and analytical laboratory solutions.

Waste Material Parameter List

Waste materials: cellulosics, rubber, plastics; iron-based metals and alloys (less than 5 percent by volume)

Packaging materials: steel, plastics

Waste Stream Description

The combustible debris waste stream includes rubber, plastic-based, and cellulose-based waste generated at the facility. Plastic-based waste includes, but may not be limited to, polyethylene and vinyl tape; gloves; plastic vials; polystyrene; Tygon tubing; polyvinyl chloride plastic; Teflon products; Plexiglas; and dry box gloves (unleaded neoprene base). Cellulose-based waste includes, but may not be limited to, rags, wood, paper, and cardboard; laboratory coats and coveralls; booties and cotton gloves, and similar materials. The waste may also contain a small fraction (less than 5 percent) of non-combustible solids (e.g., scrap metal, metal lids, zippers, discarded tools).

RCRA Characterization

No HWNs apply to containers in waste stream TA-55-20.

Radionuclide Content

These waste streams predominantly contain a variety of plutonium material types with different well-defined isotopic compositions. Americium-241, neptunium-237, and uranium-234 may be present at detectable concentrations as decay products of their plutonium precursors. Some of the processes separate plutonium from americium and uranium. The waste will usually be enriched in americium-241 and uranium-234 relative to plutonium, but may also be depleted in some cases. Some waste may contain uranium and its decay products (e.g., uranium-234) from one of several uranium material types used as feed material. In addition, trace levels of cesium-137 and

protactinium-231 may be present because of their widespread presence as contaminants in TA-55 operations. Other waste may contain various radionuclides used as feed materials for producing detector materials, including americium-241, americium-243, cerium-144, curium-244, protactinium-231, neptunium-237, thorium-232, thorium-232 enriched in thorium-230, uranium-233, and depleted uranium.

Primary References for Documentation of Acceptable Knowledge

Los Alamos National Laboratory Transuranic Waste Characterization Sampling Plan (TWCP-PLAN-0.2.7-001,R.3)

Process Acceptable Knowledge Summary Report for Chloride Operations at TA-55 (TWCP-AK-2.1-002)

Process Acceptable Knowledge Summary Report for Metal Operation Processes at TA-55 (TWCP-AK-2.1-003)

Process Acceptable Knowledge Summary Report for Miscellaneous Operations at TA-55 (TWCP-AK-2.1-004)

Process Acceptable Knowledge Summary Report for Nitrate Operations at TA-55 (TWCP-AK-2.1-005)

Process Acceptable Knowledge Summary Report for Pyrochemical Processes at TA-55 (TWCP-AK-2.1-006)

Process Acceptable Knowledge Summary Report for Special Processing at TA-55 (TWCP-AK-2.1-007)

WASTE GENERATION SUMMARY DIAGRAM

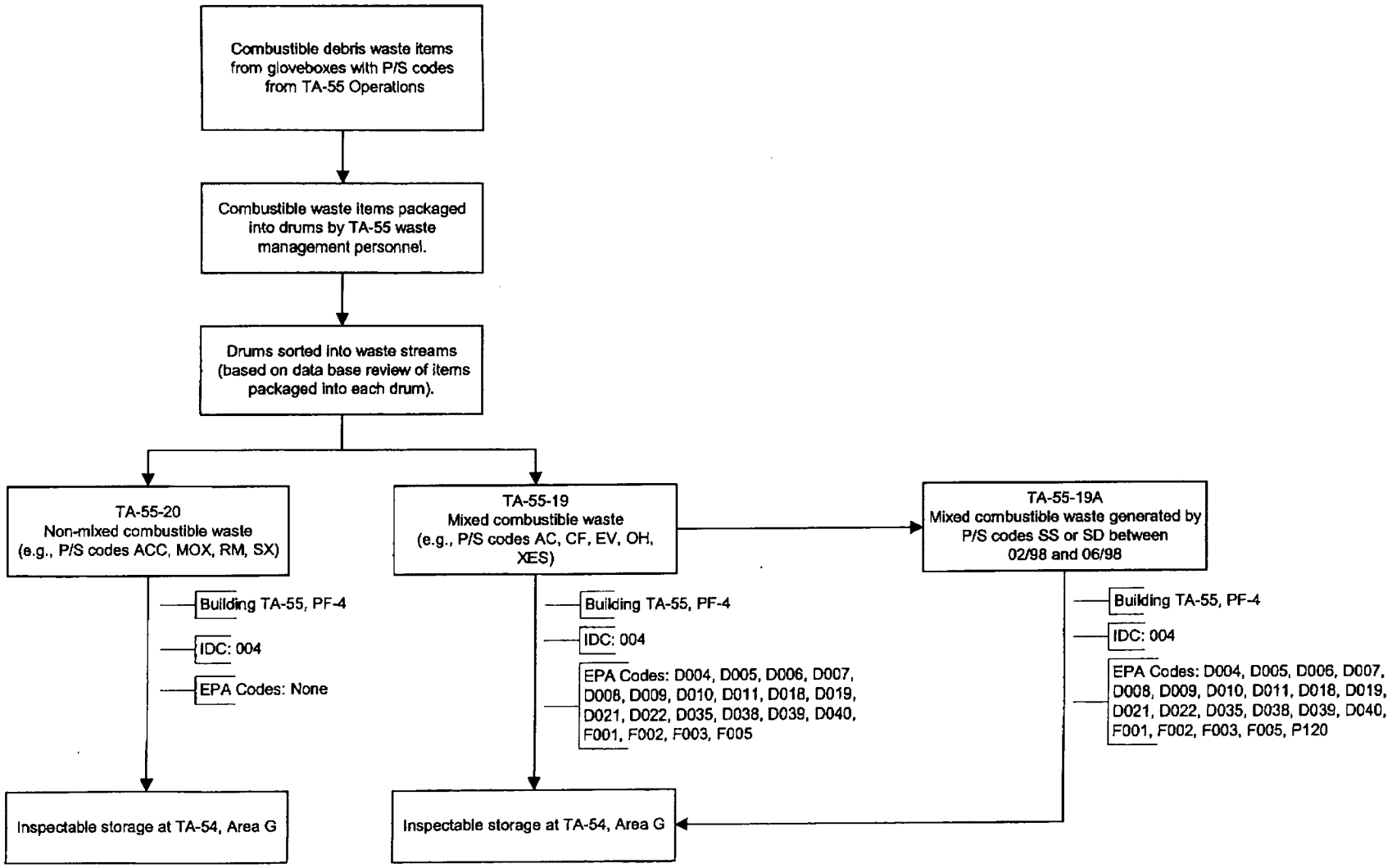

ACCEPTABLE KNOWLEDGE SUMMARY REPORT FOR WASTE STREAMS TA-55-19, LOT TA-55-19A, AND TA-55-20

1.0 INTRODUCTION

All transuranic (TRU) waste must be sufficiently characterized and certified before it is shipped to the Waste Isolation Pilot Plant (WIPP). The U.S. Environmental Protection Agency (EPA) allows use of acceptable knowledge (AK) for waste characterization, and defines AK in its guidance document, *Waste Analysis at Facilities that Generate, Treat, Store and Dispose of Hazardous Waste*. Attachment B, Waste Analysis Plan, to the *Hazardous Waste Facility Permit Issued to the Waste Isolation Pilot Plant* (EPA No. NM4890139088) (WIPP WAP) defines AK information and provides guidelines on how AK should be obtained and documented.

This AK summary report was prepared in accordance with *Acceptable Knowledge Documentation* (TWCP-QP-1.1-021). The primary purpose of this report is to systematically organize, evaluate, and summarize AK information about characteristics of the wastes generated by the Plutonium Facility at Technical Area (TA) 55, one of the TRU waste generators at Los Alamos National Laboratory (LANL). By doing so, this report provides technical support for assignment of specific waste containers to the waste stream.

2.0 METHODOLOGY USED TO SEARCH FOR AK RECORDS

The AK search for the information related to waste streams TA-55-19 (including lot TA-55-19A) and TA-55-20 covered:

- Review of the *Los Alamos National Laboratory Transuranic Waste Characterization Sampling Plan* (TWCP-PLAN-0.2.7-001) (Sampling Plan) that includes information regarding all waste streams, including TA-55-19 and TA-55-20

  NOTE: The primary sources of waste generator information presented in the AK Information Summary are:

  - The "Los Alamos National Laboratory Transuranic Waste Database" maintained by the Facility Waste Operations (FWO)-Integrated Information Management (IIM) group for all TRU waste in storage at TA-54, in accordance with AP-SWO-006
  - The TA-55 Waste Management System (WMS) database described in QA-TP-WMS-000.001 and in Section 7.2 of the *TA-55 Transuranic Waste Interface Document* (TWID)
  - Archived older versions of the TA-55 WMS database (TWCP-6988)

- Review of documents related to the waste generation and waste management activities at TA-55 as documented in the Acceptable Knowledge Roadmap (Attachment 1)

- Interviews with personnel involved with waste generation and waste management at TA-55 as documented in process AK reports listed in the Acceptable Knowledge Roadmap (Attachment 1)

- Review of process AK reports for TA-55 processes (as discussed below)

- Analysis of processes generating waste, as discussed in the process AK reports and in this report

The Transuranic Waste Characterization/Certification Project (TWCP) Records Management/Document Control (RMDC) Center contains copies of the documents that are referenced in this summary report. Unclassified Controlled Nuclear Information (UCNI) is reported in records, rather than included in this report. Such records are identified as UCNI in the Acceptable Knowledge Roadmap (Attachment 1).

This AK summary report is based on detailed information compiled in a set of closely related reports about TRU waste generating activities at TA-55. For convenience in organizing AK for plutonium processing at this facility, the processes were categorized into six operational areas. The multiple processes in each area are described in detail in the following six process AK reports:

- *Process Acceptable Knowledge Summary Report for Chloride Operations at TA-55* (TWCP-AK-2.1-002)

- *Process Acceptable Knowledge Summary Report for Metal Operation Processes at TA-55* (TWCP-AK-2.1-003)

- *Process Acceptable Knowledge Summary Report for Miscellaneous Operations at TA-55* (TWCP-AK-2.1-004)

- *Process Acceptable Knowledge Summary Report for Nitrate Operations at TA-55* (TWCP-AK-2.1-005)

- *Process Acceptable Knowledge Summary Report for Pyrochemical Processes at TA-55* (TWCP-AK-2.1-006)

- *Process Acceptable Knowledge Summary Report for Special Processing at TA-55* (TWCP-AK-2.1-007)

The process AK reports contain information on over 175 individual processes that have each been assigned a unique identifier called a process/status (P/S) code. For example, the nitrate operations report (*Process Acceptable Knowledge Summary Report for Nitrate Operations at TA-55* [TWCP-AK-2.1-005,R.2]) covers waste generation processes and

characteristics for over 80 different processes, each with its own P/S code. The search and compilation of AK information was based on P/S code, because that is the greatest level of process detail recorded in waste generator records. However, as described in section 3.2, TA-55 TRU waste items have always been segregated and packaged into waste containers based on the physical form and material type content of the waste, without regard to process of origin (i.e., P/S code). In order to mitigate confusion resulting from these two different ways of categorizing TA-55 waste (by process of generation and P/S code or by material content and waste stream number), separate AK reports have been prepared for each categorization method (i.e., process AK reports for process areas, and AK summary reports for waste streams). The AK information search was performed based on the processes used at TA-55 and tracked by the P/S codes, and it is summarized in the process AK reports.

This AK summary report summarizes AK information specific to the combustible debris waste streams TA-55-19 (including waste stream lot TA-55-19A) and TA-55-20.

3.0 DESCRIPTION OF THE WASTE STREAM

3.1 Facility and Mission

TA-55 has extensive capabilities for the extraction and recovery of plutonium from residues and scraps generated from operations at various LANL facilities and other DOE sites in the defense complex. The recovered plutonium is converted into pure plutonium feedstock. These manufacturing and recovery operations, associated maintenance operations, and TA-55 plutonium research are the sources of TRU-contaminated scrap, residues, and debris generated at TA-55. The scrap and residues are processed to recover as much plutonium as practicable before disposal. Wastes are generated from plutonium recovery and purification for defense and non-defense programs; these wastes are generated and produced in the same rooms and gloveboxes and were not segregated based on funding source until August 27, 1998.

The combustible waste streams TA-55-19 and TA-55-20 were generated at the TA-55 Plutonium Facility (Building PF-4) as debris waste from process operations and glovebox maintenance involved in plutonium recovery. For this reason, the waste streams are defense related. However, waste also was produced from "special process" and research-related activities. These wastes were not segregated until 1998, but rather were commingled in the final waste containers to such an extent that segregation is not possible on the basis of waste generating process or glovebox location (TWCP-887). The waste was also co-mingled with room trash related to these same operations (both defense and non-defense), which was initially boxed as low-level waste but was returned for discard in drums as TRU waste when on-site assay results showed it exceeded the low-level waste threshold value (TWCP-816).

A LANL site map and a detailed map of the buildings at TA-55, including Building PF-4, are shown in Attachment 2.

3.2 Basis, Rationale, and Assumptions Used to Delineate the Waste Streams

The basis for delineation of TA-55 waste streams was established by the evolving set of LANL and TA-55 waste management plans and site-specific procedures, which date back to the start of operations at the Plutonium Facility in 1978 (TWCP-352, TWCP-697, TWCP-700, TWCP-701, TWCP-3943). The stated guidance and practice from the beginning, continuing to the present day, has been to handle and package all combustible and noncombustible debris waste in a similar fashion, regardless of the process of origin. Relevant details of these planning and implementation documents are summarized in this section, to provide background information to support the process used by TWCP to assign TA-55 waste containers to specific waste streams. Waste stream assignment is made on the basis of waste generator information compiled in the TWCP waste container data base, which comprises the bulk of the Sampling Plan. Waste generator information is reviewed to identify the types and sources of waste items present in each drum, which are key factors in the evaluation of the most appropriate waste summary group, waste matrix code, and potential for the presence of hazardous constituents in that drum.

3.2.1 Waste Packaging at TA-55

Inspection, collection, documentation and packaging operations of solid, certifiable TRU wastes at TA-55 are conducted in PF-4 by a waste management section or team (TWCP-352, TWCP-700, TWCP-701, TWCP-3943). Wastes from all TRU waste-generating activities at TA-55 are handled and packaged by this team. Materials are considered waste only when they have been received and processed by the waste management team. Waste segregation schemes used by this team have evolved since operations began at the Plutonium Facility in 1978.

In 1978, the standard operating procedure for waste management at TA-55 stated the guiding philosophy of minimizing the amount of waste generated and minimizing the plutonium content of that waste (TWCP-3943). Discard Limits (DL) for plutonium in various types of waste matrices were established by the waste-generating group, and approved by the LANL division office and the DOE Albuquerque Operations Office. Personnel were requested to sort potentially recyclable TRU waste items (i.e., those containing potentially recoverable amounts of plutonium) into classes such as rubber, plastics, rags, non-Pu metals, glass, oils, cans, sweepings, etc. These materials were then assayed. Based upon its plutonium level relative to the DL, material was either sent to recovery operations or to "20-year" retrievable storage. All liquids, including oils, were required to be sent to recovery operations

for processing. Liquids were explicitly prohibited from any container of solid waste materials.

In 1984, a lab-wide TRU Waste Certification Plan was adopted for newly generated TRU waste (TWCP-697). Each LANL waste generator was required to develop an attachment to this plan to define the details of the waste certification functions and controls that applied to their specific processes and waste streams. TA-55 prepared an attachment in March 1987 for contact-handled combustible and noncombustible solid waste (TWCP-701), defined as follows:

- Combustible waste forms included materials that could be reduced to an ash if desired but that did not require further processing to meet the WIPP WAC (TWCP-701). (This definition is still current.) Subcategories included plastic-base, cellulose-base and miscellaneous (graphite and graphite crucibles). It was acceptable for the combustible waste stream to include some unspecified "small" fraction of noncombustible solids such as scrap metals.

- Noncombustible waste forms included materials that could not be reduced to ash but that did meet the WIPP WAC without further processing (TWCP-701). The two subcategories were metals and non-metals. The non-metal wastes included glass, fiberglass heating mantles, porcelain crucibles, ceramic furnace tube inserts, and leaded glovebox gloves. It was acceptable for the noncombustible waste stream to include some unspecified "small" fraction of combustible solids, and that could be contained in plastics. For WIPP purposes, any waste forms that were chemically compatible and that met the WAC, could be combined into a single waste container.

In 1995, a new TRU Waste Certification Plan was adopted, including a new attachment that formalizes how the TA-55 waste management team currently segregates newly generated wastes into waste streams (TWCP-700). Waste materials are segregated:

- by radioisotope, to meet nondestructive assay (NDA) and gas generation requirements

- by material matrix, to meet NDA and TRUCON requirements

- by hazardous constituents, to meet RCRA and Department of Transportation (DOT) requirements

Combustible waste forms include plastic base and cellulose base (TRUCON code 116), but graphite waste was moved to the

noncombustible category. Noncombustible debris waste forms are broken down to a finer level of classification than had previously been used:

- metals (TRUCON code 117)
- glass (TRUCON code 118)
- HEPA filters (TRUCON code 119)
- leaded gloves (TRUCON code 123)
- salts (TRUCON code 124)
- graphite (TRUCON code 115)

In addition, each major waste form includes provisions for small quantities of unspecified waste with similar properties. This provision is necessary to allow for infrequently encountered waste items.

3.2.2 Waste Stream Delineation for TA-55

From the beginning of operations at TA-55, the physical description of each waste item generated was documented on a Waste Origination and Disposition Form (WODF) by the waste generator according to controlled procedures. The P/S code for waste items was sometimes also documented on this form. Starting in 1987, the TA-55 Plutonium Facility began its current system of tracking waste items both by the process from which they originated as well as by their material content. Waste items are labeled with an item identification (ID) code that contains information on the waste material parameter of the item and an embedded P/S code that corresponds to the process that produced the waste item (although recording of P/S codes was inconsistent until about 1990). In the packaging process, a standard form, the Discardable Waste Log Sheet (DWLS), was used to list each ID code and record its matrix material. This form was signed by the waste packager and approved by quality assurance personnel. Both the WODF and DWLS for each TRU waste drum have been maintained as hard copy records by the generator. For waste stream TA-55-19, example copies of these container records (for combustible debris) are included in Attachment 4. Note that this waste container (LA00000056636) contains waste items generated by three different P/S codes (CXL, ED, and SC), each with its own completed WODF.

Waste items are packaged into waste containers based on the material content of the waste, without regard to P/S code. This practice complicates AK tracking because a single waste container can include waste items from several P/S codes. In the Sampling Plan, TA-55 wastes have been assigned to waste streams based on the waste segregation schemes used by TA-55:

- First by radioisotope content (Pu-238 or Pu-239 material type)
- Then by material matrix (combustible, noncombustible, metal, glass, etc. waste types)
- Then by hazardous waste status (mixed, non-mixed, or special case waste streams)

Waste stream delineation was performed using waste generator information (such as the WODF and DWLS) that has been compiled in an electronic data base that is part of the Sampling Plan. Because waste items from several different P/S codes were combined into each waste drum, a special sort on the P/S code of each waste item in a drum was necessary to determine if the drum contained all non-mixed items, some or all mixed-waste items, or a special case item (such as an item from P/S code SS carrying the EPA Hazardous Waste Number (HWN) P120). If the P/S code information was missing for any item in a waste drum (as was the case for many older wastes), that drum was conservatively assigned to the mixed-waste stream. Fortunately, the special case wastes carrying the HWN P120 were generated relatively recently, such that the data base records for those items are complete.

3.2.3 Waste Container Labeling

The net effect of the waste packaging system used at TA-55 is that several HWNs are conservatively assigned to individual waste streams for the purposes of WIPP disposal, because the WIPP WAP requires HWN assignment on a waste stream rather than a waste container basis. For the purposes of generator and on-site storage, however, LANL labels waste on a container by container basis. Thus, the hazardous labels on containers in storage at LANL should not be expected to correspond to the HWNs assigned to the waste stream through this AK summary report. Hazardous labels are updated to meet WIPP disposal requirements just before loading waste containers into the Transuranic Package Transporter-Model II (TRUPACT-II) for shipping to the WIPP.

3.3 Waste Physical Form and Content Description

The TA-55-19 and TA-55-20 waste streams are defined as combustible debris waste streams (Sampling Plan, Appendix D), with TA-55-19 being a mixed-waste stream and TA-55-20 its non-mixed counterpart. TA-55-19A is a small substream lot, distinguished from TA-55-19 by the addition of HWN P120. Both of these waste streams include paper, rags, plastic, rubber, and plastic-based and cellulose-based waste generated at the facility. Plastic-based waste includes, but may not be limited to, polyethylene and vinyl tape, gloves, plastic vials, polystyrene, Tygon tubing, polyvinyl chloride plastic, Teflon products, Plexiglas, and dry box gloves

(unleaded neoprene base). Cellulose-based waste includes, but may not be limited to, rags, wood, paper, and cardboard; laboratory coats and overalls; booties and cotton gloves, and similar materials. The waste may also contain a small fraction (generally less than 5 percent) of non-combustible solids (scrap metal, metal lids, and clothing zippers) (Sampling Plan, Appendix D).

Leaded gloves are also generated as process waste in TA-55 operations. Prior to 1987, leaded gloves were discarded in the combustible and non-combustible debris waste streams, including TA-55-19. Between 1987 and May 1992, leaded gloves began to be segregated from combustible debris and discarded in the metal debris waste stream because of concern that explosive lead oxides might form if the combustible debris waste were ever incinerated. Since May 1992, leaded gloves have been routinely segregated from other metal debris waste and assigned to a separate leaded-glove waste stream.

3.4 Waste Volume and Time Period of Waste Generation

The following information is from Appendix D of the Sampling Plan (R.3). These inventories are expected to change because the Sampling Plan is continually updated as new waste information is obtained.

- TA-55-19 includes 4173 containers (873 cubic meters), that were generated from 1978 to the present time.

  NOTE: Waste stream lot TA-55-19A is a subset of TA-55-19 that contains 12 containers (2.5 m^3) with waste items generated from P/S codes SD and SS between February and June 1998 (Attachment 6).

- TA-55-20 includes 281 containers (59 cubic meters), that were generated from 1979 to the present time.

3.5 Waste Stream Generation Processes

3.5.1 Overview

The TA-55-19 and TA-55-20 combustible debris waste streams were generated from combustible materials used in processes to recover plutonium from residues, metal fabrication, and research and development (R&D) activities. The variety of plutonium handling operations includes:

- Preparing ultra-pure plutonium metals, alloys, and compounds
- Preparing (on a large scale) specific alloys, including casting and machining these materials into specific shapes

- Determining high-temperature thermodynamic properties of plutonium
- Reclaiming plutonium from scrap and residues produced by numerous feed sources
- Disassembling components for inspection and analysis
- Manufacturing of parts on a limited basis
- Processing mixtures of plutonium and uranium oxides for reactor fuels.

The manufacturing and research operations performed at TA-55 in the recovery of plutonium results in the production of plutonium-contaminated scrap and residues. These residues are processed to recover as much plutonium as is practical (TWCP-352). TA-55 has extensive capabilities for the extraction and recovery of plutonium from residues and scrap generated from operations at various LANL, other U.S. Department of Energy (DOE) facilities, and commercial radioactive sources. These recovery operations, along with associated maintenance operations, and TA-55 plutonium research are the sources of TRU waste generated at TA-55.

Plutonium processing operations generate contaminated combustible waste from:

- Plastic materials that result in combustible waste such as Tygon tubing, polyvinyl chloride vials, plastic bags, etc.
- Cellulose-based cleaning aids and personal protective equipment such as rags, paper wipes, laboratory coats, coveralls, booties, etc.
- Rubber- and Teflon-based products (such as rubber gloves, Teflon tape, gaskets, stoppers, etc.) used in operations

3.5.2 Process Flow Diagrams

Detailed information about the TA-55 plutonium recovery processes can be found in the process AK reports. For purposes of the AK search, and to allow convenient referral to and referencing of the process AK reports in this waste stream AK summary report, the processes have been divided into six major areas:

- Chloride Operations (TWCP-AK-2.1-002)
- Nitrate Operations (TWCP-AK-2.1-005)

- Miscellaneous Operations (TWCP-AK-2.1-004)
- Special Processing (TWCP-AK-2.1-007)
- Metal Operation Processes (TWCP-AK-2.1-003)
- Pyrochemical Processes (TWCP-AK-2.1-006)

Generalized flow diagrams for these six operational areas are presented as Attachment 3 and indicate P/S codes for the various processes. The full block flow diagram for plutonium processing and waste management at TA-55 is given in reference TWCP-886.

The following subsections describe the processes that generated debris waste assigned to the TA-55-19 and TA-55-20 waste streams. The potential for RCRA-regulated constituents to be present due to feed materials and chemical use in these processes is summarized in Sections 3.6.1 and 3.6.3. The applicability of EPA HWNs as a result of this potential is specified in Section 8.

3.5.3 Chloride Operations

P/S codes CL, CLRD, CLS, CS, CSE, CW, CX, CXL, LD, MB, MS, PB, PRR, PUB, and SE

A detailed description of chloride operations can be found in *Process Acceptable Knowledge Summary Report for Chloride Operations at TA-55* (TWCP-AK-2.1-002).

The overall goal of the chloride operations is to recover plutonium from scrap and residues and produce a purified plutonium oxide for conversion to metal. The primary feed sources are plutonium residues from pyrochemical operations, plutonium-beryllium (PuBe) neutron sources, analytical laboratory solutions, and residues from other DOE facilities. Chloride operations can be broken down into the following process steps:

- Pretreatment
- Dissolution
- Purification
- Hydroxide precipitation

Pretreatment may include sorting, crushing, and/or pulverizing feed materials prior to being fed into later steps of chloride operations. A separate pretreatment procedure is the decladding of plutonium-beryllium sources. The PuBe metal alloy is removed from the sources, which are then entered into the chloride line for plutonium recovery along with other materials.

In the dissolution step, hydrochloric acid is used to leach and dissolve plutonium from scrap, crucibles, residues, and various solutions, including solutions from the analytical chemistry laboratory. Enriched solutions undergo further purification (see next paragraph), and solid wastes are discarded as debris waste or sent to cement fixation in nitrate operations (Section 3.5.4).

Purification steps may include solvent extraction, ion exchange, and oxalate precipitation, depending on the chemical nature of the material to be purified. Ion exchange columns are used to collect plutonium and separate out impurities. Enriched solutions may be further treated with oxalic acid to precipitate plutonium oxalate, which is converted to plutonium oxide.

In the hydroxide precipitation step, plutonium in filtrate solutions from purification steps is precipitated with potassium, magnesium, or sodium hydroxide. Heavy metals are concentrated in the plutonium-rich hydroxide cakes and derive from one or more of the following: (a) feed materials that consist of or contain these metals; (b) leaching of chromium from stainless-steel equipment components; or (c) the use of silver salt (until 1994) as an indicator of chloride content. The resulting Pu-enriched hydroxide cakes become feed material for nitrate operations, and liquid meeting the TA-50 WAC is sent to the RLWTF using the caustic waste line. Some hydroxide cakes are returned to the dissolution step for re-processing.

3.5.4 Nitrate Operations

P/S codes AL, AO, AP, AS, AT, ATL, BAC, BF, BL, BM, BU, CC, CD, CF, CH, COD, COL, CPOD, CR, DF, DP, DS, ED, ETD, EV, FA, FC, FX, GMS, HC, HCD, HD, HGMS, HP, HRA, IA, IS, LC, LG1, LG2, LR, MAG, MAS, MB, MELL, MF, ML, MPD, NC, NL, NR, OD, OH, OY, PA, PAF, PR, PS, PT, PTS, RB, RBJ, RC, RCM, RFX, RO, RR, SC, SP, SSD, SX, TDC, UPS, US, US2, VC, VP1, VP2, VP3, VUL, ZD

A detailed description of nitrate operations can be found in *Process Acceptable Knowledge Summary Report for Nitrate Operations at TA-55* (TWCP-AK-2.1-005).

The overall goal of the nitrate operations is to recover plutonium from scrap and residues, and produce a purified plutonium oxide for conversion into metal. The primary feed sources for the nitrate operations are plutonium residues from other recovery operations (e.g., chloride operations), metal preparation, metal fabrication, analytical laboratory operations, and residues from other DOE facilities. Nitrate operations can be broken down into the following process steps:

- Pretreatment
- Dissolution
- Purification
- Evaporation
- Cement fixation

Pretreatment primarily includes physical processes used to separate scrap and residues for the next step—dissolution. It may include calcination, caustic leaching, chemical separation (hydroxide or oxalate precipitation), crushing and pulverizing, distillation, filtering of liquids or oils, incineration, magnetic separation, passivation, scraping, or sorting. After pretreatment, solids are sent to dissolution if plutonium concentrations are above the DL and to solid waste packaging (at the present time) or to cement fixation (in the past) if concentrations are below the DL. Liquids are sent to purification if plutonium concentrations are above the DL and to the TA-50 Radioactive Liquid Waste Treatment Facility (RLWTF) if they meet the TA-50 RLWTF WAC or to evaporation and cement fixation; otherwise, they are further treated until they meet that WAC.

Dissolution includes various steps that generate plutonium nitrate solutions for feed to purification. Primary chemicals used in dissolution are nitric acid, calcium fluoride, and/or hydrofluoric acid. Filtered solids are returned to the dissolution process until plutonium concentrations are below the DL, then sent to cement fixation for disposal. Debris items are disposed after removal of plutonium contamination above the DL. Plutonium-bearing solutions are sent to purification.

Purification consists of ion exchange and precipitation processes. The ion exchange processes use resin-filled columns to collect plutonium, which binds to the resin while impurities flow through the columns; an eluting agent is then used to release purified plutonium in solution. The enriched solutions are then sent to oxalate precipitation. Calcination of the oxalate converts the plutonium to oxide form. The depleted liquids are sent to the evaporator or the RLWTF, and the calcined plutonium oxides are sent to the vault.

The evaporator processes plutonium-poor liquids in order to re-concentrate plutonium, if possible, or to reduce the volume of liquid waste. Evaporator bottoms are either sent back to ion exchange or discarded to cement fixation, depending on their plutonium content. Heavy metals that may be present are concentrated in this process.

In the cement fixation step, wastes with low plutonium concentrations are collected and immobilized in cement. Most of the wastes generated under these processes (P/S codes CF, HP, and IA) are classified as

cemented wastes and would not normally be part of the debris waste streams.

3.5.5 Miscellaneous Operations

P/S codes AC, AC1, AC2, AC3, ACL, AD, APD, AX, CK, CV, EDC, EOC, EXT, FDL, FLU, HRS, IB, ICP, IE, LI, LIBS, ME, NCD, RASS/RSS, RD, SA, SMP, SO, STF, VS, WM, X0, XES, XO, XP

A detailed description of miscellaneous operations can be found in *Process Acceptable Knowledge Summary Report for Miscellaneous Operations at TA-55* (TWCP-AK-2.1-004).

R&D projects at TA-55 include an array of activities involving applied techniques and methods designed to study and improve processes associated with the purification, separation, extraction, recovery, and characterization of actinides (primarily plutonium) from various matrices. General types of miscellaneous processes are described below.

Extraction/Separation Studies. A series of similar actinide extraction, separation, and characterization R&D studies involved processing of actinide hydroxide cakes from chloride and nitrate operations, development of sensors and instrumentation for online chemical analysis, and purification process development. The process R&D activities were of a non-routine developmental nature involving research, process development, small scale "trouble-shooting," and occasionally preparation of various isotopes and isotopic mixtures of plutonium, uranium, americium, and neptunium.

Halogenation Studies. A variety of R&D efforts used fluorinating agents to fluorinate samples containing plutonium residues. A gas flow loop was used to pass a fluorinating agent through a gas-solid reactor where plutonium in the solid residue reacted chemically to form solid PuF_4 or gaseous PuF_6. Gaseous PuF_6 was trapped in a cold trap, distilled, and reduced to PuF_4. Separation operations involving experimental chlorination processes were similar to the fluorination procedures. A gas loop was used to flow carbon tetrachloride and perchlorocarbons through a gas-solid reactor to chlorinate plutonium oxides to form recoverable plutonium compounds.

Non-Aqueous Dissolution/Extraction Operations. Non-aqueous dissolution/extraction operations included the dissolution of actinide compounds and actinide-containing matrices in superacid media. The superacid solutions were evaporated to leave solid products that were analyzed by a variety of methods. The study of the organometallic chemistry of uranium and thorium in non-aqueous solvents consisted of

a variety of small-scale organoactinide operations involving fundamental research of the synthesis in non-aqueous media of new actinide compounds, their characterization and reaction chemistry, and application to existing actinide processing technology. Other operations comprised a broad range of laboratory activities in support of fundamental and applied actinide chemistry research, including preparation of solvents and reagents, synthesis of new chemical compounds, and characterization and analysis of new chemical compounds using wet chemistry methods and analytical instrumentation.

Analytical Operations. This category covers all analytical techniques performed in Room 124 of the Plutonium Facility. Processes involve analysis of plutonium and americium, RCRA metals, and trace metals. Originators provide samples, which are prepared for further analyses, such as inductively-coupled plasma (ICP) and X-ray energy spectroscopy (XES). Unused liquid samples are returned to the originator, sent to radiochemistry for counting, or sent to recovery operations.

R&D Efforts. Several small-scale R&D efforts primarily focused on plutonium recovery included the following activities:

- Fluoride sintering of PuO_2 took advantage of the presence of fluoride to aid the formation of a sintered mass of PuO_2 powder at temperatures above 700 °C.
- Chlorination of Pu oxides involved oxides with tantalum chips from Rocky Flats Environmental Technology Site (RFETS). Chlorination was used to recover plutonium from potassium chloride and sodium chloride matrices.
- Processing of molten-salt extraction (MSE) salts generated at LANL and RFETS.
- Recovery of plutonium from ash involving plutonium/thorium oxide mixtures.
- Processing of neptunium oxide and metal was performed to remove the protactinium daughter in order to use the neptunium for NDA standards.

Measurement/Detection Operations and Studies. P/S code VS involves the inspection of oxides and metals. Materials are retrieved from the vault, brought to the glovebox, inspected and sampled if necessary, then repackaged and returned to the vault. Assay methods include XES, laser based spectroscopy, and other spectroscopic techniques. Electron

microscopy may be conducted on actinide samples in the future. In addition to elemental and isotopic analyses, other measurement studies are designed to calculate the surface area and pore size distribution of a sample and to analyze its surface characteristics.

Pyrochemical Matrix Studies. A pyrochemical matrix study was conducted from 1986-1992 and involved rod milling prior to screening. This process had two objectives: (1) blending of large batches of homogeneous plutonium metal oxides for pyrochemical operations, and (2) dissolution of plutonium metal oxides for nitrate operations. The process changed in August 1992 when a need developed to blend oxides to provide feed material for making NDA standards. In February 1995 the process again changed, with the objective of determining the effect of pyrochemical salt matrices on the accuracy of NDA measurements. Process activities involved crushing, pulverizing, blending, roasting, and sieving pyrochemical salts. The results were used to determine handling and processing of the salts and to correct bias measurements. The feed material consisted of high-purity oxides to use in the fabrication of standards for use at LANL and throughout the DOE complex.

Hydrothermal Processing. The hydrothermal processing procedure involves the reaction of aqueous/organic mixtures, pure organic liquids, or contaminated combustible solids (e.g., ion exchange resins, plastic filters, and cellulose rags) under supercritical conditions (i.e., high temperature and pressure). Feed streams include, but are not limited to, carbon tetrachloride, tributyl phosphate, and organic solvents. Process effluents are gases, liquids, and salts. Organic components are oxidized to carbon dioxide. Nitrate contaminants are converted to nitrogen gas and some nitrous oxide. Components such as chlorine, sulfur, and phosphorus are oxidized and converted to acids or salts. Gases are liberated; solids and liquids are collected for recovery or disposal.

Electrochemistry Experiments. Electrochemistry methodologies were designed to decontaminate items, replace processes that produce large amounts of waste, or enhance chemical reactions. The process involved uranium decontamination of disassembled weapon components from various sites with various levels of plutonium surface contamination. The operation was strictly an aqueous process in which an alkaline solution was reacted with the components to precipitate uranium. Significant amounts of metal could be stripped in a short period. The solution containing the precipitated uranium salts was then dried for mass balance.

Metallography. The purpose of the metallography operation is to characterize the microstructure of metallic or ceramic pieces to verify and establish the quality and effectiveness of welds. Materials examined

consist of plutonium and uranium carbides, nitrides, and oxides, as well as zirconium and tantalum alloys, and stainless steel. Metal pieces (pellets) are cut with a diamond saw. Ceramic pieces are subjected to grinding with standard metal grinding media (e.g., papers impregnated with silicon carbides and diamond). The materials are polished with several different chemical compounds.

Waste Management Operations. P/S code RD was used in Room 432 from 1984–1986. It allowed for tracking of demonstration drums (one drum each year) that were packaged and prepared in accordance with the TA-55 Attachments to the Certification Plan (TWCP-701) to meet the WIPP requirements at that time. Packaging of these drums did not of itself result in the generation of TRU waste. The waste drums that were packaged contained non-mixed TRU waste.

Operations under P/S code NCD occurred from April 1989 – April 1991 in Room 432. This P/S code was established to provide a mechanism for dealing with TRU drums that did not confirm specifications (e.g., recorded weight or nuclear material content). Non-confirming drums were temporarily set aside until such time as personnel could reprocess them under P/S code WM to correct the nonconfirming condition. After April 1991, nonconfirming drums were dealt with immediately, and P/S code NCD was no longer needed.

P/S code WM is currently limited to waste that arises from the TRU solid waste management operation in Room 432. This situation has been the case since the beginning of 1993. Room trash boxes from Building PF-4 have always been handled as low-level waste; however, the boxes were assayed to verify contamination levels and any that were determined to be TRU waste were diverted to Room 432 for repackaging as such. From May 1987 through 1992, these boxes were created as P/S code XO or X0. These codes were changed to P/S code WM after 1992. Additional controls were placed on room trash after 1992. Trash was assayed with the Multiple Energy Gamma Assay System (MEGAS). When a container was rejected because of MEGAS data, the rejected container was returned to the originator for removal of any "hot" item(s). This process also allowed greater control to prevent discarding regulated materials (e.g., RCRA constituents) in room trash.

P/S code X0 was designated for waste materials that could not be associated with a specific room, such as a hallway, mezzanine offices, rest rooms, change rooms, basement, pump rooms, and trolleys. The waste from all these areas, except the pump rooms and trolleys, would be low-level waste and no RCRA constituents would be associated with the waste items.

P/S code XO indicated waste materials that were generated within specific rooms but could not be associated with an individual P/S code in that room.

3.5.6 Special Processing

P/S codes ACC, ACD, DO, IAM, IX, PI, POSM, PPD, PX, RM, SB, SBB, SL, and VU

A detailed description of special processing is found in *Process Acceptable Knowledge Summary Report for Special Processing at TA-55* (TWCP-AK-2.1-007).

Special Processing includes processing operations for Material Type (MT) 42, and R&D activities for MT 52. (See Section 3.6.2 and Table 2 for descriptions of plutonium material types.) Because processing MT 42 is a smaller-scale version of the recovery processes used for MT 52, MT 42 processing has five main recovery steps:

- Head-end operations
- Nitrate ion exchange operations
- Chloride ion exchange operations
- Separation and purification by precipitation
- Pyrochemical processes

Only head-end operations and separation by purification and precipitation are covered here, since chloride ion exchange operations, nitrate ion exchange operations, and pyrochemical processes are covered briefly in Sections 3.5.3, 3.5.4, and 3.5.8, respectively.

Head-end operations leach tools, labware, crucibles, rags, etc., in nitric acid to remove recoverable plutonium. Plutonium oxide is typically calcined as part of head-end operations.

Separation and purification by precipitation is a method of plutonium removal from aqueous solutions. The most common precipitation methods utilize oxalate, hydroxide, and peroxide anions. By selectively precipitating the plutonium, many of the metals remain in solution, thereby purifying the plutonium.

All wastes generated by MT 52 R&D operations are replicated for MT 42 but carry different P/S codes to differentiate and identify the radionuclide content of the waste. Outputs from Special Processing include high purity metal for casting and machining.

3.5.7 Metal Operation Processes

P/S codes AO, ARI, BA, BC, BT, CA, CN, CO, CT, DA, DOP, DT, EL, ELW, EM, EVAC, FF, FSPF, GI, HG, ID, IN, ITF, ITF4, ITF7, JA, KBTF, MA, MBC, MOX, MW, OB, OM, PCH, PD, PE, PF, PH, PIG, RAP, RAP2, RL, RS, SRL, TIGR, UA, VD, WE, WLT

A detailed description of metal operation processes is found in *Process Acceptable Knowledge Summary Report for Metal Operation Processes at TA-55* (TWCP-AK-2.1-003).

The processes included in metal operations can be divided into three groups

- on-going metal operations
- developmental metal operations
- reactor fuel development

The main goal of metal processes is to take the high purity metal produced by pyrochemical operations and produce shaped metal pieces. On-going metal operation processes include various R&D activities, alloy development, casting of metals, welding, coating, and machining/metalwork on various metals. Developmental metal operations include the Advanced Recovery and Integrated Extraction System (ARIES) project, assembly operations, burst testing of shells, experimental laser welding, furnace operations, and various other experimental activities. In reactor fuel development, enriched uranium oxide, depleted uranium oxide, and/or plutonium oxide feeds are blended and mixed with graphite, and various operations are performed to convert the feed material into pellets that can be used for fuel. Testing and R&D are done on the fuel pellets.

3.5.8 Pyrochemical Processes

P/S codes CRD, ER, MO, MP, Neptunium, OR, PK, PTP, RA, SCB, SD, SS, and SSMD

A detailed description of pyrochemical processes is found in *Process Acceptable Knowledge Summary Report for Pyrochemical Processes at TA-55* (TWCP-AK-2.1-006).

Pyrochemical processes include metal preparation, metal purification, and ancillary metal production operations. Pyrochemical process outputs are most often high-purity metal feed materials for metal operations.

3.5.8.1 Metal preparation processes include the following:

Metal Preparation Line. The metal preparation line produces plutonium metal from fluoride salts. Hydrogen fluoride gas reacts with plutonium oxides obtained from calcination of oxalate or peroxide precipitates from the aqueous nitrate or chloride process lines. The plutonium compound is further reacted with various chemicals to produce plutonium metal, which can then be recovered as a small globule, or button, by breaking the crucible.

Direct Oxide Reduction (DOR). In the single pass DOR process, plutonium oxide and calcium metal are reacted in molten calcium chloride ($CaCl_2$), or $CaCl_2$ mixed with calcium fluoride (CaF_2), to produce plutonium metal. The reaction is conducted in a magnesium oxide (MgO) crucible. After cooling, a plutonium metal button is removed by breaking the crucible. A layer of salt above the button contains unreacted oxide and metal shot, which is sometimes recovered by addition of fresh salt plus additional calcium metal.

Multiple-Cycle Direct Oxide Reduction (MCDOR). To minimize the salt waste, the MCDOR process was started, in which the molten salt is regenerated by sparging the $CaCl_2$-CaO mixture with chlorine gas between multiple plutonium metal production runs. After approximately five cycles of metal production, the mixture is cooled and the salt and metal phases are separated.

3.5.8.2 Metal purification processes include the following:

Molten Salt Extraction (MSE). MSE is used to separate americium and the more reactive elements such as rare earth elements, alkali metals, and alkaline earth metals from plutonium metal (TWCP-352). This process is employed only if the americium content is greater than 1000 ppm. In the original process, which operated from 1979 to 1988, magnesium chloride ($MgCl_2$) was added to the impure plutonium metal in a molten salt of sodium chloride (NaCl) and potassium chloride (KCl), contained in a MgO crucible, and heated to 750 °C. The magnesium chloride oxidized americium to $AmCl_3$, although some plutonium was also converted to the chloride salt form. In 1988, the MSE process was converted to use plutonium chloride ($PuCl_3$) produced by in-situ chlorination in a tantalum crucible. Ninety percent

of the americium and ten percent of the plutonium are transferred from the feed metal to the salt. After cooling, the salt and metal are mechanically separated. The salts are transferred to the salt stripping process.

Electrorefining (ER). The ER process takes impure metal from the MSE and MCDOR (DOR) processes and produces high purity plutonium metal. Impure plutonium is cast as an anode, which is then placed in a magnesium oxide crucible with a salt mixture, a metal cathode (typically tungsten), and a seeding reagent that is $MgCl_2$ or $PuCl_3$. After the anode and salt melt, current is applied to the system, and plutonium at the anode is oxidized to plutonium ions, that travel to the cathode and are reduced back to the metal state. Impurities in the original plutonium anode that are less electroactive than plutonium (including cadmium, chromium, lead, and silver) remain in the anode, while impurities more electroactive than plutonium (including barium) remain in the molten salt. After cooling, the crucible is broken and the residues are physically separated from the high purity product metal. Anode heels were sent to pyroredox from 1984 to 1986. Currently, salts are sent to chloride operations or carbonate oxidation/distillation.

From 1987 to 1989, secondary solvent metals such as cadmium, bismuth, lead, and gallium were added to experimental studies of the ER process.

3.5.8.3 Ancillary metal production operations include the following:

Salt Stripping. The MSE and ER salts are further treated by salt stripping, oxygen sparging or carbonate oxidation, and salt distillation. The salt stripping process treats the residue by melting and stirring the salt with calcium metal in a magnesium oxide crucible at 850°C. This treatment reduces the plutonium in the salt to metal and allows the metal to coalesce for physical removal and recovery. After cooling, the crucible is broken and the metal physically separated and recycled to the ER process or burned to oxide and sent back through aqueous recovery. The crucible shards are leached in hydrochloric acid, then discarded.

Oxygen sparging and carbonate oxidation (since 1996) are used to ensure that any plutonium, americium, or metallic sodium or potassium left in the salts are converted to nonpyrophoric oxide forms.

Vanadium pentoxide (V_2O_5) was used in place of carbonate to convert metals to oxide as part of the salt stripping process from February to June 1998. Wastes that potentially contain this chemical (HWN P120) are segregrated into waste stream lot TA-55-19A (see Section 4.0).

Salt Distillation. Salt distillation allows the recovery of plutonium oxide from the chloride salt and produces purified chloride salt for reuse.

Pyroredox. The pyroredox operation was used to recover plutonium from spent anode heels in the mid- to late 1980s. The anode heel was polished with calcium metal to remove surface oxide, then oxidized to plutonium (III) with zinc chloride ($ZnCl_2$) in molten KCl, forming plutonium chloride ($PuCl_3$). Elements more electroactive than zinc (including barium) were oxidized into the salt phase, and the zinc formed a metal button. The salt was then mixed with calcium metal in $CaCl_2$ to reduce the plutonium to the metal phase, as well as reducing all elements less electroactive than calcium. The salt phase containing small amounts of the impurity barium was mechanically separated from the metal phase and discarded. The metal phase containing zinc was placed in the vault or further treated, and the plutonium eventually was routed back to ER.

Ingot Casting. Metal is melted in a MgO crucible to cast the ingot.

Metal Coalescence. Metal coalescence is used for plutonium turnings to coalesce the turnings into a metal button. Calcium metal and $CaCl_2$ are added to a MgO crucible along with the turnings and melted.

Metal Oxidation. Small pieces of metal remaining on furnace or crucible surfaces are collected for conversion to the oxide phase. These metal pieces are placed in a furnace for the conversion process. The oxide is then transferred to the vault.

Neptunium. Neptunium residues stored in the vault were processed in 1993.

Pickling. Pickling (i.e., leaching metal with a strong acid) is typically a head-end operation. After a few furnace runs, plutonium metal begins to accumulate on tools and furnace parts so it becomes necessary to leach the plutonium from

these items. In addition, after calcium metal reduction processes such as metal preparation, direct oxide reduction, and molten salt extraction, plutonium metal will have an adherent skin of calcium metal. Hydrochloric acid is used to dissolve Pu from tantalum furnace parts, and nitric acid is used to pickle Pu from other metals.

Plutonium Trichloride Preparation. An intermediate process in Pu metal production prepared plutonium trichloride by bubbling a carrier gas (chlorine) through carbon tetrachloride and passing the mixed gas stream through a bed of plutonium oxide at 500 °C–600 °C before being absorbed in a 5–6 M (molar) potassium hydroxide solution. The carbon tetrachloride was broken down into phosgene, carbon monoxide, and carbon dioxide gases in this process, which was active between January 1987 and June 1989, at which time the process switched to the use of phosgene gas until the process ended in May 1991. Feed material was high purity oxides from the vault or from other P/S codes. The product plutonium trichloride was reduced to metal by the MSE or ER processes.

3.6 Material Inputs to the Waste Generation Processes

Material inputs to the waste generation processes derive from four general sources: (a) feed materials, (b) associated nuclear material types, (c) chemical use, and (d) ancillary material inputs such as those related to the use of laboratory equipment and materials and glovebox maintenance activities.

3.6.1 Feed Materials Identification

The feed materials for TA-55 processes that generate waste in waste streams TA-55-19 and TA-55-20 consist of the general types of materials listed in Table 1. These feed materials are obtained either from the storage vault, as process outputs from various P/S codes, or from sources outside TA-55, including other DOE facilities.

These feed materials fall into four general categories:

- pure Pu metal to be recycled from pits and sealed sources or to be reworked into desired shapes or chemical forms
- intermediate Pu products in purification processes, in the form of solutions, oxides, hydroxides, salts, anode heels, etc.
- a wide variety of matrices contaminated with Pu above the DL, such as ash, salts, equipment, and solutions
- experimental R&D feed materials

Table 1. Feed Materials for Processes Contributing to Waste Streams TA-55-19 and TA-55-20

Feed Material	Potential Presence of RCRA-Regulated Substances*	P/S Codes, Listed by Process
Analytical laboratory solutions	Potentially contaminated with RCRA-regulated constituents • All analytical laboratory solutions are potentially contaminated with chromium (D007), lead (D008), and mercury (D009) • CLS-1 solutions potentially contaminated with mercury (D009) and lead (D008), as well as RCRA-listed organic substances used as solvents, including acetone (F003), butyl alcohol (F003), carbon tetrachloride (D019), chlorobenzene (F002, D021), chloroform (D022), methanol (F003), methylene chloride (F002), tetrachloroethylene (F002, D039), xylene (F003) (Cl-25/TWCP-3547).	Chloride operations: CLS, CW, (analytical laboratory solutions from LANL Group CLS-1); CSE, CXL, SE (other solutions) Miscellaneous operations: ACL, ICP Nitrate operations: CF, HP
Anode heels	Typically contaminated with RCRA-regulated heavy metals cadmium (D006), chromium (D007), lead (D008), and silver (D011). Heavy metals arsenic (D004), mercury (D009), and selenium (D010) are not present because they are volatilized from the Pu oxide feed at the high temperatures to which this material is subjected in P/S codes ER, RM, and SS (electrorefining step).	Nitrate operations: AS, BF, BU Pyrochemical processes: RA
Ash from P/S codes ETD, IS, SB, TDC, or from other DOE facilities	Usually suspect contaminated with barium (D005), cadmium (D006), chromium (D007), lead (D008), and silver (D011). Arsenic (D004), mercury (D009), and selenium (D010) metals are volatilized at high temperatures if present in the oxide and chloride forms.	Miscellaneous operations: CK, CV, FDL, FLU, SO, XP Nitrate operations: AL, AT, ATL, ED, HGMS, HRA, IS, MPD, PTS, RC, SC Special processing: ACD, IAM, SB, SL
Crucible pieces (tantalum, magnesium oxide)	Typically fairly pure, no RCRA substances present	Chloride operations: CL Nitrate operations: MAS, SC Special processing: ACD, SL
Disassembled weapons components (pit diassembly)	High-purity Pu and U material types, no RCRA substances present	Metal operation processes: ARI, CA, PH, SRL Miscellaneous operations: EDC Nitrate operations: BM, RB, RBJ

Feed Material	Potential Presence of RCRA-Regulated Substances*	P/S Codes, Listed by Process
Experimental R&D feed materials; various isotopes and isotopic mixtures of actinides in various matrices	Variable purity; may or may not contain RCRA substances	Miscellaneous operations: AD, CV, EXT, HRS, RASS, SA, XES, XP Nitrate operations: MAS
Hydroxide cakes (process output from P/S codes CLS, CW, CXL, DO, POSM, PRR)	Typically contaminated with RCRA-regulated heavy metals cadmium (D006), lead (D008), mercury (D009), silver (D011), and possibly chromium (D007)	Miscellaneous operations: AD Nitrate operations: CD, HCD, HD, LG2 Special processing: DO, POSM
Miscellaneous materials contaminated with Pu (e.g. sand, slag, tools, crucibles, metal, glass, plastic, labware, scrap, rags, glovebox sweepings, pump oils, HEPA filters)	May be contaminated with RCRA-regulated heavy metals silver (D011), cadmium (D006), mercury (D009), lead (D008), and possibly chromium (D007)	Miscellaneous operations: APD Nitrate operations: ATL, BAC, CPOD, CR, ED, ETD, GMS, HGMS, IS (combustible material), LG1 (non-combustible material), MAG, MAS, MELL (cellulosic material), ML (metal equipment), NC (non-combustible material), NL (non-combustible material), PA (glovebox sweepings), PAF, RO (organics), SC, SP, TDC (cellulosic material), VC, ZD Pyrochemical processes: PK (hardware, metal, anode chips from other P/S codes) Special processing: ACD, DO, SB, SL
MSE salts	Typically fairly pure, suspect contaminated with barium (D005)	Chloride operations: MB, MS Miscellaneous operations: XP Nitrate operations: MB, PS
Neptunium residues from vault	No RCRA-regulated substances	Pyrochemical processes: Neptunium (only active in 1993)
Pu chlorides and fluorides	Variable purity; may or may not contain RCRA substances	Miscellaneous operations: FDL, SO Pyrochemical processes: ER, SD, SS Special processing: RM
Pu metal or metal alloy from vault or from various P/S codes	High purity, no RCRA-regulated substances, unless noted otherwise	Metal operation processes: AO, ARI, BC, BT, CA, DA, ELW, EVAC, FSPF, ITF, ITF4, JA, KBTF, MA, MBC, MW, PCH (variable purity), PD, PE, PF, PH, RL, SRL, VD, WE, WLT Miscellaneous operations: AC, AC1, AC2, EXT, LIBS, ME, SA, SMP, VS Nitrate operations: ATL, BM, BU, MF, PAF, VP1 Pyrochemical processes: CRD (variable purity), MO, SCB, SS,

Feed Material	Potential Presence of RCRA-Regulated Substances*	P/S Codes, Listed by Process
		SSMD Special processing: ACC (variable purity), PI (variable purity), PPD, POSM, RM, SB
Pu oxalates	Typically fairly pure, no RCRA substances present	Nitrate operations: CC, DF, HC
Pu oxides	Variable purity from P/S codes RB, RBJ and others, and from the vault; suspect contaminated with RCRA-regulated heavy metals cadmium (D006) chromium (D007), and lead (D008) High purity oxides from P/S codes CA, DO, and MA, and from the vault; may or may not contain RCRA substances	Metal operation processes: DOP (high-purity Pu and other radionuclides as oxides) Miscellaneous operations: CK, CV, EOC, EXT, FDL, FLU, IB, IE, LI, LIBS, SO, STF, VS, XP Nitrate operations: ATL, BL, CH, CPOD, DP, ED, FC, HRA, LC, MPD, OD, PT, RB, RBJ, SP, SSD, UPS, US, US2 Pyrochemical processes: MP (generally high purity), OR (variable purity), PTP Special processing: DO, PI, PX, POSM, RM
Pu-Be sources	High purity constituents, no RCRA-regulated substances	Chloride operations: PB, PUB
Pyrochemical salts	Typically fairly pure, no RCRA substances other than barium (D005) are present	Chloride operations: MB, MS, PRR Miscellaneous operations: EXT, IB Nitrate operations: COD, COL, MB Special processing: DO
Reactor fuel pellets	High purity Pu and U material types, no RCRA-regulated substances	Metal operation processes: ME
Stainless steel and/or tantalum residues from decladding of Pu-Be sources	High purity metals, potential leaching of chromium (D007) from stainless steel if subjected to strong acid	Chloride operations: PUB

* The information in this column is highly generalized. Applicability of specific HWNs to a process as a result of the feed material must be determined on a case-by-case basis because the presence and fate of contaminants is time and function dependent. These aspects are discussed in the process AK reports.

3.6.2 Radionuclide Content Identification

The primary Pu material type inputs for TA-55 processes are listed in Table 2. The designation *material type* (e.g., MT 52) is used within the DOE Complex to describe the isotopic composition of common blends of radioactive materials used within the Complex. The material type notation was developed because it is a convenient way to describe material types that have very consistent isotopic compositions. Table 2 indicates the isotopic composition of the material types at the time the waste was characterized.

The material type provides the basis for estimating an upper bound for U-234, U-235, and Am-241 contents based on the rate of decay of their precursors, Pu-238, Pu-239 and Pu-241, respectively. The purpose of such bounding calculations is to provide a basis for identifying significant enrichment or depletion of one radionuclide versus another, based on radioassays of individual waste containers (see Section 14). The results of these calculations are tabulated in the last three columns of Table 2. The calculations assume that (a) none of these isotopes were initially present in the material, (b) the oldest Pu material in inventory dates back to 1 January 1960, and (c) the waste was packaged on 1 January 1996, making it 36 years old at that time (TWCP-698).

TA-55 processes are not expected to alter the Pu isotopic ratios of the feed material. The material type used in the process generating each waste item was documented on the WODF and DWLS (examples shown in Attachment 4). However, other radionuclides will be present in most of the process wastes from decay of a Pu precursor or as a contaminant in the feed material:

- Np-237, the decay product of Am-241 (half-life, 458 yr), is expected to be present in minor amounts in most debris waste from processes at TA-55.
- In general, uranium and its isotopes are expected to be present only at trace levels, if at all, if the feed material did not purposely contain uranium. The primary uranium material type inputs for reactor fuel development activities and for pit disassembly at TA-55 are listed in Table 3.
- U-235 ingrowth from the decay of Pu-239 (half-life, 24,120 years) would be negligible due to the long half-life of Pu-239.

Table 2. Average Isotopic Content of Plutonium Material Types and Enrichments

Material Type (MT)	Plutonium Isotope (Wt. %) and Half-Life						Upper Bounds for Dimensionless Weight Ratios[a]		
	Pu-238 (87.74 yr)	Pu-239 (24120 yr)	Pu-240 (6564 yr)	Pu-241 (14.35 yr)	Pu-242 (376,300 yr)	Pu-244 (8.26 x 10^7 yr)	U-234/ Total Pu	U-235/ Total Pu	Am-241/ Total Pu
MT 51	0.006	96.77	3.13	0.076	0.018	—	1×10^{-5}	0.001	0.0006
MT 52	0.01	93.78	6	0.2	0.02	—	2×10^{-5}	0.001	0.002
MT 53	0.03	91.08	8.45	0.366	0.071	—	7×10^{-5}	0.0009	0.003
MT 54	0.046	87.42	11.5	0.81	0.22	—	0.0001	0.0009	0.007
MT 55	0.06	83.88	14.73	1.03	0.304	—	0.0002	0.0009	0.009
MT 56	0.061	81.9	16.51	1.18	0.355	—	0.0002	0.0009	0.01
MT 57	0.433	74.63	20.7	2.55	1.69	—	0.001	0.0008	0.02
MT 42									
84%	1.02	1.37	10.32	3.13	84.14	0.02	0.003	1×10^{-5}	0.03
90%	0.72	1.26	6.4	1.86	89.77	—	0.002	1×10^{-5}	0.02
95%	0.45	0.56	2.47	0.906	95.58	0.029	0.001	6×10^{-6}	0.008
MT 83									
83%	83.89	13.8	1.9	0.32	0.09	—	0.26	0.0002	0.003
89%	89.26	10.07	0.633	0.021	0.015	—	0.28	0.0001	0.0002

[a] These ratios are calculated under the assumption that no chemical fractionation occurs and, hence, are intended to be used to identify fractionation when it is present by comparing these upper bounds to radioassay data.

Source: TWCP-698

Table 3. Average Isotopic Content of Uranium Material Types and Enrichments (Wt. %)

Material Type	U-234	U-235	U-236	U-238
MT 12	0.0015	0.23	0.008	99.77
MT 35	0.36	37.6	0.14	61.9
MT 36	0.63	62.44	0.18	36.75
MT 38	1.03	93.04	0.41	5.53
MT 39	1.32	97.52	0.17	0.99

Source: TWCP-698

- U-234 would be present in MT 83 (and to a lesser extent in other Pu material types) as a decay product of Pu-238 (half-life, 87.74 years) (Table 2).

- Protactinium (Pa)-231, the decay-chain daughter of U-235, is expected to be present in trace amounts in some TA-55 wastes due to its widespread presence as a contaminant in TA-55 operations (TWCP-5164, TWCP-5165).

- Cs-137 is a product of the spontaneous fission of Pu-238, Pu-239 and especially Pu-240, as well as a trace contaminant in purified plutonium from the production reactors (TWCP-5164, TWCP-5165). In the latter case the remaining Cs could be on the order of 0.5 ng/g Pu. In the former instance the formation of Cs-137 due to spontaneous fission would lead to about 0.4 pg/g Pu in plutonium that is 10 years old. Because Cs-137 due to spontaneous fission is about a factor of a thousand less than that due to residual contamination from the original separation on the production fuel, the latter is the dominant source of Cs in TA-55 waste.

In general no correlation is expected to be seen among the different radioelements, Pu, Np, U, Pa or Am. The differences in valence states and chemical affinities among these elements is expected to result in substantial fractionation during several TA-55 processes, including ion exchange, solvent extraction, hydroxide precipitation, and dissolution.

Secondary radionuclides are also present in the waste due to processing of feed materials other than Pu (TWCP-698). Additional radionuclides expected to be present in each process were reviewed by a panel of experts at TA-55 and compiled in a memorandum according to P/S code (TWCP-882, amended by TWCP-5166), as summarized in Table 4. This list includes Am-241, Am-243, cerium (Ce)-144, curium (Cm)-244, Np-237, Pa-231, Pu-238, Th-230, Th-232, U-233, U-235, and U-238.

The possible presence of Cm-244 in TRU waste is of particular interest to radioassay operations because it can affect the choice of a radioassay instrument to use for optimal results. Cm-244 was introduced in TA-55 operations in P/S code DOP, which started in 1988 (TWCP-5165). Material outputs from this process sometimes were sent to P/S codes IS or WE. Cm-244 could also be part of debris waste under P/S code CA because both operations took place in the 300 Wing of PF-4. Because only one room in this area is available for bagouts, TRU waste from P/S codes DOP and CA were sometimes combined. In addition, because rags

Table 4. Secondary Radionuclides in TA-55 TRU Waste

Secondary Radionuclide	P/S Code Generating Waste
Americium-241	AO, AP, CA, CD, CF, CLX, CXL, DOP, EV, FA, HCD, HD, HP, IA, LR, MA, OH, PI, PR, PRR, PS, SS, SX, WE, XP; plus trace amounts expected in TRU waste generated by nearly all P/S codes, due to ingrowth from Pu-241 decay. Waste could be either depleted or enriched in Am depending upon whether the source of contamination is the process product or the process residues.
Americium-243	BC, CA, DOP, JA, MA, PH, PI, SS, WE
Cerium-144	DOP, WE
Curium-244	DOP, IS (Mar-Apr 1987), WE
Neptunium-237	ATL, BC, CA, CF, DOP, ED, EV, IS, JA, MA, Neptunium, PI, RB, RFX, WE; plus trace amounts expected in TRU waste generated by nearly all P/S codes, due to ingrowth from Am-241 decay
Protactinium-231	BC (1989), JA (1989), WE
Plutonium-238	TDC
Plutonium-241	EV, IS, TDC
Thorium-232	CF, DOP, PT, WE
Thorium-232 enriched with Thorium-230	BC, JA, WE
Uranium-233	DOP, WE
Uranium-235 or enriched uranium	CN, FF, GI, MW, OB, PD, PI, RS, SRL, UA; and P/S codes in nitrate operations (AL, AO, AP, AS, AT, ATL, BAC, BF, BL, BM, BU, CC, CD, CF, CH, COD, COL, CPOD, CR, DF, DP, DS, ED, ETD, EV, FA, FC, FX, GMS, HC, HCD, HD, HGMS, HP, HRA, IA, IS, LC, LG1, LG2, LR, MAG, MAS, MB, MELL, MF, ML, MPD, NC, NL, NR, OD, OH, OY, PA, PAF, PR, PS, PT, PTS, RB, RBJ, RC, RCM, RFX, RO, RR, SC, SP, SSD, SX, TDC, UPS, US, US2, VC, VP1, VP2, VP3, VUL, ZD)
Uranium-238 or depleted uranium	BC, CN, FF, GI, JA, LC, MW, OB, PD, RC, RS, SRL, UA, UPS, US, WE,; and P/S codes in nitrate operations (AL, AO, AP, AS, AT, ATL, BAC, BF, BL, BM, BU, CC, CD, CF, CH, COD, COL, CPOD, CR, DF, DP, DS, ED, ETD, EV, FA, FC, FX, GMS, HC, HCD, HD, HGMS, HP, HRA, IA, IS, LC, LG1, LG2, LR, MAG, MAS, MB, MELL, MF, ML, MPD, NC, NL, NR, OD, OH, OY, PA, PAF, PR, PS, PT, PTS, RB, RBJ, RC, RCM, RFX, RO, RR, SC, SP, SSD, SX, TDC, UPS, US, US2, VC, VP1, VP2, VP3, VUL, ZD)

Sources: TWCP-882, TWCP-5166, TWCP-AK-2.1-003, TWCP-AK-2.1-005

from DOP were sent to IS, Cm-244 could be present in the ash produced by this operation, which is then processed through nitrate aqueous recovery operations. Some unknown fraction of the Cm-244 could ultimately end up in the evaporator bottoms, which are then immobilized in cement in P/S code CF. In any case, however, Cm-244 is not expected to be present in any waste generated before 1988.

During TWCP characterization, the contents of each waste package undergo non-destructive analysis to provide detailed radioisotopic data. These data are used to evaluate the accuracy of AK information in accordance with *Waste Characterization Data Reconciliation with Acceptable Knowledge* (TWCP-DTP-1.2-064). The assay results are summarized in Section 14.2.

3.6.3 Chemical Content Identification

Chemical contents of process inputs and outputs were compiled from chemical lists contained in procedures reviewed during the process AK search and from subject matter expert (SME) input. Individual process AK reports contain detailed assessments of these chemical inputs and of the applicability of EPA HWNs. In this section, discussion of chemical inputs are divided into the following categories:

- Acids and bases
- Gases and cryogenic fluids
- Metals
- Inorganic chemicals
- Organic chemicals

3.6.3.1 *Acids and bases.* Acids used in the TA-55 processes covered in this report are ascorbic acid, formic acid, hydrochloric acid, hydrofluoric acid, nitric acid, oxalic acid, perchloric acid, phosporic acid, stearic acid, sulfuric acid, and superacids (e.g., HSO_3F). Bases used in these processes are calcium hydroxide, magnesium hydroxide, potassium hydroxide, and sodium hydroxide. No EPA HWNs are applicable to the use of these chemicals in the TA-55 processes for the following reasons:

- D001 (oxidizer), D002 (corrosivity), and D003 (reactivity) do not apply to the solid debris waste because there are no free liquids in this waste.

- D001, D002, and D003 also do not apply despite the possible production of perchlorate salts in perchloric acid solutions because:

- Perchloric acid solutions are sent to cement fixation.
- Perchlorate salts used in P/S code FF were sent to cement fixation (TWCP-5158).
- Any perchlorate salts that might be present on rags are removed when the rags are rinsed before being discarded.

- Formic acid and hydrofluoric acid are listed in Appendix VIII of 40 CFR Part 261, for their corrosive and toxic characteristics, with EPA HWNs U123 and U134. However, these HWNs are not applicable to the manner in which these chemicals were used in the processes covered by this report.

- None of the acids or bases are F, K or P-listed chemicals

3.6.3.2 *Gases and cryogenic fluids.* The following gases and cryogenic fluids used in the TA-55 processes are not identified as having hazardous characteristics in 40 CFR Part 261, including Appendix VIII in that regulation:

- Argon
- Carbon dioxide
- Chlorine
- Dioxygen difluoride (foof)
- Halogen fluorides
- Hexafluoroethane
- Hydrogen chloride
- Krypton fluoride
- Methane
- Nitrogen (gas)
- Nitrogen (liquid)
- Perfluoropropane
- Tetrafluoromethane

The following gases used in the TA-55 processes are identified in Appendix VIII of 40 CFR Part 261 as having hazardous characteristics. The chemical name is followed by the listed EPA HWN and the P/S codes in which the gas is used:

- Fluorine (P056) is used in P/S codes CV, FDL, FLU, PI, SO

- Hydrogen fluoride (U134) is used in P/S codes MP, PI

- Nitrogen dioxide (P078) is used in P/S code HRS
- Phosgene gas (P095) is used in P/S code PTP

No EPA HWNs are applicable to the use of these gases in the TA-55 processes. Compressed gas cylinders are kept outside of the gloveboxes; most are even outside the building, and the gases are plumbed into the glovebox (TWCP-4164). Thus, the gas cylinders are not discarded with TRU wastes. Additional reasons the HWNs are not applicable are as follows:

- D002 (corrosivity) does not apply to the use of hydrogen fluoride because there are no free liquids in the solid TRU waste.
- D003 (reactivity) does not apply to phosgene because any excess chemical was passed through a solution of sodium hydroxide or potassium hydroxide, thereby producing a chloride salt solution.
- P056 (fluorine), P078 (nitrogen dioxide) and P095 (phosgene) are not applicable to the listed TA-55 processes because of the manner in which these gases are used in the processes covered by this report.
- Hydrogen fluoride (U134) is listed in Appendix VIII of 40 CFR Part 261 for its corrosive and toxic characteristics. However, this code is not applicable to the manner in which this gas is used in the processes covered by this report.

3.6.3.3 *Metals*. The following metals used in the TA-55 processes are not identified as having hazardous characteristics in 40 CFR Part 261, including Appendix VIII of that regulation: bismuth, bismuth-tin alloy, calcium, copper wool, gallium (metal, oxide or salt), gold, lanthanides, lutetium, niobium +1 percent zirconium metal, platinum, platinum-rhodium alloy, tantalum (metal, alloy, oxide or salt), titanium, uranium powder (depleted), vanadium, and zirconium alloy.

Several metals used in TA-55 processes are identified in 40 CFR Part 261 or in Appendix VIII of that regulation as having hazardous characteristics. The bullets below list the chemical name, its listed EPA HWN, the P/S codes in which

the metal is used, and the applicability of the EPA HWNs for use of these metals in the TA-55 processes:

- Alkaline earth metals (D003) were used in P/S codes AC, AC1 and AC2; it is possible that one or more of these were pyrophoric. However, EPA HWN D003 does not apply to P/S codes AC, AC1, or AC2 because the metals are consumed or oxidized before discarding.

- Arsenic (D004) was used in P/S code PE between 1984 and 1985, and EPA HWN D004 is applicable to P/S code PE during this period.

- Cadmium (D006) applies to a limited number of anode heels produced in P/S codes ER, PX, and SS using cadmium as a solvent.

- Lead (D008) was used in P/S codes DOP, ER, KBTF, PX, and SS. For combustible debris waste, EPA HWN D008 is applicable to P/S codes DOP, KBTF, and PX. For P/S codes ER and SS, D008 is only applicable to the metal waste.

- Tin-lead (D008) solder was used in sensors in P/S code BT, but D008 is only applicable to the metal waste from this P/S code, and not to the combustible debris waste.

- Mercury (D009) applies to P/S code SSMD, in which it was used for about one week in the summer of 1994.

- Nickel powder was used in P/S code CO as a sintering aid. This metal is listed in Appendix VIII but no HWN is given.

- Sodium (D003) was used in P/S code EL. However, D003 does not apply in this case because excess Na is dissolved in Dowanol 80.

- Stainless steel (contains chromium, D007) was used in P/S code WE. However, EPA HWN D007 does not apply in this case. There is no potential to leach chromium because stainless steel is not exposed to strong acids in P/S code WE.

3.6.3.4 *Inorganic chemicals*. The following inorganic chemicals used in the TA-55 processes are not identified as having hazardous

characteristics in 40 CFR Part 261, including Appendix VIII in that regulation: aluminum chloride, aluminum fluoride, aluminum nitrate, aluminum oxide, ammonium chloride, antimony pentafluoride, bromine, calcium carbonate, calcium chloride, calcium fluoride, calcium nitrate, cerium nitrate, cesium chloride, cobalt nitrate, dicesium hexachloroplutonate (DCHP), ferric ammonium sulfate hydrate, ferric nitrate, ferrous ammonium sulfate, ferrous chloride, ferrous sulfamate, graphite, gypsum cement, hydrogen peroxide, hydroxylamine chloride, hydroxylamine hydrochloride, hydroxylamine nitrate, iodine, lanthanum nitrate, lithium chloride, magnesium chloride, magnesium oxide, magnesium perchlorate, molybdenum oxide, phosphates, Portland cement, potassium chloride, potassium fluoride, potassium permanganate, potassium thiocyanate, silicone lubricant, sodium bicarbonate, sodium carbonate, sodium chloride, sodium chlorite, sodium citrate retarder, sodium dithionate, sodium nitrate, sodium nitrite, sodium oxalate, sodium sulfate, sodium tetraborate, stannous chloride, thorium oxide, uranium oxide (depleted), zinc chloride, zinc stearate, and zirconium carbide. Some processes indicated the use of nitrate, chloride, carbonate, bicarbonate, oxalate, and nitrite salts of sodium, potassium, lithium, magnesium, calcium, and iron.

Several inorganic chemicals used in TA-55 processes are identified in 40 CFR Part 261 or in Appendix VIII of that regulation as having hazardous characteristics. Table 5 lists these chemicals, their HWN, P/S codes in which they were used, and the applicability of the HWNs to the use of these chemicals in TA-55 processes.

3.6.3.5 *Organic chemicals.* The following organic chemicals used in the TA-55 processes are not identified as having hazardous characteristics in 40 CFR Part 261, including Appendix VIII in that regulation: 1-propanol, 3-in-1 household oil, alkylating agents (unspecified), bromobenzene, bromocresol purple, carbon tetrafluoride, Citrapeel, DBBP (dibutyl butyl-phosphonate), DBBP (dibutyl butyl-phosphonate)/Isopar (isoparaffinic hydrocarbon solvent), diethyl oxalate, dihexyl

Table 5. Use of RCRA-Regulated Inorganic Chemicals in TA-55 Processes

Inorganic Chemicals and P/S Codes in Which They Were Used	RCRA D-Listings and P-Listings Due to Metals Used in the Processes
Hydrogen peroxide	D001 (ignitability—oxidizer) and D003 (reactivity) do not apply to the use of hydrogen peroxide because there are no free liquids in the TRU solid waste
Lead hydroxide, oxide, or nitrate (P/S code AD)	D008 (lead) applies to P/S code AD.
Magnesium perchlorate (P/S code FF)	D001 (oxidizer) does not apply to the use of this chemical in P/S code FF because it was sent to cement fixation (TWCP-5158).
Mercuric nitrate (P/S codes VP1 and VP3)	D009 (mercury) applies to P/S codes VP1 and VP3. Mercuric nitrate is used as a catalyst in P/S code VP1; the hydroxide cake produced in VP1 is processed in P/S code VP3.
Potassium dichromate (P/S codes AD, CS, CSE, DO, and SE)	D007 (chromium) applies to P/S codes AD, CS, CSE, DO, and SE because of the use of potassium dichromate as a titration endpoint indicator until end of 1993. The solution and precipitates were processed by hydroxide precipitation under the same codes. The chromium was incorporated as a contaminant in the hydroxide cakes.
Silver nitrate and other silver salts (P/S codes AC1, CPOD, CS, CSE, DO, SE)	D011 (silver) applies to P/S codes CW and CX due to the use of silver nitrate for chloride titrations under P/S codes CS, CSE and SE until 1993. The solution and precipitates were processed by hydroxide precipitation under P/S codes CW and CX. Silver was incorporated as a contaminant in the hydroxide cakes. D011 (silver) applies to P/S code CPOD due to the use of silver nitrate as a catalyst from 1990 to 1994. D011 (silver) applies to P/S code AC1 due to the use of silver salts.
Sodium chromate (P/S code PT)	D007 (chromium) applies to P/S code PT due to the use of sodium chromate in the separation of thorium from plutonium and americium.
Uranium nitride, depleted (P/S code FF)	D003 (reactivity) does not apply to the use of uranium nitride in P/S code FF. Although this chemical is pyrophoric, its disposal in an oxidizing environment eliminates this characteristic because it is converted to uranium oxide. Uranium nitride is oxidized in the passivation furnace (P/S code PA) prior to discard.
Vanadium pentoxide (P/S code SD and SS)	P120 (vanadium pentoxide) applies to waste generated under P/S code SD from February to March 1998, and under P/S code SS from May 27, 1998 to June 10, 1998.

n,n-diethylcarbamoylmethyl phosphonate (DHDCMP), di-isopropyl benzene, Dow Corning 2000 Oil, Dowanol 80 (long-chain alcohol), ethanol, ethylene glycol, Fantastic, formamide, Fomblin brand pump oil, GoJo cleaner (kerosene derivative), hexane, hydrazine dihydrochloride, hydrazine hydrochloride, ion exchange resin, isopropanol, kerosene, Metalprep 79 (phosphoric acid-based metal cleaner), MolyKote, n-dodecane, Nuetracleaner #1, Nuetracleaner #2, octylphenyl di-isobutyl carbamoylmethyl phosphine oxide (CMPO), oil (engine), organic liquid emulsifier, Organicstrip, perchlorocarbons (unspecified), phenolphthalein, phosphate buffer solution, phosphine oxide compounds, phthalate buffer solution, polyethylene glycol, polyoxyethylene-20-sorbitan laurate (surfactant), SF-2I (as coolant), silicon adhesive, silicon defoamer, sugar, surfactants, tetraethylamine hydrochloride, tetraethylamine hydroxide, tetraethylammonium hydroxide, Texaco Regal 32 oil (cutting oil), thionyl chloride, tributyl phosphate (TBP), tributyl phosphate (TBP)/Isopar (isoparaffinic hydrocarbon solvent), tributyl phosphate and iodine in kerosene, trioctylphosphine oxide (TOPO), urea, Vactra oil, vacuum grease, vacuum pump oil, WD-40, and Windex.

Several organic chemicals used in TA-55 processes are identified in 40 CFR Part 261 or in Appendix VIII of that regulation as having hazardous characteristics. Table 6 lists these chemicals, their HWNs, P/S codes in which they were used, and the applicability of the HWNs to the use of these chemicals in TA-55 processes.

D001 (ignitability) and D003 (reactivity) do not apply to wastes in waste stream TA-55-19 (including TA-55-19A) despite the use of spent non-halogenated solvents (HWN F003) for the following reasons:

- Solutions containing spent non-halogenated solvents are sent to the RLWTF if they are below the DL for plutonium.

- Solutions containing spent solvents and above the DL for plutonium are further treated by aqueous recovery processes as part of routine chloride and nitrate operations. Aqueous recovery involves dissolving any solid plutonium in hydrochloric or nitric acid, followed by ion exchange to extract the plutonium. The processed

Table 6. Use of RCRA-Regulated Organic Chemicals in TA-55 Processes

Organic Chemical and P/S Codes in Which It Was Used	Comments on Applicability of RCRA Codes
Acetone (P/S codes FF, ME, and MOX)	• F003 applies to P/S code ME because it may have been used in the glovebox for cleaning. • F003 does not apply to P/S code FF or MOX because it was only used outside the glovebox.
Acetonitrile (P/S code AC2)	• U003 does not apply due to the manner in which this chemical is used in P/S code AC2 (Appendix VIII chemical).
Benzene (P/S codes AC, AC1, AC2, and SA)	• D018 (benzene) applies to P/S codes AC, AC1, AC2, and SA • F005 applies to P/S codes AC, AC1, AC2, and SA, in which benzene was used as a solvent
Carbon tetrachloride (P/S codes AD, CV, PTP, and PX)	• D019 (carbon tetrachloride) applies to P/S codes AD, CV, PTP and PX. This chemical was used in PTP between 1/87 and 6/89. • F002 does not apply to P/S codes AD, CV, PTP, or PX because it was not used as a solvent or for degreasing.
Chloroform (P/S codes AC, AC1, AC2, APD, FF, and XO)	• D022 (chloroform) applies to P/S codes AC, AC1, AC2, APD, FF and XO. Concentrations in P/S code FF are expected to be below RCRA threshold because freeze-drying should have removed most, if not all, of the residual chloroform before the microspheres were taken into the glovebox for sintering.
Diethyl ether (P/S code SA)	• F003 applies to P/S code SA because of solvent use.
Freon and Freon TF (P/S codes CA, DA, MA, MW, PD, PF, SCB, SRL, UA, VD, WE and XO)	• F002 applies to P/S codes DA, MA and XO. • F002 does not apply to P/S codes CA, MW, PD, SCB, SRL, UA, VD and WE. Although Freon TF is used as a solvent to clean metal parts, the parts are routinely air-dried to avoid the need for cellulosic wipes. • F002 does not apply to P/S code PF because Freon was used as a coolant for a cutting saw, not as a solvent.
Methanol (P/S codes AD and SO)	• F003 applies to P/S code AD because it may have been used for cleaning inside the glovebox. • F003 does not apply to P/S code SO because it was used in a cold trap outside the glovebox.
Methylene chloride (P/S code AC1)	• F002 applies to P/S code AC1 because this chemical was used as a solvent (MA) and a paint stripper (XO).
Methyl ethyl ketone (P/S codes MA and XO)	• D035 (methyl ethyl ketone) applies to P/S codes MA and XO. • F005 applies to P/S codes MA and XO, in which methyl ethyl ketone was used as a solvent (MA and XO).
Pyridine (P/S codes AC and SA)	• D038 (pyridine) applies to P/S codes AC, AC2 and SA. • F005 applies to P/S codes AC, AC2 and SA, in which pyridine was used as solvent.

Organic Chemical and P/S Codes in Which It Was Used	Comments on Applicability of RCRA Codes
Tap Magic (contains 1,1,1 trichloroethane) (P/S code MA)	• F002 does not apply to P/S code MA because Tap Magic is used as a metal cutting fluid or coolant, not as a solvent. Its use was discontinued in 1992.
Tetrachloroethane (not used)	• No RCRA codes apply to tetrachloroethane, an Appendix VIII chemical. Although it is listed on the chemical inventory for metal operations, it was never used in glovebox operations.
Tetrachloroethylene (P/S codes AD, APD, CSE, CV and SE)	• D039 (tetrachloroethylene) applies to P/S codes AD, APD, CSE and SE in which it was used until 1992. • D039 does not apply to P/S code CV because it was used as a coolant outside the glovebox. • F002 applies to P/S codes AD, APD, CSE and SE. Its use as a solvent in P/S code CSE and SE ended in 1992. • F002 does not apply to P/S code CV because it was only used as a coolant outside the glovebox.
Tetrahydrofuran (P/S codes AC, AC2, and SA)	• U213 is not applicable to the use of this chemical because there is no evidence of a spill or of spill residues entering TA-55 TRU waste streams.
Toluene (P/S codes AC, AC2 and SA)	• F005 applies to P/S codes AC, AC2 and SA because toluene was used as a solvent.
Trichloroethylene (P/S codes CK, EL, FF, MA, ME, and XO)	• D040 (trichloroethylene) applies to P/S codes EL, FF, MA, ME, and XO. • D040 does not apply to P/S code CK because this chemical was used as a coolant outside the glovebox. • F001 applies to P/S code MA, in which trichloroethylene was used as a degreaser during final cleaning of metal parts from 1979 to 1992, resuming again in February 2000. • F002 does not apply to P/S codes EL or FF, in which it was used as a lubricant for a cutting saw, not as a solvent.

solutions are below the DL for plutonium and are either sent to the RLWTF or to the evaporator for volume reduction. Evaporator bottoms are fixed in cement, a waste form for which ignitability is not a concern.

- Rags, if contaminated with spent solvents and above the DL for plutonium, are thermally decomposed, which destroys any organic component.

- Although contaminated rags that are below the DL for plutonium are discarded as combustible debris, headspace gas analyses support the expectation that the solvents are below the limits established by the WIPP WAC (see Section 14.4).

- In addition, 100 percent of the waste containers are subjected to headspace gas analysis. Any container showing values over 500 ppm total flammable volatile organic compounds (VOCs) is prohibited from being shipped to the WIPP. (For comparison, the explosive limit for acetone is 25,000 ppm.)

4.0 DIVISION OF THE WASTE STREAM INTO LOTS

Waste containers in a waste stream are characterized as a campaign, in which the targeted group of waste containers to be characterized are selected based on criteria such as availability of the waste containers, waste loading level, availability of waste generator records, and hazardous waste numbers. TA-55-19A is one subset (i.e., lot) of waste stream TA-55-19. Waste in this lot, which consists of 12 drums, is identical to the rest of the waste stream except for the possibility that the drums may contain vanadium pentoxide (EPA HWN P120), which was used only between 02/01/98 and 06/10/98 in two specific P/S codes. To be conservative, drums were assigned to this lot if they were closed as late as the end of 1998.

5.0 CORRELATIONS BETWEEN WASTE STREAMS

Waste streams TA-55-19 and TA-55-20 have been discussed together in this AK Summary Report. These waste streams are similar in physical form and waste material content. They differ only in that TA-55-19 is assigned EPA HWNs based on P/S code information, whereas TA-55-20 contains non-mixed waste.

Other waste streams resulting from the same plutonium processing activities at TA-55 but differing in physical form and waste matrix code are listed in the Sampling Plan. These include waste streams for more specific types of waste such as metal debris, glass,

graphite, HEPA filters, and cemented waste, as well as less specific waste streams such as combustible/noncombustible debris.

6.0 ASSIGNMENT OF WASTE MATRIX CODES

The waste matrix code S5300 is assigned to the waste streams TA-55-19 and TA-55-20 based on waste generation practices described in the TA-55 Waste Management Procedure, 1996 (TWCP-351), description of past segregation practices (TWCP-701, Section 2.1, page 4 of 43), and TA-55 process AK reports (TWCP-AK-2.1-002; TWCP-AK-2.1-003; TWCP-AK-2.1-004; TWCP-AK-2.1-005; TWCP-AK-2.1-006; and TWCP-AK-2.1-007). A more detailed waste matrix code cannot be assigned to the TA-55-19 and TA-55-20 waste streams because TA-55 waste management personnel did not segregate plastic waste from cellulosic waste.

The following codes also apply to waste streams TA-55-19 and TA-55-20 from the *Waste Isolation Pilot Plant Transuranic Waste Baseline Inventory Report* (CAO-94-1005) (TWBIR), the *TRUPACT II Content Code (TRUCON)* (DOE/WIPP-89-004/Rev.13), the Radioactive Solid Waste Disposal (RSWD), and the Item Description Code (IDC) (Sampling Plan).

- TWBIR LA-M16 (TA-55-19) and LA-T16 (TA-55-20)
- TRUCON LA 116A, LA 116B, LA 116C, LA 116D, LA 116E, LA 116F, LA 116H, LA 116I
- RSWD A14, A15, A16, A17, A18, A60
- IDC 004 (combustible waste)

7.0 ASSIGNMENT OF WASTE MATERIAL PARAMETER CODES

The TA-55 Plutonium Facility generates contaminated combustible debris waste primarily from:

- Plastic materials that result in combustible waste such as Tygon tubing, polyvinyl chloride vials, plastic bags, old bag-out stubs, etc.
- Cellulose-based cleaning aids and personal protective equipment such as rags, paper wipes, laboratory coats, coveralls, booties, etc.
- Rubber and Teflon-based products such as rubber gloves, Teflon tape, gaskets, stoppers, etc. used in the operations

The following waste material parameter codes (WMP) are assigned to waste streams TA-55-19 and TA-55-20 based on this information and knowledge of waste generation practices described in the TA-55 Waste Management Procedures (see Section 3.2):

- Cellulosics
- Plastics (waste materials)
- Rubber
- Steel (packaging materials)
- Plastics (packaging materials)
- Iron-based metals/alloys (less than 5 percent by volume)

These WMP codes have been verified with WIPP-compliant waste characterization data from real-time radiography and visual examination (Section 14).

8.0 ASSIGNMENT OF EPA HAZARDOUS WASTE NUMBERS

NOTE: Although the applicability of several of the EPA HWNs discussed below are time-dependent, the period of HWN applicability should generally be extended to two years following cessation of the use of a given listed chemical, unless AK information is available to restrict the applicability to a shorter time period. This recommendation is based on the observation that a single waste container may stay open for several months, and contain waste items generated over a span of time constituting a year or more (TWCP-5086).

8.1 F, K, and P Listings

No K-listings apply to any of the debris waste generated by the P/S codes covered by this report.

The following P/S codes require HWN assignments due to the presence or use of F-listed chemicals. In many cases, the applicability of the HWN is limited to waste generated during a specific period, as discussed in the appropriate process AK report.

• AC, AC1, AC2, AC3	F002, F005
• AD	F002, F003
• APD	F002, F003
• CF	F002, F003
• CLS	F002, F003
• CSE	F002
• CW	F002, F003
• DA	F002
• HP	F002, F003
• MA	F001, F005
• SA	F002, F003, F005
• SE	F002
• WM	F001, F002, F005 (No F-listings apply after 1993)
• X0, XO	F001, F002, F005

In addition, debris waste generated under P/S codes SD and SS between 02/01/98 and 06/10/98 is assigned EPA HWN P120 (vanadium pentoxide). To be conservative, this HWN is assigned to waste containers with packaging dates extending to the end of December 1998.

Because waste items from any of these P/S codes may be present in any given container of combustible debris waste, waste stream TA-55-19 (including lot TA-55-19A) is conservatively assigned the F-listings of F001, F002, F003, and F005. TA-55-19A is segregated for waste with the P-listing of P120. Waste containers assigned to waste stream TA-55-20 only contain items with known P/S codes that do not carry any EPA HWNs.

The reliability of this AK information can be assessed in part based on a review of headspace gas analyses for containers assigned to waste stream TA-55-19 (Section 14.4).

8.2 Toxicity Listings

TA-55-19 (including TA-55-19A) is conservatively assigned the D-listings of D004, D005, D006, D007, D008, D009, D010, D011, D018, D019, D021, D022, D035, D038, D039, and D040.

TA-55-20 has no D-listings.

No D-listings are applicable to combustible debris waste generated by the following P/S codes: AC3 (inactive), ACC, AO (Assembly Operation), AO (Americium Processing Calcination), ARI, BA, BAC, BC, BL, BM, BT, CA, CC, CH, CN, CO, COD, CR, CRD, CT, DF, DP, DT, ELW, EM, EVAC, FA, FC, FSPF, GI, GMS, HC, HG, HRS, ID, IN, ITF, ITF4, ITF7, JA, LC, LIBS, MAG, MAS, MBC, MF, MO, MOX, MP, MW, NCD, NEPTUNIUM, NR, OB, OM, OR, OY, PA, PAF, PD, PF, PH, PI, PIG, PPD, PR, PS, RA, RAP, RAP2, RB, RBJ, RCM, RD, RFX, RL, RM, RS, SBB, SCB, SMP, SRL, SX, TIGR, UA, UPS, US, US2, VD, VP2, VS, WE,WLT, and ZD.

Based on information in the TA-55 process AK reports, combustible debris waste generated by the following P/S codes are conservatively assigned EPA HWNs due to the potential presence of D-listed constituents. In many cases, the applicability of the HWN is limited to waste generated during a specific period of time, as discussed in the appropriate process AK report. If a D-listed constituent is known to be present in the waste at some level, the D-code is conservatively assigned unless analytical data confirm that its concentration is below the regulatory level.

AC	D007, D009, D011, D018, D022, D038
AC1	D007, D009, D011, D018, D022
AC2	D007, D009, D011, D018, D022, D038

ACD	D005, D006, D007, D008, D011
ACL	D007, D009
AD	D004, D005, D006, D007, D008, D009, D010, D011, D019, D039
AL	D005, D006, D007, D008, D011
AP	D007, D009
APD	D007, D008, D009, D019, D021, D022, D039
AS	D006, D007, D008, D011
AT	D005, D006, D007, D008, D011
ATL	D005, D006, D007, D008, D011
AX	D007, D009
BF	D006, D007, D008, D011
BU	D006, D007, D008, D011
CD	D006, D007, D008, D009, D011
CF	D007, D008, D009, D011, D019, D021, D022, D039
CK	D005, D006, D007, D008, D009, D011
CL	D007, D008, D009
CLRD	D007, D008, D009
CLS	D007, D008, D009, D019, D021, D022, D039
COL	D005
CPOD	D011
CS	D007, D008, D009
CSE	D007, D008, D009, D039
CV	D005, D006, D007, D008, D009, D011, D019
CW	D007, D008, D009, D011, D019, D021, D022, D039
CX	D007, D008, D009, D011
CXL	D007, D008, D009
DO	D007, D011 (no D-listed chemicals used after 1993)
DOP	D008
DS	D006, D007, D008, D009, D011
ED	D005, D006, D007, D008, D011
EDC	D007
EL	D040
EOC	D007, D009
ER	D006, D008
ETD	D005, D006, D007, D008, D011
EV	D006, D007, D008, D009, D011
EXT	D005, D006, D007, D008, D009, D011
FDL	D004, D005, D006, D007, D008, D009, D010, D011
FF	D022, D040
FLU	D004, D005, D006, D007, D008, D009, D010, D011

FX	D006, D007, D008, D009, D011
HCD	D006, D007, D008, D009, D011
HD	D006, D007, D008, D009, D011
HGMS	D006, D007, D008, D009, D011
HP	D007, D008, D009, D011, D019, D021, D022, D039
HRA	D004, D005, D006, D007, D008, D009, D010, D011
IA	D006, D007, D008, D009, D011
IAM	D005, D006, D007, D008, D011
IB	D005, D006, D007, D008, D009, D011
ICP	D007, D009
IE	D005, D006, D007, D008, D009, D011
IS	D005, D006, D007, D008, D011
IX	D006, D007, D008, D009, D011
KBTF	D008
LD	D007, D008, D009
LG1	D006, D008
LG2	D006, D007, D008, D009, D011
LI	D005, D006, D007, D008, D009, D011
LR	D006, D007, D008, D009, D011
MA	D035, D040
MB	D007, D008, D009
ME	D007, D040
MELL	D006, D007, D008, D009, D011
ML	D006, D008
MPD	D005, D006, D007, D008, D011
MS	D007, D008, D009
NC	D006, D008
NL	D006, D008
OD	D006, D007, D008
OH	D006, D007, D008, D009, D011
PB	D007, D008, D009
PCH	D007
PE	D004 (1984–1985)
PK	D006, D007, D008, D011
POSM	D007, D011
PRR	D007, D009
PT	D007
PTP	D019
PTS	D005, D006, D007, D008, D011
PUB	D007, D008, D009
PX	D006, D008, D019

RASS/RSS	D004, D005, D006, D007, D008, D009, D010, D011, D019
RC	D005, D006, D007, D008, D011
RO	D006, D008, D040
RR	D006, D007, D008, D009, D011
SA	D007, D009, D018, D038
SB	D005, D006, D007, D008, D011
SC	D005, D006, D007, D008, D011
SE	D007, D008, D009, D039
SL	D005, D006, D007, D008, D011
SO	D004, D005, D006, D007, D008, D009, D010, D011
SP	D007
SS	D006, D008
SSD	D006, D007, D008
SSMD	D009 (D-listed chemicals only used from 06/94 to 08/94)
STF	D007
TDC	D005, D006, D007, D008, D011
VC	D006, D008
VP1, VP3	D009 (D-listed chemical only used from 09/85 to 10/85)
VU, VUL	D005, D008
WM	D007, D008, D009, D022, D035, D040 (D-listings are not applicable after 1993)
X0, XO	D007, D008, D009, D022, D035, D040 **NOTE:** The same set of HWNs have been assigned to P/S codes WM, X0, and XO in order to be conservative, as discussed in *Acceptable Knowledge Summary Report for Miscellaneous Operations at TA-55* (TWCP-AK-2.1-004,R.2, Section 3.5.10).
XES	D004, D005, D006, D007, D008, D009, D010, D011
XP	D004, D005, D006, D007, D008, D009, D010, D011

9.0 VERIFICATION THAT IGNITABLE, REACTIVE, AND CORROSIVE WASTES WERE EXCLUDED

According to the WIPP WAP, "The prohibition of liquids and containerized gases prevents the shipment of corrosive, ignitable, or reactive wastes." The waste streams covered by this AK report have no listings for corrosivity, reactivity, or ignitability. Administrative controls on waste packaging were in place at various times to ensure the absence of such items from the waste stream.

- Liquids were prohibited from solid waste streams at TA-55 when the facility opened in January 1978. A waste management procedure written to cover operations at the

new facility, *TA-55 Standard Operating Procedure (SOP) 406-GEN-R00*, stated that "Liquids are not permitted in any container of solid waste materials" (TWCP-3943).

- Chemical Waste Disposal Requests (see Attachment 5), introduced in June 1980, included check boxes that the waste generator was required to check if the waste contained corrosive acids or bases, or pyrophoric, flammable, corrosive, explosive, toxic, carcinogenic or highly reactive materials.

- The Certification Plan (TWCP-697) and related Generator Attachments for TA-55 (TWCP-701) were implemented in 1987. Waste generators were required to sign a statement on the WODF (see Attachment 4, pp. 4 and 5) documenting that the waste contained "no free liquids, pyrophorics, explosives, compressed gases, powders or materials other than the indicated matrix." Checkboxes were also present for indicating the presence or absence of corrosive chemicals. Full implementation of this generator statement occurred in May 1987.

- Waste management inspectors perform visual verification of the waste prior to its initial packaging, thus allowing the inspectors to verify the generator's WODF statement (TWCP-701, Sections 3.8.5 to 3.8.6).

- In addition to the above-mentioned prohibitions on explosives in waste, explosives were altogether prohibited from TA-55 until installation of the Impact Test Facility in the early 1990s. In case of a misfire or unconsumed explosives, a procedure is in place at TA-55 to ensure that explosives do not enter the waste stream (TWCP-4720).

- The Waste Profile Request Form (WPRF), which has been in use at LANL since 1991, includes a statement which must be authenticated by the waste generator, that the waste is not ignitable (flash point >200°F), reactive, or corrosive.

- The TA-55 Generator Attachments to the Certification Plan were updated in 1995 (TWCP-700) but the prohibition on liquids in the waste, and the waste management inspection, remained in effect.

Hence, since the inception of operations at TA-55, corrosive wastes have been excluded from TA-55 solid wastes through the prohibition of liquids. Controls on reactive wastes are discussed in Section 3.6.3.

Controls have also been in place to ensure the exclusion of ignitable constituents. D001 does not apply to wastes in these waste streams despite the use of spent non-halogenated solvents (HWN F003) for the following reasons:

- Solutions containing spent non-halogenated solvents are sent to the RLWTF if they are below the DL for plutonium.

- If above the DL, the solutions are sent to aqueous processes as part of chloride or nitrate operations. Aqueous recovery steps include dissolution of any solid plutonium

in hydrochloric or nitric acid, followed by plutonium recovery by ion exchange. The solutions are then below the DL and are either sent to the RLWTF or to the evaporator.

- Rags that are above the DL for plutonium are thermally decomposed, which destroys any organic component.
- Rags that are below the DL for plutonium are discarded as combustible debris, but headspace gas analyses support the contention that the solvents are below the limits established by the WIPP WAC (Section 14.4).
- Finally, 100 percent of the drums are subjected to headspace gas analysis, and drums showing over 500 ppm total flammable VOCs are prohibited from being shipped to the WIPP. (This limit is quite conservative. For comparison, the explosive limit for acetone by itself is 25,000 ppm.)

The absence of these prohibited items is verified through radiography of each waste container and visual examination of selected containers during TWCP characterization activities. Any free liquids are absorbed onto vermiculite and discarded in an appropriate waste stream and containerized gases that are found to be present are removed, or the container is tagged as non-compliant by filing a Prohibited Waste Report in accordance with *Nonconformance Reporting and Tracking* (TWCP-QP-1.1-007).

10.0 VERIFICATION THAT INCOMPATIBLE CHEMICALS WERE PROHIBITED

Controls are in place to ensure chemical compatibility for the waste contents and the TRUPACT-II shipping containers. Section 9.0 summarizes administrative controls in place at TA-55 that prohibit incompatible chemicals in the waste and measures taken to verify their absence. In addition, all waste containers shipped from TA-55 to TA-54 for storage were evaluated for potentially incompatible chemicals in accordance with 49 CFR Subpart C—Segregation and separation chart of hazardous materials; Section 177.848, Segregation of hazardous materials, and were determined to be in compliance with this requirement.

For waste that has been generated after the implementation of the 1987 Certification Plan, Generator Attachments, waste generators signed a statement on the WODF for each waste item specifying that the waste contained "no free liquids, pyrophorics, explosives, compressed gases, powders or materials other than the indicated matrix." Prior to the installation of the Impact Test Facility in the early 1990s, explosives were prohibited from TA-55. In addition, waste management inspectors performed visual inspection of the waste prior to its initial packaging, thus allowing the inspectors to verify the generator's WODF statement.

A chemical compatibility analysis was performed for TRUCON codes 116/216 (combustible waste) which indicated that all chemicals and the waste matrix were compatible at levels greater than trace amounts (*Content Code Assessments for LANL*

TRUCON Codes [DOE/WIPP-89-004]). During the process AK search, additional chemicals were identified that necessitated a new compatibility analysis, which is underway at the present time.

11.0 VERIFICATION THAT THERE ARE NO COMPRESSED GASES, FREE LIQUIDS, NONRADIONUCLIDE PYROPHORICS, SEALED CONTAINERS GREATER THAN FOUR LITERS IN VOLUME, OR >1% RADIONUCLIDE PYROPHORICS

Most gases used at the TA-55 Plutonium Facility are stored outside the building and the gas is plumbed into the glovebox from outside the building (TWCP-4164). Occasionally, a lecture bottle may have been used for a process inside the building, but these bottles were kept outside of the glovebox with the gas plumbed into the glovebox. Consequently, compressed gas cylinders or containers are not expected to be in any of the TRU wastes generated by TA-55 operations.

Spray cans, especially WD-40, were in common use in TA-55 gloveboxes until May 1992 (TWCP-4166). These were routinely discarded as metal debris waste. From 1988 until May 1992, the protocol was to vent or puncture the spray cans inside the glovebox; venting was indicated by inserting a metal wire into the valve. After May 1992, spray cans were no longer used in gloveboxes.

Verification that individual waste drums do not contain compressed gases, free liquids, or sealed containers greater than 4 L in volume is obtained from radiography of each waste container and visual examination of selected containers during TWCP characterization activities. Any free liquids are absorbed and any sealed containers greater than 4 L in volume, or unpunctured or unvented gas containers, are removed, or the container is tagged as non-compliant by filing a Prohibited Waste Report in accordance with *Nonconformance Reporting and Tracking* (TWCP-QP-1.1-007).

The effectiveness of administrative and procedural controls on the prohibition of pyrophorics in TRU waste has been verified through testing. For items of pyrochemical salt waste, the procedures of oxygen sparging and/or carbonate oxidation have been used since May 1987 to ensure that pyrophorics were oxidized. In addition, screening tests on similar pyrochemical salts and residues (which contain higher amounts of plutonium) at the RFETS (TWCP-2501) have shown (1) no autoignition, (2) no spontaneous combustion, and (3) no sparking. Experimental results on the reactivity of direct oxide reduction (DOR) salt with water and the reactivity in air of heated calcium metal nodules from DOR salts indicate the absence of "dangerous when wet materials" and pyrophoricity in these salts (TWCP-3730, TWCP-3731, TWCP-3732).

Chemical Waste Disposal Requests dated as early as June 1980 included boxes that were required to be checked if the waste contained pyrophoric, flammable, corrosive, or explosive materials (see Attachment 5, Chemical Waste Disposal Request).

In addition, for wastes generated after the implementation of the 1987 Certification Plan, Generator Attachments, associated waste packaging procedures, and quality assurance systems, the waste generator has signed a statement on the WODF for each waste item stating that waste contains "no free liquids, pyrophorics, explosives, compressed gases, powders or materials other than the indicated matrix." The TA-55 Attachment to the Certification Plan describes how these restrictions were verified by waste management personnel (TWCP-701, Sections 3.8.5 through 3.8.7).

12.0 VERIFICATION THAT THERE ARE NO POLYCHLORINATED BIPHENYLS (PCBs) IN THE WASTE STREAM

No PCBs were introduced into the nitrate operations, based on documentation in TA-55 procedures reviewed during the AK investigation and summarized in lists of process inputs documented in the TA-55 process AK reports.

- In the cement fixation process (P/S codes CF and HP), oils are sometimes added to drums of cemented waste. There is no indication these oils contain PCBs, and they are added to the 55-gallon drums of cement in small quantities (maximum of 6 liters [TWCP-3568/N-74]). The oils are primarily vacuum pump oils, along with some oils used in heat-treating (cooking or silicone oils) or in grinding (TWCP-3568/N-82). None of these oils are known to contain PCBs.

- All transformers known to contain PCBs have been tracked from initiation of operations of TA-55 in 1978. When any transformer oil is drained, the oil is handled by a subcontractor who is wholly responsible for its disposal; this oil does not enter the LANL disposal operations (TWCP-3568/N-82).

- Ballast in fluorescent light fixtures could contain PCBs, but at TA-55 these light fixtures are outside the gloveboxes and hence would not enter the TRU waste stream.

- Oil-filled capacitors are not known to have been used in TA-55 gloveboxes.

In addition, if the possibility exists for the waste to contain PCBs, RTR operators are required to check for indications of PCB-containing materials or PCB-contaminated materials. If there is reason to suspect that an item may contain PCBs (based on AK, operator training, or previous operator experience), then the operator submits a PWR and places a hold tag on the waste container (Section 6.6.6 and Table 3 in TWCP-DTP-1.2-008).

13.0 DETERMINATION OF THE MAXIMUM NUMBER OF CONFINEMENT LAYERS PERMITTED FOR WASTE PACKAGING

Waste streams TA-55-19 and TA-55-20 are primarily generated from operations performed in gloveboxes. The waste material is placed directly into bag-out bags (also called inner bags) through an opening in the glovebox where the bag is attached, and the bag is then closed and detached from the glovebox. Waste streams TA-55-19 and

TA-55-20 may also be generated from "hot jobs" outside of the glovebox, such as valve changes, or from decontamination of spills or other releases. In these cases, the waste is placed directly into one (or possibly more) inner bag at the work area. The maximum number of confinement layers in any case is six (TWCP-816). This upper limit has been confirmed by RTR and VE data (Section 14).

A minor source of waste streams TA-55-19 and TA-55-20 is room trash that was originally considered low-level waste, which is collected in plastic bags inside cardboard boxes. Occasionally when assayed, these boxes are determined to be TRU waste. These boxes may be sorted to remove the "hot" item, or the whole box may be bagged and sent to the TRU packaging area for placement in drums containing waste streams TA-55-19 or TA-55-20, as appropriate. When this occurs, the P/S code WM is assigned to the waste. Due to the additional layers of plastic that are present when this operation occurs, drums with the P/S code WM are assumed to contain up to two more layers of internal packaging than other drums.

Waste drum packaging procedures for waste streams TA-55-19 and TA-55-20 have been modified several times since the beginning of operations at TA-55. TRUCON Code assignments made by the waste generator are compiled in the Sampling Plan; however, when TRUCON codes are absent, they will be assigned to the waste container in accordance with the default packaging configurations and associated TRUCON codes shown in Table 7 that reflect the packaging protocols in effect during different periods of time at TA-55 (TWCP-816).

AK information has been compared with visual examination data for about 22 containers in waste streams TA-55-19 and TA-55-20, in accordance with *Reconciliation of Visual Examination and Radiography Information* (TWCP-QP-1.1-028). In two cases, the number of layers of packaging observed during visual examination was greater than the number of layers reported by the waste generator, and an incorrect TRUCON code was assigned by the waste generator (Section 14.2). It is possible that the extra plastic layers were breached—in which case they would not be confining layers—but that the VE inspection did not note this fact. However, the conservative conclusion is that these discrepancies indicate that TRUCON code assignments by the waste generator must be viewed with caution. Consequently, the most conservative TRUCON code is assigned to each waste container in waste streams TA-55-19 and TA-55-20, in accordance with the following guidance:

a) The default TRUCON code from Table 7 is assigned if the waste generator has not assigned a TRUCON code.

b) The TRUCON code assigned by the waste generator is used only if it has been positively confirmed by RTR or VE data.

c) If no VE data are available, and if the RTR data are indeterminate, then the default TRUCON code is assigned to the container.

Table 7. Maximum Layers of Confinement to Be Used for TA-55-19 and TA-55-20 Waste Containers in the Absence of More Specific Waste Characterization Data

Time Frame	P/S Code	Layers of Confinement[a]	TRUCON Code
01/78–05/87	All	Maximum of 6 layers: • up to 4 inner bags • up to 2 liner bags • all bag closures by either twist & tie; or twist, tie & tape	LA 116 I
05/87–12/97[b]	All except WM, XO, X0	Maximum of 4 layers: • up to 2 inner bags • 2 liner bags • bag closures by either twist & tie; twist, tie & tape, folded and taped, or folded **NOTE:** Folded and taped bags and folded bags do not constitute layers of confinement	LA 116 A
05/87–present	WM, XO, X0	Maximum of 6 layers: • up to 4 inner bags • 2 liner bags • bag closures by either twist & tie; twist, tie & tape, folded and taped, or folded **NOTE:** Folded and taped bags and folded bags do not constitute layers of confinement	LA 116 I
01/98–present	All except WM, XO, X0	Maximum of 1 layer: • 1 carbon-filter vented inner bag (if initial bag is breached, bag is placed in second bag and first bag is slit open), closed by either twist & tie; or twist, tie & tape • 2 liner bags, folded, no closure	LA 116 E

[a] Layers of confinement for these TRUCON Codes are defined in DOE/WIPP-89-004.

[b] In Rev 1 of this AK report, LA116A was applicable from 5/87 until 1/97. Its applicability was extended to the end of 1997 in Rev 2 (the current revision) because of inconsistencies found during reconciliation of VE data (Section 14.2).

This guidance only applies to retrievably stored waste. It is assumed that newly generated waste packaged under procedures approved by TWCP and CBFO are assigned correct TRUCON codes.

14.0 CONFIRMATION OF AK INFORMATION FOR THE WASTE STREAM

Characterization data acquired by WAP-compliant activities provide a means to confirm AK information. Radiography, radioassay, and headspace gas analysis are conducted on all retrievably stored containers of debris waste, and VE is being conducted on at least 50 containers from waste streams TA-55-19 and TA-55-20. Relevant aspects of the data produced by these activities are summarized in the sections below, focusing on the extent to which the data confirm AK information.

14.1 Radiography Data

Radiography data are examined to confirm AK information about WMC assignments, layers of packaging, absence of prohibited items, and relative volumes or weights of waste matrix parameters for a waste stream. The WMC for waste streams TA-55-19 and TA-55-20 is S5300 (combustible debris). Thus far, 265 containers, or about 6 percent of the 4454 containers in these two waste streams (Sampling Plan, Revision 3), have undergone RTR, with the data contained in WIPP-compliant batch data reports. The following observations are made from an examination of these data, as summarized in Tables 8 and 9:

- confirmation of WMC S5300 for 98.9 percent of the drums examined
- identification of WMC discrepancies for 3 containers (1.1 percent of the drums examined), which must be reassigned to other waste streams
- identification of potentially sealed containers > 4 liters in 13 percent of the drums, for which PWRs were submitted
- confirmation of the absence of any other prohibited item or condition requiring a PWR
- confirmation of 4 or fewer packaging layers for 52 percent of the drums; plastic packaging layers for the remaining 48 percent were indeterminate due to the large number of horsetails present in the drums
- confirmation of the waste stream description
- 97 percent of the drums contain more than 75 wt.% combustible waste
- 86 percent of the drums contain less than 5 wt.% metal waste, and 94 percent contain less than 10 wt.% metal waste.
- On average, the drums contain 92 wt.% combustible debris, 5 wt.% metal debris waste, and 3 wt.% packaging material.

Table 8. RTR Data for Waste Streams TA-55-19 and TA-55-20

Evaluated Waste Characteristic	Number of Drums			
WIPP-compliant RTR data				
• TA-55-19	245	out of	4173	6% of waste stream
• TA-55-20	20	out of	281	7% of waste stream
WMC discrepancies				
• TA-55-19	3	out of	245	1% of drums examined
• TA-55-20	0	out of	20	0% of drums examined
Excluding drums with confirmed WMC discrepancy				
Free liquids (no PWR required; all <1" of container or <1% of drum)	34	out of	262	13 % of drums examined
Sealed containers > 4L (PWR required)	31	out of	262	13 % of drums examined
Pressurized containers	0	out of	262	0 % of drums examined
Unpunctured liner	0	out of	262	0 % of drums examined
Other prohibited items	0	out of	262	0 % of drums examined
Excluding drums with PWRs				
Proportion of combustible waste in drum (wt. %)				
• Less than 25	0	out of	231	0 % of drums examined
• 25 to 50	1	out of	231	< 1 % of drums examined
• 50 to 75	7	out of	231	3 % of drums examined
• More than 75	223	out of	231	97 % of drums examined

Data sources: RTR batch data reports TWCP-4019, 4020, 4021, 4080, 4219, 4399, 4400, 4457, 4458, 4459, 4464, 4471, 4542, 4543, 4544, 4545, 4566, 4570, 4572, 4573, 4574, 4577, 4721, 4797, 4835, 5110, 5121, 5147; RTR batch data report awaiting review and approval by Carlsbad Field Office (CBFO): LA01-RTR-006.

Table 9. RTR Packaging Data for Waste Streams TA-55-19 and TA-55-20

Maximum Number of Layers	Metal Layers	Plastic Layers	Number of Drums		
Less than or equal to 1	0	1	2	out of 231	1% of drums
Less than or equal to 2	0	2	21	out of 231	9% of drums
Less than or equal to 3	0	3	95	out of 231	41% of drums
Less than or equal to 4	1	3	2	out of 231	1% of drums
Less than or equal to 5	None observed		0	out of 231	0% of drums
Less than or equal to 6	None observed		0	out of 231	0% of drums
Number of Layers Indeterminant due to number of plastic horsetails:	0	Indeter	109		
	1	Indeter	2		
	Subtotal		111	out of 231	48% of drums

Data sources: RTR batch data reports TWCP-4019, 4020, 4021, 4080, 4219, 4399, 4400, 4457, 4458, 4459, 4464, 4471, 4542, 4543, 4544, 4545, 4566, 4570, 4572, 4573, 4574, 4577, 4721, 4797, 4835, 5110, 5121, 5147; RTR batch data report awaiting review and approval by CBFO: LA01-RTR-006.

NOTE: TA-55 waste generators followed guidance that metal cans used to contain debris were to be considered as packaging, and not as waste. This may account for the drums of combustible debris that were estimated by RTR to contain more than the expected 5 wt.% metal waste.

Changes in waste stream assignment because of characterization data are documented in accordance with *Waste Characterization Data Reconciliation with Acceptable Knowledge* (TWCP-DTP-1.2-064).

AK information resolved an apparent WMC discrepancy for several drums in waste stream TA-55-19 which contained material identified as metal by the RTR operator, thereby leading to an apparent WMC of S5110 (for metal debris) (TWCP-3288, 3289, 3290, 3291, 4190). After reviewing with the generator how these drums were packaged, the generator determined that these drums were packaged with very dense in-house fabricated plastic material called polyvinyldienefluoride (PVDF, also known as Kynar) used to line gloveboxes and build equipment in chloride operations starting in about 1988 (TWCP-5157, TWCP-5169). Hence, the WMC S5300 was correct. As a result of this AK information, a sample of Kynar was added to one of the test drums used in the RTR operations.

14.2 Visual Examination Data

VE data are used to confirm AK information on waste stream descriptions, WMC, the absence of prohibited items, the number and type of confining layers, and the relative volumes and weights of waste matrix parameters. AK packaging and WMC information have been evaluated by VE for about 22 containers so far in waste streams TA-55-19 and TA-55-20, in accordance with *Reconciliation of Visual Examination and Radiography Information* (TWCP-QP-1.1-028). These 22 drums were packaged between 11/85 and 8/97 (Sampling Plan). P/S codes are available for the waste items packaged in these drums, as documented in radioassay batch data reports (TWCP-4024, TWCP-4025, TWCP-4052, TWCP-4158, TWCP-4303) and waste generator records (TWCP-5086). (The codes for these drums are listed in Table 11, which is discussed in Section 14.3). VE results are summarized in Table 10, from which the following observations are made:

- VE confirmed the AK WMC for all of these drums, reporting WMC S5300 (Organic Debris) for 8 drums, and S5310 (Plastic/Rubber Debris) for 14 drums.

- The maximum number of confining layers observed by VE was five (for one drum), consistent with AK information indicating that the number of layers is six or less (TWCP-816; also Table 7 of this report).

  NOTE: RTR data for the number of plastic layers in this particular drum were indeterminate.

Table 10. VE Data for Waste Streams TA-55-19 and TA-55-20

Characterization Data	Number of Containers				Comments
	AK[a]		RTR	VE	
Waste Matrix Code					
S5000	—		—	—	Positive confirmation of AK WMC by RTR and VE for 22 drums
S5300	22		22	8	
S5310	—		—	14	
Maximum number of layers and associated TRUCON codes	Default[a]	Assigned in SP	b		Number of confining layers • AK and VE match for 3 drums • AK more conservative than VE for 14 drums • AK from waste generator was less conservative than VE for 5 drums
0 LA116G	—	—		—	
1 LA116C, E, F	—	6		2	
2 LA116B, D	—	—		2	
3 None	—	—		9	
4 LA116A	4	4		8	
5 LA116H	—	—		1	
6 LA116I	8	—		—	

SP—Sampling Plan (Rev 3)

Notes:

[a] AK information for WMC and TRUCON code assignments is from the Sampling Plan, Rev 3. If no TRUCON code was assigned, then the default code was determined from Table 6 in TWCP-AK-2.1-008 (Rev. 1), using AK information on packaging dates and P/S codes as documented in the Sampling Plan.

[b] RTR data indicated no metal packaging layers for any of these drums, which was consistent with AK information and confirmed by VE. The number of plastic packaging layers was indeterminate by RTR except for one drum with three layers, which was consistent with the default TRUCON code and confirmed by VE (TWCP-4393).

Data sources: VE batch data reports TWCP-3947, 3948, 3949, 3950, 3951, 4022, 4326, 4327, 4392, 4393, 4394, 4427, 4800, 5077, 5083, 5084, 5085, 5112, 5115, 5120, 5173; VE batch data report in Project-level review: LA00-3.4.1-005.

Table 11. Radioassay Data for Waste Streams TA-55-19 and TA-55-20

Radionuclide Characteristics	Number of Drums	Comments
Pu isotopic fractions		Dominant isotope is Pu239 in all drums
• Pu238 / total Pu	22	0.010 to 0.069 wt %
• Pu239 / total Pu	22	91.1 to 94.1 wt %
• Pu240 / total Pu	22	5.7 to 8.5 wt %
• Pu241 / total Pu	22	0.14 to 0.32 wt %
• Pu242 / total Pu	22	0.009 to 0.055 wt %
Material type		
• MT52	19	
• MT53	2	
• MT52/53 mix	1	
Total Pu mass, expressed as ratio of AK data to NDA data		AK data from Sampling Plan (Rev 3) AK/NDA ratios range from 0.6 to 1.4
• AK/NDA < 0.7	1	
• 0.7 < AK/NDA < 1.3	17	
• AK/NDA > 1.3	4	
Other actinides present at detectable levels (uncertainties ≤ 21.5%)*		*Range of ratios of nuclide to total Pu* Measured ratios / Calculated upper bound (Table 2)
• Am241	22	1×10^{-3} to 9×10^{-3} / 2×10^{-3} to 3×10^{-3}
• Am243	22	4×10^{-7} to 4×10^{-6} / Not applicable
• Np237	22	2×10^{-4} to 1×10^{-2} / Not applicable
• U234	21	7×10^{-3} to 6×10^{-2} / 2×10^{-5} to 2×10^{-5}
• U235	5	3×10^{-3} to 5×10^{-2} / 9×10^{-4} to 1×10^{-3}
• U238	0	No measurable U238 / Not applicable
Other radionuclides present at detectable levels (uncertainties ≤ 21.5%)*		Th232 is not detectable by the methods used
• Cs137		
• Pa231(uncertainty <21.5%)	16	
• No other detectable nuclides	9	
	2	
Ratio of measured ratio (Am241/Total Pu) to calculated upper bound (0.002, Table 2)		
• Ratio < 1	2	Am241 could be from decay of Pu241
• 1 < ratio < 2	7	Process waste probably enriched in Am241
• 2 < ratio < 3	7	Process waste enriched in Am241
• Ratio > 3	6	Process waste enriched in Am241

P/S codes for waste items present in these drums (TWCP-5086). The number of drums containing waste items from each code is given in parentheses, if more than one.

- Chloride operations — CSE, CW, CX (3), CXL (7), MB, MS
- Metal operations — CA (2), FF, MA, MW, PH, SRL
- Miscellaneous operations — AD (2), CV, IB (5), ME, WM (3), XP
- Nitrate operations — ATL, BM (4), COD, DS (3), ED (7), EV (4), HCD, LR (4), MAG, NC (6), NL (2), OD, PR (2), RBJ, RR (2), SC (8), SP (4), SSD
- Pyrochemical operations — ER (3), MO, OR (3), SS (3)
- Special processing — None

NDA—nondestructive assay

Data sources: Radioassay batch data reports TWCP-4009, 4023, 4024, 4025, 4052, 4078, 4158, 4159, 4212, 4225, 4226, 4303; and Sampling Plan (Rev 3). P/S codes from TWCP-5086 and TWCP-5163.

*The rationale for this MDL cut off (21.5% uncertainty) is given in TWCP-2130.

- No closed liners were found by VE, which confirmed AK and RTR information.

- For 5 drums, the number of confinement layers observed during VE (2 to 4) was greater than the number of layers associated with the TRUCON code assigned for these drums by the waste generator (LA116C, 1 layer).

- For 4 of the above drums, the default AK value (LA116E, 1 layer) would also have been less conservative than the VE findings. All 4 had been packaged after January 1997 such that no more than 1 layer was expected (Table 7).

NOTE: As a result of this discrepancy in packaging layers, Table 7 was revised to extend the period of applicability of LA116A (4 layers of packaging) to the end of 1997.

A conservative conclusion is that these discrepancies indicate that TRUCON code assignments by the waste generator must be viewed with caution, at least with respect to waste containers packaged in 1997 when TA-55 personnel were transitioning from one packaging procedure to another.

14.3 Radioassay Data

Radioassay data are examined to confirm AK information on plutonium material type and mass, the presence of other radionuclides contributing to the total drum activity, and evidence for fractionation of other actinides (e.g., uranium, americium) relative to plutonium during material processing. Table 11 summarizes information relevant to these evaluations for the 22 drums from TA-55-19 and TA-55-20 that have undergone VE. These data confirm the following AK information:

- The dominant isotope in all drums is Pu239

- The material type is MT52 or MT53 for all drums

- All these drums qualify as TRU waste

- AK information on total mass of plutonium in each drum is within 30 percent of the TWCP assay value for 17 drums (77 percent). AK mass for the remaining five drums (23 percent) is within 40 percent of the TWCP assay value.

- As indicated by AK information, all drums contain low but detectable quantities of Am-241, Am-243, and Np-237. A significant proportion also contains Cs-137 and Pa-231.

- No U-236 or U-238 was detected, confirming AK information that uranium is not expected to be present in process waste generated under the P/S codes listed as the source of waste in these drums

- U-235 is present only at trace levels in 5 drums

- In 20 drums (91 percent), Am-241 and U-234 are enriched beyond what would be predicted if they were present solely due to the decay of their precursors in the source plutonium, indicating that significant fractionation of americium and uranium from plutonium occurs during processing operations

14.4 Headspace Gas Data

Headspace gas data are examined to confirm AK information about the presence or absence of hazardous constituents in a given waste stream, and the assignment of each drum to the appropriate mixed or nonmixed waste stream. Table 12 summarizes VOC target analyte concentrations for headspace gas samples from 55 containers assigned to waste stream TA-55-19. (No approved data are yet available for drums from waste stream TA-55-20.) These data confirm the AK information:

- Altogether, 13 different VOCs were detected in these drums. All are documented as having been present or used in TA-55 processes contributing to waste stream TA-55-19, and HWNs have already been assigned to this waste stream for these constituents.

- Only one VOC, methylene chloride, had a 90% Upper Concentration Limit (UCL_{90}) value that was above its program required quantitation limit (PRQL).

- Four VOCs—acetone, 1,1,2-trichloro-1,2,2-trifluoroethane, methyl ethyl ketone, and toluene—had UCL_{90} values below the PRQL but were present in at least one drum at a concentration above the PRQL.

- One VOC (methanol) had a mean concentration above its Method Detection Limit (MDL) but no concentrations above the PRQL.

- Seven VOCs had mean concentrations below their MDL, but were present in at least one drum at a concentration above the MDL.

- All other target analyte VOCs were below the MDL.

- No Tentatively Identified Compounds (TICs) were detected.

Table 12. Headspace Gas Data for Target Analytes in Waste Stream TA-55-19

ANALYTE	MDL (ppmv)	PRQL (ppmv)	No. of Samples Analyzed	No. of Samples Above MDL	No. of Samples Above PRQL	VOC Concentrations (ppmv)			EPA HWN
						Mean	UCL_{90}*	Maximum	AssignedAK
Benzene	1.96	10	55	4	0	1.2	1.8	5	F005, D018
Bromoform	2.27	10	55	0	0	1.1	1.1	—	—
Carbon Tetrachloride	2.00	10	55	1	0	1.0	1.0	3	D019
Chlorobenzene	1.93	10	55	1	0	1.0	1.0	2	F002, D021
Chloroform	1.85	10	55	4	0	1.0	1.4	3	D022
1,1-Dichloroethane	1.78	10	55	2	0	1.0	1.9	4	—
1,2-Dichloroethane	2.40	10	55	0	0	1.2	1.2	—	—
1,1-Dichloroethene	2.74	10	55	0	0	1.4	1.4	—	—
Cis-1,2-Dichloroethylene	2.06	10	55	0	0	1.0	1.0	—	—
Ethyl Benzene	1.72	10	55	0	0	0.9	0.9	—	F003
Ethyl Ether	1.30	10	55	0	0	0.65	0.65	—	F003
Methylene Chloride	1.97	10	55	11	8	8.7	18.1	100	F002
1,1,2,2-Tetrachloroethane	1.62	10	55	0	0	0.8	0.8	—	—
Tetrachloroethene	1.44	10	55	0	0	0.7	0.7	—	F002, D039
Toluene	1.67	10	55	33	11	6.5	8.5	51	F005
1,1,2-Trichloro 1,2,2-trifluoroethane (Freon-113)	1.79	10	55	1	1	1.7	1.7	44	F002
1,1,1-Trichloroethane	1.82	10	55	1	0	1.0	1.0	4	—
Trichloroethene	1.31	10	55	0	0	0.7	0.7	6.0	F002, D040
m-Xylene and p-xylene	3.62	10	55	0	0	1.8	1.8	—	F003
o-Xylene	1.90	10	55	0	0	0.95	0.95	—	F003
Acetone	16.12	100	55	31	13	69.7	91.2	410	F003
Butanol	8.78	100	55	1	0	4.8	4.8	29	—
Methanol	11.42	100	55	10	0	14.6	24.3	84	F003
Methyl ethyl ketone	18.42	100	55	4	0	10.1	12.6	23	F005, D035
Methyl isobutyl ketone	16.05	100	55	0	0	8.0	8.0	—	—

Source: TWCP-4722; VOC target analyte list for debris waste from WIPP WAP, Table B3-2.

ppmv, part per million by volume; MDL, Method Detection Limit; PRQL, Program Required Quantitation Limit; UCL90, 90% Upper Concentration Limit

— Not applicable

* For samples with concentrations below the MDL, UCL_{90} concentrations are calculated by assuming concentrations were one-half of the MDL values as determined in the MDL study dated 6/19/00 (TWCP-3248).

These results are consistent with AK information summarized in this waste stream report, insofar as all of the VOCs that were detected are known to have been present in TA-55 operations. The data confirm that assignment of these HWNs based on AK information is conservative.

Table 13 summarizes concentrations of potentially flammable VOCs, hydrogen, and methane for headspace gas samples from the same 55 containers as are included in Table 12. All were below the WIPP WAC limits. The average concentration of potentially flammable VOCs for this set of 55 drums was 128 ±101 ppmv, with a maximum of 473 ppm (TWCP-4722). No methane was detected in any of the drums, and hydrogen concentrations were lower by more than an order of magnitude than the WAC limit of 5 percent.

In conclusion, the headspace gas data confirm the presence of VOCs in waste stream TA-55-19. All VOCs present were expected based on AK. However, no correlation is seen between the presence and absence of a specific VOC and its documented use in a process known to have contributed waste placed in a particular drum. For example, about 60 percent of the containers show measurable concentrations of acetone and/or toluene in the headspace gas, and 20 percent contain methylene chloride, but less than half of the drums in which these chemicals are present contain waste items generated by activities that were known to have used these chemicals. Because acetone, toluene, and methylene chloride are present as solvents used in the manufacturing of plastics, the presence of these constituents in headspace gases in drums without any other known source of these VOCs is attributed to (1) off-gassing of constituents in the tape and plastic bags used to package waste items, and (2) radiolytic degradation of the plastic, rubber, tape, Tygon, and similar items in the waste (TWCP-2102).

15.0 CITED PROCEDURES AND REQUIREMENTS DOCUMENTS

- 40 CFR Part 261—Identification and Listing of Hazardous Wastes
- 49 CFR Subpart C—Segregation and separation chart of hazardous materials. Section 177.848, Segregation of hazardous materials
- *Acceptable Knowledge Documentation* (TWCP-QP-1.1-021)
- *Hazardous Waste Facility Permit Issued to the Waste Isolation Pilot Plant* (EPA No. NM4890139088) (Attachment B, Waste Analysis Plan)
- *NIOSH Pocket Guide to Chemical Hazards* (1997). National Institute for Occupational Safety and Health (NIOSH) Publication #97-140.
- *Nonconformance Reporting and Tracking* (TWCP-QP-1.1-007)

Table 13. Headspace Gas Data for Flammable VOCs, Hydrogen and Methane in Waste Stream TA-55-19

ANALYTE	Lower Explosive Limit (LEL)	No. of Samples Analyzed	No. of Samples Above MDL	Maximum Measured Concentration (ppmv)	Evidence for Presence of Gas in Waste	
					Gas Data	AK
Acetone	2.5%	55	31	410	X	X
Benzene	1.2%	55	4	5	X	X
Butanol	1.4%	55	1	29	X	X
Chlorobenzene	1.3%	55	1	2	X	X
Cyclohexane	1.3%	55	0	—	—	—
1,1-Dichloroethane	5.4%	55	2	4	X	—
1,2-Dichloroethane	6.2%	55	0	—	—	—
1,1-Dichloroethene	6.5%	55	0	—	—	X
Cis-1,2-Dichloroethylene	5.6%	55	0	—	—	—
Ethyl Benzene	0.8%	55	0	—	—	X
Ethyl Ether	1.9%	55	0	—	—	X
Methanol	6.0%	55	10	84	X	X
Methyl ethyl ketone	1.4% at 200 °F	55	4	23	X	X
Methyl isobutyl ketone	1.2% at 200 °F	55	0	—	—	—
Toluene	1.1%	55	33	51	X	X
1,3,5-Trimethylbenzene	Not known	55	0	—	—	—
1,2,4-Trimethylbenzene	0.9%	55	0	—	—	—
m-Xylene and p-xylene	1.1%	55	0	—	—	X
o-Xylene	0.9%	55	0	—	—	X
Total potentially flammable VOCs in a single container*	—	**55**	—	**473**	**X**	**X**
Hydrogen*	4%	55	32	0.38%	X	X
Methane*	5.3%	55	0	—	—	X

Source: TWCP-4722

ppmv, part per million by volume; MDL, Method Detection Limit

LEL, Lower explosive (flammable) limit in air, % by volume (at room temperature); data from NIOSH Pocket Guide to Chemical Hazards (NIOSH, 1997)

— Not applicable or not detected

* WIPP WAC requirements state that a waste container cannot be shipped if its headspace gas concentration exceeds 500 ppm for total flammable VOCs, 5% for hydrogen, or 500 ppm for methane concentration.

** The average flammable VOC concentration is 128 ±101 ppm (TWCP-4722). Gases that were below detection are taken into account in this calculation by assuming they are present at concentrations that are equal to one-half of the MDL values.

- *Performing Nondestructive Testing Using the Mobile Real-Time Radiography System* (TWCP-DTP-1.2-008)
- *Reconciliation of Visual Examination and Radiography Information* (TWCP-QP-1.1-028)
- *Transuranic Package Transporter (TRUPACT)-II Content Codes* (DOE/WIPP-89-004)
- *Waste Analysis at Facilities that Generate, Treat, Store and Dispose of Hazardous Waste* (EPA)
- *Waste Characterization Data Reconciliation with Acceptable Knowledge* (TWCP-DTP-1.2-064)
- *Waste Isolation Pilot Plant Transuranic Waste Baseline Inventory Report* (CAO-94-1005)

ACCEPTABLE KNOWLEDGE ROADMAP

Waste Streams: TA-55-19 and TA-55-20.

Copies of these documents are in the TWCP RMDC Center. Refer to *Records Management* (TWCP-QP-1.1-004) for information on requesting copies.

TWCP Record No.	Information Category Code	Information	Source	Summary	Limitations
AP-SWO-006,R.3.1	A	Describes how the TRU Waste Storage Record (TWSR) is prepared, reviewed, submitted, and entered into a TRU waste database	*Review and completion of TWSR*	Section 8.6 describes how waste generator information submitted on the TWSR, as well as other receipt and storage information, is entered into the LANL TRU Waste Database for TRU waste stored at TA-54.	None
NMT7-AP-TA55-018,R3	A	Contains waste generator information required by the LANL TRU Waste Certification Plan	*TA-55 Transuranic Waste Interface Document (TWID)*	Contains information on waste characterization, waste packaging configurations, and TRUCON codes for newly-generated TA-55 waste. Describes how waste generator information in the TA-55 Waste Management System (WMS) database is certified and maintained for waste generated at the TA-55 facility. Contains information on current and projected waste stream volumes.	Document does not give information about RCRA constituents introduced or present in the processes
QP-TP-WMS-000.001	B	Compilation of TA-55 waste generator information, for individual waste containers.	TA-55 Waste Management System (WMS)	Certified and current database of waste container identifiers, waste codes (e.g., IDC, RSWD, EPA HWNs), assay results, packaging dates, waste material content and generating processes for TA-55 wastes.	Overview document – Generator Attachments provide more detailed information.
TWCP-698	B	Gives Material Type compositions	NMT Memo, NMT-7 WM/EC-96-032 Benchmark Environmental Corp. Memo, AL-7193 BEC	Gives Material Type compositions	Does not give information on how material may fractionate in TA-55 waste processes.

* Information Category Codes: A = forms intended for use in waste certification, B = data from controlled databases and published documents, C = unpublished data, and D = interviews, memos, and letters

TWCP Record No.	Information Category Code	Information	Source	Summary	Limitations
TWCP-700	C	*Generator Attachment* to the *Certification Plan*	*TA-55 Attachment, 1955,* TRUWM-TA55-CPA-03, R00	Documents controls to meet WIPP WAC were implemented and how independent verification was accomplished.	Information is not extremely detailed.
TWCP-701	C	*Generator Attachment* to the *Certification Plan*	*TA-55 Attachment, 1987,* TRU-MST12-CPA-03,R00	Documents controls to meet WIPP WAC were implemented and how independent verification was accomplished.	Information is not extremely detailed.
TWCP-816	D	Jim Foxx Interview on Number of Layers of Packaging	C.L. Foxx, Los Alamos National Laboratory	Provides an explanation of why some waste containers may be packaged with 6 layers of confinement	No Direct way to differentiate between and 6 layers of packaging
TWCP-882 (UCNI)	D	Secondary Radionuclides and Toxic Metals in TA-55 TRU Waste	Memo from Jim Foxx	Lists additional radionuclides and metals potentially in waste, subdivided by P/S code. Covers time period from 1978 to present.	Best information available, but it is based on worker recollection because other records are not available.
TWCP-886	C	Color Flow Diagram of Pu-processes at TA-55.	Diagram from Jim Foxx	Indicates that process inputs are thermally treated and that heavy metals from process inputs end up in the nitric acid evaporator bottoms.	Does not indicate solvent input to processes.
TWCP-887	D	Co-mingling of Defense and Non-Defense TRU Waste	Memo from Jim Foxx	Wastes generated from defense and non-defense activities were not segregated at TA-55 through 1997	None
TWCP-2102	B	Presence of VOCs in headspace gas resulting from off-gassing and radiolytic degradation of plastics	Waste Determination Report for Waste Stream TA-55-43 Lot No. 01, Report LA-UR-98-3610, by Rogers et al.	Reviews published literature and presents data and calculations supporting that VOCs are present in headspace gas of TRU waste containers as a result of off-gassing and radiolytic degradation of plastics	None

* Information Category Codes: A = forms intended for use in waste certification, B = data from controlled databases and published documents, C = unpublished data, and D = interviews, memos, and letters

TWCP Record No.	Information Category Code	Information	Source	Summary	Limitations
TWCP-2130	D	Estimate of the minimum detection limit for Am-243, Np-237, Pa-231, and Th-232 for FRAM analyses	Criteria for reporting Am-243, Np-237, Pa-231, and Th-232 on mobile PAN radioassay data sheets	If the error in the peak area for the isotopes Am-243, Np-237, Pa-231, and Th-232 is greater than 21.5% in the FRAM report, then that isotope is considered to be below the minimum detectable activity.	Memo refers specifically to PAN radioassay data, but the same reasoning is applied to TGS and HENC assay data as well, and to all radionuclides detectable by FRAM.
TWCP-2501	B	"Backlog Waste Reassessment Baseline Book, Waste Form 34"	Rocky Flats Environmental Technology Site Report 1995	Page WF34-10 contains results of tests for corrosivity	Tests are on residues rather than waste that is lower in Pu content; hence, they are conservative.
TWCP-3248	C	Method Detection Limits for Headspace Gas Analyses	MDL studies with data	MDL values for VOCs, determined 06/19/00	Different MDL values would have been in effect at the times that the data included in Table 12 of this AK report were acquired, so the MDL values should only be considered as an approximate guide.
TWCP-3288	B	Drum in TA-55-19 waste stream contained material identified as metal by the RTR operator, thereby leading to an apparent WMC of S5110 (for metal debris). After reviewing with the generator how these drums were packaged with very dense in-house fabricated plastic material (Kynar, also known as PVDF) used to line gloveboxes and build equipment in chloride operations starting in about 1988. Hence, the AK WMC S5300 was correct	NCR-00-028	AK WMC information was correct.	None
TWCP-3289	B	Same as for TWCP-3288	NCR-00-027	AK WMC information was correct.	None

* Information Category Codes: A = forms intended for use in waste certification, B = data from controlled databases and published documents, C = unpublished data, and D = interviews, memos, and letters

TWCP Record No.	Information Category Code	Information	Source	Summary	Limitations
TWCP-3290	B	Same as for TWCP-3288	NCR-00-026	AK WMC information was correct.	None
TWCP-3291	B	Same as for TWCP-3288	NCR-00-025	AK WMC information was correct.	None
TWCP-3547/ Cl-25 (UCNI)	D	Answers to questions about chloride processes	Interview with Jim Foxx, 9/23/99	Answers to questions on Chloride processes; CLS-1 solvent list	None
TWCP-3568/ N-74	C	Chemical list; process description (P/S code CF)	Organic Liquid Emulsification, TRU-NMT2-DP-13, R00; TRUWM-TA55-DP-13-R00; 8/30/93 through 9/30/94	Emulsifying waste oil and other organic liquids for cement fixation.	None
TWCP-3568/ N-82	C	Clarification of specific processes within the nitrate operations at TA-55	Jim Foxx, SME, response to comments received on the draft Acceptable Knowledge Summary Report for TA-55 Nitrate Operations, 2/25/00	Resolutions to the questions and issues raised by Pam Rogers during her review of the Acceptable Knowledge Summary Report for TA-55 Nitrate Operations, 2/25/00	Information is based on SME knowledge.
TWCP-3730 (UCNI)	B	Pyrophoricity characterization	Characterization of Direct Oxide Salts (LA-CP-95-0098)	Hydrogen generation and pyrophoricity of DOR salts. Also gives reference for MSE, ER, and Cr-containing salts.	None
TWCP-3731	D	Sodium pyrophoricity in pyrochemical salts	Memo (MST-12-ARO-88-052)	Treatment of sodium in salts is effective	Sodium only
TWCP-3732	C	Experimental data on calcium pyrophoricity in salts	Memo (MST-12-ARO-88-077)	Treatment of calcium in salts is effective	Calcium only
TWCP-3943	B	Procedure for Waste Management at TA-55	TA-55 Document, 406-GEN-R00	Contains information on waste management procedures in 1978	None, but doesn't address today's waste management concerns
TWCP-3947	A	Reconciliation between AK, VE and RTR data for drum from waste stream TA-55-19 (per Sampling Plan, R3)	LA00-VE-003	VE, AK and RTR data on WMC, number and types of packaging layers, TRUCON code, and waste items in drum	None
TWCP-3948	A	Reconciliation between AK, VE and RTR data for drum from waste stream TA-55-19 (per Sampling Plan, R3)	LA00-VE-005	VE, AK and RTR data on WMC, number and types of packaging layers, TRUCON code, and waste items in drum	None

* Information Category Codes: A = forms intended for use in waste certification, B = data from controlled databases and published documents, C = unpublished data, and D = interviews, memos, and letters

TWCP Record No.	Information Category Code	Information	Source	Summary	Limitations
TWCP-3949	A	Reconciliation between AK, VE and RTR data for drum from waste stream TA-55-19 (per Sampling Plan, R3)	LA00-VE-008	VE, AK and RTR data on WMC, number and types of packaging layers, TRUCON code, and waste items in drum	None
TWCP-3950	A	Reconciliation between AK, VE and RTR data for drum from waste stream TA-55-19 (per Sampling Plan, R3)	LA00-VE-004	VE, AK and RTR data on WMC, number and types of packaging layers, TRUCON code, and waste items in drum	None
TWCP-3951	A	Reconciliation between AK, VE and RTR data for drum from waste stream TA-55-19 (per Sampling Plan, R3)	LA00-VE-007	VE, AK and RTR data on WMC, number and types of packaging layers, TRUCON code, and waste items in drum	None
TWCP-4009	A	Radioassay data for drum from Waste Stream TA-55-19 and -20 per Sampling Plan Rev. 3	LA00-HENC-007	Radioassay data	None
TWCP-4019	A	RTR data for drums from waste stream TA-55-19 or TA-55-20	LA00-RTR-006	RTR data on prohibited items, WMC, packaging layers, and estimated volumes and weights of waste material parameters in drum	Sampling plan (Rev 3) referenced in this batch data report may not be up-to-date with respect to waste stream assignments for containers
TWCP-4020	A	RTR data for drums from waste stream TA-55-19 or TA-55-20	LA00-RTR-009	RTR data on prohibited items, WMC, packaging layers, and estimated volumes and weights of waste material parameters in drum	Sampling plan (Rev 3) referenced in this batch data report may not be up-to-date with respect to waste stream assignments for containers
TWCP-4021	A	RTR data for drums from waste stream TA-55-19 or TA-55-20	LA00-RTR-008	RTR data on prohibited items, WMC, packaging layers, and estimated volumes and weights of waste material parameters in drum	Sampling plan (Rev 3) referenced in this batch data report may not be up-to-date with respect to waste stream assignments for containers
TWCP-4022	A	Reconciliation between AK, VE and RTR data for drum from waste stream TA-55-19 (per Sampling Plan, R3)	LA00-VE-006	VE, AK and RTR data on WMC, number and types of packaging layers, TRUCON code, and waste items in drum	None

* Information Category Codes: A = forms intended for use in waste certification, B = data from controlled databases and published documents, C = unpublished data, and D = interviews, memos, and letters

TWCP Record No.	Information Category Code	Information	Source	Summary	Limitations
TWCP-4023	A	Radioassay data for drum from Waste Stream TA-55-19 and – 20 per Sampling Plan Rev. 3	LA00-TGS-003	Radioassay data	None
TWCP-4024	A	P/S codes of waste items packaged into drums, based on waste generator records	LA00-FRAM-008	Lists P/S codes for waste items in several drums that underwent VE	No reference to original source of AK information
TWCP-4025	A	P/S codes of waste items packaged into drums, based on waste generator records	LA00-FRAM-009	Lists P/S codes for waste items in several drums that underwent VE	No reference to original source of AK information
TWCP-4052	A	P/S codes of waste items packaged into drums, based on waste generator records	LA00-FRAM-010	Lists P/S codes for waste items in several drums that underwent VE	No reference to original source of AK information
TWCP-4078	A	Radioassay data for drum from Waste Stream TA-55-19 and – 20 per Sampling Plan Rev. 3	LA00-TGS-002	Radioassay data	None
TWCP-4080	A	RTR data for drums from waste stream TA-55-19 or TA-55-20	LA00-RTR-004	RTR data on prohibited items, WMC, packaging layers, and estimated volumes and weights of waste material parameters in drum	Sampling plan (Rev 3) referenced in this batch data report may not be up-to-date with respect to waste stream assignments for containers
TWCP-4158	A	P/S codes of waste items packaged into drums, based on waste generator records	LA00-FRAM-007	Lists P/S codes for waste items in several drums that underwent VE	No reference to original source of AK information
TWCP-4159	A	Radioassay data for drum from Waste Stream TA-55-19 and – 20 per Sampling Plan Rev. 3	LA00-FRAM-003	Radioassay data	None
TWCP-4164	D	Answers to questions about various P/S codes	Interview with Jim Foxx, 10/16/00	Answers to questions on use of Ag, disposal of ash and resins, and use of gases.	None

* Information Category Codes: A = forms intended for use in waste certification, B = data from controlled databases and published documents, C = unpublished data, and D = interviews, memos, and letters

TWCP Record No.	Information Category Code	Information	Source	Summary	Limitations
TWCP-4166	D	Answers to questions about P/S codes DO, EV, HP, CF, OR, RM, PY	Interview with Jim Foxx, 10/17/00	Answers to questions on use of Cr and Ag, RCRA metals in cement, asbestos in furnaces and gloves, and disposal of spray cans used in gloveboxes.	None
TWCP-4190	B	Same as for TWCP-3288	NCR-00-013	AK WMC information was correct.	None
TWCP-4212	A	Radioassay data for drum from Waste Stream TA-55-19 and – 20 per Sampling Plan Rev. 3	LA00-HENC-008	Radioassay data	None
TWCP-4219	A	RTR data for drums from waste stream TA-55-19 or TA-55-20	LA00-RTR-005	RTR data on prohibited items, WMC, packaging layers, and estimated volumes and weights of waste material parameters in drum	Sampling plan (Rev 3) referenced in this batch data report may not be up-to-date with respect to waste stream assignments for containers
TWCP-4225	A	Radioassay data for drum from Waste Stream TA-55-19 and – 20 per Sampling Plan Rev. 3	LA00-HENC-004	Radioassay data	None
TWCP-4226	A	Radioassay data for drum from Waste Stream TA-55-19 and – 20 per Sampling Plan Rev. 3	LA00-HENC-003	Radioassay data	None
TWCP-4303	A	P/S codes of waste items packaged into drums, based on waste generator records	LA00-TGS-004	Drum 54163 contains waste generated by P/S codes DS, LR, SP and SS; also lists codes for drum 54146	No reference to original source of AK information; listed codes match for drum 54146 but do not match for drum 54163, compared to those listed in TWCP-4052.
TWCP-4326	A	Reconciliation between AK, VE and RTR data for drum from waste stream TA-55-19 (per Sampling Plan, R3)	LA00-3.4.1-008	VE, AK and RTR data on WMC, number and types of packaging layers, TRUCON code, and waste items in drum	None
TWCP-4327	A	Reconciliation between AK, VE and RTR data for drum from waste stream TA-55-19 (per Sampling Plan, R3)	LA00-3.4.1-009	VE, AK and RTR data on WMC, number and types of packaging layers, TRUCON code, and waste items in drum	None

* Information Category Codes: A = forms intended for use in waste certification, B = data from controlled databases and published documents, C = unpublished data, and D = interviews, memos, and letters

TWCP Record No.	Information Category Code	Information	Source	Summary	Limitations
TWCP-4392	A	Reconciliation between AK, VE and RTR data for drum from waste stream TA-55-19 (per Sampling Plan, R3)	LA00-VE-011	VE, AK and RTR data on WMC, number and types of packaging layers, TRUCON code, and waste items in drum	None
TWCP-4393	A	Reconciliation between AK, VE and RTR data for drum from waste stream TA-55-19 (per Sampling Plan, R3)	LA00-VE-010	VE, AK and RTR data on WMC, number and types of packaging layers, TRUCON code, and waste items in drum	None
TWCP-4394	A	Reconciliation between AK, VE and RTR data for drum from waste stream TA-55-19 (per Sampling Plan, R3)	LA00-3.4.1-007	VE, AK and RTR data on WMC, number and types of packaging layers, TRUCON code, and waste items in drum	None
TWCP-4399	A	RTR data for drums from waste stream TA-55-19 or TA-55-20	LA00-RTR-010	RTR data on prohibited items, WMC, packaging layers, and estimated volumes and weights of waste material parameters in drum	Sampling plan (Rev 3) referenced in this batch data report may not be up-to-date with respect to waste stream assignments for containers
TWCP-4400	A	RTR data for drums from waste stream TA-55-19 or TA-55-20	LA00-RTR-011	RTR data on prohibited items, WMC, packaging layers, and estimated volumes and weights of waste material parameters in drum	Sampling plan (Rev 3) referenced in this batch data report may not be up-to-date with respect to waste stream assignments for containers
TWCP-4427	A	Reconciliation between AK, VE and RTR data for drum from waste stream TA-55-19 (per Sampling Plan, R3)	LA00-VE-009	VE, AK and RTR data on WMC, number and types of packaging layers, TRUCON code, and waste items in drum	None
TWCP-4457	A	RTR data for drums from waste stream TA-55-19 or TA-55-20	LA00-RTR-025	RTR data on prohibited items, WMC, packaging layers, and estimated volumes and weights of waste material parameters in drum	Sampling plan (Rev 3) referenced in this batch data report may not be up-to-date with respect to waste stream assignments for containers
TWCP-4458	A	RTR data for drums from waste stream TA-55-19 or TA-55-20	LA00-RTR-020	RTR data on prohibited items, WMC, packaging layers, and estimated volumes and weights of waste material parameters in drum	Sampling plan (Rev 3) referenced in this batch data report may not be up-to-date with respect to waste stream assignments for containers

* Information Category Codes: A = forms intended for use in waste certification, B = data from controlled databases and published documents, C = unpublished data, and D = interviews, memos, and letters

TWCP Record No.	Information Category Code	Information	Source	Summary	Limitations
TWCP-4459	A	RTR data for drums from waste stream TA-55-19 or TA-55-20	LA00-RTR-002	RTR data on prohibited items, WMC, packaging layers, and estimated volumes and weights of waste material parameters in drum	Sampling plan (Rev 3) referenced in this batch data report may not be up-to-date with respect to waste stream assignments for containers
TWCP-4464	A	RTR data for drums from waste stream TA-55-19 or TA-55-20	LA00-RTR-017	RTR data on prohibited items, WMC, packaging layers, and estimated volumes and weights of waste material parameters in drum	Sampling plan (Rev 3) referenced in this batch data report may not be up-to-date with respect to waste stream assignments for containers
TWCP-4471	A	RTR data for drums from waste stream TA-55-19 or TA-55-20	LA00-RTR-024	RTR data on prohibited items, WMC, packaging layers, and estimated volumes and weights of waste material parameters in drum	Sampling plan (Rev 3) referenced in this batch data report may not be up-to-date with respect to waste stream assignments for containers
TWCP-4542	A	RTR data for drums from waste stream TA-55-19 or TA-55-20	LA01-RTR-002	RTR data on prohibited items, WMC, packaging layers, and estimated volumes and weights of waste material parameters in drum	Sampling plan (Rev 3) referenced in this batch data report may not be up-to-date with respect to waste stream assignments for containers
TWCP-4543	A	RTR data for drums from waste stream TA-55-19 or TA-55-20	LA00-RTR-012	RTR data on prohibited items, WMC, packaging layers, and estimated volumes and weights of waste material parameters in drum	Sampling plan (Rev 3) referenced in this batch data report may not be up-to-date with respect to waste stream assignments for containers
TWCP-4544	A	RTR data for drums from waste stream TA-55-19 or TA-55-20	LA00-RTR-023	RTR data on prohibited items, WMC, packaging layers, and estimated volumes and weights of waste material parameters in drum	Sampling plan (Rev 3) referenced in this batch data report may not be up-to-date with respect to waste stream assignments for containers
TWCP-4545	A	RTR data for drums from waste stream TA-55-19 or TA-55-20	LA01-RTR-001	RTR data on prohibited items, WMC, packaging layers, and estimated volumes and weights of waste material parameters in drum	Sampling plan (Rev 3) referenced in this batch data report may not be up-to-date with respect to waste stream assignments for containers
TWCP-4566	A	RTR data for drums from waste stream TA-55-19 or TA-55-20	LA00-RTR-021	RTR data on prohibited items, WMC, packaging layers, and estimated volumes and weights of waste material parameters in drum	Sampling plan (Rev 3) referenced in this batch data report may not be up-to-date with respect to waste stream assignments for containers

* Information Category Codes: A = forms intended for use in waste certification, B = data from controlled databases and published documents, C = unpublished data, and D = interviews, memos, and letters

TWCP Record No.	Information Category Code	Information	Source	Summary	Limitations
TWCP-4570	A	RTR data for drums from waste stream TA-55-19 or TA-55-20	LA00-RTR-022	RTR data on prohibited items, WMC, packaging layers, and estimated volumes and weights of waste material parameters in drum	Sampling plan (Rev 3) referenced in this batch data report may not be up-to-date with respect to waste stream assignments for containers
TWCP-4572	A	RTR data for drums from waste stream TA-55-19 or TA-55-20	LA01-RTR-003	RTR data on prohibited items, WMC, packaging layers, and estimated volumes and weights of waste material parameters in drum	Sampling plan (Rev 3) referenced in this batch data report may not be up-to-date with respect to waste stream assignments for containers
TWCP-4573	A	RTR data for drums from waste stream TA-55-19 or TA-55-20	LA00-RTR-026	RTR data on prohibited items, WMC, packaging layers, and estimated volumes and weights of waste material parameters in drum	Sampling plan (Rev 3) referenced in this batch data report may not be up-to-date with respect to waste stream assignments for containers
TWCP-4574	A	RTR data for drums from waste stream TA-55-19 or TA-55-20	LA00-RTR-027	RTR data on prohibited items, WMC, packaging layers, and estimated volumes and weights of waste material parameters in drum	Sampling plan (Rev 3) referenced in this batch data report may not be up-to-date with respect to waste stream assignments for containers
TWCP-4577	A	RTR data for drums from waste stream TA-55-19 or TA-55-20	LA00-RTR-028	RTR data on prohibited items, WMC, packaging layers, and estimated volumes and weights of waste material parameters in drum	Sampling plan (Rev 3) referenced in this batch data report may not be up-to-date with respect to waste stream assignments for containers
TWCP-4720	B	Describes the procedure to be taken at TA-55 in the event of a misfire or unconsumed explosives (from the Impact Test Facility 40-mm gun, P/S codes ITF and ITF4) to ensure that explosives do not enter the waste stream	40-mm Powder Breech Project Waste Management Plan, Rev. 2 (issued March 27, 2000)	Procedure to be taken at TA-55 in the event of a misfire or unconsumed explosives (from the Impact Test Facility 40-mm gun) to ensure that explosives do not enter the waste stream	Does not appear to be a controlled document. Without revision history, cannot tell when this document was first issued, and how the potential for unconsumed explosives was addressed when the Impact Test Facility (ITF) began in 1996
TWCP-4721	A	RTR data for drums from waste stream TA-55-19 or TA-55-20	LA00-RTR-003	RTR data on prohibited items, WMC, packaging layers, and estimated volumes and weights of waste material parameters in drum	Sampling plan (Rev 3) referenced in this batch data report may not be up-to-date with respect to waste stream assignments for containers.

* Information Category Codes: A = forms intended for use in waste certification, B = data from controlled databases and published documents, C = unpublished data, and D = interviews, memos, and letters

TWCP Record No.	Information Category Code	Information	Source	Summary	Limitations
TWCP-4722	A	UCL-90 calculations for headspace gas concentrations in 55 drums from waste stream TA-55-19 per (Sampling Plan, R3)	UCL90 Calculations for TA-55-19-R2	UCL-90 calculations for headspace gas concentrations in 55 drums from waste stream TA-55-19 per (Sampling Plan, R3)	None
TWCP-4797	A	RTR data for drums from waste stream TA-55-19 or TA-55-20	LA01-RTR-008	RTR data on prohibited items, WMC, packaging layers, and estimated volumes and weights of waste material parameters in drum	Sampling plan (Rev 3) referenced in this batch data report may not be up-to-date with respect to waste stream assignments for containers.
TWCP-4800	A	Reconciliation between AK, VE and RTR data for drum from waste stream TA-55-19 (per Sampling Plan, R3)	LA00-3.4.1-006	VE, AK and RTR data on WMC, number and types of packaging layers, TRUCON code, and waste items in drum	None
TWCP-4835	A	RTR data for drums from waste stream TA-55-19 or TA-55-20	LA00-RTR-001	RTR data on prohibited items, WMC, packaging layers, and estimated volumes and weights of waste material parameters in drum	Sampling plan (Rev 3) referenced in this batch data report may not be up-to-date with respect to waste stream assignments for containers
TWCP-5077	A	Reconciliation between AK, VE and RTR data for drum from waste stream TA-55-19 (per Sampling Plan, R3)	LA00-VE-002	VE, AK and RTR data on WMC, number and types of packaging layers, TRUCON code, and waste items in drum	None
TWCP-5083	A	Reconciliation between AK, VE and RTR data for drum from waste stream TA-55-19 (per Sampling Plan, R3)	LA01-VE-003	VE, AK and RTR data on WMC, number and types of packaging layers, TRUCON code, and waste items in drum	None
TWCP-5084	A	Reconciliation between AK, VE and RTR data for drum from waste stream TA-55-19 (per Sampling Plan, R3)	LA00-VE-001	VE, AK and RTR data on WMC, number and types of packaging layers, TRUCON code, and waste items in drum	None

* Information Category Codes: A = forms intended for use in waste certification, B = data from controlled databases and published documents, C = unpublished data, and D = interviews, memos, and letters

TWCP Record No.	Information Category Code	Information	Source	Summary	Limitations
TWCP-5085	A	Reconciliation between AK, VE and RTR data for drum from waste stream TA-55-19 (per Sampling Plan, R3)	LA01-VE-004	VE, AK and RTR data on WMC, number and types of packaging layers, TRUCON code, and waste items in drum	None
TWCP-5086	B	P/S Codes for TA-55 Waste items, listed by drum	P/S codes for waste items in individual drums are either from the TA-55 Waste Management System or from the certified data base	P/S Codes for drums that underwent VE	Only some drums are included
TWCP-5110	A	RTR data for drums from waste stream TA-55-19 or TA-55-20	LA01-RTR-007	RTR data on prohibited items, WMC, packaging layers, and estimated volumes and weights of waste material parameters in drum	Sampling plan (Rev 3) referenced in this batch data report may not be up-to-date with respect to waste stream assignments for containers.
TWCP-5112	A	Reconciliation between AK, VE and RTR data for drum from waste stream TA-55-19 (per Sampling Plan, R3)	LA01-VE-001	VE, AK and RTR data on WMC, number and types of packaging layers, TRUCON code, and waste items in drum	None
TWCP-5115	A	Reconciliation between AK, VE and RTR data for drum from waste stream TA-55-20 (per Sampling Plan, R3)	LA00-3.4.1-003	VE, AK and RTR data on WMC, number and types of packaging layers, TRUCON code, and waste items in drum	None
TWCP-5120	A	Reconciliation between AK, VE and RTR data for drum from waste stream TA-55-19 (per Sampling Plan, R3)	LA01-VE-005	VE, AK and RTR data on WMC, number and types of packaging layers, TRUCON code, and waste items in drum	None
TWCP-5121	A	RTR data for drums from waste stream TA-55-19 or TA-55-20	LA01-RTR-009	RTR data on prohibited items, WMC, packaging layers, and estimated volumes and weights of waste material parameters in drum	Sampling plan (Rev 3) referenced in this batch data report may not be up-to-date with respect to waste stream assignments for containers.

* Information Category Codes: A = forms intended for use in waste certification, B = data from controlled databases and published documents, C = unpublished data, and D = interviews, memos, and letters

TWCP Record No.	Information Category Code	Information	Source	Summary	Limitations
TWCP-5147	A	RTR data for drums from waste stream TA-55-19 or TA-55-20	LA01-RTR-013	RTR data on prohibited items, WMC, packaging layers, and estimated volumes and weights of waste material parameters in drum	Sampling plan (Rev 3) referenced in this batch data report may not be up-to-date with respect to waste stream assignments for containers.
TWCP-5157	D	Use of Kynar lining in chloride operations	Interview with Jim Foxx (TA-55 SME) on March 17, 2001	Kynar began to be used to line gloveboxes in chloride operations in 1988, and installation was completed in 1992.	Does not explicitly list all P/S codes in which Kynar was used
TWCP-5158	D	Chemical use in P/S code FF	Interview with Fred Hampel (TA-55 SME) on 4/19/01	Magnesium perchlorate was used in the glovebox line in P/S code FF, and was the only chemical used there. It was used as a water getter, and was changed once during the period 1987 to 1992. The spent chemical was sent to cement fixation, P/S code CF.	No information about after 1992
TWCP-5163	B	Waste generator records for 5 drums of TA-55 combustible debris waste packaged in 1985-86	Radioactive Solid Waste Disposal (RSWD) Records	Lists P/S codes (embedded in waste item identifiers) for drums S855627, S862004, S862274, S862456, and S862286.	From noncertified TRU waste data base
TWCP-5164	D	Sources of Cs-137 and Pa-231 in TA-55 TRU waste	Interview with Jim Foxx (TA-55 SME) on April 2, 2001	Plutonium operations never handled Cs-137 or Pa-231 in any of the Pu processing areas at TA-55. However, Cs-137 is expected to be present in the wastes because it is a fission product of several Pu isotopes. Pa-231 is expected to be present (as a function of the age of the waste) because it is a decay chain daughter of Pu-239 and U-235.	None

* Information Category Codes: A = forms intended for use in waste certification, B = data from controlled databases and published documents, C = unpublished data, and D = interviews, memos, and letters

TWCP Record No.	Information Category Code	Information	Source	Summary	Limitations
TWCP-5165	D	Sources of Cs-137, Pa-231, and Cm-244 in TA-55 TRU waste	Interview with Jim Foxx (TA-55 SME) on April 11, 2001	Dominant source of Cs-137 expected to be due to residual contamination from original separation of Pu from production fuel. Cm-244 introduced in P/S code DOP starting in 1988, but could also show up after that date in IS, WE, CA and CF.	None
TWCP-5166	D	Secondary radionuclides used in P/S code PI	Interview with Jim Foxx (TA-55 SME) on April 11, 2001	Amendment of Foxx's 1997 memo (TWCP-882): P/S code PI was a user of U, Np and Am isotopes	None
TWCP-5169	D	Use of Kynar in TA-55 operations	Interview with Jim Foxx (TA-55 SME) on April 18, 2001	Aqueous chloride operations began lining each of their new gloveboxes with Kynar in 1988, finishing in 1992	None
TWCP-5173	A	Reconciliation between AK, VE and RTR data for drum from waste stream TA-55-19 (per Sampling Plan, R3)	LA01-VE-002	VE, AK and RTR data on WMC, number and types of packaging layers, TRUCON code, and waste items in drum	None
TWCP-5372	D	Appicability of P120 to waste generated by P/S codes SD and SS	Interview with Jim Foxx (TA-55 SME) on May 7, 2001	Vanadium pentoxide was used between February 1998 and June 1998. SME information indicates that waste from this work would have been packaged into containers that were closed by the end of December 1998.	None
TWCP-6988	B	Compilation of TA-55 waste generator information, for individual waste containers.	*Archived generator's databases 95DRUM and 95 ncdrum.*	Database of waste container identifiers, waste codes (e.g., IDC, RSWD, EPA HWNs), assay results, packaging dates, waste material content and generating processes for TA-55 wastes.	

* Information Category Codes: A = forms intended for use in waste certification, B = data from controlled databases and published documents, C = unpublished data, and D = interviews, memos, and letters

TWCP Record No.	Information Category Code	Information	Source	Summary	Limitations
TWCP-AK-2.1-003,R.2	B	Generators interview and TWCP AK references	*Process Acceptable Knowledge Summary Report for Metal Operations at TA-55*	Detailed information on each P/S code for metal operations at TA-55	None
TWCP-AK-2.1-004,R.2	B	Generators interview and TWCP AK references	*Process Acceptable Knowledge Summary Report for Miscellaneous Operations at TA-55*	Detailed information on each P/S code for miscellaneous operations at TA-55	None
TWCP-AK-2.1-005,R.2	B	Generators interview and TWCP AK references	*Process Acceptable Knowledge Summary Report for Nitrate Operations at TA-55*	Detailed information on each P/S code for nitrate operations at TA-55	None
TWCP-AK-2.1-006,R.2	B	Generators interview and TWCP AK references	*Process Acceptable Knowledge Summary Report for Pyrochemcial Processes at TA-55*	Detailed information on each P/S code for pyrochemical processes at TA-55	None
TWCP-AK-2.1-007,R.2	B	Generators interview and TWCP AK references	*Process Acceptable Knowledge Summary Report for Special Processing Operations at TA-55*	Detailed information on each P/S code for special processing operations at TA-55	None
TWCP-To Be Determined	A	RTR data for drums from waste stream TA-55-19 or TA-55-20	LA01-RTR-006	RTR data on prohibited items, WMC, packaging layers, and estimated volumes and weights of waste material parameters in drum	RTR batch data report was approved by project level, but is awaiting review and approval by CBFO

* Information Category Codes: A = forms intended for use in waste certification, B = data from controlled databases and published documents, C = unpublished data, and D = interviews, memos, and letters

TWCP Record No.	Information Category Code	Information	Source	Summary	Limitations
TWCP-To Be Determined	D	Time during which P120 is applicable to waste containers containing waste items generated under P/S codes SD and SS	Interview with Jim Foxx (TA-55 SME), May 7, 2001	It is a reasonable assumption that all waste from this set of experiments would have been sent to Room 432 and packaged into waste containers that were closed by the end of December 1998. The basis for this assumption is that accumulated waste items are required to be cleaned out of work areas (e.g., gloveboxes) in the Plutonium Facility twice a year, during the biannual inventory. In 1998 and 1999, the biannual inventories occurred in June and December.	None
TWCP-To Determined	A	Reconciliation between AK, VE and RTR data for drum from waste stream TA-55-20 (per Sampling Plan, R3)	LA00-3.4.1-005	VE, AK and RTR data on WMC, number and types of packaging layers, TRUCON code, and waste items in drum	VE batch data report still in Project-level review
TWCP-PLAN-0.2.7-001,R.3	C	LANL TA-55 waste management database, LANL TA-54 TRU waste management database, and TWCP AK references based on generator's original data	*Los Alamos National Laboratory Transuranic Waste Characterization Sampling Plan*	Detailed information on each waste drum and waste stream	Reliability and completeness of waste generator data is highly variable

* Information Category Codes: A = forms intended for use in waste certification, B = data from controlled databases and published documents, C = unpublished data, and D = interviews, memos, and letters

MAP OF LANL

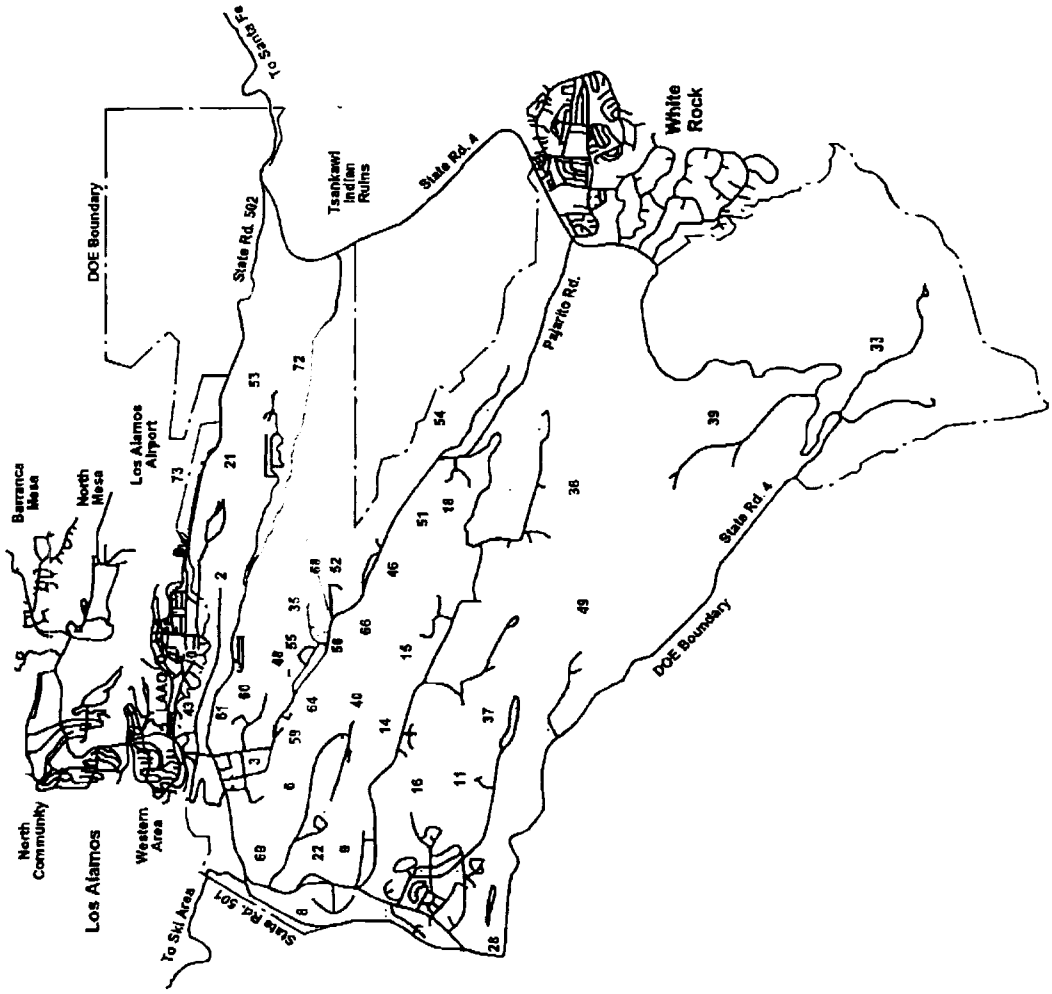

Technical Area Locations

TA-0	Unassigned Land Reserve
TA-2	Omega Site
TA-3	South Mesa Site
TA-5	Beta Site
TA-6	Two Mile Mesa Site
TA-8	Anchor Site West
TA-9	Anchor Site East
TA-11	K-Site
TA-14	Q-Site
TA-15	R-Site
TA-16	S-Site
TA-18	Pajarito Laboratory
TA-21	DP-Site
TA-22	TD-Site
TA-28	Magazine Area A
TA-33	HP-Site
TA-35	Ten Site
TA-36	Kappa Site
TA-37	Magazine Area C
TA-39	Ancho Canyon Site
TA-40	DF-Site
TA-41	W-Site
TA-43	Health Research Lab & DOE Headquarters
TA-46	WA-Site
TA-48	Radiochemistry Site
TA-49	Frijoles Mesa Site
TA-50	Waste Management Site
TA-51	Radiation Exposure Facility
TA-52	Reactor Development Site
TA-53	Meson Physics Facility
TA-54	Waste Disposal Site
TA-55	Plutonium Facility Site
TA-57	Fenton Hill Site
TA-58	Two Mile North Site
TA-59	OH-Site

MAP OF TA-55

Note: The Plutonium Facility, Building PF-4, is labeled PF-4 on this map.

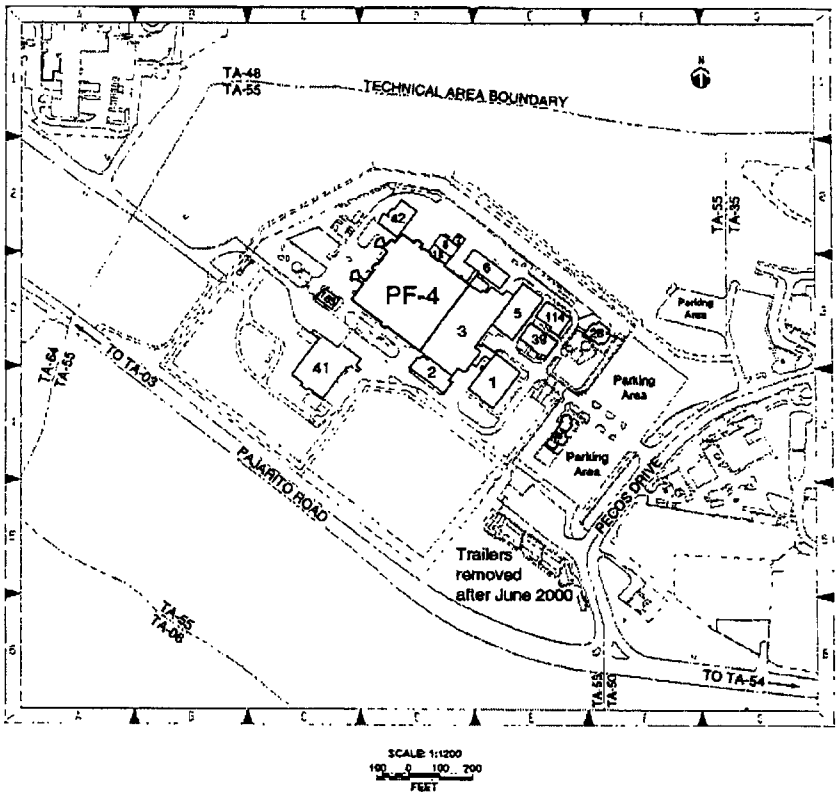

SIMPLIFIED PROCESS FLOW DIAGRAMS

SIMPLIFIED PROCESS FLOW DIAGRAM FOR CHLORIDE OPERATIONS

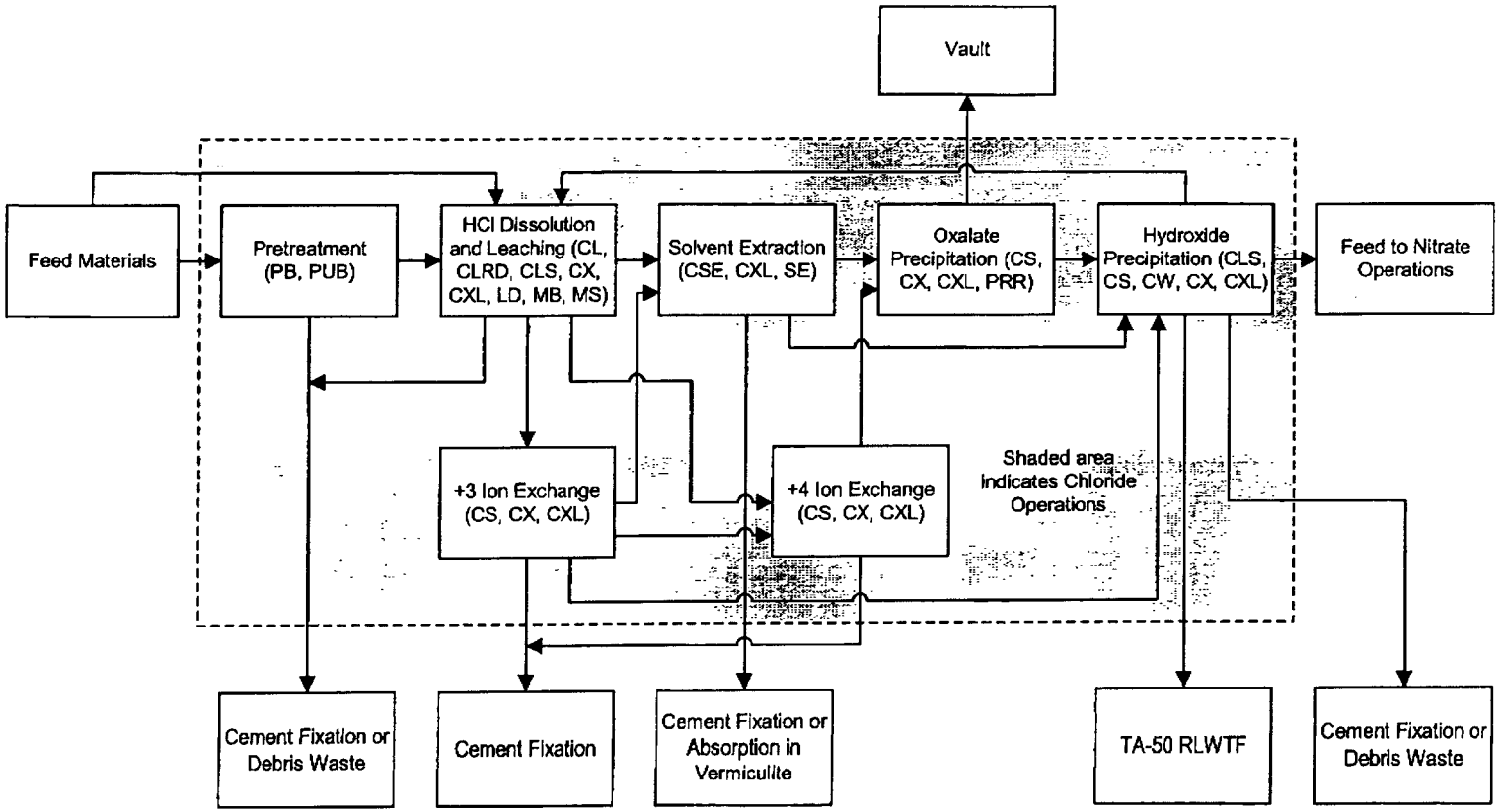

NOTE: Many of the P/S codes for chloride operations involve more than one step or activity in the process flow diagram. Thus, the same P/S code can appear in more than one box on the process flow diagram.

SIMPLIFIED PROCESS FLOW DIAGRAM FOR METAL OPERATIONS

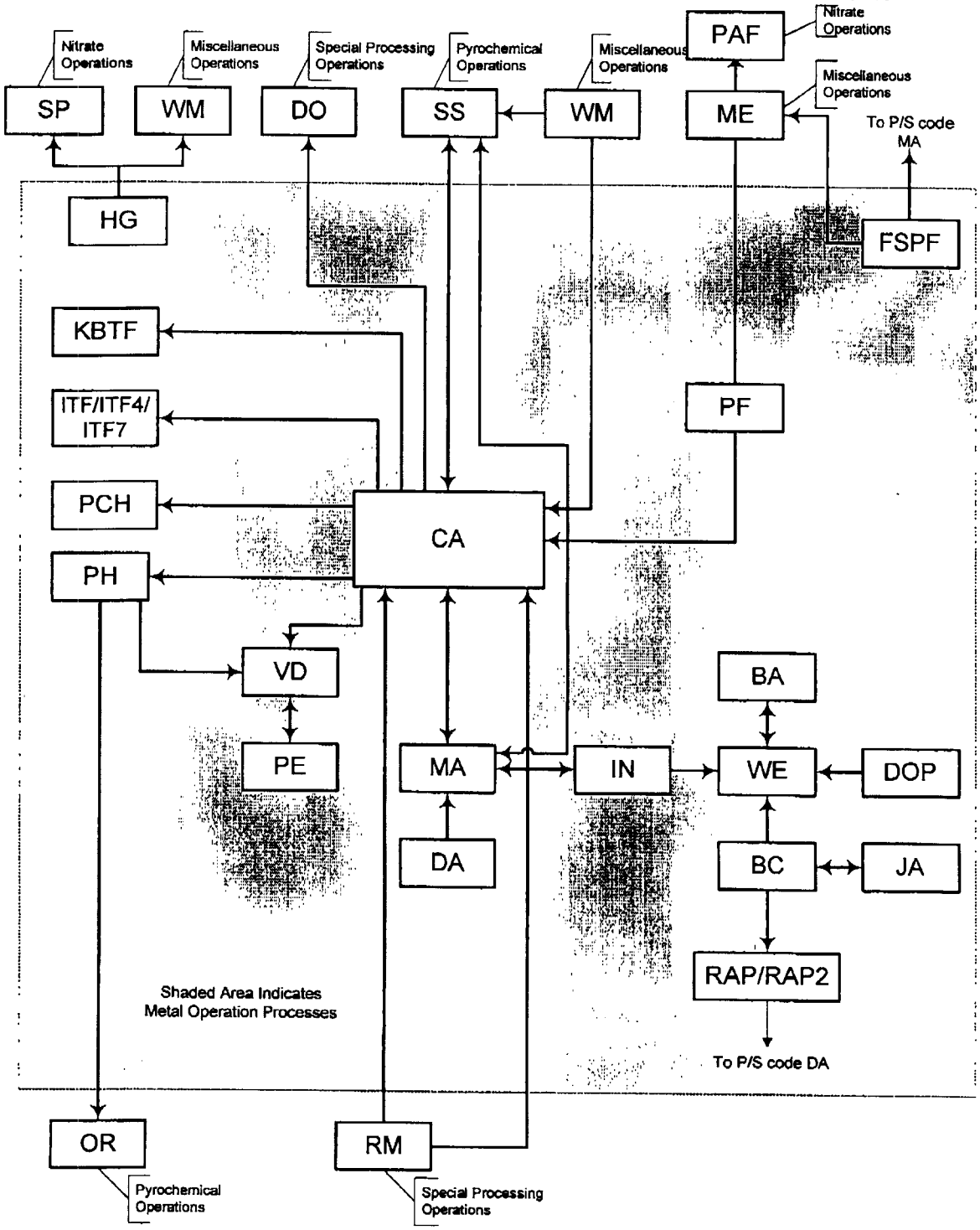

NOTE: All of these P/S codes may obtain feed material from or send product output to the vault.

SIMPLIFIED PROCESS FLOW DIAGRAM FOR METAL OPERATIONS (continued)

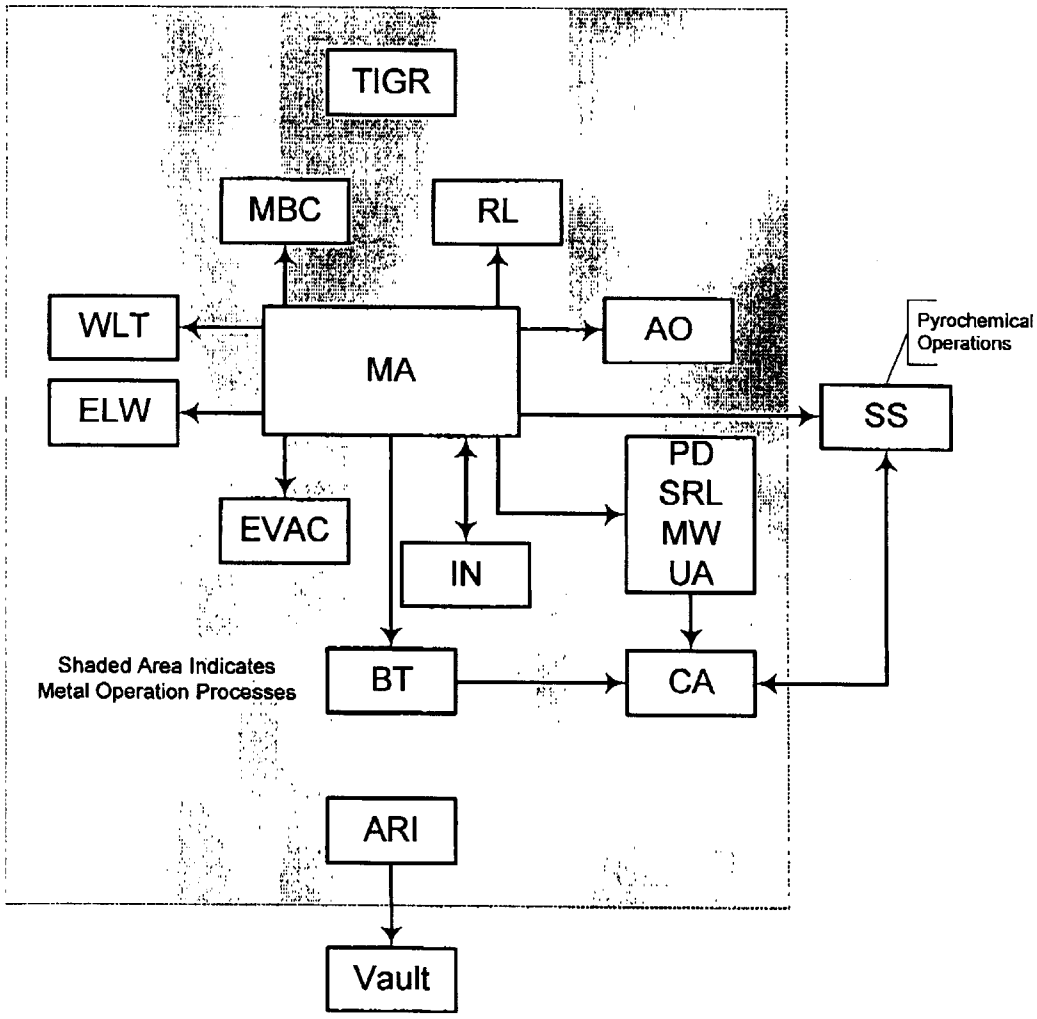

NOTE: All of these P/S codes may obtain feed material from or send product output to the vault.

NOTE: P/S code UA tracks uranium compounds from Pit Disassembly. Activities under this P/S code would be similar to those under P/S codes IN, MW, and WE.

SIMPLIFIED PROCESS FLOW DIAGRAM FOR METAL OPERATIONS (continued)

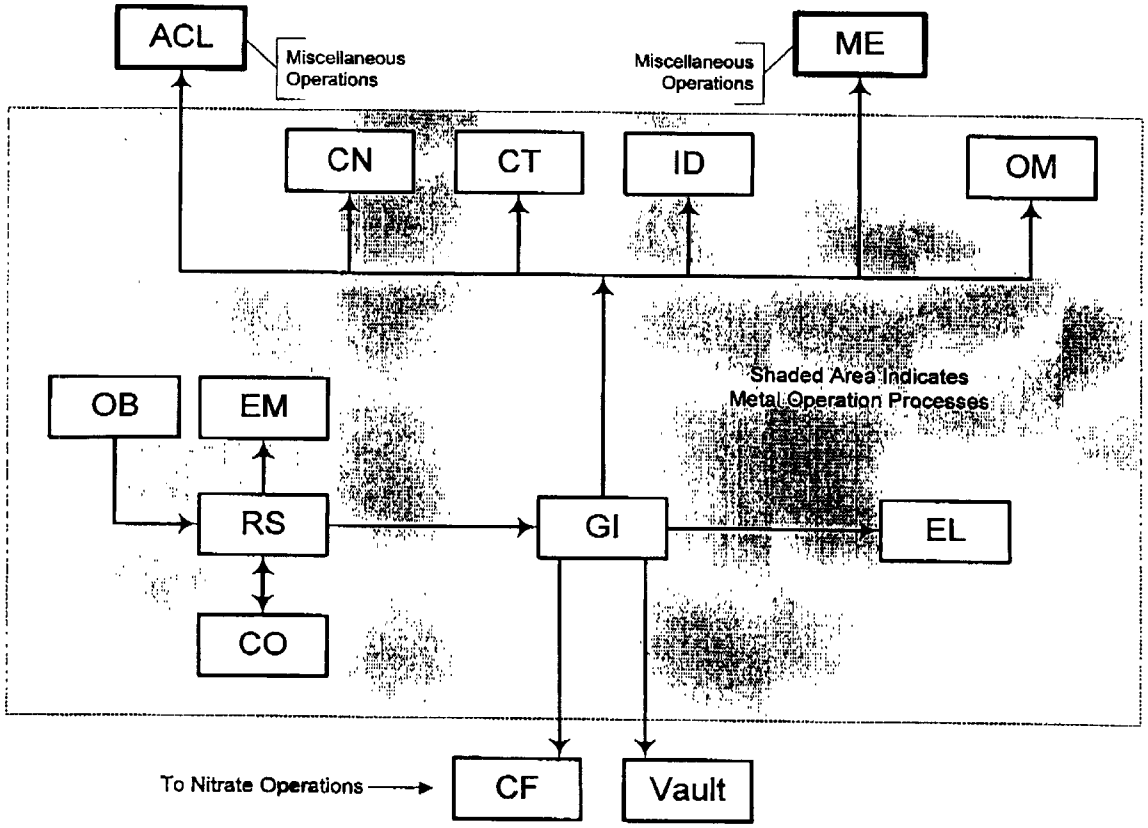

In 1988, P/S codes CO, GI, ID, OB, and RS were combined into P/S code FF. P/S codes CT, ID, and OM are status codes only, and probably do not generate TRU waste.

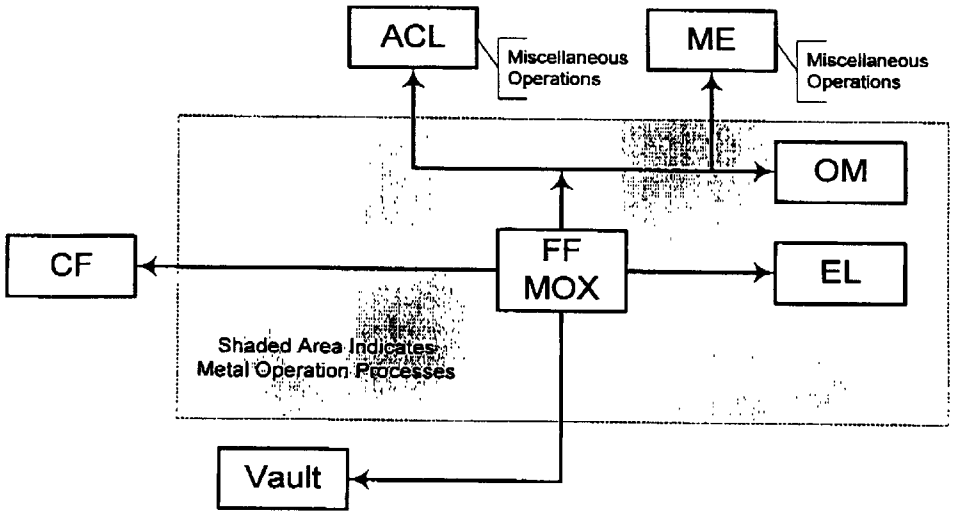

NOTE: All of these P/S codes may obtain feed material from or send product output to the vault.

SIMPLIFIED PROCESS FLOW DIAGRAM FOR MISCELLANEOUS OPERATIONS

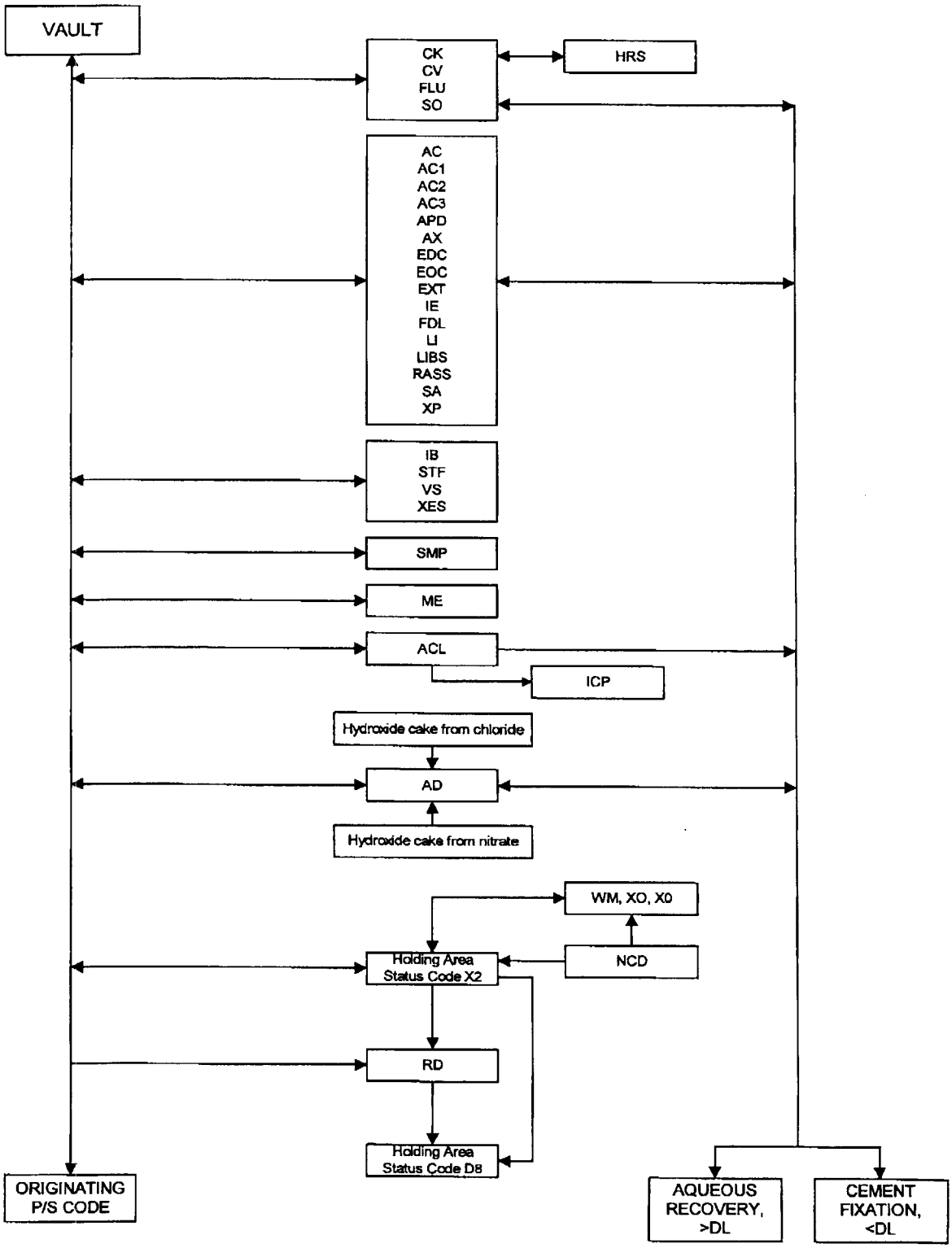

GENERALIZED PROCESS STATUS DIAGRAM FOR NITRATE PROCESSES

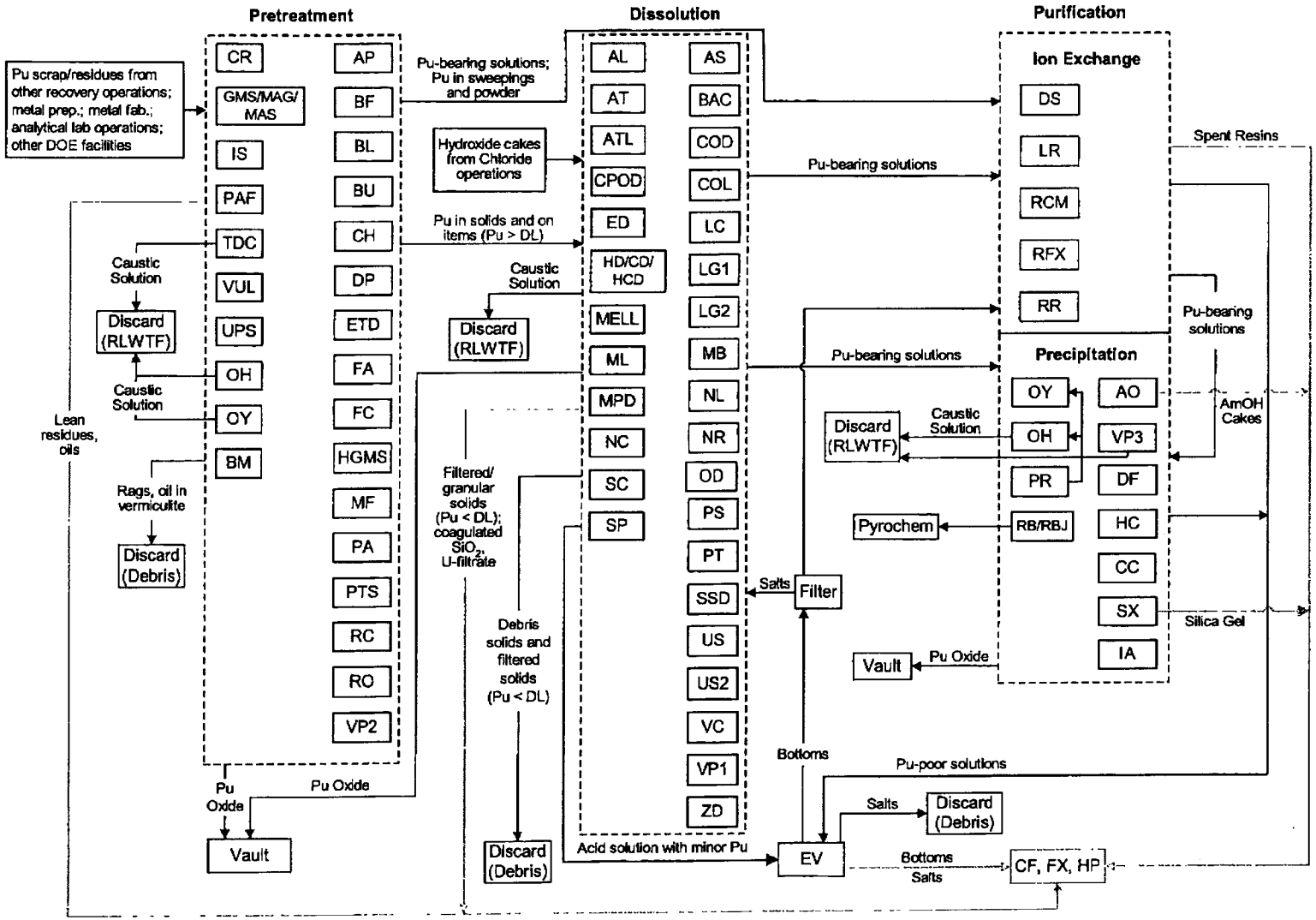

**SIMPLIFIED PROCESS FLOW DIAGRAM
FOR PYROCHEMICAL PROCESSES**

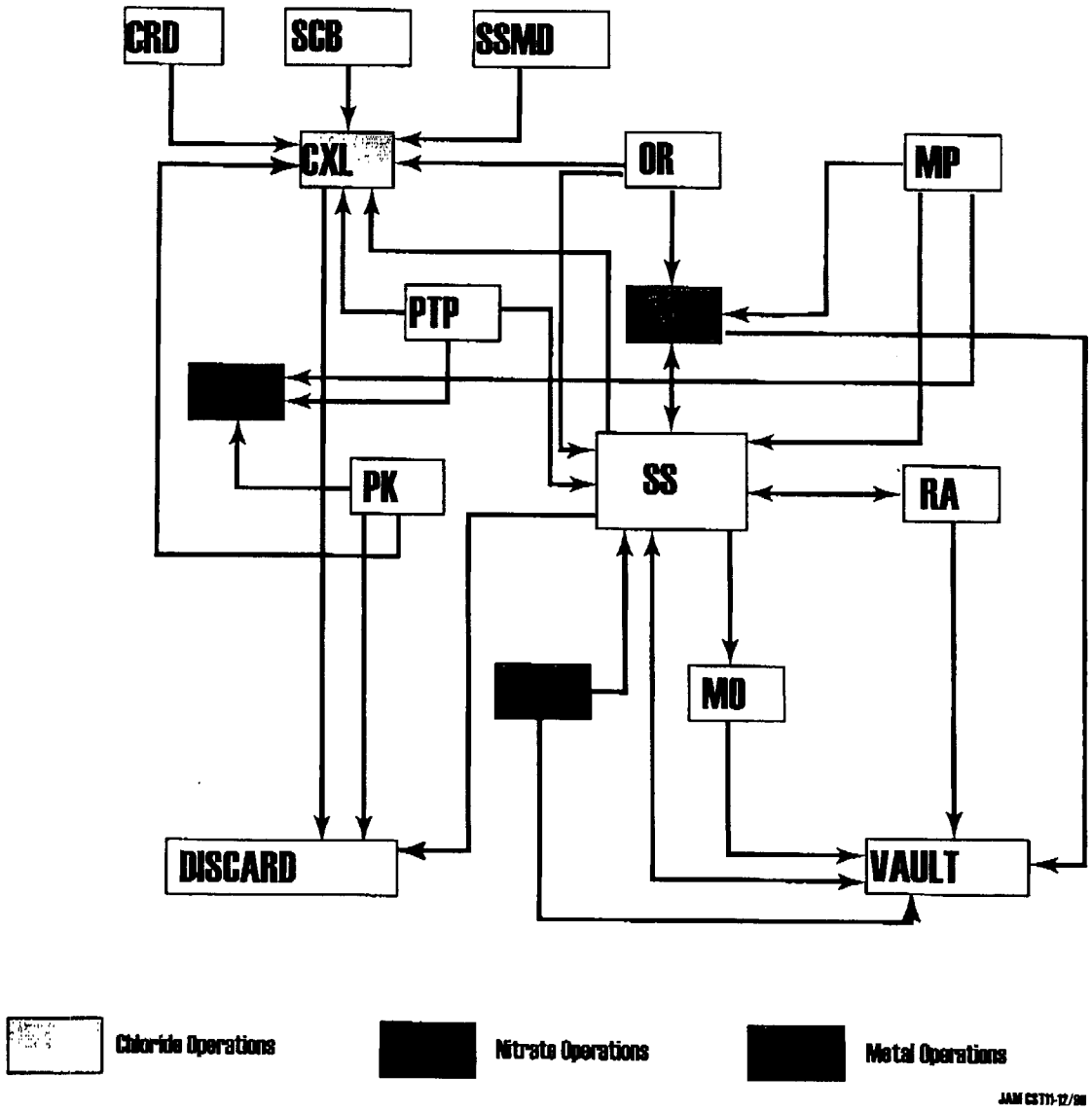

SIMPLIFIED PROCESS FLOW DIAGRAM

FOR SPECIAL PROCESSING

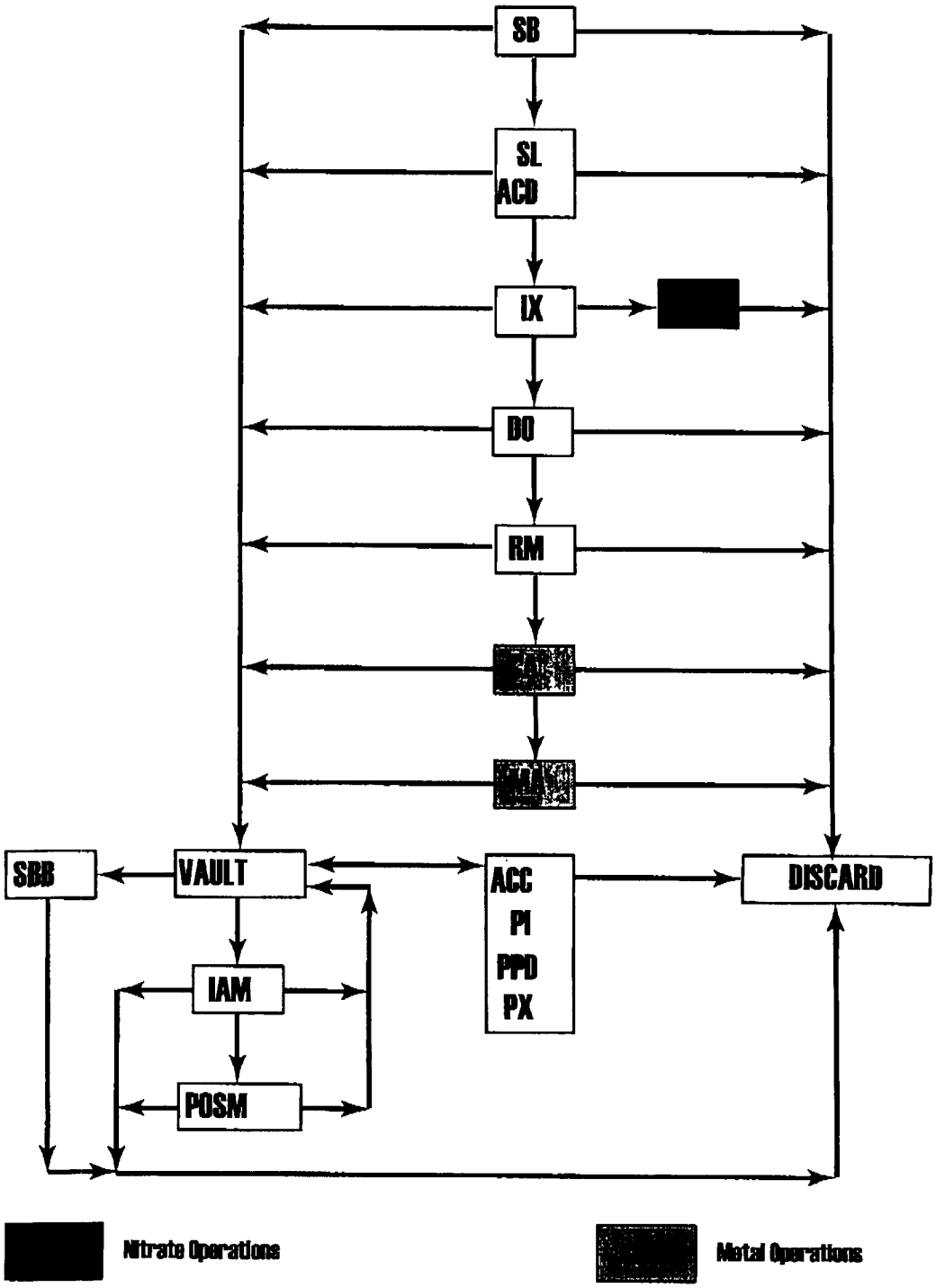

JAM CSTU-2/00

WASTE GENERATOR FORMS FOR TRU WASTE

Los Alamos
NATIONAL LABORATORY

TRU WASTE STORAGE RECORD

LA00000056636

1. GENERATOR'S PRE-USE VISUAL INSPECTION

Purchase Order #	Inspected Items		
This container has been visually inspected according to approved procedures and has been found to be free of damage that would make it unsuitable for TRU waste packaging.	[X] Ring, Bolt, and Nut	[X] Chime	[X] Dents
	[X] Lid and Gasket	[X] Gouges	[X] Paint
Name TRUJILLO MICHAEL C	Znumber 098605		Date JUL 30 1997

2. GENERATOR'S PACKAGE INFORMATION

Group NMT-7	Technical Area 55	Building PF-4	Program Code SJ0700 KF14 1000 0000	[ ] Off-Normal
Additional Information TRD B28672				

CONTAINER	LINER
[X] Steel Drum (55 gal.)	[X] None
[ ] Steel Drum (85 gal.)	[ ] 90 mil liner
[ ] Standard Waste Box	[ ] 125 mil liner
[ ] RH Canister	INTERNAL SHIELDING
[ ] Other (Call TWCO)	[X] None
[ ] Overpack	Type / Thickness (in.)
Carbon Filter ID 01 1578 / 02	

RADIONUCLIDE CONTENT			
Nuclide	Amount	Uncertainty	C = Curie M = Grams
PU-238	5.007E-3	5.136E-4	M
PU-239	5.633E+1	4.816E+0	M
PU-240	3.804E+0	3.062E-1	M
PU-241	1.201E-1	1.027E-2	M
PU-242	1.201E-2	1.027E-3	M
AM-241	9.551E-2	8.166E-3	M

Waste Profile Request Number	20309
Process Batch Code	NA
Gross Weight (lb.)	1.12E+2
Net Weight (lb.)	4.88E+1
Shipping Category	3003400280
LANL Waste Stream ID	TA-55-3
TRUCON Code	116C
Date Closed (MMDDYY)	AUG 4 1997

[ ] PDP Program Tracking No:

NONRADIOACTIVE HAZARDOUS MATERIALS		
Name	EPA Code	Quantity (g)
None		

Accumulation Start Date (MMDDYY)

The data in this section were collected, and the waste described herein was packaged and labeled according to approved procedures.

Name VIGIL ROBERT A | Znumber 091564 | Date AUG 11 1997

3. GENERATOR SITE HEALTH PHYSICS INFORMATION

		Survey Date	Survey Meter Model	Property Number	Calibration Due Date
Gamma Dose Rate (mrem/h) (contact)	8.0E+1	AUG 6 1997	RO2D	006467	SEP 13 1997
Neutron Dose Rate (mrem/h) (contact)	1.3E+0	AUG 6 1997	PNR-4	004906	OCT 2 1997
Total Dose Rate (mrem/h) (contact)	8.1E+1				
Total Dose Rate (mrem/h) (1 meter)	8.8E+0				
Alpha Contamination (dpm/100cm^2) (rem)	0.0E+0				
Beta-Gamma Cont. (dpm/100cm^2) (rem)	0.0E+0				

The data in this section were collected according to approved procedures.

Name CHAVEZ RONALD

Znumber 112026 | Date AUG 11 1997

Modifications to Computer Generated Data Invalidate this Form

Los Alamos
NATIONAL LABORATORY

DISCARDABLE WASTE LOG SHEET

LA00000056636

Item ID	Matrix	Pkg Wt (kg)	Qty	Volume (l)	MT	SNM(g)	Uncert(g)	Pa/Section/Ln Off Memo
CORRCXL6	Combustibles	6.03			S2	0.831	0.134	S14
PLSED3	Plastic	5.02			S2	20.315	1.055	B/17
PLSSC28	Plastic	11.06			S2	40.824	5.025	B/17

Total Pkg Wt (lbs)	48.72
Drum Tare (lbs)	62.78
Calc Gross Wt (lbs)	111.50
Meas Gross Wt (lbs)	111.60

MT	Total SNM	Total Uncert
S2	60.970	6.214

Printed AUG 28 97 11:36:48 by BUSTAMANTE J M

TRU Waste Origination & Disposition Information

Drum Id	Matrix				Date
COMCXL5	Combustibles				JUL 30 1997
Quantity / Gross Wt (kg)	Tare Wt	Net Wt (kg)	Volume (l)		Process Status
5.72		5.72			CXL
Generator			Cubicle	Room	Phone
ORTEGA JOSE D			108039	420	7-2575
Waste Process	Assay	Contents Info		Drum Id	
Solid Waste Processing	NDA Laboratory			LA00000056636	

Beryllium	NO	Explosives	NO	PCB's	
Compressed Gases	NO	Free Liquids	NO	Particulates	NO
Corrosive	NO	Hazardous		Pyrophorics	NO

Comments
Trash from hot job.

Assay Information

Isotope	MT	SNM (g)	Uncert (g)	Mcode	Limit	SNM (g)/unit	Date	By
PU-239	52	0.031	0.134	G05	4.30	0.010	JUL 31 1997	GUTIERREZ DARLENE D

Justification Memos

Memo ID
NONE

Hazardous Materials

EPA Code	Material	Wt (g)
NONE		

History

Date	Name	Event		Comments
JUL 30 1997	CHAVEZ RONALD G	CERTIFIED		
AUG 4 1997	VIGIL ROBERT A	PACKED	LA00000056636	

Printed AUG 29 97 11:38:44 by BUSTAMANTE J M

TRU Waste Origination & Disposition Information

Record	Matrix				Date
PLSED3	Plastic				JUL 30 1997
Quantity / Gross Wt (kg)	Tare Wt	Net Wt (kg)	Volume (l)		Process Status
3.18		3.18			ED
Generator			Zone/Bldg	Room	Phone
ROMERO JOE C			109702	401	7-2572
Waste Process		Ability	Container Type		Drum Id
Solid Waste Processing		NDA Laboratory			LA00000056636

Beryllium	NO	Explosives	NO	PCB's	
Compressed Gases	NO	Free Liquids	NO	Particulates	NO
Corrosive	NO	Hazardous		Pyrophorics	NO

Comments
PLASTICS FOR DISCARD

Assay Information

Isotope	MT	SNM (g)	Uncert (g)	Mcode	Limit	SNM (g)/unit	Date	By
PU-239	52	10.215	1.055	G05	16.00	3.210	JUL 31 1997	GUTIERREZ DARLENE D

Justification Memos

Memo ID
NONE

Hazardous Materials

EPA Code	Material	Wt (g)
NONE		

History

Date	Name	Event		Comments
JUL 30 1997	CHAVEZ RONALD G	CERTIFIED		
AUG 4 1997	VIGIL ROBERT A	PACKED	LA00000056636	

Printed AUG 29 97 11:38:44 by BUSTAMANTE J M

TRU Waste Origination & Disposition Information

Inventid	Matrix				Date
PLSSC28	Plastic				JUL 30 1997
Quantity / Gross Wt (kg)	Tare Wt	Net Wt (kg)	Volume (l)		Process Status
8.70		8.70			SC
Generator			Container	Room	Phone
LUJAN JOE E			083188	420	7-2575
Waste Process	Assay		Calibration Info		Drum Id
Solid Waste Processing	NDA Laboratory				LA00000056636

Beryllium	NO	Explosives	NO	PCB's	
Compressed Gases	NO	Free Liquids	NO	Particulates	NO
Corrosive	NO	Hazardous		Pyrophorics	NO

Comments

Assay Information

Isotope	MT	SNM (g)	Uncert (g)	Mcode	Limit	SNM (g)/unit	Date	By
PU-239	52	49.824	5.025	G05	16.00	5.730	JUL 31 1997	GUTIERREZ DARLENE D

Justification Memos

Memo ID
NONE

Hazardous Materials

EPA Code	Material	Wt (g)
NONE		

History

Date	Name	Event		Comments
JUL 3 1997	CHAVEZ RONALD G	CERTIFIED		
AUG 4 1997	VIGIL ROBERT A	PACKED	LA00000056636	

Printed AUG 29 97 11:38:45 by BUSTAMANTE J M

HEALTH·SAFETY·ENVIRONMENT FORM

LOS ALAMOS SCIENTIFIC LABORATORY

DATE

CHEMICAL WASTE DISPOSAL REQUEST

REQUESTED BY _____ PHONE _____

GROUP _____ LOCATION: TA-_____ BLDG. _____ AREA/WING _____ ROOM _____

WASTE VOLUME (ft^3) _____

NUMBER OF CONTAINERS (SIZE/TYPE) _____

WASTE FORM (check as appropriate):

☐ SOLID ☐ LIQUID ☐ GAS

COMMON NAMES OF CHEMICALS: _____

POTENTIAL HAZARDS (check as appropriate):

CORROSIVES ☐ Acids ____strong ____mild ____weak
☐ Bases ____strong ____mild ____weak

☐ FLAMMABLE ☐ TOXIC ☐ OTHER:
☐ EXPLOSIVE ☐ CARCINOGEN _____
☐ PYROPHORIC ☐ INFECTIOUS _____
☐ OIL ☐ UNKNOWN _____

CAN MATERIALS REACT VIOLENTLY WHEN EXPOSED TO:

AIR _____ WATER _____ OTHER CHEMICALS _____

If yes, give details: _____

OTHER USEFUL INFORMATION: _____

(TO BE COMPLETED BY H-7)

DISPOSAL RECORD

AREA _____ PIT/SHAFT _____ DATE _____ BY _____

MAIL THIS FORM TO WASTE MANAGEMENT, H-7, MS-~~[illegible]~~ 674

6/90

H&S 7-6A

DRUM LIST FOR WASTE STREAM LOT TA-55-19A

A review of TA-55 data bases of waste items packaged into drums (TWCP-5086) and the Sampling Plan (TWCP-PLAN-0.2.7-001,R.3) identified the following twelve 55-gallon drums that contained combustible debris generated by P/S codes SD and SS and that were closed between February 1, 1998 and December 31, 1998 (TWCP-5372).

Drum Identifier	P/S Codes of Waste Items (TWCP-5086)	Packaging Date (Sampling Plan,R.3)
LA00000056873	ED, RFX, SS, TDC	04/13/98
LA00000056876	CXL, ED, EV, ME, SS	05/12/98
LA00000056887	SS	06/09/98
LA00000056902	BC, MA, SS, TDC	09/29/98
LA00000056924	SS	07/13/98
LA00000056930	SS	08/17/98
LA00000057121	BM, FF, SS	08/31/98
LA00000057137	CXL, SS, TDC	09/29/98
LA00000057164	SS	10/28/98
LA00000057737	FF, SS	12/01/98
LA00000057755	ATL, BM, CXL, MA, SS, TIGR, XO	11/24/98
LA00000057766	SS	11/24/98

TWCP/WRR
Document Modification/Review Cycle

Revision of Document

☐ Revision
☒ Interim Change

Document ID: TWCP-AK-2.1-008,R.2/IC2 New Rev/IC: R2/IC2

Preparer: John Musgrave

Document Title:
Acceptable Knowledge Summary Report for Waste Streams TA-55-19 and TA-55-20

Blank entries are Not Applicable items.

- ☒ Procedure number verified
- ☒ Procedure Title verified
- ☒ Procedure Revision/IC verified
- ☒ Pagination verified
- ☒ Document Header verified
- ☒ Attachment Header verified
- ☒ Hazard Summary verified (if applicable)
- ☒ Effective/Review Date/LAUR# on cover page
- ☐ Copy of final to Training/Signature Copies
- ☒ Signatures and Dates typed on cover page
- ☒ Revision History table reflect changes and effective date
- ☒ Forms have been marked as SAMPLE
- ☒ Forms extracted for Web publishing
- ☒ Electronic files archived
- ☒ Diskette Prepared for Document Control
- ☒ Document Control packet contains signed original, diskette, DRR/Redline, review documentation

Document Tracking Closed ○ Open ◉ Closed Date to DC: 11/1/2001 Signed Initials: [illegible]

Document Control Management Responsibilities

Date Received: 11/2/01

- ☑ Verify Signatures
- ☑ Verify Effective Date cover/history
- ☑ Verify IC added to document (if applicable)
- ☑ Log into Database/Make Assignment
- ☑ Print Receipts/Cover sheets
- ☑ Copy document: 2
- ☑ Control Stations Updated - Date: 11/2/01
- ☑ Master Index Updated - Date: 11/2/01
- N/A Archive old revision (Record)

- ☑ Capture Document: ✓ Word __ PDF
- ☑ Forms: __ Yes ✓ No
- ☑ Transfer to Web Server
- ☑ Quality check to Original
- ☑ Verify Signatures ✓ Signature Dates ✓
- ☑ Dates: ✓ Cover ✓ Rev. History ✓ Review Date
- N/A Add: Controlled Document Original Signatures on File at the RMDC
- ☑ Security Set for: ____ Read Only
- ☑ Web Page TOC: ✓ No/Rev ✓ Effective Date N/A LAUR ✓ Title ✓ Link ✓ Test
- ☑ On-line test: ✓ Open Doc N/A Password
- ☑ Electronic Notification: ✓ Sent ✓ Printed
- N/A CAO: __ Electronic Copy __ Printed

Date Completed: 11/5/01 [illegible] Signed Initials: [illegible]

If pages are separated match to Document: TWCP-AK-2.1-008,R.2/IC2

TWCP/WRR
Document Modification/Review Cycle

☐ Revision
☒ Interim Change

Document ID: TWCP-AK-2.1-008,R.2/IC2 New Rev/IC: R2/IC2

Preparer: John Musgrave

Document Title:
Acceptable Knowledge Summary Report for Waste Streams TA-55-19 and TA-55-20

Blank entries are Not Applicable items.

- ☒ Procedure number verified
- ☒ Procedure Title verified
- ☒ Procedure Revision/IC verified
- ☒ Pagination verified
- ☒ Document Header verified
- ☒ Attachment Header verified
- ☒ Hazard Summary verified (if applicable)
- ☒ Effective/Review Date/LAUR# on cover page
- ☐ Copy of final to Training/Signature Copies
- ☒ Signatures and Dates typed on cover page
- ☒ Revision History table reflect changes and effective date
- ☒ Forms have been marked as SAMPLE
- ☒ Forms extracted for Web publishing
- ☒ Electronic files archived
- ☒ Diskette Prepared for Document Control
- ☒ Document Control packet contains signed original, diskette, DRR/Redline, review documentation

Document Tracking Closed ○ Open ● Closed Date to DC: 11/1/2001 Signed Initials: [illegible]

Date Received: 11/2/01

- ☑ Verify Signatures
- ☑ Verify Effective Date cover/history
- ☑ Verify IC added to document (if applicable)
- ☑ Log into Database/Make Assignment
- ☑ Print Receipts/Cover sheets
- ☑ Copy document: 2
- ☑ Control Stations Updated - Date: 11/2/01
- ☑ Master Index Updated - Date: 11/2/01
- N/A Archive old revision (Record)

- ☑ Capture Document: ✓ Word __ PDF
- ☑ Forms: __ Yes ✓ No
- ☑ Transfer to Web Server
- ☑ Quality check to Original
- ☑ Verify Signatures ✓ Signature Dates ✓
- ☑ Dates: ✓ Cover ✓ Rev. History ✓ Review Date
- N/A Add: Controlled Document Original Signatures on File at the RMDC
- ☑ Security Set for: ____ Read Only
- ☑ Web Page TOC: ✓ No/Rev ✓ Effective Date N/A LAUR ✓ Title ✓ Link __ Test
- ☑ On-line test: __ Open Doc N/A Password
- ☑ Electronic Notification: ✓ Sent ✓ Printed
- N/A CAO: __ Electronic Copy __ Printed

Date Completed: 11/5/01 (all [illegible]) Signed Initials: [illegible]

If pages are separated match to Document: TWCP-AK-2.1-008,R.2/IC2

TWCP WRR
Document Modification/Review Cycle

Status: ○ Open ◉ Closed ☐ Revision ☒ Interim Change

Date Received: 10/26/2001

Document ID: TWCP-AK-2.1-008,R.2/IC2

Current Rev/IC: R2/IC1

Document Title:

Rev/IC: R2/IC2

Acceptable Knowledge Summary Report for Waste Streams TA-55-19 and TA-55-20

Preparer: John Musgrave

Date to DP Team: 11/1/2001

Technical Reviewer:
(QA and Preparer)

Release for Review:

Comments:

☒ IC - Not Applicable

Reviewer	Name	Sent Out	Returned	Comments

Comments:

If pages are separated match to Document: TWCP-AK-2.1-008,R.2/IC2

Document Modification/Review Cycle

☒ IC - Not Applicable

Reviewer Comments Incorporated: ..... Comments:

Redline/DRR Given to Preparer: .....

Reconciled Comments Returned: .....

Modifications Made to Document: .....

Preparer Review of Modifications: .....

Signed/Release for Final Signature: .....

☒ IC - Not Applicable

Signature	Position	Sent Out	Returned	Comments

Comments:

Organization	Contact	Sent Out	Returned	Comments

Comments

X-Sender: 0c @empo.lanl.gov
X-Mailer: QUAL MM Windows Eudora Version 5.0
Date: Mon, 05 Nov 2001 13:12:11 -0700
To: Patricia G Patton <pgp@lanl.gov>
From: "Pamela Z. Rogers" <pzr@lanl.gov>
Subject: Re: Do AK reports need LAUR #
Cc: gavett@lanl.gov
X-RCPT-TO: <109592@empo.lanl.gov>

In general, an IC would need to go through classification before posting.

However, I have reviewed the content of both of these ICs, and all the material mentioned was obtained directly from various LANL web pages that are not classified nor UCNI. Therefore, since the information is already posted on the LANL web, it should not require another classification review to be posted on our internal-only web page.

At 09:33 AM 11/5/2001 -0700, you wrote:

> Good Morning Pam,
>
> I received AK-008/IC2 on Friday for posting to the web. Please let me know if this needs to go to classification for an LAUR number before posting.
>
> We also spoke earlier last week about AK-010/IC!, and you mention that it didn't need an LAUR number. Would you
> send me an email.
>
> Thanks, have a good day.
>
> --Patricia
>
> **~~**~~**~~**~~**~~**~~**~~**~~**~~**~~**
> ***Patricia G. Patton***
> Los Alamos National Laboratory
> E-ET / TWCP
> Records Management / Document Control
> (RMDC)
> 557 Oppenheimer
> TA-00 / bldg 764
> MS M319
> Phone: (505) 667-2071
> Email: pgp@lanl.gov
> **~~**~~**~~**~~**~~**~~**~~**~~**~~**~~**

To: rubyannf@lanl.gov, mlgarcia@lanl.gov
From: Patricia G Patton <pgp@lanl.gov>
Subject: For Training Distribution
Cc: fabi@lanl.gov
Bcc:
Attached:

I am sending this report you today, November 5, instead of the on the effective date because I was awaiting Pam's
response letting me know if this report needed to go to classification for an LAUR number before it went on the web,
I have since received her email.

The following is a revised AK report.

Effective Date: 11/2/01

TWCP-AK-2.1-008,R.2/IC2 - Acceptable Knowledge Summary Report for Waste Streams TA-55-19 and TA-55-20

~~~~**~~**~~**~~**~~**~~**~~**~~**~~**~~**~~**~~**

Patricia G. Patton

Los Alamos National Laboratory
E-ET
Records Management / Document Control
(RMDC)
TA-0
557 Oppenheimer Building 764
Phone: (505) 667-2071
Email: pgp@lanl.gov

~~~~**~~**~~**~~**~~**~~**~~**~~**~~**~~**~~**~~**

Document Modification/Review Cycle

☐ Revision
☒ Interim Change

Document ID: TWCP-AK-2.1-008 New Rev/IC: R.2/IC1

Preparer: John Musgrave

Document Title:
Acceptable Knowledge Summary Report for Waste Streams TA-55-19 and TA-55-20

Blank entries are Not Applicable items.

- ☒ Procedure number verified
- ☒ Procedure Title verified
- ☒ Procedure Revision/IC verified
- ☒ Pagination verified
- ☒ Document Header verified
- ☒ Attachment Header verified
- ☐ Hazard Summary verified (if applicable)
- ☒ Effective/Review Date/LAUR# on cover page
- ☐ Copy of final to Training/Signature Copies
- ☒ Signatures and Dates typed on cover page
- ☒ Revision History table reflect changes and effective date
- ☐ Forms have been marked as SAMPLE
- ☐ Forms extracted for Web publishing
- ☒ Electronic files archived
- ☒ Diskette Prepared for Document Control
- ☒ Document Control packet contains signed original, diskette, DRR/Redline, review documentation

Document Tracking Closed ○ Open ◉ Closed Date to DC: 7/25/2001 Signed Initials: JJS

Date Received: _____

- ☑ Verify Signatures
- ☑ Verify Effective Date cover/history
- ☑ Verify IC added to document (if applicable)
- ☑ Log into Database/Make Assignment
- ☑ Print Receipts/Cover sheets
- ☑ Copy document: 2
- ☑ Control Stations Updated - Date: 7/26/01
- ☑ Master Index Updated - Date: 7/26/01
- ☑ N/A Archive old revision (Record)

- ☑ Capture Document: ✓ Word ✓ PDF
- ☑ Forms: __ Yes ✓ No
- ☑ Transfer to Web Server
- ☑ Quality check to Original
- ☑ Verify Signatures ✓ Signature Dates ✓
- ☑ Dates: ✓ Cover ✓ Rev. History ✓ Review Date
- N/A Add: Controlled Document Original Signatures on File at the RMDC
- ☑ N/A Security Set for: ____ Read Only
- ☑ Web Page TOC: ✓ No/Rev ✓ Effective Date N/A LAUR ✓ Title ✓ Link ✓ Test
- ☑ On-line test: __ Open Doc N/A Password
- ☑ Electronic Notification: __ Sent ✓ Printed
- ☑ CAO: ✓ Electronic Copy ✓ Printed

Date Completed: 7/26/01 Signed Initials: [illegible]

If pages are separated match to Document: TWCP-AK-2.1-008

TWCP/WRR
Document Modification/Review Cycle

Status: ○ Open ◉ Closed ☐ Revision ☒ Interim Change

Date Received: 5/15/2001

Current Rev/IC: R.2

Document ID: TWCP-AK-2.1-008

Rev/IC: R.2/IC1

Document Title:
Acceptable Knowledge Summary Report for Waste Streams TA-55-19 and TA-55-20

Preparer: John Musgrave

Date to DP Team: 5/15/2001

Technical Reviewer:
(QA and Preparer)

Release for Review:

Comments:
05/15/01: Incorporated changes and sent to CBFO for approval.
07/16/01: CBFO will no longer review AK documents.

☒ IC - Not Applicable

Reviewer	Name	Sent Out	Returned	Comments

Comments:

If pages are separated match to Document: TWCP-AK-2.1-008

TWCP/WRR
Document Modification/Review Cycle

☒ IC - Not Applicable

Reviewer Comments Incorporated: ..... Comments:

Redline/DRR Given to Preparer: .....

Reconciled Comments Returned: .....

Modifications Made to Document: .....

Preparer Review of Modifications: .....

Signed/Release for Final Signature: .....

☒ IC - Not Applicable

Signature	Position	Sent Out	Returned	Comments

Comments:

Organization	Contact	Sent Out	Returned	Comments
CAO	W. Ledford	5/15/2001	7/16/2001	

Comments

"LANL will not be getting any comments on that document."

If pages are separated match to Document: TWCP-AK-2.1-008

To: Earl.Bradford@wipp.carlsbad.nm.us, TBowden@wipp.carlsbad.nm.us
From: Louise Garcia <louise@lanl.gov>
Subject: TWCP-AK-2.1-008,R2/IC1
Cc:
Bcc:
Attached: P:\WasteStreams55-19&55-20\TWCP-AK-2^1-008R2IC1.doc;

The following AK Report has been approved and is being sent to you for adequacy review.

Acceptable Knowledge Summary Report for Waste Stream TA-55-19 and TA-55-20 (TWCP-AK-2.1-008,R2/IC1)

The Report will be released for use once you have approved it via email.

Tammy,

Is Earl's e-mail address correct? Should there be anyone else that should be receiving documents for adequacy review? Let me know. Thanks

X-Server-Uuid: 5df9e970-eedf-11d3-844e-0008c7569817
From: "Ledford, Wayne - CTAC" <Wayne.Ledford@wipp.carlsbad.nm.us>
To: "'Jim Bailey'" <154344@empo.lanl.gov>
cc: "'Larry Souza'" <souza@lanl.gov>,
"'Marji Gavett, CST-7, 5-5392'" <gavett@lanl.gov>
Subject: Procedure Status
Date: Mon, 16 Jul 2001 15:59:24 -0600
X-Mailer: Internet Mail Service (5.5.2650.21)
X-WSS-ID: 174DBB8F110300-01-01
X-RCPT-TO: <154344@empo.lanl.gov>

Would you send another copy of TWCP-DTP-1.2-014, Rev. 8 to me and T. Bowden? It may have been lost in the transition. I'll get it reviewed as quickly as possible.

TWCP-AK-2.1-008, the AK summary report. LANL will not be getting any comments on that document. We normally don't review revisions to AK Summary documents because it is an output of your approved program and processes (kind of like a batch data report). If there is a concern with some specific aspect of that revision that you would like us to look at, please let me know.

TWCP-DTP-1.2-056, R. 4 and 006, R6, IC3 have been sent to Dorothy Gill for review.

THANKS

To: rubyannf@lanl.gov, mlgarcia@lanl.gov
From: Patricia G Patton <pgp@lanl.gov>
Subject: For Training Distribution
Cc: fabi@lanl.gov
Bcc:
Attached:

The following is a revised procedure.

TWCP-AK-2.1-008,R.2/IC1 - Acceptable Knowledge Summary Report for Waste Streams TA-55-19 AND ta-55-20

To: wipp.notify@wipp.carlsbad.nm.us
From: Patricia G Patton <pgp@lanl.gov>
Subject: [Procedure]
Cc: Tammy.Bowden@wipp.carlsbad.nm.us
Bcc: fl@lanl.gov
Attached: \\twcp-web\Pages\twcp\RMDC\AK\TWCP-AK-2.1-008\TWCP-AK-2.1-008,R.2_IC1.pdf;

The following is a revised procedure.

TWCP-AK-2.1-008,R.2/IC1 - Acceptable Knowledge Summary Report for Waste Streams TA-55-19 AND TA-55-20

LOS ALAMOS
NATIONAL LABORATORY - TWCP RMDC

Controlled Document Acknowledgment

Failure to return receipt by response date may result in removal from Distribution and/or placement on Supervised Work Activities for reciepients who are overseeing or performing work to this document.

Please Sign, Fold, and Return this Form

To: TWCP RMDC **Mail Stop: M 319** **Please Respond 8/9/2001**

TWCP-AK-2.1-008,R.2/IC1

Effective Date 7-26-2001 **Doc_Source** AK **Doc_Status** FINAL **Entry No**

Document Title ACCEPTABLE KNOWLEDGE SUMMARY REPORT FOR WASTE STREAM TA-55-19 AND TA-55-20 (LA-UR-01-2486)

Document Comments

Work Stations	ID_No	Name	MS	Organization	Copy
☒ RMDC	N/A	?	?	?	
☐ WCRRF					
☐ RAMROD					
☐ RANT					
☐ DECON					
☒ QA					

Action Required:

Please sign receipt and return to **RMDC, M 319**. My Signature on this Form verifies that I have Received this Document.

___ Please remove me from the Controlled Distribution List. Since the contents of this document does not apply to our operation the document is being returned. (Not applicable for Controlled Stations)

To be signed by the Controlled Document Recipient or their designee.

Signature: _____ Date: 7/26/01

TWCP/WRR
Document Modification/Review Cycle

[redacted]

☒ Revision
☐ Interim Change

Document ID: TWCP-AK-2.1-008,R.2 New Rev/IC: R.2

Preparer: John Musgrave

Document Title:
Acceptable Knowledge Summary Report for Waste Streams TA-55-19 and TA-55-20

Blank entries are Not Applicable items.

- ☒ Procedure number verified
- ☒ Procedure Title verified
- ☒ Procedure Revision/IC verified
- ☒ Pagination verified
- ☒ Document Header verified
- ☐ Attachment Header verified
- ☐ Hazard Summary verified (if applicable)
- ☒ Effective/Review Date/LAUR# on cover page
- ☒ Copy of final to Training/Signature Copies
- ☒ Signatures and Dates typed on cover page
- ☒ Revision History table reflect changes and effective date
- ☐ Forms have been marked as SAMPLE
- ☐ Forms extracted for Web publishing
- ☒ Electronic files archived
- ☒ Diskette Prepared for Document Control
- ☒ Document Control packet contains signed original, diskette, DRR/Redline, review documentation

Document Tracking Closed ○ Open ◉ Closed Date to DC: 5/15/2001 Signed Initials: JJ

[redacted] Date Received: 5/15/01

- ☑ Verify Signatures
- ☑ Verify Effective Date cover/history
- NA Verify IC added to document (if applicable)
- ☑ Log into Database/Make Assignment
- ☑ Print Receipts/Cover sheets
- ☑ Copy document: 4
- ☑ Control Stations Updated - Date: 5/16/01
- ☑ Master Index Updated - Date: 5/16/01
- ☑ Archive old revision (Record)

- ☑ Capture Document: __ Word ✓ PDF
- ☑ Forms: __ Yes ✓ No
- ☑ Transfer to Web Server
- ☑ Quality check to Original
- ☑ Verify Signatures ✓ Signature Dates ✓
- ☑ Dates: ✓ Cover ✓ Rev. History ✓ Review Date
- NA Add: Controlled Document Original Signatures on File at the RMDC
- NA Security Set for: ___ Read Only
- ☑ Web Page TOC: ✓ No/Rev ✓ Effective Date NA LAUR ✓ Title ✓ Link ✓ Test
- ☑ On-line test: ✓ Open Doc NA Password
- ☑ Electronic Notification: ✓ Sent ✓ Printed
- ☑ CAO: ✓ Electronic Copy ✓ Printed

[redacted] Date Completed: 5/16/01 [redacted] Initials: JJ

If pages are separated match to Document: TWCP-AK-2.1-008,R.2

TWCP/WRR
Document Modification/Review Cycle

☐ IC - Not Applicable

		Comments:
Reviewer Comments Incorporated:		
Redline/DRR Given to Preparer:		
Reconciled Comments Returned:		
Modifications Made to Document:		
Preparer Review of Modifications:		
Signed/Release for Final Signature:		

☐ IC - Not Applicable

Signature	Position	Sent Out	Returned	Comments
J. Musgrave			5/7/2001	
J. Fabryka-Martin	SPM		5/7/2001	
M. Lin	SPM		5/10/2001	
S. Wander			5/11/2001	
M. Gavett	QA		5/14/2001	
C. Foxx			5/7/2001	

Comments:

Organization	Contact	Sent Out	Returned	Comments

Comments

TWCP/WRR
Document Modification/Review Cycle

Status: ○ Open ◉ Closed ☒ Revision ☐ Interim Change

Date Received: 3/1/2001

Current Rev/IC: R.1/IC1

Document ID: TWCP-AK-2.1-008,R.2

Rev/IC: R.2

Document Title:
Acceptable Knowledge Summary Report for Waste Streams TA-55-19 and TA-55-20

Preparer: John Musgrave

Date to DP Team: 3/12/2001

Technical Reviewer:
(QA and Preparer)

Release for Review:

Comments:
Jim incorporated all comments.

☐ IC - Not Applicable

Reviewer	Name	Sent Out	Returned	Comments

Comments:

If pages are separated match to Document: TWCP-AK-2.1-008,R.2

LOS ALAMOS
NATIONAL LABORATORY - TWCP RMDC

Controlled Document Acknowledgment

Failure to return receipt by response date may result in removal from Distribution and/or placement on Supervised Work Activities for reciepients who are overseeing or performing work to this document.

Please Sign, Fold, and Return this Form

To: **CST-7 RMDC** Mail Stop: **E517** Please Respond By: **5/29/2001**

TWCP-AK-2.1-008,R.2

Effective Date 5-14-2001 **Doc_Source** TWCP **Doc_Status** FINAL **Entry No**

Document Title ACCEPTABLE KNOWLEDGE SUMMARY REPORT FOR WASTE STREAM TA-55-19 AND TA-55-20

Document Comments

Work Stations	ID_No	Name	MS	Organization	Copy
☒ RMDC ✓	N/A	?	?	?	
☒ WCRRF ✓					
☒ RAMROD ✓					
☒ RANT ✓					
☐ DECON					
☐ QA					

Action Required:

Please sign receipt and return to **RMDC, E517**. My Signature on this Form verifies that I have Received this Document.

___ Please remove me from the Controlled Distribution List. Since the contents of this document does not apply to our operation the document is being returned. (Not applicable for Controlled Stations)

To be signed by the Controlled Document Recipient or their designee.

Signature: Louise Garcia Date: 5/16/01

To: rubyannf@lanl.gov, mlgarcia@lanl.gov, prmtz@lanl.gov
From: Louise Garcia <louise@lanl.gov>
Subject: For Training Distribution
Cc: fl@lanl.gov, manmtz@lanl.gov
Bcc:
Attached:

The following is a revised AK Report.

TWCP-AK-2.1-008,R.2 - Acceptable Knowledge Summary Report for Waste Stream TA-55-19 and TA-55-20

To: wipp.notify@wipp.carlsbad.nm.us
From: Louise Garcia <louise@lanl.gov>
Subject: [Procedure]
Cc: Tammy.Bowden@wipp.carlsbad.nm.us
Bcc: fl@lanl.gov
Attached: K:\twcp\RMDC\AK\TWCP-AK-2.1-008\TWCP-AK-2^1-008R2.pdf;

The following is a revised AK Report.

TWCP-AK-2.1-008,R.2 - Acceptable Knowledge Summary Report for Waste Stream TA-55-19 and TA-55-20

4/30/01 DRAFT #~~9~~ 10

TA-55 PLUTONIUM FACILITY
ACCEPTABLE KNOWLEDGE REPORT

REPORT TITLE: Acceptable Knowledge Summary Report for Waste Streams TA-55-19 and TA-55-20

REPORT NUMBER: TWCP-AK-2.1-008,R.2 (LA-UR-00-5727)

WASTE GENERATED FROM WASTE STREAMS: TA-55-19, Lot TA-55-19A, and TA-55-20

EFFECTIVE DATE: _____

NEXT REVIEW DATE: _____

DOCUMENT PREPARER:

_____ _____
JOHN MUSGRAVE DATE

APPROVALS:

_____ _____
INDEPENDENT TECHNICAL REVIEWER/EDITOR DATE

_____ _____
SITE PROJECT MANAGER DATE

_____ _____
WASTE CERTIFICATION OFFICIAL DATE

_____ _____
SITE PROJECT QA OFFICER DATE

_____ _____
FACILITY REPRESENTATIVE DATE

© 2000, 2001 University of California

P/S Code	P/S Name	AK Process Report and Primary Report Section in which P/S Code is Described*		RCRA Listings for Combustible Debris
OM	Oxygen to metal ratio determination	Metal Operation Processes	3.4.1, Att. 4	
OR	Direct oxide reduction	Pyrochemical Processes	3.4.2, Att. 4	
OY	Oxalate precipitation	Nitrate Operations	3.4.1, 3.4.3, Att. 4	
PA	Passivation	Nitrate Operations	3.4.1, 3.4.6, Att. 4	
PAF	Passivation furnaces	Nitrate Operations	3.4.1, Att. 4	
PB	Pu-beryllium source recovery	Chloride Operations	3.4.1, Att. 4	D007, D008, D009
PCH	Plasma chemistry	Metal Operation Processes	3.4.2, Att. 4	D007
PD	Pit disassembly	Metal Operation Processes	3.4.2, Att. 4	
PE	Sputtering process	Metal Operation Processes	3.4.2, Att. 4	D004
PF	Plutonium surfaces	Metal Operation Processes	3.4.2, Att. 4	
PH	Thermal hydride/dehydride	Metal Operation Processes	3.4.2, Att. 4	
PI	Preparation of isotopes	Special Processing	3.4.4, Att. 4	
PIG	Welding	Metal Operation Processes	3.4.3, Att. 4	
PK	Pickling and nitrate holding	Pyrochemical Processes	3.4.11, Att. 4	D006, D007, D008, D011
POSM	Processing out-of-specification material	Special Processing	3.4.3, Att. 4	D007, D011
PPD	Pu pellet dissolution	Special Processing	3.4.11, Att. 4	
PR	Peroxide precipitation	Nitrate Operations	3.4.3, Att. 4	
PRR	Pyrochemical residue recovery	Chloride Operations	3.4.3, 3.4.4, Att. 4	D007, D009
PS	Peroxide precipitation of MSE salts	Nitrate Operations	3.4.2, 3.4.6, Att. 4	
PT	Plutonium-thorium separation	Nitrate Operations	3.4.2, 3.4.6, Att. 4	D007
PTP	Plutonium trichloride preparation	Pyrochemical Processes	3.4.12, Att. 4	D019
PTS	RD&D pretreatment study	Nitrate Operations	3.4.1, 3.4.6, Att. 4	D005, D006, D007, D008, D011
PUB	Pu/Be source recovery	Chloride Operations	3.4.1, Att. 4	D007, D008, D009
PX	Pyrochemical R&D	Special Processing	3.4.6, 3.4.7, 3.4.8, 3.4.9, 3.4.10, Att. 4	D006, D008, D019
RA	Recovery of anodes	Pyrochemical Processes	3.4.6, Att. 4	~~D005~~
RAP	Research alloy preparation	Metal Operation Processes	3.4.3, Att. 4	
RAP2	Research alloy preparation	Metal Operation Processes	3.4.3, Att. 4	
RASS/RSS	Raman spectroscopy system	Miscellaneous Operations	3.4.5, Att. 4	D004, D005, D006, D007, D008, D009, D010, D011, D019
RB	Roasting and blending	Nitrate Operations	3.4.3, Att. 4	

- Drums containing waste generated from P/S codes SD and SS between 02/98 and 06/98 are segregated as a subset of TA-55-19 due to the potential presence of vanadium pentoxide (EPA HWN P120). (See separate AK summary for waste stream lot TA-55-19A).

Radionuclide Content

These waste streams predominantly contain a variety of plutonium material types with different well-defined isotopic compositions. Americium-241, neptunium-237, ~~protactinium-231~~ and uranium-234 may be present at detectable concentrations as decay products of their plutonium precursors. Some of the processes separate plutonium from americium and uranium. The waste will usually be enriched in americium-241 and uranium-234 relative to plutonium, but may also be depleted in some cases. Some waste may contain uranium and its decay products (e.g., uranium-234) from one of several uranium material types used as feed material. In addition, trace levels of cesium-137 may be present because this fission product was not completely separated from plutonium during Purex processing at other DOE sites. Other waste may contain various radionuclides used as feed materials for producing detector materials, including americium-241, americium-243, cerium-144, curium-244, protactinium-231, neptunium-237, thorium-232, thorium-232 enriched in thorium-230, uranium-233, and depleted uranium.

Primary References for Documentation of Acceptable Knowledge

Process Acceptable Knowledge Summary Report for Chloride Operations at TA-55 (TWCP-AK-2.1-002)

Process Acceptable Knowledge Summary Report for Metal Operation Processes at TA-55 (TWCP-AK-2.1-003)

Process Acceptable Knowledge Summary Report for Miscellaneous Operations at TA-55 (TWCP-AK-2.1-004)

Process Acceptable Knowledge Summary Report for Nitrate Operations at TA-55 (TWCP-AK-2.1-005)

Process Acceptable Knowledge Summary Report for Pyrochemical Processes at TA-55 (TWCP-AK-2.1-006)

Process Acceptable Knowledge Summary Report for Special Processing at TA-55 (TWCP-AK-2.1-007)

- D004, D005, D006, D007, D008, D009, D010, D011, D018, D019, D021, D022, D035, D038, D039, D040
- P120
- Drums containing waste from P/S codes AC, AC2, and SA are segregated from this waste stream lot until the potential applicability of HWN U213 has been resolved.

Radionuclide Content

These waste streams predominantly contain a variety of plutonium material types with different well-defined isotopic compositions. Americium-241, neptunium-237, ~~protactinium-231~~ and uranium-234 may be present at detectable concentrations as decay products of their plutonium precursors. Some of the processes separate plutonium from americium and uranium. The waste will usually be enriched in americium-241 and uranium-234 relative to plutonium, but may also be depleted in some cases. Some waste may contain uranium and its decay products (e.g., uranium-234) from one of several uranium material types used as feed material. In addition, trace levels of cesium-137 may be present because this fission product was not completely separated from plutonium during Purex processing at other DOE sites. Other waste may contain various radionuclides used as feed materials for producing detector materials, including americium-241, americium-243, cerium-144, curium-244, protactinium-231, neptunium-237, thorium-232, thorium-232 enriched in thorium-230, uranium-233, and depleted uranium.**Primary References for Documentation of Acceptable Knowledge**

Process Acceptable Knowledge Summary Report for Chloride Operations at TA-55 (TWCP-AK-2.1-002)

Process Acceptable Knowledge Summary Report for Metal Operation Processes at TA-55 (TWCP-AK-2.1-003)

Process Acceptable Knowledge Summary Report for Miscellaneous Operations at TA-55 (TWCP-AK-2.1-004)

Process Acceptable Knowledge Summary Report for Nitrate Operations at TA-55 (TWCP-AK-2.1-005)

Process Acceptable Knowledge Summary Report for Pyrochemical Processes at TA-55 (TWCP-AK-2.1-006)

Process Acceptable Knowledge Summary Report for Special Processing at TA-55 (TWCP-AK-2.1-007)

- Preparation of specific alloys, including casting and machining these materials into specific shapes
- Determination of the high-temperature thermodynamic properties of plutonium
- Reclamation of plutonium from scrap and residues produced by numerous feed sources
- Disassembly of components for inspection and analysis
- Manufacturing of parts on a limited basis

Process Feed

Plutonium metal or metal alloys; plutonium oxides and hydroxide cakes; other actinide metals or metal alloys and oxides; plutonium scrap; disassembled weapons components (pits); plutonium-beryllium sources; pyrochemical salts; reactor fuel pellets; crucible pieces; ash; residues from other DOE facilities; anode heels; and analytical laboratory solutions.

Waste Material Parameter List

Waste materials: cellulosics, rubber, plastics; iron-based metals and alloys (less than 5 percent by volume)

Packaging materials: steel, plastics

Waste Stream Description

The combustible debris waste stream includes rubber, plastic-based, and cellulose-based waste generated at the facility. Plastic-based waste includes, but may not be limited to, polyethylene and vinyl tape; gloves; plastic vials; polystyrene; Tygon tubing; polyvinyl chloride plastic; Teflon products; Plexiglas; and dry box gloves (unleaded neoprene base). Cellulose-based waste includes, but may not be limited to, rags, wood, paper, and cardboard; laboratory coats and coveralls; booties and cotton gloves, and similar materials. The waste may also contain a small fraction (less than 5 percent) of non-combustible solids (e.g., scrap metal, metal lids, zippers, discarded tools).

RCRA Characterization

No HWNs apply to containers in waste stream TA-55-20.

Radionuclide Content

These waste streams predominantly contain a variety of plutonium material types with different well-defined isotopic compositions. Americium-241, neptunium-237, ~~protactinium-231~~ and uranium-234 may be present at detectable concentrations as decay products of their plutonium precursors. Some of the processes separate plutonium from americium and uranium. The waste will usually be enriched in americium-241 and uranium-234 relative to plutonium, but may also be depleted in some cases. Some waste may contain uranium and its decay products (e.g., uranium-234) from one of several uranium material types used as feed material. In addition, trace

Pickling. Pickling (i.e., leaching metal with a strong acid) is typically a head-end operation. After a few furnace runs, plutonium metal begins to accumulate on tools and furnace parts. It then becomes necessary to leach the plutonium from these items. In addition, after calcium metal reduction processes such as metal preparation, direct oxide reduction, and molten salt extraction, plutonium metal will have an adherent skin of calcium metal. Hydrochloric acid is used to dissolve Pu from tantalum furnace parts, and nitric acid is used to pickle Pu from other metals.

Plutonium Trichloride Preparation. An intermediate process in Pu metal production prepared plutonium trichloride by bubbling a carrier gas (chlorine) through carbon tetrachloride and passing the mixed gas stream through a bed of plutonium oxide at 500 °C–600 °C before being absorbed in a 5–6 molar potassium hydroxide solution. The carbon tetrachloride was broken down into phosgene, carbon monoxide, and carbon dioxide gases in this process, which was active between January 1987 and June 1989, at which time the process switched to the use of phosgene gas until the process ended in May 1991. Feed material was high purity oxides from the vault or from other P/S codes. The product plutonium trichloride was reduced to metal by the MSE or ER processes.

3.6 Material Inputs to the Waste Generation Processes

Material inputs to the waste generation processes derive from four general sources: (a) feed materials, (b) associated nuclear material types, (c) chemical use, and (d) ancillary material inputs such as those related to the use of laboratory equipment and materials and glovebox maintenance activities.

3.6.1 Feed Materials Identification

Block indent

The feed materials for TA-55 processes that generate waste in waste streams TA-55-19 and TA-55-20 consist of the general types of materials listed in Table 1. These feed materials are obtained either from the storage vault, as process outputs from various P/S codes, or from sources outside TA-55, including other DOE facilities.

These feed materials fall into four general categories:

- pure Pu metal to be recycled from pits and sealed sources or to be reworked into desired shapes or chemical forms

Block indent

- intermediate Pu products in purification processes, in the form of solutions, oxides, hydroxides, salts, anode heels, etc.
- a wide variety of matrices contaminated with Pu above the DL, such as ash, salts, equipment, and solutions
- experimental R&D feed materials

3.6.2 Radionuclide Content Identification

The primary Pu material type inputs for TA-55 processes are listed in Table 2. The designation *material type* (e.g., MT 52) is used within the DOE Complex to describe the isotopic composition of common blends of radioactive materials used within the Complex. The material type notation was developed because it is a convenient way to describe material types that have very consistent isotopic compositions. Table 2 indicates the isotopic composition of the material types at the time the waste was characterized.

The material type provides the basis for estimating an upper bound for U-234, U-235, and Am-241 contents based on the rate of decay of their precursors, Pu-238, Pu-239 and Pu-241, respectively. The purpose of such bounding calculations is to provide a basis for identifying significant enrichment or depletion of one radionuclide versus another, based on radioassays of individual waste containers (see Section 14). The results of these calculations are tabulated in the last three columns of Table 2, assume that (a) none of these isotopes were initially present in the material, (b) the oldest Pu material in inventory dates back to 1 January 1960, and (c) the waste was packaged on 1 January 1996, making it 36 years old at that time(TWCP-698).

^ insert space

TA-55 processes are not expected to alter the Pu isotopic ratios of the feed material. The material type used in the process generating each waste item was documented on the WODF and DWLS (examples shown in Attachment 4). However, other radionuclides will be present in most of the process wastes from decay of a Pu precursor or as a contaminant in the feed material:

3.6.3.5 *Organic chemicals.* The following organic chemicals used in the TA-55 processes are not identified as having hazardous characteristics in 40 CFR Part 261, including Appendix VIII in that regulation: 1-propanol, 3-in-1 household oil, ~~acetonitrile,~~ alkylating agents (unspecified), bromobenzene, bromocresol purple, carbon tetrafluoride, Citrapeel, DBBP (dibutyl butyl-phosphonate), DBBP (dibutyl butyl-phosphonate)/Isopar (isoparaffinic hydrocarbon solvent), diethyl oxalate, dihexyl n,n-diethylcarbamoylmethyl phosphonate (DHDCMP), diisopropyl benzene, Dow Corning 2000 Oil, Dowanol 80 (long-chain alcohol), ethanol, ethylene glycol, Fantastic, formamide, Fomblin brand pump oil, GoJo cleaner (kerosene derivative), hexane, hydrazine dihydrochloride, hydrazine hydrochloride, ion exchange resin, isopropanol, kerosene, Metalprep 79 (phosphoric acid-based metal cleaner), MolyKote, n-dodecane, Nuetracleaner #1, Nuetracleaner #2, octylphenyl diisobutyl carbamoylmethyl phosphine oxide (CMPO), oil (engine), organic liquid emulsifier, Organicstrip, perchlorocarbons, phenolphthalein, phosphate buffer solution, phosphine oxide, phthalate buffer solution, polyethylene glycol, polyoxyethylene-20-sorbitan laurate (surfactant), SF-2I (as coolant), silicon adhesive, silicon defoamer, sugar, surfactants, tetraethylamine hydrochloride, tetraethylamine hydroxide, tetraethylammonium hydroxide, Texaco Regal 32 oil (cutting oil), thionyl chloride, tributyl phosphate (TBP), tributyl phosphate (TBP)/Isopar (isoparaffinic hydrocarbon solvent), tributyl phosphate and iodine in kerosene, trioctylphosphine oxide (TOPO), urea, Vactra oil, vacuum grease, vacuum pump oil, WD-40, and Windex.

Several organic chemicals used in TA-55 processes are identified in 40 CFR Part 261 or in Appendix VIII of that regulation as having hazardous characteristics. Table 6 lists these chemicals, their HWNs, P/S codes in which they were used, and the applicability of the HWNs to the use of these chemicals in TA-55 processes.

4.0 DIVISION OF THE WASTE STREAM INTO LOTS

Waste containers in a waste stream are characterized as a campaign, in which the targeted group of waste containers to be characterized are selected based on criteria such as availability of the waste containers, waste loading level, availability of waste generator records, and hazardous waste numbers. TA-55-19A is one subset (i.e., lot) of waste stream TA-55-19. Waste in this lot, which is expected to consist of only a few drums, is

• CLS	F002, F003
• CSE	F002
• CW	F002, F003
• DA	F002
• HP	F002, F003
• MA	F001, F005
• SA	F002, F003, F005
• SE	F002
• WM, X0, XO	F001, F002, F005

In addition, debris waste generated under P/S codes SD and SS between 02/01/98 and 06/10/98 is assigned EPA HWN P120 (vanadium pentoxide).

It is possible that waste generated under P/S codes AC, AC2, and SA may require the assignment of EPA HWN U213 (tetrahydrofuran). This possibility is being investigated.

Because waste items from any of these P/S codes may be present in any given container of combustible debris waste, waste stream TA-55-19 (including lot TA-55-19A) is conservatively assigned the F-listings of F001, F002, F003, and F005. TA-55-19A is segregated for waste with the P-listing of P120. Waste containers assigned to waste stream TA-55-20 only contain items with known P/S codes that do not carry any EPA HWNs.

The reliability of this AK information can be assessed in part based on a review of headspace gas analyses for containers assigned to waste stream TA-55-19 (Section 14.4).

8.2 Toxicity Listings

Both TA-55-19 and TA-55-19A are conservatively assigned the D-listings of D004, D005, D006, D007, D008, D009, D010, D011, D018, D019, D021, D022, D035, D038, D039, and D040.

TA-55-20 has no D listings.

No D-listings are applicable to combustible debris waste generated by the following P/S codes: AC3 (inactive), ACC, AO (Assembly Operation), AO (Americium Processing Calcination), ARI, BA, BAC, BC, BL, BM, BT, CA, CC, CH, CN, CO, COD, CR, CRD, CT, DF, DP, DT, ELW, EM, EVAC, FA, FC, FSPF, GI, GMS, HC, HG, HRS, ID, IN, ITF, ITF4, JA, LC, LIBS, MAG, MAS, MBC, MF, MO, MOX, MP, MW, NCD, NEPTUNIUM, NR, OB, OM, OR, OY, PA, PAF, PD, PF, PH, PI, PIG, PPD, PR, PS, RAP, RAP2, RB, RBJ, RCM, RD, RFX, RL, RM, RS, SBB, SCB, SMP, SRL, SX, TIGR, UA, UPS, US, US2, VD, VP2, VS, WE, WLT, and ZD.

RA

NL	D006, D008
OD	D006, D007, D008
OH	D006, D007, D008, D009, D011
PB	D007, D008, D009
PCH	D007
PE	D004 (1984–1985)
PK	D006, D007, D008, D011
POSM	D007, D011
PRR	D007, D009
PT	D007
PTP	D019
PTS	D005, D006, D007, D008, D011
PUB	D007, D008, D009
PX	D006, D008, D019
~~RA~~	~~D005 (applies only to zinc metal buttons)~~
RASS/RSS	D004, D005, D006, D007, D008, D009, D010, D011, D019
RC	D005, D006, D007, D008, D011
RO	D006, D008, D040
RR	D006, D007, D008, D009, D011
SA	D007, D009, D018, D038
SB	D005, D006, D007, D008, D011
SC	D005, D006, D007, D008, D011
SE	D007, D008, D009, D039
SL	D005, D006, D007, D008, D011
SO	D004, D005, D006, D007, D008, D009, D010, D011
SP	D007
SS	D006, D008
SSD	D006, D007, D008
SSMD	D009 (D listing applies only from 06/94 to 08/94)
STF	D007
TDC	D005, D006, D007, D008, D011
VC	D006, D008
VP1, VP3	D009 (D listing applies only from 09/85 to 10/85)
VU, VUL	D005, D008
WM, X0, XO	D007, D008, D009, D022, D035, D040

~~Part in TA-55 vault~~ report, which are still in the vault as of April 2001

ed chemical used

NOTE: These HWNs are assigned to all three codes in order to be conservative as discussed in *Acceptable Knowledge Summary Report for Miscellaneous Operations at TA-55* (TWCP-AK-2.1-004,R.2, Section 3.4.9). stet

WM after 1993: This code No longer used for rejected LLW, which went to XO or XO instead or back to waste generator

∴ WM – non-mixed after 1993

XES	D004, D005, D006, D007, D008, D009, D010, D011
XP	D004, D005, D006, D007, D008, D009, D010, D011

9.0 VERIFICATION THAT IGNITABLE, REACTIVE, AND CORROSIVE WASTES WERE EXCLUDED

According to the WIPP WAP, "The prohibition of liquids and containerized gases prevents the shipment of corrosive, ignitable, or reactive wastes." The waste streams covered by this AK report have no listings for corrosivity, reactivity, or ignitability. Administrative controls on waste packaging were in place at various times to ensure the absence of such items from the waste stream.

- Liquids were prohibited from solid waste streams at TA-55 when the facility opened in January 1978. A waste management procedure written to cover operations at the new facility, *TA-55 Standard Operating Procedure (SOP) 406-GEN-R00*, stated that "Liquids are not permitted in any container of solid waste materials" (TWCP-3943).

- Chemical Waste Disposal Requests (see Attachment 5), introduced in June 1980, included check boxes which the waste generator was required to check if the waste contained corrosive acids or bases, or pyrophoric, flammable, corrosive, explosive, toxic, carcinogenic or highly reactive materials.

- The Certification Plan (TWCP-697) and related Generator Attachment 5 for TA-55 (TWCP-701) were implemented in 1987. Waste generators were required to sign a statement on the WODF (see Attachment 4, pp. 4 and 5) documenting that the waste contained "no free liquids, pyrophorics, explosives, compressed gases, powders or materials other than the indicated matrix." Checkboxes were also present for indicating the presence or absence of corrosive chemicals. Full implementation of this generator statement occurred in May 1987.

- Waste management inspectors perform visual examination of the waste prior to its initial packaging, thus allowing the inspectors to verify the generator's WODF statement (TWCP-701, Sections 3.8.5 to 3.8.6).

- In addition to the above-mentioned prohibitions on explosives in waste, explosives were altogether prohibited from TA-55 until installation of the Impact Test Facility in the early 1990s. In case of a misfire or unconsumed explosives, a procedure is in place at TA-55 to ensure that explosives do not enter the waste stream (TWCP-4720).

- The Waste Profile Request Form (WPRF), which has been in use at LANL since 1991, includes a statement which must be authenticated by the waste generator, that the waste is not ignitable (flash point >200°F), reactive, or corrosive.

- The TA-55 Generator Attachments to the Certification Plan were updated in 1995 (TWCP-700) but the prohibition on liquids in the waste, and the waste management inspection, remained in effect.

Hence, since the inception of operations at TA-55, corrosive ~~and reactive~~ wastes have been excluded from TA-55 solid wastes through the prohibition of liquids.

reactive – see section 3.6.3

Controls have also been in place to ensure the exclusion of ignitable constituents. D001 does not apply to wastes in these waste streams despite the use of spent non-halogenated solvents (HW-F003), for the following reasons:

- Solutions containing spent non-halogenated solvents are sent to the RLWTF if they are below the DL for Pu.

- If above the DL, the solutions are sent to aqueous processes as part of chloride or nitrate operations. Aqueous recovery steps include dissolution of any solid Pu in hydrochloric or nitric acid, followed by Pu recovery by ion exchange. The solutions are then below the DL and are either sent to the RLWTF or to the evaporator.

- Rags that are above the DL for Pu are thermally decomposed, which destroys any organic component.

- Rags that are below the DL for Pu are discarded as combustible debris, but headspace gas analyses support the contention that the solvents are not present in the waste at levels of concern (Section 14.4).

- Finally, 100 percent of the drums are subjected to headspace gas analysis, and drums showing over 500 ppm total flammable VOCs are prohibited from being shipped to WIPP. (This limit is quite conservative. For comparison, the explosive limit for acetone by itself is 25,000 ppm.)

The absence of these prohibited items is verified through radiography of each waste container and visual examination of selected containers during TWCP characterization activities. Any free liquids are absorbed onto ~~kitty litter~~ vermiculite and discarded in an appropriate waste stream and containerized gases that are found to be present are removed, or the container is tagged as non-compliant by filing a Prohibited Waste Report in accordance with *Nonconformance Reporting and Tracking* (TWCP-QP-1.1-007).

10.0 VERIFICATION THAT INCOMPATIBLE CHEMICALS WERE PROHIBITED

Controls are in place to ensure chemical compatibility for the waste contents and the TRUPACT-II. Section 9.0 summarizes administrative controls in place at TA-55 that prohibit incompatible chemicals in the waste, and measures taken to verify their absence. In addition, all waste containers shipped from TA-55 to TA-54 for storage were evaluated for potentially incompatible chemicals in accordance with 49 CFR Subpart C—

Segregation and separation chart of hazardous materials; Section 177.848, Segregation of hazardous materials, and were determined to be in compliance with this requirement.

For waste that has been generated after the implementation of the 1987 Certification Plan, Generator Attachments, waste generators signed a statement on the WODF for each waste items specifying that the waste contained "no free liquids, pyrophorics, explosives, compressed gases, powders or materials other than the indicated matrix." Prior to the installation of the Impact Test Facility in the early 1990s, explosives were prohibited from TA-55. In addition, waste management inspectors performed visual inspection of the waste prior to its initial packaging, thus allowing the inspectors to verify the generator's WODF statement.

A chemical compatibility analysis was performed for TRUCON codes 116/216 (combustible waste) which indicated that all chemicals and the waste matrix were compatible at levels greater than trace amounts (*Content Code Assessments for LANL TRUCON Codes* [DOE/WIPP-89-004]). During the process AK search, additional chemicals were identified that necessitated a new compatibility analysis. ~~Because these additional chemicals are only present at trace quantities in the TA-55-19 and TA-55-20 waste streams, no incompatibilities were found to exist.~~ (TWCP-XXX) which is underway at the present time.

11.0 VERIFICATION THAT THERE ARE NO COMPRESSED GASES, FREE LIQUIDS, NONRADIONUCLIDE PYROPHORICS, SEALED CONTAINERS GREATER THAN FOUR LITERS IN VOLUME, OR >1% RADIONUCLIDE PYROPHORICS

Most gases used at the TA-55 Plutonium Facility are stored outside the building and the gas is plumbed into the glovebox from outside the building (TWCP-4164). Occasionally, a lecture bottle may have been used for a process inside the building, but these bottles were kept outside of the glovebox with the gas plumbed into the glovebox. Consequently, compressed gas cylinders or containers are not expected to be in any of the TRU wastes generated by TA-55 operations.

Spray cans, especially WD-40, were in common use in TA-55 gloveboxes until May 1992 (TWCP-4166). These were routinely discarded as metal debris waste. From 1988 until May 1992, the protocol was to vent or puncture the spray cans inside the glovebox; venting was indicated by inserting a metal wire into the valve. After May 1992, spray cans were no longer used in gloveboxes.

Verification that individual waste drums do not contain compressed gases, free liquids, or sealed containers greater than 4 L in volume is obtained from radiography of each waste container and visual examination of selected containers during TWCP characterization activities. Any free liquids are absorbed, and any sealed containers greater than 4 L in volume, or unpunctured or unvented gas containers, are removed; or else the container is

Table 8. RTR waste data for waste streams TA-55-19 and TA-55-20

Evaluated waste characteristic	Number of drums			
WIPP-compliant RTR data				
• TA-55-19	245	out of	4173	6% of waste stream
• TA-55-20	20	out of	281	7% of waste stream
WMC discrepancies				
• TA-55-19	3	out of	245	1% of drums examined
• TA-55-20	0	out of	20	0% of drums examined
Excluding drums with confirmed WMC discrepancy				
Free liquids (no PWR required; all <1" of container or <1% of drum)	34	out of	262	13 % of drums examined
Sealed containers > 4L (PWR required)	31	out of	262	13 % of drums examined
Pressurized containers	0	out of	262	0 % of drums examined
~~Loaded gloves (not prohibited)~~	~~13~~	~~out of~~	~~262~~	~~5 % of drums examined~~ delete
Unpunctured liner	0	out of	262	0 % of drums examined
Other prohibited items	0	out of	262	0 % of drums examined
Excluding drums with PWRs				
Proportion of combustible waste in drum (weight %)				
• Less than 25%	0	out of	231	0 % of drums examined
• 25 to 50%	1	out of	231	< 1 % of drums examined
• 50 to 75%	7	out of	231	3 % of drums examined
• More than 75%	223	out of	231	97 % of drums examined

Data sources: RTR batch data reports TWCP-4019, 4020, 4021, 4080, 4219, 4399, 4400, 4457, 4458, 4459, 4464, 4471, 4542, 4543, 4544, 4545, 4566, 4570, 4572, 4573, 4574, 4577, 4721, 4797, 4835, 5110, 5121, 5147; RTR batch data report still in Project-level review: LA01-RTR-006.

Table 9. RTR packaging data for waste streams TA-55-19 and TA-55-20

Maximum number of layers	Metal Layers	Plastic Layers	No. of Drums	% of Total Examined	
Less than or equal to 1	0	1	2	out of 231	1% of drums
Less than or equal to 2	0	2	21	out of 231	9% of drums
Less than or equal to 3	0	3	95	out of 231	41% of drums
Less than or equal to 4	1	3	2	out of 231	1% of drums
Less than or equal to 5	None observed		0	out of 231	0% of drums
Less than or equal to 6	None observed		0	out of 231	0% of drums
Total number of layers	0	Indeter	109		
indeterminant due to number of plastic horsetails:	1	Indeter	2		
	Subtotal		111	out of 231	48% of drums

Data sources: RTR batch data reports TWCP-4019, 4020, 4021, 4080, 4219, 4399, 4400, 4457, 4458, 4459, 4464, 4471, 4542, 4543, 4544, 4545, 4566, 4570, 4572, 4573, 4574, 4577, 4721, 4797, 4835, 5110, 5121, 5147; RTR batch data report still in Project-level review: LA01-RTR-006.

25
95
111
231

- confirmation of WMC S5300 for 98.9 percent of the drums examined
- identification of WMC discrepancies for 3 containers (1.1 percent of the drums examined), which must be reassigned to other waste streams
- identification of potentially sealed containers > 4 liters in 13 percent of the drums, for which PWRs were submitted
- confirmation of the absence of any other prohibited item or condition requiring a PWR
- confirmation of 4 or fewer packaging layers for 52 percent of the drums. Plastic packaging layers for the remaining 48 percent were indeterminate due to the large ~~amount~~ number of horsetails present in the drums
- confirmation of the waste stream description:
- 97 percent of the drums contain more than 75 wt percent combustible waste;
- 86 percent of the drums contain less than 5 wt percent metal waste, and 94 percent contain less than 10 wt percent metal waste.

Changes in waste stream assignment because of characterization data are documented in accordance with *Waste Characterization Data Reconciliation with Acceptable Knowledge* (TWCP-DTP-2.1-064).

AK information resolved an apparent WMC discrepancy for several drums in waste stream TA-55-19 which contained material identified as metal by the RTR operator, thereby leading to an apparent WMC of S5110 (for metal debris) (TWCP-3288, 3289, 3290, 3291, 4190). After reviewing with the generator how these drums were packaged, the generator determined that these drums were packaged with very dense in-house fabricated plastic material called polyvinyldienefluoride (PVDF, also known as Kynar) used to line gloveboxes and build equipment in chloride operations starting in about 1988 (TWCP-5157). Hence, the WMC S5300 was correct. As a result of this AK information, a sample of Kynar was added to one of the test drums used in the RTR operations.

14.2 Visual Examination Data

VE data are used to confirm AK information on waste stream descriptions, WMC, the absence of prohibited items, the number and type of confining layers, and the relative volumes and weights of waste matrix parameters. AK packaging and WMC information have been evaluated by VE for about 22 containers so far in waste streams TA-55-19 and TA-55-20, in accordance with *Reconciliation of Visual Examination and Radiography Information* (TWCP-QP-1.1-028). These 22 drums were packaged between 11/85 and 8/97 (Sampling Plan). P/S codes are

~~This~~ Note that TA-55 waste generators followed guidance that waste metal cans ~~for disposal~~ used to contain debris were to be considered as packaging, and not as waste.

put ~~into~~

available for the waste items packaged in these drums, as documented in radioassay batch data reports (TWCP-4024, TWCP-4025, TWCP-4052, TWCP-4158, TWCP-4303) and waste generator records (TWCP-5086). (The codes for these drums are listed in Table 11, which is discussed in section 14.3). VE results are summarized in Table 10, from which the following observations are made:

- VE confirmed the AK WMC for all of these drums, reporting WMC S5300 (Organic Debris) for 8 drums, and S5310 for 14 drums. (Plastic/Rubber Debris) define WMC
- The maximum number of confining layers observed by VE was five (for one drum), consistent with AK information indicating that the number of layers is six or less (TWCP-816; also Table 7 of this report).

  NOTE: RTR data for the number of plastic layers in this particular drum were indeterminate.

- No closed liners were found by VE, which confirmed AK and RTR information.

- For 5 drums, the number of confining layers observed during VE (2 to 4) was greater than the number of layers associated with the TRUCON code assigned for these drums by the waste generator (LA116C, 1 layer).

- For 4 of the above drums, the default AK value (LA116E, 1 layer) would also have been less conservative than the VE findings. All 4 had been packaged after January 1997 such that no more than 1 layer was expected (Table 7).

A conservative conclusion is that these discrepancies indicate that TRUCON code assignments by the waste generator must be viewed with caution, at least with respect to waste containers packaged in 1997 when TA-55 personnel were transitioning from one packaging procedure to another. Additional investigation is needed to remedy this discrepancy in reporting packaging layers.

14.3 Radioassay Data

Radioassay data are examined to confirm AK information on plutonium material type and mass, the presence of other radionuclides contributing to the total drum activity, and evidence for fractionation of other actinides (e.g., uranium, americium) relative to plutonium during material processing. Table 11 summarizes information relevant to these evaluations for the 22 drums from TA-55-19 and TA-55-20 that have undergone VE. These data confirm the following AK information:

- the dominant isotope in all drums is Pu239

- the material type is MT52 or MT53 for all drums

Table 10. VE data for waste streams TA-55-19 and TA-55-20

Characterization data	Number of containers				Comments
	AK (see Note 1)		RTR	VE	
Waste Matrix Code					
S5000	—		—	—	Positive confirmation of AK WMC by RTR and VE for all 22 drums
S5300	22		22	8	
S5310	—		—	14	
Maximum # of layers and associated TRUCON codes	Default (Table 7)	Assigned in SP	See Note 2		Number of confining layers • AK and VE match for 3 drums • AK more conservative than VE for 14 drums • AK from waste generator was less conservative than VE for 5 drums
0 LA116G	—	—		—	
1 LA116C, E, F	—	6		2	
2 LA116B, D	—	—		2	
3 None	—	—		9	
4 LA116A	4	4		8	
5 LA116H	—	—		1	
6 LA116I	8	—		—	

SP—Sampling Plan (Rev 3)

Notes:
1. AK information for WMC and TRUCON code assignments is from the Sampling Plan, Rev 3. If no TRUCON code was assigned, then the default code was determined from Table 7, using AK information on packaging dates and P/S codes as documented in the Sampling Plan.
2. RTR data indicated no metal packaging layers for any of these drums, which was consistent with AK information and confirmed by VE. The number of plastic packaging layers was indeterminate by RTR except for one drum with three layers, which was consistent with the default TRUCON code and confirmed by VE (TWCP-4393).

Data sources: VE batch data reports TWCP-3947, 3948, 3949, 3950, 3951, 4022, 4326, 4327, 4392, 4393, 4394, 4427, 4800, 5085, 5112, 5120; VE batch data reports still in Project-level review: LA00-3.4.1-005, ~~LA01-VE-002~~. 9

5115

, ~~5171~~ 5173, ~~5159~~ 19

not included?

Missing records for:

5083 ✓ LA01-VE-003 TWCP# 5083

Open ✓ LA00-3.4.1-005 → ON HOLD RECON

5084 ✓ LA00-VE-001

5077 ✓ LA00-VE-002

✓ -003

which one is 3947?

Count: 22 OK

Table 11. Radioassay Data for Waste Streams TA-55-19 and TA-55-20

Radionuclide Characteristics	Number of drums	Comments
Pu isotopic fractions		Dominant isotope is Pu239 in all drums
• Pu238 / total Pu	22	0.010 to 0.069 ← too high by ~ 100
• Pu239 / total Pu	22	0.911 to 0.941
• Pu240 / total Pu	22	0.057 to 0.085
• Pu241 / total Pu	22	0.14 to 0.32
• Pu242 / total Pu	22	0.009 to 0.055
Material type		
• MT52	19	
• MT53	2	
• MT52/53 mix	1	
Total Pu mass, expressed as ratio of AK data to NDA data		AK data from Sampling Plan (Rev 3) AK/NDA ratios range from 0.6 to 1.4
• AK/NDA < 0.7	1	
• 0.7 < AK/NDA < 1.3	17	
• AK/NDA > 1.3	4	
Other actinides present at detectable levels (uncertainties ≤ 21.5%)*		*Range of ratios of nuclide to total Pu* Measured ratios / Calculated ~~upper bound (Table 6)~~ 2
• Am241	22	1×10^{-3} to 9×10^{-3} / 2×10^{-3} to 3×10^{-3}
• Am243	22	4×10^{-7} to 4×10^{-6} / Not applicable
• Np237	22	2×10^{-4} to 1×10^{-2} / Not applicable
• U234	21	7×10^{-3} to 6×10^{-2} / 2×10^{-5} to 2×10^{-5}
• U235	5	3×10^{-3} to 5×10^{-2} / 9×10^{-4} to 1×10^{-3}
• U238	0	No measurable U238 / Not applicable
Other radionuclides present at detectable levels (uncertainties ≤ 21.5%)*		Note Th232 is not detectable by the methods used
• Cs137	16	
• Pa231(uncertainty <21.5%)	9	
• No other detectable nuclides	2	
Ratio of measured ratio (Am241/Total Pu) to calculated upper bound (0.002, Table 2)		
• Ratio < 1	2	Am241 could be from decay of Pu241
• 1 < ratio < 2	7	Process waste probably enriched in Am241
• 2 < ratio < 3	7	Process waste enriched in Am241
• Ratio > 3	6	Process waste enriched in Am241

P/S codes for waste items present in these drums (TWCP-5086). The number of drums containing waste items from each code is given in parentheses, if more than one.

- Chloride operations: CSE, CW, CX (3), CXL (7), MB, MS
- Metal operations: CA (2), FF, MA, MW, PH, SRL
- Miscellaneous operations: AD (2), CV, IB (5), ME, WM (3), XP
- Nitrate operations: ATL, BM (4), COD, DS (3), ED (7), EV (4), HCD, LR (4), MAG, NC (6), NL (2), OD, PR (2), RBJ, RR (2), SC (8), SP (4), SSD
- Pyrochemical operations: ER (3), MO, OR (3), SS (3)
- Special processing: None

NDA—nondestructive assay

- all these drums qualify as TRU waste

- AK information on total mass of Pu in each drum is within 30 percent of the TWCP assay value for 17 drums (77 percent). AK mass for the remaining five drums (23 percent) is within 40 percent of the TWCP assay value.

- As indicated by AK information, all drums contain low but detectable quantities of Am-241, Am-243, and Np-237. A significant proportion also contains Cs-137 and Pa-231.

- No U-236 or U-238 was detected, confirming AK information that uranium is not expected to be present in process waste generated under the P/S codes listed as the source of waste in these drums

- U-235 is present only at trace levels in 5 drums

- In 20 drums (91 percent), Am-241 and U-234 are enriched beyond what would be predicted if they were present solely due to the decay of their precursors in the source Pu, indicating that significant fractionation of Am and U from Pu occurs during processing operations

14.4 Headspace Gas Data

Headspace gas data are examined to confirm AK information about the presence or absence of hazardous constituents in a given waste stream, and the assignment of each drum to the appropriate mixed or nonmixed waste stream. Table 12 summarizes VOC target analyte concentrations for headspace gas samples from 55 containers assigned to waste stream TA-55-19. (No approved data are yet available for drums from waste stream TA-55-20.) These data confirm the AK information:

- Altogether, 13 different VOCs were detected in these drums. All are documented as having been present or used in TA-55 processes contributing to waste stream TA-55-19, and HWNs have already been assigned to this waste stream for these constituents.

- Only one VOC, methylene chloride, had a 90% Upper Concentration Limit (UCL_{90}) value that was above its program required quantitation limit (PRQL).

- Four VOCs—acetone, 1,1,2-trichloro-1,2,2-trifluoroethane, methyl ethyl ketone, and toluene—had UCL_{90} values below the PRQL but were present in at least one drum at a concentration above the PRQL.

- One VOC (methanol) had a mean concentration above its Method Detection Limit (MDL) but no concentrations above the PRQL.

- Seven VOCs had mean concentrations below their MDL, but were present in at least one drum at a concentration above the MDL.
- All other target analyte VOCs were below the MDL.
- No Tentatively Identified Compounds (TICs) were detected.

These results are consistent with AK information summarized in this waste stream report, insofar as all of the VOCs that were detected are known to have been present in TA-55 operations. The data confirm that assignment of these HWNs based on AK information is conservative.

Table 13 summarizes concentrations of potentially flammable VOCs, hydrogen, and methane for headspace gas samples from the same 55 containers as are included in Table 12. All were below the WAC limits. The average concentration of potentially flammable VOCs for this set of 55 drums was 128 ±101 ppm ppmv, with a maximum of 473 ppm (TWCP-4722). No methane was detected in any of the drums, and hydrogen concentrations were lower by more than an order of magnitude than the WAC limit of 5 percent.

In conclusion, the headspace gas data confirm the presence of VOCs in waste stream TA-55-19; no VOCs were present which were not expected based on AK. However, no correlation is seen between the presence and absence of a specific VOC and its documented use in a process known to have contributed waste placed in a particular drum. For example, about 60 percent of the containers show measurable concentrations of acetone and/or toluene in the headspace gas, and 20 percent contain methylene chloride, but less than half of the drums in which these chemicals are present contain waste items generated by activities that were known to have used these chemicals. ~~Radiolytic production of VOCs is a possible contributing explanation, but additional AK investigation is needed to verify that a waste generator source of these VOCs has not been overlooked.~~

The most plausible ~~The most likely~~ explanation is that acetone + toluene (methylene Cl) ~~(and MEK?)~~ are present as solvents used in the manufacturing and plastics, and radiolytic degradation of the plastic polymers may also be a contributing factor.

ACCEPTABLE KNOWLEDGE ROADMAP

Waste Streams: TA-55-19 and TA-55-20.

Documents are in the TWCP RMDC Center.

TWCP Record No.	Information Category Code	Information	Source	Summary	Limitations
TWCP-To Be Determined	A	Reconciliation between AK, VE and RTR data for drum from waste stream TA-55-20 (per Sampling Plan, R3)	LA00-3.4.1-005	VE, AK and RTR data on WMC, number and types of packaging layers, TRUCON code, and waste items in drum	VE batch data report still in Project-level review
TWCP-4800	A	Reconciliation between AK, VE and RTR data for drum from waste stream TA-55-19 (per Sampling Plan, R3)	LA00-3.4.1-006	VE, AK and RTR data on WMC, number and types of packaging layers, TRUCON code, and waste items in drum	None
TWCP-5112	A	Reconciliation between AK, VE and RTR data for drum from waste stream TA-55-19 (per Sampling Plan, R3)	LA01-VE-001	VE, AK and RTR data on WMC, number and types of packaging layers, TRUCON code, and waste items in drum	None
TWCP-~~To Be Determined~~ 5173	A	Reconciliation between AK, VE and RTR data for drum from waste stream TA-55-19 (per Sampling Plan, R3)	LA01-VE-002	VE, AK and RTR data on WMC, number and types of packaging layers, TRUCON code, and waste items in drum	~~VE batch data report still in Project-level review~~
TWCP-5085	A	Reconciliation between AK, VE and RTR data for drum from waste stream TA-55-19 (per Sampling Plan, R3)	LA01-VE-004	VE, AK and RTR data on WMC, number and types of packaging layers, TRUCON code, and waste items in drum	None
TWCP-5120	A	Reconciliation between AK, VE and RTR data for drum from waste stream TA-55-19 (per Sampling Plan, R3)	LA01-VE-005	VE, AK and RTR data on WMC, number and types of packaging layers, TRUCON code, and waste items in drum	None
TWCP-~~To Be Determined~~ 5115	A	Reconciliation between AK, VE and RTR data for drum from waste stream TA-55-20 (per Sampling Plan, R3)	LA00-3.4.1-003	VE, AK and RTR data on WMC, number and types of packaging layers, TRUCON code, and waste items in drum	~~VE batch data report still in Project-level review~~

* Information Category Codes: A = forms intended for use in waste certification, B = data from controlled databases and published documents, C = unpublished data, and D = interviews, memos, and letters

SIMPLIFIED PROCESS FLOW DIAGRAM FOR METAL OPERATIONS

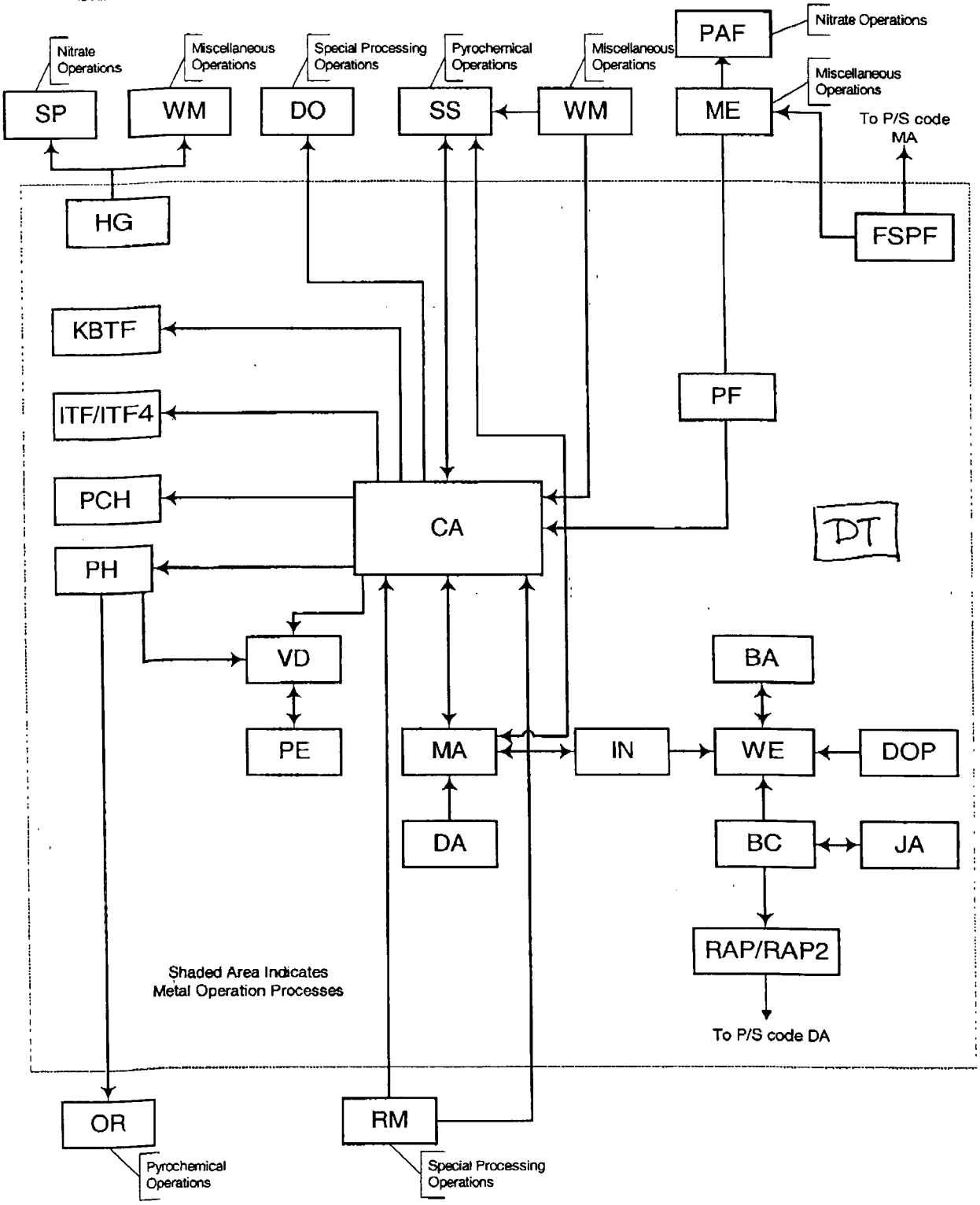

NOTE: All of these P/S codes may obtain feed material from or send product output to the vault.

P/S code

TA-55 PLUTONIUM FACILITY
ACCEPTABLE KNOWLEDGE REPORT

REPORT TITLE: Acceptable Knowledge Summary Report for Waste Streams TA-55-19 and TA-55-20

REPORT NUMBER: TWCP-AK-2.1-008,R.2 (LA-UR-01-)

WASTE GENERATED FROM WASTE STREAMS: TA-55-19 (including Lot TA-55-19A) and TA-55-20

EFFECTIVE DATE: _____

NEXT REVIEW DATE: _____

DOCUMENT PREPARER:

_____ _____
JOHN MUSGRAVE DATE

APPROVALS:

_____ _____
INDEPENDENT TECHNICAL REVIEWER/EDITOR DATE

_____ _____
SITE PROJECT MANAGER DATE

_____ _____
WASTE CERTIFICATION OFFICIAL DATE

_____ _____
SITE PROJECT QA OFFICER DATE

_____ _____
FACILITY REPRESENTATIVE DATE

© 2000, 2001 University of California

ACRONYMS

AK	acceptable knowledge
ARIES	Advanced Recovery and Integrated Extraction System
CFR	*Code of Federal Regulations*
CMPO	octylphenyldiisobutylcarbamoylmethylphosphine oxide
C–N–O	carbon–nitrogen–oxygen
CSMO	Central Scrap Management Office
DBBP	dibutyl butylphosphonate
DCHP	dicesium hexachloroplutonate
DHDCMP	dihexyl N,N-diethylcarbamoylmethyl phosphonate
DL	discard limit
DOE	U.S. Department of Energy
DOR	direct oxide reduction
DTP	detailed technical procedure
DWLS	Discardable Waste Log Sheet
EPA	U.S. Environmental Protection Agency
F	Chemical symbol for Fluoride, or RCRA hazardous waste number prefix for hazardous wastes from non-specific sources, defined in 40 CFR Subpart D, Section 261.31
FOOF	dioxygen difluoride
HEPA	high-efficiency particulate air
HWN	hazardous waste number
ICP	Inductively coupled plasma
ID	item identification
IDC	item description code
K	RCRA hazardous waste number prefix for hazardous wastes from specific sources, defined in 40 CFR Subpart D, Section 261.32
LANL	Los Alamos National Laboratory
LLW	low-level waste
M	molar
MCDOR	multicycle direct oxide reduction
MDL	Method detection limit
MEGAS	Multiple Energy Gamma Assay System
MSE	molten-salt extraction
MT	material type
NDA	nondestructive assay
NIOSH	National Institute for Occupational Safety and Health
NMT	Nuclear Material Technology
P	Chemical symbol for Phosphorus, or RCRA hazardous waste number prefix for acute hazardous waste defined in 40 CFR Subpart D, Section 261.33
PCB	polychlorinated biphenyl
PF	Plutonium Facility
ppm	part per million

ppmv	part per million, on a volume basis
PRQL	program required quantitation limit
P/S	process/status [code]
PuBe	plutonium–beryllium
PVDF	polyvinyldienefluoride (also known as Kynar)
PWR QA	quality assurance — Prohibited Waste Report
QP	quality procedure
R&D	research and development
RCRA	Resource Conservation and Recovery Act
RD&D	research, development, and demonstration
RFETS	Rocky Flats Environmental Technology Site
RLWTF	Radioactive Liquid Waste Treatment Facility
RMDC	Records Management/Document Control
RSWD	radioactive solid waste disposal
RTR	real-time radiography
Sampling Plan	*Los Alamos National Laboratory Transuranic Waste Characterization Sampling Plan* (TWCP-PLAN-0.2.7-001)
SME	subject matter expert
SOP	safe operating procedure
TA	technical area
TBP	tributyl phosphate
TOPO	trioctylphosphine oxide
TRU	transuranic
TRUCON	TRUPACT-II Content Code
TRUPACT-II	Transuranic Waste Transporter-Model II
TWBIR	Transuranic Waste Baseline Inventory Report
TWCP	Transuranic Waste Characterization/Certification Project
U	Chemical symbol for Uranium, or RCRA hazardous waste number prefix for toxic waste defined in 40 CFR Subpart D, Section 261.33(f)
UCL_{90}	90% Upper Concentration Limit
UCNI	unclassified controlled nuclear information
VE	visual examination
VOC	volatile organic compound
WAC	Waste Acceptance Criteria
WIPP	Waste Isolation Pilot Plant
WIPP WAP	Attachment B, Waste Analysis Plan, to the *Hazardous Waste Facility Permit Issued to the Waste Isolation Pilot Plant* (EPA No. NM4890139088)
WODF	Waste Origination and Disposition Form
WPRF	Waste Profile Request form
XES	X-ray energy spectroscopy

- Drums containing waste generated from P/S codes SD and SS between 02/98 and 06/98 are segregated as a subset of TA-55-19 due to the potential presence of vanadium pentoxide (EPA HWN P120). (See separate AK summary for waste stream lot TA-55-19A).

Radionuclide Content

These waste streams predominantly contain a variety of plutonium material types with different well-defined isotopic compositions. Americium-241, neptunium-237, protactinium-231, and uranium-234 may be present at detectable concentrations as decay products of their plutonium precursors. Some of the processes separate plutonium from americium and uranium. The waste will usually be enriched in americium-241 and uranium-234 relative to plutonium, but may also be depleted in some cases. Some waste may contain uranium and its decay products (e.g., uranium-234) from one of several uranium material types used as feed material. In addition, trace levels of cesium-137 may be present because this fission product was not completely separated from plutonium during Purex processing at other DOE sites. Other waste may contain various radionuclides used as feed materials for producing detector materials, including americium-241, americium-243, cerium-144, curium-244, protactinium-231, neptunium-237, thorium-232, thorium-232 enriched in thorium-230, uranium-233, and depleted uranium.

Primary References for Documentation of Acceptable Knowledge

Los Alamos National Laboratory Transuranic Waste Characterization Sampling Plan (TWCP-PLAN-0.2.7-001,R.3)

Process Acceptable Knowledge Summary Report for Chloride Operations at TA-55 (TWCP-AK-2.1-002)

Process Acceptable Knowledge Summary Report for Metal Operation Processes at TA-55 (TWCP-AK-2.1-003)

Process Acceptable Knowledge Summary Report for Miscellaneous Operations at TA-55 (TWCP-AK-2.1-004)

Process Acceptable Knowledge Summary Report for Nitrate Operations at TA-55 (TWCP-AK-2.1-005)

Process Acceptable Knowledge Summary Report for Pyrochemical Processes at TA-55 (TWCP-AK-2.1-006)

Process Acceptable Knowledge Summary Report for Special Processing at TA-55 (TWCP-AK-2.1-007)

WASTE GENERATION SUMMARY DIAGRAM

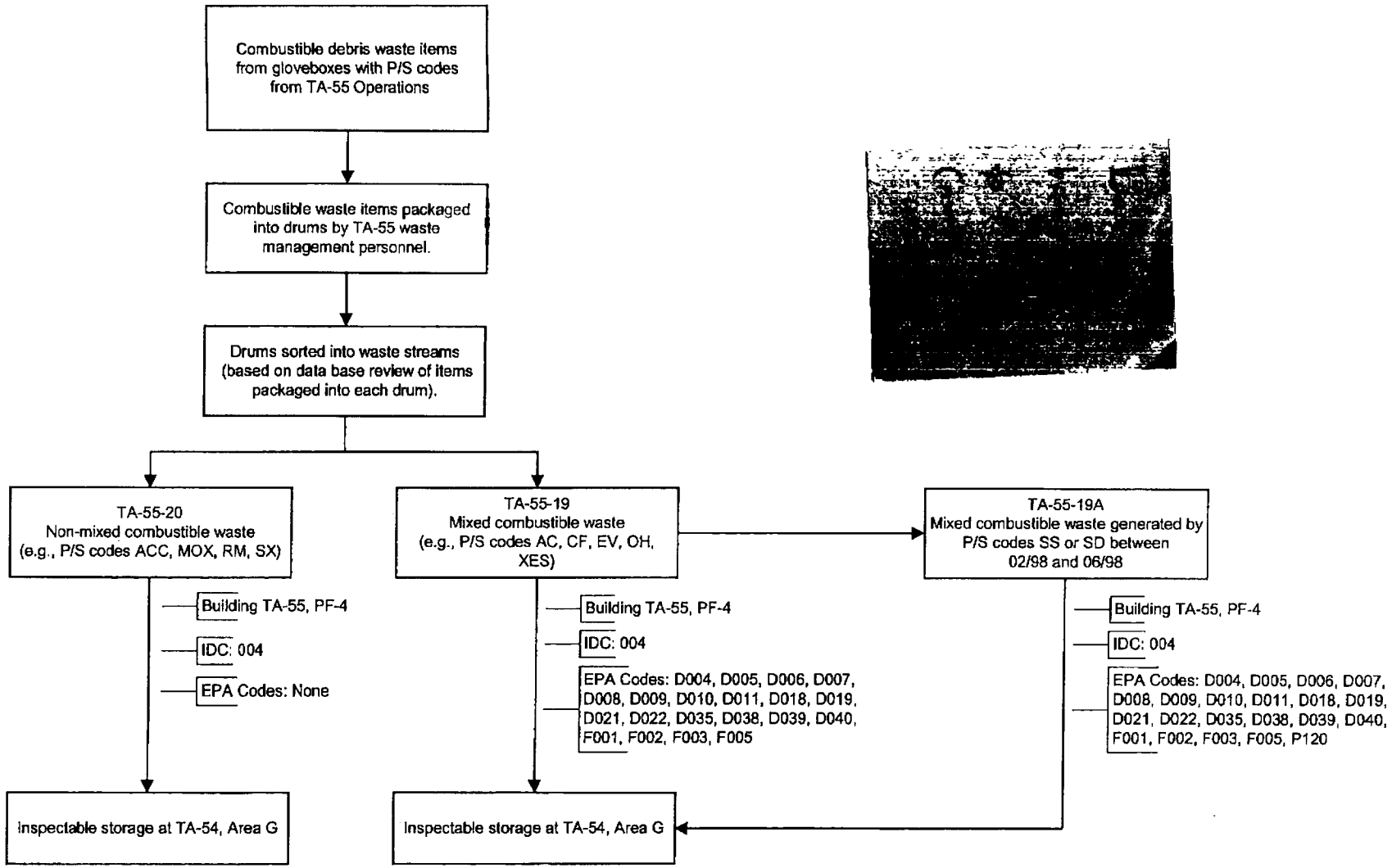

provide background information to support the process used by TWCP to assign TA-55 waste containers to specific waste streams. Waste stream assignment is made on the basis of waste generator information compiled in the TWCP waste container data base, which comprises the bulk of the Sampling Plan. Waste generator information is reviewed to identify the types and sources of waste items present in each drum, ~~to evaluate~~ the most appropriate waste summary group, waste matrix code, and potential for the presence of hazardous constituents in the drum. which are key factors in the evaluation of

3.2.1 Waste Packaging at TA-55

Inspection, collection, documentation and packaging operations of solid, certifiable TRU wastes at TA-55 are conducted in PF-4 by a waste management section or team (TWCP-352, TWCP-700, TWCP-701, TWCP-3943). Wastes from all TRU waste-generating activities at TA-55 are handled and packaged by this team. Materials are considered waste only when they have been received and processed by the waste management team. Waste segregation schemes used by this team have evolved since operations began at the Plutonium Facility in 1978.

In 1978, the standard operating procedure for waste management at TA-55 stated the guiding philosophy of minimizing the amount of waste generated and minimizing the plutonium content of that waste (TWCP-3943). Discard Limits (DL) for plutonium in various types of waste matrices were established by the waste-generating group, and approved by the LANL division office and the DOE Albuquerque Operations Office. Personnel were requested to sort potentially recyclable TRU waste items (i.e., those containing potentially recoverable amounts of plutonium) into classes such as rubber, plastics, rags, non-Pu metals, glass, oils, cans, sweepings, etc. These materials were then assayed. Based upon its plutonium level relative to the DL, material was either sent to recovery operations or to "20-year" retrievable storage. All liquids, including oils, were required to be sent to recovery operations for processing. Liquids were explicitly prohibited from any container of solid waste materials.

In 1984, a lab-wide TRU Waste Certification Plan was adopted for newly generated TRU waste (TWCP-697). Each LANL waste generator was required to develop an attachment to this plan to define the details of the waste certification functions and controls that applied to their specific processes and waste streams. TA-55 prepared an attachment in March 1987 for contact-handled combustible and noncombustible solid waste (TWCP-701), defined as follows:

- Combustible waste forms included materials that could be reduced to an ash if desired but that did not require further processing to meet

the combustible debris waste were ever incinerated. Since May 1992, leaded gloves have been routinely segregated from other metal debris waste and assigned to a separate leaded-glove waste stream.

3.4 Waste Volume and Time Period of Waste Generation

The following information is from Appendix D of the Sampling Plan (R.3). These inventories are expected to change because the Sampling Plan is continually updated as new waste information is obtained.

- TA-55-19 includes 4173 containers (873 cubic meters), that were generated from 1978 to the present time.

Make this an indented NOTE: (no other changes to text)

- Waste stream lot TA-55-19A is a subset of TA-55-19 that contains 12 containers (2.5 m^3) with waste items generated from P/S codes SD and SS between February and June 1998 ~~and packaged into drums that were closed by the end of 1998.~~
- TA-55-20 includes 281 containers (59 cubic meters), that were generated from 1979 to the present time.

3.5 Waste Stream Generation Processes

3.5.1 Overview

The TA-55-19 ~~-19A~~ and TA-55-20 combustible debris waste streams were generated from combustible materials used in processes to recover plutonium from residues, metal fabrication, and research and development (R&D) activities. The variety of plutonium handling operations includes:

- Preparing ultra-pure plutonium metals, alloys, and compounds
- Preparing (on a large scale) specific alloys, including casting and machining these materials into specific shapes
- Determining high-temperature thermodynamic properties of plutonium
- Reclaiming plutonium from scrap and residues produced by numerous feed sources
- Disassembling components for inspection and analysis
- Manufacturing of parts on a limited basis
- Processing mixtures of plutonium and uranium oxides for reactor fuels.

- on-going metal operations
- developmental metal operations
- reactor fuel development

The main goal of metal processes is to take the high purity metal produced by pyrochemical operations and produce shaped metal pieces. On-going metal operation processes include various R&D activities, alloy development, casting of metals, welding, coating, and machining/metalwork on various metals. Developmental metal operations include the Advanced Recovery and Integrated Extraction System (ARIES) project, assembly operations, burst testing of shells, experimental laser welding, furnace operations, and various other experimental activities. In reactor fuel development, enriched uranium oxide, depleted uranium oxide, and/or plutonium oxide feeds are blended and mixed with graphite, and various operations are performed to convert the feed material into pellets that can be used for fuel. Testing and R&D are done on the fuel pellets.

3.5.8 Pyrochemical Processes

P/S codes CRD, ER, MO, MP, Neptunium, OR, PK, PTP, RA, SCB, SD, SS, and SSMD

A detailed description of pyrochemical processes is found in *Process Acceptable Knowledge Summary Report for Pyrochemical Processes at TA-55* (TWCP-AK-2.1-006).

Pyrochemical processes include metal preparation, metal purification, and ancillary metal production operations. Pyrochemical process outputs are most often high-purity metal feed materials for metal operations.

3.5.8.1 Metal preparation processes include the following:

Metal Preparation Line. The metal preparation line produces plutonium metal from fluoride salts. Hydrogen fluoride gas reacts with plutonium oxides obtained from calcination of oxalate or peroxide precipitates from the aqueous nitrate or chloride process lines. The plutonium compound is further reacted with various chemicals to produce plutonium metal, which can then be recovered as a small globlue, or button, by breaking the crucible. globule

Direct Oxide Reduction (DOR). In the single pass DOR process, plutonium oxide and calcium metal are reacted in molten calcium chloride ($CaCl_2$), or $CaCl_2$ mixed with calcium fluoride (CaF_2), to produce plutonium metal. The

Table 1. Feed Materials for Processes Contributing to Waste Streams TA-55-19 and TA-55-20

Feed Material	Potential Presence of RCRA-Regulated Substances*	P/S Codes, Listed by Process
Analytical laboratory solutions	Potentially contaminated with RCRA-regulated constituents • All analytical laboratory solutions are potentially contaminated with chromium (D007), lead (D008), and mercury (D009) • CLS-1 solutions potentially contaminated with mercury (D009) and lead (D008), as well as RCRA-listed organic substances used as solvents, including acetone (F003), butyl alcohol (F003), carbon tetrachloride (D019), chlorobenzene (F002, D021), chloroform (D022), methanol (F003), methylene chloride (F002), tetrachloroethylene (F002, D039), xylene (F003) (Cl-25/TWCP-3547).	Chloride operations: CLS, CW, (analytical laboratory solutions from LANL Group CLS-1); CSE, CXL, SE (other solutions) Miscellaneous operations: ACL, ICP Nitrate operations: CF, HP
Anode heels	Typically contaminated with RCRA-regulated heavy metals cadmium (D006), chromium (D007), lead (D008), and silver (D011). Heavy metals arsenic (D004), mercury (D009), and selenium (D010) are not present because they are volatilized from the Pu oxide feed at the high temperatures to which this material is subjected in P/S codes ER, RM, and SS (electrorefining step).	Nitrate operations: AS, BF, BU Pyrochemical processes: RA
Ash from P/S codes ETD, IS, SB, TDC, or from other DOE facilities	Usually suspect contaminated with barium (D005), cadmium (D006), chromium (D007), lead (D008), and silver (D011). Arsenic (D004), mercury (D009), and selenium (D010) metals are volatilized at high temperatures if present in the oxide and chloride forms.	Miscellaneous operations: CK, CV, FDL, FLU, SO, XP Nitrate operations: AL, AT, ATL, ED, HGMS, IS, MPD, PTS, RC, SC HRA, Special processing: ACD, IAM, SB, SL
Crucible pieces (tantalum, magnesium oxide)	Typically fairly pure, no RCRA substances present	Chloride operations: CL Nitrate operations: MAS, SC Special processing: ACD, SL
Disassembled weapons components (pit diassembly)	High-purity Pu and U material types, no RCRA substances present	Metal operation processes: ARI, CA, PH, SRL Miscellaneous operations: EDC Nitrate operations: BM, RB, RBJ

Feed Material	Potential Presence of RCRA-Regulated Substances*	P/S Codes, Listed by Process
		Special processing: ACC (variable purity), PI (variable purity), PPD, POSM, RM, SB
Pu oxalates	Typically fairly pure, no RCRA substances present	Nitrate operations: CC, DF, HC
Pu oxides	Variable purity from P/S codes RB, RBJ and others, and from the vault; suspect contaminated with RCRA-regulated heavy metals cadmium (D006) chromium (D007), and lead (D008) High purity oxides from P/S codes CA, DO, and MA, and from the vault; may or may not contain RCRA substances	Metal operation processes: DOP (high-purity Pu and other radionuclides as oxides) Miscellaneous operations: CK, CV, EOC, EXT, FDL, FLU, IB, IE, LI, LIBS, SO, STF, VS, XP Nitrate operations: ATL, BL, CH, CPOD, DP, ED, FC, LC, MPD, OD, PT, RB, RBJ, SP, SSD, UPS, US, US2 HRA, Pyrochemical processes: MP (generally high purity), OR (variable purity), PTP Special processing: DO, PI, PX, POSM, RM
Pu-Be sources	High purity constituents, no RCRA-regulated substances	Chloride operations: PB, PUB
Pyrochemical salts	Typically fairly pure, no RCRA substances other than barium (D005) are present	Chloride operations: MB, MS, PRR Miscellaneous operations: EXT, IB Nitrate operations: COD, COL, MB Special processing: DO
Reactor fuel pellets	High purity Pu and U material types, no RCRA-regulated substances	Metal operation processes: ME
Stainless steel and/or tantalum residues from decladding of Pu-Be sources	High purity metals, potential leaching of chromium (D007) from stainless steel if subjected to strong acid	Chloride operations: PUB

* The information in this column is highly generalized. Applicability of specific HWNs to a process as a result of the feed material must be determined on a case-by-case basis because the presence and fate of contaminants is time and function dependent. These aspects are discussed in the process AK reports.

3.6.2 Radionuclide Content Identification

The primary Pu material type inputs for TA-55 processes are listed in Table 2. The designation *material type* (e.g., MT 52) is used within the DOE Complex to describe the isotopic composition of common blends of radioactive materials used within the Complex. The material type notation was developed because it is a convenient way to describe material types that have very consistent isotopic compositions. Table 2 indicates the isotopic composition of the material types at the time the waste was characterized.

The material type provides the basis for estimating an upper bound for U-234, U-235, and Am-241 contents based on the rate of decay of their precursors, Pu-238, Pu-239 and Pu-241, respectively. The purpose of such bounding calculations is to provide a basis for identifying significant enrichment or depletion of one radionuclide versus another, based on radioassays of individual waste containers (see Section 14). The results of these calculations are tabulated in the last three columns of Table 2; assume that (a) none of these isotopes were initially present in the material, (b) the oldest Pu material in inventory dates back to 1 January 1960, and (c) the waste was packaged on 1 January 1996, making it 36 years old at that time (TWCP-698).

⊙ The Calculations

TA-55 processes are not expected to alter the Pu isotopic ratios of the feed material. The material type used in the process generating each waste item was documented on the WODF and DWLS (examples shown in Attachment 4). However, other radionuclides will be present in most of the process wastes from decay of a Pu precursor or as a contaminant in the feed material:

- Np-237, the decay product of Am-241 (half-life, 458 yr), is expected to be present in minor amounts in most debris waste from processes at TA-55.
- In general, uranium and its isotopes are expected to be present only at trace levels, if at all, if the feed material did not purposely contain uranium. The primary uranium material type inputs for reactor fuel development activities and for pit disassembly at TA-55 are listed in Table 3.
- U-235 ingrowth from the decay of Pu-239 (half-life, 24,120 years) would be negligible due to the long half-life of Pu-239.

- U-234 would be present in MT 83 (and to a lesser extent in other Pu material types) as a decay product of Pu-238 (half-life, 87.74 years) (Table 2).

- Protactinium (Pa)-231, the decay-chain daughter of U-235, is expected to be present in trace amounts in some TA-55 wastes due to its widespread presence as a contaminant in TA-55 operations (TWCP-5164, TWCP-5165).

- Cs-137 is a product of the spontaneous fission of Pu-238, Pu-239 and especially Pu-240, as well as a trace contaminant in purified plutonium from the production reactors (TWCP-5164, TWCP-5165). In the latter case the remaining Cs could be on the order of 0.5 ng/g Pu. In the former instance the formation of Cs-137 due to spontaneous fission would lead to about 0.4 pg/g Pu in plutonium that is 10 years old. Because Cs-137 due to spontaneous fission is about a factor of a thousand less than that due to residual contamination from the original separation on the production fuel, the latter is the dominant source of Cs in TA-55 waste.

In general no correlation is expected to be seen among the different radioelements, Pu, Np, U, Pa or Am. The differences in valence states and chemical affinities among these elements is expected to result in substantial fractionation during several TA-55 processes, including ion exchange, solvent extraction, hydroxide precipitation, and dissolution.

Secondary radionuclides are also present in the waste due to processing of feed materials other than Pu (TWCP-698). Additional radionuclides expected to be present in each process were reviewed by a panel of experts at TA-55 and compiled in a memorandum according to P/S code (TWCP-882, amended by TWCP-5166), as summarized in Table 4. This list includes Am-241, Am-243, cerium (Ce)-144, curium (Cm)-244, Np-237, Pa-231, Pu-238, Th-230, Th-232, U-233, U-235, and U-238.

The possible presence of Cm-244 in TRU waste is of particular interest to radioassay operations because it can affect the choice of a radioassay instrument to use for optimal results. Cm-244 was introduced in TA-55 operations in P/S code DOP, which started in 1988 (TWCP-5165). Material outputs from this process sometimes were sent to P/S codes IS or WE. Cm-244 could also be part of debris waste under P/S code CA because both operations took place in the 300 Wing of PF-4. Because only one room in this area is available for bagouts, TRU waste from P/S codes

move lines from top of page 30 to break at end of a line

DOP and CA was sometimes combined. In addition, because rags from DOP were sent to IS, Cm-244 could be present in the ash produced by this operation, which is then processed through nitrate aqueous recovery operations. Some unknown fraction of the Cm-244 could ultimately end up in the evaporator bottoms, which are then immobilized in cement in P/S code CF. In any case, however, Cm-244 is not expected to be present in any waste generated before 1988.

During TWCP characterization, the contents of each waste package undergo non-destructive analysis to provide detailed radioisotopic data. These data are used to evaluate the accuracy of AK information in accordance with *Waste Characterization Data Reconciliation with Acceptable Knowledge* (TWCP-DTP-1.2-064). The assay results are summarized in Section 14.2.

3.6.3 Chemical Content Identification

Chemical contents of process inputs and outputs were compiled from chemical lists contained in procedures reviewed during the process AK search and from subject matter expert (SME) input. Individual process AK reports contain detailed assessments of these chemical inputs and of the applicability of EPA HWNs. In this section, discussion of chemical inputs are divided into the following categories:

- Acids and bases
- Gases and cryogenic fluids
- Metals
- Inorganic chemicals
- Organic chemicals

3.6.3.1 *Acids and bases*. Acids used in the TA-55 processes covered in this report are ascorbic acid, formic acid, hydrochloric acid, hydrofluoric acid, nitric acid, oxalic acid, perchloric acid, phosporic acid, stearic acid, sulfuric acid, and superacids (e.g., HSO_3F). Bases used in these processes are calcium hydroxide, magnesium hydroxide, potassium hydroxide, and sodium hydroxide. No EPA HWNs are applicable to the use of these chemicals in the TA-55 processes for the following reasons:

- D002 (corrosivity) and D003 (reactivity) do not apply to the solid debris waste because there are no free liquids in this waste.

- D002 and D003 also do not apply despite the possible production of perchlorate salts in perchloric acid solutions because:

move to end of section 3.6.3.5 (p. 37) [Change to text, not bullet] Keep here in section 3.6.3.1

- D001 (ignitability) and D003 (reactivity) do not apply to wastes in waste stream TA-55-19 (including TA-55-19A) despite the use of spent non-halogenated solvents (HWN F003) ~~and the possible production of perchlorate salts in perchloric acid solutions~~ for the following reasons:

move to end of bullet on previous page

  - Perchloric acid solutions are sent to cement fixation.
  - Perchlorate salts used in P/S code FF were sent to cement fixation (TWCP-5158).
  - Any perchlorate salts that might be present on rags are removed when the rags are rinsed before being discarded.
  - Solutions containing spent non-halogenated solvents are sent to the RLWTF if they are below the DL for plutonium.
  - Solutions containing spent solvents and above the DL for Pu are further treated by aqueous recovery processes as part of routine chloride and nitrate operations. Aqueous recovery involves dissolving any solid plutonium in hydrochloric or nitric acid, followed by ion exchange to extract the plutonium. The processed solutions are below the DL for plutonium and are either sent to the RLWTF or to the evaporator for volume reduction. Evaporator bottoms are fixed in cement, a waste form for which ignitability is not a concern.
  - Rags, if contaminated with spent solvents and above the DL for plutonium, are thermally decomposed, which destroys any organic component.
  - Although contaminated rags that are below the DL for plutonium are discarded as combustible debris, headspace gas analyses support the expectation that the solvents are below the limits established by the WIPP WAC. (see Section 14.4.)
  - In addition, 100 percent of the waste containers are subjected to headspace gas analysis. Any container showing values over 500 ppm total flammable volatile organic compounds (VOCs) is prohibited from being shipped to the WIPP. (For comparison, the explosive limit for acetone is 25,000 ppm.)

plutonium

move ~~copy~~ first TP of this bullet and ~~move to~~ these sub-bullets to end of section 3.6.3.5

silicon defoamer, sugar, surfactants, tetraethylamine hydrochloride, tetraethylamine hydroxide, tetraethylammonium hydroxide, Texaco Regal 32 oil (cutting oil), thionyl chloride, tributyl phosphate (TBP), tributyl phosphate (TBP)/Isopar (isoparaffinic hydrocarbon solvent), tributyl phosphate and iodine in kerosene, trioctylphosphine oxide (TOPO), urea, Vactra oil, vacuum grease, vacuum pump oil, WD-40, and Windex.

Insert text from page 31 (section 3.6.3.1) (do not make a bullet) the first sentence

Several organic chemicals used in TA-55 processes are identified in 40 CFR Part 261 or in Appendix VIII of that regulation as having hazardous characteristics. Table 6 lists these chemicals, their HWNs, P/S codes in which they were used, and the applicability of the HWNs to the use of these chemicals in TA-55 processes.

4.0 DIVISION OF THE WASTE STREAM INTO LOTS

Waste containers in a waste stream are characterized as a campaign, in which the targeted group of waste containers to be characterized are selected based on criteria such as availability of the waste containers, waste loading level, availability of waste generator records, and hazardous waste numbers. TA-55-19A is one subset (i.e., lot) of waste stream TA-55-19. Waste in this lot, which consists of 12 drums, is identical to the rest of the waste stream except for the possibility that the drums may contain vanadium pentoxide (EPA HWN P120), which was used only between 02/01/98 and 06/10/98 in two specific P/S codes. To be conservative, ~~drums~~ drums were assigned to this lot if they were closed as late as the end of 1998.

5.0 CORRELATIONS BETWEEN WASTE STREAMS

l.c.

Waste Streams TA-55-19 and TA-55-20 have been discussed together in this AK Summary Report. These waste streams are similar in physical form and waste material content. They differ only in that TA-55-19 is assigned EPA HWNs based on P/S code information, whereas TA-55-20 contains non-mixed waste.

Other waste streams resulting from the same plutonium processing activities at TA-55 but differing in physical form and waste matrix code are listed in the Sampling Plan. These include waste streams for more specific types of waste such as metal debris, glass, graphite, HEPA filters, and cemented waste, as well as less specific waste streams such as combustible/noncombustible debris.

conservative, this HWN is assigned to waste containers with packaging dates extending to the end of December 1998.

It is possible that waste generated under P/S codes AC, AC2, and SA may require the assignment of EPA HWN U213 (tetrahydrofuran). This possibility is being investigated.

Because waste items from any of these P/S codes may be present in any given container of combustible debris waste, waste stream TA-55-19 (including lot TA-55-19A) is conservatively assigned the F-listings of F001, F002, F003, and F005. TA-55-19A is segregated for waste with the P-listing of P120. Waste containers assigned to waste stream TA-55-20 only contain items with known P/S codes that do not carry any EPA HWNs.

The reliability of this AK information can be assessed in part based on a review of headspace gas analyses for containers assigned to waste stream TA-55-19 (Section 14.4).

8.2 Toxicity Listings

TA-55-19 (including TA-55-19A) is conservatively assigned the D-listings of D004, D005, D006, D007, D008, D009, D010, D011, D018, D019, D021, D022, D035, D038, D039, and D040.

TA-55-20 has no D-listings.

No D-listings are applicable to combustible debris waste generated by the following P/S codes: AC3 (inactive), ACC, AO (Assembly Operation), AO (Americium Processing Calcination), ARI, BA, BAC, BC, BL, BM, BT, CA, CC, CH, CN, CO, COD, CR, CRD, CT, DF, DP, DT, ELW, EM, EVAC, ~~FA, FC,~~ ITF7, FSPF, GI, GMS, HC, HG, HRS, ID, IN, ITF, ITF4, ~~JA, LC,~~ LIBS, MAG, MAS, MBC, MF, MO, MOX, MP, MW, NCD, NEPTUNIUM, NR, OB, OM, OR, OY, PA, PAF, PD, PF, PH, PI, PIG, PPD, PR, PS, RA, RAP, RAP2, RB, RBJ, RCM, RD, RFX, RL, RM, RS, SBB, SCB, SMP, SRL, SX, TIGR, UA, UPS, US, US2, VD, VP2, VS, WE,WLT, and ZD.

Based on information in the TA-55 process AK reports, combustible debris waste generated by the following P/S codes are conservatively assigned EPA HWNs due to the potential presence of D-listed constituents. In many cases, the applicability of the HWN is limited to waste generated during a specific period of time, as discussed in the appropriate process AK report. If a D-listed constituent is known to be present in the waste at some level, the D-code is conservatively assigned unless analytical data confirm that its concentration is below the regulatory level.

AC	D007, D009, D011, D018, D022, D038
AC1	D007, D009, D011, D018, D022

- Solutions containing spent non-halogenated solvents are sent to the RLWTF if they are below the DL for plutonium.

- If above the DL, the solutions are sent to aqueous processes as part of chloride or nitrate operations. Aqueous recovery steps include dissolution of any solid plutonium in hydrochloric or nitric acid, followed by plutonium recovery by ion exchange. The solutions are then below the DL and are either sent to the RLWTF or to the evaporator.

- Rags that are above the DL for plutonium are thermally decomposed, which destroys any organic component.

- Rags that are below the DL for plutonium are discarded as combustible debris, but headspace gas analyses support the contention that the solvents are below ~~regulatory~~ the limits established by the WIPP WAC (Section 14.4).

- Finally, 100 percent of the drums are subjected to headspace gas analysis, and drums showing over 500 ppm total flammable VOCs are prohibited from being shipped to the WIPP. (This limit is quite conservative. For comparison, the explosive limit for acetone by itself is 25,000 ppm.)

The absence of these prohibited items is verified through radiography of each waste container and visual examination of selected containers during TWCP characterization activities. Any free liquids are absorbed onto vermiculite and discarded in an appropriate waste stream and containerized gases that are found to be present are removed, or the container is tagged as non-compliant by filing a Prohibited Waste Report in accordance with *Nonconformance Reporting and Tracking* (TWCP-QP-1.1-007).

10.0 VERIFICATION THAT INCOMPATIBLE CHEMICALS WERE PROHIBITED

Controls are in place to ensure chemical compatibility for the waste contents and the TRUPACT-II shipping containers. Section 9.0 summarizes administrative controls in place at TA-55 that prohibit incompatible chemicals in the waste and measures taken to verify their absence. In addition, all waste containers shipped from TA-55 to TA-54 for storage were evaluated for potentially incompatible chemicals in accordance with 49 CFR Subpart C—Segregation and separation chart of hazardous materials; Section 177.848, Segregation of hazardous materials, and were determined to be in compliance with this requirement.

For waste that has been generated after the implementation of the 1987 Certification Plan, Generator Attachments, waste generators signed a statement on the WODF for each waste item specifying that the waste contained "no free liquids, pyrophorics, explosives, compressed gases, powders or materials other than the indicated matrix." Prior to the installation of the Impact Test Facility in the early 1990s, explosives were prohibited from TA-55. In addition, waste management inspectors performed visual inspection of

the waste prior to its initial packaging, thus allowing the inspectors to verify the generator's WODF statement.

A chemical compatibility analysis was performed for TRUCON codes 116/216 (combustible waste) which indicated that all chemicals and the waste matrix were compatible at levels greater than trace amounts (*Content Code Assessments for LANL TRUCON Codes* [DOE/WIPP-89-004]). During the process AK search, additional chemicals were identified that necessitated a new compatibility analysis, which is underway at the present time.

11.0 VERIFICATION THAT THERE ARE NO COMPRESSED GASES, FREE LIQUIDS, NONRADIONUCLIDE PYROPHORICS, SEALED CONTAINERS GREATER THAN FOUR LITERS IN VOLUME, OR >1% RADIONUCLIDE PYROPHORICS

Most gases used at the TA-55 Plutonium Facility are stored outside the building and the gas is plumbed into the glovebox from outside the building (TWCP-4164). Occasionally, a lecture bottle may have been used for a process inside the building, but these bottles were kept outside of the glovebox with the gas plumbed into the glovebox. Consequently, compressed gas cylinders or containers are not expected to be in any of the TRU wastes generated by TA-55 operations.

Spray cans, especially WD-40, were in common use in TA-55 gloveboxes until May 1992 (TWCP-4166). These were routinely discarded as metal debris waste. From 1988 until May 1992, the protocol was to vent or puncture the spray cans inside the glovebox; venting was indicated by inserting a metal wire into the valve. After May 1992, spray cans were no longer used in gloveboxes.

Verification that individual waste drums do not contain compressed gases, free liquids, or sealed containers greater than 4 L in volume is obtained from radiography of each waste container and visual examination of selected containers during TWCP characterization activities. Any free liquids are absorbed and any sealed containers greater than 4 L in volume, or unpunctured or unvented gas containers, are removed, or the container is tagged as non-compliant by filing a Prohibited Waste Report in accordance with *Nonconformance Reporting and Tracking* (TWCP-QP-1.1-007).

The effectiveness of
l.c.
Administrative and procedural controls on the prohibit~~ed~~ion of pyrophorics in TRU waste[~~and the absence of pyrophorics~~] has been verified through testing. For items of pyrochemical salt waste, the procedures of oxygen sparging and/or carbonate oxidation have been used since May 1987 to ensure that pyrophorics were oxidized. In addition, screening tests on similar pyrochemical salts and residues (which contain higher amounts of plutonium) at the RFETS (TWCP-2501) have shown (1) no autoignition, (2) no spontaneous combustion, and (3) no sparking. Experimental results on the reactivity of direct oxide reduction (DOR) salt with water and the reactivity in air of heated calcium metal nodules

boxes may be sorted to remove the "hot" item, or the whole box may be bagged and sent to the TRU packaging area for placement in drums containing waste streams TA-55-19 or TA-55-20, as appropriate. When this occurs, the P/S code WM is assigned to the waste. Due to the additional layers of plastic that are present when this operation occurs, drums with the P/S code WM are assumed to contain up to two more layers of internal packaging than other drums.

Waste drum packaging procedures for waste streams TA-55-19 and TA-55-20 have been modified several times since the beginning of operations at TA-55. TRUCON Code assignments made by the waste generator are compiled in the Sampling Plan; however, when TRUCON codes are absent, they will be assigned to the waste container in accordance with the default packaging configurations and associated TRUCON codes shown in Table 7 that reflect the packaging protocols in effect during different periods of time at TA-55 (TWCP-816).

AK information has been compared with visual examination data for about 22 containers in waste streams TA-55-19 and TA-55-20, in accordance with *Reconciliation of Visual Examination and Radiography Information* (TWCP-QP-1.1-028). In two cases, the number of layers of packaging observed during visual examination was greater than the number of layers reported by the waste generator, and an incorrect TRUCON code was assigned by the waste generator (Section 14.2). It is possible that the extra plastic layers were breached ~~(i.e., these were~~ confining layers~~)~~, but that the VE inspection did not note ~~document~~ this fact. However, the conservative conclusion is that these discrepancies indicate that TRUCON code assignments by the waste generator must be viewed with caution. Consequently, the most conservative TRUCON code is assigned to each waste container in waste streams TA-55-19 and TA-55-20, in accordance with the following guidance:

— in which case they would not be

a) The default TRUCON codes from Table 7 ~~are~~ is assigned if the waste generator has not assigned a TRUCON code.

b) The TRUCON code assigned by the waste generator is used only if it has been positively confirmed by RTR or VE data.

c) If no VE data are available, and if the RTR data are indeterminate, then the default TRUCON code is assigned to the container.

This guidance only applies to retrievably stored waste. It is assumed that newly generated waste packaged under procedures approved by TWCP and CBFO are assigned correct TRUCON codes.

14.0 CONFIRMATION OF AK INFORMATION FOR THE WASTE STREAM

Characterization data acquired by WAP-compliant activities provide a means to confirm AK information. Radiography, radioassay, and headspace gas analysis are conducted on all retrievably stored containers of debris waste, and VE is being conducted on at least 50

Table 7. Maximum Layers of Confinement to Be Used for TA-55-19 and TA-55-20 Waste Containers in the Absence of More Specific Waste Characterization Data

Time Frame	P/S Code	Layers of Confinement[a]	TRUCON Code
01/78–05/87	All	Maximum of 6 layers: • up to 4 inner bags • up to 2 liner bags • all bag closures by either twist & tie; or twist, tie & tape	LA 116 I
05/87–12/97[b]	All except WM, XO, X0	Maximum of 4 layers: • up to 2 inner bags • 2 liner bags • bag closures by either twist & tie; twist, tie & tape, folded and taped, or folded **NOTE:** Folded and taped bags and folded bags do not constitute layers of confinement	LA 116 A
05/87–present	WM, XO, X0	Maximum of 6 layers: • up to 4 inner bags • 2 liner bags • bag closures by either twist & tie; twist, tie & tape, folded and taped, or folded **NOTE:** Folded and taped bags and folded bags do not constitute layers of confinement	LA 116 I
01/98–present	All except WM, XO, X0	Maximum of 1 layer: • 1 carbon-filter vented inner bag (if initial bag is breached, bag is placed in second bag and first bag is slit open), closed by either twist & tie; or twist, tie & tape • 2 liner bags, folded, no closure	LA 116 E

Superscript

a Layers of confinement for these TRUCON Codes are defined in DOE/WIPP-89-004.

b In Rev 1 of this AK report, LA116A was applicable from 5/87 until 1/97. Its applicability was extended to the end of 1997 in Rev 2 (the current revision) because of inconsistencies found during reconciliation of VE data (Section 14.2).

containers from waste streams TA-55-19 and TA-55-20. Relevant aspects of the data produced by these activities are summarized in the sections below, focusing on the extent to which the data confirm AK information.

14.1 Radiography Data

Radiography data are examined to confirm AK information about WMC assignments, layers of packaging, absence of prohibited items, and relative volumes or weights of waste matrix parameters for a waste stream. The WMC for waste streams TA-55-19 and TA-55-20 is S5300 (combustible debris). Thus far, 265 containers, or about 6 percent of the 4454 containers in these two waste streams (Sampling Plan, Revision 3), have undergone RTR, with the data contained in WIPP-compliant batch data reports. The following observations are made from an examination of these data, as summarized in Table 8 and 9:

- confirmation of WMC S5300 for 98.9 percent of the drums examined
- identification of WMC discrepancies for 3 containers (1.1 percent of the drums examined), which must be reassigned to other waste streams
- identification of potentially sealed containers > 4 liters in 13 percent of the drums, for which PWRs were submitted
- confirmation of the absence of any other prohibited item or condition requiring a PWR
- confirmation of 4 or fewer packaging layers for 52 percent of the drums; Plastic packaging layers for the remaining 48 percent were indeterminate due to the large number of horsetails present in the drums
- confirmation of the waste stream description
- 97 percent of the drums contain more than 75 wt. % combustible waste
- 86 percent of the drums contain less than 5 wt. % metal waste, and 94 percent contain less than 10 wt. % metal waste.

  Note: TA-55 waste generators followed guidance that metal cans used to contain debris were to be considered as packaging, and not as waste. This may account for the drums of combustible debris that were estimated by RTR to contain more than the expected 5 wt. % metal waste.

Changes in waste stream assignment because of characterization data are documented in accordance with *Waste Characterization Data Reconciliation with Acceptable Knowledge* (TWCP-DTP-1.2-064).

Table 8. RTR Data for Waste Streams TA-55-19 and TA-55-20

Evaluated Waste Characteristic	Number of Drums			
WIPP-compliant RTR data				
• TA-55-19	245	out of	4173	6% of waste stream
• TA-55-20	20	out of	281	7% of waste stream
WMC discrepancies				
• TA-55-19	3	out of	245	1% of drums examined
• TA-55-20	0	out of	20	0% of drums examined
Excluding drums with confirmed WMC discrepancy				
Free liquids (no PWR required; all <1" of container or <1% of drum)	34	out of	262	13 % of drums examined
Sealed containers > 4L (PWR required)	31	out of	262	13 % of drums examined
Pressurized containers	0	out of	262	0 % of drums examined
Unpunctured liner	0	out of	262	0 % of drums examined
Other prohibited items	0	out of	262	0 % of drums examined
Excluding drums with PWRs				
Proportion of combustible waste in drum (wt. %)				
• Less than 25	0	out of	231	0 % of drums examined
• 25 to 50	1	out of	231	< 1 % of drums examined
• 50 to 75	7	out of	231	3 % of drums examined
• More than 75	223	out of	231	97 % of drums examined

Data sources: RTR batch data reports TWCP-4019, 4020, 4021, 4080, 4219, 4399, 4400, 4457, 4458, 4459, 4464, 4471, 4542, 4543, 4544, 4545, 4566, 4570, 4572, 4573, 4574, 4577, 4721, 4797, 4835, 5110, 5121, 5147; RTR batch data report ~~(in Project level review)~~ LA01-RTR-006.

awaiting review and approval by Carlsbad [Area] Field Office (CBFO).
?

Table 9. RTR Packaging Data for Waste Streams TA-55-19 and TA-55-20

Maximum Number of Layers	Metal Layers	Plastic Layers	Number of Drums		
Less than or equal to 1	0	1	2	out of 231	1% of drums
Less than or equal to 2	0	2	21	out of 231	9% of drums
Less than or equal to 3	0	3	95	out of 231	41% of drums
Less than or equal to 4	1	3	2	out of 231	1% of drums
Less than or equal to 5	None observed		0	out of 231	0% of drums
Less than or equal to 6	None observed		0	out of 231	0% of drums
~~Total~~ Number of Layers	0	Indeter	109		
~~Indeterminant due to~~ number of plastic horsetails:	1	Indeter	2		
	Subtotal		111	out of 231	48% of drums

Data sources: RTR batch data reports TWCP-4019, 4020, 4021, 4080, 4219, 4399, 4400, 4457, 4458, 4459, 4464, 4471, 4542, 4543, 4544, 4545, 4566, 4570, 4572, 4573, 4574, 4577, 4721, 4797, 4835, 5110, 5121, 5147; RTR batch data report ~~(in Project level review)~~: LA01-RTR-006.

awaiting review and approval by CBFO:

bold "Indeterminate"

Stet

~~insert new column labeled~~ ~~Total~~ Layer

1
2
3
4

Table 10. VE Data for Waste Streams TA-55-19 and TA-55-20

Characterization Data	Number of Containers				Comments
	AK[a]		RTR	VE	
Waste Matrix Code					
S5000	—		—	—	Positive confirmation of AK WMC by RTR and VE for 22 drums
S5300	22		22	8	
S5310	—		—	14	
Maximum number of layers and associated TRUCON codes	Default[a]	Assigned in SP	b		Number of confining layers • AK and VE match for 3 drums • AK more conservative than VE for 14 drums • AK from waste generator was less conservative than VE for 5 drums
0 LA116G	—	—		—	
1 LA116C, E, F	—	6		2	
2 LA116B, D	—	—		2	
3 None	—	—		9	
4 LA116A	4	4		8	
5 LA116H	—	—		1	
6 LA116I	8	—		—	

SP—Sampling Plan (Rev 3)

Notes:

Superscript

a AK information for WMC and TRUCON code assignments is from the Sampling Plan, Rev 3. If no TRUCON code was assigned, then the default code was determined from Table 6 in TWCP-AK-2.1-008 (Rev 1), using AK information on packaging dates and P/S codes as documented in the Sampling Plan.

b RTR data indicated no metal packaging layers for any of these drums, which was consistent with AK information and confirmed by VE. The number of plastic packaging layers was indeterminate by RTR except for one drum with three layers, which was consistent with the default TRUCON code and confirmed by VE (TWCP-4393).

Data sources: VE batch data reports TWCP-3947, 3948, 3949, 3950, 3951, 4022, 4326, 4327, 4392, 4393, 4394, 4427, 4800, 5077, 5083, 5084, 5085, 5112, 5115, 5120, 5173; VE batch data report in Project-level review: LA00-3.4.1-005.

Table 11. Radioassay Data for Waste Streams TA-55-19 and TA-55-20

Radionuclide Characteristics	Number of Drums	Comments
Pu isotopic fractions		Dominant isotope is Pu239 in all drums
• Pu238 / total Pu	22	0.010 to 0.069 wt %
• Pu239 / total Pu	22	91.1 to 94.1 wt %
• Pu240 / total Pu	22	5.7 to 8.5 wt %
• Pu241 / total Pu	22	0.14 to 0.32 wt %
• Pu242 / total Pu	22	0.009 to 0.055 wt %
Material type		
• MT52	19	
• MT53	2	
• MT52/53 mix	1	
Total Pu mass, expressed as ratio of AK data to NDA data		AK data from Sampling Plan (Rev 3) AK/NDA ratios range from 0.6 to 1.4
• AK/NDA < 0.7	1	
• 0.7 < AK/NDA < 1.3	17	
• AK/NDA > 1.3	4	
Other actinides present at detectable levels (uncertainties ≤ 21.5%)*		*Range of ratios of nuclide to total Pu* Measured ratios / Calculated upper bound (Table 2)
• Am241	22	1×10^{-3} to 9×10^{-3} / 2×10^{-3} to 3×10^{-3}
• Am243	22	4×10^{-7} to 4×10^{-6} / Not applicable
• Np237	22	2×10^{-4} to 1×10^{-2} / Not applicable
• U234	21	7×10^{-3} to 6×10^{-2} / 2×10^{-5} to 2×10^{-5}
• U235	5	3×10^{-3} to 5×10^{-2} / 9×10^{-4} to 1×10^{-3}
• U238	0	No measurable U238 / Not applicable
Other radionuclides present at detectable levels (uncertainties ≤ 21.5%)*		Th232 is not detectable by the methods used
• Cs137		
• Pa231(uncertainty <21.5%)	16	
• No other detectable nuclides	9	
	2	
Ratio of measured ratio (Am241/Total Pu) to calculated upper bound (0.002, Table 2)		
• Ratio < 1	2	Am241 could be from decay of Pu241
• 1 < ratio < 2	7	Process waste probably enriched in Am241
• 2 < ratio < 3	7	Process waste enriched in Am241
• Ratio > 3	6	Process waste enriched in Am241

P/S codes for waste items present in these drums (TWCP-5086). The number of drums containing waste items from each code is given in parentheses, if more than one.

- Chloride operations — CSE, CW, CX (3), CXL (7), MB, MS
- Metal operations — CA (2), FF, MA, MW, PH, SRL
- Miscellaneous operations — AD (2), CV, IB (5), ME, WM (3), XP
- Nitrate operations — ATL, BM (4), COD, DS (3), ED (7), EV (4), HCD, LR (4), MAG, NC (6), NL (2), OD, PR (2), RBJ, RR (2), SC (8), SP (4), SSD
- Pyrochemical operations — ER (3), MO, OR (3), SS (3)
- Special processing — None

NDA—nondestructive assay MDL— method detection limit

Data sources: Radioassay batch data reports TWCP-4009, 4023, 4024, 4025, 4052, 4078, 4158, 4159, 4212, 4225, 4226, 4303; and Sampling Plan (Rev 3). P/S codes from TWCP-5086 and TWCP-5163.

*The rationale for this MDL cut off (21.5% uncertainty) is given in TWCP-2130.

concentration of potentially flammable VOCs for this set of 55 drums was 128 ±101 ppmv, with a maximum of 473 ppm (TWCP-4722). No methane was detected in any of the drums, and hydrogen concentrations were lower by more than an order of magnitude than the WAC limit of 5 percent.

In conclusion, the headspace gas data confirm the presence of VOCs in waste stream TA-55-19. All VOCs present were expected based on AK. However, no correlation is seen between the presence and absence of a specific VOC and its documented use in a process known to have contributed waste placed in a particular drum. For example, about 60 percent of the containers show measurable concentrations of acetone and/or toluene in the headspace gas, and 20 percent contain methylene chloride, but less than half of the drums in which these chemicals are present contain waste items generated by activities that were known to have used these chemicals. The most plausible explanation is that acetone, toluene, and methylene chloride are present as solvents used in the manufacturing of plastics. Radiolytic degradation of the plastic polymers may also be a contributing factor.

15.0 CITED PROCEDURES AND REQUIREMENTS DOCUMENTS

- 40 CFR Part 261—Identification and Listing of Hazardous Wastes
- 49 CFR Subpart C—Segregation and separation chart of hazardous materials. Section 177.848, Segregation of hazardous materials
- *Acceptable Knowledge Documentation* (TWCP-QP-1.1-021)
- *Hazardous Waste Facility Permit Issued to the Waste Isolation Pilot Plant* (EPA No. NM4890139088) (Attachment B, Waste Analysis Plan)
- *NIOSH Pocket Guide to Chemical Hazards* (1997). National Institute for Occupational Safety and Health (NIOSH) Publication #97-140.
- *Nonconformance Reporting and Tracking* (TWCP-QP-1.1-007)
- *Reconciliation of Visual Examination and Radiography Information* (TWCP-QP-1.1-028).
- *Transuranic Package Transporter (TRUPACT)-II Content Codes* (DOE/WIPP-89-004)
- *Waste Analysis at Facilities that Generate, Treat, Store and Dispose of Hazardous Waste* (EPA)
- *Waste Characterization Data Reconciliation with Acceptable Knowledge* (TWCP-DTP-1.2-064)

SIMPLIFIED PROCESS FLOW DIAGRAMS

SIMPLIFIED PROCESS FLOW DIAGRAM FOR CHLORIDE OPERATIONS

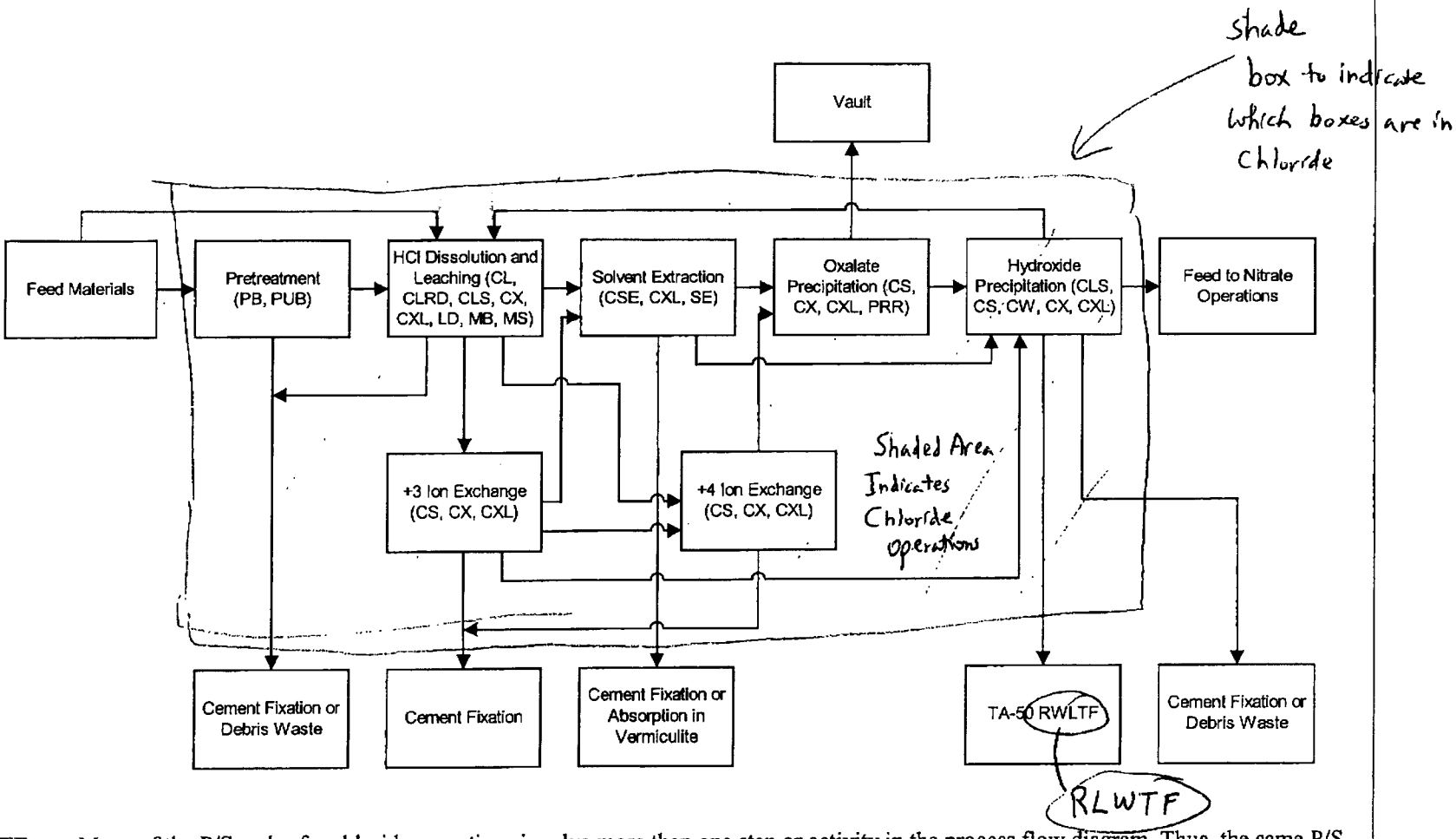

NOTE: Many of the P/S codes for chloride operations involve more than one step or activity in the process flow diagram. Thus, the same P/S code can appear in more than one box on the process flow diagram.

P/S Code	P/S Name	AK Process Report and Primary Report Section in which P/S Code is Described*		RCRA Listings for Combustible Debris
FX	Cement to drum	Nitrate Operations	3.5.6, Att. 4	D006, D007, D008, D009, D011
GI	Pellet grinding & inspection	Metal Operation Processes	3.5.1, Att. 4	
GMS	Open gradient magnetic separation	Nitrate Operations	3.5.1, Att. 4	
HC	Calcination	Nitrate Operations	3.5.3, 3.5.6, Att. 4	
HCD	Hydroxide cake dissolution	Nitrate Operations	3.5.2, Att. 4	D006, D007, D008, D009, D011
HD	Hydroxide cake dissolution	Nitrate Operations	3.5.2, Att. 4	D006, D007, D008, D009, D011
HG	Pu removal by mercury	Metal Operation Processes	3.5.2, Att. 4	
HGMS	High gradient magnetic separation	Nitrate Operations	3.5.1, 3.5.6, Att. 4	D006, D007, D008, D009, D011
HP	Cement fixation	Nitrate Operations	3.5.5, Att. 4	D007, D008, D009, D011, D019, D021, D022, D039, F002, F003
HRA	Hanford Reservation Material	Nitrate Operations	3.5.6, Att. 4	D004 D005, D006, D007, D008, D009, D011
HRS	High resolution spectroscopy	Miscellaneous Operations	3.5.5, Att. 4	D010
IA	Impure americium holding for discard	Nitrate Operations	3.5.5, 3.5.6, Att. 4	D006, D007, D008, D009, D011
IAM	Inspection and measurement	Special Processing	3.5.1, Att. 4	D005, D006, D007, D008, D011
IB	Matrix study of pyrochemical salts	Miscellaneous Operations	3.5.6, Att. 4	D005, D006, D007, D008, D009, D011
ICP	ICP-AES analysis	Miscellaneous Operations	3.5.4, Att. 4	D007, D009
ID	Immersion density	Metal Operation Processes	3.5.1, Att. 4	
IE	Isotope enrichment	Miscellaneous Operations	3.5.2, Att. 4	D005, D006, D007, D008, D009, D011
IN	Inspection	Metal Operation Processes	3.5.2, Att. 4	
IS	Incinerator	Nitrate Operations	3.5.1, Att. 4	D005, D006, D007, D008, D011
ITF	Impact test facility	Metal Operation Processes	3.5.2, Att. 4	
ITF4	Impact test facility	Metal Operation Processes	3.5.2, Att. 4	
ITF7	Impact test facility	Metal Operation Processes	3.5.2, Att. 4	
IX	Ion exchange	Special Processing	3.5.2, Att. 4	D006, D007, D008, D009, D011
JA	Gas isostatic press	Metal Operation Processes	3.5.2, Att. 4	
KBTF	Kolsky bar test facility	Metal Operation Processes	3.5.3, Att. 4	D008
LC	Uranium plutonium processing	Nitrate Operations	3.5.2, 3.5.6, Att. 4	

EDC	D007~~, D008~~
EL	D040
EOC	D007, D009
ER	D006, D008
ETD	D005, D006, D007, D008, D011
EV	D006, D007, D008, D009, D011
EXT	D005, D006, D007, D008, D009, D011
FDL	D004, D005, D006, D007, D008, D009, D010, D011
FF	D022, D040
FLU	D004, D005, D006, D007, D008, D009, D010, D011
FX	D006, D007, D008, D009, D011
HCD	D006, D007, D008, D009, D011
HD	D006, D007, D008, D009, D011
HGMS	D006, D007, D008, D009, D011
HP	D007, D008, D009, D011, D019, D021, D022, D039
HRA	D004, D005, D006, D007, D008, D009, D011
IA	D006, D007, D008, D009, D011 D010,
IAM	D005, D006, D007, D008, D011
IB	D005, D006, D007, D008, D009, D011
ICP	D007, D009
IE	D005, D006, D007, D008, D009, D011
IS	D005, D006, D007, D008, D011
IX	D006, D007, D008, D009, D011
KBTF	D008
LD	D007, D008, D009
LG1	D006, D008
LG2	D006, D007, D008, D009, D011
LI	D005, D006, D007, D008, D009, D011
LR	D006, D007, D008, D009, D011
MA	D035, D040
MB	~~D005,~~ D007, D008, D009
ME	D007, D040
MELL	D006, D007, D008, D009, D011
ML	D006, D008
MPD	D005, D006, D007, D008, D011
MS	D007, D008, D009
NC	D006, D008
NL	D006, D008
OD	D006, D007, D008

Add cover page for Appendix? to match TOC

Los Alamos
NATIONAL LABORATORY

TRU WASTE STORAGE RECORD

LA00000056636

1. GENERATOR'S PRE-USE VISUAL INSPECTION

Purchase Order #	Inspected Items		
This container has been visually inspected according to approved procedures and has been found to be free of damage that would make it unsuitable for TRU waste packaging.	[X] Ring, Bolt, and Nut	[X] Chime	[X] Dents
	[X] Lid and Gasket	[X] Gouges	[X] Paint
Name TRUJILLO MICHAEL C	Znumber 098605		Date JUL 30 1997

2. GENERATOR'S PACKAGE INFORMATION

Group NMT-7	Technical Area 55	Building PF-4	Program Code 8J0700 KF14 1000 0000		[ ] Off-Normal
Additional Information TIO 826672			RADIONUCLIDE CONTENT		
			Nuclide	Amount	Uncertainty	C=Curie M=Gram
			PU-238	6.007E-3	5.136E-4	M
CONTAINER	LINER		PU-239	5.633E+1	4.816E+0	M
[X] Steel Drum (55 gal.)	[X] None		PU-240	3.604E+0	3.082E-1	M
[ ] Steel Drum (85 gal.)	[ ] 80 mil liner		PU-241	1.201E-1	1.027E-2	M
[ ] Standard Waste Box	[ ] 125 mil liner		PU-242	1.201E-2	1.027E-3	M
[ ] RH Canister	INTERNAL SHIELDING		AM-241	9.551E-2	8.166E-3	M
[ ] Other (Call TWCO)	[X] None					
[ ] Overpack	Type	Thickness (in.)				
Carbon Filter ID 01 1576						
Carbon Filter ID 02						
Waste Profile Request Number 20309						
Process Batch Code NA			[ ] PDP Program Tracking No:			
Gross Weight (lb.) 1.12E+2			NONRADIOACTIVE HAZARDOUS MATERIALS			
Net Weight (lb.) 4.88E+1			Name	EPA Code	Quantity (g)	
Shipping Category 3003400280			None			
LANL Waste Stream ID TA-55-3						
TRUCON Code 118C						
Date Closed (MMDDYY) AUG 4 1997			Accumulation Start Date (MMDDYY)			
The data in this section were collected, and the waste described herein was packaged and labeled according to approved procedures.						
Name VIGIL ROBERT A			Znumber 091564		Date AUG 11 1997	

3. GENERATOR SITE HEALTH PHYSICS INFORMATION

Gamma Dose Rate (mrem/h) (contact)	8.0E+1	Survey Date AUG 6 1997	Survey Meter Model RO20	Property Number 006487	Calibration Due Date SEP 13 1997
Neutron Dose Rate (mrem/h) (contact)	1.3E+0	Survey Date AUG 6 1997	Survey Meter Model PNR-4	Property Number 004906	Calibration Due Date OCT 2 1997
Total Dose Rate (mrem/h) (contact)	8.1E+1				
Total Dose Rate (mrem/h) (1 meter)	8.8E+0	The data in this section were collected according to approved procedures.			
Alpha Contamination (dpm/100cm^2) (rem)	-0.0E+0	Name CHAVEZ RONALD			
Beta-Gamma Cont. (dpm/100cm^2) (rem)	0.0E+0	Znumber 112026		Date AUG 11 1997	

Form 1562E (7/97) Printed AUG 28 97 11:38:48 by BUSTAMANTE J M Page 1 of 2

Modifications to Computer Generated Data Invalidate this Form

SIMPLIFIED PROCESS FLOW DIAGRAM FOR METAL OPERATIONS

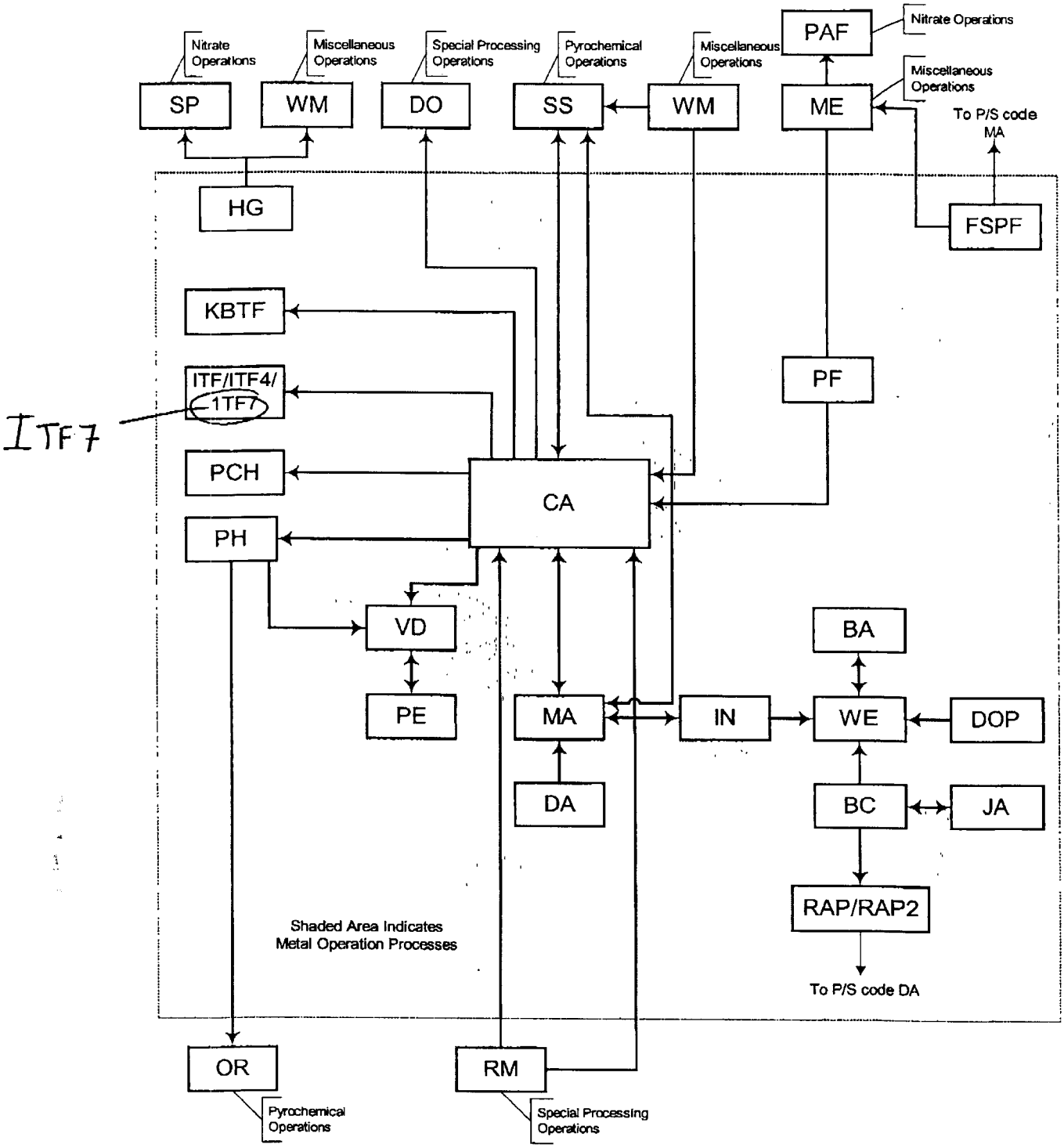

NOTE: All of these P/S codes may obtain feed material from or send product output to the vault.

CONTENTS

Section **Page**

ACRONYMS v

TA-55 PROCESS/STATUS CODE INDEX vii

ACCEPTABLE KNOWLEDGE SUMMARY ..... xvi, xix

WASTE GENERATION SUMMARY DIAGRAM ..... ~~xviii~~ xxv xxii

1.0 INTRODUCTION 1

2.0 METHODOLOGY USED TO SEARCH FOR AK RECORDS 1

3.0 DESCRIPTION OF THE WASTE STREAM 3
- 3.1 Facility and Mission 3
- 3.2 Basis, Rationale, and Assumptions Used to Delineate the Waste Streams 3
- 3.3 Waste Physical Form and Content Description ..... ~~4~~ 7
- 3.4 Waste Volume and Time Period of Waste Generation ..... ~~4~~ 8
- 3.5 Waste Stream Generation Processes ..... ~~4~~ 8
- 3.6 Material Inputs to the Waste Generation Processes ..... ~~18~~ 22

4.0 DIVISION OF THE WASTE STREAM INTO LOTS ..... ~~31~~ 38

5.0 CORRELATIONS BETWEEN WASTE STREAMS ..... ~~31~~ 42

6.0 ASSIGNMENT OF WASTE MATRIX CODES ..... ~~31~~ 42

7.0 ASSIGNMENT OF WASTE MATERIAL PARAMETER CODES ..... ~~33~~ 42

8.0 ASSIGNMENT OF EPA HAZARDOUS WASTE NUMBERS ..... ~~34~~ 43
- 8.1 F, K, P, and U Listings ..... ~~34~~ 43
- 8.2 Toxicity Listings ..... ~~35~~ 44

9.0 VERIFICATION THAT IGNITABLE, REACTIVE, AND CORROSIVE WASTES WERE EXCLUDED ..... ~~40~~ 40

10.0 VERIFICATION THAT INCOMPATIBLE CHEMICALS WERE PROHIBITED ..... ~~41~~ 49

11.0 VERIFICATION THAT THERE ARE NO COMPRESSED GASES, FREE LIQUIDS, NONRADIONUCLIDE PYROPHORICS, SEALED CONTAINERS GREATER THAN FOUR LITERS IN VOLUME, OR >1% RADIONUCLIDE PYROPHORICS ..... ~~42~~ 50

12.0 VERIFICATION THAT THERE ARE NO POLYCHLORINATED BIPHENYLS (PCBs) IN THE WASTE STREAM ..... ~~42~~ 51

13.0 DETERMINATION OF THE MAXIMUM NUMBER OF CONFINEMENT LAYERS PERMITTED FOR WASTE PACKAGING ..... ~~43~~ 52

14.0 CONFIRMATION OF AK INFORMATION FOR THE WASTE STREAM 54

15.0 CITED PROCEDURES AND REQUIREMENTS DOCUMENTS ..... ~~45~~ 66

14.1 Radiography Data 54
14.2 VE Data ..... ~~56~~ 57
14.3 Radioassay Data 58
14.4 Headspace Gas Data 63

Tables **Page**

1 Feed Materials for Processes Contributing to Waste Streams TA-55-19 and TA-55-20 ..... ~~19~~ 24
2 Average Isotopic Content of Plutonium Material Types and Enrichments ..... ~~23~~ 28
3 Average Isotopic Content of Uranium Material Types and Enrichments ..... ~~23~~ 28
~~4~~ 5 Use of RCRA-Regulated Inorganic Chemicals in TA-55 Processes ..... ~~30~~ 37
~~5~~ 6 Use of RCRA-Regulated Organic Chemicals in TA-55 Processes ..... ~~32~~ 40
~~6~~ 7 Maximum Layers of Confinement for be Used for TA-55-19 and TA-55-20 Waste Containers in the Absence of More Specific Waste Characterization Data ..... ~~44~~ 53
~~7~~ 8 RTR Data for Waste Streams TA-55-19 and TA-55-20 55
9 RTR packaging data for waste streams TA-55-19 and TA-55-20 56
10 VE Data for Waste Streams TA-55-19 and TA-55-20 60
11 ~~8~~ Radioassay Data for Waste Streams TA-55-19 and TA-55-20 61
~~10~~ 12 Headspace Gas Data for Target Analytes in Waste Stream TA-55-19 64
13 ~~11~~ Headspace Gas Data for Flammable VOCs, Hydrogen and Methane in Waste Stream TA-55-19 67

Attachments

1 Acceptable Knowledge Roadmap (11 pages)
2 LANL and TA-55 Site Maps (2 pages)
3 Simplified Process Flow Diagrams (8 pages)
4 Waste Generator Forms for TRU Waste (5 pages)
5 Chemical Waste Disposal Request Form (1 page)

4. Secondary Radionuclides in TA-55 TRU Waste 31

- Preparation of ultra-pure plutonium metals, alloys, and compounds
- Preparation of specific alloys, including casting and machining these materials into specific shapes
- Determination of the high-temperature thermodynamic properties of plutonium
- Reclamation of plutonium from scrap and residues produced by numerous feed sources
- Disassembly of components for inspection and analysis
- Manufacturing of parts on a limited basis

Process Feed

Plutonium metal or metal alloys; plutonium oxides and hydroxide cakes; other actinide metals or metal alloys and oxides; plutonium scrap; disassembled weapons components (pits); plutonium-beryllium sources; pyrochemical salts; reactor fuel pellets; crucible pieces; ash; ~~analytical laboratory solutions~~; residues from other DOE facilities; anode heels; and analytical laboratory solutions.

Waste Material Parameter List

Waste materials: cellulosics, rubber, plastics; iron-based metals and alloys (generally less than 5 percent by volume)

Packaging materials: steel, plastics

Waste Stream Description

The combustible debris waste stream includes rubber, plastic-based, and cellulose-based waste generated at the facility. Plastic-based waste includes, but may not be limited to, polyethylene and vinyl tape; gloves; plastic vials; polystyrene; Tygon tubing; polyvinyl chloride plastic; Teflon products; Plexiglas; and dry box gloves (unleaded neoprene base). Cellulose-based waste includes, but may not be limited to, rags, wood, paper, and cardboard; laboratory coats and coveralls; booties and cotton gloves, and similar materials. The waste may also contain a small fraction (generally less than 5 percent) of non-combustible solids (e.g., scrap metal, metal lids, zippers, discarded tools).

RCRA Characterization

TA-55-19 is conservatively assigned the following EPA Hazardous Waste Numbers (HWNs). Many of the HWNs are time-dependent, and apply only to containers generated by a particular process over a specific period of time, as documented in process AK reports.

- F001, F002, F003 and F005
- D004, D005, D006, D007, D008, D009, D010, D011, D018, D019, D021, D022, D035, D038, D039, D040

- Drums containing waste from P/S codes AC, AC2, and SA are segregated from this waste stream until the potential applicability of HWN U213 has been resolved.
- Drums containing waste generated from P/S codes SD and SS between 02/98 and 06/98 segregated as a subset of TA-55-19 due to the potential presence of vanadium pentoxide HWN P120). (See separate AK summary for waste stream lot TA-55-19A).

Radionuclide Content

and its decay products (e.g. U-234)

These waste streams predominantly contain a variety of plutonium material types with different well-defined isotopic compositions. Americium-241, neptunium-237, and uranium-234 may be present at detectable concentrations as decay products of their plutonium precursors. Some of the processes separate plutonium from americium and uranium. The waste will usually be enriched in americium-241 and uranium-234 relative to plutonium, but may also be depleted in some cases. Some waste may contain uranium from one of several uranium material types, ~~as well as contaminants from uranium-235, its decay daughter,~~ protactinium-231, ~~and fission product cesium-137~~. Other waste may contain various radionuclides used as feed materials for producing materials, ~~radioassay sources~~, including americium-241, americium-243, cerium-144, curium-244, protactinium-231, neptunium-237, thorium-232, thorium-232 enriched in thorium-230, uranium-233, and depleted uranium.

detector ~~that~~

~~Check source;~~

Primary References for Documentation of Acceptable Knowledge

Process Acceptable Knowledge Summary Report for Chloride Operations at TA-55 (TWCP-AK-2.1-002)

Process Acceptable Knowledge Summary Report for Metal Operation Processes at TA-55 (TWCP-AK-2.1-003)

Process Acceptable Knowledge Summary Report for Miscellaneous Operations at TA-55 (TWCP-AK-2.1-004)

Process Acceptable Knowledge Summary Report for Nitrate Operations at TA-55 (TWCP-AK-2.1-005)

Process Acceptable Knowledge Summary Report for Pyrochemical Processes at TA-55 (TWCP-AK-2.1-006)

Process Acceptable Knowledge Summary Report for Special Processing at TA-55 (TWCP-AK-2.1-007)

In addition, trace levels of ~~fission product~~ ~~as well as~~ cesium-137 ~~that i~~ ~~was spontaneous~~ fission product that was incompletely separated ~~from irradiated~~ ~~of Pu isotopes~~ during the Purex processing at other DOE sites

The Transuranic Waste Characterization/Certification Project (TWCP) Records Management/Document Control (RMDC) Center contains copies of the documents that are referenced in this summary report. Unclassified Controlled Nuclear Information (UCNI) will be reported in records, rather than included in this report. Such records are identified as UCNI in the Acceptable Knowledge Roadmap (Attachment 1).

This AK summary report is based on detailed information compiled in a set of closely related reports about TRU waste generating activities at TA-55. For convenience in organizing AK for plutonium processing at this facility, the processes were categorized into six arbitrary operational areas. The multiple processes in each area are then described in detail in the following six process AK reports:

- *Process Acceptable Knowledge Summary Report for Chloride Operations at TA-55* (TWCP-AK-2.1-002)
- *Process Acceptable Knowledge Summary Report for Metal Operation Processes at TA-55* (TWCP-AK-2.1-003)
- *Process Acceptable Knowledge Summary Report for Miscellaneous Operations at TA-55* (TWCP-AK-2.1-004)
- *Process Acceptable Knowledge Summary Report for Nitrate Operations at TA-55* (TWCP-AK-2.1-005)
- *Process Acceptable Knowledge Summary Report for Pyrochemical Process 55* (TWCP-AK-2.1-006)
- *Process Acceptable Knowledge Summary Report for Special Processing at TA-55* (TWCP-AK-2.1-007)

The process AK reports contain information on over ~~200~~ 175 individual processes that have each been assigned a unique identifier called a process/status (P/S) code. For example, the nitrate operations report (*Process Acceptable Knowledge Summary Report for Nitrate Operations at TA-55* [TWCP-AK-2.1-005,R.2]) covers waste generation processes and characteristics for over 80 different processes, each with its own P/S code. The search and compilation of AK information was based on P/S code, because that is the greatest level of process detail recorded in waste generator records. However, as described in section 3.2, TA-55 TRU waste items have always been segregated and packaged into waste containers based on the physical form and material type content of the waste, without regard to process of origin (i.e., P/S code). In order to mitigate confusion resulting from these two different ways of categorizing TA-55 waste (by process of generation and P/S code or by material content and waste stream number), separate AK reports have been prepared for each categorization method (i.e., process AK reports for process areas, and AK summary reports for waste streams). The AK information search was performed based on the processes used at TA-55 and tracked by the P/S codes, and it is summarized in the process AK reports.

This AK summary report summarizes AK information specific to the combustible debris waste streams TA-55-19 (including waste stream lot TA-55-19A) and TA-55-20.

3.0 DESCRIPTION OF THE WASTE STREAM

3.1 Facility and Mission

TA-55 has extensive capabilities for the extraction and recovery of plutonium from residues and scraps generated from operations at various LANL facilities and other DOE sites in the defense complex. The recovered plutonium is converted into pure plutonium feedstock. These manufacturing and recovery operations, associated maintenance operations, and TA-55 plutonium research are the sources of TRU-contaminated scrap, residues, and debris generated at TA-55. The scrap and residues are processed to recover as much plutonium as practicable before disposal. Wastes are generated from plutonium recovery and purification for defense and non-defense programs; these wastes are generated and produced in the same rooms and gloveboxes and were not segregated based on funding source until August 27, 1998.

The combustible waste streams TA-55-19 and TA-55-20 were generated at the TA-55 Plutonium Facility (Building PF-4) as debris waste from process operations and glovebox maintenance involved in plutonium recovery. For this reason, the waste streams are defense related. However, waste also was pr from "special process" and research-related activities. These wastes were segregated until 1998, but rather were commingled in the final waste cont such an extent that segregation is not possible on the basis of waste generating process or glovebox location (TWCP-887). The waste was also co-mingled with room trash related to these same operations (both defense and non-defense), which was initially boxed as low-level waste but was returned for discard in drums as TRU waste when on-site ~~radioassay~~ assay results showed it exceeded the low-level ~~discard limits (DLs~~ waste threshold value) (TWCP-816).

A LANL site map and a detailed map of the buildings at TA-55, including Building PF-4, are shown in Attachment 2.

3.2 Basis, Rationale, and Assumptions Used to Delineate the Waste Streams

The basis for delineation of TA-55 waste streams was established by the evolving set of LANL and TA-55 waste management plans and site-specific procedures, which date back to the start of operations at the Plutonium Facility in 1978 (TWCP-352, TWCP-697, TWCP-700, TWCP-701, TWCP-3943). The stated guidance and practice from the beginning, continuing to the present day, has been to handle and package all combustible and noncombustible debris waste in a similar fashion, regardless of the process of origin. Relevant details of these planning and implementation documents are summarized in this section, in order

In addition, each major waste form includes provisions for small quantities of unspecified waste with similar properties. This provision is necessary in order to allow for infrequently encountered waste items.

3.2.2 Waste Stream Delineation for TA-55

From the beginning of operations at TA-55, the physical description of each waste item generated was documented on a Waste Origination and Disposition Form (WODF) by the waste generator according to controlled procedures. The P/S code for waste items was sometimes also documented on this form. Starting in 1987, the TA-55 Plutonium Facility began its current system of tracking waste items both by t process from which they originated as well as by their material co... Waste items are labeled with an item identification (ID) code that contains information on the waste material parameter of the item and an embedded P/S code that corresponds to the process that produced the waste item although recording of P/S codes was in consistent until about 1990). In the packaging process, a standard form, the Discardable Waste Log Sheet (DWLS), was used to list each ID code and record its matrix material. This form was signed by the waste packager and approved by quality assurance personnel. Both the WODF and DWLS for each TRU waste drum have been maintained as hard copy records by the generator. For waste stream TA-55-19, example copies of these container records (for combustible debris) are included in Attachment 4. Note that this waste container (LA00000056636) contains waste items generated by three different P/S codes (CXL, ED, and SC), each with its own completed WODF.

one word

Waste items are packaged into waste containers based on the material content of the waste, without regard to P/S code. This practice complicates AK tracking because a single waste container can include waste items from several P/S codes. In the Sampling Plan, TA-55 wastes have been assigned to waste streams based on the waste segregation schemes used by TA-55:

- First by radioisotope content (Pu-238 or Pu-239 material type)
- Then by material matrix (combustible, noncombustible, metal, glass, etc. waste types)
- Then by hazardous waste status (mixed, non-mixed, or special case waste streams)

Waste stream delineation was performed using waste generator information (such as the WODF and DWLS) that has been compiled in an electronic data base that is part of the Sampling Plan. Because waste

Purification steps may include solvent extraction, ion exchange, and oxalate precipitation, depending on the chemical nature of the material to be purified. Ion exchange columns are used to collect plutonium and separate out impurities. Enriched solutions may be further treat oxalic acid to precipitate plutonium oxalate, which is convertec plutonium oxide.

In the hydroxide precipitation step, plutonium in filtrate solutions from purification steps is precipitated with potassium, magnesium, or sodium hydroxide. Heavy metals are concentrated in the plutonium-rich hydroxide cakes and derive from one or more of the following: (a) feed materials that consist of or contain these metals; (b) leaching of chromium from stainless-steel equipment components; or (c) from the use of silver salt (until 1994) as an indicator of chloride content. The resulting Pu-enriched hydroxide cakes become feed material for nitrate operations, and liquid meeting the TA-50 WAC is sent to the RLWTF using the caustic waste line. Some hydroxide cakes are returned to the dissolution step for re-processing.

3.5.4 Nitrate Operations

P/S codes AL, AO, AP, AS, AT, ATL, BAC, BF, BL, BM, BU, CC, CD, CF, CH, COD, COL, CPOD, CR, DF, DP, DS, ED, ETD, EV, FA, FC, FX, GMS, HC, HCD, HD, HGMS, HP, HRA, IA, IS, LC, LG1, LG2, LR, MAG, MAS, MB, MELL, MF, ML, MPD, NC, NL, NR, OD, OH, OY, PA, PAF, PR, PS, PT, PTS, RB, RBJ, RC, RCM, RFX, RO, RR, SC, SP, SSD, SX, TDC, UPS, US, US2, VC, VP1, VP2, VP3, VUL, ZD

A detailed description of nitrate operations can be found in *Process Acceptable Knowledge Summary Report for Nitrate Operations at TA-55* (TWCP-AK-2.1-005).

The overall goal of the nitrate operations is to recover plutonium from scrap and residues, and produce a purified plutonium oxide for conversion into metal. The primary feed sources for the nitrate operations are plutonium residues from other recovery operations (e.g., chloride operations), metal preparation, metal fabrication, analytical laboratory operations, and residues from other DOE facilities. Nitrate operations can be broken down into the following process steps:

- pretreatment
- dissolution
- purification
- evaporation
- cement fixation

Solid waste packaging ~~or to~~ (at the present) or to

Pretreatment primarily includes physical processes used to separate scrap and residues for the next step, dissolution. It may include calcination, caustic leaching, chemical separation (hydroxide or oxalate precipitation), crushing and pulverizing, distillation, filtering of liquids or oils, incineration, magnetic separation, passivation, scraping, or sorting. After pretreatment, solids are sent to dissolution if plutonium concentrations are above the DL and to cement fixation ~~if concentrations~~ (previously) are below the DL. Liquids are sent to purification if plutonium concentrations are above the DL and to the TA-50 Radioactive Waste Treatment Facility (RLWTF) if they meet the TA-50 RLWTF WAC or to evaporation and cement fixation; otherwise, they are further treated until they meet that WAC.

Dissolution includes various steps that generate plutonium nitrate solutions for feed to purification. Primary chemicals used in dissolution are nitric acid and calcium fluoride and/or hydrofluoric acid. Filtered solids are returned to the dissolution process until plutonium concentrations are below the DL, then sent to cement fixation for disposal. Debris items are disposed after removal of plutonium contamination above the DL. Plutonium-bearing solutions are sent on to purification.

Purification consists of ion exchange and precipitation processes. The ion exchange processes use resin-filled columns to collect plutonium, which binds to the resin while impurities flow through the columns; an eluting agent is then used to release purified plutonium in solution. The enriched solutions are then sent to oxalate precipitation. ~~which~~ Calcination of the oxalate converts the plutonium to oxide form. The depleted liquids are sent to the evaporator or the RLWTF, and the calcined plutonium oxides are sent to the vault.

The evaporator processes plutonium-poor liquids in order to re-concentrate plutonium, if possible, or to reduce the volume of liquid waste. Evaporator bottoms are either sent back to ion exchange or discarded to cement fixation, depending on their plutonium content. Heavy metals that may be present are concentrated in this process.

In the cement fixation step, wastes with low plutonium concentrations are collected and immobilized in cement. Most of the wastes generated under these processes (P/S codes CF, HP, and IA) are classified as cemented wastes and would not normally be part of the debris waste streams.

3.6.2 Radionuclide Content Identification

The primary Pu material type inputs for TA-55 processes ~~at~~ are listed in Table 2. The designation *material type* (e.g., MT 52) is used within the DOE Complex to describe the isotopic composition of common blends of radioactive materials used within the Complex. The material type notation was developed because it is a convenient way to describe material types that have very consistent isotopic compositions. Table 2 indicates the isotopic composition of the material types at the time the waste was characterized.

The material type provides the basis for estimating an upper bound for U-234, U-235, and Am-241 contents based on the rate of decay of their precursors, Pu-238, Pu-239 and Pu-241, respectively. The purpose of such bounding calculations is to provide a basis for identifying significant enrichment or depletion of one radionuclide versus another, based on radioassays of individual waste containers (see Section 14). The results of these calculations are tabulated in the last three columns of Table 2, assume that (a) none of these isotopes were initially present in the material, (b) the oldest Pu material in inventory dates back to 1 January 1960, and (c) the waste was packaged on 1 January 1996, making it 36 years old at that time(TWCP-698).

TA-55 processes are not expected to alter the Pu isotopic ratios of the feed material. The material type used in the process generating each waste item was documented on the WODF and DWLS (examples shown in Attachment 4). However, other radionuclides will be present in most of the process wastes from decay of a Pu precursor or as a contaminant in the feed material:

- Np-237, the decay product of Am-241 (half-life, 458 yr), is expected to be present mostly in minor amounts in most debris waste from processes at TA-55.

- In general, uranium and its isotopes are expected to be prese at trace levels, if at all, if the feed material did not purposely uranium. The primary uranium material type inputs for react development activities and for pit disassembly at TA-55 are listed in Table 3.

- U-235 ingrowth from the decay of Pu-239 (half-life, 24,120 years) would be negligible due to the long half-life of Pu-239.

- U-234 would be present in MT 83 (and to a lesser extent in other Pu material types) as a decay product of Pu-238 (half-life, 87.74 years) (Table 2).

- Protactinium (Pa)-~~241~~ 231, the decay-chain daughter of U-235, is expected to be present in trace amounts in some TA-55 wastes due to its widespread presence as of a contaminant in TA-55 operations. (TWCP-5164, TWCP-~~5165~~ 5165).

- Cs-137 is a product of the spontaneous fission of Pu-238, Pu-239 and especially Pu-240, as well as a trace contaminant in purified plutonium from the production reactors. In the latter case the remaining Cs might be on the order of 0.5 ng/g Pu. In the former instance the formation of Cs-137 due to spontaneous fission would lead to about 0.4 pg/g Pu in plutonium that is ten years old. Because Cs-137 due to spontaneous fission is about a factor of a thousand less than that due to residual contamination from the original separation on the production fuel, the latter is the dominant source of Cs in TA-55 waste. (TWCP-5164, TWCP-5165)

In general no correlation is expected to be seen among the different radio elements, Pu, Np, U, Pa or Am. The differences in valence states and chemical affinities among these elements is expected to result in substantial fractionation during several TA-55 processes, including ion exchange, solvent extraction, hydroxide precipitation, dissolution. one word

Secondary radionuclides will also be present in the waste due to processing of feed materials other than Pu (TWCP-698). Additional radionuclides expected to be present in each process were reviewed by a ~~panel of experts~~ at TA-55 and compiled in a memo according to P/S code (TWCP-882), as summarized in Table 4. This list includes Am-241, Am-243, cerium (Ce)-144, curium (Cm)-244, Np-237, Pa-231, Pu-238, Th-230, Th-232, U-233, U-235, and U-238. (TWCP-5166), ~~in conjunction with~~

(TWCP-5165), ~~TWCP-5167~~

The possible presence of Cm-244 in TRU waste is of particular int[illegible] to radioassay operations because it can affect the choice of radioas[illegible] ~~procedure to use for optimal results.~~ Cm-244 was introduced in T[illegible] operations in P/S code DOP, which ~~started in 1988~~. Material outputs from this process sometimes were sent to P/S codes IS or WE. Cm-244 could also be part of debris waste under P/S code CA because both operations took place in the 300 area. Because only one room in this area is available for bagouts, ~~all~~ TRU waste from ~~the 300 area gets~~ DOP and CA were sometimes combined. In addition, because rags from DOP were sent to IS, Cm-244 could be present in the ash produced by this operation, which is then processed through nitrate aqueous recovery operations. Some unknown fraction of the Cm-244 could ultimately end up in the evaporator bottoms, which are then immobilized in cement in P/S code CF. In any case, however, Cm-244 is not expected to be present in any waste generated before 1988.

During TWCP characterization, the contents of each waste package undergo non-destructive analysis to provide detailed radioisotopic data. These data will be used to evaluate the accuracy of AK information in accordance with *Waste Characterization Data Reconciliation with Acceptable Knowledge* (TWCP-DTP-1.2-064). The results of these assay results are summarized in Section 14.2.

3.6.3 Chemical Content Identification

Chemical contents of process inputs and outputs were compiled from chemical lists contained in procedures reviewed during the process AK search and from subject matter expert (SME) input. Individual process AK reports contain detailed assessments of these chemical inputs, and of the applicability of EPA HWNs. In this section, discussion of chemical inputs are divided into the following categories:

- Acids and bases
- Gases and cryogenic fluids
- Metals
- Inorganic chemicals
- Organic chemicals

Table 4. Secondary Radionuclides in TA-55 TRU Waste

Secondary Radionuclide	P/S code generating waste
Americium-241	AO, AP, CA, CD, CF, CLX, CXL, DOP, EV, FA, HCD, HD, HP, IA, LR, MA, OH, PI, PR, PRR, PS, SS, SX, WE, XP; plus trace amounts exp[illegible] in TRU waste generated by nearly all P/S codes, due to ingrowth fro[illegible] 241 decay. Waste could be either depleted or enriched in Am depen[illegible] upon whether the source of contamination is the process product or [illegible] process residues.
Americium-243	BC, CA, DOP, JA, MA, PH, PI, SS, WE
Cerium-144	DOP, WE
Currium-244	DOP, IS (Mar-Apr 1987), WE
Neptunium-237	ATL, BC, CA, CF, DOP, ED, EV, IS, JA, MA, Neptunium,PI, RB, RFX, WE; plus trace amounts expected in TRU waste generated by nearly all P/S codes, due to ingrowth from Am-241 decay
Protactinium-231	BC (1989), JA (1989), WE
Plutonium-238	TDC
Plutonium-241	EV, IS, TDC
Thorium-232	CF, DOP, PT, WE
Thorium-232 enriched with Thorium-230	BC, JA, WE
Uranium-233	DOP, WE
Uranium-235 or enriched uranium	CN, FF, GI, MW, OB, PD, PI, RS, SRL, UA; and P/S codes in nitrate operations (AL, AO, AP, AS, AT, ATL, BAC, BF, BL, BM, BU, CC, CD, CF, CH, COD, COL, CPOD, CR, DF, DP, DS, ED, ETD, EV, FA, FC, FX, GMS, HC, HCD, HD, HGMS, HP, HRA, IA, IS, LC, LG1, LG2, LR, MAG, MAS, MB, MELL, MF, ML, MPD, NC, NL, NR, OD, OH, OY, PA, PAF, PR, PS, PT, PTS, RB, RBJ, RC, RCM, RFX, RO, RR, SC, SP, SSD, SX, TDC, UPS, US, US2, VC, VP1, VP2, VP3, VUL, ZD)
U-238 or depleted uranium	BC, CN, FF, GI, JA, LC, MW, OB, PD, RC, RS, SRL, UA, UPS, US, WE,; and P/S codes in nitrate operations (AL, AO, AP, AS, AT, ATL, BAC, BF, BL, BM, BU, CC, CD, CF, CH, COD, COL, CPOD, CR, DF, DP, DS, ED, ETD, EV, FA, FC, FX, GMS, HC, HCD, HD, HGMS, HP, HRA, IA, IS, LC, LG1, LG2, LR, MAG, MAS, MB, MELL, MF, ML, MPD, NC, NL, NR, OD, OH, OY, PA, PAF, PR, PS, PT, PTS, RB, RBJ, RC, RCM, RFX, RO, RR, SC, SP, SSD, SX, TDC, UPS, US, US2, VC, VP1, VP2, VP3, VUL, ZD)

Sources: TWCP-882, TWCP-AK-2.1-003, TWCP-AK-2.1-005, TWCP-5166, ~~TWCP-~~

3.6.3.1 *Acids and bases.* Acids used in the TA-55 processes covered in this report are ascorbic acid, formic acid, hydrochloric acid, hydrofluoric acid, nitric acid, oxalic acid, perch[illegible] acid, stearic acid, sulfuric acid, and superacids (e.g., [illegible] Bases used in these processes are calcium hydroxide magnesium hydroxide, potassium hydroxide, and sodium hydroxide. No EPA HWNs are applicable to the use of these chemicals in the TA-55 processes for the following reasons:

- D002 (corrosivity) and D003 (reactivity) do ~~does~~ not apply to the solid debris waste because there are no free liquids in this waste.
- D001 (ignitability) and D003 (reactivity) do ~~does~~ not apply to wastes in waste streams TA-55-19 or TA-55-19A despite the use of spent non-halogenated solvents (HWN F003) and the possible production of perchlorate salts in perchloric acid solutions for the following reasons:
  - Perchloric acid solutions are sent to cement fixation (TWCP-5157, TWCP-5158).
  - Any perchlorate salts that might be present on rags are removed when the rags are rinsed before being discarded.
  - Solutions containing spent non-halogenated solvents are sent to the RLWTF if they are below the DL for Pu.
  - Solutions containing spent solvents and above the DL for Pu are further treated by aqueous recovery processes as part of routine chloride and nitrate operations. Aqueous recovery involves dissolving any solid Pu in hydrochloric or nitric acid, followed by ion exchange to extract the Pu. The processed solutions are below the DL for Pu and are either sent to the RLWTF or to the evaporator for volume reduction. Evaporator bottoms are fixed in cement, a waste form for which ignitability is not a concern.
  - Rags, if contaminated with spent solvents and above the DL for Pu, are thermally decomposed, which destroys any organic component.
  - Although contaminated rags that are below the DL for Pu are discarded as combustible debris, headspace gas analyses support the expectation that the solvents are not present in the packaged waste at levels of concern.

Check Misc process AK

Insert Acetonitrile (P/S code ~~AC~~ AC2 ~~or SA~~)

Table 6. Use of RCRA-Regulated Organic Chemicals in TA-55 Processes

Organic Chemical and P/S Codes in Which It Was Used	Comments on Applicability of RCRA Codes
Acetone (P/S codes FF, ME, and MOX)	• F003 applies to P/S code ME because it may have been used in the glo[illegible] cleaning. • F003 does not apply to P/S code FF or MOX because it was only used glovebox.
Benzene (P/S codes AC, AC1, AC2, and SA)	• D018 (benzene) applies to P/S codes AC, AC1, AC2, and SA • F005 applies to P/S codes AC, AC1, AC2, and SA, in which benzene was used as a solvent
Carbon tetrachloride (P/S codes AD, CV, PTP, and PX)	• D019 (carbon tetrachloride) applies to P/S codes AD, CV, PTP and PX. This chemical was used in PTP between 1/87 and 6/89. • F002 does not apply to P/S codes AD, CV, PTP, or PX because it was not used as a solvent or for degreasing.
Chloroform (P/S codes AC, AC1, AC2, APD, FF, and XO)	• D022 (chloroform) applies to P/S codes AC, AC1, AC2, APD, FF and XO. Concentrations in P/S code FF are expected to be below RCRA threshold because freeze-drying should have removed most, if not all, of the residual chloroform before the microspheres were taken into the glovebox for sintering.
Diethyl ether (P/S code SA)	• F003 applies to P/S code SA because of solvent use.
Freon and Freon TF (P/S codes CA, DA, MA, MW, PD, PF, SCB, SRL, UA, VD, WE and XO)	• F002 applies to P/S codes DA, MA and XO. • F002 does not apply to P/S codes CA, MW, PD, SCB, SRL, UA, VD and WE. Although Freon TF is used as a solvent to clean metal parts, the parts are routinely air-dried to avoid the need for cellulosic wipes. • F002 does not apply to P/S code PF because Freon was used as a coolant for a cutting saw.
Methanol (P/S codes AD and SO)	• F003 applies to P/S code AD because it may have been used for cleaning inside the glovebox. • F003 does not apply to P/S code SO because it was used in a cold trap outside the glovebox.
Methylene chloride (P/S code AC1)	• F002 applies to P/S code AC1 because this chemical was used as a solvent (MA) and a paint stripper (XO).
Methyl ethyl ketone (P/S codes MA and XO)	• D035 (methyl ethyl ketone) applies to P/S codes MA and XO. • F005 applies to P/S codes MA and XO, in which methyl ethyl ketone was used as a solvent (MA ~~and paint stripper~~ and XO).
Pyridine (P/S codes AC and SA)	• D038 (pyridine) applies to P/S codes AC, AC2 and SA • F005 applies to P/S codes AC, AC2 and SA, in which pyridine was used as solvent.
Tap Magic (contains 1,1,1 trichloroethane) (P/S code MA)	• F002 does not apply to P/S code MA because Tap Magic is used as a metal cutting fluid or coolant, not as a solvent. Its use was discontinued in 1992.

It is possible that waste generated under P/S codes AC, AC2, and SA may require the assignment of EPA HWN U213 (tetrahydrofuran). This possibility is being investigated.

Because waste items from any of these P/S codes may be present in any given container of combustible debris waste, waste stream TA-55-19 (including lot TA-55-19A) is conservatively assigned the F-listings of F001, F002, F003, and F005. TA-55-19A is segregated for waste with the P-listing of P120. Waste containers assigned to waste stream TA-55-20 only contain items with known P/S codes that do not carry any EPA HWNs.

The reliability of this AK information can be assessed in part based on a review of headspace gas analyses for containers assigned to waste stream TA-55-19 (Section 14.4).

8.2 Toxicity Listings

Both TA-55-19 and TA-55-19A are conservatively assigned the D-listings of D004, D005, D006, D007, D008, D009, D010, D011, D018, D019, D021, D022, D035, D038, D039, and D040.

TA-55-20 has no D listings.

No D-listings are applicable to combustible debris waste generated by the following P/S codes: AC3 (inactive), ACC, AO (Assembly Operation), AO (Americium Processing Calcination), ARI, BA, BAC, BC, BL, BM, BT, CA, CC, CH, CN, CO, COD, CR, CRD, CT, DF, DOP, DP, DT, ELW, EM, EVAC, FA, FC, FSPF, GI, GMS, HC, HG, HRS, ID, IN, ITF, ITF4, JA, LC, LIBS, MAG, MAS, MBC, MF, MO, MOX, MP, MW, NCD, NEPTUNIUM, NR, OB, OM, OR, OY, PA, PAF, PD, PF, PH, PI, PIG, PPD, PR, PS, RAP, RAP2, RB, RBJ, RCM, RD, RFX, RL, RM, RS, SBB, SCB, SMP, SRL, SX, TIGR, UA, UPS, US, US2, VD, VP2, VS, WE,WLT, and ZD.

Based on information in the TA-55 process AK reports, combustible debris waste generated by the following P/S codes are conservatively assigned EPA HWNs due to the potential presence of D-listed constituents. In many cases, the applicability of the HWN is limited to waste generated during a specific period of time, as discussed in the appropriate process AK report. If a D-listed constituent is known to be present in the waste at some level, the D-code is conservatively assigned unless analytical data confirm that its concentration is below the regulatory level.

AC	D007, D009, D011, D018, D022, D038
AC1	D007, D009, D011, D018, D022
AC2	D007, D009, D011, D018, D022, D038
ACD	D005, D006, D007, D008, D011

Insert space

AK information has been compared with visual examination data for about 22 containers so far in waste streams TA-55-19 and TA-55-20, in accordance with *Reconciliation of Visual Examination and Radiography Information* (TWCP-QP-1.1-028). In two cases, the number of layers of packaging observed during visual examination was greater than the number of layers reported by the waste generator, and an incorrect TRUCON code was assigned by the waste generator (Section 14.2). It is possible that the extra pl layers were breached (i.e., these were confining layers) but that the VE inspectio catch this detail. However, the conservative conclusion is that these discrepancies indicate that TRUCON code assignments by the waste generator must be viewed with caution. Consequently, the most conservative TRUCON code will be assigned to each waste container in waste streams TA-55-19 and TA-55-20, in accordance with the following guidance:

a) The default TRUCON codes from Table 7 will be assigned if the waste generator has not assigned a TRUCON code.

b) The TRUCON code assigned by the waste generator will be used only if it has been positively confirmed by RTR or VE data.

c) If no VE data are available, and if the RTR data are indeterminate, then the default TRUCON code will be assigned to the container.

This guidance only applies to retrievably stored waste. It is assumed that newly generated waste packaged under procedures approved by TWCP and CBFO will be assigned correct TRUCON codes.

14.0 CONFIRMATION OF AK INFORMATION FOR WASTE STREAM

Characterization data acquired by WAP-compliant activities provide a means to judge the reliability of AK information. Radiography, radioassay, and headspace gas analysis are conducted on all retrievably stored containers of debris waste, and VE is being conducted on at least 50 containers from waste streams TA-55-19 and TA-55-20. Relevant aspects of the data produced by these activities are summarized in the sections below, focusing on the extent to which the data confirm AK information and identifying aspects for which additional AK documentation or research may be warranted.

14.1 Radiography Data

Radiography data are examined to confirm AK information about WMC assignments, layers of packaging, absence of prohibited items, and the relative volumes or weights of waste matrix parameters for a waste stream. The WMC for waste streams TA-55-19 and TA-55-20 is S5300 (combustible debris). Thus far, 265 containers, or about 6 percent of the 4454 containers in these two waste streams (Sampling Plan, Revision 3), have undergone RTR, with the data contained in WIPP-compliant batch data reports. The following observations are made from an examination of these data, as summarized in Table 8 and 9:

Table 9. RTR packaging data for waste streams TA-55-19 and TA-55-20

Maximum number of layers	Metal Layers	Plastic Layers	No. of Drums	% of Total Examined	
Less than or equal to 1	0	1	2	out of 231	1% of drums
Less than or equal to 2	0	2	21	out of 231	9% of drums
Less than or equal to 3	0	3	95	out of 231	41% of drums
Less than or equal to 4	1	3	2	out of 231	1% of drums
Less than or equal to 5	None observed		0	out of 231	0% of drums
Less than or equal to 6	None observed		0	out of 231	0% of drums
Number of layers	Metal	Plastic	Drums		
Indeterminant	0	Indeter	109	Indeterminant due to number of plastic horsetails:	
	1	Indeter	2		
	Subtotal		111	out of 231	48% of drums

Data sources: RTR batch data reports TWCP-4019, 4020, 4021, 4080, 4219, 4399, 4400, 4457, 4458, 4459, 4464, 4471, 4542, 4543, 4544, 4545, 4566, 4570, 4572, 4573, 4574, 4577, 4721, 4797, 4835; RTR batch data reports still in Project-level review: LA01-RTR-006, ~~LA01-RTR-007~~, ~~LA01-RTR-009~~, ~~LA01-RTR-013~~

5119, 5121, 5147

updated 4-24-01
JTM

- confirmation of WMC S5300 for 98.9 percent of the drums examined
- identification of WMC discrepancies for 3 containers (1.1 percent of the drums examined), which must be reassigned to other waste streams
- identification of potentially sealed containers > 4 liters in 13 percent of the drums, for which PWRs were submitted
- confirmation of the absence of any other prohibited item or condition requiring a PWR
- confirmation of 4 or fewer packaging layers for 52 percent of the dru Plastic packaging layers for the remaining 48 percent were indeterminate due to the large amount of horsetails present in the drums
- confirmation of the waste stream description:
- 97 percent of the drums contain more than 75 wt percent combustible waste;
- 86 percent of the drums contain less than 5 wt percent metal waste, and 94 percent contain less than 10 wt percent metal waste.

Changes in waste stream assignment because of characterization data are documented in accordance with *Waste Characterization Data Reconciliation with Acceptable Knowledge* (TWCP-DTP-2.1-064).

AK information resolved an apparent WMC discrepancy for several drums in waste stream TA-55-19 which contained material identified as metal by the RTR operator, thereby leading to an apparent WMC of S5110 (for metal debris) (NCR-00-013, NCR-00-025, NCR-00-026, NCR-00-027, NCR-00-028). After reviewing with the generator how these drums were packaged, the generator determined that these drums were packaged with very dense in-house fabricated plastic material (Kynar, also known as PVDF) used to line gloveboxes and build equipment in chloride operations starting in about 1988 (TWCP-5157). Hence, the WMC S5300 was correct. ~~All 5 drums contained waste only from P/S code CX (TWCP-5086), although~~

14.2 Visual Examination Data

VE data are used to confirm AK information on waste stream descriptions, WMC, the absence of prohibited items, the number and type of confining layers, and the relative volumes and weights of waste matrix parameters. AK packaging and WMC information have been evaluated by VE for about 22 containers so far in waste streams TA-55-19 and TA-55-20, in accordance with *Reconciliation of Visual Examination and Radiography Information* (TWCP-QP-1.1-028). These 22 drums were packaged between 11/85 and 8/97 (Sampling Plan). P/S codes are available for the waste items packaged in these drums, as documented in radioassay batch data reports (TWCP-4024, TWCP-4025, TWCP-4052, TWCP-

As a result of this information, the RTR operations ~~subsequently~~ added Kynar to one of the ~~two~~ test drums used at the start of each sample batch.

Table 8. VE data for waste streams TA-55-19 and TA-55-20

Characterization data	Number of containers				Comments
	AK (see Note 1)		RTR	VE	
Waste Matrix Code					
S5000	—		—	—	Positive confirmation of AK WMC by RTR and VE for all 22 drums
S5300	22		22	8	
S5310	—		—	14	
Maximum # of layers and associated TRUCON codes	Default from Table 6	Assigned in SP	See Note 2	—	Number of confining layers • AK and VE match for 3 drums • AK more conservative than VE for 14 drums • AK from waste generator was less conservative than VE for 5 drums
0 LA116G	—	—		2	
1 LA116C, E, F	—	6		2	
2 LA116B, D	—	—		9	
3 None	—	—		8	
4 LA116A	4	4		1	
5 LA116H	—	—		—	
6 LA116I	8	—			

SP—Sampling Plan (Rev 3)

Notes:
1. AK information for WMC and TRUCON code assignments is from the Sampling Plan, Rev 3. If no TRUCON code was assigned, then the default code was determined from Table 6, using AK information on packaging dates and P/S codes as documented in the Sampling Plan.
2. RTR data indicated no metal packaging layers for any of these drums, which was consistent with information and confirmed by VE. The number of plastic packaging layers was indeterminate by RTR except for one drum with three layers, which was consistent with the default TRUCON code and confirmed by VE (TWCP-4393).

Data sources: VE batch data reports TWCP-3947, 3948, 3949, 3950, 3951, 4022, 4326, 4327, 4392, 4393, 4394, 4427; VE batch data reports still in Project-level review: LA00-3.4.1-005, ~~(LA00-3.4.1-006,)~~ ~~[LA01-VE-001]~~, LA01-VE-002, ~~[LA01-VE-004]~~, ~~[LA01-VE-005]~~

4800, 5085, 5112, 5120

updated 4-24-01 jm

Data sources: Radioassay batch data reports TWCP-4009, 4023, 4024, 4025, 4052, 4078, 4158, 4159, 4212, 4225, 4226, 4303; and Sampling Plan (Rev 3). P/S codes from TWCP-5086 and TWCP-5163.
*The rationale for this MDL cut off (21.5% uncertainty) is given in TWCP-2130.

Table 12. Headspace Gas Data for Target Analytes in Waste Stream TA-55-19

ANALYTE	MDL, ppmv	PRQL, ppmv	No. of Samples analyzed	No. of samples above MDL	No. of samples above PRQL	VOC concentrations, in ppmv			EPA HWN
						Mean	UCL_{90}*	Maximum	based on Assigned AK
Benzene	1.96	10	55	4	0	1.2	1.8	5	F005, D018
Bromoform	2.27	10	55	0	0	1.1	1.1	—	—
Carbon Tetrachloride	2.00	10	55	1	0	1.0	1.0	3	D019
Chlorobenzene	1.93	10	55	1	0	1.0	1.0	2	F002, D021
Chloroform	1.85	10	55	4	0	1.0	1.4	3	D022
1,1-Dichloroethane	1.78	10	55	2	0	1.0	1.9	4	—
1,2-Dichloroethane	2.40	10	55	0	0	1.2	1.2	—	
1,1-Dichloroethene	2.74	10	55	0	0	1.4	1.4	—	
Cis-1,2-Dichloroethylene	2.06	10	55	0	0	1.0	1.0	—	
Ethyl Benzene	1.72	10	55	0	0	0.9	0.9	—	F003
Ethyl Ether	1.30	10	55	0	0	0.65	0.65	—	F003
Methylene Chloride	1.97	10	55	11	8	8.7	18.1	100	F002
1,1,2,2-Tetrachloroethane	1.62	10	55	0	0	0.8	0.8	—	—
Tetrachloroethene	1.44	10	55	0	0	0.7	0.7	—	F002, D039
Toluene	1.67	10	55	33	11	6.5	8.5	51	F005
1,1,2-Trichloro 1,2,2-trifluoroethane (Freon-113)	1.79	10	55	1	1	1.7	1.7	44	F002
1,1,1-Trichloroethane	1.82	10	55	1	0	1.0	1.0	4	—
Trichloroethene	1.31	10	55	0	0	0.7	0.7	6.0	F002, D040
m-Xylene and p-xylene	3.62	10	55	0	0	1.8	1.8	—	F003
o-Xylene	1.90	10	55	0	0	0.95	0.95	—	F003
Acetone	16.12	100	55	31	13	69.7	91.2	410	F003
Butanol	8.78	100	55	1	0	4.8	4.8	29	—
Methanol	11.42	100	55	10	0	14.6	24.3	84	F003
Methyl ethyl ketone	18.42	100	55	4	0	10.1	12.6	23	F005, D035
Methyl isobutyl ketone	16.05	100	55	0	0	8.0	8.0	—	—

Source: TWCP-4722; VOC target analyte list for debris waste from WIPP WAP, Table B3-2.

ppmv, part per million by volume; MDL, Method Detection Limit; UCL90, 90% Upper Concentration Limit

PRQL, Program Required Quantitation Limits

— Not applicable

* For samples with concentrations below the MDL, UCL_{90} concentrations are calculated by assuming concentrations were half of the MDL values as determined in the MDL study dated 6/19/00 (TWCP-3248).

Table 13. Headspace Gas Data For Flammable VOCs, Hydrogen and Methane in Waste Stream TA-55-19

ANALYTE	Lower Explosive Limit (LEL)	No. of Samples analyzed	No. of samples above MDL	Maximum measured concentration (ppmv)	Evidence for presence of gas in waste	
					Gas data	AK
Acetone	2.5%	55	31	410	X	X
Benzene	1.2%	55	4	5	X	X
Butanol	1.4%	55	1	29	X	X
Chlorobenzene	1.3%	55	1	2	X	X
Cyclohexane	1.3%	55	0	—	—	—
1,1-Dichloroethane	5.4%	55	2	4	X	—
1,2-Dichloroethane	6.2%	55	0	—	—	—
1,1-Dichloroethene	6.5%	55	0	—	—	X
Cis-1,2-Dichloroethylene	5.6%	55	0	—	—	—
Ethyl Benzene	0.8%	55	0	—	—	X
Ethyl Ether	1.9%	55	0	—	—	X
Methanol	6.0%	55	10	84	X	X
Methyl ethyl ketone	1.4% at 200 °F	55	4	23	X	X
Methyl isobutyl ketone	1.2% at 200 °F	55	0	—	—	—
Toluene	1.1%	55	33	51	X	X
1,3,5-Trimethylbenzene	Not known	55	0	—	—	—
1,2,4-Trimethylbenzene	0.9%	55	0	—	—	—
m-Xylene and p-xylene	1.1%	55	0	—	—	X
o-Xylene	0.9%	55	0	—	—	X
Total potentially flammable VOCs in a single container*	—	55	—	473	X	X
Hydrogen*	4%	55	32	0.38%	X	X
Methane*	5.3%	55	0	—	—	X

Source: TWCP-4722

ppmv, part per million by volume; MDL, Method Detection Limit

LEL, Lower explosive (flammable) ~~limit~~ in air, % by volume (at room temperature); data from NIOSH ~~Pocket Guide to Chemical Hazards (TWCP ____)~~ (2000)

— Not applicable or not detected

* WAC requirements state that a waste container cannot be shipped if its headspace gas concentration exceeds 500 ppm for total flammable VOCs, 5% for hydrogen, or 500 ppm for methane concentration.

** The average flammable VOC concentration is 128 ±101 ppm (TWCP-4722). Gases that were below detection are taken into account in this calculation by assuming they are present at concentrations that are equal to half of the MDL values.

Add to Section 15, references: National Institute for Occupational Safety and Health (NIOSH). (~~2000~~ 1997). NIOSH Pocket Guide to Chemical Hazards, Publication # ~~2000-130~~ 97-140. National Technical Information Service (NTIS): Springfield VA. NTIS Order # PB 97-177-604.

ACCEPTABLE KNOWLEDGE ROADMAP

Waste Stream: TA-55-19 and TA-55-20.

Documents are in the TWCP RMDC Center.

TWCP Record No.	Information Category Code	Information	Source	Summary	Limitations
TWCP-	A	Reconciliation between AK, VE and RTR data for drum from waste stream TA-55-20 (per Sampling Plan, R3)	LA00-3.4.1-005	VE, AK and RTR data on WMC, number and types of packaging layers, TRUCON code, and waste items in drum	VE batch data report still in Project-level review
TWCP-4800	A	Reconciliation between AK, VE and RTR data for drum from waste stream TA-55-19 (per Sampling Plan, R3)	LA00-3.4.1-006	VE, AK and RTR data on WMC, number and types of packaging layers, TRUCON code, and waste items in drum	~~VE batch data report still in Project-level review~~ None
TWCP-5112	A	Reconciliation between AK, VE and RTR data for drum from waste stream TA-55-19 (per Sampling Plan, R3)	LA01-VE-001	VE, AK and RTR data on WMC, number and types of packaging layers, TRUCON code, and waste items in drum	~~VE batch data report still in Project-level review~~ None
TWCP-	A	Reconciliation between AK, VE and RTR data for drum from waste stream TA-55-19 (per Sampling Plan, R3)	LA01-VE-002	VE, AK and RTR data on WMC, number and types of packaging layers, TRUCON code, and waste items in drum	VE batch data report still in Project-level review
TWCP-5085	A	Reconciliation between AK, VE and RTR data for drum from waste stream TA-55-19 (per Sampling Plan, R3)	LA01-VE-004	VE, AK and RTR data on WMC, number and types of packaging layers, TRUCON code, and waste items in drum	~~VE batch data report still in Project-level review~~ None
TWCP-5120	A	Reconciliation between AK, VE and RTR data for drum from waste stream TA-55-19 (per Sampling Plan, R3)	LA01-VE-005	VE, AK and RTR data on WMC, number and types of packaging layers, TRUCON code, and waste items in drum	~~VE batch data report still in Project-level review~~ None
TWCP-	A	Reconciliation between AK, VE and RTR data for drum from waste stream TA-55-20 (per Sampling Plan, R3)	LA00-3.4.1-003	VE, AK and RTR data on WMC, number and types of packaging layers, TRUCON code, and waste items in drum	[illegible]atch data report still in [illegible]ct-level review

Need to add Special TWCP # (to be sent by e[illegible]

* Information Category Codes: A = forms intended for use in waste certification, B = data from controlled databases and published documen[illegible] [illegible]ublished data, and D = interviews, memos, and letters

TWCP Record No.	Information Category Code	Information	Source	Summary	Limitations
TWCP-	A	RTR data for drums from waste stream TA-55-19 or TA-55-20	LA01-RTR-006	RTR data on prohibited items, WMC, packaging layers, and estimated volumes and weights of waste material parameters in drum	Sampling plan (Rev 3) referenced in this batch data report may not be up-to-date with respect to waste stream assignments for containers. RTR batch data report still in Project-level review
TWCP- 5110	A	RTR data for drums from waste stream TA-55-19 or TA-55-20	LA01-RTR-007	RTR data on prohibited items, WMC, packaging layers, and estimated volumes and weights of waste material parameters in drum	Sampling plan (Rev 3) referenced in this batch data report may not be up-to-date with respect to waste stream assignments for containers. ~~RTR batch data report still in Project-level review~~
TWCP- 4797	A	RTR data for drums from waste stream TA-55-19 or TA-55-20	LA01-RTR-008	RTR data on prohibited items, WMC, packaging layers, and estimated volumes and weights of waste material parameters in drum	Sampling plan (Rev 3) referenced in this batch data report may not be up-to-date with respect to waste stream assignments for containers. RTR batch data report still in Project-level review
TWCP- 5121	A	RTR data for drums from waste stream TA-55-19 or TA-55-20	LA01-RTR-009	RTR data on prohibited items, WMC, packaging layers, and estimated volumes and weights of waste material parameters in drum	Sampling plan (Rev 3) referenced in this batch data report may not be up-to-date with respect to waste stream assignments for containers. ~~RTR batch data report still in Project-level review~~
TWCP- 5147	A	RTR data for drums from waste stream TA-55-19 or TA-55-20	LA01-RTR-013	RTR data on prohibited items, WMC, packaging layers, and estimated volumes and weights of waste material parameters in drum	Sampling plan (Rev 3) referenced in this batch data report may not be up-to-date with respect to waste stream assignments for containers. ~~RTR batch data report still~~ in ~~Project-level review~~
~~TWCP-~~	A				

* Information Category Codes: A = forms intended for use in waste certification, B = data from controlled databases and published documents, C = unpublished data, and D = interviews, memos, and letters

DRAFT #8

TA-55 PLUTONIUM FACILITY
ACCEPTABLE KNOWLEDGE REPORT

REPORT TITLE: Acceptable Knowledge Summary Report for Waste Streams TA-55-19 and TA-55-20

REPORT NUMBER: TWCP-AK-2.1-008,R.2 (LA-UR-00-5727)

WASTE GENERATED FROM WASTE STREAMS: TA-55-19, Lot TA-55-19A, and TA-55-20

EFFECTIVE DATE: _____

NEXT REVIEW DATE: _____

DOCUMENT PREPARER:

_____ NAME _____ DATE

APPROVALS:

_____ INDEPENDENT TECHNICAL REVIEWER/EDITOR _____ DATE

_____ SITE PROJECT MANAGER _____ DATE

_____ WASTE CERTIFICATION OFFICIAL _____ DATE

_____ SITE PROJECT QA OFFICER _____ DATE

_____ FACILITY REPRESENTATIVE _____ DATE

© 2000, 2001 University of California

- Preparation of ultra-pure plutonium metals, alloys, and compounds
- Preparation of specific alloys, including casting and machining these materials into specific shapes
- Determination of the high-temperature thermodynamic properties of plutonium
- Reclamation of plutonium from scrap and residues produced by numerous feed sources
- Disassembly of components for inspection and analysis
- Manufacturing of parts on a limited basis

Process Feed

Plutonium metal or metal alloys; plutonium oxides and hydroxide cakes; other actinide metals or metal alloys and oxides; plutonium scrap; disassembled weapons components (pits); plutonium-beryllium sources; pyrochemical salts; reactor fuel pellets; crucible pieces; ash; ~~analytical laboratory solutions~~; residues from other DOE facilities; anode heels; and analytical laboratory solutions.

Waste Material Parameter List

Waste materials: cellulosics, rubber, plastics; iron-based metals and alloys (generally less than 5 percent by volume)

Packaging materials: steel, plastics

Waste Stream Description

The combustible debris waste stream includes rubber, plastic-based, and cellulose-based waste generated at the facility. Plastic-based waste includes, but may not be limited to, polyethylene and vinyl tape; gloves; plastic vials; polystyrene; Tygon tubing; polyvinyl chloride plastic; Teflon products; Plexiglas; and dry box gloves (unleaded neoprene base). Cellulose-based waste includes, but may not be limited to, rags, wood, paper, and cardboard; laboratory coats and coveralls; booties and cotton gloves, and similar materials. The waste may also contain a small fraction (generally less than 5 percent) of non-combustible solids (e.g., scrap metal, metal lids, zippers, discarded tools).

RCRA Characterization

TA-55-19 is conservatively assigned the following EPA Hazardous Waste Numbers (HWNs). Many of the HWNs are time-dependent, and apply only to containers generated by a particular process over a specific period of time, as documented in process AK reports.

- F001, F002, F003 and F005
- D004, D005, D006, D007, D008, D009, D010, D011, D018, D019, D021, D022, D035, D038, D039, D040

- Drums containing waste from P/S codes AC, AC2, and SA are segregated from this waste stream until the potential applicability of HWN U213 has been resolved.
- Drums containing waste generated from P/S codes SD and SS between 02/98 and 06/98 are segregated as a subset of TA-55-19 due to the potential presence of vanadium pentoxide (EPA HWN P120). (See separate AK summary for waste stream lot TA-55-19A).

Radionuclide Content

and its decay products (e.g. U-234)

These waste streams predominantly contain a variety of plutonium material types with different well-defined isotopic compositions. Americium-241, neptunium-237, and uranium-234 may be present at detectable concentrations as decay products of their plutonium precursors. Some of the processes separate plutonium from americium and uranium. The waste will usually be enriched in americium-241 and uranium-234 relative to plutonium, but may also be depleted in some cases. Some waste may contain uranium from one of several uranium material types, ~~as well as contaminants from uranium-235~~ ~~its decay daughter,~~ protactinium-231, ~~and fission product cesium-137~~. Other waste may contain various radionuclides used as feed materials for producing materials, ~~radioassay sources~~, including americium-241, americium-243, cerium-144, curium-244, protactinium-231, neptunium-237, thorium-232, thorium-232 enriched in thorium-230, uranium-233, and depleted uranium.

~~Check source;~~

Primary References for Documentation of Acceptable Knowledge

Process Acceptable Knowledge Summary Report for Chloride Operations at TA-55 (TWCP-AK-2.1-002)

Process Acceptable Knowledge Summary Report for Metal Operation Processes at TA-55 (TWCP-AK-2.1-003)

Process Acceptable Knowledge Summary Report for Miscellaneous Operations at TA-55 (TWCP-AK-2.1-004)

Process Acceptable Knowledge Summary Report for Nitrate Operations at TA-55 (TWCP-AK-2.1-005)

Process Acceptable Knowledge Summary Report for Pyrochemical Processes at TA-55 (TWCP-AK-2.1-006)

Process Acceptable Knowledge Summary Report for Special Processing at TA-55 (TWCP-AK-2.1-007)

In addition, trace levels of ~~fission product~~ ~~as well as~~ cesium-137 ~~that~~ i ~~as a spontaneous~~ fission product ~~of Pu isotopes~~ that was incompletely separated ~~from irradiated~~ during the Purex processing at other DOE sites

Waste Generating Processes

Plutonium manufacturing, recovery, and research operations at the TA-55 Plutonium Facility, as well as associated maintenance operations, generate TRU wastes. These operations include:

- Preparation of ultra-pure plutonium metals, alloys, and compounds
- Preparation of specific alloys, including casting and machining these materials into specific shapes
- Determination of the high-temperature thermodynamic properties of plutonium
- Reclamation of plutonium from scrap and residues produced by numerous feed sources
- Disassembly of components for inspection and analysis
- Manufacturing of parts on a limited basis

Process Feed

Plutonium metal or metal alloys; plutonium oxides and hydroxide cakes; other actinide metals or metal alloys and oxides; plutonium scrap; disassembled weapons components (pits); plutonium-beryllium sources; pyrochemical salts; reactor fuel pellets; crucible pieces; ash; ~~analytical laboratory solutions;~~ residues from other DOE facilities; anode heels; and analytical laboratory solutions.

Waste Material Parameter List

Waste materials: cellulosics, rubber, plastics; iron-based metals and alloys (generally less than 5 percent by volume)

Packaging materials: steel, plastics

Waste Stream Description

The combustible debris waste stream includes rubber, plastic-based, and cellulose-based waste generated at the facility. Plastic-based waste includes, but may not be limited to, polyethylene and vinyl tape; gloves; plastic vials; polystyrene; Tygon tubing; polyvinyl chloride plastic; Teflon products; Plexiglas; and dry box gloves (unleaded neoprene base). Cellulose-based waste includes, but may not be limited to, rags, wood, paper, and cardboard; laboratory coats and coveralls; booties and cotton gloves, and similar materials. The waste may also contain a small fraction (generally less than 5 percent) of non-combustible solids (e.g., scrap metal, metal lids, zippers, discarded tools).

RCRA Characterization

TA-55-19A is conservatively assigned the following EPA Hazardous Waste Numbers (HWNs). Many of the HWNs are time-dependent, and apply only to containers generated by a particular process over a specific period of time, as documented in process AK reports.

- F001, F002, F003 and F005
- D004, D005, D006, D007, D008, D009, D010, D011, D018, D019, D021, D022, D035, D038, D039, D040
- P120
- Drums containing waste from P/S codes AC, AC2, and SA are segregated from this waste stream lot until the potential applicability of HWN U213 has been resolved.

Radionuclide Content Replace with revised text (same as used on page xviii

~~These waste streams predominantly contain a variety of plutonium material types with different well-defined isotopic compositions. Americium-241, neptunium-237, and uranium-234 may be present at detectable concentrations as decay products of their plutonium precursors. Some of the processes separate plutonium from americium and uranium. The waste will usually be enriched in americium-241 and uranium-234 relative to plutonium, but may also be depleted in some cases. Some waste may contain uranium from one of several uranium material types, as well as contaminants from uranium-235: its decay daughter, protactinium-231 and fission production cesium-137. Other waste may contain various radionuclides used as feed materials for producing radioassay sources, including americium-241, americium-243, cerium-144, curium-244, protactinium-231, neptunium-237, thorium-232, thorium-232 enriched in thorium-230, uranium-233, and depleted uranium.~~

Primary References for Documentation of Acceptable Knowledge

Process Acceptable Knowledge Summary Report for Chloride Operations at TA-55 (TWCP-AK-2.1-002)

Process Acceptable Knowledge Summary Report for Metal Operation Processes at TA-55 (TWCP-AK-2.1-003)

Process Acceptable Knowledge Summary Report for Miscellaneous Operations at TA-55 (TWCP-AK-2.1-004)

Process Acceptable Knowledge Summary Report for Nitrate Operations at TA-55 (TWCP-AK-2.1-005)

Process Acceptable Knowledge Summary Report for Pyrochemical Processes at TA-55 (TWCP-AK-2.1-006)

Process Acceptable Knowledge Summary Report for Special Processing at TA-55 (TWCP-AK-2.1-007)

- Preparation of specific alloys, including casting and machining these materials into specific shapes
- Determination of the high-temperature thermodynamic properties of plutonium
- Reclamation of plutonium from scrap and residues produced by numerous feed sources
- Disassembly of components for inspection and analysis
- Manufacturing of parts on a limited basis

Process Feed

Plutonium metal or metal alloys; plutonium oxides and hydroxide cakes; other actinide metals or metal alloys and oxides; plutonium scrap; disassembled weapons components (pits); plutonium-beryllium sources; pyrochemical salts; reactor fuel pellets; crucible pieces; ash; ~~analytical laboratory solutions;~~ residues from other DOE facilities; anode heels; and analytical laboratory solutions.

Waste Material Parameter List

Waste materials: cellulosics, rubber, plastics; iron-based metals and alloys (generally less than 5 percent by volume)

Packaging materials: steel, plastics

Waste Stream Description

The combustible debris waste stream includes rubber, plastic-based, and cellulose-based waste generated at the facility. Plastic-based waste includes, but may not be limited to, polyethylene and vinyl tape; gloves; plastic vials; polystyrene; Tygon tubing; polyvinyl chloride plastic; Teflon products; Plexiglas; and dry box gloves (unleaded neoprene base). Cellulose-based waste includes, but may not be limited to, rags, wood, paper, and cardboard; laboratory coats and coveralls; booties and cotton gloves, and similar materials. The waste may also contain a small fraction (generally less than 5 percent) of non-combustible solids (e.g., scrap metal, metal lids, zippers, discarded tools).

RCRA Characterization

No HWNs apply to containers in waste stream TA-55-20.

Radionuclide Content Replace with revised text — Same as used on page xviii

~~These waste streams predominantly contain a variety of plutonium material types with different well-defined isotopic compositions. Americium-241, neptunium-237, and uranium-234 may be present at detectable concentrations as decay products of their plutonium precursors. Some of the processes separate plutonium from americium and uranium. The waste will usually be enriched in americium-241 and uranium-234 relative to plutonium, but may also be depleted in some cases. Some waste may contain uranium from one of several uranium material types, as well as~~

contaminants of uranium 235: its decay daughter, protactinium-231 and fission product cesium-137. Other waste may contain various radionuclides used as feed materials for producing radioassay sources, including americium-241, americium-243, cerium-144, curium-244, protactinium-231, neptunium-237, thorium-232, thorium-232 enriched in thorium-230, uranium-233, and depleted uranium.

Primary References for Documentation of Acceptable Knowledge

Process Acceptable Knowledge Summary Report for Chloride Operations at TA-55 (TWCP-AK-2.1-002)

Process Acceptable Knowledge Summary Report for Metal Operation Processes at TA-55 (TWCP-AK-2.1-003)

Process Acceptable Knowledge Summary Report for Miscellaneous Operations at TA-55 (TWCP-AK-2.1-004)

Process Acceptable Knowledge Summary Report for Nitrate Operations at TA-55 (TWCP-AK-2.1-005)

Process Acceptable Knowledge Summary Report for Pyrochemical Processes at TA-55 (TWCP-AK-2.1-006)

Process Acceptable Knowledge Summary Report for Special Processing at TA-55 (TWCP-AK-2.1-007)

The Transuranic Waste Characterization/Certification Project (TWCP) Records Management/Document Control (RMDC) Center contains copies of the documents that are referenced in this summary report. Unclassified Controlled Nuclear Information (UCNI) will be reported in records, rather than included in this report. Such records are identified as UCNI in the Acceptable Knowledge Roadmap (Attachment 1).

This AK summary report is based on detailed information compiled in a set of closely related reports about TRU waste generating activities at TA-55. For convenience in organizing AK for plutonium processing at this facility, the processes were categorized into six arbitrary operational areas. The multiple processes in each area are then described in detail in the following six process AK reports:

- *Process Acceptable Knowledge Summary Report for Chloride Operations at TA-55* (TWCP-AK-2.1-002)
- *Process Acceptable Knowledge Summary Report for Metal Operation Processes at TA-55* (TWCP-AK-2.1-003)
- *Process Acceptable Knowledge Summary Report for Miscellaneous Operations at TA-55* (TWCP-AK-2.1-004)
- *Process Acceptable Knowledge Summary Report for Nitrate Operations at TA-55* (TWCP-AK-2.1-005)
- *Process Acceptable Knowledge Summary Report for Pyrochemical Processes at TA-55* (TWCP-AK-2.1-006)
- *Process Acceptable Knowledge Summary Report for Special Processing at TA-55* (TWCP-AK-2.1-007)

The process AK reports contain information on over ~~200~~ 175 individual processes that have each been assigned a unique identifier called a process/status (P/S) code. For example, the nitrate operations report (*Process Acceptable Knowledge Summary Report for Nitrate Operations at TA-55* [TWCP-AK-2.1-005,R.2]) covers waste generation processes and characteristics for over 80 different processes, each with its own P/S code. The search and compilation of AK information was based on P/S code, because that is the greatest level of process detail recorded in waste generator records. However, as described in section 3.2, TA-55 TRU waste items have always been segregated and packaged into waste containers based on the physical form and material type content of the waste, without regard to process of origin (i.e., P/S code). In order to mitigate confusion resulting from these two different ways of categorizing TA-55 waste (by process of generation and P/S code or by material content and waste stream number), separate AK reports have been prepared for each categorization method (i.e., process AK reports for process areas, and AK summary reports for waste streams). The AK information search was performed based on the processes used at TA-55 and tracked by the P/S codes, and it is summarized in the process AK reports.

This AK summary report summarizes AK information specific to the combustible debris waste streams TA-55-19 (including waste stream lot TA-55-19A) and TA-55-20.

3.0 DESCRIPTION OF THE WASTE STREAM

3.1 Facility and Mission

TA-55 has extensive capabilities for the extraction and recovery of plutonium from residues and scraps generated from operations at various LANL facilities and other DOE sites in the defense complex. The recovered plutonium is converted into pure plutonium feedstock. These manufacturing and recovery operations, associated maintenance operations, and TA-55 plutonium research are the sources of TRU-contaminated scrap, residues, and debris generated at TA-55. The scrap and residues are processed to recover as much plutonium as practicable before disposal. Wastes are generated from plutonium recovery and purification for defense and non-defense programs; these wastes are generated and produced in the same rooms and gloveboxes and were not segregated based on funding source until August 27, 1998.

The combustible waste streams TA-55-19 and TA-55-20 were generated at the TA-55 Plutonium Facility (Building PF-4) as debris waste from process operations and glovebox maintenance involved in plutonium recovery. For this reason, the waste streams are defense related. However, waste also was produced from "special process" and research-related activities. These wastes were not segregated until 1998, but rather were commingled in the final waste containers to such an extent that segregation is not possible on the basis of waste generating process or glovebox location (TWCP-887). The waste was also co-mingled with room trash related to these same operations (both defense and non-defense), which was initially boxed as low-level waste but was returned for discard in drums as TRU waste when on-site ~~radioassay~~ assay results showed it exceeded the low-level ~~discard limits (DLs)~~ waste threshold value (TWCP-816).

A LANL site map and a detailed map of the buildings at TA-55, including Building PF-4, are shown in Attachment 2.

3.2 Basis, Rationale, and Assumptions Used to Delineate the Waste Streams

The basis for delineation of TA-55 waste streams was established by the evolving set of LANL and TA-55 waste management plans and site-specific procedures, which date back to the start of operations at the Plutonium Facility in 1978 (TWCP-352, TWCP-697, TWCP-700, TWCP-701, TWCP-3943). The stated guidance and practice from the beginning, continuing to the present day, has been to handle and package all combustible and noncombustible debris waste in a similar fashion, regardless of the process of origin. Relevant details of these planning and implementation documents are summarized in this section, in order

In addition, each major waste form includes provisions for small quantities of unspecified waste with similar properties. This provision is necessary in order to allow for infrequently encountered waste items.

3.2.2 Waste Stream Delineation for TA-55

From the beginning of operations at TA-55, the physical description of each waste item generated was documented on a Waste Origination and Disposition Form (WODF) by the waste generator according to controlled procedures. The P/S code for waste items was sometimes also documented on this form. Starting in 1987, the TA-55 Plutonium Facility began its current system of tracking waste items both by the process from which they originated as well as by their material content. Waste items are labeled with an item identification (ID) code that contains information on the waste material parameter of the item and an embedded P/S code that corresponds to the process that produced the waste item although recording of P/S codes was in consistent until about 1990). In the packaging process, a standard form, the Discardable Waste Log Sheet (DWLS), was used to list each ID code and record its matrix material. This form was signed by the waste packager and approved by quality assurance personnel. Both the WODF and DWLS for each TRU waste drum have been maintained as hard copy records by the generator. For waste stream TA-55-19, example copies of these container records (for combustible debris) are included in Attachment 4. Note that this waste container (LA00000056636) contains waste items generated by three different P/S codes (CXL, ED, and SC), each with its own completed WODF.

One word

Waste items are packaged into waste containers based on the material content of the waste, without regard to P/S code. This practice complicates AK tracking because a single waste container can include waste items from several P/S codes. In the Sampling Plan, TA-55 wastes have been assigned to waste streams based on the waste segregation schemes used by TA-55:

- First by radioisotope content (Pu-238 or Pu-239 material type)
- Then by material matrix (combustible, noncombustible, metal, glass, etc. waste types)
- Then by hazardous waste status (mixed, non-mixed, or special case waste streams)

Waste stream delineation was performed using waste generator information (such as the WODF and DWLS) that has been compiled in an electronic data base that is part of the Sampling Plan. Because waste

Purification steps may include solvent extraction, ion exchange, and oxalate precipitation, depending on the chemical nature of the material to be purified. Ion exchange columns are used to collect plutonium and separate out impurities. Enriched solutions may be further treated with oxalic acid to precipitate plutonium oxalate, which is converted to plutonium oxide.

In the hydroxide precipitation step, plutonium in filtrate solutions from purification steps is precipitated with potassium, magnesium, or sodium hydroxide. Heavy metals are concentrated in the plutonium-rich hydroxide cakes and derive from one or more of the following: (a) feed materials that consist of or contain these metals; (b) leaching of chromium from stainless-steel equipment components; or (c) from the use of silver salt (until 1994) as an indicator of chloride content. The resulting Pu-enriched hydroxide cakes become feed material for nitrate operations, and liquid meeting the TA-50 WAC is sent to the RLWTF using the caustic waste line. Some hydroxide cakes are returned to the dissolution step for re-processing.

3.5.4 Nitrate Operations

P/S codes AL, AO, AP, AS, AT, ATL, BAC, BF, BL, BM, BU, CC, CD, CF, CH, COD, COL, CPOD, CR, DF, DP, DS, ED, ETD, EV, FA, FC, FX, GMS, HC, HCD, HD, HGMS, HP, HRA, IA, IS, LC, LG1, LG2, LR, MAG, MAS, MB, MELL, MF, ML, MPD, NC, NL, NR, OD, OH, OY, PA, PAF, PR, PS, PT, PTS, RB, RBJ, RC, RCM, RFX, RO, RR, SC, SP, SSD, SX, TDC, UPS, US, US2, VC, VP1, VP2, VP3, VUL, ZD

A detailed description of nitrate operations can be found in *Process Acceptable Knowledge Summary Report for Nitrate Operations at TA-55* (TWCP-AK-2.1-005).

The overall goal of the nitrate operations is to recover plutonium from scrap and residues, and produce a purified plutonium oxide for conversion into metal. The primary feed sources for the nitrate operations are plutonium residues from other recovery operations (e.g., chloride operations), metal preparation, metal fabrication, analytical laboratory operations, and residues from other DOE facilities. Nitrate operations can be broken down into the following process steps:

- pretreatment
- dissolution
- purification
- evaporation
- cement fixation

Solid waste packaging ~~or to~~ (at the present) or to

Pretreatment primarily includes physical processes used to separate scrap and residues for the next step, dissolution. It may include calcination, caustic leaching, chemical separation (hydroxide or oxalate precipitation), crushing and pulverizing, distillation, filtering of liquids or oils, incineration, magnetic separation, passivation, scraping, or sorting. After pretreatment, solids are sent to dissolution if plutonium concentrations are above the DL and to cement fixation ~~if concentrations~~ (previously) are below the DL. Liquids are sent to purification if plutonium concentrations are above the DL and to the TA-50 Radioactive Liquid Waste Treatment Facility (RLWTF) if they meet the TA-50 RLWTF WAC or to evaporation and cement fixation; otherwise, they are further treated until they meet that WAC.

Dissolution includes various steps that generate plutonium nitrate solutions for feed to purification. Primary chemicals used in dissolution are nitric acid and calcium fluoride and/or hydrofluoric acid. Filtered solids are returned to the dissolution process until plutonium concentrations are below the DL, then sent to cement fixation for disposal. Debris items are disposed after removal of plutonium contamination above the DL. Plutonium-bearing solutions are sent on to purification.

Purification consists of ion exchange and precipitation processes. The ion exchange processes use resin-filled columns to collect plutonium, which binds to the resin while impurities flow through the columns; an eluting agent is then used to release purified plutonium in solution. The enriched solutions are then sent to oxalate precipitation, ~~which~~ Calcination of the oxalate converts the plutonium to oxide form. The depleted liquids are sent to the evaporator or the RLWTF, and the calcined plutonium oxides are sent to the vault.

The evaporator processes plutonium-poor liquids in order to re-concentrate plutonium, if possible, or to reduce the volume of liquid waste. Evaporator bottoms are either sent back to ion exchange or discarded to cement fixation, depending on their plutonium content. Heavy metals that may be present are concentrated in this process.

In the cement fixation step, wastes with low plutonium concentrations are collected and immobilized in cement. Most of the wastes generated under these processes (P/S codes CF, HP, and IA) are classified as cemented wastes and would not normally be part of the debris waste streams.

3.6.2 Radionuclide Content Identification

The primary Pu material type inputs for TA-55 processes ~~at~~ are listed in Table 2. The designation *material type* (e.g., MT 52) is used within the DOE Complex to describe the isotopic composition of common blends of radioactive materials used within the Complex. The material type notation was developed because it is a convenient way to describe material types that have very consistent isotopic compositions. Table 2 indicates the isotopic composition of the material types at the time the waste was characterized.

The material type provides the basis for estimating an upper bound for U-234, U-235, and Am-241 contents based on the rate of decay of their precursors, Pu-238, Pu-239 and Pu-241, respectively. The purpose of such bounding calculations is to provide a basis for identifying significant enrichment or depletion of one radionuclide versus another, based on radioassays of individual waste containers (see Section 14). The results of these calculations are tabulated in the last three columns of Table 2, assume that (a) none of these isotopes were initially present in the material, (b) the oldest Pu material in inventory dates back to 1 January 1960, and (c) the waste was packaged on 1 January 1996, making it 36 years old at that time(TWCP-698).

TA-55 processes are not expected to alter the Pu isotopic ratios of the feed material. The material type used in the process generating each waste item was documented on the WODF and DWLS (examples shown in Attachment 4). However, other radionuclides will be present in most of the process wastes from decay of a Pu precursor or as a contaminant in the feed material:

- Np-237, the decay product of Am-241 (half-life, 458 yr), is expected to be present mostly in minor amounts in most debris waste from processes at TA-55.

- In general, uranium and its isotopes are expected to be present only at trace levels, if at all, if the feed material did not purposely contain uranium. The primary uranium material type inputs for reactor fuel development activities and for pit disassembly at TA-55 are listed in Table 3.

- U-235 ingrowth from the decay of Pu-239 (half-life, 24,120 years) would be negligible due to the long half-life of Pu-239.

- U-234 would be present in MT 83 (and to a lesser extent in other Pu material types) as a decay product of Pu-238 (half-life, 87.74 years) (Table 2).

- Protactinium (Pa)-~~241~~ 231, the decay-chain daughter of U-235, is expected to be present in trace amounts in some TA-55 wastes due to its widespread presence as of a contaminant in TA-55 operations. (TWCP-5164, TWCP-~~5165~~ 5165).

- Cs-137 is a product of the spontaneous fission of Pu-238, Pu-239 and especially Pu-240, as well as a trace contaminant in purified plutonium from the production reactors. In the latter case the remaining Cs might be on the order of 0.5 ng/g Pu. In the former instance the formation of Cs-137 due to spontaneous fission would lead to about 0.4 pg/g Pu in plutonium that is ten years old. Because Cs-137 due to spontaneous fission is about a factor of a thousand less than that due to residual contamination from the original separation on the production fuel, the latter is the dominant source of Cs in TA-55 waste. (TWCP-5164, TWCP-5165)

In general no correlation is expected to be seen among the different radio elements, Pu, Np, U, Pa or Am. The differences in valence states and chemical affinities among these elements is expected to result in substantial fractionation during several TA-55 processes, including ion exchange, solvent extraction, hydroxide precipitation, dissolution. one word

Secondary radionuclides will also be present in the waste due to processing of feed materials other than Pu (TWCP-698). Additional radionuclides expected to be present in each process were reviewed by a ~~panel of experts~~ at TA-55 and compiled in a memo according to P/S code (TWCP-882), as summarized in Table 4. This list includes Am-241, Am-243, cerium (Ce)-144, curium (Cm)-244, Np-237, Pa-231, Pu-238, Th-230, Th-232, U-233, U-235, and U-238. TWCP-5166),

~~in conjunction with~~

(TWCP-5165). ~~TWCP-5167~~

The possible presence of Cm-244 in TRU waste is of particular interest to radioassay operations because it can affect the choice of radioassay ~~procedure to use for optimal~~ results. Cm-244 was introduced in TA-55 operations in P/S code DOP, which started in 1988. Material outputs from this process sometimes were sent to P/S codes IS or WE. Cm-244 could also be part of debris waste under P/S code CA because both operations took place in the 300 area. Because only one room in this area is available for bagouts, ~~all~~ TRU waste from ~~the 300 area gets~~ DOP and CA were sometimes combined. In addition, because rags from DOP were sent to IS, Cm-244 could be present in the ash produced by this operation, which is then processed through nitrate aqueous recovery operations. Some unknown fraction of the Cm-244 could ultimately end up in the evaporator bottoms, which are then immobilized in cement in P/S code CF. In any case, however, Cm-244 is not expected to be present in any waste generated before 1988.

During TWCP characterization, the contents of each waste package undergo non-destructive analysis to provide detailed radioisotopic data. These data will be used to evaluate the accuracy of AK information in accordance with *Waste Characterization Data Reconciliation with Acceptable Knowledge* (TWCP-DTP-1.2-064). The results of these assay results are summarized in Section 14.2.

3.6.3 Chemical Content Identification

Chemical contents of process inputs and outputs were compiled from chemical lists contained in procedures reviewed during the process AK search and from subject matter expert (SME) input. Individual process AK reports contain detailed assessments of these chemical inputs, and of the applicability of EPA HWNs. In this section, discussion of chemical inputs are divided into the following categories:

- Acids and bases
- Gases and cryogenic fluids
- Metals
- Inorganic chemicals
- Organic chemicals

Table 4. Secondary Radionuclides in TA-55 TRU Waste

Secondary Radionuclide	P/S code generating waste
Americium-241	AO, AP, CA, CD, CF, CLX, CXL, DOP, EV, FA, HCD, HD, HP, IA, LR, MA, OH, PI, PR, PRR, PS, SS, SX, WE, XP; plus trace amounts expected in TRU waste generated by nearly all P/S codes, due to ingrowth from Pu-241 decay. Waste could be either depleted or enriched in Am depending upon whether the source of contamination is the process product or the process residues.
Americium-243	BC, CA, DOP, JA, MA, PH, PI, SS, WE
Cerium-144	DOP, WE
Currium-244	DOP, IS (Mar-Apr 1987), WE
Neptunium-237	ATL, BC, CA, CF, DOP, ED, EV, IS, JA, MA, Neptunium,PI, RB, RFX, WE; plus trace amounts expected in TRU waste generated by nearly all P/S codes, due to ingrowth from Am-241 decay
Protactinium-231	BC (1989), JA (1989), WE
Plutonium-238	TDC
Plutonium-241	EV, IS, TDC
Thorium-232	CF, DOP, PT, WE
Thorium-232 enriched with Thorium-230	BC, JA, WE
Uranium-233	DOP, WE
Uranium-235 or enriched uranium	CN, FF, GI, MW, OB, PD, PI. RS, SRL, UA; and P/S codes in nitrate operations (AL, AO, AP, AS, AT, ATL, BAC, BF, BL, BM, BU, CC, CD, CF, CH, COD, COL, CPOD, CR, DF, DP, DS, ED, ETD, EV, FA, FC, FX, GMS, HC, HCD, HD, HGMS, HP, HRA, IA, IS, LC, LG1, LG2, LR, MAG, MAS, MB, MELL, MF, ML, MPD, NC, NL, NR, OD, OH, OY, PA, PAF, PR, PS, PT, PTS, RB, RBJ, RC, RCM, RFX, RO, RR, SC, SP, SSD, SX, TDC, UPS, US, US2, VC, VP1, VP2, VP3, VUL, ZD)
U-238 or depleted uranium	BC, CN, FF, GI, JA, LC, MW, OB, PD, RC, RS, SRL, UA, UPS, US, WE,; and P/S codes in nitrate operations (AL, AO, AP, AS, AT, ATL, BAC, BF, BL, BM, BU, CC, CD, CF, CH, COD, COL, CPOD, CR, DF, DP, DS, ED, ETD, EV, FA, FC, FX, GMS, HC, HCD, HD, HGMS, HP, HRA, IA, IS, LC, LG1, LG2, LR, MAG, MAS, MB, MELL, MF, ML, MPD, NC, NL, NR, OD, OH, OY, PA, PAF, PR, PS, PT, PTS, RB, RBJ, RC, RCM, RFX, RO, RR, SC, SP, SSD, SX, TDC, UPS, US, US2, VC, VP1, VP2, VP3, VUL, ZD)

Sources: TWCP-882, TWCP-AK-2.1-003, TWCP-AK-2.1-005, TWCP-5166, ~~TWCP-~~

3.6.3.1 *Acids and bases*. Acids used in the TA-55 processes covered in this report are ascorbic acid, formic acid, hydrochloric acid, hydrofluoric acid, nitric acid, oxalic acid, perchloric acid, stearic acid, sulfuric acid, and superacids (e.g., HSO_3F). Bases used in these processes are calcium hydroxide, magnesium hydroxide, potassium hydroxide, and sodium hydroxide. No EPA HWNs are applicable to the use of these chemicals in the TA-55 processes for the following reasons:

- D002 (corrosivity) and D003 (reactivity) ~~does~~ do not apply to the solid debris waste because there are no free liquids in this waste.
- D001 (ignitability) and D003 (reactivity) ~~does~~ do not apply to wastes in waste streams TA-55-19 or TA-55-19A despite the use of spent non-halogenated solvents (HWN F003) and the possible production of perchlorate salts in perchloric acid solutions for the following reasons:
  - Perchloric acid solutions are sent to cement fixation (TWCP-5157, TWCP-5158).
  - Any perchlorate salts that might be present on rags are removed when the rags are rinsed before being discarded.
  - Solutions containing spent non-halogenated solvents are sent to the RLWTF if they are below the DL for Pu.
  - Solutions containing spent solvents and above the DL for Pu are further treated by aqueous recovery processes as part of routine chloride and nitrate operations. Aqueous recovery involves dissolving any solid Pu in hydrochloric or nitric acid, followed by ion exchange to extract the Pu. The processed solutions are below the DL for Pu and are either sent to the RLWTF or to the evaporator for volume reduction. Evaporator bottoms are fixed in cement, a waste form for which ignitability is not a concern.
  - Rags, if contaminated with spent solvents and above the DL for Pu, are thermally decomposed, which destroys any organic component.
  - Although contaminated rags that are below the DL for Pu are discarded as combustible debris, headspace gas analyses support the expectation that the solvents are not present in the packaged waste at levels of concern.

were pyrophoric. However, EPA HWN D003 does not apply to P/S codes AC, AC1, or AC2 because the metals are consumed or oxidized before discarding.

- Arsenic (D004) was used in P/S code PE between 1984 and 1985, and EPA HWN D004 is applicable to P/S code PE during this period.
- Cadmium (D006) applies to a limited number of anode heels produced in P/S codes ER, PX, and SS using cadmium as a solvent.
- Lead (D008) was used in P/S codes DOP, ER, KBTF, PX, and SS. For combustible debris waste, EPA HWN D008 is applicable to P/S codes DOP, KBTF, and PX. ~~This~~ also applicable to metal waste from P/S code DOP (TWCP-5[illegible]) For P/S codes ER and SS, D008 is only applicable to the metal waste.
- Tin-lead (D008) solder was used in sensors in P/S code BT, but D008 is only applicable to the metal waste from this P/S code, and not to the combustible debris waste.
- Mercury (D009) applies to P/S code SSMD, in which it was used for about one week in the summer of 1994.
- Nickel powder was used in P/S code CO as a sintering aid. This metal is listed in Appendix VIII but no HWN is given.
- Sodium (D003) was used in P/S code EL. However, D003 does not apply in this case because excess Na is dissolved in Dowanol 80.
- Stainless steel (contains chromium, D007) was used in P/S code WE. However, EPA HWN D007 does not apply in this case. There is no potential to leach chromium because stainless steel is not exposed to strong acids in P/S code WE.

3.6.3.4 *Inorganic chemicals*. The following inorganic chemicals used in the TA-55 processes are not identified as having hazardous characteristics in 40 CFR Part 261, including Appendix VIII in that regulation: ~~aluminum bifluoride~~, aluminum chloride, aluminum fluoride, aluminum nitrate, aluminum oxide, ammonium chloride, antimony pentafluoride, bromine, calcium carbonate, calcium chloride, calcium fluoride,

3.6.3.5 *Organic chemicals.* The following organic chemicals used in the TA-55 processes are not identified as having hazardous characteristics in 40 CFR Part 261, including Appendix VIII in that regulation: 1-propanol, 3-in-1 household oil, ~~acetonitrile~~ alkylating agents (unspecified), bromobenzene, bromocresol purple, carbon tetrafluoride, Citrapeel, DBBP (dibutyl butyl-phosphonate), DBBP (dibutyl butyl-phosphonate)/Isopar (isoparaffinic hydrocarbon solvent), diethyl oxalate, dihexyl n,n-diethylcarbamoylmethyl phosphonate (DHDCMP), diisopropyl benzene, Dow Corning 2000 Oil, Dowanol 80 (long-chain alcohol), ethanol, ethylene glycol, Fantastic, formamide, Fomblin brand pump oil, GoJo cleaner (kerosene derivative), hexane, hydrazine dihydrochloride, hydrazine hydrochloride, ion exchange resin, isopropanol, kerosene, Metalprep 79 (phosphoric acid-based metal cleaner), MolyKote, n-dodecane, Nuetracleaner #1, Nuetracleaner #2, octylphenyl diisobutyl carbamoylmethyl phosphine oxide (CMPO), oil (engine), organic liquid emulsifier, Organicstrip, perchlorocarbons, phenolphthalein, phosphate buffer solution, phosphine oxide, phthalate buffer solution, polyethylene glycol, polyoxyethylene-20-sorbitan laurate (surfactant), SF-2I (as coolant), silicon adhesive, silicon defoamer, sugar, surfactants, tetraethylamine hydrochloride, tetraethylamine hydroxide, tetraethylammonium hydroxide, Texaco Regal 32 oil (cutting oil), thionyl chloride, tributyl phosphate (TBP), tributyl phosphate (TBP)/Isopar (isoparaffinic hydrocarbon solvent), tributyl phosphate and iodine in kerosene, trioctylphosphine oxide (TOPO), urea, Vactra oil, vacuum grease, vacuum pump oil, WD-40, and Windex.

delete

~~App VIII~~

Several organic chemicals used in TA-55 processes are identified in 40 CFR Part 261 or in Appendix VIII of that regulation as having hazardous characteristics. Table ~~8~~ 6 lists these chemicals, their HWNs, P/S codes in which they were used, and the applicability of the HWNs to the use of these chemicals in TA-55 processes.

4.0 DIVISION OF THE WASTE STREAM INTO LOTS

TA-55-19A is a subset (i.e., lot) of waste stream TA-55-19. Waste in this lot, which is expected to consist of only a few drums, is identical to the rest of the waste stream except for the possibility that the drums may contain vanadium pentoxide (EPA HWN P120), which was used only between 02/01/98 and 06/10/98 in two specific P/S codes.

Check Misc. process AK

Insert Acetonitrile (P/S code ~~AC~~ AC2 ~~and SA~~)

Table 6. Use of RCRA-Regulated Organic Chemicals in TA-55 Processes

Organic Chemical and P/S Codes in Which It Was Used	Comments on Applicability of RCRA Codes
Acetone (P/S codes FF, ME, and MOX)	• F003 applies to P/S code ME because it may have been used in the glovebox for cleaning. • F003 does not apply to P/S code FF or MOX because it was only used outside the glovebox.
Benzene (P/S codes AC, AC1, AC2, and SA)	• D018 (benzene) applies to P/S codes AC, AC1, AC2, and SA • F005 applies to P/S codes AC, AC1, AC2, and SA, in which benzene was used as a solvent
Carbon tetrachloride (P/S codes AD, CV, PTP, and PX)	• D019 (carbon tetrachloride) applies to P/S codes AD, CV, PTP and PX. This chemical was used in PTP between 1/87 and 6/89. • F002 does not apply to P/S codes AD, CV, PTP, or PX because it was not used as a solvent or for degreasing.
Chloroform (P/S codes AC, AC1, AC2, APD, FF, and XO)	• D022 (chloroform) applies to P/S codes AC, AC1, AC2, APD, FF and XO. Concentrations in P/S code FF are expected to be below RCRA threshold because freeze-drying should have removed most, if not all, of the residual chloroform before the microspheres were taken into the glovebox for sintering.
Diethyl ether (P/S code SA)	• F003 applies to P/S code SA because of solvent use.
Freon and Freon TF (P/S codes CA, DA, MA, MW, PD, PF, SCB, SRL, UA, VD, WE and XO)	• F002 applies to P/S codes DA, MA and XO. • F002 does not apply to P/S codes CA, MW, PD, SCB, SRL, UA, VD and WE. Although Freon TF is used as a solvent to clean metal parts, the parts are routinely air-dried to avoid the need for cellulosic wipes. • F002 does not apply to P/S code PF because Freon was used as a coolant for a cutting saw.
Methanol (P/S codes AD and SO)	• F003 applies to P/S code AD because it may have been used for cleaning inside the glovebox. • F003 does not apply to P/S code SO because it was used in a cold trap outside the glovebox.
Methylene chloride (P/S code AC1)	• F002 applies to P/S code AC1 because this chemical was used as a solvent (MA) and a paint stripper (XO).
Methyl ethyl ketone (P/S codes MA and XO)	• D035 (methyl ethyl ketone) applies to P/S codes MA and XO. • F005 applies to P/S codes MA and XO, in which methyl ethyl ketone was used as a solvent (MA ~~and paint stripper~~ and XO).
Pyridine (P/S codes AC and SA)	• D038 (pyridine) applies to P/S codes AC, AC2 and SA • F005 applies to P/S codes AC, AC2 and SA, in which pyridine was used as solvent.
Tap Magic (contains 1,1,1 trichloroethane) (P/S code MA)	• F002 does not apply to P/S code MA because Tap Magic is used as a metal cutting fluid or coolant, not as a solvent. Its use was discontinued in 1992.

It is possible that waste generated under P/S codes AC, AC2, and SA may require the assignment of EPA HWN U213 (tetrahydrofuran). This possibility is being investigated.

Because waste items from any of these P/S codes may be present in any given container of combustible debris waste, waste stream TA-55-19 (including lot TA-55-19A) is conservatively assigned the F-listings of F001, F002, F003, and F005. TA-55-19A is segregated for waste with the P-listing of P120. Waste containers assigned to waste stream TA-55-20 only contain items with known P/S codes that do not carry any EPA HWNs.

The reliability of this AK information can be assessed in part based on a review of headspace gas analyses for containers assigned to waste stream TA-55-19 (Section 14.4).

8.2 Toxicity Listings

Both TA-55-19 and TA-55-19A are conservatively assigned the D-listings of D004, D005, D006, D007, D008, D009, D010, D011, D018, D019, D021, D022, D035, D038, D039, and D040.

TA-55-20 has no D listings.

No D-listings are applicable to combustible debris waste generated by the following P/S codes: AC3 (inactive), ACC, AO (Assembly Operation), AO (Americium Processing Calcination), ARI, BA, BAC, BC, BL, BM, BT, CA, CC, CH, CN, CO, COD, CR, CRD, CT, DF, DOP, DP, DT, ELW, EM, EVAC, FA, FC, FSPF, GI, GMS, HC, HG, HRS, ID, IN, ITF, ITF4, JA, LC, LIBS, MAG, MAS, MBC, MF, MO, MOX, MP, MW, NCD, NEPTUNIUM, NR, OB, OM, OR, OY, PA, PAF, PD, PF, PH, PI, PIG, PPD, PR, PS, RAP, RAP2, RB, RBJ, RCM, RD, RFX, RL, RM, RS, SBB, SCB, SMP, SRL, SX, TIGR, UA, UPS, US, US2, VD, VP2, VS, WE,WLT, and ZD.

Based on information in the TA-55 process AK reports, combustible debris waste generated by the following P/S codes are conservatively assigned EPA HWNs due to the potential presence of D-listed constituents. In many cases, the applicability of the HWN is limited to waste generated during a specific period of time, as discussed in the appropriate process AK report. If a D-listed constituent is known to be present in the waste at some level, the D-code is conservatively assigned unless analytical data confirm that its concentration is below the regulatory level.

AC	D007, D009, D011, D018, D022, D038
AC1	D007, D009, D011, D018, D022
AC2	D007, D009, D011, D018, D022, D038
ACD	D005, D006, D007, D008, D011

Insert space

AK information has been compared with visual examination data for about 22 containers so far in waste streams TA-55-19 and TA-55-20, in accordance with *Reconciliation of Visual Examination and Radiography Information* (TWCP-QP-1.1-028). In two cases, the number of layers of packaging observed during visual examination was greater than the number of layers reported by the waste generator, and an incorrect TRUCON code was assigned by the waste generator (Section 14.2). It is possible that the extra plastic layers were breached (i.e., these were confining layers) but that the VE inspection did not catch this detail. However, the conservative conclusion is that these discrepancies indicate that TRUCON code assignments by the waste generator must be viewed with caution. Consequently, the most conservative TRUCON code will be assigned to each waste container in waste streams TA-55-19 and TA-55-20, in accordance with the following guidance:

a) The default TRUCON codes from Table 7 will be assigned if the waste generator has not assigned a TRUCON code.

b) The TRUCON code assigned by the waste generator will be used only if it has been positively confirmed by RTR or VE data.

c) If no VE data are available, and if the RTR data are indeterminate, then the default TRUCON code will be assigned to the container.

This guidance only applies to retrievably stored waste. It is assumed that newly generated waste packaged under procedures approved by TWCP and CBFO will be assigned correct TRUCON codes.

14.0 CONFIRMATION OF AK INFORMATION FOR WASTE STREAM

Characterization data acquired by WAP-compliant activities provide a means to judge the reliability of AK information. Radiography, radioassay, and headspace gas analysis are conducted on all retrievably stored containers of debris waste, and VE is being conducted on at least 50 containers from waste streams TA-55-19 and TA-55-20. Relevant aspects of the data produced by these activities are summarized in the sections below, focusing on the extent to which the data confirm AK information and identifying aspects for which additional AK documentation or research may be warranted.

14.1 Radiography Data

Radiography data are examined to confirm AK information about WMC assignments, layers of packaging, absence of prohibited items, and the relative volumes or weights of waste matrix parameters for a waste stream. The WMC for waste streams TA-55-19 and TA-55-20 is S5300 (combustible debris). Thus far, 265 containers, or about 6 percent of the 4454 containers in these two waste streams (Sampling Plan, Revision 3), have undergone RTR, with the data contained in WIPP-compliant batch data reports. The following observations are made from an examination of these data, as summarized in Table 8 and 9:

Table 9. RTR packaging data for waste streams TA-55-19 and TA-55-20

Maximum number of layers	Metal Layers	Plastic Layers	No. of Drums	% of Total Examined	
Less than or equal to 1	0	1	2	out of 231	1% of drums
Less than or equal to 2	0	2	21	out of 231	9% of drums
Less than or equal to 3	0	3	95	out of 231	41% of drums
Less than or equal to 4	1	3	2	out of 231	1% of drums
Less than or equal to 5	None observed		0	out of 231	0% of drums
Less than or equal to 6	None observed		0	out of 231	0% of drums
Number of layers	Metal	Plastic	Drums		
Indeterminant	0	Indeter	109	Indeterminant due to number of plastic horsetails:	
	1	Indeter	2		
	Subtotal		111	out of 231	48% of drums

Data sources: RTR batch data reports TWCP-4019, 4020, 4021, 4080, 4219, 4399, 4400, 4457, 4458, 4459, 4464, 4471, 4542, 4543, 4544, 4545, 4566, 4570, 4572, 4573, 4574, 4577, 4721, 4797, 4835; RTR batch data reports still in Project-level review: LA01-RTR-006, ~~LA01-RTR-007~~, ~~LA01-RTR-009~~, ~~LA01-RTR-013~~

5119, 5121, 5147

updated 4-24-01
JTM

- confirmation of WMC S5300 for 98.9 percent of the drums examined
- identification of WMC discrepancies for 3 containers (1.1 percent of the drums examined), which must be reassigned to other waste streams
- identification of potentially sealed containers > 4 liters in 13 percent of the drums, for which PWRs were submitted
- confirmation of the absence of any other prohibited item or condition requiring a PWR
- confirmation of 4 or fewer packaging layers for 52 percent of the drums. Plastic packaging layers for the remaining 48 percent were indeterminate due to the large amount of horsetails present in the drums
- confirmation of the waste stream description:
- 97 percent of the drums contain more than 75 wt percent combustible waste;
- 86 percent of the drums contain less than 5 wt percent metal waste, and 94 percent contain less than 10 wt percent metal waste.

Changes in waste stream assignment because of characterization data are documented in accordance with *Waste Characterization Data Reconciliation with Acceptable Knowledge* (TWCP-DTP-2.1-064).

AK information resolved an apparent WMC discrepancy for several drums in waste stream TA-55-19 which contained material identified as metal by the RTR operator, thereby leading to an apparent WMC of S5110 (for metal debris) (NCR-00-013, NCR-00-025, NCR-00-026, NCR-00-027, NCR-00-028). After reviewing with the generator how these drums were packaged, the generator determined that these drums were packaged with very dense in-house fabricated plastic material (Kynar, also known as PVDF) used to line gloveboxes and build equipment in chloride operations starting in about 1988 (TWCP-5157). Hence, the WMC S5300 was correct. ~~All 5 drums contained waste only from P/S code CX (TWCP-5086), although~~

14.2 Visual Examination Data

VE data are used to confirm AK information on waste stream descriptions, WMC, the absence of prohibited items, the number and type of confining layers, and the relative volumes and weights of waste matrix parameters. AK packaging and WMC information have been evaluated by VE for about 22 containers so far in waste streams TA-55-19 and TA-55-20, in accordance with *Reconciliation of Visual Examination and Radiography Information* (TWCP-QP-1.1-028). These 22 drums were packaged between 11/85 and 8/97 (Sampling Plan). P/S codes are available for the waste items packaged in these drums, as documented in radioassay batch data reports (TWCP-4024, TWCP-4025, TWCP-4052, TWCP-

As a result of this information, the RTR operations ~~subsequently~~ added Kynar to one of the ~~two~~ test drums used at the start of each sample batch.

Table 8. VE data for waste streams TA-55-19 and TA-55-20

Characterization data	Number of containers				Comments
	AK (see Note 1)		RTR	VE	
Waste Matrix Code					
S5000	—		—	—	Positive confirmation of AK WMC by RTR and VE for all 22 drums
S5300	22		22	8	
S5310	—		—	14	
Maximum # of layers and associated TRUCON codes	Default from Table 6	Assigned in SP	See Note 2		Number of confining layers • AK and VE match for 3 drums • AK more conservative than VE for 14 drums • AK from waste generator was less conservative than VE for 5 drums
0 LA116G	—	—		2	
1 LA116C, E, F	—	6		2	
2 LA116B, D	—	—		9	
3 None	—	—		8	
4 LA116A	4	4		1	
5 LA116H	—	—		—	
6 LA116I	8	—			

SP—Sampling Plan (Rev 3)

Notes:
1. AK information for WMC and TRUCON code assignments is from the Sampling Plan, Rev 3. If no TRUCON code was assigned, then the default code was determined from Table 6, using AK information on packaging dates and P/S codes as documented in the Sampling Plan.
2. RTR data indicated no metal packaging layers for any of these drums, which was consistent with AK information and confirmed by VE. The number of plastic packaging layers was indeterminate by RTR except for one drum with three layers, which was consistent with the default TRUCON code and confirmed by VE (TWCP-4393).

Data sources: VE batch data reports TWCP-3947, 3948, 3949, 3950, 3951, 4022. 4326, 4327, 4392, 4393, 4394, 4427; VE batch data reports still in Project-level review: LA00-3.4.1-005, ~~(LA00-3.4.1-006,~~ ~~[LA01-VE-001]~~ LA01-VE-002, ~~[LA01-VE-004]~~ ~~[LA01-VE-005]~~

4800, 5085, 5112, 5120

updated 4-24-01 jm

Data sources: Radioassay batch data reports TWCP-4009, 4023, 4024, 4025, 4052, 4078, 4158, 4159, 4212, 4225, 4226, 4303; and Sampling Plan (Rev 3). P/S codes from TWCP-5086 and TWCP-5163.
*The rationale for this MDL cut off (21.5% uncertainty) is given in TWCP-2130.

Table 12. Headspace Gas Data for Target Analytes in Waste Stream TA-55-19

ANALYTE	MDL, ppmv	PRQL, ppmv	No. of Samples analyzed	No. of samples above MDL	No. of samples above PRQL	VOC concentrations, in ppmv			EPA HWN
						Mean	UCL_{90}*	Maximum	based on Assigned AK
Benzene	1.96	10	55	4	0	1.2	1.8	5	F005, D018
Bromoform	2.27	10	55	0	0	1.1	1.1	—	—
Carbon Tetrachloride	2.00	10	55	1	0	1.0	1.0	3	D019
Chlorobenzene	1.93	10	55	1	0	1.0	1.0	2	F002, D021
Chloroform	1.85	10	55	4	0	1.0	1.4	3	D022
1,1-Dichloroethane	1.78	10	55	2	0	1.0	1.9	4	—
1,2-Dichloroethane	2.40	10	55	0	0	1.2	1.2	—	—
1,1-Dichloroethene	2.74	10	55	0	0	1.4	1.4	—	—
Cis-1,2-Dichloroethylene	2.06	10	55	0	0	1.0	1.0	—	—
Ethyl Benzene	1.72	10	55	0	0	0.9	0.9	—	F003
Ethyl Ether	1.30	10	55	0	0	0.65	0.65	—	F003
Methylene Chloride	1.97	10	55	11	8	8.7	18.1	100	F002
1,1,2,2-Tetrachloroethane	1.62	10	55	0	0	0.8	0.8	—	—
Tetrachloroethene	1.44	10	55	0	0	0.7	0.7	—	F002, D039
Toluene	1.67	10	55	33	11	6.5	8.5	51	F005
1,1,2-Trichloro 1,2,2-trifluoroethane (Freon-113)	1.79	10	55	1	1	1.7	1.7	44	F002
1,1,1-Trichloroethane	1.82	10	55	1	0	1.0	1.0	4	—
Trichloroethene	1.31	10	55	0	0	0.7	0.7	6.0	F002, D040
m-Xylene and p-xylene	3.62	10	55	0	0	1.8	1.8	—	F003
o-Xylene	1.90	10	55	0	0	0.95	0.95	—	F003
Acetone	16.12	100	55	31	13	69.7	91.2	410	F003
Butanol	8.78	100	55	1	0	4.8	4.8	29	—
Methanol	11.42	100	55	10	0	14.6	24.3	84	F003
Methyl ethyl ketone	18.42	100	55	4	0	10.1	12.6	23	F005, D035
Methyl isobutyl ketone	16.05	100	55	0	0	8.0	8.0	—	—

Source: TWCP-4722; VOC target analyte list for debris waste from WIPP WAP, Table B3-2.

ppmv, part per million by volume; MDL, Method Detection Limit; UCL90, 90% Upper Concentration Limit

PRQL, Program Required Quantitation Limit;

— Not applicable

* For samples with concentrations below the MDL, UCL_{90} concentrations are calculated by assuming concentrations were half of the MDL values as determined in the MDL study dated 6/19/00 (TWCP-3248).

Table 13. Headspace Gas Data For Flammable VOCs, Hydrogen and Methane in Waste Stream TA-55-19

ANALYTE	Lower Explosive Limit (LEL)	No. of Samples analyzed	No. of samples above MDL	Maximum measured concentration (ppmv)	Evidence for presence of gas in waste	
					Gas data	AK
Acetone	2.5%	55	31	410	X	X
Benzene	1.2%	55	4	5	X	X
Butanol	1.4%	55	1	29	X	X
Chlorobenzene	1.3%	55	1	2	X	X
Cyclohexane	1.3%	55	0	—	—	—
1,1-Dichloroethane	5.4%	55	2	4	X	—
1,2-Dichloroethane	6.2%	55	0	—	—	—
1,1-Dichloroethene	6.5%	55	0	—	—	X
Cis-1,2-Dichloroethylene	5.6%	55	0	—	—	—
Ethyl Benzene	0.8%	55	0	—	—	X
Ethyl Ether	1.9%	55	0	—	—	X
Methanol	6.0%	55	10	84	X	X
Methyl ethyl ketone	1.4% at 200 °F	55	4	23	X	X
Methyl isobutyl ketone	1.2% at 200 °F	55	0	—	—	—
Toluene	1.1%	55	33	51	X	X
1,3,5-Trimethylbenzene	Not known	55	0	—	—	—
1,2,4-Trimethylbenzene	0.9%	55	0	—	—	—
m-Xylene and p-xylene	1.1%	55	0	—	—	X
o-Xylene	0.9%	55	0	—	—	X
Total potentially flammable VOCs in a single container*	—	**55**	—	**473**	**X**	**X**
Hydrogen*	4%	55	32	0.38%	X	X
Methane*	5.3%	55	0	—	—	X

Source: TWCP-4722

ppmv, part per million by volume; MDL, Method Detection Limit

LEL, Lower explosive (flammable) ~~limit~~ in air, % by volume (at room temperature); data from NIOSH Pocket Guide to Chemical Hazards (TWCP-____)

— Not applicable or not detected

* WAC requirements state that a waste container cannot be shipped if its headspace gas concentration exceeds 500 ppm for total flammable VOCs, 5% for hydrogen, or 500 ppm for methane concentration.

** The average flammable VOC concentration is 128 ±101 ppm (TWCP-4722). Gases that were below detection are taken into account in this calculation by assuming they are present at concentrations that are equal to half of the MDL values.

ACCEPTABLE KNOWLEDGE ROADMAP

Waste Stream: TA-55-19 and TA-55-20.

Documents are in the TWCP RMDC Center.

TWCP Record No.	Information Category Code	Information	Source	Summary	Limitations
TWCP-	A	Reconciliation between AK, VE and RTR data for drum from waste stream TA-55-20 (per Sampling Plan, R3)	LA00-3.4.1-005	VE, AK and RTR data on WMC, number and types of packaging layers, TRUCON code, and waste items in drum	VE batch data report still in Project-level review
TWCP-4800	A	Reconciliation between AK, VE and RTR data for drum from waste stream TA-55-19 (per Sampling Plan, R3)	LA00-3.4.1-006	VE, AK and RTR data on WMC, number and types of packaging layers, TRUCON code, and waste items in drum	~~VE batch data report still in Project-level review~~ None
TWCP-5112	A	Reconciliation between AK, VE and RTR data for drum from waste stream TA-55-19 (per Sampling Plan, R3)	LA01-VE-001	VE, AK and RTR data on WMC, number and types of packaging layers, TRUCON code, and waste items in drum	~~VE batch data report still in Project-level review~~ None
TWCP-	A	Reconciliation between AK, VE and RTR data for drum from waste stream TA-55-19 (per Sampling Plan, R3)	LA01-VE-002	VE, AK and RTR data on WMC, number and types of packaging layers, TRUCON code, and waste items in drum	VE batch data report still in Project-level review
TWCP-5085	A	Reconciliation between AK, VE and RTR data for drum from waste stream TA-55-19 (per Sampling Plan, R3)	LA01-VE-004	VE, AK and RTR data on WMC, number and types of packaging layers, TRUCON code, and waste items in drum	~~VE batch data report still in Project-level review~~ None
TWCP-5120	A	Reconciliation between AK, VE and RTR data for drum from waste stream TA-55-19 (per Sampling Plan, R3)	LA01-VE-005	VE, AK and RTR data on WMC, number and types of packaging layers, TRUCON code, and waste items in drum	~~VE batch data report still in Project-level review~~ None
TWCP-	A	Reconciliation between AK, VE and RTR data for drum from waste stream TA-55-20 (per Sampling Plan, R3)	LA00-3.4.1-003	VE, AK and RTR data on WMC, number and types of packaging layers, TRUCON code, and waste items in drum	VE batch data report still in Project-level review

* Information Category Codes: A = forms intended for use in waste certification, B = data from controlled databases and published documents, C = unpublished data, and D = interviews, memos, and letters

TWCP Record No.	Information Category Code	Information	Source	Summary	Limitations
TWCP-	A	RTR data for drums from waste stream TA-55-19 or TA-55-20	LA01-RTR-006	RTR data on prohibited items, WMC, packaging layers, and estimated volumes and weights of waste material parameters in drum	Sampling plan (Rev 3) referenced in this batch data report may not be up-to-date with respect to waste stream assignments for containers. RTR batch data report still in Project-level review
TWCP- 5110	A	RTR data for drums from waste stream TA-55-19 or TA-55-20	LA01-RTR-007	RTR data on prohibited items, WMC, packaging layers, and estimated volumes and weights of waste material parameters in drum	Sampling plan (Rev 3) referenced in this batch data report may not be up-to-date with respect to waste stream assignments for containers. ~~RTR batch data report still in Project-level review~~
TWCP- 4797	A	RTR data for drums from waste stream TA-55-19 or TA-55-20	LA01-RTR-008	RTR data on prohibited items, WMC, packaging layers, and estimated volumes and weights of waste material parameters in drum	Sampling plan (Rev 3) referenced in this batch data report may not be up-to-date with respect to waste stream assignments for containers. RTR batch data report still in Project-level review
TWCP- 5121	A	RTR data for drums from waste stream TA-55-19 or TA-55-20	LA01-RTR-009	RTR data on prohibited items, WMC, packaging layers, and estimated volumes and weights of waste material parameters in drum	Sampling plan (Rev 3) referenced in this batch data report may not be up-to-date with respect to waste stream assignments for containers. ~~RTR batch data report still in Project-level review~~
TWCP- 5147	A	RTR data for drums from waste stream TA-55-19 or TA-55-20	LA01-RTR-013	RTR data on prohibited items, WMC, packaging layers, and estimated volumes and weights of waste material parameters in drum	Sampling plan (Rev 3) referenced in this batch data report may not be up-to-date with respect to waste stream assignments for containers. ~~RTR batch data report still~~ in ~~Project-level review~~
~~TWCP-~~	A				

* Information Category Codes: A = forms intended for use in waste certification, B = data from controlled databases and published documents, C = unpublished data, and D = interviews, memos, and letters

Edit round #7

TA-55 PLUTONIUM FACILITY
ACCEPTABLE KNOWLEDGE REPORT

REPORT TITLE: Acceptable Knowledge Summary Report for Waste Streams TA-55-19 and TA-55-20

REPORT NUMBER: TWCP-AK-2.1-008,R.2 (LA-UR-00-5727)

WASTE GENERATED FROM WASTE STREAMS: TA-55-19, Lot TA-55-19A, and TA-55-20

Tasks for June
- Check if P120 approved. If so, drop TA-55-19A
- email text on Cs-137 bullet
- Check with Foxx about Default TRUCON code for > 1/97
- Incompatibility determination — end of page to
- Reference for NIOSH Pocket Guide

EFFECTIVE DATE: _____

NEXT REVIEW DATE: _____

DOCUMENT PREPARER:

Doc. Jim's comments on Cm-244, Cs-137, Pa-231 as TWCP-record

NAME _____ DATE _____

APPROVALS:

INDEPENDENT TECHNICAL REVIEWER/EDITOR _____ DATE _____

SITE PROJECT MANAGER _____ DATE _____

WASTE CERTIFICATION OFFICIAL _____ DATE _____

SITE PROJECT QA OFFICER _____ DATE _____

FACILITY REPRESENTATIVE _____ DATE _____

Recommend extending period of applicability of HWN to 2 years following reported cessation of its use — based on ~~length of time a single drum remains open in WM area~~ difference between closure date of drum and date of generation of waste item range of generation dates of waste items in single drum

© 2000, 2001 University of California

Tables **Page**

1 Feed Materials for Processes Contributing to Waste Streams TA-55-19 and TA-55-20 19

2 Average Isotopic Content of Plutonium Material Types and Enrichments 23

3 Average Isotopic Content of Uranium Material Types and Enrichments 23

4 Use of RCRA-Regulated Inorganic Chemicals in TA-55 Processes 30

5 Use of RCRA-Regulated Organic Chemicals in TA-55 Processes 32

6 Maximum Layers of Confinement for be Used for TA-55-19 and TA-55-20 Waste Containers in the Absence of More Specific Waste Characterization Data 44

7 RTR Data for Waste Streams TA-55-19 and TA-55-20 .....

8 VE Data for Waste Streams TA-55-19 and TA-55-20 .....

9 Radioassay Data for Waste Streams TA-55-19 and TA-55-20 .....

10 Headspace Gas Data for Target Analytes in Waste Stream TA-55-~~20~~ 19 .....

11 Headspace Gas Data for Flammable VOCs, Hydrogen and Methane in Waste Stream TA-55-19 .....

Attachments

1 Acceptable Knowledge Roadmap (11 pages)

2 LANL and TA-55 Site Maps (2 pages)

3 Simplified Process Flow Diagrams (8 pages)

4 Waste Generator Forms for TRU Waste ~~Forms~~ (5 pages)

5 Chemical Waste Disposal Request Form (1 page)

P/S Code	P/S Name	AK Process Report and Primary Report Section in which P/S Code is Described*		RCRA Listings for Combustible Debris
LG1	Non combustible leach	Nitrate Operations	3.4.2, 3.4.6, Att. 4	D006, D008
LG2	Hydroxide cake dissolution	Nitrate Operations	3.4.2, 3.4.6, Att. 4	D006, D007, D008, D009, D011
LI	XF6 experimental measurements	Miscellaneous Operations	3.4.2, Att. 4	D005, D006, D007, D008, D009, D011
LIBS	Laser-induced breakdown spectroscopy system	Miscellaneous Operations	3.4.5, Att. 4	
LR	Ion exchange	Nitrate Operations	3.4.3, Att. 4	D006, D007, D008, D009, D011
MA	Machining	Metal Operation Processes	3.4.2, Att. 4	D035, D040, F001, ~~F002~~F005
MAG	Magnetic separation	Nitrate Operations	3.4.1, Att. 4	
MAS	RD&D experimental processes	Nitrate Operations	3.4.1, Att. 4	
MB	Nitric dissolution of molten salts	Chloride Operations Nitrate Operations	3.4.2, Att. 4 3.4.2, 3.4.6, Att. 4	D007, D008, D009
MBC	Crystal	Metal Operation Processes	3.4.3, Att. 4	
ME	Metallography	Miscellaneous Operations	3.4.10, Att. 4	D007, D040, F003
MELL	Mediated electro-oxidation of LLW	Nitrate Operations	3.4.2, Att. 4	D006, D007, D008, D009, D011
MF	Metals furnace	Nitrate Operations	3.4.1, 3.4.6, Att. 4	
ML	Non-Pu metal leach	Nitrate Operations	3.4.2, Att. 4	D006, D008
MO	Metal oxidation, room 429	Pyrochemical Processes	3.4.9, Att. 4	
MOX	Mixed oxide fuel production	Metal Operation Processes	3.4.1, Att. 4	
MP	Metal preparation	Pyrochemical Processes	3.4.1, Att. 4	
MPD	Cascade dissolver	Nitrate Operations	3.4.2, Att. 4	D005, D006, D007, D008, D011
MS	Molten salts purification dissolution	Chloride Operations	3.4.2, Att. 4	D007, D008, D009
MW	Metal working	Metal Operation Processes	3.4.2, Att. 4	
NC	Noncombustible leach	Nitrate Operations	3.4.2, Att. 4	D006, D008
NCD	Nonconfirming drums	Miscellaneous Operations	3.4.9, Att. 4	
NEPTUNIUM	Neptunium	Pyrochemical Processes	3.4.10, Att. 4	
NL	Noncombustible leach	Nitrate Operations	3.4.2, 3.4.6, Att. 4	D006, D008
NR	Nitrate recovery	Nitrate Operations	3.4.2, 3.4.6, Att. 4	
OB	Oxide blending	Metal Operation Processes	3.4.1, Att. 4	
OD	Oxide dissolution	Nitrate Operations	3.4.2, Att. 4	D006, D007, D008
OH	Hydroxide precipitation	Nitrate Operations	3.4.1, 3.4.3, Att. 4	D006, D007, D008, D009, D011

- Drums containing waste from P/S codes AC, AC2, and SA are segregated from this waste stream until the potential applicability of HWN U213 has been resolved ~~(*Acceptable Knowledge Summary Report for Miscellaneous Operations at TA-55* [TWCP-AK-2.1-004]).~~
- Drums containing waste generated from P/S codes SD and SS between 02/98 and 06/98 are segregated as a subset of TA-55-19 due to the potential presence of vanadium pentoxide (EPA HWN P120). (See separate AK summary for waste stream lot TA-55-19A).

Radionuclide Content

These waste streams predominantly contain a variety of plutonium material types with different well-defined isotopic compositions. Americium-241, neptunium-237, and uranium-234 may be present at detectable concentrations as decay products of their plutonium precursors. Some of the processes separate plutonium from americium and uranium. The waste will usually be enriched in americium-241 and uranium-234 relative to plutonium, but may also be depleted in some cases. Some waste may contain uranium from one of several uranium material types, as well as contaminants from uranium-235: its decay daughter, protactinium-231, and fission product cesium-137. Other waste may contain various radionuclides used as feed material for producing radioassay sources, including americium-241, americium-243, cerium-144, curium-244, protactinium-231, neptunium-237, thorium-232, thorium-232 enriched in thorium-230, uranium-233, and depleted uranium.

Primary References for Documentation of Acceptable Knowledge

Process Acceptable Knowledge Summary Report for Chloride Operations at TA-55 (TWCP-AK-2.1-002)

Process Acceptable Knowledge Summary Report for Metal Operation Processes at TA-55 (TWCP-AK-2.1-003)

Process Acceptable Knowledge Summary Report for Miscellaneous Operations at TA-55 (TWCP-AK-2.1-004)

Process Acceptable Knowledge Summary Report for Nitrate Operations at TA-55 (TWCP-AK-2.1-005)

Process Acceptable Knowledge Summary Report for Pyrochemical Processes at TA-55 (TWCP-AK-2.1-006)

Process Acceptable Knowledge Summary Report for Special Processing at TA-55 (TWCP-AK-2.1-007)

- F001, F002, F003 and F005
- D004, D005, D006, D007, D008, D009, D010, D011, D018, D019, D021, D022, D035, D038, D039, D040
- P120
- Drums containing waste from P/S codes AC, AC2, and SA are segregated from this waste stream lot until the potential applicability of HWN U213 ~~(tetrahdrofuran)~~ has been resolved.

Radionuclide Content

These waste streams predominantly contain a variety of plutonium material types with different well-defined isotopic compositions. Americium-241, neptunium-237, and uranium-234 may be present at detectable concentrations as decay products of their plutonium precursors. Some of the processes separate plutonium from americium and uranium. The waste will usually be enriched in americium-241 and uranium-234 relative to plutonium, but may also be depleted in some cases. Some waste may contain uranium from one of several uranium material types, as well as contaminants from uranium-235: its decay daughter, protactinium-231 and fission production cesium-137. Other waste may contain various radionuclides used as feed material for producing radioassay sources, including americium-241, americium-243, cerium-144, curium-244, protactinium-231, neptunium-237, thorium-232, thorium-232 enriched in thorium-230, uranium-233, and depleted uranium.

Primary References for Documentation of Acceptable Knowledge

Process Acceptable Knowledge Summary Report for Chloride Operations at TA-55 (TWCP-AK-2.1-002)

Process Acceptable Knowledge Summary Report for Metal Operation Processes at TA-55 (TWCP-AK-2.1-003)

Process Acceptable Knowledge Summary Report for Miscellaneous Operations at TA-55 (TWCP-AK-2.1-004)

Process Acceptable Knowledge Summary Report for Nitrate Operations at TA-55 (TWCP-AK-2.1-005)

Process Acceptable Knowledge Summary Report for Pyrochemical Processes at TA-55 (TWCP-AK-2.1-006)

Process Acceptable Knowledge Summary Report for Special Processing at TA-55 (TWCP-AK-2.1-007)

contaminants of uranium-235: its decay daughter, protactinium-231 and fission product cesium-137. Other waste may contain various radionuclides used as feed material for producing radioassay sources, including americium-241, americium-243, cerium-144, curium-244, protactinium-231, neptunium-237, thorium-232, thorium-232 enriched in thorium-230, uranium-233, and depleted uranium.

Primary References for Documentation of Acceptable Knowledge

Process Acceptable Knowledge Summary Report for Chloride Operations at TA-55 (TWCP-AK-2.1-002)

Process Acceptable Knowledge Summary Report for Metal Operation Processes at TA-55 (TWCP-AK-2.1-003)

Process Acceptable Knowledge Summary Report for Miscellaneous Operations at TA-55 (TWCP-AK-2.1-004)

Process Acceptable Knowledge Summary Report for Nitrate Operations at TA-55 (TWCP-AK-2.1-005)

Process Acceptable Knowledge Summary Report for Pyrochemical Processes at TA-55 (TWCP-AK-2.1-006)

Process Acceptable Knowledge Summary Report for Special Processing at TA-55 (TWCP-AK-2.1-007)

In addition, each major waste form includes provisions for small quantities of unspecified waste with similar properties. This provision is necessary in order to allow for infrequently encountered waste items.

3.2.2 Waste Stream Delineation for TA-55

From the beginning of operations at TA-55, the physical description of each waste item generated was documented on a Waste Origination and Disposition Form (WODF) by the waste generator according to controlled procedures. The P/S code for waste items was sometimes also documented on this form. Starting in 1987, the TA-55 Plutonium Facility began its current system of tracking waste items both by the process from which they originated as well as by their material content. Waste items are labeled with an item identification (ID) code that contains information on the waste material parameter of the item and an embedded P/S code that corresponds to the process that produced the waste item although recording of P/S codes was consistent until about 1990). In the packaging process, a standard form, the Discardable Waste Log Sheet (DWLS), was used to list each ID code and record its matrix material. This form was signed by the waste packager and approved by quality assurance personnel. Both the WODF and DWLS for each TRU waste drum have been maintained as hard copy records by the generator. For waste stream TA-55-19, example copies of these container records (for combustible debris) are included in Attachment 4. Note that this waste container (LA00000056636) contains waste items generated by three different P/S codes (CXL, ED, and SC), each with its own completed WODF.

Waste items are packaged into waste containers based on the material content of the waste, without regard to P/S code. This practice complicates AK tracking because a single waste container can include waste items from several P/S codes. In the Sampling Plan, TA-55 wastes have been assigned to waste streams based on the waste segregation schemes used by TA-55:

- First by radioisotope content (Pu-238 or Pu-239 material type)
- Then by material matrix (combustible, noncombustible, metal, glass, etc. waste types)
- Then by hazardous waste status (mixed, non-mixed, or special case waste streams)

Waste stream delineation was performed using waste generator information (such as the WODF and DWLS) that has been compiled in an electronic data base that is part of the Sampling Plan. Because waste

Feed Material	Potential Presence of RCRA-Regulated Substances	P/S Codes, Listed by Process
Experimental R&D feed materials; various isotopes and isotopic mixtures of actinides in various matrices	Variable purity	Miscellaneous operations: AD, CV, EXT, HRS, RASS, SA, XES, XP Nitrate operations: MAS
Hydroxide cakes (process output from P/S codes CLS, CW, CXL, DO, POSM, PRR)	Typically contaminated with RCRA-regulated heavy metals cadmium (D006), lead (D008), mercury (D009), silver (D011), and possibly chromium (D007)	Miscellaneous operations: AD Nitrate operations: CD, HCD, HD, LG2 Special processing: DO, POSM
Miscellaneous materials contaminated with Pu (e.g. sand, slag, tools, crucibles, metal, glass, plastic, labware, scrap, rags, glovebox sweepings, pump oils, HEPA filters)	May be contaminated with RCRA-regulated heavy metals silver (D011), cadmium (D006), mercury (D009), lead (D008), and possibly chromium (D007)	Miscellaneous operations: APD Nitrate operations: ATL, BAC, CPOD, CR, ED, ETD, GMS, HGMS, IS (combustible material), LG1 (non-combustible material), MAG, MAS, MELL (cellulosic material), ML (metal equipment), NC (non-combustible material), NL (non-combustible material), PA (glovebox sweepings), PAF, RO (organics), SC, SP, TDC (cellulosic material), VC, ZD Pyrochemical processes: PK (hardware, metal, anode chips from other P/S codes) Special processing: ACD, DO, SB, SL
MSE salts	Typically fairly pure, suspect contaminated with barium (D005) but no other RCRA substances present	Chloride operations: MB, MS Miscellaneous operations: XP Nitrate operations: MB, PS
Neptunium residues from vault	No RCRA-regulated substances	Pyrochemical processes: Neptunium (only active in 1993)
Pu chlorides and fluorides	Variable purity	Miscellaneous operations: FDL, SO Pyrochemical processes: ER, SD, SS Special processing: RM

Table 2. Average Isotopic Content of Plutonium Material Types and Enrichments

Material Type (MT)	Plutonium Isotope (Weight %) and Half-Life						Upper Bounds for Dimensionless Weight Ratios[a]		
	Pu-238 (87.74 yr)	Pu-239 (24120 yr)	Pu-240 (6564 yr)	Pu-241 (14.35 yr)	Pu-242 (376,300 yr)	Pu-244 (8.26 x 10^7 yr)	U-234/ Total Pu	U-235/ Total Pu	Am-241/ Total Pu
MT 51	0.006	96.77	3.13	0.076	0.018	—	1×10^{-5}	0.001	0.0006
MT 52	0.01	93.78	6	0.2	0.02	—	2×10^{-5}	0.001	0.002
MT 53	0.03	91.08	8.45	0.366	0.071	—	7×10^{-5}	0.0009	0.003
MT 54	0.046	87.42	11.5	0.81	0.22	—	0.0001	0.0009	0.007
MT 55	0.06	83.88	14.73	1.03	0.304	—	0.0002	0.0009	0.009
MT 56	0.061	81.9	16.51	1.18	0.355	—	0.0002	0.0009	0.01
MT 57	0.433	74.63	20.7	2.55	1.69	—	0.001	0.0008	0.02
MT 42									
84%	1.02	1.37	10.32	3.13	84.14	0.02	0.003	1×10^{-5}	0.03
90%	0.72	1.26	6.4	1.86	89.77	—	0.002	1×10^{-5}	0.02
95%	0.45	0.56	2.47	0.906	95.58	0.029	0.001	6×10^{-6}	0.008
MT 83									
83%	83.89	13.8	1.9	0.32	0.09	—	0.26	0.0002	0.003
89%	89.26	10.07	0.633	0.021	0.015	—	0.28	0.0001	0.0002

[a] These ratios are calculated under the assumption that no chemical fractionation occurs and, hence, are intended to be used to identify fractionation when it is present by comparing these upper bounds to radioassay data.

Source: TWCP-698

move these 2 lines to the end of the Second bullet on the following page.

~~Move to end of previous page just for look~~

The primary uranium material type inputs for reactor fuel development activities and for pit disassembly at TA-55 are listed in Table 3.

Table 3. Average Isotopic Content of Uranium Material Types and Enrichments (Weight %)

Material Type	U-234	U-235	U-236	U-238
MT 12	0.0015	0.23	0.008	99.77
MT 35	0.36	37.6	0.14	61.9
MT 36	0.63	62.44	0.18	36.75
MT 38	1.03	93.04	0.41	5.53
MT 39	1.32	97.52	0.17	0.99

Source: TWCP-698

- Np-237, the decay product of Am-241 (half-life, 458 yr), is expected to be present mostly in minor amounts in most debris waste from processes at TA-55.

- In general, uranium and its isotopes are expected to be present only at trace levels, if at all, if the feed material did not purposely contain uranium. The primary uranium - - -

move 2 lines from previous page

- U-235 ingrowth from the decay of Pu-239 (half-life, 24,120 years) would be negligible due to the long half-life of Pu-239.

- U-234 would be present in MT 83 (and to a lesser extent in other Pu material types) as a decay product of Pu-238 (half-life, 87.74 years) (Table 2).

- Protactinium (Pa)-241, the ~~alpha-decay~~ decay-chain daughter of U-235, is expected to be present in trace amounts in some TA-55 wastes due to its widespread presence as of a contaminant in TA-55 operations.

I'll email you text to replace this bullet

- Cesium (CS)-137, i.e. ~~fission~~ is a product of ~~U-235~~ the spontaneous fission of Pu-238, Pu-239 and especially Pu-240, as well as a trace contaminant in purified Pu from the production reactors. The latter case, the remaining Cs might be on the order of 0.5 ng/g U (mass ratio, $.5 \times 10^{-18}$). is expected to be present at detectable levels in some TA-55 wastes, due to its widespread presence as a contaminant in TA-55 operations. -

In general no ~~No~~ correlation is expected to be seen among the different radio elements, Pu, Np, U, Pa or Am.

~~Although they are products of U-235 fission and decay, Cs-137 and Pa-231 are not expected to show any correlation with U-235 concentrations or even with the presence or absence of this isotope.~~ The differences in valence states and chemical affinities ~~among these~~ elements is expected to result in substantial fractionation during several TA-55 processes, including ion exchange, solvent extraction, hydroxide precipitation, and dissolution, ~~and exposure to very high temperatures~~.

~~In addition,~~ secondary radionuclides will also be present in the waste due to processing of feed materials other than Pu (TWCP-698). Additional radionuclides expected to be present in each process were reviewed by a panel of experts at TA-55 and compiled in a memo according to P/S code (TWCP-882), as summarized in Table 4. This list includes Am-241, Am-243, cerium (Ce)-144, curium (Cm)-244, Np-237, Pa-231, Pu-238, Th-230, Th-232, U-233, U-235, and U-238.

The possible presence of Cm-244 in TRU waste is of particular interest to radioassay operations because it can affect the choice of radioassay procedure to use for optimal results. Cm-244 was introduced in TA-55 operations in P/S code DOP, which started in 1988. Material outputs from this process sometimes were sent to P/S codes IS or WE. Cm-244 could also be part of debris waste under P/S code CA because both operations took place in the 300 area. Because only one room in this

3.6.3.1 *Acids and bases*. Acids used in the TA-55 processes covered in this report are ascorbic acid, formic acid, hydrochloric acid, hydrofluoric acid, nitric acid, oxalic acid, perchloric acid, stearic acid, sulfuric acid, and superacids (e.g., HSO_3F). Bases used in these processes are calcium hydroxide, magnesium hydroxide, potassium hydroxide, and sodium hydroxide. No EPA HWNs are applicable to the use of these chemicals in the TA-55 processes for the following reasons:

- D002 (corrosivity) does not apply to the solid debris waste because there are no free liquids in this waste.

- D001 (ignitability) does not apply to wastes in waste streams TA-55-19 or TA-55-19A despite the use of spent non-halogenated solvents (HWN F003) and the possible production of perchlorate salts in perchloric acid solutions for the following reasons:

  - Perchloric acid solutions are sent to cement fixation.
  - Any perchlorate salts that might be present on rags are removed when the rags are rinsed before being discarded. ~~The rinse water is sent to cement fixation.~~
  - Solutions containing spent non-halogenated solvents are sent to the RLWTF if they are below the DL for Pu.
  - Solutions containing spent solvents and above the DL for Pu are further treated by aqueous recovery processes as part of routine chloride and nitrate operations. Aqueous recovery involves dissolving any solid Pu in hydrochloric or nitric acid, followed by ion exchange to extract the Pu. The processed solutions are below the DL for Pu and are either sent to the RLWTF or to the evaporator for volume reduction. Evaporator bottoms are fixed in cement, a waste form for which ignitability is not a concern.
  - Rags, if contaminated with spent solvents and above the DL for Pu, are thermally decomposed, which destroys any organic component.
  - Although contaminated rags that are below the DL for Pu are discarded as combustible debris, headspace gas analyses support the expectation that the solvents are not present in the packaged waste at levels of concern.

3.6.3.5 *Organic chemicals.* The following organic chemicals used in the TA-55 processes are not identified as having hazardous characteristics in 40 CFR Part 261, including Appendix VIII in that regulation: 1-propanol, 3-in-1 household oil, acetonitrile, alkylating agents (unspecified), bromobenzene, bromocresol purple, carbon tetrafluoride, Citrapeel, DBBP (dibutyl butyl-phosphonate), DBBP (dibutyl butyl-phosphonate)/Isopar (isoparaffinic hydrocarbon solvent), diethyl oxalate, dihexyl n,n-diethylcarbamoylmethyl phosphonate (DHDCMP), diisopropyl benzene, Dow Corning 2000 Oil, Dowanol 80 (long-chain alcohol), ethanol, ethylene glycol, Fantastic, formamide, Fomblin brand pump oil, GoJo cleaner (kerosene derivative), hexane, hydrazine dihydrochloride, hydrazine hydrochloride, ion exchange resin, isopropanol, kerosene, Metalprep 79 (phosphoric acid-based metal cleaner), MolyKote, n-dodecane, Nuetracleaner #1, Nuetracleaner #2, octylphenyl diisobutyl carbamoylmethyl phosphine oxide (CMPO), oil (engine), organic liquid emulsifier, organicstrip, perchlorocarbons, phenolphthalein, phosphate buffer solution, phosphine oxide, phthalate buffer solution, polyethylene glycol, polyoxyethylene-20-sorbitan laurate (surfactant), SF-2I (as coolant), silicon adhesive, silicon defoamer, sugar, surfactants, tetraethylamine hydrochloride, tetraethylamine hydroxide, tetraethylammonium hydroxide, Texaco Regal 32 oil (cutting oil), thionyl chloride, tributyl phosphate (TBP), tributyl phosphate (TBP)/Isopar (isoparaffinic hydrocarbon solvent), tributyl phosphate and iodine in kerosene, trioctylphosphine oxide (TOPO), urea, vactra oil, vacuum grease, vacuum pump oil, WD-40, and Windex. U.C. U.C.

Several organic chemicals used in TA-55 processes are identified in 40 CFR Part 261 or in Appendix VIII of that regulation as having hazardous characteristics. Table 5 lists these chemicals, their HWNs, P/S codes in which they were used, and the applicability of the HWNs to the use of these chemicals in TA-55 processes.

4.0 DIVISION OF THE WASTE STREAM INTO LOTS

TA-55-19A is a subset (i.e., lot) of waste stream TA-55-19. Waste in this lot, which is expected to consist of only a few drums, is identical to the rest of the waste stream except for the possibility that the drums may contain vanadium pentoxide (EPA HWN P120), which was used only between 02/01/98 and 06/10/98 in two specific P/S codes.

Organic Chemical and P/S Codes in Which It Was Used	Comments on Applicability of RCRA Codes
Tetrachloroethane (not used)	• No RCRA codes apply to tetrachloroethane, an Appendix VIII chemical. Although it is listed on the chemical inventory for metal operations, it was never used in glovebox operations.
Tetrachloroethylene (P/S codes AD, APD, CSE, CV and SE)	• D039 (tetrachloroethylene) applies to P/S codes AD, APD, CSE and SE in which it was used until 1992. • D039 does not apply to P/S code CV because it was used as a coolant outside the glovebox. • F002 applies to P/S codes AD, APD, CSE and SE. Its use as a solvent in P/S code CSE and SE ended in 1992 • F002 does not apply to P/S code CV because it was only used as a coolant outside the glovebox.
Tetrahydrofuran (P/S codes AC, AC2, and SA)	• U213 may possibly apply to P/S codes AC, AC2, and SA. Its applicability is currently under investigation.
Toluene (P/S codes AC, AC2 and SA)	• F005 applies to P/S codes AC, AC2 and SA because toluene was used as a solvent.
Trichloroethylene (P/S codes CK, EL, FF, MA, ME, and XO)	• D040 (trichloroethylene) applies to P/S codes EL, FF, MA, ME, and XO • D040 does not apply to P/S code CK because this chemical was used as a coolant outside the glovebox. • F00~~2~~1 applies to P/S code MA, in which trichloroethylene was used as a degreaser during final cleaning of metal parts from 1979 to 1992, resuming again in February 2000. • F002 does not apply to P/S codes EL or FF, in which it was used as a lubricant for a cutting saw, not as a solvent.

- Rubber and Teflon-based products used in the operations, such as rubber gloves, Teflon tape, gaskets, stoppers, etc.

The following waste material parameter codes (WMP) are assigned to waste streams TA-55-19 and TA-55-20 based on this information and knowledge of waste generation practices described in the TA-55 Waste Management Procedures (see Section 3.2):

- Cellulosics
- Plastics (waste materials)
- Rubber
- Steel (packaging materials)
- Plastics (packaging materials)
- Iron-based metals/alloys (less than 5 percent by volume)

These WMP codes have been verified with WIPP-compliant waste characterization data from real-time radiography and visual examination (Section 14).

8.0 ASSIGNMENT OF EPA HAZARDOUS WASTE NUMBERS

8.1 F, K, P, and U Listings

No K-listings apply to any of the debris waste generated by the P/S codes covered by this report.

The following P/S codes require HWN assignments due to the presence or use of F-listed chemicals. In many cases, the applicability of the HWN is limited to waste generated during a specific period, as discussed in the appropriate process AK report.

• AC, AC1, AC2, AC3	F002, F005
• AD	F002, F003
• APD	F002, F003
• CF	F002, F003
• CLS	F002, F003
• CSE	F002
• CW	F002, F003
• DA	F002
• HP	F002, F003
• MA	F001, ~~F002~~, F005
• SA	F002, F003, F005
• SE	F002
• WM, X0, XO	F001, F002, F005

In addition, debris waste generated under P/S codes SD and SS between 02/01/98 and 06/10/98 is assigned EPA HWN P120 (vanadium pentoxide).

PTS	D005, D006, D007, D008, D011
PUB	D007, D008, D009
PX	D006, D008, D019
RA	D005 (applies only to zinc metal buttons)
RASS/RSS	D004, D005, D006, D007, D008, D009, D010, D011, D019
RC	D005, D006, D007, D008, D011
RO	D006, D008, D040
RR	D006, D007, D008, D009, D011
SA	D007, D009, D018, D038
SB	D005, D006, D007, D008, D011
SC	D005, D006, D007, D008, D011
SE	D007, D008, D009, D039
SL	D005, D006, D007, D008, D011
SO	D004, D005, D006, D007, D008, D009, D010, D011
SP	D007
SS	D006, D008
SSD	D006, D007, D008
SSMD	D009 (D listing applies only from 06/94 to 08/94)
STF	D007
TDC	D005, D006, D007, D008, D011
VC	D006, D008
VP1, VP3	D009 (D listing applies only from 09/85 to 10/85)
VU, VUL	D005, D008
WM, X0, XO	D007, D008, D009, D022, D035, D040 (These HWNs are assigned in order to be conservative as discussed in *Acceptable Knowledge Summary Report for Miscellaneous Operations at TA-55* (TWCP-AK-2.1-004,R.2, Section 3.4.9))
XES	D004, D005, D006, D007, D008, D009, D010, D011
XP	D004, D005, D006, D007, D008, D009, D010, D011

to all three codes

Make this an indented note

9.0 VERIFICATION THAT IGNITABLE, REACTIVE, AND CORROSIVE WASTES WERE EXCLUDED

According to the WIPP WAP, "The prohibition of liquids and containerized gases prevents the shipment of corrosive, ignitable, or reactive wastes." The waste streams covered by this AK report have no listings for corrosivity, reactivity, or ignitability. Administrative controls on waste packaging were in place at various times to ensure the absence of such items from the waste stream.

- Liquids were prohibited from solid waste streams at TA-55 when the facility opened in January 1978. A waste management procedure written to cover operations at the

- confirmation of WMC S5300 for 98.9 percent of the drums examined
- identification of WMC discrepancies for 3 containers (1.1 percent of the drums examined), which must be reassigned to other waste streams
- identification of potentially sealed containers > 4 liters in 13 percent of the drums, for which PWRs were submitted
- confirmation of the absence of any other prohibited item or condition requiring a PWR
- confirmation of 4 or fewer packaging layers for 52 percent of the drums. Plastic packaging layers for the remaining 48 percent were indeterminate due to the large amount of horsetails present in the drums
- confirmation of the waste stream description:
- 97 percent of the drums contain more than 75 wt percent combustible waste;
- 86 percent of the drums contain less than 5 wt percent metal waste, and 94 percent contain less than 10 wt percent metal waste.

Changes in waste stream assignment because of characterization data are documented in accordance with *Waste Characterization Data Reconciliation with Acceptable Knowledge* (TWCP-DTP-2.1-064).

AK information resolved an apparent WMC discrepancy for several drums in waste stream TA-55-19 which contained material identified as metal by the RTR operator, thereby leading to an apparent WMC of S5110 (for metal debris) (NCR-00-013, NCR-00-025, NCR-00-026, NCR-00-027, NCR-00-028). After reviewing with the generator how these drums were packaged, the generator determined that these drums were packaged with very dense in-house fabricated plastic material (Kynar, also known as PVDF) used to line gloveboxes and build equipment in chloride operations starting in about 1988. Hence, the WMC S5300 was correct.

TWCP-4190
3288
3289
3290
3291

14.2 Visual Examination Data

VE data are used to confirm AK information on waste stream descriptions, WMC, the absence of prohibited items, the number and type of confining layers, and the relative volumes and weights of waste matrix parameters. AK packaging and WMC information have been evaluated by VE for about 22 containers so far in waste streams TA-55-19 and TA-55-20, in accordance with *Reconciliation of Visual Examination and Radiography Information* (TWCP-QP-1.1-028). These 22 drums were packaged between 11/85 and 8/97 (Sampling Plan). P/S codes are available for the waste items packaged in these drums, as documented in radioassay batch data reports (TWCP-4024, TWCP-4025, TWCP-4052, TWCP-

Data sources: Radioassay batch data reports TWCP-4009, 4023, 4024, 4025, 4052, 4078, 4158, 4159, 4212, 4225, 4226, 4303; and Sampling Plan (Rev 3)
*The rationale for this MDL cut off (212.5% uncertainty) is given in TWCP-2130.

21.5

Edit round #6 JTM 4/10/01

TA-55 PLUTONIUM FACILITY
ACCEPTABLE KNOWLEDGE REPORT

REPORT TITLE: Acceptable Knowledge Summary Report for Waste Streams TA-55-19 and TA-55-20

checked against Round #7 draft JTM 4/16/01

REPORT NUMBER: TWCP-AK-2.1-008,R.2 (LA-UR-00-5727)

WASTE GENERATED FROM WASTE STREAMS: TA-55-19, Lot TA-55-19A, and TA-55-20

See new Edits on pages up to page ~~26~~ 27, and then just pages 29, 39 and 61 (marked with stickies)

EFFECTIVE DATE: _____

NEXT REVIEW DATE: _____

DOCUMENT PREPARER:

NAME _____ DATE _____

APPROVALS:

INDEPENDENT TECHNICAL REVIEWER/EDITOR _____ DATE _____

SITE PROJECT MANAGER _____ DATE _____

WASTE CERTIFICATION OFFICIAL _____ DATE _____

SITE PROJECT QA OFFICER _____ DATE _____

FACILITY REPRESENTATIVE _____ DATE _____

© 2000, 2001 University of California

Tables **Page**

1 Feed Materials for Processes Contributing to Waste Streams TA-55-19 and TA-55-20 19

2 Average Isotopic Content of Plutonium Material Types and Enrichments 23

3 Average Isotopic Content of Uranium Material Types and Enrichments ~~(Weight %)~~ 23

4 Use of RCRA-Regulated Inorganic Chemicals in TA-55 Processes 30

5 Use of RCRA-Regulated Organic Chemicals in TA-55 Processes 32

6 Maximum Layers of Confinement for be Used for TA-55-19 and TA-55-20 Waste Containers in the Absence of More Specific Waste Characterization Data 44

line spacing between "paragraphs"

7 RTR data for waste streams TA-55-19 and TA-55-20 .....

8 VE data for waste streams TA-55-19 and TA-55-20 .....

9 Radioassay data for waste streams TA-55-19 and TA-55-20 .....

10 Headspace gas data for target analytes in waste stream ta-55-~~20~~ 19 .....

11 Headspace gas data for flammable VOCs, Hydrogen and methane in waste stream TA-55-19 .....

Attachments

= means u.c. (upper case)

1 Acceptable Knowledge Roadmap (11 pages)

2 LANL and TA-55 Site Maps (2 pages)

3 Simplified Process Flow Diagrams (8 pages)

4 TRU Waste ~~Forms~~ (5 pages)

5 Chemical Waste Disposal Request Form (1 page)

Waste Generator Forms for

ACRONYMS

AK	acceptable knowledge
ARIES	Advanced Recovery and Integrated Extraction System
CFR	*Code of Federal Regulations*
CMPO	octylphenyldiisobutylcarbamoylmethylphosphine oxide
C–N–O	carbon–nitrogen–oxygen
CSMO	Central Scrap Management Office
DBBP	dibutyl butylphosphonate
DCHP	dicesium hexachloroplutonate
DHDCMP	dihexyl N,N-diethylcarbamoylmethyl phosphonate
DL	discard limit
DOE	U.S. Department of Energy
DOR	direct oxide reduction
DTP	detailed technical procedure
DWLS	Discardable Waste Log Sheet
EPA	U.S. Environmental Protection Agency
F	Chemical symbol for Fluoride, or RCRA hazardous waste number prefix for hazardous wastes from non-specific sources, defined in 40 CFR Subpart D, Section 261.31
FOOF	dioxygen difluoride
HEPA	high-efficiency particulate air
HWN	hazardous waste number
ICP	Inductively coupled plasma
ID	item identification
IDC	item description code
K	RCRA hazardous waste number prefix for hazardous wastes from specific sources, defined in 40 CFR Subpart D, Section 261.32
LANL	Los Alamos National Laboratory
LLW	low-level waste
MCDOR	multicycle direct oxide reduction
MDL	Method detection limit
MEGAS	Multiple Energy Gamma Assay System
MT	material type
NDA	nondestructive assay
NMT	Nuclear Material Technology
P	Chemical symbol for Phosphorus, or RCRA hazardous waste number prefix for acute hazardous waste defined in 40 CFR Subpart D, Section 261.33
PCB	polychlorinated biphenyl
PF	Plutonium Facility
PPM	part per million
PPMV	part per million, on a volume basis
PRQL	program required quantitation limit
P/S	process/status [code]

l.c. [lower case]

PuBe	plutonium–beryllium
QA	quality assurance
QP	quality procedure
R&D	research and development
RD&D	research, development, and demonstration
RCRA	Resource Conservation and Recovery Act
RFETS	Rocky Flats Environmental Technology Site
RLWTF	Radioactive Liquid Waste Treatment Facility
RMDC	Records Management/Document Control
RSWD	radioactive solid waste disposal
RTR l.c.	Real-time Radiography
Sampling Plan	*Los Alamos National Laboratory Transuranic Waste Characterization Sampling Plan* (TWCP-PLAN-0.2.7-001,R.3)
SME	subject matter expert
SOP	safe operating procedure
TA	technical area
TBP	tributyl phosphate
TOPO	trioctylphosphine oxide
TRU	transuranic
TRUCON	TRUPACT-II Content Code
TRUPACT-II	Transuranic Waste Transporter-Model II
TWBIR	Transuranic Waste Baseline Inventory Report
TWCP	Transuranic Waste Characterization/Certification Project
U	Chemical symbol for Uranium, or RCRA hazardous waste number prefix for toxic waste defined in 40 CFR Subpart D, Section 261.33(f)
UCL_{90}	90% Upper Concentration Limit
UCNI	unclassified controlled nuclear information
VE	visual examination
VOC	volatile organic compound
WAC	Waste Acceptance Criteria
WIPP	Waste Isolation Pilot Plant
WIPP WAP	Attachment B, Waste Analysis Plan, to the *Hazardous Waste Facility Permit Issued to the Waste Isolation Pilot Plant* (EPA No. NM4890139088)
WODF	Waste Origination and Disposition Form
WPRF	Waste Profile Request form
XES	X-ray energy spectroscopy

(~~tetrahydrofuran~~)
/stet

- Drums containing waste from P/S codes AC, AC2, and SA are segregated from this waste stream until the potential applicability of HWN U213 has been resolved ~~(Acceptable Knowledge Summary Report for Miscellaneous Operations at TA-55 [TWCP-AK-2.1-004])~~.
- Drums containing waste generated from P/S codes SD and SS between 02/98 and 06/98 are segregated as a subset of TA-55-19 due to the potential presence of vanadium pentoxide (EPA HWN P120). (See separate AK summary for waste stream lot TA-55-19A).

Radionuclide Content

These waste streams predominantly contain a variety of plutonium material types with different well-defined isotopic compositions. Americium-241, neptunium-237, and uranium-234 may be present at detectable concentrations as decay products of their plutonium precursors. Some of the processes separate plutonium from americium and uranium. The waste will usually be enriched in americium-241 and uranium-234 relative to plutonium, but may also be depleted in some cases. Some waste may contain uranium from one of several uranium material types, as well as contaminants from uranium-235: its decay daughter, protactinium-231, and fission product cesium-137. Other waste may contain various radionuclides used as feed materials for producing radioassay sources, including americium-241, americium-243, cerium-144, curium-244, protactinium-231, neptunium-237, thorium-232, thorium-232 enriched in thorium-230, uranium-233, and depleted uranium.

Primary References for Documentation of Acceptable Knowledge

Process Acceptable Knowledge Summary Report for Chloride Operations at TA-55 (TWCP-AK-2.1-002)

Process Acceptable Knowledge Summary Report for Metal Operation Processes at TA-55 (TWCP-AK-2.1-003)

Process Acceptable Knowledge Summary Report for Miscellaneous Operations at TA-55 (TWCP-AK-2.1-004)

Process Acceptable Knowledge Summary Report for Nitrate Operations at TA-55 (TWCP-AK-2.1-005)

Process Acceptable Knowledge Summary Report for Pyrochemical Processes at TA-55 (TWCP-AK-2.1-006)

Process Acceptable Knowledge Summary Report for Special Processing at TA-55 (TWCP-AK-2.1-007)

- F001, F002, F003 and F005
- D004, D005, D006, D007, D008, D009, D010, D011, D018, D019, D021, D022, D035, D038, D039, D040
- P120 ~~(tetrahydrofuran)~~ stet
- Drums containing waste from P/S codes AC, AC2, and SA are segregated from this waste stream until the potential applicability of HWN U213 has been resolved.

lot

Radionuclide Content

These waste streams predominantly contain a variety of plutonium material types, with different well-defined isotopic compositions. Americium-241, neptunium-237, and uranium-234 may be present at detectable concentrations as decay products of their plutonium precursors. Some of the processes separate plutonium from americium and uranium. The waste will usually be enriched in americium-241 and uranium-234 relative to plutonium, but may also be depleted in some cases. Some waste may contain uranium from one of several uranium material types, as well as contaminants from uranium-235: its decay daughter, protactinium-231 and fission production cesium-137. Other waste may contain various radionuclides used as feed materials for producing radioassay sources, including americium-241, americium-243, cerium-144, curium-244, protactinium-231, neptunium-237, thorium-232, thorium-232 enriched in thorium-230, uranium-233, and depleted uranium.

Primary References for Documentation of Acceptable Knowledge

Process Acceptable Knowledge Summary Report for Chloride Operations at TA-55 (TWCP-AK-2.1-002)

Process Acceptable Knowledge Summary Report for Metal Operation Processes at TA-55 (TWCP-AK-2.1-003)

Process Acceptable Knowledge Summary Report for Miscellaneous Operations at TA-55 (TWCP-AK-2.1-004)

Process Acceptable Knowledge Summary Report for Nitrate Operations at TA-55 (TWCP-AK-2.1-005)

Process Acceptable Knowledge Summary Report for Pyrochemical Processes at TA-55 (TWCP-AK-2.1-006)

Process Acceptable Knowledge Summary Report for Special Processing at TA-55 (TWCP-AK-2.1-007)

feed materials for producing

contaminants of uranium-235: its decay daughter, protactinium-231 and fission product cesium-137. Other waste may contain various radionuclides used as radioassay sources, including americium-241, americium-243, cerium-144, curium-244, protactinium-231, neptunium-237, thorium-232, thorium-232 enriched in thorium-230, uranium-233, and depleted uranium.

Primary References for Documentation of Acceptable Knowledge

Process Acceptable Knowledge Summary Report for Chloride Operations at TA-55 (TWCP-AK-2.1-002)

Process Acceptable Knowledge Summary Report for Metal Operation Processes at TA-55 (TWCP-AK-2.1-003)

Process Acceptable Knowledge Summary Report for Miscellaneous Operations at TA-55 (TWCP-AK-2.1-004)

Process Acceptable Knowledge Summary Report for Nitrate Operations at TA-55 (TWCP-AK-2.1-005)

Process Acceptable Knowledge Summary Report for Pyrochemical Processes at TA-55 (TWCP-AK-2.1-006)

Process Acceptable Knowledge Summary Report for Special Processing at TA-55 (TWCP-AK-2.1-007)

This AK summary report summarizes AK information specific to the combustible debris waste streams TA-55-19 (including waste stream lot TA-55-19A) and TA-55-20.

3.0 DESCRIPTION OF THE WASTE STREAM

3.1 Facility and Mission

TA-55 has extensive capabilities for the extraction and recovery of plutonium from residues and scraps generated from operations at various LANL facilities and other DOE sites in the defense complex. The recovered plutonium is converted into pure plutonium feedstock. These manufacturing and recovery operations, associated maintenance operations, and TA-55 plutonium research are the sources of TRU-contaminated scrap, residues, and debris generated at TA-55. The scrap and residues are processed to recover as much plutonium as practicable before disposal. Wastes are generated from plutonium recovery and purification for defense and non-defense programs; these wastes are generated and produced in the same rooms and gloveboxes and were not segregated based on funding source until August 27, 1998.

The combustible waste streams TA-55-19 and TA-55-20 were generated at the TA-55 Plutonium Facility (Building PF-4) as debris waste from process operations and glovebox maintenance involved in plutonium recovery. For this reason, the waste streams are defense related. However, waste also was produced from "special process" and research related activities. These wastes were not segregated, but were commingled in the final waste containers to such an extent that segregation is not possible on the basis of waste generating process or glovebox location (TWCP-887). The waste was also co-mingled with room trash related to these same operations (both defense and non-defense), which was initially boxed as low-level waste but was returned for discard in drums as TRU waste when on-site radioassay results showed it exceeded the low-level discard limits (DLs) (TWCP-816).

A LANL site map and a detailed map of the buildings at TA-55, including Building PF-4, are shown in Attachment 2.

3.2 Basis, Rationale, and Assumptions Used to Delineate the Waste Streams

The basis for delineation of TA-55 waste streams was established by the evolving set of LANL and TA-55 waste management plans and site-specific procedures, which date back to the start of operations at the Plutonium Facility in 1978 (TWCP-352, TWCP-697, TWCP-700, TWCP-701, TWCP-3943). The stated guidance and practice from the beginning, continuing to the present day, has been to handle and package all combustible and noncombustible debris waste in a similar fashion, regardless of the process of origin. Relevant details of these planning and implementation documents are summarized in this section, in order

to provide background information to support the process used by TWCP to assign TA-55 waste containers to specific waste streams. Waste stream assignment is made on the basis of waste generator information compiled in the TWCP waste container data base, which comprises the bulk of the Sampling Plan. Waste generator information is reviewed to identify the types and sources of waste items present in each drum, in order to evaluate the most appropriate waste summary group, waste matrix code, and potential for the presence of hazardous constituents.

3.2.1 Waste Packaging at TA-55

Inspection, collection, documentation and packaging operations of solid, certifiable TRU wastes at TA-55 are conducted in PF-4 by a waste management section or team (TWCP-352, TWCP-700, TWCP-701, TWCP-3943). Wastes from all TRU waste-generating activities at TA-55 are handled and packaged by this team. Materials are considered waste only when they have been received and processed by the waste management team. Waste segregation schemes used by this team have evolved since operations began at the Plutonium Facility in 1978.

In 1978, the standard operating procedure for waste management at TA-55 stated the guiding philosophy of minimizing the amount of waste generated, and minimizing the plutonium content of that waste (TWCP-3943). Discard Limits (DL) for plutonium in various types of waste matrices were established by the waste-generating group, and approved by the LANL division office and the DOE Albuquerque Operations Office. Personnel were requested to sort potentially recyclable TRU waste items (i.e., those containing potentially recoverable amounts of plutonium) into classes, such as rubber, plastics, rags, non-Pu metals, glass, oils, cans, sweepings, etc. These materials were then assayed. Based upon its plutonium level relative to the DL, material was either sent to recovery operations or to "20-year" retrievable storage. All liquids, including oils, were required to be sent to recovery operations for processing. Liquids were explicitly prohibited from any container of solid waste materials.

In 1984, a lab-wide TRU Waste Certification Plan was adopted for newly generated TRU waste (TWCP-697). Each LANL waste generator was required to develop an attachment to this plan to define the details of the waste certification functions and controls that applied to their specific processes and waste streams. TA-55 prepared an attachment in March 1987 for contact-handled combustible and noncombustible solid waste (TWCP-701), defined as follows:

- Combustible waste forms included materials which could be reduced to an ash if desired but which did not require further processing to

meet the WIPP Waste Acceptance Criteria (WAC) (TWCP-701). ~~(This definition is still current.)~~ Subcategories included plastic-base, cellulose-base and miscellaneous (graphite and graphite crucibles). It was acceptable for the combustible waste stream to include some unspecified "small" fraction of noncombustible solids such as scrap metals.

- Noncombustible waste forms included materials that could not be reduced to ash but that did meet the WIPP ~~Waste Acceptance Criteria~~ (WAC) without further processing (TWCP-701). The two subcategories were metals and non-metals. The non-metal wastes included glass, fiberglass heating mantles, porcelain crucibles, ceramic furnace tube inserts, and leaded glovebox gloves. It was acceptable for the noncombustible waste stream to include some unspecified "small" fraction of combustible solids, and that could be contained in plastics. For WIPP purposes, any waste forms that were chemically compatible and that met the WAC, could be combined into a single waste container.

In 1995, a new TRU Waste Certification Plan was adopted, including a new attachment that formalizes how the TA-55 waste management team currently segregates newly generated wastes into waste streams (TWCP-700). Waste materials are segregated [~~by~~]:

- by radioisotope, in order to meet nondestructive assay (NDA) and gas generation requirements
- by material matrix, in order to meet NDA and TRUCON requirements
- by hazardous constituents, in order to meet RCRA and Department of Transportation (DOT) requirements

Combustible waste forms include plastic base and cellulose base (TRUCON code 116), but graphitic waste ~~is now in~~ was moved to the noncombustible category. Noncombustible debris waste forms are broken down to a finer level of classification than had previously been used:

- metals (TRUCON code 117)
- glass (TRUCON code 118)
- HEPA filters (TRUCON code 119)
- leaded gloves (TRUCON code 123)
- salts (TRUCON code 124)
- graphite (TRUCON code 115)

In addition, each major waste form includes provisions for small quantities of unspecified waste with similar properties. This provision is necessary in order to allow for infrequently encountered waste items.

3.2.2 Waste Stream Delineation for TA-55

From ~~Starting with~~ the beginning of operations at TA-55,
The physical description of each waste item generated was documented on a Waste Origination and Disposition Form (WODF) by the waste generator ~~according to controlled~~ procedures. The P/S code for ~~[many]~~ waste items was sometimes ~~are~~ ~~also documented~~ on this form. ~~although recording of P/S codes was spotty before about 1990.~~

Starting in 1987, the TA-55 Plutonium Facility began its current system of tracking waste items both by the process from which they originated as well as by their material content. Waste items are labeled with an item identification (ID) code that contains information on the waste material parameter of the item and an embedded P/S code that corresponds to the process that produced the waste item. In the packaging process, a standard form, the Discardable Waste Log Sheet (DWLS), was used to list each ID code and record its matrix material. This form was signed by the waste packager and approved by quality assurance personnel. Both the WODF~~s~~ and DWLS for each TRU waste drum have been maintained as hard copy records by the generator. For waste stream TA-55-19, example copies of these container records (for combustible debris) are included in Attachment 4. Note that this waste container (LA00000056636) contains waste items generated by three different P/S codes (CXL, ED, and SC), each with its own completed WODF.

(although recording of P/S codes was inconsistent until about 1990).

Waste items are packaged into waste containers based on the material content of the waste, without regard to P/S code. This practice complicates AK tracking because a single waste container can include waste items from several P/S codes. In the Sampling Plan, TA-55 wastes have been assigned to waste streams based on the waste segregation schemes used by TA-55:

- First by radioisotope content (Pu238 or Pu239 material type)
- Then by material matrix (combustible, noncombustible, metal, glass, etc. waste types)
- Then by hazardous waste status (mixed, non-mixed, or special case waste streams)

Waste stream delineation was performed using waste generator information (such as the WODF and DWLS) that has been compiled in an electronic data base that is part of the Sampling Plan. Because waste

items from several different P/S codes were combined into each waste drum, a special sort on the P/S code of each waste item in a drum was necessary to determine if the drum contained all non-mixed items, some or all mixed-waste items, or a special case item (such as an item from P/S code SS carrying the EPA Hazardous Waste Number (HWN) P120). If the P/S code information was missing for any item in a waste drum (as was the case for many older wastes), that drum was conservatively assigned to the mixed-waste stream. Fortunately, the special case wastes carrying the HWN P120 were generated relatively recently, such that the data base records for those items are usually complete.

3.2.3 Waste Container Labeling

The net effect of the waste packaging system used at TA-55 is that several HWNs are conservatively assigned to individual waste streams for the purposes of WIPP disposal, because the WIPP WAP requires HWN assignment on a waste stream rather than a waste container basis. For the purposes of generator and on-site storage, however, LANL labels waste on a container by container basis. Thus, the hazardous labels on containers in storage at LANL should not be expected to correspond to the HWNs assigned to the waste stream through this AK summary report. Hazardous labels are updated to meet WIPP disposal requirements just before loading waste containers into the Transuranic Package Transporter-Model II (TRUPACT-II) for shipping to WIPP.

3.3 Waste Physical Form and Content Description

The TA-55-19, -19A, and-20 waste streams are defined as combustible debris waste streams (Sampling Plan, Appendix D), with TA-55-19 being a mixed-waste stream and TA-55-20 its non-mixed counterpart. TA-55-19A is a small substream lot, distinguished from TA-55-19 by the addition of HWN P120. Both of these waste streams include paper, rags, plastic, rubber, and plastic-based and cellulose-based waste generated at the facility. Plastic-based waste includes, but may not be limited to, polyethylene and vinyl tape, gloves, plastic vials, polystyrene, Tygon tubing, polyvinyl chloride plastic, Teflon products, Plexiglas, and dry box gloves (unleaded neoprene base). Cellulose-based waste includes, but may not be limited to, rags, wood, paper, and cardboard; laboratory coats and overalls; booties and cotton gloves, and similar materials. The waste may also contain a small fraction (generally less than 5 percent) of non-combustible solids (scrap metal, metal lids, and clothing zippers) (Sampling Plan, Appendix D).

Leaded gloves are also generated as process waste in TA-55 operations. Prior to 1987, leaded gloves were discarded in the combustible and non-combustible debris waste streams, including TA-55-19. Between 1987 and May 1992, leaded gloves began to be segregated from combustible debris and discarded in the metal debris waste stream because of concern that explosive lead oxides might form if

the combustible debris waste were ever incinerated. Since May 1992, leaded gloves have been routinely segregated from other metal debris waste and assigned to a separate leaded-glove waste stream.

3.4 Waste Volume and Time Period of Waste Generation

The following information is from Appendix D of the Sampling Plan (R.3). These inventories ~~values~~ are expected to change because the Sampling Plan is continually updated as new waste information is obtained.

- TA-55-19 includes 4173 containers (873 cubic meters), that were generated from 1978 to the present time.
- Waste stream lot TA-55-19A is not yet fully defined in the sense that a list of specific waste containers in this lot has not yet been prepared. This is because P/S codes are not always explicitly identified for waste items in TA-55 waste containers. However, it may be possible to extract this information from the waste item identifiers, at which time waste containers can be assigned to TA-55-19A.
- TA-55-20 includes 281 containers (59 cubic meters), that were generated from 1979 to the present time.

3.5 Waste Stream Generation Processes

3.5.1 Overview

The TA-55-19, -19A, and -20 combustible debris waste streams were generated from combustible materials used in processes to recover plutonium from residues, metal fabrication, and research and development activities. The variety of plutonium handling operations includes:

- Preparing ultra-pure plutonium metals, alloys, and compounds
- Preparing on a large scale specific alloys, including casting and machining these materials into specific shapes
- Determining high-temperature thermodynamic properties of plutonium
- Reclaiming plutonium from scrap and residues produced by numerous feed sources
- Disassembling components for inspection and analysis

- Manufacturing of parts on a limited basis

- Processing mixtures of plutonium and uranium oxides for reactor fuels.

The manufacturing and research operations performed at TA-55 in the recovery of plutonium results in the production of plutonium-contaminated scrap and residues. These residues are processed to recover as much plutonium as is practical (TWCP-352). TA-55 has extensive capabilities for the extraction and recovery of plutonium from residues and scrap generated from operations at various LANL, other U.S. Department of Energy (DOE) facilities, and commercial radioactive sources. These recovery operations, along with associated maintenance operations, and TA-55 plutonium research are the sources of TRU waste generated at TA-55.

Plutonium processing ~~facilities~~ operations generate contaminated combustible waste from:

- Plastic materials that result in combustible waste such as Tygon tubing, polyvinyl chloride vials, plastic bags, etc.

- Cellulose-based cleaning aids and personal protective equipment such as rags, paper wipes, laboratory coats, coveralls, booties, etc.

- Rubber- and Teflon-based products used in operations, such as rubber gloves, Teflon tape, gaskets, stoppers, etc.

3.5.2 Process Flow Diagrams

Detailed information about the TA-55 plutonium recovery processes can be found in the Process AK reports. For purposes of the AK search, and to allow convenient referral to and referencing of the Process AK reports in this waste stream AK Summary Report, the processes have been arbitrarily divided into six major areas:

- Chloride Operations (TWCP-AK-2.1-002)
- Nitrate Operations (TWCP-AK-2.1-005)
- Miscellaneous Operations (TWCP-AK-2.1-004)
- Special Processing (TWCP-AK-2.1-007)
- Metal Operation Processes (TWCP-AK-2.1-003)
- Pyrochemical Processes (TWCP-AK-2.1-006)

Generalized flow diagrams for the six operational areas ~~relevant to this AK search~~ are presented as Attachment 3 and indicate P/S codes for the

various processes. The full block flow diagram for plutonium processing and waste management at TA-55 is given in reference TWCP-886.

The following subsections describe the processes that generated debris waste assigned to the TA-55-19, -19A, and -20 waste streams. The potential for RCRA-regulated constituents to be present due to feed materials ~~of~~ and chemical use in these processes is summarized in Sections 3.6.1 and 3.6.3. The applicability of EPA HWNs as a result of this potential is specified in Section 8.

3.5.3 Chloride Operations

P/S codes CL, CLRD, CLS, CS, CSE, CW, CX, CXL, LD, MB, MS, PB, PRR, PUB, and SE

A detailed description of chloride operations can be found in *Process Acceptable Knowledge Summary Report for Chloride Operations at TA-55* (TWCP-AK-2.1-002).

The overall goal of the chloride operations is to recover plutonium from scrap and residues and produce a purified plutonium oxide for conversion to metal. The primary feed sources are plutonium residues from pyrochemical operations, plutonium-beryllium (PuBe) neutron sources, analytical laboratory solutions, and residues from other DOE facilities. Chloride operations can be broken down into the following process steps:

- pretreatment
- dissolution
- purification
- hydroxide precipitation

Pretreatment may include sorting, crushing, and/or pulverizing feed materials prior to being fed into later steps of chloride operations. A separate pretreatment procedure is the decladding of plutonium-beryllium sources. The PuBe metal alloy is removed from the sources, which are then entered into the chloride line for plutonium recovery along with other materials.

In the dissolution step, hydrochloric acid is used to leach and dissolve plutonium from scrap, crucibles, residues, and various solutions, including solutions from the analytical chemistry laboratory. Enriched solutions undergo further purification (see next paragraph), and solid wastes are discarded as debris waste or sent to cement fixation in nitrate operations (section 3.5-4).

Purification steps may include solvent extraction, ion exchange, and oxalate precipitation, depending on the chemical nature of the material to be purified. Ion exchange columns are used to collect plutonium and separate out impurities. Enriched solutions may be further treated with oxalic acid to precipitate plutonium oxalate, which is converted to plutonium oxide.

In the hydroxide precipitation step, plutonium in solutions from purification steps is precipitated with potassium, magnesium, or sodium hydroxide. Heavy metals are concentrated in the plutonium-rich hydroxide cakes and derive from one or more of the following: (a) feed materials that consist of or contain the metals; (b) leaching of metal from equipment components; or (c) from the use of silver salt (until 1994) as an indicator of chloride content. The resulting enriched hydroxide cakes become feed material for nitrate operations, and liquid meeting the TA-50 WAC is sent to the RLWTF using the caustic waste line. Some hydroxide cakes are returned to the dissolution step for re-processing.

3.5.4 Nitrate Operations

P/S codes AL, AO, AP, AS, AT, ATL, BAC, BF, BL, BM, BU, CC, CD, CF, CH, COD, COL, CPOD, CR, DF, DP, DS, ED, ETD, EV, FA, FC, FX, GMS, HC, HCD, HD, HGMS, HP, HRA, IA, IS, LC, LG1, LG2, LR, MAG, MAS, MB, MELL, MF, ML, MPD, NC, NL, NR, OD, OH, OY, PA, PAF, PR, PS, PT, PTS, RB, RBJ, RC, RCM, RFX, RO, RR, SC, SP, SSD, SX, TDC, UPS, US, US2, VC, VP1, VP2, VP3, VUL, ZD

A detailed description of nitrate operations can be found in *Process Acceptable Knowledge Summary Report for Nitrate Operations at TA-55* (TWCP-AK-2.1-005).

The overall goal of the nitrate operations is to recover plutonium from scrap and residues, and produce a purified plutonium oxide for conversion into metal. The primary feed sources for the nitrate operations are plutonium residues from other recovery operations (e.g., chloride operations), metal preparation, metal fabrication, analytical laboratory operations, and residues from other DOE facilities. Nitrate operations can be broken down into the following process steps:

- pretreatment
- dissolution
- purification
- evaporation
- cement fixation

compounds, their characterization and reaction chemistry, and application to existing actinide processing technology. Other operations comprised a broad range of laboratory activities in support of fundamental and applied actinide chemistry research, including preparation of solvents and reagents, synthesis of new chemical compounds, and characterization and analysis of new chemical compounds using wet chemistry methods and analytical instrumentation.

Analytical Operations. This category covers all analytical techniques performed in Room 124 of the Plutonium Facility. Processes involve analysis of plutonium and americium, RCRA metals, and trace metals. Originators provide samples, which are prepared for further analyses, such as inductively-coupled plasma (ICP) and X-ray energy spectroscopy (XES). Unused liquid samples are returned to the originator, sent to radiochemistry for counting, or sent to recovery operations.

R&D Efforts. Several small-scale R&D efforts primarily focused on plutonium recovery included the following activities:

- Fluoride sintering of PuO_2 took advantage of the presence of fluoride to aid the formation of a sintered mass of PuO_2 powder at temperatures above 700 °C.
- Chlorination of Pu oxides involved oxides with tantalum chips from Rocky Flats Environmental Technology Site (RFETS). Chlorination was used to recover plutonium from potassium chloride and sodium chloride matrices.
- Processing of molten-salt extraction (MSE) salts generated at LANL and RFETS.
- Recovery of plutonium from ash involving plutonium/thorium oxide mixtures.
- Processing of neptunium oxide and metal was performed to remove the protactinium daughter in order to use the neptunium for NDA standards.

First check Misc. Op. Process AK report to see if VS is still active

Measurement/Detection Operations and Studies. P/S code VS involves the inspection of oxides and metals. Materials ~~were~~ are retrieved from the vault, brought to the glovebox, inspected and sampled if necessary, then repackaged and returned to the vault. Assay methods include XES, laser based spectroscopy, and other spectroscopic techniques.

All one ¶, no bullet

Electron microscopy may be conducted on actinide samples in the future. In addition to elemental and isotopic analyses, other

3.5.7 Metal Operation Processes

P/S codes AO, ARI, BA, BC, BT, CA, CN, CO, CT, DA, DOP, DT, EL, ELW, EM, EVAC, FF, FSPF, GI, HG, ID, IN, ITF, ITF4, ITF7, JA, KBTF, MA, MBC, MOX, MW, OB, OM, PCH, PD, PE, PF, PH, PIG, RAP, RAP2, RL, RS, SRL, TIGR, UA, VD, WE, WLT

A detailed description of metal operation processes is found in *Process Acceptable Knowledge Summary Report for Metal Operation Processes at TA-55* (TWCP-AK-2.1-003).

The processes included in metal operations can be divided into three groups

- on-going metal operation processes
- developmental metal operations
- reactor fuel development processes

The main goal of metal processes is to take the high purity metal produced by pyrochemical operations and produce shaped metal pieces. On-going metal operation processes include various R&D activities, alloy development, casting of metals, welding, coating, and machining/metalwork on various metals. Developmental metal operations include the Advanced Recovery and Integrated Extraction System (ARIES) project, assembly operations, burst testing of shells, experimental laser welding, furnace operations, and various other experimental activities. In reactor fuel development, enriched uranium oxide, depleted uranium oxide, and/or plutonium oxide feeds are blended and mixed with graphite, and various operations are performed to convert the feed material into pellets that can be used for fuel. Testing and R&D are done on the fuel pellets.

3.5.8 Pyrochemical Processes

P/S codes CRD, ER, MO, MP, Neptunium, OR, PK, PTP, RA, SCB, SD, SS, and SSMD

A detailed description of pyrochemical processes is found in *Process Acceptable Knowledge Summary Report for Pyrochemical Processes at TA-55* (TWCP-AK-2.1-006).

Pyrochemical processes include metal preparation, metal purification, and ancillary metal production operations. Pyrochemical process outputs are most often high-purity metal~~s~~ feed materials for metal operations.

3.5.8.1 Metal preparation processes include the following ~~operations~~:

Metal Preparation Line. The metal preparation line produces plutonium metal from fluoride salts. Hydrogen fluoride gas reacts with plutonium oxides obtained from calcination of oxalate or peroxide precipitates from the aqueous nitrate or chloride process lines. The plutonium compound is further reacted with various chemicals to produce plutonium metal, which can then be recovered as a button by breaking the crucible.

Direct Oxide Reduction (DOR). In the single pass DOR process, plutonium oxide and calcium metal are reacted in molten calcium chloride ($CaCl_2$) or $CaCl_2$ mixed with calcium fluoride (CaF_2), to produce plutonium metal. The reaction is conducted in a magnesium oxide (MgO) crucible. After cooling, a plutonium metal button is removed by breaking the crucible. A layer of salt above the button contains unreacted oxide and metal shot, which was sometimes recovered by addition of fresh salt plus additional calcium metal.

Multiple-Cycle Direct Oxide Reduction (MCDOR). To minimize the salt waste, the MCDOR process was started, in which the molten salt is regenerated by sparging the $CaCl_2$-CaO mixture with chlorine gas between multiple plutonium metal production runs. After approximately five cycles of metal production, the mixture is cooled and the salt and metal phases are separated.

3.5.8.2 Metal purification processes include the following:

Molten Salt Extraction (MSE). MSE is used to separate americium and the more reactive elements such as rare earth elements, alkali metals, and alkaline earth metals from plutonium metal (TWCP-352). This process is employed only if the americium content is greater than 1000 ppm. In the original process, which operated from 1979 to 1988, magnesium chloride ($MgCl_2$) was added to the impure plutonium metal in a molten salt of sodium chloride (NaCl) and potassium chloride (KCl), contained in a MgO crucible and heated to 750°C. The magnesium chloride oxidized americium to $AmCl_3$, although some plutonium was also converted to the chloride salt form. In 1988, the MSE process was converted to use plutonium chloride ($PuCl_3$) produced by in-situ chlorination in a tantalum crucible. In the LANL

sodium or potassium left in the salts are converted to nonpyrophoric oxide forms.

Vanadium pentoxide (V_2O_5) was used in place of carbonate to convert metals to oxide as part of the salt stripping process for a few months in 1998. Wastes that potentially contain this chemical (HWN P120) will be segregrated into waste stream lot TA-55-19A (see Section 4.0).

Salt Distillation. Salt distillation allows the recovery of plutonium oxide from the chloride salt and produces purified chloride salt for reuse.

Pyroredox. The pyroredox operation was used to recover plutonium from spent anode heels in the mid- to late 1980s. The anode heel was polished with calcium metal to remove surface oxide, then oxidized to plutonium (III) with zinc chloride ($ZnCl_2$) in molten KCl, forming plutonium chloride ($PuCl_3$). Elements more electroactive than zinc (including barium) were oxidized into the salt phase, and the zinc formed a metal button. The salt was then mixed with calcium metal in $CaCl_2$ to reduce the plutonium to the metal phase, as well as reducing all elements less electroactive than calcium. The salt phase containing small amounts of the impurity barium was mechanically separated from the metal phase and discarded. The metal phase containing zinc was placed in the vault or further treated, and the plutonium eventually was routed back to ER.

Ingot Casting. Metal is melted in a MgO crucible to cast the ingot.

Metal Coalescence. Metal coalescence is used for plutonium turnings to coalesce the turnings into a metal button. Calcium metal and $CaCl_2$ are added to a MgO crucible along with the turnings and melted.

Metal Oxidation. Small pieces of metal remaining on furnace or crucible surfaces are collected for conversion to the oxide phase. These metal pieces are placed in a furnace for the conversion process. The oxide is then transferred to the vault.

Neptunium. A campaign to work off neptunium residues stored in the vault was undertaken in 1993 and was only active that year.

Pickling. Pickling (i.e., leaching metal with a strong acid) is typically a head-end operation. After a few furnace runs, plutonium metal begins to accumulate on tools and furnace parts. It then becomes necessary to leach the plutonium from these items. In addition, after calcium metal reduction processes such as metal preparation, direct oxide reduction, and molten salt extraction, plutonium metal will have an adherent skin of calcium metal. Hydrochloric acid is used to dissolve Pu from tantalum furnace parts, and nitric acid is used to pickle Pu from other metals.

Plutonium Trichloride Preparation. An intermediate process in Pu metal production prepared plutonium trichloride by bubbling a carrier gas (chlorine) through carbon tetrachloride and passing the mixed gas stream through a bed of plutonium oxide at 500 °C–600 °C before being absorbed in a 5–6 molar potassium hydroxide solution. The carbon tetrachloride was broken down into phosgene, carbon monoxide, and carbon dioxide gases in this process, which was active between January 1987 and June 1989, at which time the process switched to the use of phosgene gas until the process ended in May 1991. Feed material was high purity oxides from the vault or from other P/S codes. The product plutonium trichloride was reduced to metal by the MSE or ER processes.

3.6 Material Inputs to the Waste Generation Processes

Material inputs to the ~~waste~~ generation processes derive from ~~three~~ four general sources: (a) feed material, (b) associated nuclear material types, (c) chemical use, and (d) ancillary material inputs such as those related to the use of laboratory equipment and materials and glovebox maintenance activities.

3.6.1 Feed Material Inputs

The feed materials for TA-55 processes that generate waste in waste streams TA-55-19 and TA-55-20 consist of the general types of materials listed in Table 1. ~~that~~ These feed materials are obtained either from the storage vault, as process output from various P/S codes, or from sources outside TA-55, including other DOE facilities.

These feed materials fall into four general categories:

- pure Pu metal to be recycled from pits and sealed sources or to be reworked into desired shapes or chemical forms
- intermediate Pu products in purification processes, ~~such as~~ in the form of solutions, oxides, hydroxides, salts, ~~or~~ anode heels, etc.

- a wide variety of matrices contaminated with Pu above the DL, such as ash, salts, equipment, and solutions
- experimental R&D feed materials

Table 1. Feed Materials for Processes Contributing to Waste Streams TA-55-19 and TA-55-20

LANL Group

Feed Material	Potential Presence of RCRA-Regulated Substances	P/S Codes, Listed by Process
Analytical laboratory solutions	Potentially contaminated with RCRA-regulated constituents • All analytical laboratory solutions are potentially contaminated with chromium (D007), lead (D008), and mercury (D009) • CLS-1 solutions potentially contaminated with mercury (D009) and lead (D008), as well as RCRA-listed organic substances used as solvents, including acetone (F003), butyl alcohol (F003), carbon tetrachloride (D019), chlorobenzene (F002, D021), chloroform (D022), methanol (F003), methylene chloride (F002), tetrachloroethylene (F002, D039), xylene (F003) (Cl-25/TWCP-3547).	Chloride operations: CLS, CW, CXL (analytical laboratory solutions from CLS-1); CSE, SE (other solutions) Miscellaneous operations: ACL, ICP Nitrate operations: CF, HP
Anode heels	Typically contaminated with RCRA-regulated heavy metals cadmium (D006), chromium (D007), lead (D008), and silver (D011). Heavy metals arsenic (D004), mercury (D009), and selenium (D010) are not present because they are volatilized from the Pu oxide feed at the high temperatures to which this material is subjected in P/S codes ER, RM, and SS (electrorefining step).	Nitrate operations: AS, BF, BU Pyrochemical processes: RA
Ash from P/S codes ETD, IS, SB, TDC, or from other DOE facilities	Usually suspect contaminated with barium Ba (D005), cadmium (D006), chromium (D007), lead (D008), and silver (D011). Arsenic (D004), mercury (D009), and selenium (D010) metals are volatilized at high temperatures if present in the oxide and chloride forms.	Miscellaneous operations: CK, CV, FDL, FLU, SO, XP Nitrate operations: AL, AT, ATL, ED, HGMS, IS, MPD, PTS, RC, SC Special processing: ACD, IAM, SB, SL
Crucible pieces (tantalum, magnesium oxide)	Typically fairly pure, no RCRA substances present	Chloride operations: CL Nitrate operations: MAS, SC Special processing: ACD, SL
Disassembled weapons components (pit diassembly)	High-purity Pu and U material types, no RCRA substances present	Metal operation processes: ARI, CA, PH, SRL Miscellaneous operations: EDC Nitrate operations: BM, RB, RBJ

Feed Material	Potential Presence of RCRA-Regulated Substances	P/S Codes, Listed by Process
Experimental R&D feed materials; various isotopes and isotopic mixtures of actinides in various matrices	Variable purity	Miscellaneous operations: AD, CV, EXT, HRS, RASS, SA, XES, XP Nitrate operations: MAS
Hydroxide cakes (process output from P/S codes CLS, CW, CXL, DO, POSM, PRR)	Typically contaminated with RCRA-regulated heavy metals cadmium (D006), lead (D008), mercury (D009), ~~and~~ silver (D011), and possibly chromium (D007)	Miscellaneous operations: AD Nitrate operations: CD, HCD, HD, LG2 Special processing: DO, POSM
Miscellaneous materials contaminated with Pu (e.g. sand, slag, tools, crucibles, metal, glass, plastic, labware, scrap, rags, glovebox sweepings, pump oils, HEPA filters)	May be contaminated with RCRA-regulated heavy metals silver (D011), cadmium (D006), mercury (D009), lead (D008), and possibly chromium (D007) Insert space after comma	Miscellaneous operations: APD Nitrate operations: ATL, BAC, CPOD, CR, ED, ETD, GMS, HGMS, IS (combustible material), LG1 (non-combustible material), MAG, MAS, MELL (cellulosic material), ML (metal equipment), NC (non-combustible material), NL (non-combustible material), PA (glovebox sweepings), PAF, RO (organics), SC, SP, TDC (cellulosic material), VC, ZD Pyrochemical processes: PK (hardware, metal, anode chips from other P/S codes) Special processing: ACD, DO, SB, SL
MSE salts	Typically fairly pure, suspect contaminated with barium (D005) but no other RCRA substances present	Chloride operations: MB, MS Miscellaneous operations: XP Nitrate operations: MB, PS
Neptunium residues from vault	No RCRA-regulated substances	Pyrochemical processes: Neptunium (only active in 1993)
Pu chlorides and fluorides	Variable purity	Miscellaneous operations: FDL, SO Pyrochemical processes: ER, SD, SS Special processing: RM

Feed Material	Potential Presence of RCRA-Regulated Substances	P/S Codes, Listed by Process
Pu metal or metal alloy from vault or from various P/S codes	High purity, no RCRA-regulated substances, unless noted otherwise	Metal operation processes: AO, ARI, BC, BT, CA, DA, ELW, EVAC, FSPF, ITF, ITF4, JA, KBTF, MA, MBC, MW, PCH (variable purity), PD, PE, PF, PH, RL, SRL, VD, WE, WLT Miscellaneous operations: AC, AC1, AC2, EXT, LIBS, ME, SA, SMP, VS Nitrate operations: ATL, BM, BU, MF, PAF, VP1 Pyrochemical processes: CRD (variable purity), MO, SCB, SS, SSMD Special processing: ACC (variable purity), PI (variable purity), PPD, POSM, RM, SB
Pu oxalates	Typically fairly pure, no RCRA substances present	Nitrate operations: CC, DF, HC
Pu oxides	Variable purity from P/S codes RB, RBJ and others, and from the vault; suspect contaminated with RCRA-regulated heavy metals cadmium (D006) chromium(D007), and lead (D008) space High purity oxides from P/S codes CA, DO, and MA, and from the vault	Metal operation processes: DOP (high-purity Pu and other radionuclides as oxides) Miscellaneous operations: CK, CV, EOC, EXT, FDL, FLU, IB, IE, LI, LIBS, SO, STF, VS, XP Nitrate operations: ATL, BL, CH, CPOD, DP, ED, FC, LC, MPD, OD, PT, RB, RBJ, SP, SSD, UPS, US, US2 Pyrochemical processes: MP (generally high purity), OR (variable purity), PTP Special processing: DO, PI, PX, POSM, RM
Pu-Be sources	High purity constituents, no RCRA-regulated substances	Chloride operations: PB, PUB
Pyrochemical salts	Typically fairly pure, no RCRA substances other than barium (D005) are present	Chloride operations: MB, MS, PRR Miscellaneous operations: EXT, IB Nitrate operations: COD, COL, MB Special processing: DO
Reactor fuel pellets	High purity Pu and U material types, no RCRA-regulated substances	Metal operation processes: ME
Stainless steel and/or tantalum residues from decladding of Pu-Be sources	High purity metals, potential leaching of chromium (D007) from stainless steel if subjected to strong acid	Chloride operations: PUB

3.6.2 Radionuclide Content Identification

Stopping point on 3/10/01

Continue editing from here

The primary Pu material type inputs for TA-55 processes at TA-55 are listed in Table 2. The designation *material type* (e.g., MT 52) is used within the DOE Complex to describe the isotopic composition of common blends of radioactive materials used within the Complex. The material type notation was developed because it is a convenient way to describe material types that have very consistent isotopic compositions. Table 2 indicates the isotopic composition of the material types at the time the waste was characterized.

The material type provides the basis for estimating an upper bound for U-234, U-235, and Am-241 contents based on the rate of decay of their precursors, Pu-238, Pu-239 and Pu-241, respectively. The purpose of these bounding calculations is to provide a basis for identifying significant enrichment or depletion of radionuclide versus another, based on radioassays of individual waste containers. The results of these calculations are also tabulated in Table 2, assuming (a) none of these isotopes were initially present in the material, (b) the oldest Pu material in inventory dates back to 1 January 1960, and (c) the waste was packaged on 1 January 1996, making it 36 years old (TWCP-698).

TA-55 processes are not expected to alter the Pu isotopic ratios of the feed material. The material type used in the process generating each waste item was documented on the WODF and DWLS (examples shown in Attachment 4). However, other radionuclides will be present in most of the process wastes from decay of a Pu precursor or as a contaminant in the feed material:

- Np-237, the decay product of Am-241 (half-life, 458 yr), is expected to be present mostly in minor amounts in most debris waste from processes at TA-55.

- In general, uranium and its isotopes are expected to be present only at trace levels, if at all, if the feed material did not purposely contain uranium.

- U-235 ingrowth from the decay of Pu-239 (half-life, 24,120 years) would be negligible due to the long half-life of Pu-239.

- U-234 would be present in MT 83 (and to a lesser extent in other Pu material types) as a decay product of Pu-238 (half-life, 87.74 years) (Table 2).

Louise,
I emailed you the text that ~~is replaces~~ ~~this ¶~~ adds 2 bullets and that replaces this ¶
gtm

In addition, secondary radionuclides will be present in the waste due to processing of feed materials other than Pu (TWCP-698). Additional radionuclides expected to be present in each process were reviewed by a panel of experts at TA-55 and compiled in a memo according to P/S code (TWCP-882), as summarized in Table 3.

During TWCP characterization, the contents of each waste package undergo non-destructive analysis to provide detailed radioisotopic data. These data will be used to evaluate the accuracy of AK information in accordance with *Waste Characterization Data Reconciliation with Acceptable Knowledge* (TWCP-DTP-1.2-064). The results of these assay results are summarized in Section 14.

3.6~~2~~ 3 Chemical Content Identification

Chemical contents of process inputs and outputs were compiled from chemical lists contained in procedures reviewed during the process AK search and from SME input. Individual process AK reports contain detailed assessments of these chemical inputs, and of the applicability of EPA HWNs. In this section, discussion of chemical inputs are divided into the following categories:

- Acids and bases
- Gases and cryogenic fluids
- Metals
- Inorganic chemicals
- Organic chemicals

5.0 CORRELATIONS BETWEEN WASTE STREAMS

Waste Streams TA-55-19 and TA-55-20 have been discussed together in this AK Summary Report. These waste streams are similar in physical form and waste material content. They differ only in that TA-55-19 is assigned EPA HWNs based on P/S code information, whereas TA-55-20 contains non-mixed waste. Other waste streams resulting from the same plutonium processing activities at TA-55 but differing in physical form and waste matrix code are listed in the Sampling Plan.

6.0 ASSIGNMENT OF WASTE MATRIX CODES

The waste matrix code S5300 is assigned to the waste streams TA-55-19 and TA-55-20 based on waste generation practices described in the TA-55 Waste Management Procedure, 1996 (TWCP-351), description of past segregation practices (TWCP-701, Section 2.1, page 4 of 43), and TA-55 process AK reports (TWCP-AK-2.1-002; TWCP-AK-2.1-003; TWCP-AK-2.1-004; TWCP-AK-2.1-005; TWCP-AK-2.1-006; and TWCP-AK-2.1-007). A more detailed waste matrix code can not be assigned to the TA-55-19 and TA-55-20 waste streams because TA-55 waste management personnel did not segregate plastic waste from cellulosic waste.

The following codes also apply to waste streams TA-55-19 and TA-55-20 from the Transuranic Waste Baseline Inventory Report (TWBIR), the TRUPACT II Content Code (TRUCON) (DOE/WIPP-89-004/Rev.13), the Radioactive Solid Waste Disposal (RSWD), and the Item Description Code (IDC) (Sampling Plan).

- TWBIR LA-M16 (TA-55-19) and LA-T16 (TA-55-20)
- TRUCON LA 116A, LA 116B, LA 116C, LA 116D, LA 116E, LA 116F, LA 116H, LA 116I
- RSWD A14, A15, A16, A17, A18, A60
- IDC 004 (combustible waste)

7.0 ASSIGNMENT OF WASTE MATERIAL PARAMETER CODES

~~Feed Materials Identification~~

Introductory sentence, not bullet

The TA-55 Plutonium ~~processing~~ facilities generate contaminated combustible debris waste primarily from:

- Plastic materials that result in combustible waste such as Tygon tubing, polyvinyl chloride vials, plastic bags, old bag-out stubs, etc.

- Cellulose-based cleaning aids and personal protective equipment such as rags, paper wipes, laboratory coats, coveralls, booties, etc.

put Section 15 references in alphabetical order (move to precede "Nonconformance ...")

- *Acceptable Knowledge Documentation* (TWCP-QP-1.1-021)
- *Hazardous Waste Facility Permit Issued to the Waste Isolation Pilot Plant* (EPA No. NM4890139088) (Attachment B, Waste Analysis Plan)
- *Waste Analysis at Facilities that Generate, Treat, Store and Dispose of Hazardous Waste* (EPA) no italics Remind me to find the document identifier — JJm
- *Waste Characterization Data Reconciliation with Acceptable Knowledge* (TWCP-DTP-1.2-064)

Table ~~3~~ 4. Secondary Radionuclides in TA-55 TRU Waste

Secondary Radionuclide	P/S code generating waste
Americium-241 ~~Am-241~~	AO, AP, CA, CD, CF, CLX, CXL, DOP, EV, FA, HCD, HD, HP, IA, LR, MA, OH, PI, PR, PRR, PS, SS, SX, WE, XP; plus trace amounts expected in TRU waste generated by nearly all P/S codes, due to ingrowth from Pu-241 decay. Waste could be either depleted or enriched in Am depending upon whether the source of contamination is the process product or the process residues.
Americium ~~Am~~-243	BC, CA, DOP, JA, MA, PH, PI, SS, WE
Cerium ~~Ce~~-144	DOP, WE
Curium ~~Cm~~-244	DOP, IS (Mar-Apr 1987), ~~PI~~, WE
Neptunium ~~Np~~-237	ATL, BC, CA, CF, DOP, ED, EV, IS, JA, MA, Neptunium, PI, RB, RFX, WE; plus trace amounts expected in TRU waste generated by nearly all P/S codes, due to ingrowth from Am-241 decay
Protactinium ~~Pa~~-231	BC (1989), JA (1989), WE ~~, plus trace amounts expected in TRU waste~~
Plutonium ~~Pu~~-238	TDC
Plutonium ~~Pu~~-241	EV, IS, TDC
Thorium ~~Th~~-232	CF, DOP, PT, WE
Thorium ~~Th~~-232 enriched with ~~Th~~-230	BC, JA, WE
Uranium ~~U~~-233	DOP, WE
Uranium ~~U~~-235 or enriched uranium	CN, FF, GI, MW, OB, PD, PI, RS, SRL, UA; and P/S codes in nitrate operations (AL, AO, AP, AS, AT, ATL, BAC, BF, BL, BM, BU, CC, CD, CF, CH, COD, COL, CPOD, CR, DF, DP, DS, ED, ETD, EV, FA, FC, FX, GMS, HC, HCD, HD, HGMS, HP, HRA, IA, IS, LC, LG1, LG2, LR, MAG, MAS, MB, MELL, MF, ML, MPD, NC, NL, NR, OD, OH, OY, PA, PAF, PR, PS, PT, PTS, RB, RBJ, RC, RCM, RFX, RO, RR, SC, SP, SSD, SX, TDC, UPS, US, US2, VC, VP1, VP2, VP3, VUL, ZD)
Uranium ~~U~~-238 or depleted uranium	BC, CN, FF, GI, JA, LC, MW, OB, PD, PI, RC, RS, SRL, UA, UPS, US, WE,; and P/S codes in nitrate operations (AL, AO, AP, AS, AT, ATL, BAC, BF, BL, BM, BU, CC, CD, CF, CH, COD, COL, CPOD, CR, DF, DP, DS, ED, ETD, EV, FA, FC, FX, GMS, HC, HCD, HD, HGMS, HP, HRA, IA, IS, LC, LG1, LG2, LR, MAG, MAS, MB, MELL, MF, ML, MPD, NC, NL, NR, OD, OH, OY, PA, PAF, PR, PS, PT, PTS, RB, RBJ, RC, RCM, RFX, RO, RR, SC, SP, SSD, SX, TDC, UPS, US, US2, VC, VP1, VP2, VP3, VUL, ZD)

Sources: TWCP-882, TWCP-AK-2.1-003, TWCP-AK-2.1-005

3.6.3.1

Acids and bases. Acids used in the TA-55 processes covered in this report are ascorbic acid, formic acid, hydrochloric acid, hydrofluoric acid, nitric acid, oxalic acid, perchloric acid, stearic acid, sulfuric acid, and superacids (e.g., HSO_3F). Bases used in these processes are calcium hydroxide, magnesium hydroxide, potassium hydroxide, and sodium hydroxide. No EPA HWNs are applicable to the use of these chemicals in the TA-55 processes for the following reasons:

- D002 (corrosivity) does not apply to the solid debris waste because there are no free liquids in this waste.

- D001 (ignitability) does not apply to wastes in waste streams TA-55-19 or TA-55-19A despite the use of spent non-halogenated solvents (HWN F003) and the possible production of perchlorate salts in perchloric acid solutions for the following reasons:
  - Perchloric acid solutions are sent to cement fixation.
  - Any perchlorate salts that might be present on rags are removed when the rags are rinsed before being discarded ~~with~~ the rinse water is sent to cement fixation.
  - Solutions containing spent non-halogenated solvents are sent to the RLWTF if they are below the DL for Pu.
  - Solutions containing spent solvents and above the DL for Pu are further treated by aqueous recovery processes as part of routine chloride and nitrate operations. Aqueous recovery involves dissolving any solid Pu in hydrochloric or nitric acid, followed by ion exchange to extract the Pu. The processed solutions are below the DL for Pu and are either sent to the RLWTF or to the evaporator for volume reduction. Evaporator bottoms are fixed in cement, a waste form for which ignitability is not a concern.
  - Rags, if contaminated with spent solvents and above the DL for Pu, are thermally decomposed, which destroys any organic component.
  - Although contaminated rags that are below the DL for Pu are discarded as combustible debris, headspace gas analyses support the expectation that the solvents are not present in the packaged waste at levels of concern.
  - In addition, 100 percent of the waste containers are subjected to headspace gas analysis. Any container showing over 500 ppm total flammable volatile organic compounds (VOCs) is prohibited from being shipped to the WIPP. (For comparison, the explosive limit for acetone is 25,000 ppm.)

- Formic acid and hydrofluoric acid are listed in Appendix VIII of 40 CFR Part 261, for their corrosive and toxic characteristics, with EPA HWNs U123 and U134. However, these HWNs are not applicable to the manner in which these chemicals were used and discarded in the processes covered by this report.

- None of these are F, K or P-listed chemicals

3.6.3.2

Gases and cryogenic fluids. The following gases and cryogenic fluids used in the TA-55 processes are not identified as having hazardous characteristics in 40 CFR Part 261, including Appendix VIII in that regulation:

- argon
- carbon dioxide
- chlorine
- halogen fluorides
- hexafluoroethane
- hydrogen chloride
- krypton fluoride
- methane
- nitrogen (gas)
- nitrogen (liquid)
- perfluoropropane
- tetrafluoromethane

The following gases used in the TA-55 processes are identified in Appendix VIII of 40 CFR Part 261 as having hazardous characteristics. The chemical name is followed by the listed EPA HWN and the P/S codes in which the gas is used:

- Fluorine (P056) is used in P/S codes CV, FDL, FLU, PI, SO
- Hydrogen fluoride (U134) is used in P/S codes MP, PI
- Nitrogen dioxide (P078) is used in P/S code HRS
- Phosgene gas (P095) is used in P/S code PTP

No EPA HWNs are applicable to the use of these gases in the TA-55 processes. Compressed gas cylinders are kept outside of the gloveboxes; most are even outside the building, and the gases are plumbed into the glovebox. Thus, the gas cylinders are not discarded with TRU wastes. Additional reasons are as follows:

- D002 (corrosivity) does not apply to the use of hydrogen fluoride because there are no free liquids in the solid TRU waste.

- D003 (reactivity) does not apply to phosgene because any excess chemical was passed through a solution of sodium hydroxide or potassium hydroxide, thereby producing a chloride salt solution.

- P056 (fluorine), P078 (nitrogen dioxide) and P095 (phosgene) are not applicable to the listed TA-55 processes because of the manner in which these gases are used and discarded in the processes covered by this report.

- Hydrogen fluoride (U134) is listed in Appendix VIII of 40 CFR Part 261 for its corrosive and toxic characteristics. However, this code is not applicable to the manner in which this gas is used and discarded in the processes covered by this report.

3.6.3.3

Metals. The following metals used in the TA-55 processes are not identified as having hazardous characteristics in 40 CFR Part 261, including Appendix VIII of that regulation: bismuth, bismuth-tin alloy, calcium, copper wool, gallium (metal, oxide or salt), gold, lanthanides, lutetium, niobium +1 percent zirconium metal, platinum, platinum-rhodium alloy, tantalum (metal, alloy, oxide or salt), titanium, uranium powder (depleted), vanadium, and zirconium alloy.

Several metals used in TA-55 processes are identified in 40 CFR Part 261 or in Appendix VIII of that regulation as having hazardous characteristics. The bullets below list the chemical name, its listed EPA HWN, the P/S codes in which the metal is used, and the applicability of the EPA HWNs for use of these metals in the TA-55 processes:

- Alkaline earth metals (D003) were used in P/S codes AC, AC1 and AC2; it is possible that one or more of these were pyrophoric. However, EPA HWN D003 does not apply to P/S codes AC, AC1, or AC2 because the metals are consumed or oxidized before discarding.

- Arsenic (D004) was used in P/S code PE between 1984 and 1985, and EPA HWN D004 is applicable to P/S code PE during this period.

- Cadmium (D006) applies to a limited number of anode heels produced in P/S codes ER, PX, and SS using cadmium as a solvent.

- Lead (D008) was used in P/S codes DOP, ER, KBTF, PX, and SS. For combustible debris waste, EPA HWN D008 is applicable to P/S codes DOP, KBTF, and PX. For P/S codes ER and SS, D008 is only applicable to the metal waste.

- Tin-lead (D008) solder was used in sensors in P/S code BT, but D008 is only applicable to the metal waste from this P/S code, and not to the combustible debris waste.

- Mercury (D009) applies to P/S code SSMD, in which it was used for about one week in the summer of 1994.

- Nickel powder was used in P/S code CO as a sintering aid. This metal is listed in Appendix VIII but no HWN is given.

- Sodium (D003) was used in P/S code EL. However, D003 does not apply in this case because excess Na is dissolved in Dowanol 80.

- Stainless steel (contains chromium, D007) was used in P/S code WE. However, EPA HWN D007 does not apply in this case. There is no potential to leach chromium because stainless steel is not exposed to strong acids in P/S code WE.

3.6.3.4

Inorganic chemicals. The following inorganic chemicals used in the TA-55 processes are not identified as having hazardous characteristics in 40 CFR Part 261, including Appendix VIII in that regulation: aluminum bifluoride, aluminum chloride, aluminum fluoride, aluminum nitrate, aluminum oxide, ammonium chloride, antimony pentafluoride, bromine, calcium carbonate, calcium chloride, calcium fluoride, calcium nitrate, cerium nitrate, cesium chloride, cobalt nitrate, dicesium hexachloroplutonate (DCHP), ferric ammonium sulfate hydrate, ferric nitrate, ferrous ammonium sulfate, ferrous chloride, ferrous sulfamate, FOOF, graphite, gypsum cement, hydrogen peroxide, hydroxylamine chloride, hydroxylamine hydrochloride, hydroxylamine nitrate, iodine, lanthanum nitrate, lithium chloride, magnesium chloride, magnesium oxide, magnesium perchlorate, molybdenum oxide, phosphates, Portland cement, potassium chloride, potassium fluoride, potassium permanganate, potassium thiocyanate, silicone lubricant, sodium bicarbonate, sodium carbonate, sodium chloride, sodium chlorite, sodium citrate retarder, sodium dithionate, sodium nitrate, sodium nitrite, sodium oxalate, sodium sulfate, sodium tetraborate, stannous chloride, thorium oxide, uranium oxide (depleted), zinc chloride, zinc stearate, and zirconium carbide. Some processes indicated the use of nitrate, chloride, carbonate, bicarbonate, oxalate, and nitrite salts of sodium, potassium, lithium, magnesium, calcium, and iron.

Several inorganic chemicals used in TA-55 processes are identified in 40 CFR Part 261 or in Appendix VIII of that regulation as having hazardous characteristics. Table 4 lists these chemicals, their HWN, P/S codes in which they were used, and the applicability of the HWNs to the use of these chemicals in TA-55 processes:

Table 5. Use of RCRA-Regulated Inorganic Chemicals in TA-55 Processes

Inorganic chemicals and P/S codes in which they were used	The following summarizes the applicability of RCRA D-listings and P-listings due to metals used in the processes:
Hydrogen peroxide	D001 (ignitability—oxidizer) and D003 (reactivity) do not apply to the use of hydrogen peroxide because there are no free liquids in the TRU solid waste
Lead hydroxide, oxide, or nitrate (P/S code AD)	D008 (lead) applies to P/S code AD.
Mercuric nitrate (P/S codes VP1 and VP3)	D009 (mercury) applies to P/S codes VP1 and VP3. Mercuric nitrate is used as a catalyst in P/S code VP1; the hydroxide cake produced in VP1 is processed in P/S code VP3.
Potassium dichromate (P/S codes AD, CS, CSE, DO, and SE)	D007 (chromium) applies to P/S codes AD, CS, CSE, DO, and SE because of the use of potassium dichromate as a titration endpoint indicator until end of 1993. The solution and precipitates were processed by hydroxide precipitation under the same codes. The chromium was incorporated as a contaminant in the hydroxide cakes.
Silver nitrate and other silver salts (P/S codes AC1, CPOD, CS, CSE, DO, SE)	D011 (silver) applies to P/S codes CW and CX due to the use of silver nitrate for chloride titrations under P/S codes CS, CSE and SE until 1993. The solution and precipitates were processed by hydroxide precipitation under P/S codes CW and CX.. Silver was incorporated as a contaminant in the hydroxide cakes. D011 (silver) applies to P/S code CPOD due to the use of silver nitrate as a catalyst from 1990 to 1994. D011 (silver) applies to P/S code AC1 due to the use of silver salts.
Sodium chromate (P/S code PT)	D007 (chromium) applies to P/S code PT due to the use of sodium chromate in the separation of thorium from plutonium and americium.
Uranium nitride, depleted (P/S code FF)	D003 (reactivity) does not apply to the use of uranium nitride in P/S code FF. Although this chemical is pyrophoric, its disposal in an oxidizing environment eliminates this characteristic because it is converted to uranium oxide. Uranium nitride is oxidized in the passivation furnace (P/S code PA) prior to discard.
Vanadium pentoxide (P/S code SS)	P120 (vanadium pentoxide) applies to waste generated under P/S code SD from February to March 1998, and under P/S code SS from May 27, 1998 to June 10, 1998.

3.6.3.5

Organic chemicals. The following organic chemicals used in the TA-55 processes are not identified as having hazardous characteristics in 40 CFR Part 261, including Appendix VIII in that regulation: 1-propanol, 3-in-1 household oil, acetonitrile, alkylating agents (unspecified), bromobenzene, bromocresol purple, carbon tetrafluoride, Citrapeel, DBBP (dibutyl butyl-phosphonate), DBBP (dibutyl butyl-phosphonate)/Isopar (isoparaffinic hydrocarbon solvent), diethyl oxalate, dihexyl n,n-diethylcarbamoylmethyl phosphonate (DHDCMP), diisopropyl benzene, Dow Corning 2000 Oil, Dowanol 80 (long-chain alcohol), ethanol, ethylene glycol, Fantastic, formamide, Fomblin brand pump oil, GoJo cleaner (kerosene derivative), hexane, hydrazine dihydrochloride, hydrazine hydrochloride, ion exchange resin, isopropanol, kerosene, Metalprep 79 (phosphoric acid-based metal cleaner), MolyKote, n-dodecane, Nuetracleaner #1, Nuetracleaner #2, octylphenyl diisobutyl carbamoylmethyl phosphine oxide (CMPO), oil (engine), organic liquid emulsifier, organicstrip, perchlorocarbons, phenolphthalein, phosphate buffer solution, phosphine oxide, phthalate buffer solution, polyethylene glycol, polyoxyethylene-20-sorbitan laurate (surfactant), SF-2I (as coolant), silicon adhesive, silicon defoamer, sugar, surfactants, tetraethylamine hydrochloride, tetraethylamine hydroxide, tetraethylammonium hydroxide, Texaco Regal 32 oil (cutting oil), thionyl chloride, tributyl phosphate (TBP), tributyl phosphate (TBP)/Isopar (isoparaffinic hydrocarbon solvent), tributyl phosphate and iodine in kerosene, trioctylphosphine oxide (TOPO), urea, vactra oil, vacuum grease, vacuum pump oil, WD-40, and Windex.

Several organic chemicals used in TA-55 processes are identified in 40 CFR Part 261 or in Appendix VIII of that regulation as having hazardous characteristics. Table 5 lists these chemicals, their HWNs, P/S codes in which they were used, and the applicability of the HWNs to the use of these chemicals in TA-55 processes.

4.0 DIVISION OF THE WASTE STREAM INTO LOTS

TA-55-19A is a subset (i.e., lot) of waste stream TA-55-19. Waste in this lot, which is expected to consist of only a few drums, is identical to the rest of the waste stream except for the possibility that the drums may contain vanadium pentoxide (EPA HWN P120), which was used only between 02/01/98 and 06/10/98 in two specific P/S codes.

TA-55-19A is not fully defined in the sense that a list of specific waste containers in this lot has not yet been prepared. This is because P/S codes are not always explicitly identified for waste items in TA-55 waste containers. However, the possibility of extracting this information from the waste item identifiers is being evaluated. If successful, this action will permit a listing of waste containers assigned to TA-55-19A.

Table 5. Use of RCRA-Regulated Organic Chemicals in TA-55 Processes

Organic Chemical and P/S Codes in Which It Was Used	Comments on Applicability of RCRA Codes
Acetone (P/S codes FF, ME, and MOX)	• F003 applies to P/S code ME because it may have been used in the glovebox for cleaning. • F003 does not apply to P/S code FF or MOX because it was only used outside the glovebox.
Benzene (P/S codes AC, AC1, AC2, and SA)	• D018 (benzene) applies to P/S codes AC, AC1, AC2, and SA • F005 applies to P/S codes AC, AC1, AC2, and SA, in which benzene was used as a solvent
Carbon tetrachloride (P/S codes AD, CV, PTP, and PX)	• D019 (carbon tetrachloride) applies to P/S codes AD, CV, PTP and PX. This chemical was used in PTP between 1/87 and 6/89. • F002 does not apply to P/S codes AD, CV, PTP, or PX because it was not used as a solvent or for degreasing.
Chloroform (P/S codes AC, AC1, AC2, APD, FF, and XO)	• D022 (chloroform) applies to P/S codes AC, AC1, AC2, APD, FF and XO. Concentrations in P/S code FF are expected to be below RCRA threshold because freeze-drying should have removed most, if not all, of the residual chloroform before the microspheres were taken into the glovebox for sintering.
Diethyl ether (P/S code SA)	• F003 applies to P/S code SA because of solvent use.
Freon and Freon TF (P/S codes CA, DA, MA, MW, PD, PF, SCB, SRL, UA, VD, WE and XO)	• F002 applies to P/S codes DA, MA and XO. • F002 does not apply to P/S codes CA, MW, PD, SCB, SRL, UA, VD and WE. Although Freon TF is used as a solvent to clean metal parts, the parts are routinely air-dried to avoid the need for cellulosic wipes. • F002 does not apply to P/S code PF because Freon was used as a coolant for a cutting saw.
Methanol (P/S codes AD and SO)	• F003 applies to P/S code AD because it may have been used for cleaning inside the glovebox. • F003 does not apply to P/S code SO because it was used in a cold trap outside the glovebox.
Methylene chloride (P/S code AC1)	• F002 applies to P/S code AC1 because this chemical was used as a solvent (MA) and a paint stripper (XO).
Methyl ethyl ketone (P/S codes MA and XO)	• D035 (methyl ethyl ketone) applies to P/S codes MA and XO. • F005 applies to P/S codes MA and XO, in which methyl ethyl ketone was used as a solvent (MA) and paint stripper (XO).
Pyridine (P/S codes AC and SA)	• D038 (pyridine) applies to P/S codes AC, AC2 and SA • F005 applies to P/S codes AC, AC2 and SA, in which pyridine was used as solvent.
Tap Magic (contains 1,1,1 trichloroethane) (P/S code MA)	• F002 does not apply to P/S code MA because Tap Magic is used as a metal cutting fluid or coolant, not as a solvent. Its use was discontinued in 1992.

5.0 CORRELATIONS BETWEEN WASTE STREAMS

Waste Streams TA-55-19 and TA-55-20 have been discussed together in this AK Summary Report. These waste streams are similar in physical form and waste material content. They differ only in that TA-55-19 is assigned EPA HWNs based on P/S code information, whereas TA-55-20 contains non-mixed waste. Other waste streams resulting from the same plutonium processing activities at TA-55 but differing in physical form and waste matrix code are listed in the Sampling Plan. These include waste streams for more specific types of waste, such as metal debris, glass, graphite, HEPA filters, and cemented waste, as well as less specific waste streams such as combustible/noncombustible debris. new TP

6.0 ASSIGNMENT OF WASTE MATRIX CODES

The waste matrix code S5300 is assigned to the waste streams TA-55-19 and TA-55-20 based on waste generation practices described in the TA-55 Waste Management Procedure, 1996 (TWCP-351), description of past segregation practices (TWCP-701, Section 2.1, page 4 of 43), and TA-55 process AK reports (TWCP-AK-2.1-002; TWCP-AK-2.1-003; TWCP-AK-2.1-004; TWCP-AK-2.1-005; TWCP-AK-2.1-006; and TWCP-AK-2.1-007). A more detailed waste matrix code can not be assigned to the TA-55-19 and TA-55-20 waste streams because TA-55 waste management personnel did not segregate plastic waste from cellulosic waste.

The following codes also apply to waste streams TA-55-19 and TA-55-20 from the Transuranic Waste Baseline Inventory Report (TWBIR), the TRUPACT II Content Code (TRUCON) (DOE/WIPP-89-004/Rev.13), the Radioactive Solid Waste Disposal (RSWD), and the Item Description Code (IDC) (Sampling Plan).

- TWBIR LA-M16 (TA-55-19) and LA-T16 (TA-55-20)
- TRUCON LA 116A, LA 116B, LA 116C, LA 116D, LA 116E, LA 116F, LA 116H, LA 116I
- RSWD A14, A15, A16, A17, A18, A60
- IDC 004 (combustible waste)

Insert new beginning from Section 3.6.1 (First sentence, plus 4 bullets) →

7.0 ASSIGNMENT OF WASTE MATERIAL PARAMETER CODES

The following waste material parameter codes (WMP) are assigned to waste streams TA-55-19 and TA-55-20 based on ~~(1)~~ this information and knowledge of waste generation practices described in the TA-55 Waste Management Procedures (see Section 3.2); ~~(2) TA-55 process AK reports (TWCP-AK-2.1-002; TWCP-AK-2.1-003; TWCP-AK-2.1-004; TWCP-AK-2.1-005; TWCP-AK-2.1-006; and TWCP-AK-2.1-007); and (3)~~ WIPP-compliant waste characterization data from real-time radiography and visual examinations (Section 14). These ~~WPCs~~ WMP codes have been verified ~~by~~ with

- Cellulosics
- Plastics (waste materials)
- Rubber
- Steel (packaging materials)

move this sentence to end of bullets (top of next page)

The reliability of this AK information can be assessed in part based on a review of headspace gas analyses for containers assigned to waste stream TA-55-19 (Section 14.~~0~~4).

8.2 Toxicity Listings

Both TA-55-19 and TA-55-19A are conservatively assigned the D-listings of D004, D005, D006, D007, D008, D009, D010, D011, D018, D019, D021, D022, D035, D038, D039, and D040.

TA-55-20 has no D listings.

No D-listings are applicable to combustible debris waste generated by the following P/S codes: AC3 (inactive), ACC, AO (Assembly Operation), AO (Americium Processing Calcination), ARI, BA, BAC, BC, BL, BM, BT, CA, CC, CH, CN, CO, COD, CR, CRD, CT, DF, DOP, DP, DT, ELW, EM, EVAC, FA, FC, FSPF, GI, GMS, HC, HG, HRS, ID, IN, ITF, ITF4, JA, LC, LIBS, MAG, MAS, MBC, MF, MO, MOX, MP, MW, NCD, NEPTUNIUM, NR, OB, OM, OR, OY, PA, PAF, PD, PF, PH, PI, PIG, PPD, PR, PS, RAP, RAP2, RB, RBJ, RCM, RD, RFX, RL, RM, RS, SBB, SCB, SMP, SRL, SX, TIGR, UA, UPS, US, US2, VD, VP2, VS, WE,WLT, and ZD.

Based on information in the TA-55 process AK reports, combustible debris waste generated by the following P/S codes are conservatively assigned EPA HWNs due to the potential presence of D-listed constituents. In many cases, the applicability of the HWN is limited to waste generated during a specific period of time, as discussed in the appropriate process AK report. If a D-listed constituent is known to be present in the waste at some level, the D-code is conservatively assigned unless analytical data confirm that its concentration is below the regulatory level.

AC	D007, D009, D011, D018, D022, D038
AC1	D007, D009, D011, D018, D022
AC2	D007, D009, D011, D018, D022, D038
ACD	D005, D006, D007, D008, D011
ACL	D007, D009
AD	D004, D005, D006, D007, D008, D009, D010, D011, D019, D039
AL	D005, D006, D007, D008, D011
AP	D007, D009
APD	D007, D008, D009, D019, D021, D022, D039
AS	D006, D007, D008, D011
AT	D005, D006, D007, D008, D011
ATL	D005, D006, D007, D008, D011
AX	D007, D009

move AD ~~up~~ to line up with codes

SC	D005, D006, D007, D008, D011
SE	D007, D008, D009, D039
SL	D005, D006, D007, D008, D011
SO	D004, D005, D006, D007, D008, D009, D010, D011
SP	D007
SS	D006, D008
SSD	D006, D007, D008
SSMD	D009 (D listing applies only from 06/94 to 08/94)
STF	D007
TDC	D005, D006, D007, D008, D011
VC	D006, D008
VP1, VP3	D009 (D listing applies only from 09/85 to 10/85)
VU, VUL	D005, D008
WM, X0, XO	D007, D008, D009, D022, D035, D040 (assigned in order to be conservative, as discussed in *Acceptable Knowledge Summary Report for Miscellaneous Operations at TA-55* (TWCP-AK-2.1-004,R.2, Section 3.4.9))
XES	D004, D005, D006, D007, D008, D009, D010, D011
XP	D004, D005, D006, D007, D008, D009, D010, D011

These HWNs are ~~These RCRA codes~~

Make this a NOTE:

9.0 VERIFICATION THAT IGNITABLE, REACTIVE, AND CORROSIVE WASTES WERE EXCLUDED

According to the WIPP WAP, "The prohibition of liquids and containerized gases prevents the shipment of corrosive, ignitable, or reactive wastes." The waste streams covered by this AK report have no listings for corrosivity, reactivity, or ignitability. Administrative controls on waste packaging were in place at various times to ensure the absence of such items from the waste stream.

- Liquids were prohibited from solid waste streams at TA-55 when the facility opened in January 1978. A waste management procedure written to cover operations at the new facility, *TA-55 Standard Operating Procedure (SOP) 406-GEN-R00*, stated that "Liquids are not permitted in any container of solid waste materials" (TWCP-3943).

- Chemical Waste Disposal Requests (see Attachment 5), introduced in June 1980, included check boxes which the waste generator was required to check if the waste contained corrosive acids or bases, or pyrophoric, flammable, corrosive, explosive, toxic, carcinogenic or highly reactive materials.

- The Certification Plan (TWCP-697) and related Generator Attachment for TA-55 (TWCP-701) were implemented in 1987. Waste generators were required to sign a statement on the WODF (see Attachment 4, pp. 4 and 5) documenting that the waste contained "no free liquids, pyrophorics, explosives, compressed gases, powders or

materials other than the indicated matrix." Checkboxes were also present for indicating the presence or absence of corrosive chemicals. Full implementation of this generator statement occurred in May 1987.

- Waste management inspectors perform visual examination of the waste prior to its initial packaging, thus allowing the inspectors to verify the generator's WODF statement (TWCP-701, Sections 3.8.5 to 3.8.6).

- In addition to the above-mentioned prohibitions on explosives in waste, explosives were altogether prohibited from TA-55 until installation of the Impact Test Facility in the early 1990s. In case of a misfire or unconsumed explosives, a procedure is in place at TA-55 to ensure that explosives do not enter the waste stream (TWCP-4720).

- The Waste Profile Request Form (WPRF), which has been in use at LANL since 1991, includes a statement which must be authenticated by the waste generator, that the waste is not ignitable (flash point >200°F), reactive, or corrosive.

- The TA-55 Generator Attachments to the Certification Plan were updated in 1995 (TWCP-700) but the prohibition on liquids in the waste, and the waste management inspection, remained in effect.

Hence, since the inception of operations at TA-55, corrosive and reactive wastes have been excluded from TA-55 solid wastes through the prohibition of liquids.

Controls have also been in place to ensure the exclusion of ignitable constituents. D001 does not apply to wastes in these waste streams despite the use of spent non-halogenated solvents (HWN F003), for the following reasons:

- Solutions containing spent non-halogenated solvents are sent to the RLWTF if they are below the DL for Pu.

- If above the DL, the solutions are sent to aqueous processes as part of chloride or nitrate operations. Aqueous recovery steps include dissolution of any solid Pu in hydrochloric or nitric acid, followed by Pu recovery by ion exchange. The solutions are then below the DL and are either sent to the RLWTF or to the evaporator.

- Rags that are above the DL for Pu are thermally decomposed, which destroys any organic component.

- Rags that are below the DL for Pu are discarded as combustible debris, but headspace gas analyses support the contention that the solvents are not present in the waste at levels of concern (Section 14.~~0~~ .4).

- Finally, 100 percent of the drums are subjected to headspace gas analysis, and drums showing over 500 ppm total flammable VOCs are prohibited from being shipped to WIPP. (For comparison, the explosive limit for acetone by itself is 25,000 ppm.)

This limit is quite conservative.

The absence of these prohibited items is verified through radiography of each waste container and visual examination of selected containers during TWCP characterization activities. Any free liquids are absorbed onto kitty litter (vermiculite) and discarded in an appropriate waste stream and containerized gases that are found to be present are removed, or the container is tagged as non-compliant by filing a Prohibited Waste Report in accordance with *Nonconformance Reporting and Tracking* (TWCP-QP-1.1-007).

10.0 VERIFICATION THAT INCOMPATIBLE CHEMICALS WERE PROHIBITED

Controls are in place to ensure chemical compatibility for the waste contents and the TRUPACT-II. Section 9.0 summarizes administrative controls in place at TA-55 that prohibit incompatible chemicals in the waste, and measures taken to verify their absence. In addition, all waste containers shipped from TA-55 to TA-54 for storage were evaluated for potentially incompatible chemicals in accordance with 49 CFR Subpart C—Segregation and separation chart of hazardous materials; Section 177.848, Segregation of hazardous materials, and were determined to be in compliance with this requirement.

For waste that has been generated after the implementation of the 1987 Certification Plan, Generator Attachments, waste generators signed a statement on the WODF for each waste items specifying that the waste contained "no free liquids, pyrophorics, explosives, compressed gases, powders or materials other than the indicated matrix." Prior to the installation of the Impact Test Facility in the early 1990s, explosives were prohibited from TA-55. In addition, waste management inspectors performed visual inspection of the waste prior to its initial packaging, thus allowing the inspectors to verify the generator's WODF statement.

A chemical compatibility analysis was performed for TRUCON codes 116/216 (combustible waste) which indicated that all chemicals and the waste matrix were compatible at levels greater than trace amounts (*Content Code Assessments for LANL TRUCON Codes* [DOE/WIPP-89-004]). During the process AK search, ~~additional~~ chemicals ~~were identified and are listed in Section 3.6.3~~ that necessitated a new compatibility analysis ~~is underway; but since~~ these additional chemicals are only present at trace quantities in the TA-55-19 and TA-55-20 waste streams, no incompatibilities ~~should~~ were found to exist. (TWCP-xxx). Because

stet stet

awaiting input from John

11.0 VERIFICATION THAT THERE ARE NO COMPRESSED GASES, FREE LIQUIDS, NONRADIONUCLIDE PYROPHORICS, SEALED CONTAINERS GREATER THAN FOUR LITERS IN VOLUME, OR >1% RADIONUCLIDE PYROPHORICS

Most gases used at the TA-55 Plutonium Facility are stored outside the building and the gas is plumbed into the glovebox from outside the building (TWCP-4164). Occasionally, a lecture bottle may have been used for a process inside the building, but these bottles were kept outside of the glovebox with the gas plumbed into the glovebox. Consequently, compressed gas cylinders or containers are not expected to be in any of the TRU wastes generated by TA-55 operations.

of these oils are known to contain PCBs. All transformers known to contain PCBs have been tracked from the time of startup of TA-55 in 1978. Whenever any transformer oil is drained, it is handled by a subcontractor who is wholly responsible for its disposal (TWCP-AK-2.1-005, R.2, Section 9.0). This oil does not enter the LANL disposal operations.

13.0 DETERMINATION OF THE MAXIMUM NUMBER OF CONFINEMENT LAYERS PERMITTED FOR WASTE PACKAGING

Waste streams TA-55-19 and TA-55-20 are primarily generated from operations performed in gloveboxes. The waste material is placed directly into bag-out bags (also called inner bags) through an opening in the glovebox where the bag is attached, and the bag is then closed and detached from the glovebox. Waste streams TA-55-19 and TA-55-20 may also be generated from "hot jobs" outside of the glovebox, such as valve changes, or from decontamination of spills or other releases. In these cases, the waste is placed directly into one (or possibly more) inner bags at the work area. The maximum number of confinement layers in any case is six (TWCP-816). This upper limit has been confirmed ~~by~~ by RTR and VE data (section 14).

A minor source of waste streams TA-55-19 and TA-55-20 is room trash that was originally considered low-level waste, which is collected in plastic bags inside cardboard boxes. Occasionally, when assayed, these boxes are determined to be TRU waste. These boxes may be sorted to remove the "hot" item, or the whole box may be bagged and sent to the TRU packaging area for placement in drums containing waste streams TA-55-19 or TA-55-20, as appropriate. When this occurs, the P/S code WM is assigned to the waste. Due to the additional layers of plastic that are present when this operation occurs, drums with the P/S code WM are assumed to contain up to two more layers of internal packaging than other drums.

Waste drum packaging procedures for waste streams TA-55-19 and TA-55-20 have gone through several changes since the beginning of operations at TA-55. TRUCON Code assignments made by the waste generator are compiled in the Sampling Plan. However, in the absence of this information, TRUCON codes will be assigned to the waste container in accordance with the default packaging configurations and associated TRUCON codes shown in Table 6, that reflect the packaging protocols in effect during different periods of time at TA-55 (TWCP-816).

Table ~~6~~ 7 Maximum Layers of Confinement for be Used for TA-55-19 and TA-55-20 Waste Containers in the Absence of More Specific Waste Characterization Data

Time Frame	P/S Code	Layers of Confinement*	TRUCON Code

(section 14.2).

AK information has been compared with visual examination data for about 22 containers so far in waste streams TA-55-19 and TA-55-20, in accordance with *Reconciliation of Visual Examination and Radiography Information* (TWCP-QP-1.1-028). In two cases, the number of layers of packaging observed during visual examination was greater than the number of layers reported by the waste generator, and an incorrect TRUCON code was assigned by the waste generator. It is possible that the extra plastic layers were breached (i.e., these were confining layers) but that the VE inspection did not catch this detail. However, the conservative conclusion is that these discrepancies indicate that TRUCON code assignments by the waste generator must be viewed with caution. Consequently, the most conservative TRUCON code will be assigned to each waste container in waste streams TA-55-19 and TA-55-20, in accordance with the following guidance:

Add text about High density plastic layer from Kyhan report

a) ~~Continue to use~~ The default TRUCON codes from Table 7 will be assigned if the waste generator has not assigned a TRUCON code.

b) The TRUCON code assigned by the waste generator will be used only if it has been positively confirmed by RTR or VE data.

c) If no VE data are available, and if the RTR data are indeterminate, then the default TRUCON code will be assigned to the container.

This guidance only applies to retrievably stored waste. It is assumed that newly generated waste packaged under procedures approved by TWCP and CBFO will be assigned correct TRUCON codes.

14.0 CONFIRMATION OF AK INFORMATION FOR WASTE STREAM

Characterization data at least acquired by WAP-compliant ~~TWCP~~ activities provide a means to judge the reliability of AK information. Radiography, radioassay, and headspace gas analysis are conducted on all retrievably stored containers of debris waste, and VE is being conducted on 50 containers from waste streams TA-55-19 and TA-55-20. Relevant aspects of the data produced by these activities are summarized in the sections below, focusing on the extent to which the data confirm AK information and identifying aspects for which additional AK documentation or research may be warranted.

14.1 Radiography Data

Radiography data are examined to confirm AK information about WMC assignments, layers of packaging, absence of prohibited items, and the relative volumes or weights of waste matrix parameters for a waste stream. The WMC for waste streams TA-55-19 and TA-55-20 is S5300 (combustible debris). Thus far, 265 containers, or about 6 percent of the 4454 containers in these two waste streams (Sampling Plan, Revision 3), have undergone RTR, with the data contained in WIPP-compliant batch data reports. The following observations are made from an examination of these data, as summarized in Table ~~X~~ 5 8 and 9:

Table ~~X~~ 8. RTR waste characteristic data for waste streams TA-55-19 and TA-55-20

Evaluated waste characteristic	Number of drums			
WIPP-compliant RTR data				
• TA-55-19	245	out of	4173	6% of waste stream
• TA-55-20	20	out of	281	7% of waste stream
WMC discrepancies				
• TA-55-19	3	out of	245	1% of drums examined
• TA-55-20	0	out of	20	0% of drums examined
Excluding drums with confirmed WMC discrepancy				
Free liquids (no PWR required; all <1" of container or 1% of drum)	34	out of	262	13 % of drums examined
Sealed containers > 4L (PWR required)	31	out of	262	13 % of drums examined
Pressurized containers	0	out of	262	0 % of drums examined
Leaded gloves	13	out of	262	5 % of drums examined
Unpunctured liner	0	out of	262	0 % of drums examined
Other prohibited items	0	out of	262	0 % of drums examined
Excluding drums with PWRs				
Number of layers	Metal / Plastic / Drums			
← Indeterminant	0 / Indeter / 109		Indeterminant due to number of plastic horsetails:	
	1 / Indeter / 2			
	Subtotal	111	out of 231	48% of drums
Less than or equal to 1	0 / 1	2	out of 231	1% of drums
Less than or equal to 2	0 / 2	21	out of 231	9% of drums
Less than or equal to 3	0 / 3	95	out of 231	41% of drums
Less than or equal to 4	1 / 3	2	out of 231	1% of drums
Less than or equal to 5	None observed	0	out of 231	0% of drums
Less than or equal to 6	None observed	0	out of 231	0% of drums
Proportion of combustible waste in drum (weight %)				
• Less than 25%	0	out of	231	0 % of drums examined
• 25 to 50%	1	out of	231	< 1 % of drums examined
• 50 to 75%	7	out of	231	3 % of drums examined
• More than 75%	223	out of	231	97 % of drums examined

Put in separate table to clarify presentation

006
007
008 – 4797
009
013

same footnote for Table 9.

Data sources: RTR batch data reports TWCP-4019, 4020, 4021, 4080, 4219, 4399, 4400, 4457, 4458, 4459, 4464, 4471, 4542, 4543, 4544, 4545, 4566, 4570, 4572, 4573, 4574, 4577, 4721, 4835; RTR batch data reports still in Project-level review: LA01-RTR-006, LA01-RTR-007, LA01-RTR-008, LA01-RTR-009, LA01-RTR-013.

Check if any of these are closed now

New Table 9. RTR packaging data for waste streams TA-55-19 and TA-55-20

Maximum number of layers	Metal layers	Plastic layers	No. of drums	% of total examined
1	0	1	2	1 %
2	0	2	21	9
↓	↓		95	41
6	None observed		0	0
Indeterminant	0	1		48

- confirmation of WMC S5300 for 98.9 percent of the drums examined
- identification of WMC discrepancies for 3 containers (1.1 percent of the drums examined), which must be reassigned to other waste streams
- identification of potentially sealed containers > 4 liters in 13 percent of the drums, for which PWRs were submitted
- confirmation of the absence of any other prohibited item or condition requiring a PWR
- confirmation of 4 or fewer packaging layers for 52 percent of the drums. Plastic packaging layers for the remaining 48 percent were indeterminate due to the large amount of horsetails present in the drums
- confirmation of the waste stream description:
- 97 percent of the drums contain more than 75 wt percent combustible waste;
- 86 percent of the drums contain less than 5 wt percent metal waste, and 94 percent contain less than 10 wt percent metal waste.

(B)

13 — 4190
25 - 3291
26 - 3290
27 - 3289
28 - 3288

Changes in waste stream assignment because of characterization data are documented in accordance with *Waste Characterization Data Reconciliation with Acceptable Knowledge* (TWCP-DTP-2.1-064).

NCRs should be listed on AK Roadmap

AK information resolved an apparent WMC discrepancy for several drums in waste stream TA-55-19 which contained material identified as metal by the RTR operator, thereby leading to an apparent WMC of S5110 (for metal debris) (NCR-00-013, NCR-00-025, NCR-00-026, NCR-00-027, NCR-00-028). After reviewing with the generator how these drums were packaged, the generator determined that these drums were packaged with very dense in-house fabricated plastic material (Kynar, also known as PVDF) used to line gloveboxes and build equipment in chloride operations starting in about 1988. Hence, the AK WMC S5300 was correct.

14.2 Visual Examination Data

Add to Section 15 (References)

VE data are used to confirm AK information on waste stream descriptions, WMC, the absence of prohibited items, the number and type of confining layers, and the relative volumes and weights of waste matrix parameters. AK packaging and WMC information have been evaluated by VE for about 22 containers so far in waste streams TA-55-19 and TA-55-20, in accordance with *Reconciliation of Visual Examination and Radiography Information* (TWCP-QP-1.1-028). These 22 drums were packaged between 11/85 and 8/97 (Sampling Plan, Appendix D). P/S codes are available for the waste items packaged in these drums, as documented in radioassay batch data reports (TWCP-4024, TWCP-4025, TWCP-4052, TWCP-

4158, TWCP-43~~0~~3) and waste generator records (TWCP-5086). (The codes for these drums are listed in Table ~~8~~ 11, which is discussed in section 14.3). VE results are summarized in Table ~~8~~ 10, from which the following observations are made:

- VE confirmed the AK WMC for all of these drums, reporting WMC S5300 for 8 drums, and S5310 for 14 drums.

- The maximum number of confining layers observed by VE was five (for one drum), consistent with AK information indicating that the number of layers is six or less (TWCP-816; also Table ~~8~~ 7 of this report).

NOTE: RTR data for the number of plastic layers in this particular drum were indeterminate.

- No closed liners were found by VE, which confirmed AK and RTR information.

- For 5 drums, the number of confining layers observed during VE (2 to 4) was greater than the number of layers associated with the TRUCON code assigned for these drums by the waste generator (LA116C, 1 layer).

- For 4 of the above drums, the default AK value (LA116E, 1 layer) would also have been less conservative than the VE findings. All 4 had been packaged after January 1997 such that no more than 1 layer was expected (Table 6).

A conservative conclusion is that these discrepancies indicate that TRUCON code assignments by the waste generator must be viewed with caution, at least with respect to waste containers packaged in 1997 when TA-55 personnel were transitioning from one packaging procedure to another. Additional investigation is needed to remedy this discrepancy in reporting packaging layers.

14.3 Radioassay Data

Radioassay data are examined to confirm AK information on plutonium material type and mass, the presence of other radionuclides contributing to the total drum activity, and evidence for fractionation of other actinides (e.g., uranium, americium) relative to plutonium during material processing. Table ~~8~~ 11 summarizes information relevant to these evaluations for the 22 drums from TA-55-19 and TA-55-20 that have undergone VE. These data confirm the following AK information:

- the dominant isotope in all drums is Pu239

- the material type is MT52 or MT53 for all drums

Table ~~8~~ 10. VE data for waste streams TA-55-19 and TA-55-20

Characterization data	Number of containers				Comments
	AK (see Note 1)		RTR	VE	
Waste Matrix Code					
S5000	—		—	—	Positive confirmation of AK WMC by RTR and VE for all 22 drums
S5300	22		22	8	
S5310	—		—	14	
Maximum # of layers and associated TRUCON codes	Default from Table	Assigned in SP	See Note 2		Number of confining layers • AK and VE match for 3 drums • AK more conservative than VE for 14 drums • AK from waste generator was less conservative than VE for 5 drums
	6			—	
0 LA116G	—	—		2	
1 LA116C, E, F	—	6		2	
2 LA116B, D	—	—		9	
3 None	—	—		8	
4 LA116A	4	4		1	
5 LA116H	—	—		—	
6 LA116I	8	—			

SP—Sampling Plan (Rev 3) need to line up rows

Notes:

1. AK information for WMC and TRUCON code assignments is from the Sampling Plan, Rev 3. If no TRUCON code was assigned, then the default code was determined from Table ~~6~~ 7 using AK information on packaging dates and P/S codes as documented in the Sampling Plan.
2. RTR data indicated no metal packaging layers for any of these drums, which was consistent with AK information and confirmed by VE. The number of plastic packaging layers was indeterminate by RTR except for one drum with three layers, which was consistent with the default TRUCON code and confirmed by VE (TWCP-4393).

Data sources: VE batch data reports TWCP-3947, 3948, 3949, 3950, 3951, 4022, 4326, 4327, 4392, 4393, 4394, 4427; VE batch data reports still in Project-level review: LA00-3.4.1-005, LA00-3.4.1-006, LA01-VE-001, LA01-VE-002, LA01-VE-004, LA01-VE-005.

~~Attachment~~ Check if any closed yet — Friday?

Table ~~1~~. Radioassay Data for Waste Streams TA-55-19 and TA-55-20

Radionuclide Characteristics	Number of drums	Comments
Pu isotopic fractions		Dominant isotope is Pu239 in all drums
• Pu238 / total Pu	22	0.010 to 0.069
• Pu239 / total Pu	22	0.911 to 0.941
• Pu240 / total Pu	22	0.057 to 0.085
• Pu241 / total Pu	22	0.14 to 0.32
• Pu242 / total Pu	22	0.009 to 0.055
Material type		
• MT52	19	
• MT53	2	
• MT52/53 mix	1	
Total Pu mass, expressed as ratio of AK data to NDA data		AK data from Sampling Plan (Rev 3) AK/NDA ratios range from 0.6 to 1.4
• AK/NDA < 0.7	1	
• 0.7 < AK/NDA < 1.3	17	
• AK/NDA > 1.3	4	
Other actinides present at detectable levels (uncertainties ≤ 21.5%)*		*Range of ratios of nuclide to total Pu* Measured ratios / Calculated upper bound (Table 6)
• Am241	22	1×10^{-3} to 9×10^{-3} / 2×10^{-3} to 3×10^{-5}
• Am243 ~~(uncertainty ≤ 21.5%)~~	22	4×10^{-7} to 4×10^{-6} / Not applicable
• Np237 ~~(uncertainty ≤ 21.5%)~~	22	2×10^{-4} to 1×10^{-2} / Not applicable
• U234	21	7×10^{-3} to 6×10^{-2} / 2×10^{-5} to 2×10^{-5}
• U235	5	3×10^{-3} to 5×10^{-2} / 9×10^{-4} to 1×10^{-3}
• U238	0	No measurable U238 / Not applicable
Other radionuclides present at detectable levels (uncertainties ≤ 21.5%)*		Note Th232 is not detectable by the methods used
• Cs137	16	
• Pa231 (uncertainty < 21.5%)*	~~12~~ 9	
• No other detectable nuclides	2	
Ratio of measured ratio (Am241/Total Pu) to calculated upper bound (0.002, Table ~~1~~ 2)		
• Ratio < 1	2	Am241 could be from decay of Pu241
• 1 < ratio < 2	7	Process waste probably enriched in Am241
• 2 < ratio < 3	7	Process waste enriched in Am241
• Ratio > 3	6	Process waste enriched in Am241
P/S codes for waste items present in these drums (TWCP-5086, ——————) The number of drums containing waste items from each code is given in parentheses, if more than one.		
• Chloride operations	CSE, CW, CX (3), CXL (7), MB, MS	
• Metal operations	CA (2), FF, MA, MW, PH, SRL	
• Miscellaneous operations	AD (2), CV, IB (5), ME, WM (3), XP	
• Nitrate operations	ATL, BM (4), COD, DS (3), ED (7), EV (4), HCD, LR (4), MAG, NC (6), NL (2), OD, PR (2), RBJ, RR (2), SC (8), SP (4), SSD	
• Pyrochemical operations	ER (3), MO, OR (3), SS (3)	
• Special processing	None	

June – ask Hanna about P/S codes in S drums. Otherwise cite FRAM BDR

NDA—nondestructive assay

Data sources: Radioassay batch data reports TWCP-4009, 4023, 4024, 4025, 4052, 4078, 4158, 4159, 4212, 4225, 4226, 4303; ~~and Sampling Plan (Rev 3), TWCP-5086, TWCP-2130.~~

* The rationale for this MDL cutoff (21.5% uncertainty) is given in TWCP-2130.

- all these drums qualify as ~~containing~~ TRU waste

- AK information on total mass of Pu in each drum is within 30 percent of the TWCP assay value for 17 drums (77 percent). AK mass for the remaining five drums (23 percent) is within 40 percent of the TWCP assay value.

- As indicated by AK information, all drums contain low but detectable quantities of Am-241, Am-243, and Np-237. A significant proportion also contains Cs-137 and Pa-241.

- No U-236 or U-238 was detected, confirming AK information that uranium is not expected to be present in process waste generated under the P/S codes listed as the source of waste in these drums

- U-235 is present only at trace levels in 5 drums

- In 20 drums (91 percent), Am-241 and U-234 are enriched beyond what would be predicted if they were present solely due to the decay of their precursors in the source Pu, indicating that significant fractionation of Am and U from Pu occurs during processing operations

14.4 Headspace Gas Data

Headspace gas data are examined to confirm AK information about the presence or absence of hazardous constituents in a given waste stream, and the assignment of each drum to the appropriate mixed or nonmixed waste stream. Table 10 summarizes VOC target analyte concentrations for headspace gas samples from 55 containers assigned to waste stream TA-55-19. (No approved data are yet available for drums from waste stream TA-55-20.) These data confirm the AK information:

- Altogether, 13 different VOCs were detected in these drums. All are documented as having been present or used in TA-55 processes contributing to waste stream TA-55-19, and HWNs have already been assigned to this waste stream for these constituents.

- Only one VOC, methylene chloride, had a 90% Upper Concentration Limit (UCL_{90}) value that was above its program required quantitation limit (PRQL).

- Four VOCs—acetone, 1,1,2-trichloro-1,2,2-trifluoroethane, methyl ethyl ketone, and toluene—had UCL_{90} values below the PRQL but were present in at least one drum at a concentration above the PRQL.

- One VOC (methanol) had a mean concentration above its Method Detection Limit (MDL) but no concentrations above the PRQL.

12

merge 2 cells

Table ~~10~~. Headspace Gas Data for Target Analytes in Waste Stream TA-55-19

switch rows to keep in alphabetical order

ANALYTE	MDL, ppmv	PRQL, ppmv	No. of Samples analyzed	No. of samples above MDL	No. of samples above PRQL	VOC concentrations, in ppmv			~~Applicable~~ EPA HWN	
						Mean	UCL_{90}*	Maximum	~~Based on~~ HGAS data	assigned ~~Based on~~ AK
Benzene	1.96	10	55	4	0	1.2	1.8	5	—	F005, D018
Bromoform	2.27	10	55	0	0	1.1	1.1	—	—	—
Carbon Tetrachloride	2.00	10	55	1	0	1.0	1.0	3	—	D019
Chlorobenzene	1.93	10	55	1	0	1.0	1.0	2	—	F002, D021
Chloroform	1.85	10	55	4	0	1.0	1.4	3	—	D022
1,1-Dichloroethane	1.78	10	55	2	0	1.0	1.9	4	—	—
1,2-Dichloroethane	2.40	10	55	0	0	1.2	1.2	—	—	—
1,1-Dichloroethene	2.74	10	55	0	0	1.4	1.4	—	—	—
Cis-1,2-Dichloroethylene	2.06	10	55	0	0	1.0	1.0	—	—	—
Ethyl Ether	1.30	10	55	0	0	0.65	0.65	—	—	F003
Ethyl Benzene	1.72	10	55	0	0	0.9	0.9	—	—	F003
Methylene Chloride	1.97	10	55	11	8	8.7	18.1	100	F002	F002
1,1,2,2-Tetrachloroethane	1.62	10	55	0	0	0.8	0.8	—	—	—
Tetrachloroethene	1.44	10	55	0	0	0.7	0.7	—	—	F002, D039
Toluene	1.67	10	55	33	11	6.5	8.5	51	—	F005
1,1,2-Trichloro 1,2,2-trifluoroethane (Freon-113)	1.79	10	55	1	1	1.7	1.7	44	—	F002
1,1,1-Trichloroethane	1.82	10	55	1	0	1.0	1.0	4	—	—
Trichloroethene	1.31	10	55	0	0	0.7	0.7	6.0	—	F002, D040
m-Xylene and p-xylene	3.62	10	55	0	0	1.8	1.8	—	—	F003
o-Xylene	1.90	10	55	0	0	0.95	0.95	—	—	F003
Acetone	16.12	100	55	31	13	69.7	91.2	410	—	F003
Butanol	8.78	100	55	1	0	4.8	4.8	29	—	F003
Methanol	11.42	100	55	10	0	14.6	24.3	84	—	F003
Methyl ethyl ketone	18.42	100	55	4	0	10.1	12.6	23	—	F005, D035
Methyl isobutyl ketone	16.05	100	55	0	0	8.0	8.0	—	—	—

Source: TWCP-4722; VOC target analyte list for debris waste from WIPP WAP, Table B3-2.

ppmv, part per million by volume; MDL, Method Detection Limit; UCL90, 90% Upper Concentration Limit

— Not applicable

* For samples with concentrations below the MDL, UCL_{90} concentrations are calculated by assuming concentrations were half of the MDL values as determined in the MDL study dated 6/19/00 (TWCP-3248).

Delete this column

- Seven VOCs had mean concentrations below their MDL, but were present in at least one drum at a concentration above the MDL.
- All other target analyte VOCs were below the MDL.
- No Tentatively Identified Compounds (TICs) were detected.

These results are consistent with AK information summarized in this waste stream report, insofar as all of the VOCs that were detected are known to have been present in TA-55 operations. The data confirm that assignment of these HWNs based on AK information is conservative.

Table 11 summarizes concentrations of potentially flammable VOCs, hydrogen, and methane for headspace gas samples from the same 55 containers as are included in Table 10. All were below the WAC limits. The average concentration of potentially flammable VOCs for this set of 55 drums was 128 ±101 ppm ppmv, with a maximum of 473 ppm (TWCP-4722). No methane was detected in any of the drums, and hydrogen concentrations were lower by more than an order of magnitude than the WAC limit of 5 percent.

In conclusion, the headspace gas data confirm the presence of VOCs in waste stream TA-55-19; no VOCs were present which were not expected based on AK. However, no correlation is seen between the presence and absence of a specific VOC and its documented use in a process known to have contributed waste placed in a particular drum. For example, about 60 percent of the containers show measurable concentrations of acetone and/or toluene in the headspace gas, and 20 percent contain methylene chloride, but less than half of the drums in which these chemicals are present contain waste items generated by activities that were known to have used these chemicals. Radiolytic production of VOCs is a possible explanation, but additional AK investigation is needed to verify that a waste generator source of these VOCs has not been overlooked.

15.0 CITED PROCEDURES AND REQUIREMENTS DOCUMENTS

- 40 CFR Part 261—Identification and Listing of Hazardous Wastes
- 49 CFR Subpart C—Segregation and separation chart of hazardous materials. Section 177.848, Segregation of hazardous materials
- Nonconformance Reporting and Tracking (TWCP-QP-1.1-007)
- *Transuranic Package Transporter (TRUPACT)-II Content Codes* (DOE/WIPP-89-004)
- Acceptable Knowledge Documentation, (TWCP-QP-1.1-021)
- Reconciliation of Visual Examination and Radiography Information (TWCP-QP-1.1-028)

italics

ital.

Table ~~V~~ 13. Headspace Gas Data For Flammable VOCs, Hydrogen and Methane in Waste Stream TA-55-19

Gas

ANALYTE	Lower Explosive Limit (LEL)	No. of Samples analyzed	No. of samples above MDL	Maximum measured concentration (ppmv)	Evidence for presence of gas in waste	
					~~HGAS~~ data	AK
Acetone	2.5%	55	31	410	X	X
Benzene	1.2%	55	4	5	X	X
Butanol	1.4%	55	1	29	X	X
Chlorobenzene	1.3%	55	1	2	X	X
Cyclohexane	1.3%	55	0	—	—	—
1,1-Dichloroethane	5.4%	55	2	4	X	—
1,2-Dichloroethane	6.2%	55	0	—	—	—
1,1-Dichloroethene	6.5%	55	0	—	—	X
Cis-1,2-Dichloroethylene	5.6%	55	0	—	—	—
Ethyl Ether	1.9%	55	0	—	—	X
Ethyl Benzene	0.8%	55	0	—	—	X
Methanol	6.0%	55	10	84	X	X
Methyl ethyl ketone	1.4% at 200 °F	55	4	23	X	X
Methyl isobutyl ketone	1.2% at 200 °F	55	0	—	—	—
Toluene	1.1%	55	33	51	X	X
1,3,5-Trimethylbenzene	Not known	55	0	—	—	—
1,2,4-Trimethylbenzene	0.9%	55	0	—	—	—
m-Xylene and p-xylene	1.1%	55	0	—	—	X
o-Xylene	0.9%	55	0	—	—	X
Total potentially flammable VOCs in a single container*	—	**55**	—	**473**	**X**	**X**
Hydrogen*	4%	55	32	0.38%	X	X
Methane*	5.3%	55	0	—	—	X

Switch rows

Source: TWCP-4722

ppmv, part per million by volume; MDL, Method Detection Limit

LEL, Lower explosive (flammable) limit in air, % by volume (at room temperature); data from NIOSH Pocket Guide to Chemical Hazards (TWCP-____)

— Not applicable or not ~~detected~~

* WAC requirements state that a waste container cannot be shipped if its headspace gas concentration exceeds 500 ppm for total flammable VOCs, 5% for hydrogen, or 500 ppm for methane concentration.

** The average flammable VOC concentration is 128 ±101 ppm (TWCP-4722). Gases that were below detection are taken into account in this calculation by assuming they are present at concentrations that are equal to half of the MDL values

- *Waste Analysis Plan, to the Hazardous Waste Facility Permit Issued to the Waste Isolation Pilot Plant* (EPA No. NM4890139088, Attachment B)
- *Waste Characterization Data Reconciliation with Acceptable Knowledge* (TWCP-DTP-1.2-064)
- Waste Analysis at Facilities that Generate, Treat, Store and Dispose of Hazardous Waste (EPA)

Don't know full reference. Delete sentence from text (page 1) if we can't find it. Check QP-21 references

ACCEPTABLE KNOWLEDGE ROADMAP

Add 5 NCRs from section 14.3

Waste Stream: TA-55-19 and TA-55-20.

Documents are in the TWCP RMDC Center.

TWCP Record No.	Information Category Code	Information	Source	Summary	Limitations
TWCP-	A	Reconciliation between AK, VE and RTR data for drum from waste stream TA-55-20 (per Sampling Plan, R3)	LA00-3.4.1-005	VE, AK and RTR data on WMC, number and types of packaging layers, TRUCON code, and waste items in drum	VE batch data report still in Project-level review
TWCP-	A	Reconciliation between AK, VE and RTR data for drum from waste stream TA-55-19 (per Sampling Plan, R3	LA00-3.4.1-006	VE, AK and RTR data on WMC, number and types of packaging layers, TRUCON code, and waste items in drum	VE batch data report still in Project-level review
TWCP-	A	Reconciliation between AK, VE and RTR data for drum from waste stream TA-55-19 (per Sampling Plan, R3)	LA01-VE-001	VE, AK and RTR data on WMC, number and types of packaging layers, TRUCON code, and waste items in drum	VE batch data report still in Project-level review
TWCP-	A	Reconciliation between AK, VE and RTR data for drum from waste stream TA-55-19 (per Sampling Plan, R3)	LA01-VE-002	VE, AK and RTR data on WMC, number and types of packaging layers, TRUCON code, and waste items in drum	VE batch data report still in Project-level review
TWCP-	A	Reconciliation between AK, VE and RTR data for drum from waste stream TA-55-19 (per Sampling Plan, R3)	LA01-VE-004	VE, AK and RTR data on WMC, number and types of packaging layers, TRUCON code, and waste items in drum	VE batch data report still in Project-level review
TWCP-	A	Reconciliation between AK, VE and RTR data for drum from waste stream TA-55-19 (per Sampling Plan, R3)	LA01-VE-005	VE, AK and RTR data on WMC, number and types of packaging layers, TRUCON code, and waste items in drum	VE batch data report still in Project-level review
TWCP-	A	Reconciliation between AK, VE and RTR data for drum from waste stream TA-55-20 (per Sampling Plan, R3)	LA00-3.4.1-003	VE, AK and RTR data on WMC, number and types of packaging layers, TRUCON code, and waste items in drum	VE batch data report still in Project-level review

* Information Category Codes: A = forms intended for use in waste certification, B = data from controlled databases and published documents, C = unpublished data, and D = interviews, memos, and letters

TWCP Record No.	Information Category Code	Information	Source	Summary	Limitations
TWCP-882 (UCNI)	D	Secondary Radionuclides and Toxic Metals in TA-55 TRU Waste	Memo from Jim Foxx	Lists additional radionuclides and metals potentially in waste, subdivided by P/S code. Covers time period from 1978 to present.	Best information available, but it is based on worker recollection because other records are not available.
TWCP-886	C	Color Flow Diagram of Pu-processes at TA-55.	Diagram from Jim Foxx	Indicates that process inputs are thermally treated and that heavy metals from process inputs end up in the nitric acid evaporator bottoms.	Does not indicate solvent input to processes.
TWCP-887	D	Co-mingling of Defense and Non-Defense TRU Waste	Memo from Jim Foxx	Wastes generated from defense and non-defense activities were not segregated at TA-55 through 1997	None
TWCP-2130	D	Estimate of the minimum detection limit for Am-243, Np-237, Pa-231, and Th-232 for FRAM analyses	Criteria for reporting Am-243, Np-237, Pa-231, and Th-232 on mobile PAN radioassay data sheets	If the error in the peak area for the isotopes Am-243, Np-237, Pa-231, and Th-232 is greater than 21.5% in the FRAM report, than that isotope is considered to be below the minimum detectable activity.	Memo refers specifically to PAN radioassay data, but the same reasoning is ~~assumed to apply~~ applies to TGS and HENC assay data as well, ~~Memo only~~ and to all radionuclides detectable by FRAM.
TWCP-2501	B	"Backlog Waste Reassessment Baseline Book, Waste Form 34"	Rocky Flats Environmental Technology Site Report 1995	Page WF34-10 contains results of tests for corrosivity	Tests are on residues rather than waste that is lower in Pu content; hence, they are conservative.
TWCP-3248	C	Method Detection Limits for Headspace Gas Analyses	MDL studies with data	MDL values for VOCs, determined 06/19/00	Different MDL values would have been in effect at the times that the data included in Table 6 of this AK report were acquired, so the MDL values should only be considered as an approximate guide.
TWCP-3547/ Cl-25 (UCNI)	D	Answers to questions about chloride processes	Interview with Jim Foxx, 9/23/99	Answers to questions on Chloride processes; CLS-1 solvent list	None

* Information Category Codes: A = forms intended for use in waste certification, B = data from controlled databases and published documents, C = unpublished data, and D = interviews, memos, and letters

TWCP Record No.	Information Category Code	Information	Source	Summary	Limitations
TWCP-4570	A	RTR data for drums from waste stream TA-55-19 or TA-55-20	LA00-RTR-022	RTR data on prohibited items, WMC, packaging layers, and estimated volumes and weights of waste material parameters in drum	Sampling plan (Rev 3) referenced in this batch data report may not be up-to-date with respect to waste stream assignments for containers
TWCP-4572	A	RTR data for drums from waste stream TA-55-19 or TA-55-20	LA01-RTR-003	RTR data on prohibited items, WMC, packaging layers, and estimated volumes and weights of waste material parameters in drum	Sampling plan (Rev 3) referenced in this batch data report may not be up-to-date with respect to waste stream assignments for containers
TWCP-4573	A	RTR data for drums from waste stream TA-55-19 or TA-55-20	LA00-RTR-026	RTR data on prohibited items, WMC, packaging layers, and estimated volumes and weights of waste material parameters in drum	Sampling plan (Rev 3) referenced in this batch data report may not be up-to-date with respect to waste stream assignments for containers
TWCP-4574	A	RTR data for drums from waste stream TA-55-19 or TA-55-20	LA00-RTR-027	RTR data on prohibited items, WMC, packaging layers, and estimated volumes and weights of waste material parameters in drum	Sampling plan (Rev 3) referenced in this batch data report may not be up-to-date with respect to waste stream assignments for containers
TWCP-4577	A	RTR data for drums from waste stream TA-55-19 or TA-55-20	LA00-RTR-028	RTR data on prohibited items, WMC, packaging layers, and estimated volumes and weights of waste material parameters in drum	Sampling plan (Rev 3) referenced in this batch data report may not be up-to-date with respect to waste stream assignments for containers
TWCP-4720	B	Describes the procedure to be taken at TA-55 in the event of a misfire or unconsumed explosives (from the Impact Test Facility 40-mm gun, P/S codes ITF and ITF4) to ensure that explosives do not enter the waste stream	40-mm Powder Breech Project Waste Management Plan, Rev. 2 (issued march 27, 2000) u.c.	Procedure to be taken at TA-55 in the event of a misfire or unconsumed explosives (from the Impact Test Facility 40-mm gun) to ensure that explosives do not enter the waste stream	Does not appear to be a controlled document. Without revision history, cannot tell when this document was first issued, and how the potential for unconsumed explosives was addressed when the Impact Test Facility (ITF) began in 1996
TWCP-4721	A	RTR data for drums from waste stream TA-55-19 or TA-55-20	LA00-RTR-003	RTR data on prohibited items, WMC, packaging layers, and estimated volumes and weights of waste material parameters in drum	Sampling plan (Rev 3) referenced in this batch data report may not be up-to-date with respect to waste stream assignments for containers.

* Information Category Codes: A = forms intended for use in waste certification, B = data from controlled databases and published documents, C = unpublished data, and D = interviews, memos, and letters

Record TWCP-5086 | Code B | Information P/S codes for TA-55 waste items, listed by drum | Source [see record cover page] | Summary P/S codes for drums that underwent VE | Limitations Only some drums are included

TWCP Record No.	Information Category Code	Information	Source	Summary	Limitations
TWCP-4835	A	RTR data for drums from waste stream TA-55-19 or TA-55-20	LA00-RTR-001	RTR data on prohibited items, WMC, packaging layers, and estimated volumes and weights of waste material parameters in drum	Sampling plan (Rev 3) referenced in this batch data report may not be up-to-date with respect to waste stream assignments for containers
TWCP-AK-2.1-002,R.2	A	*Process Acceptable Knowledge Summary Report for Chloride Operations at TA-55*	Generators interview and TWCP AK references	Detailed information on each P/S code for chloride operations at TA-55	None
TWCP-AK-2.1-003,R.2	A	*Process Acceptable Knowledge Summary Report for Metal Operations at TA-55*	Generators interview and TWCP AK references	Detailed information on each P/S code for metal operations at TA-55	None
TWCP-AK-2.1-004,R.2	A	*Process Acceptable Knowledge Summary Report for Miscellaneous Operations at TA-55*	Generators interview and TWCP AK references	Detailed information on each P/S code for miscellaneous operations at TA-55	None
TWCP-AK-2.1-005,R.2	A	*Process Acceptable Knowledge Summary Report for Nitrate Operations at TA-55*	Generators interview and TWCP AK references	Detailed information on each P/S code for nitrate operations at TA-55	None
TWCP-AK-2.1-006,R.2	A	*Process Acceptable Knowledge Summary Report for Pyrochemcial Processes at TA-55*	Generators interview and TWCP AK references	Detailed information on each P/S code for pyrochemical processes at TA-55	None
TWCP-AK-2.1-007,R.2	A	*Process Acceptable Knowledge Summary Report for Special Processing Operations at TA-55*	Generators interview and TWCP AK references	Detailed information on each P/S code for special processing operations at TA-55	None
TWCP-PLAN-0.2.7-001,R.3	C	*Los Alamos National Laboratory Transuranic Waste Characterization Sampling Plan*	LANL TA-55 waste management database, LANL TA-54 TRU waste management database, and TWCP AK references based on generator's original data	Detailed information on each waste drum and waste stream	~~None~~ Reliability and completeness of waste generator data is highly variable

reverse cell entries?

* Information Category Codes: A = forms intended for use in waste certification, B = data from controlled databases and published documents, C = unpublished data, and D = interviews, memos, and letters

SIMPLIFIED PROCESS FLOW DIAGRAM FOR MISCELLANEOUS OPERATIONS

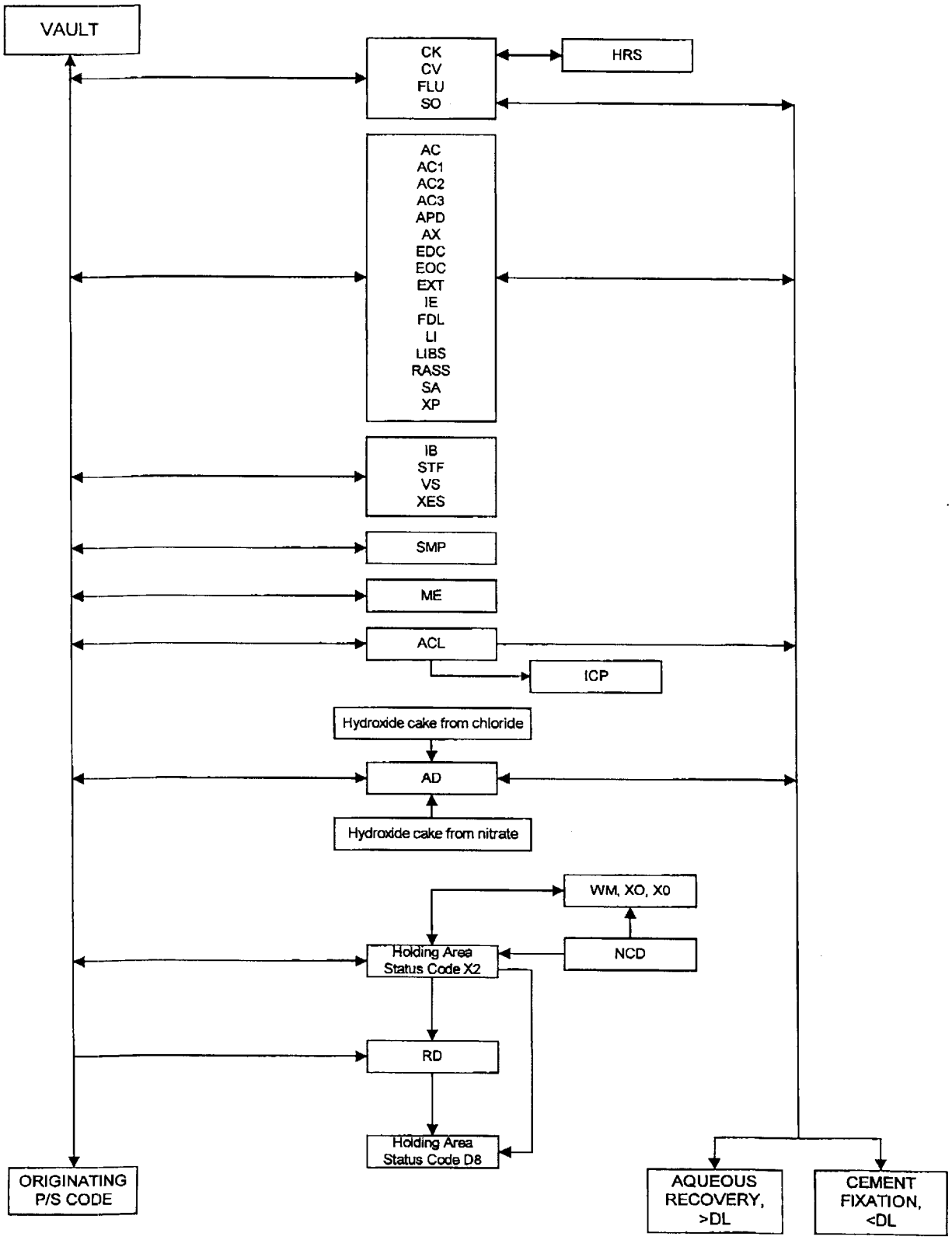

~~GENERALIZED~~ SIMPLIFIED PROCESS ~~STATUS~~ FLOW DIAGRAM FOR NITRATE ~~PROCESSES~~ OPERATIONS

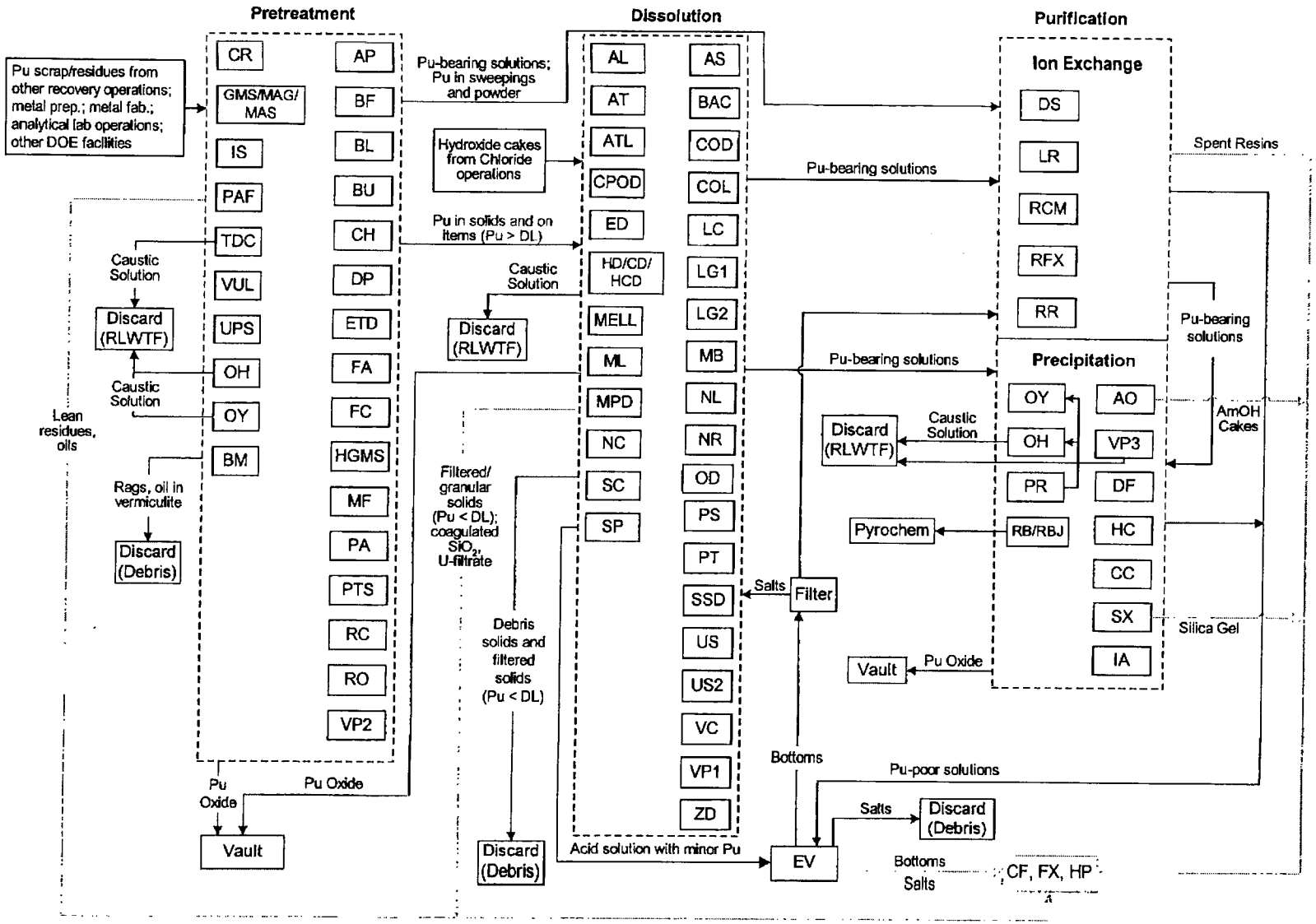

SIMPLIFIED PROCESS ~~STATUS~~ FLOW DIAGRAM
FOR PYROCHEMICAL PROCESSES

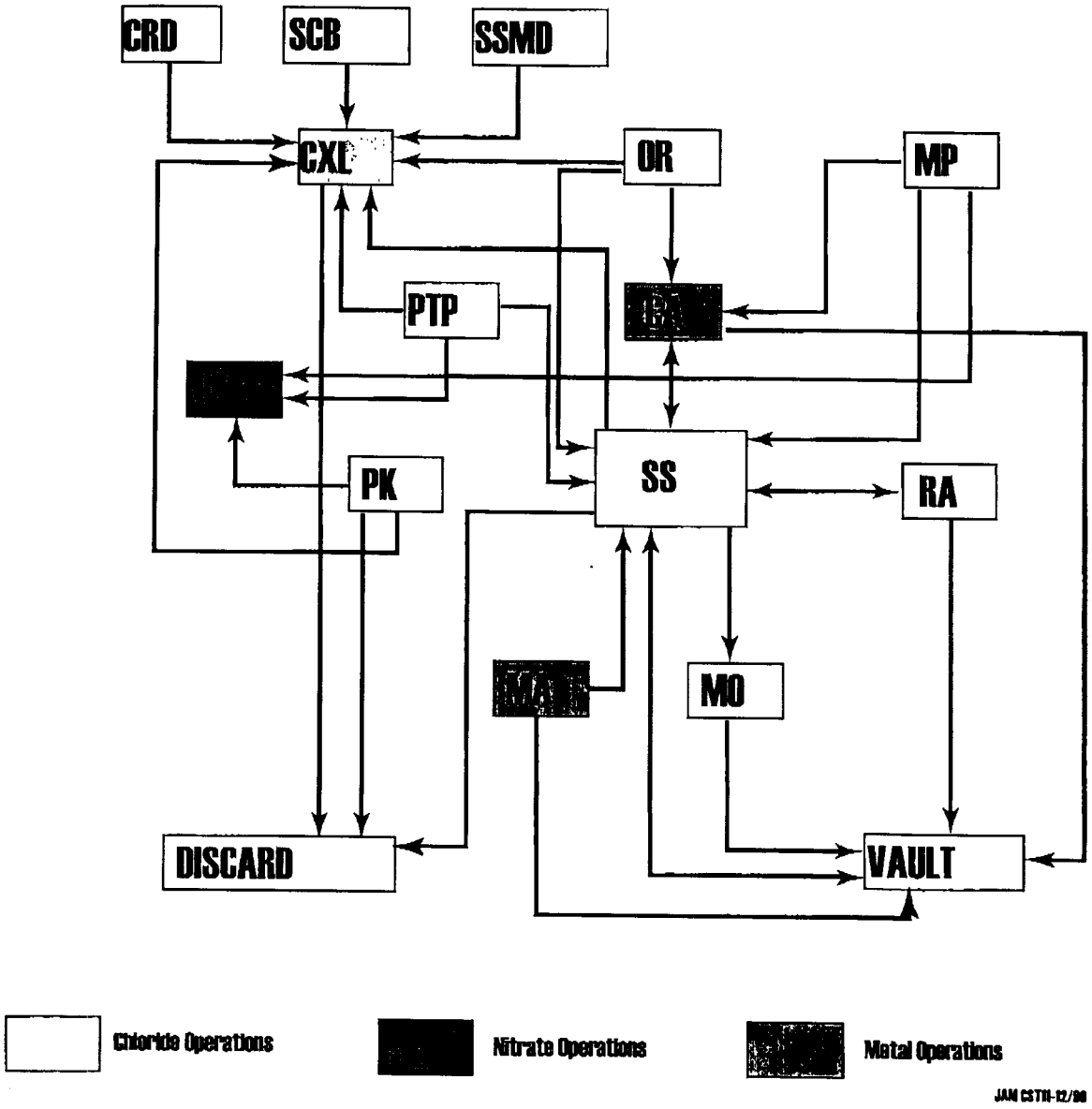

NCR Info. + Summary columns:
Drum in TA-55-19 waste stream contained ... [p. 5]

ACCEPTABLE KNOWLEDGE ROADMAP

Waste Stream: TA-55-19 and TA-55-20.

Documents are in the TWCP RMDC Center.

Limitation: NCR cannot be closed until S.

TWCP Record No.	Information Category Code	Information	Source	Summary	Limitations
TWCP-	A	Reconciliation between AK, VE and RTR data for drum from waste stream TA-55-20 (per Sampling Plan, R3)	LA00-3.4.1-005	VE, AK and RTR data on WMC, number and types of packaging layers, TRUCON code, and waste items in drum	VE batch data report still in Project-level review
TWCP-	A	Reconciliation between AK, VE and RTR data for drum from waste stream TA-55-19 (per Sampling Plan, R3	LA00-3.4.1-006	VE, AK and RTR data on WMC, number and types of packaging layers, TRUCON code, and waste items in drum	VE batch data report still in Project-level review
TWCP-	A	Reconciliation between AK, VE and RTR data for drum from waste stream TA-55-19 (per Sampling Plan, R3)	LA01-VE-001	VE, AK and RTR data on WMC, number and types of packaging layers, TRUCON code, and waste items in drum	VE batch data report still in Project-level review
TWCP-	A	Reconciliation between AK, VE and RTR data for drum from waste stream TA-55-19 (per Sampling Plan, R3)	LA01-VE-002	VE, AK and RTR data on WMC, number and types of packaging layers, TRUCON code, and waste items in drum	VE batch data report still in Project-level review
TWCP-	A	Reconciliation between AK, VE and RTR data for drum from waste stream TA-55-19 (per Sampling Plan, R3)	LA01-VE-004	VE, AK and RTR data on WMC, number and types of packaging layers, TRUCON code, and waste items in drum	VE batch data report still in Project-level review
TWCP-	A	Reconciliation between AK, VE and RTR data for drum from waste stream TA-55-19 (per Sampling Plan, R3)	LA01-VE-005	VE, AK and RTR data on WMC, number and types of packaging layers, TRUCON code, and waste items in drum	VE batch data report still in Project-level review
TWCP-	A	Reconciliation between AK, VE and RTR data for drum from waste stream TA-55-20 (per Sampling Plan, R3)	LA00-3.4.1-003	VE, AK and RTR data on WMC, number and types of packaging layers, TRUCON code, and waste items in drum	VE batch data report still in Project-level review

* Information Category Codes: A = forms intended for use in waste certification, B = data from controlled databases and published documents, C = unpublished data, and D = interviews, memos, and letters

X-Sender: 094282@empo.lanl.gov
X-Mailer: QUALCOMM Windows Eudora Version 5.0
Date: Tue, 10 Apr 2001 19:37:52 -0600
To: John Musgrave <jmusgrave@lanl.gov>, cfoxx@lanl.gov
From: June Fabryka-Martin <fabryka@lanl.gov>
Subject: Re: Cm-244 and Pa-231
Cc: Louise@lanl.gov
X-RCPT-TO: <107695@empo.lanl.gov>

Thanks, that was very timely input. What do you think of adding the following wording to section 3.6.2 (Radionuclide Contect Identification), starting by appending Pa-231 and Cs-137 as bullets to the list of radioactive contaminants expected to be present in Pu waste:
******
New text:

- Protactinium (Pa)-231, the alpha-decay daughter of U-235, is expected to be present in trace amounts in some TA-55 wastes due to its widespread presence as a contaminant in some TA-55 operations.

- Cesium (Cs)-137, a fission product of U-235, is expected to be present at detectable levels in some TA-55 wastes due to its widespread presence as a contaminant in some TA-55 operations.

Although they are products of U-235 fission and decay, Cs-137 and Pa-231 are not expected to show any correlation with U-235 concentrations, or even with the presence or absence of this isotope. The differences in valence states and chemical affinities among these elements is expected to result in substantial fractionation during several TA-55 processes, including ion exchange, solvent extraction, hydroxide precipitation, dissolution, and exposure to very high temperatures.

In addition, secondary radionuclides will be present in the waste due to processing of feed materials other than Pu (TWCP-698). Additional radionuclides expected to be present in each process were reviewed by a panel of experts at TA-55 and compiled in a memo according to P/S code (TWCP-882), as summarized in Table 4. This list includes Am-241, Am-243, cerium (Ce)-144, curium (Cm)-244, Np-237, Pa-231, Pu-238, Th-230, Th-232, U-233, U-235, and U-238.

The possible presence of Cm-244 in TRU waste is of particular interest to radioassay operations because it can affect the choice of radioassay procedure to use for optimal results. Cm-244 was introduced in TA-55 operations in P/S code DOP, which started in 1988. Material outputs from this process sometimes were sent to P/S codes IS or WE. Cm-244 could also be part of debris waste under P/S code CA because both operations took place in the 300 area. Because only one room in this area is available for bagouts, all TRU waste from the 300 area gets combined. In addition, because rags from DOP were sent to IS, Cm-244 could be present in the ash produced by this operation, which is then processed through nitrate aqueous recovery operations. Some unknown fraction of the Cm-244 could ultimately end up in the evaporator bottoms, which are then immobilized in cement in P/S code CF. In any case, however, Cm-244 is not expected to be present in any waste generated before 1988.

At 04:06 PM 4/10/2001 -0600, you wrote:
June,

I was talking with Jim Foxx about the Cm-244 and Pa-231 issues. Jim said that there are a couple of other P/S codes where Cm-244 may appear. It may be part of debris trash under P/S code CA because DOP took place in Rm 319 and casting ops are in Rms 315, 317 and 327, and there is only one room in the 300 area where bagouts are done. Hence, all the trash from the 300 area gets combined. The other issue is if rags from DOP were sent to IS, this begs the question what happened to the Cm-244 that was then a component of the ash? It would, of course, go through nitrate aqueous recovery and ultimately end up in the evaporator bottoms - cemented, of course. So, CF may show some Cm-244.

Pa may be chemically fractionated from U during ion exhange. In addition, there may be enough of a difference in solubility between Pa and U oxalates that there is further separation. Jim and I aren't up on the solubilities of these oxalates, but if this issue warrants further investigation, we can dig deeper.

John

****

June Fabryka-Martin
TRU Waste Characterization/Certification Program (TWCP)
Environmental Technology Group (Group E-ET)
Mail Stop E517
Los Alamos National Laboratory
Los Alamos, NM 87545
Phone (505) 665-2300
FAX (505) 667-3326

Edit Round #5 JM 4/5/01

TA-55 PLUTONIUM FACILITY
ACCEPTABLE KNOWLEDGE REPORT

REPORT TITLE: Acceptable Knowledge Summary Report for Waste Streams TA-55-19 and TA-55-20

REPORT NUMBER: TWCP-AK-2.1-008,R.2 (LA-UR-00-5727)

WASTE GENERATED FROM WASTE STREAMS: TA-55-19, Lot TA-55-19A, and TA-55-20

EFFECTIVE DATE: _____

NEXT REVIEW DATE: _____

DOCUMENT PREPARER:

_____ _____
NAME DATE

APPROVALS:

_____ _____
INDEPENDENT TECHNICAL REVIEWER/EDITOR DATE

_____ _____
SITE PROJECT MANAGER DATE

_____ _____
WASTE CERTIFICATION OFFICIAL DATE

_____ _____
SITE PROJECT QA OFFICER DATE

_____ _____
FACILITY REPRESENTATIVE DATE

© 2000, 2001 University of California

CONTENTS

Section **Page**

ACRONYMS v

TA-55 PROCESS/STATUS CODE INDEX vii

ACCEPTABLE KNOWLEDGE SUMMARY xv

WASTE GENERATION SUMMARY DIAGRAM xviii

1.0 INTRODUCTION 1

2.0 METHODOLOGY USED TO SEARCH FOR AK RECORDS 1

3.0 DESCRIPTION OF THE WASTE STREAM 3
- 3.1 Facility and Mission 3
- 3.2 Basis, Rationale, and Assumptions Used to Delineate the Waste Streams 3
- 3.3 Waste Physical Form and Content Description 4
- 3.4 Waste Volume and Time Period of Waste Generation 4
- 3.5 Waste Stream Generation Processes 4
- 3.6 Material Inputs to the Waste Generation Processes 18

4.0 DIVISION OF THE WASTE STREAM INTO LOTS 31

5.0 CORRELATIONS BETWEEN WASTE STREAMS 31

6.0 ASSIGNMENT OF WASTE MATRIX CODES 31

7.0 ASSIGNMENT OF WASTE MATERIAL PARAMETER CODES 33

8.0 ASSIGNMENT OF EPA HAZARDOUS WASTE NUMBERS 34
- 8.1 F, K, P, and U Listings 34
- 8.2 Toxicity Listings 35

9.0 VERIFICATION THAT IGNITABLE, REACTIVE, AND CORROSIVE WASTES WERE EXCLUDED 40

line spacing

10.0 VERIFICATION THAT INCOMPATIBLE CHEMICALS WERE PROHIBITED 41

11.0 VERIFICATION THAT THERE ARE NO COMPRESSED GASES, FREE LIQUIDS, NONRADIONUCLIDE PYROPHORICS, SEALED CONTAINERS GREATER THAN FOUR LITERS IN VOLUME, OR >1% RADIONUCLIDE PYROPHORICS 41

12.0 VERIFICATION THAT THERE ARE NO POLYCHLORINATED BIPHENYLS (PCBs) IN THE WASTE STREAM 42

13.0 DETERMINATION OF THE MAXIMUM NUMBER OF CONFINEMENT LAYERS PERMITTED FOR WASTE PACKAGING 43

14.0 CONFIRMATION OF AK INFORMATION FOR THE WASTE STREAM .....

15.0 CITED PROCEDURES AND REQUIREMENTS DOCUMENTS 45

Tables

Page

1 Feed Materials for Processes Contributing to Waste Streams TA-55-19 and TA-55-20 19

2 Average Isotopic Content of Plutonium Material Types and Enrichments 23

missing 3 Average Isotopic Content of Uranium Material Types and Enrichments ~~(Weight %)~~ 23

4 Use of RCRA-Regulated Inorganic Chemicals in TA-55 Processes 30

5 Use of RCRA-Regulated Organic Chemicals in TA-55 Processes 32

6 Maximum Layers of Confinement for be Used for TA-55-19 and TA-55-20 Waste Containers in the Absence of More Specific Waste Characterization Data 44

~~7 Preliminary Headspace Gas Data For 60 Drums Assigned To Waste Stream TA-55-19 ..... 36~~

Attachments

1 Acceptable Knowledge Roadmap (11 pages)

2 LANL and TA-55 Site Maps (2 pages)

3 Simplified Process Flow Diagrams (8 pages)

4 TRU Waste Forms (5 pages)

5 Chemical Waste Disposal Request Form (1 page)

7. RTR data for waste streams TA-55-19 and TA-55-20

8 VE data " " " " " "

9 Radio assay data " " " " "

10 Headspace gas data for target analytes in waste stream TA-55-~~20~~ 19

11 Headspace gas data for flammable VOCs, Hydrogen and methane in waste stream TA-55-19

ACRONYMS

AK	acceptable knowledge
ARIES	Advanced Recovery and Integrated Extraction System
CFR	*Code of Federal Regulations*
CMPO	octylphenyldiisobutylcarbamoylmethylphosphine oxide
C–N–O	carbon–nitrogen–oxygen
CSMO	Central Scrap Management Office
DBBP	dibutyl butylphosphonate
DCHP	dicesium hexachloroplutonate
DHDCMP	dihexyl N,N-diethylcarbamoylmethyl phosphonate
DL	discard limit
DOE	U.S. Department of Energy
DOR	direct oxide reduction
DTP	detailed technical procedure
DWLS	Discardable Waste Log Sheet
EPA	U.S. Environmental Protection Agency
F	RCRA hazardous waste number prefix for hazardous wastes from non-specific sources, defined in 40 CFR Subpart D, Section 261.31
FOOF	dioxygen difluoride
HEPA	high-efficiency particulate air
HWN	hazardous waste number
ID	item identification
IDC	item description code
K	RCRA hazardous waste number prefix for hazardous wastes from specific sources, defined in 40 CFR Subpart D, Section 261.32
LANL	Los Alamos National Laboratory
LLW	low-level waste
MCDOR	multicycle direct oxide reduction
MEGAS	Multiple Energy Gamma Assay System
MT	material type
NDA	nondestructive assay
NMT	Nuclear Material Technology
P	RCRA hazardous waste number prefix for acute hazardous waste defined in 40 CFR Subpart D, Section 261.33
PCB	polychlorinated biphenyl
PF	Plutonium Facility
PRQL	program required quantitation limit
P/S	process/status [code]
PuBe	plutonium–beryllium
QA	quality assurance
QP	quality procedure
R&D	research and development
RD&D	research, development, and demonstration
RCRA	Resource Conservation and Recovery Act

RFETS	Rocky Flats Environmental Technology Site
RLWTF	Radioactive Liquid Waste Treatment Facility
RMDC	Records Management/Document Control
RSWD	radioactive solid waste disposal
RTR — Sampling Plan	real-time radiography *Los Alamos National Laboratory Transuranic Waste Characterization Sampling Plan* (TWCP-PLAN-0.2.7-001,R.3)
SME	subject matter expert
SOP	safe operating procedure
TA	technical area
Th — TBP	tributyl phosphate Chemical Symbol for thorium
TOPO	trioctylphosphine oxide
TRU	transuranic
TRUCON	TRUPACT-II Content Code
TRUPACT-II	Transuranic Waste Transporter-Model II
TWBIR	Transuranic Waste Baseline Inventory Report
TWCP	Transuranic Waste Characterization/Certification Project
U (Chemical symbol for Uranium; or)	RCRA hazardous waste number prefix for toxic waste defined in 40 CFR Subpart D, Section 261.33(f)
UCNI — VE	unclassified controlled nuclear information
VOC	volatile organic compound — Visual examination
WAC	Waste Acceptance Criteria
WIPP	Waste Isolation Pilot Plant
WIPP WAP	Attachment B, Waste Analysis Plan, to the *Hazardous Waste Facility Permit Issued to the Waste Isolation Pilot Plant* (EPA No. NM4890139088)
WODF	Waste Origination and Disposition Form
WPRF	Waste Profile Request form
XES	

page 13

UCL_{90} 90% Upper Concentration Limit

TA-55 PROCESS/STATUS CODE INDEX

P/S Code	P/S Name	AK Process Report and Primary Report Section in which P/S Code is Described*		RCRA Listings for Combustible Debris
AC	Actinide chemistry, R&D	Miscellaneous Operations	3.4.3, Att. 4	D007, D009, D011, D018, D022, D038, F002, F005
AC1	Actinide chemistry, R&D	Miscellaneous Operations	3.4.3, Att. 4	D007, D009, D011, D018, D022, F002, F005
AC2	Actinide chemistry, R&D	Miscellaneous Operations	3.4.3, Att. 4	D007, D009, D011, D018, D022, D038, F002, F005
AC3	Actinide chemistry, R&D	Miscellaneous Operations	3.4.3, Att. 4	
ACC	Ammonium chloride conversion	Special Processing	3.4.8, Att. 4	
ACD	Cascade dissolver	Special Processing	3.4.1, Att. 4	D005, D006, D007, D008, D011
ACL	Analytical chemistry laboratory	Miscellaneous Operations	3.4.4, Att. 4	D007, D009
AD	Actinide processing demonstration	Miscellaneous Operations	3.4.1, Att. 4	D004, D005, D006, D007, D008, D009, D010, D011, D019, D039, F002, F003
AL	Ash leach	Nitrate Operations	3.4.2, Att. 4	D005, D006, D007, D008, D011
AO	Assembly operation	Metal Operation Processes	3.4.3, Att. 4	
AO	Americium processing calcination	Nitrate Operations	3.4.3, 3.4.6, Att. 4	
AP	Americium purification	Nitrate Operations	3.4.3, 3.4.6, Att. 4	D007, D009
APD	Actinide processing demonstration	Miscellaneous Operations	3.4.7, Att. 4	D007, D008, D009, D019, D021, D022, D039, F002, F003
ARI	ARIES	Metal Operation Processes	3.4.3, Att. 4	
AS	Anode heel dissolution	Nitrate Operations	3.4.2, 3.4.6, Att. 4	D006, D007, D008, D011
AT	Ash testing	Nitrate Operations	3.4.2, Att. 4	D005, D006, D007, D008, D011
ATL	Advanced test line for actinide separation RD&D	Nitrate Operations	3.4.2, Att. 4	D005, D006, D007, D008, D011
AX	Solution assay	Miscellaneous Operations	3.4.3, Att. 4	D007, D009
BA	Basement isopress	Metal Operation Processes	3.4.2, Att. 4	
BAC	Bacterial decomposition of cellulose items	Nitrate Operations	3.4.2, 3.4.6, Att. 4	
BC	Physical properties	Metal Operation Processes	3.4.2, Att. 4	
BF	Unknown name for P/S code	Nitrate Operations	3.4.6, Att. 4	D006, D007, D008, D011

ACCEPTABLE KNOWLEDGE SUMMARY FOR TA-55-19

Waste Stream Number and Title:	TA-55-19, Mixed Combustible Debris Waste
Summary Category Group:	S5000
Waste Matrix Code and Description:	S5300
TWBIR:	LA-M16
TRUCON Codes:	LA116A, LA116B, LA116C, LA116D, LA116E, LA116F, LA116H, LA116I
Maximum Layers of Packaging:	6
Site:	LANL
Waste-Generating Facility:	TA-55, Plutonium Facility (building PF-4), all wings
Time Period of Generation:	1978–present
Defense Waste Status:	Defense-related transuranic (TRU) waste. There is no historical record or evidence of spent nuclear fuel or high-level waste ever having been handled at the facility.
Waste Stream Volume (as stored):	4173 containers (873 m^3)
Waste Stream Volume (after repackaging):	850 SWBs, 3873 drums (2390 m^3)

Facility Mission

stet ~~transuranic (TRU)~~

TA-55 has extensive capabilities for the extraction and recovery of plutonium from residues and scraps generated from operations at various LANL facilities and other DOE sites in the defense complex. The recovered plutonium is converted into pure plutonium feedstock. These manufacturing and recovery operations, associated maintenance operations, and TA-55 plutonium research are the sources of TRU ~~waste~~ contaminated scrap, residues, and debris generated at TA-55. The scrap and residues are processed to recover as much plutonium as practicable before disposal. Wastes are generated from plutonium recovery and purification for defense and non-defense programs; these wastes are generated and produced in the same rooms and gloveboxes and ~~so~~ were not segregated until August 27, 1998.

based on funding source

Waste Generating Processes

Plutonium manufacturing, recovery, and research operations at the TA-55 Plutonium Facility, as well as associated maintenance operations, generate ~~transuranic~~ TRU wastes. These operations include:

- Preparation of ultra-pure plutonium metals, alloys, and compounds
- Preparation of specific alloys, including casting and machining these materials into specific shapes
- Determination of the high-temperature thermodynamic properties of plutonium
- Reclamation of plutonium from scrap and residues produced by numerous feed sources
- Disassembly of components for inspection and analysis
- Manufacturing of parts on a limited basis

Process Feed

Plutonium metal or metal alloys; plutonium oxides and hydroxide cakes; other actinide metals or metal alloys and oxides; plutonium scrap; disassembled weapons components (pits); plutonium-beryllium sources; pyrochemical salts; reactor fuel pellets; crucible pieces; ash; analytical laboratory solutions; residues from other DOE facilities; anode heels; and analytical laboratory solutions.

Waste Material Parameter List

Waste materials: cellulosics, rubber, plastics; iron-based metals and alloys (generally less than 5 percent by volume)

Packaging materials: steel, plastics

Waste Stream Description

The combustible debris waste stream includes rubber, plastic-based, and cellulose-based waste generated at the facility. Plastic-based waste includes, but may not be limited to, polyethylene and vinyl tape; gloves; plastic vials; polystyrene; Tygon tubing; polyvinyl chloride plastic; Teflon products; Plexiglas; and dry box gloves (unleaded neoprene base). Cellulose-based waste includes, but may not be limited to, rags, wood, paper, and cardboard; laboratory coats and coveralls; booties and cotton gloves, and similar materials. The waste may also contain a small fraction (generally less than 5 percent) of non-combustible solids (e.g., scrap metal, metal lids, zippers, discarded tools).

RCRA Characterization

TA-55-19 is conservatively assigned the following EPA Hazardous Waste Numbers (HWNs). Many of the HWNs are time-dependent, and apply only to containers generated by a particular process over a specific period of time, as documented in process AK reports.

- F001, F002, F003 and F005
- D004, D005, D006, D007, D008, D009, D010, D011, D018, D019, D021, D022, D035, D038, D039, D040

- Drums containing waste from P/S codes AC, AC2, and SA are segregated from this waste stream until the potential applicability of HWN U213 has been resolved (*Acceptable Knowledge Summary Report for Miscellaneous Operations at TA-55* [TWCP-AK-2.1-004]).
- Drums containing waste generated from P/S codes SD and SS between 02/98 and 06/98 are segregated as a subset of TA-55-19 due to the potential presence of vanadium pentoxide (EPA HWN P120). (See separate AK summary for TA-55-19A).

Radionuclide Content

These waste streams predominantly contain a variety of plutonium material types with different well-defined isotopic compositions. Americium-241, neptunium-237, and uranium-234 may be present at detectable concentrations as decay products of their plutonium precursors. Some of the processes separate plutonium from americium and uranium. The waste will usually be enriched in americium-241 and uranium-234 relative to plutonium, but may also be depleted in some cases. Some waste may contain uranium from one of several uranium material types. Other waste may contain various radionuclides used as radioassay sources, including americium-241, americium-243, cerium-144, curium-244, protactinium-231, neptunium-237, thorium-232, thorium-232 enriched in thorium-230, uranium-233, and depleted uranium. ~~Common~~ as well as ~~Contam~~ Contaminants from uranium-235: ~~are~~ its decay daughter, protactinium-231, and fission product ~~137~~ cesium-137.

Primary References for Documentation of Acceptable Knowledge

Process Acceptable Knowledge Summary Report for Chloride Operations at TA-55 (TWCP-AK-2.1-002)

Process Acceptable Knowledge Summary Report for Metal Operation Processes at TA-55 (TWCP-AK-2.1-003)

Process Acceptable Knowledge Summary Report for Miscellaneous Operations at TA-55 (TWCP-AK-2.1-004)

Process Acceptable Knowledge Summary Report for Nitrate Operations at TA-55 (TWCP-AK-2.1-005)

Process Acceptable Knowledge Summary Report for Pyrochemical Processes at TA-55 (TWCP-AK-2.1-006)

Process Acceptable Knowledge Summary Report for Special Processing at TA-55 (TWCP-AK-2.1-007)

ACCEPTABLE KNOWLEDGE SUMMARY FOR TA-55-19A

Waste Stream Number and Title:	TA-55-19A, Mixed Combustible Debris with P120 **NOTE:** This is a subset (i.e., lot) of waste stream TA-55-19. It is distinguished from TA-55-19 only insofar as the waste has the potential to include vanadium pentoxide (EPA HWN P120).
Summary Category Group:	S5000
Waste Matrix Code and Description:	S5300
TWBIR:	LA-M16
TRUCON Codes:	LA116A, LA116B, LA116C, LA116D, LA116E, LA116F, LA116H, LA116I
Maximum Layers of Packaging:	6
Site:	LANL
Waste-Generating Facility:	TA-55, Plutonium Facility (building PF-4), all wings
Time Period of Generation:	02/98–06/98
Defense Waste Status:	Defense-related TRU waste. There is no historical record or evidence of spent nuclear fuel or high-level waste ever having been handled at the facility.
Waste Stream Volume (as stored):	Not yet determined
Waste Stream Volume (after repackaging):	Not yet determined

Facility Mission

TA-55 has extensive capabilities for the extraction and recovery of plutonium from residues and scraps generated from operations at various LANL facilities and other DOE sites in the defense complex. The recovered plutonium is converted into pure plutonium feedstock. These manufacturing and recovery operations, associated maintenance operations, and TA-55 plutonium research are the sources of TRU ~~waste~~ contaminated scrap, residues, and debris generated at TA-55. The scrap and residues are processed to recover as much plutonium as practicable before disposal. Wastes are generated from plutonium recovery and purification for defense and non-defense programs; these wastes are generated and produced in the same rooms and gloveboxes and ~~so~~ were not segregated until August 27, 1998.

based on funding source

Waste Generating Processes

Plutonium manufacturing, recovery, and research operations at the TA-55 Plutonium Facility, as well as associated maintenance operations, generate ~~transuranic~~ TRU wastes. These operations include:

- Preparation of ultra-pure plutonium metals, alloys, and compounds
- Preparation of specific alloys, including casting and machining these materials into specific shapes
- Determination of the high-temperature thermodynamic properties of plutonium
- Reclamation of plutonium from scrap and residues produced by numerous feed sources
- Disassembly of components for inspection and analysis
- Manufacturing of parts on a limited basis

Process Feed

Plutonium metal or metal alloys; plutonium oxides and hydroxide cakes; other actinide metals or metal alloys and oxides; plutonium scrap; dissassembled weapons components (pits); plutonium-beryllium sources; pyrochemical salts; reactor fuel pellets; crucible pieces; ash; analytical laboratory solutions; residues from other DOE facilities; anode heels; and analytical laboratory solutions.

Waste Material Parameter List

Waste materials: cellulosics, rubber, plastics; iron-based metals and alloys (generally less than 5 percent by volume)

Packaging materials: steel, plastics

Waste Stream Description

The combustible debris waste stream includes rubber, plastic-based, and cellulose-based waste generated at the facility. Plastic-based waste includes, but may not be limited to, polyethylene and vinyl tape; gloves; plastic vials; polystyrene; Tygon tubing; polyvinyl chloride plastic; Teflon products; Plexiglas; and dry box gloves (unleaded neoprene base). Cellulose-based waste includes, but may not be limited to, rags, wood, paper, and cardboard; laboratory coats and coveralls; booties and cotton gloves, and similar materials. The waste may also contain a small fraction (generally less than 5 percent) of non-combustible solids (e.g., scrap metal, metal lids, zippers, discarded tools).

RCRA Characterization

TA-55-19A is conservatively assigned the following EPA Hazardous Waste Numbers (HWNs). Many of the HWNs are time-dependent, and apply only to containers generated by a particular process over a specific period of time, as documented in process AK reports.

- F001, F002, F003 and F005
- D004, D005, D006, D007, D008, D009, D010, D011, D018, D019, D021, D022, D035, D038, D039, D040
- P120
- Drums containing waste from P/S codes AC, AC2, and SA are segregated from this waste stream until the potential applicability of HWN U213 has been resolved.

Radionuclide Content

These waste streams predominantly contain a variety of plutonium material types with different well-defined isotopic compositions. Americium-241, neptunium-237, and uranium-234 may be present at detectable concentrations as decay products of their plutonium precursors. Some of the processes separate plutonium from americium and uranium. The waste will usually be enriched in americium-241 and uranium-234 relative to plutonium, but may also be depleted in some cases. Some waste may contain uranium from one of several uranium material types. Other waste may contain various radionuclides used as radioassay sources, including americium-241, americium-243, cerium-144, curium-244, protactinium-231, neptunium-237, thorium-232, thorium-232 enriched in thorium-230, uranium-233, and depleted uranium. as well as contaminants from uranium-235: its decay daughter, protactinium-231, and fission ~~product~~ product cesium-137.

Primary References for Documentation of Acceptable Knowledge

Process Acceptable Knowledge Summary Report for Chloride Operations at TA-55 (TWCP-AK-2.1-002)

Process Acceptable Knowledge Summary Report for Metal Operation Processes at TA-55 (TWCP-AK-2.1-003)

Process Acceptable Knowledge Summary Report for Miscellaneous Operations at TA-55 (TWCP-AK-2.1-004)

Process Acceptable Knowledge Summary Report for Nitrate Operations at TA-55 (TWCP-AK-2.1-005)

Process Acceptable Knowledge Summary Report for Pyrochemical Processes at TA-55 (TWCP-AK-2.1-006)

Process Acceptable Knowledge Summary Report for Special Processing at TA-55 (TWCP-AK-2.1-007)

ACCEPTABLE KNOWLEDGE SUMMARY FOR TA-55-20

Waste Stream Number and Title:	TA-55-20, Non-mixed Combustible Debris Waste
Summary Category Group:	S5000
Waste Matrix Code and Description:	S5300
TWBIR:	LA-T16
TRUCON Codes:	LA116A, LA116B, LA116C, LA116D, LA116E, LA116F, LA116H, LA116I
Maximum Layers of Packaging:	6
Site:	LANL
Waste-Generating Facility:	TA-55, Plutonium Facility (building PF-4), all wings
Time Period of Generation:	1979–present
Defense Waste Status:	Defense-related TRU waste. There is no historical record or evidence of spent nuclear fuel or high-level waste ever having been handled at the facility.
Waste Stream Volume (as stored):	281 containers (59 m^3)
Waste Stream Volume (after repackaging):	Not available

Facility Mission

TA-55 has extensive capabilities for the extraction and recovery of plutonium from residues and scraps generated from operations at various LANL facilities and other DOE sites in the defense complex. The recovered plutonium is converted into pure plutonium feedstock. These manufacturing and recovery operations, associated maintenance operations, and TA-55 plutonium research are the sources of TRU ~~waste~~ contaminated scrap, residues, and debris generated at TA-55. The scrap and residues are processed to recover as much plutonium as practicable before disposal. Wastes are generated from plutonium recovery and purification for defense and non-defense programs; these wastes are generated and produced in the same rooms and gloveboxes and ~~so~~ were not segregated until August 27, 1998.

based on funding source

Waste Generating Processes

Plutonium manufacturing, recovery, and research operations at the TA-55 Plutonium Facility, as well as associated maintenance operations, generate ~~transuranic~~ TRU wastes. These operations include:

- Preparation of ultra-pure plutonium metals, alloys, and compounds
- Preparation of specific alloys, including casting and machining these materials into specific shapes
- Determination of the high-temperature thermodynamic properties of plutonium
- Reclamation of plutonium from scrap and residues produced by numerous feed sources
- Disassembly of components for inspection and analysis
- Manufacturing of parts on a limited basis

Process Feed

Plutonium metal or metal alloys; plutonium oxides and hydroxide cakes; other actinide metals or metal alloys and oxides; plutonium scrap; disassembled weapons components (pits); plutonium-beryllium sources; pyrochemical salts; reactor fuel pellets; crucible pieces; ash; analytical laboratory solutions; residues from other DOE facilities; anode heels; and analytical laboratory solutions.

Waste Material Parameter List

Waste materials: cellulosics, rubber, plastics; iron-based metals and alloys (generally less than 5 percent by volume)

Packaging materials: steel, plastics

Waste Stream Description

The combustible debris waste stream includes rubber, plastic-based, and cellulose-based waste generated at the facility. Plastic-based waste includes, but may not be limited to, polyethylene and vinyl tape; gloves; plastic vials; polystyrene; Tygon tubing; polyvinyl chloride plastic; Teflon products; Plexiglas; and dry box gloves (unleaded neoprene base). Cellulose-based waste includes, but may not be limited to, rags, wood, paper, and cardboard; laboratory coats and coveralls; booties and cotton gloves, and similar materials. The waste may also contain a small fraction (generally less than 5 percent) of non-combustible solids (e.g., scrap metal, metal lids, zippers, discarded tools).

RCRA Characterization

No HWNs apply to containers in waste stream TA-55-20.

Radionuclide Content

These waste streams predominantly contain a variety of plutonium material types with different well-defined isotopic compositions. Americium-241, neptunium-237, and uranium-234 may be present at detectable concentrations as decay products of their plutonium precursors. Some of the processes separate plutonium from americium and uranium. The waste will usually be enriched

in americium-241 and uranium-234 relative to plutonium, but may also be depleted in some cases. Some waste may contain uranium from one of several uranium material types. Other waste may contain various radionuclides used as radioassay sources, including americium-241, americium-243, cerium-144, curium-244, protactinium-231, neptunium-237, thorium-232, thorium-232 enriched in thorium-230, uranium-233, and depleted uranium. as well as contaminants of uranium-235: its decay daughter, protactinium-231, and fission product cesium-137.

Primary References for Documentation of Acceptable Knowledge

Process Acceptable Knowledge Summary Report for Chloride Operations at TA-55 (TWCP-AK-2.1-002)

Process Acceptable Knowledge Summary Report for Metal Operation Processes at TA-55 (TWCP-AK-2.1-003)

Process Acceptable Knowledge Summary Report for Miscellaneous Operations at TA-55 (TWCP-AK-2.1-004)

Process Acceptable Knowledge Summary Report for Nitrate Operations at TA-55 (TWCP-AK-2.1-005)

Process Acceptable Knowledge Summary Report for Pyrochemical Processes at TA-55 (TWCP-AK-2.1-006)

Process Acceptable Knowledge Summary Report for Special Processing at TA-55 (TWCP-AK-2.1-007)

ACCEPTABLE KNOWLEDGE SUMMARY REPORT FOR WASTE STREAMS TA-55-19 AND TA-55-20

1.0 INTRODUCTION

All transuranic (TRU) waste must be sufficiently characterized and certified before it is shipped to the Waste Isolation Pilot Plant (WIPP). The U.S. Environmental Protection Agency (EPA) allows use of acceptable knowledge (AK) for waste characterization, and defines AK in its guidance document, *Waste Analysis at Facilities that Generate, Treat, Store and Dispose of Hazardous Waste*. Attachment B, Waste Analysis Plan, to the *Hazardous Waste Facility Permit Issued to the Waste Isolation Pilot Plant* (EPA No. NM4890139088) (WIPP WAP) defines AK information and provides guidelines on how AK should be obtained and documented.

Add to section 15 reference

This AK summary report was prepared in accordance with *Acceptable Knowledge Documentation* (TWCP-QP-1.1-021). The primary purpose of this report is to systematically organize, evaluate, and summarize AK information about characteristics of the wastes generated by the Plutonium Facility at Technical Area (TA) 55, one of the TRU waste generators at Los Alamos National Laboratory (LANL). By doing so, this report provides technical support for assignment of specific waste containers to the waste stream.

Add to section 15 Reference

2.0 METHODOLOGY USED TO SEARCH FOR AK RECORDS

The AK search for the information related to waste streams TA-55-19 (including lot TA-55-19A) and TA-55-20 covered:

- Review of the *Los Alamos National Laboratory Transuranic Waste Characterization Sampling Plan* (TWCP-PLAN-0.2.7-001) (Sampling Plan) that includes information regarding all waste streams, including TA-55-19 and TA-55-20
- Review of documents related to the waste generation and waste management activities at TA-55 as documented in the Acceptable Knowledge Roadmap (Attachment 1)
- Interviews with personnel involved with waste generation and waste management at TA-55 as documented in process AK reports listed in the Acceptable Knowledge Roadmap (Attachment 1)
- Review of process AK reports for TA-55 processes (as discussed below)
- Analysis of processes generating waste, as discussed in the process AK reports and in this report

The Transuranic Waste Characterization/Certification Project (TWCP) Records Management/Document Control (RMDC) Center contains copies of the documents that are referenced in this summary report. Unclassified Controlled Nuclear Information (UCNI) will be reported in records, rather than included in this report. Such records are identified as UCNI in the Acceptable Knowledge Roadmap (Attachment 1).

This AK summary report is based on detailed information compiled in a set of closely related reports about TRU waste generating activities at TA-55. For convenience in organizing AK for plutonium processing at this facility, the processes were categorized into six arbitrary operational areas. The multiple processes in each area are then described in detail in the following six process AK reports ~~for plutonium~~.

- *Process Acceptable Knowledge Summary Report for Chloride Operations at TA-55* (TWCP-AK-2.1-002)
- *Process Acceptable Knowledge Summary Report for Metal Operation Processes at TA-55* (TWCP-AK-2.1-003)
- *Process Acceptable Knowledge Summary Report for Miscellaneous Operations at TA-55* (TWCP-AK-2.1-004)
- *Process Acceptable Knowledge Summary Report for Nitrate Operations at TA-55* (TWCP-AK-2.1-005)
- *Process Acceptable Knowledge Summary Report for Pyrochemical Processes at TA-55* (TWCP-AK-2.1-006)
- *Process Acceptable Knowledge Summary Report for Special Processing at TA-55* (TWCP-AK-2.1-007)

The process AK reports contain information on over 200 individual processes that have each been assigned a unique identifier called a process/status (P/S) code. For example, the nitrate operations report (*Process Acceptable Knowledge Summary Report for Nitrate Operations at TA-55* [TWCP-AK-2.1-005,R.2]) covers waste generation processes and characteristics for ~~about~~ over 80 different processes, each with its own P/S code. The search and compilation of AK information was based on P/S code, because that is the greatest level of process detail recorded in waste generator records. However~~, as described in~~ section 3.2, TA-55 TRU waste items have always been segregated and packaged ~~into~~ type waste containers based on the physical form and material content of the waste, without regard to process of origin (i.e., P/S code). In order to ~~mitigate confusion resulting from~~ these two different ways of categorizing TA-55 waste (by process of generation and P/S code or by material content and waste stream number), separate AK reports have been prepared for each categorization method (i.e., process AK reports for process areas, and AK summary reports for waste streams). The AK information search was performed based on the processes used at TA-55 and tracked by the P/S codes, and it is summarized in the process AK reports.

This AK summary report summarizes AK information specific to the combustible debris waste streams TA-55-19 (including waste stream lot TA-55-19A) and TA-55-20.

3.0 DESCRIPTION OF THE WASTE STREAM

3.1 Facility and Mission

TA-55 has extensive capabilities for the extraction and recovery of plutonium from residues and scraps generated from operations at various LANL facilities and other DOE sites in the defense complex. The recovered plutonium is converted into pure plutonium feedstock. These manufacturing and recovery operations, associated maintenance operations, and TA-55 plutonium research are the sources of TRU ~~waste~~ contaminated scrap, residues, and debris generated at TA-55. The scrap and residues are processed to recover as much plutonium as practicable before disposal. Wastes are generated from plutonium recovery and purification for defense and non-defense programs; these wastes are generated and produced in the same rooms and gloveboxes and ~~so~~ were not segregated based on funding source until August 27, 1998.

The combustible waste streams TA-55-19 and TA-55-20 were generated at the TA-55 Plutonium Facility (Building PF-4) as debris waste (glovebox and processing-room trash) from process operations and glovebox maintenance involved in plutonium recovery. For this reason, the waste streams are defense related. However, waste also was produced from "special process" and research-related activities. These wastes were not segregated, but were commingled in the final waste containers to such an extent that segregation is not possible on the basis of waste generating process or glovebox location (~~TWCP-887~~). The waste was also co-mingled with room trash related to these same operations (both defense and non-defense), which was initially boxed as low-level waste but was returned for discard in drums as TRU waste when on-site radioassay results showed it exceeded the low-level discard limits (DLs) (TWCP-816).

~~TA-55-19 and TA-55-20 combustible debris waste streams were generated in the TA-55 Plutonium Facility (Building PF-4).~~ A LANL site map and a detailed map of the buildings at TA-55, including Building PF-4, are shown in Attachment 2.

3.2 Basis, Rationale, and Assumptions Used to Delineate the Waste Streams

The basis for delineation of TA-55 waste streams was established by the evolving set of LANL and TA-55 waste management plans and site-specific procedures, which date back to the start of operations at the Plutonium Facility in 1978 (TWCP-352, TWCP-697, TWCP-700, TWCP-701, TWCP-3943). The stated guidance and practice from the beginning ~~and~~ continuing to the present day has been to handle and package all combustible and noncombustible debris waste in a similar fashion, regardless of the process of origin. Relevant details of these

planning and implementation documents are summarized in this section, in order to provide background information to support the process used by TWCP to assign TA-55 waste containers to specific waste streams. Waste stream assignment is made on the basis of waste generator information compiled in the TWCP waste container data base, which comprises the bulk of the Sampling Plan. Waste generator information is reviewed to identify the types and sources of waste items present in each drum, in order to evaluate the most appropriate waste summary group, waste matrix code, and potential for the presence of hazardous constituents.

3.2.1 Waste Packaging at TA-55

Inspection, collection, documentation and packaging operations of solid, certifiable TRU wastes at TA-55 are conducted in PF-4 by a waste management section or team (TWCP-352, TWCP-700, TWCP-701, TWCP-3943). Wastes from all TRU waste-generating activities at TA-55 are handled and packaged by this team. Materials are considered waste only when they have been received and processed by the waste management team. Waste segregation schemes used by this team have evolved since operations began at the Plutonium Facility in 1978.

Discard Limits (DL) for plutonium in various types of waste

In 1978, the standard operating procedure for waste management at TA-55 stated the guiding philosophy of minimizing the amount of waste generated, and minimizing the plutonium content of that waste (TWCP-3943). ~~DLs~~ were established by the waste-generating group, and approved by the LANL division office and the DOE Albuquerque Operations Office. Personnel were requested to sort potentially recyclable TRU waste items (i.e., those containing potentially recoverable amounts of plutonium) into classes, such as rubber, plastics, rags, non-Pu metals, glass, oils, cans, sweepings, etc. These materials were then assayed. Based upon its plutonium level relative to the DL, material was either sent to recovery operations or to "20-year" retrievable storage. All liquids, including oils, were required to be sent to recovery operations for processing. Liquids were explicitly prohibited from any container of solid waste materials.

In 1984, a lab-wide TRU Waste Certification Plan was adopted for newly generated TRU waste (TWCP-697). Each LANL waste generator was required to develop an attachment to this plan to define the details of the waste certification functions and controls that applied to their specific processes and waste streams. TA-55 prepared an attachment in March 1987 for contact-handled combustible and noncombustible solid waste (TWCP-701).

Waste Acceptance Criteria

- Combustible waste forms included materials which could be reduced to an ash if desired but which did not require further processing to meet the WIPP WAC (TWCP-701). (This definition is still current.) Subcategories included plastic-base, cellulose-base and miscellaneous (graphite and graphite crucibles). It was acceptable for the combustible waste stream to include some unspecified "small" fraction of noncombustible solids such as scrap metals.

- Noncombustible waste forms included materials that could not be reduced to ash but that did meet the WIPP WAC without further processing (TWCP-701). The two subcategories were metals and non-metals. The non-metal wastes included glass, fiberglass heating mantles, porcelain crucibles, ceramic furnace tube inserts, and leaded glovebox gloves. It was acceptable for the noncombustible waste stream to include some unspecified "small" fraction of combustible solids, and that ~~may~~ could be contained in plastics. For WIPP purposes, any waste forms that were chemically compatible and that met the WAC, could be combined into a single waste container.

In 1995, a new TRU Waste Certification Plan was adopted, including a new attachment that formalizes how the TA-55 waste management team currently segregates newly generated wastes into waste streams (TWCP-700). Waste materials are segregated by:

- radioisotope, ~~for~~ in order to meet nondestructive assay (NDA) and gas generation requirements
- material matrix, ~~for~~ in order to meet NDA and TRUCON requirements
- hazardous constituents, ~~for~~ in order to meet RCRA and Department of Transportation (DOT) requirements

Combustible waste forms include plastic base and cellulose base, but graphitic waste is now in the noncombustible category. Noncombustible debris waste forms are broken down to a finer level of classification than had previously been used:

- metals (TRUCON code 117)
- glass (TRUCON code 118)
- HEPA filters (TRUCON code 119)
- leaded gloves (TRUCON code 123)
- salts (TRUCON code 124)
- graphite (TRUCON code 115)

In addition, each major waste form includes provisions for small quantities of unspecified waste with similar properties. This provision is necessary in order to allow for infrequently encountered waste items.

3.2.2 Waste Stream Delineation for TA-55

Insert new start of ¶ with 2 sentences from bottom of p. 22 ~~has been~~

Starting in 1987, the TA-55 Plutonium Facility began its current system of tracking waste items both by the process from which they originated as well as by their material content ~~(although strict adherence to this requirement was inconsistent in the early years)~~. Waste items are labeled with an item identification (ID) code that contains information on the waste material parameter of the item and an embedded P/S code that corresponds to the process that produced the waste item. Waste items are packaged into waste containers based on the material content of the waste, without regard to P/S code. ~~This practice complicates AK tracking because~~ Thus, a single waste container can include waste items from several P/S codes.

particularly

new ¶

append last 2 ¶ from ~~end of~~ section 3.6.1 (page ~~22~~ 26) ~~and~~

In the Sampling Plan, TA-55 wastes have been assigned to waste streams based on the waste segregation schemes used by TA-55:

- First by radioisotope content (Pu238 or Pu239 ~~nuclear~~ material type)
- Then by material matrix (combustible, noncombustible, metal, glass, etc. waste types)
- Then by hazardous waste status (mixed, non-mixed, or special case waste streams)

(such as the WODF and DWLS) that ~~was~~ has been

Waste stream delineation was performed using waste generator information compiled in an electronic data base that is part of the Sampling Plan. Because waste items from several different P/S codes were combined into each waste drum, a special sort on the P/S code of each waste item in a drum was necessary to determine if the drum contained all non-mixed items, some or all mixed-waste items, or a special case item (such as an item from P/S code SS carrying the HWN P120). If the P/S code information was missing for any item in a waste drum (as was the case for many older wastes), that drum was conservatively assigned to the mixed-waste stream. Fortunately, the special case wastes carrying the HWN P120 ~~for the potential to carry HWN U213~~ were generated relatively recently, such that the data base records for those items are complete.

EPA Hazardous Waste Number

3.2.3 Waste Container Labeling

The net effect of the waste packaging system used at TA-55 is that several ~~EPA hazardous waste numbers (~~HWNs~~)~~ are conservatively assigned to individual waste streams for the purposes of WIPP disposal, because the WIPP WAP requires HWN assignment on a waste stream rather than a waste container basis. For the purposes of generator and on-site storage, however, LANL labels waste on a container by container basis. Thus, the hazardous labels on containers in storage at LANL should not be expected to correspond to the HWNs assigned to the waste stream through this AK summary report. Hazardous labels ~~will be~~ are updated to meet WIPP disposal requirements just before loading waste containers into the Transuranic Package Transporter-Model II (TRUPACT-II) for shipping to WIPP.

3.3 Waste Physical Form and Content Description

The TA-55-19, -19A, and-20 waste streams are defined as combustible debris waste streams (Sampling Plan, Appendix D), with TA-55-19 being a mixed-waste stream and TA-55-20 its non-mixed counterpart. TA-55-19A is a ~~small substream~~ lot, distinguished from TA-55-19 by the addition of HWN P120. The waste streams includes paper, rags, plastic, rubber, and plastic-based and cellulose-~~based waste~~ generated at the facility. Plastic-based waste includes, but may not be limited to, polyethylene and vinyl tape, gloves, plastic vials, polystyrene, Tygon tubing, polyvinyl chloride plastic, Teflon products, Plexiglas, and dry box gloves (unleaded neoprene base). Cellulose-based waste includes, but may not be limited to rags, wood, paper, and cardboard; laboratory coats and overalls; booties and cotton gloves, and similar materials. The waste may also contain a small fraction (generally less than 5 percent) of non-combustible solids (scrap metal, metal lids, and clothing zippers) (Sampling Plan, Appendix D).

3.4 Waste Volume and Time Period of Waste Generation

The following information is from Appendix D of the Sampling Plan (~~TWCP-PLAN-0.2.7-001~~, R.3, ~~Appendix D~~). These values are expected to change because the sampling plan is continually updated as new waste information is obtained. u.c.

- TA-55-19 includes 4173 containers (873 cubic meters), that were generated from 1978 to the present time.

- Waste stream lot TA-55-19A is not yet fully defined in the sense that a list of specific waste containers in this lot has not yet been prepared. This is because P/S codes are not always explicitly identified for waste items in TA-55 waste containers. However, it may be possible to extract this information from the waste item identifiers, at which time waste containers can be assigned to TA-55-19A.

X-Sender: 094282@empo.lanl.gov
X-Mailer: QUALCOMM Windows Eudora Version 5.0
Date: Tue, 06 Mar 2001 07:38:01 -0700
To: bailey@lanl.gov, John Musgrave <jmusgrave@lanl.gov>, mavisl@lanl.gov
From: June Fabryka-Martin <fabryka@lanl.gov>
Subject: Fwd: Re: Global edit to AK reports: leaded gloves
X-RCPT-TO: <154344@empo.lanl.gov>

Date: Mon, 05 Mar 2001 17:41:31 -0700
To: June Fabryka-Martin <fabryka@lanl.gov>
From: Charles Foxx <cfoxx@lanl.gov>
Subject: Re: Global edit to AK reports: leaded gloves

June,
I would change the concern statement to read something like "....concern that explosive lead oxides might form if....". Otherwise it looks fine.
Jim Foxx

At 04:07 PM 3/4/01 -0700, you wrote:
The following should replace the 4th and 5th sentences in the first paragraph of section 3.5.1 in all of the process AK reports and in the waste stream AK reports:

Prior to 1987, leaded gloves were discarded in the combustible and non-combustible debris waste streams. Between 1987 and May 1992, leaded gloves were segregated from combustible debris and discarded in the metal debris waste stream because of concern ~~about releasing lead to the atmosphere~~ if the combustible debris waste was incinerated. Since May 1992, leaded gloves have been routinely segregated from other metal debris waste and assigned to a separate leaded-glove waste stream.

Replace bullet about leaded gloves in section 4.2 and use as standardized footnote about leaded gloves in the process AK timelines:

Prior to 1987, leaded gloves were not segregated from combustible debris. Between 1987 and May 1992, they were segregated and discarded in the metal debris waste stream. Since May 1992, they have been routinely segregated and assigned to a leaded-glove waste stream, still under the originating P/S code (TWCP-4166).

****

June Fabryka-Martin
TRU Waste Characterization/Certification Program (TWCP)
Environmental Technology Group (Group E-ET)
Mail Stop E517
Los Alamos National Laboratory
Los Alamos, NM 87545
Phone (505) 665-2300

- TA-55-20 includes 281 containers (59 cubic meters), that were generated from 1979 to the present time.

3.5 Waste Stream Generation Processes

3.5.1 Overview

The TA-55-19, -19A, and -20 combustible debris waste streams were generated from combustible materials used in processes to recover plutonium from residues, metal fabrication, and research and development activities. The variety of plutonium handling operations includes:

- Preparing ultra-pure plutonium metals, alloys, and compounds
- Preparing on a large scale specific alloys, including casting and machining these materials into specific shapes
- Determining high-temperature thermodynamic properties of plutonium
- Reclaiming plutonium from scrap and residues produced by numerous feed sources
- Disassembling components for inspection and analysis
- Manufacturing of parts on a limited basis
- Processing mixtures of plutonium and uranium oxides for reactor fuels.

Should there be a change bar here?

The manufacturing and research operations performed at TA-55 in the recovery of plutonium results in the production of plutonium-contaminated scrap and residues. These residues are processed to recover as much plutonium as is practical (TWCP-352). TA-55 has extensive capabilities for the extraction and recovery of plutonium from residues and scrap generated from operations at various LANL, other U.S. Department of Energy (DOE) facilities, and commercial radioactive sources. These recovery operations, along with associated maintenance operation, and TA-55 plutonium research are the sources of TRU waste generated at TA-55.

Plutonium processing facilities generate contaminated combustible waste from:

- Plastic materials that result in combustible waste such as Tygon tubing, polyvinyl chloride vials, plastic bags, etc.
- Cellulose-based cleaning aids and personal protective equipment such as rags, paper wipes, laboratory coats, coveralls, booties, etc.
- Rubber- and Teflon-based products used in operations, such as rubber gloves, Teflon tape, gaskets, stoppers, etc.

3.5.2 Process Flow Diagrams

Detailed information about the TA-55 plutonium recovery processes can be found in the Process AK reports. For purposes of the AK search, and to allow convenient referral to and referencing of the Process AK reports in this waste stream AK Summary Report, the processes have been arbitrarily divided into six major areas:

Switch order

- Nitrate Operations (TWCP-AK-2.1-005)
- Chloride Operations (TWCP-AK-2.1-002)
- Miscellaneous Operations (TWCP-AK-2.1-004)
- Special Processing (TWCP-AK-2.1-007)
- Metal Operation Processes (TWCP-AK-2.1-003)
- Pyrochemical Processes (TWCP-AK-2.1-006)

Generalized flow diagrams for the six operational areas relevant to this AK search are presented as Attachment 3 and indicate P/S codes for the various processes. The full block flow diagram for plutonium processing and waste management at TA-55 is given in reference TWCP-886.

The following subsections describe the processes that generated debris waste assigned to the TA-55-19, -19A, and -20 waste streams. The potential for RCRA-regulated constituents to be present due to feed materials or chemical use in these processes is summarized in Section ~~3.5~~ 3.6.1 and 3.6.3. The applicability of EPA HWNs as a result of this potential is specified in Section 8.

3.5.3 Nitrate Operations

switch order with Chloride operations (3.5.4)

P/S codes AL, AO, AP, AS, AT, ATL, BAC, BF, BL, BM, BU, CC, CD, CF, CH, COD, COL, CPOD, CR, DF, DP, DS, ED, ETD, EV, FA, FC, FX, GMS, HC, HCD, HD, HGMS, HP, HRA, IA, IS, LC, LG1, LG2, LR, MAG, MAS, MB, MELL, MF, ML, MPD, NC, NL, NR, OD, OH, OY, PA, PAF, PR, PS, PT, PTS, RB, RBJ, RC, RCM, RFX, RO, RR, SC, SP, SSD, SX, TDC, UPS, US, US2, VC, VP1, VP2, VP3, VUL, ZD

A detailed description of nitrate operations can be found in *Process Acceptable Knowledge Summary Report for Nitrate Operations at TA-55* (TWCP-AK-2.1-005).

The overall goal of the nitrate operations is to recover plutonium from scrap and residues, and produce a purified plutonium oxide for conversion into metal. The primary feed sources for the nitrate operations are plutonium residues from other recovery operations (e.g., chloride operations), metal preparation, metal fabrication, analytical laboratory operations, and residues from other DOE facilities. Nitrate operations can be broken down into the following process steps:

- pretreatment
- dissolution
- purification
- evaporation
- cement fixation

Pretreatment primarily includes physical processes used to separate scrap and residues for the next step, dissolution. It may include calcination, caustic leaching, chemical separation (hydroxide or oxalate precipitation), crushing and pulverizing, distillation, filtering of liquids or oils, incineration, magnetic separation, passivation, scraping, or sorting. After pretreatment, solids are sent to dissolution if plutonium concentrations are above the DL and to cement fixation if concentrations are below the DL. Liquids are sent to purification if plutonium concentrations are above the DL and to the TA-50 Radioactive Liquid Waste Treatment Facility (RLWTF) if they meet the TA-50 RLWTF ~~waste acceptance criteria~~ (WAC) or to cement fixation; otherwise, they are further treated until they meet that WAC.

Dissolution includes various steps that generate plutonium nitrate solutions for feed to purification. Primary chemicals used in dissolution are nitric acid and calcium fluoride and/or hydrofluoric acid. ~~Dissolution takes place in pots or cascade systems~~ Filtered solids are returned to the dissolution process until plutonium concentrations are below the DL, then sent to cement fixation for disposal. Debris items are disposed after removal of plutonium contamination above the DL. Heavy metals are ~~concentrated in the~~ plutonium-rich hydroxide cakes ~~that are produced in chloride operations~~ and derive from one or more of the following: (a) feed materials that consist of or contain the metals; (b) leaching of metal from equipment components; or (c) ~~in the case of silver~~ from ~~its~~ the use (until 1994) as an indicator of chloride content. Plutonium-bearing solutions are sent on to purification.

move to Chloride operations (page 12)

of silver salt

Purification consists of ion exchange and precipitation processes. The ion exchange processes use resin-filled columns to collect plutonium, which binds to the resin while impurities flow through the columns; an eluting agent is then used to release purified plutonium in solution. The enriched solutions are then sent to oxalate precipitation, which converts the plutonium to oxide form. The depleted liquids are sent to the evaporator or the RLWTF, and the calcined plutonium oxides are sent to the vault.

The evaporator processes plutonium-poor liquids in order to re-concentrate plutonium, if possible, or to reduce the volume of liquid waste. Evaporator bottoms are either sent back to ion exchange or discarded to cement fixation, depending on their plutonium content. Heavy metals that may be present are concentrated in this process.

In the cement fixation step, wastes with low plutonium concentrations are collected and immobilized in cement. Most ~~if not all~~ of the wastes generated under these processes (P/S codes CF, HP, and IA) are classified as cemented wastes and would not be part of the debris waste streams.
normally

move to precede nitrate operations (3.5.3)

3.5.4 Chloride Operations

P/S codes CL, CLRD, CLS, CS, CSE, CW, CX, CXL, LD, MB, MS, PB, PRR, PUB, and SE

A detailed description of chloride operations can be found in *Process Acceptable Knowledge Summary Report for Chloride Operations at TA-55* (TWCP-AK-2.1-002).

The overall goal of the chloride operations is to recover plutonium from scrap and residues and produce a purified plutonium oxide for conversion to metal. The primary feed sources are plutonium residues from pyrochemical operations, PuBe neutron sources, analytical laboratory solutions, and residues from other DOE facilities. Chloride operations can be broken down into the following process steps:

plutonium-beryllium

- pretreatment
- dissolution
- purification
- hydroxide precipitation

Pretreatment may include sorting, crushing, and/or pulverizing feed materials prior to being fed into later steps of chloride operations. A separate pretreatment procedure is the decladding of plutonium-beryllium sources. The PuBe metal alloy is removed from the sources,

which are then entered into the chloride line for plutonium recovery along with other materials.

In the dissolution step, hydrochloric acid is used to leach and dissolve plutonium from scrap, crucibles, residues, and various solutions, including solutions from the analytical chemistry laboratory. Enriched solutions undergo further purification (see next paragraph), and solid wastes are discarded as debris waste or sent to cement fixation.

Purification steps may include solvent extraction, ion exchange, and oxalate precipitation, depending on the chemical nature of the material to be purified. Ion exchange columns are used to collect plutonium and separate out impurities. Enriched solutions may be further treated with oxalic acid to precipitate plutonium oxalate, which is converted to plutonium oxide.

Insert sentence from page 10

In the hydroxide precipitation step, plutonium in solutions from purification steps is precipitated with potassium, magnesium, or sodium hydroxide. The resulting enriched hydroxide cakes become feed material for nitrate operations, and liquid meeting the TA-50 WAC is sent to the RLWTF using the caustic waste line. Some hydroxide cakes are returned to the dissolution step for re-processing.

3.5.5 Miscellaneous Operations

P/S codes AC, AC1, AC2, AC3, ACL, AD, APD, AX, CK, CV, EDC, EOC, EXT, FDL, FLU, HRS, IB, ICP, IE, LI, LIBS, ME, NCD, RASS/RSS, RD, SA, SMP, SO, STF, VS, WM, X0, XES, XO, XP

A detailed description of miscellaneous operations can be found in *Process Acceptable Knowledge Summary Report for Miscellaneous Operations at TA-55* (TWCP-AK-2.1-004).

Research and development projects at TA-55 include an array of activities involving applied techniques and methods designed to study and improve processes associated with the purification, separation, extraction, recovery, and characterization of actinides (primarily plutonium) from various matrices. General types of miscellaneous processes are described below.

Extraction/Separation Studies. A series of similar actinide extraction, separation, and characterization R&D studies involved processing of actinide hydroxide cakes from chloride and nitrate operations, development of sensors and instrumentation for online chemical analysis, and purification process development. The process R&D activities were of a non-routine developmental nature involving

research, process development, small scale "trouble-shooting," and occasionally preparation of various isotopes and isotopic mixtures of plutonium, uranium, americium, and neptunium.

Halogenation Studies. A variety of R&D efforts used fluorinating agents to fluorinate samples containing plutonium residues. A gas flow loop was used to pass a fluorinating agent through a gas-solid reactor where plutonium in the solid residue reacted chemically to form solid PuF_4 or gaseous PuF_6. Gaseous PuF_6 was trapped in a cold trap, distilled, and reduced to PuF_4. Separation operations involving experimental chlorination processes were similar to the fluorination procedures. A gas loop was used to flow carbon tetrachloride and perchlorocarbons through a gas-solid reactor to chlorinate plutonium oxides to form recoverable plutonium compounds.

Non-Aqueous Dissolution/Extraction Operations. Non-aqueous dissolution/extraction operations included the dissolution of actinide compounds and actinide-containing matrices in superacid media. The superacid solutions were evaporated to leave solid products that were analyzed by a variety of methods. The study of the organometallic chemistry of uranium and thorium in non-aqueous solvents consisted of a variety of small-scale organoactinide operations involving fundamental research of the synthesis in non-aqueous media of new actinide compounds, their characterization and reaction chemistry, and application to existing actinide processing technology. Other operations comprised a broad range of laboratory activities in support of fundamental and applied actinide chemistry research, including preparation of solvents and reagents, synthesis of new chemical compounds, and characterization and analysis of new chemical compounds using wet chemistry methods and analytical instrumentation.

Analytical Operations. This category covers all analytical techniques performed ~~in~~ of the Plutonium Facility Room 124. Processes involve analysis of plutonium and americium, RCRA metals, and trace metals. Originators provide samples, which are prepared for further analyses, ~~(e.g., ICP and XES)~~ such as inductively-coupled plasma (ICP) and X-ray energy spectroscopy (XES). Unused liquid samples are returned to the originator, sent to radiochemistry for counting, or sent to recovery operations.

R&D Efforts. Several small-scale R&D efforts primarily focused on plutonium recovery included the following activities:

- Fluoride sintering of PuO_2 took advantage of the presence of fluoride to aid the formation of a sintered mass of PuO_2 powder at temperatures above 700 °C.

- Chlorination of Pu oxides involved oxides with tantalum chips from Rocky Flats Environmental Technology Site (RFETS). Chlorination was used to recover plutonium from potassium chloride and sodium chloride matrices.
- Processing of molten-salt extraction (MSE) salts generated at LANL and RFETS.
- Recovery of plutonium from ash involving plutonium/thorium oxide mixtures.
- Processing of neptunium oxide and metal was performed to remove the protactinium daughter in order to use the neptunium for ~~non-destructive assay~~ (NDA) standards.

Measurement/Detection Operations and Studies. P/S code VS involved the inspection of oxides and metals. Materials were retrieved from the vault, brought to the glovebox, inspected and sampled if necessary, then repackaged and returned to the vault. Assay methods include XES, laser-based spectroscopy, and other spectroscopic ~~approaches~~ techniques. Electron microscopy may be conducted on actinide samples in the future. In addition ~~Besides~~ to elemental and isotopic analyses, other measurement studies are

- ~~P/S code XES is a plutonium assay technique in which samples containing plutonium are excited with X-rays, and the resulting emission spectra are measured to determine plutonium concentrations.~~
- ~~P/S code RASS involves interrogating small samples (solids or solutions containing less than 1 gram of nuclear material) using laser-based spectroscopy.~~
- ~~P/S code LIBS used a laser for isotopic analyses of samples of high purity metals and oxides.~~
- ~~P/S code SMP has "never gone hot" but may start up in the near future. The process will involve mounting samples of plutonium metal and stainless steel using a low-melting bismuth-tin alloy in preparation for electron microscopy.~~
- ~~P/S code EOC is an experiment~~ designed to calculate the surface area and pore size distribution of a sample and to analyze its surface characteristics. ~~Mixtures of helium and nitrogen are passed through a U-shaped cell containing a sample to be analyzed.~~
- ~~P/S code HRS involved spectroscopic studies. Fluorinated actinide compounds were introduced with compressed gases into a long-path, variable temperature cell for spectroscopic measurement and in preparation for physical chemistry.~~

Pyrochemical Matrix Studies. A pyrochemical matrix study was conducted from 1986-1992 and involved rod milling prior to screening. This process had two objectives: (1) blending large batches of homogeneous plutonium metal oxides ~~(up to 85 percent purity)~~ for pyrochemical operations, and (2) dissolution of ~~78 percent pure (or greater)~~ plutonium metal oxides for nitrate operations. The process changed in August 1992 when a need developed to blend oxides to provide feed material for making NDA standards. In February 1995 the process again changed, with the objective of determining the effect of pyrochemical salt matrices on the accuracy of NDA measurements. Process activities involved crushing, pulverizing, blending, roasting, and sieving pyrochemical salts. The results were used to determine handling and processing of the salts and for correction of bias measurements. The feed material consisted of high-purity oxides to use in the fabrication of standards to be used at LANL and throughout the DOE complex.

~~A small basic research operation that began in March 1992 explored aqueous extraction of plutonium from various waste streams, particularly used pyrochemical salts.~~

Hydrothermal Processing. The hydrothermal processing procedure involves the reaction of aqueous/organic mixtures, pure organic liquids, or contaminated combustible solids (e.g., ion exchange resins, plastic filters, and cellulose rags) under supercritical conditions (i.e., high temperature and pressure). Feed streams include, but are not limited to, carbon tetrachloride, tributyl phosphate, and organic solvents. Process effluents are gases, liquids and salts. Organic components are oxidized to carbon dioxide. Nitrate contaminants are converted to nitrogen gas and some nitrous oxide. Components such as chlorine, sulfur, and phosphorus are oxidized and converted to acids or salts. Gases are liberated; solids and liquids are collected for recovery or disposal.

Electrochemistry Experiments. Electrochemistry methodologies were designed to decontaminate items, replace processes that produce large amounts of waste, or enhance chemical reactions. The process involved uranium decontamination of disassembled weapon components from various sites with various levels of surface contamination with plutonium. The operation was strictly an aqueous process in which an alkaline solution was reacted with the components to precipitate uranium. Significant amounts of metal could be stripped in a short period. The solution containing the precipitated uranium salts was then dried for mass balance.

Metallography. The purpose of the metallography operation is to characterize the microstructure of metallic or ceramic pieces to verify

be low-level waste and no RCRA constituents would be associated with the waste items.

P/S code XO indicated waste materials that were generated within specific rooms but could not be associated with an individual P/S code in that room.

3.5.6 Special Processing

P/S codes ACC, ACD, DO, IAM, IX, PI, POSM, PPD, PX, RM, SB, SBB, SL, and VU

A detailed description of special processing is found in *Process Acceptable Knowledge Summary Report for Special Processing at TA-55* (TWCP-AK-2.1-007).

Special Processing includes processing operations for Material Type (MT) 42, and research and development (R&D) activities for MT 52. (See Section 3.6.2 and Table 2 for descriptions of plutonium material types.) Because processing MT 42 is a smaller scale version of the recovery processes used for MT 52, MT 42 processing has five main recovery steps:

- head-end operations
- nitrate ion exchange operations
- chloride ion exchange operations
- separation and purification by precipitation
- pyrochemical processes

Only head-end operations and separation by purification and precipitation are covered here, since nitrate ion exchange operations, chloride ion exchange operations, and pyrochemical processes are covered briefly elsewhere in this report.

Head-end operations leach tools, labware, crucibles, rags, etc., in nitric acid to remove recoverable plutonium. Plutonium oxide is typically calcined as part of head-end operations.

Separation and purification by precipitation is a method of plutonium removal from aqueous solutions. The most common precipitation methods utilize oxalate, hydroxide, and peroxide anions. By selectively precipitating the plutonium, many of the metals remain in solution, thereby purifying the plutonium.

All wastes generated by MT 52 R&D operations are replicated for MT 42, but carry different P/S codes to differentiate and identify the

radionuclide content of the waste. Outputs from Special Processing include high purity metal for casting and machining.

3.5.7 Metal Operation Processes

P/S codes AO, ARI, BA, BC, BT, CA, CN, CO, CT, DA, DOP, DT, EL, ELW, EM, EVAC, FF, FSPF, GI, HG, ID, IN, ITF, ITF4, ITF7, JA, KBTF, MA, MBC, MOX, MW, OB, OM, PCH, PD, PE, PF, PH, PIG, RAP, RAP2, RL, RS, SRL, TIGR, UA, VD, WE, WLT

A detailed description of metal operation processes is found in *Process Acceptable Knowledge Summary Report for Metal Operation Processes at TA-55* (TWCP-AK-2.1-003).

The processes included in metal operations can be divided into three groups:

- reactor fuel development processes
- on-going metal operation processes
- developmental metal operations

The main goal of metal processes is to take the high purity metal produced by pyrochemical operations and produce shaped metal pieces.

make these a single ¶

In reactor fuel development, enriched uranium oxide, depleted uranium oxide, and/or plutonium oxide feeds are blended and mixed with graphite, and various operations are performed to convert the feed material into pellets that can be used for fuel. Testing and R&D are done on the fuel pellets. ~~Trichloroethylene was used as a lubricant from 1979 to 1994.~~

On-going metal operation processes include various R&D activities, alloy development, casting of metals, welding, coating, and machining/metalwork on various metals. ~~In machining, trichloroethylene was used from 1979 to 1992 and from 1997 to the present, for final cleaning. In alloy development, Freon was used from 1989 to 1992 to clean parts. The plutonium sputtering process used arsenic for a short period during 1984 to 1985.~~

Developmental metal operations include the Advanced Recovery and Integrated Extraction System (ARIES) project, assembly operations, burst testing of shells, experimental laser welding, furnace operations, and various other experimental activities. ~~Waste from burst testing, conducted from 1998 to the present, contains lead. Waste from the Kolsky Bar Test Facility also contains lead and/or lead oxide.~~

3.5.8 Pyrochemical Processes

P/S codes CRD, ER, MO, MP, Neptunium, OR, PK, PTP, RA, SCB, SD, SS, and SSMD

A detailed description of pyrochemical processes is found in *Process Acceptable Knowledge Summary Report for Pyrochemical Processes at TA-55* (TWCP-AK-2.1-006).

Pyrochemical processes include metal preparation, metal purification, and ancillary metal production operations. Pyrochemical process outputs are most often high purity metals for metal operations.

3.5.8.1

Metal preparation processes include the following operations:

Metal Preparation Line. The metal preparation line produces plutonium metal from fluoride salts. Hydrogen fluoride gas reacts with plutonium oxides obtained from calcination of oxalate or peroxide precipitates from the aqueous nitrate or chloride process lines. The plutonium compound is further reacted with various chemicals to produce plutonium metal, which can then be recovered as a button by breaking the crucible.

Direct Oxide Reduction (DOR) ~~and~~ Multiple-Cycle Direct Oxide Reduction (MCDOR). In the single pass DOR process, plutonium oxide and calcium metal are reacted in molten calcium chloride ($CaCl_2$) or $CaCl_2$ mixed with calcium fluoride (CaF_2), to produce plutonium metal. The reaction is conducted in a magnesium oxide (MgO) crucible. After cooling, a plutonium metal button is removed by breaking the crucible. A layer of salt above the button contains unreacted oxide and metal shot, which was sometimes recovered by addition of fresh salt plus additional calcium metal.

To minimize the salt waste, the multicycle DOR (MCDOR) process was started, in which the molten salt is regenerated by sparging the $CaCl_2$-CaO mixture with chlorine gas between multiple plutonium metal production runs. After approximately five cycles of metal production, the mixture is cooled and the salt and metal phases are separated.

3.5.8.2

Metal purification processes include the following:

Molten Salt Extraction (MSE). MSE is used to separate americium and the more reactive elements such as rare earth elements, alkali metals, and alkaline earth metals from plutonium metal (TWCP-352). This process is employed only if the americium content is greater than 1000 ppm. In the original process, which operated from 1979 to 1988, magnesium chloride ($MgCl_2$) was added to the impure plutonium metal in a molten

salt of sodium chloride (NaCl) and potassium chloride (KCl), contained in a MgO crucible and heated to 750°C. The magnesium chloride oxidized americium to $AmCl_3$, although some plutonium was also converted to the chloride salt form. In 1988, the MSE process was converted to use plutonium chloride ($PuCl_3$) produced by in-situ chlorination in a tantalum crucible. In the LANL process, 90 percent of the americium and 10 percent of the plutonium are transferred from the feed metal to the salt. After cooling, the salt and metal are mechanically separated. The salts are transferred to the salt stripping process.

Electrorefining (ER). The ER process takes impure metal from the MSE and MCDOR (DOR) processes and produces high purity plutonium metal. Impure plutonium is cast as an anode, which is then placed in a magnesium oxide crucible with a salt mixture, a metal cathode (typically tungsten), and a seeding reagent that is $MgCl_2$ or $PuCl_3$. After the anode and salt melt, current is applied to the system, and plutonium at the anode is oxidized to plutonium ions, which travel to the cathode and are reduced back to the metal state. Impurities in the original plutonium anode that are less electroactive than plutonium (including cadmium, chromium, lead, and silver) remain in the anode, while impurities more electroactive than plutonium (including barium) are left in the molten salt. After cooling, the crucible is broken and the residues are physically separated from the high purity product metal. Anode heels were sent to pyroredox from 1984 to 1986. Currently, salts are sent to chloride operations or carbonate oxidation/distillation.

From 1987 to 1989, secondary solvent metals such as cadmium, bismuth, lead, and gallium were added to experimental studies of the ER process.

3.5.8.3 Ancillary metal production operations include the following:

Salt Stripping. The MSE and ER salts are further treated by salt stripping, oxygen sparging or carbonate oxidation, and salt distillation. The salt stripping process treats the residue by melting and stirring the salt with calcium metal in a magnesium oxide crucible at 850°C. This treatment reduces the plutonium in the salt to metal and allows the metal to coalesce for physical removal and recovery. After cooling, the crucible is broken and the metal physically separated and recycled to the ER process or burned to oxide and sent back through aqueous recovery. The crucible shards are leached in hydrochloric acid, then discarded.

Oxygen sparging and, since 1996, carbonate oxidation are used to ensure that any plutonium, americium, or metallic sodium or potassium left in the salts are converted to nonpyrophoric oxide forms.

Vanadium pentoxide (V_2O_5) was used in place of carbonate to convert metals to oxide as part of the salt stripping process for a few months in 1998. Wastes that potentially contain this chemical (HWN P120) will be segregrated into waste stream lot TA-55-19A (see Section 4.0).

Salt Distillation. Salt distillation ~~begun in 1997,~~ allows the recovery of plutonium oxide from the chloride salt and produces purified chloride salt for reuse.

Pyroredox. The pyroredox operation was used to recover plutonium from spent anode heels in the mid- to late 1980s. The anode heel was polished with calcium metal to remove surface oxide, then oxidized to plutonium (III) with zinc chloride ($ZnCl_2$) in molten KCl, forming plutonium chloride ($PuCl_3$). Elements more electroactive than zinc (including barium) were oxidized into the salt phase, and the zinc formed a metal button. The salt was then mixed with calcium metal in $CaCl_2$ to reduce the plutonium to the metal phase, as well as reducing all elements less electroactive than calcium. The salt phase containing small amounts of the impurity barium was mechanically separated from the metal phase and discarded. The metal phase containing zinc was placed in the vault or further treated, and the plutonium eventually was routed back to ER.

Ingot Casting. Metal is melted in a MgO crucible to cast the ingot.

Metal Coalescence. Metal coalescence is used for plutonium turnings to coalesce the turnings into a metal button. Calcium metal and $CaCl_2$ are added to a MgO crucible along with the turnings and melted.

Metal Oxidation. Small pieces of metal remaining on furnace or crucible surfaces are collected for conversion to the oxide phase. These metal pieces are placed in a furnace for the conversion process. The oxide is then transferred to the vault.

Neptunium. A campaign to work off neptunium residues stored in the vault was undertaken in 1993 and was only active that year.

Pickling. Pickling (i.e., leaching metal with a strong acid) is typically a head-end operation. After a few furnace runs, plutonium metal begins to accumulate on tools and furnace parts. It then becomes necessary to leach the plutonium from these items. In addition, after calcium metal reduction processes such as metal preparation, direct oxide reduction, and molten salt extraction, plutonium metal will have an adherent skin of calcium metal. Hydrochloric acid is used to dissolve Pu from tantalum furnace parts, and nitric acid is used to pickle Pu from other metals.

Plutonium Trichloride Preparation. An intermediate process in Pu metal production prepared plutonium trichloride by bubbling a carrier gas (chlorine) through carbon tetrachloride and passing the mixed gas stream through a bed of plutonium oxide at 500 °C–600 °C before being absorbed in a 5–6 molar potassium hydroxide solution. The carbon tetrachloride was broken down into phosgene, carbon monoxide, and carbon dioxide gases in this process, which was active between January 1987 and June 1989, at which time the process switched to the use of phosgene gas until the process ended in May 1991. Feed material was high purity oxides from the vault or from other P/S codes. The product plutonium trichloride was reduced to metal by the MSE or ER processes.

3.6 Material Inputs to the Waste Generation Processes

Material inputs to the waste generation processes derive from three general sources: (a) feed material, (b) chemical use, and (d) ancillary material inputs such as those related to the use of laboratory equipment and materials and glovebox maintenance activities. The feed materials for TA-55 processes that generate waste in waste streams TA-55-19 and TA-55-20 consist of the general types of materials listed in Table 1 that are obtained either from the storage vault, as process output from various P/S codes, or from sources outside TA-55, including other DOE facilities. ~~Chemical use is discussed in Section 3.6.3. Material waste form inputs are discussed in Section 3.6.1. Radionuclide inputs are discussed in Section 3.6.2.~~

3.6.1 ~~Physical Waste Form Identification~~

Plutonium-processing facilities generate contaminated combustible debris waste from:

- Plastic materials that result in combustible waste such as Tygon tubing, polyvinyl chloride vials, plastic bags, old bag-out stubs, etc.
- Cellulose-based cleaning aids and personal protective equipment such as rags, paper wipes, laboratory coats, coveralls, booties, etc.
- Rubber and Teflon-based products used in the operations, such as rubber gloves, Teflon tape, gaskets, stoppers, etc.

~~Waste items from several different processes were segregated by physical waste form (e.g., combustible debris, metal, glass, etc.) and packaged into waste containers~~. The physical description of each waste item generated was documented on a Waste Origination and Disposition Form (WODF) by the waste generator according to controlled procedures. The P/S code for many waste items is also documented on this form, although recording of P/S codes was spotty before about 1990.

- ~~Occasionally, leaded gloves rubber waste items gloves and aprons~~
- Prior to 1987, leaded rubber gloves .... [copy from ~~process AK reports~~ if email if I sent it to you, Re: Global edit to AK reports: leaded gloves]

These include ~~analytical labs~~

solid feed, such as

purification — anode heels, crucible pieces, hydroxide cakes, MSE salts

intermediate steps in processes — oxalates, oxides, etc

reworking pure feeds such as metal or metal alloys

recycling — disassembled weapons components, Pu bearing sources

recovery ~~operations~~ from a wide variety of matrices contaminated ~~matrices~~ above the DL

ash, ~~from~~ solutions

experimental R&D

These feed materials fall into ~~five~~ four general categories:

① • pure Pu to be recycled ~~or Pu~~ from pits and ~~such~~ sealed sources ~~or to be reworked~~

~~reworking of pure Pu metals or alloys to be reworked~~ into desired ~~for~~ shapes ~~or~~ ~~for~~ chemical forms

② • intermediate Pu products ~~steps~~ in Pu purification processes, such as solutions, oxides, hydroxides, salts, or anode heels

③ • ~~recovery of Pu from~~ a wide variety of ~~Pu contaminated~~ matrices ~~contaminated~~ contaminated with Pu above ~~the~~ the DL, such as ash, equipment and solutions

④ • experimental R&D feed

Table 1. Feed Materials for Processes Contributing to Waste Streams TA-55-19 and TA-55-20

Feed Material	Potential Presence of RCRA-Regulated Substances	P/S Codes, Listed by Process
Analytical laboratory solutions	Potentially contaminated with RCRA-regulated constituents • All analytical laboratory solutions are potentially contaminated with chromium (D007), lead (D008), and mercury (D009) • CLS-1 solutions potentially contaminated with mercury (D009) and lead (D008), as well as RCRA-listed organic substances used as solvents, including acetone (F003), butyl alcohol (F003), carbon tetrachloride (D019), chlorobenzene (F002, D021), chloroform (D022), methanol (F003), methylene chloride (F002), tetrachloroethylene (F002, D039), xylene (F003) (CI-25/TWCP-3547).	Chloride operations: CLS, CW, CXL (analytical laboratory solutions from CLS-1); CSE, SE (other solutions) Miscellaneous operations: ACL, ICP Nitrate operations: CF, HP
Anode heels spell out cadmium (D006), chromium (D007), lead (D008), and silver (D011).	Typically contaminated with RCRA-regulated heavy metals ~~Cd, Cr, Pb and Ag (D006, D007, D008, D011)~~. Heavy metals ~~As, Hg, and Se~~ are not present because they are volatilized from the Pu oxide feed at the high temperatures to which this material is subjected in P/S codes ER, RM, and SS (electrorefining step).	Nitrate operations: AS, BF, BU Pyrochemical processes: RA arsenic (D004), mercury (D009), and selenium (D010)
Ash from P/S codes ETD, IS, SB, TDC, or from other DOE facilities spell out	Usually suspect contaminated with Ba, Cd, Cr, Pb, and Ag (D005, D006, D007, D008, D011). As, Hg, and Se may also be present although these metals are volatilized at high temperatures if present in the oxide and chloride forms.	Miscellaneous operations: CK, CV, FDL, FLU, SO, XP Nitrate operations: AL, AT, ATL, ED, HGMS, IS, MPD, PTS, RC, SC Special processing: ACD, IAM, SB, SL
Crucible pieces (tantalum, magnesium oxide)	Typically fairly pure, no RCRA substances present	Chloride operations: CL Nitrate operations: MAS, SC Special processing: ACD, SL
Disassembled weapons components (pit diassembly)	High-purity Pu and U material types, no RCRA substances present	Metal operation processes: ARI, CA, PH, SRL Miscellaneous operations: EDC Nitrate operations: BM, RB, RBJ
Experimental R&D feed materials; various isotopes and isotopic mixtures of actinides in various matrices	Variable purity	Miscellaneous operations: AD, CV, EXT, HRS, RASS, SA, XES, XP Nitrate operations: MAS

Feed Material	Potential Presence of RCRA-Regulated Substances	P/S Codes, Listed by Process
Hydroxide cakes (process output from P/S codes CLS, CW, CXL, DO, POSM, PRR)	Typically contaminated with RCRA-regulated heavy metals Cd, Pb, Hg, Ag and possibly Cr (D006, D008, D009, D011, and D007) spell out	Miscellaneous operations: AD Nitrate operations: CD, HCD, HD, LG2 Special processing: DO, POSM
Miscellaneous materials contaminated with Pu (e.g. sand, slag, tools, crucibles, metal, glass, plastic, labware, scrap, rags, glovebox sweepings, pump oils, HEPA filters)	May be contaminated with RCRA-regulated heavy metals Ag, Cd, Hg, Pb and possibly Cr (D006, D008, D009, D011, and D007) spell out Silver Cadmium	Miscellaneous operations: APD Nitrate operations: ATL, BAC, CPOD, CR, ED, ETD, GMS, HGMS, IS (combustible material), LG1 (non-combustible material), MAG, MAS, MELL (cellulosic material), ML (metal equipment), NC (non-combustible material), NL (non-combustible material), PA (glovebox sweepings), PAF, RO (organics), SC, SP, TDC (cellulosic material), VC, ZD Pyrochemical processes: PK (hardware, metal, anode chips from other P/S codes) Special processing: ACD, DO, SB, SL
MSE salts	Typically fairly pure, suspect contaminated with barium but no other RCRA substances present (D005)	Chloride operations: MB, MS Miscellaneous operations: XP Nitrate operations: MB, PS
Neptunium residues from vault	No RCRA-regulated substances	Pyrochemical processes: Neptunium (only active in 1993)
Pu chlorides and fluorides	Variable purity	Miscellaneous operations: FDL, SO Pyrochemical processes: ER, SD, SS Special processing: RM
Pu metal or metal alloy from vault or from various P/S codes	High purity, no RCRA-regulated substances, unless noted otherwise	Metal operation processes: AO, ARI, BC, BT, CA, DA, ELW, EVAC, FSPF, ITF, ITF4, JA, KBTF, MA, MBC, MW, PCH (variable purity), PD, PE, PF, PH, RL, SRL, VD, WE, WLT Miscellaneous operations: AC, AC1, AC2, EXT, LIBS, ME, SA, SMP, VS Nitrate operations: ATL, BM, BU, MF, PAF, VP1 Pyrochemical processes: CRD (variable purity), MO, SCB, SS, SSMD Special processing: ACC (variable purity), PI (variable purity), PPD, POSM, RM, SB

Feed Material	Potential Presence of RCRA-Regulated Substances	P/S Codes, Listed by Process
Pu oxalates	Typically fairly pure, no RCRA substances present	Nitrate operations: CC, DF, HC
Pu oxides	Variable purity from P/S codes RB, RBJ and others, and from the vault; suspect contaminated with RCRA-regulated heavy metals Cd, Cr and Pb (D006, D007, D008) High purity oxides from P/S codes CA, DO, and MA, and from the vault spell out	Metal operation processes: DOP (high-purity Pu and other radionuclides as oxides) Miscellaneous operations: CK, CV, EOC, EXT, FDL, FLU, IB, IE, LI, LIBS, SO, STF, VS, XP Nitrate operations: ATL, BL, CH, CPOD, DP, ED, FC, LC, MPD, OD, PT, RB, RBJ, SP, SSD, UPS, US, US2 Pyrochemical processes: MP (generally high purity), OR (variable purity), PTP Special processing: DO, PI, PX, POSM, RM
Pu-Be sources	High purity constituents, no RCRA-regulated substances	Chloride operations: PB, PUB
Pyrochemical (~~processes/chemical~~) salts	Typically fairly pure, no RCRA substances other than ~~Ba~~ barium (D005) are present	Chloride operations: MB, MS, PRR Miscellaneous operations: EXT, IB Nitrate operations: COD, COL, MB Special processing: DO
Reactor fuel pellets	High purity Pu and U material types, no RCRA-regulated substances	Metal operation processes: ME
Stainless steel and/or tantalum residues from decladding of Pu-Be sources	High purity metals, potential leaching of chromium (D007) from stainless steel if subjected to strong acid	Chloride operations: PUB

TRU waste drums containing one or more waste items were packaged by the Nuclear Material Technology Group (NMT-7) according to procedures referenced in the applicable version of the TA-55 Attachments to the Certification Plan (TWCP-697). Sample attachments are referenced as TWCP-701 (for 1987) and TWCP-700 (for 1995). In the packaging process, a standard form, the Discardable Waste Log Sheet (DWLS), was used to list each ID code and record its matrix material. This form was signed by the waste packager and approved by quality assurance personnel.

?

move all this to section 3.2.2

Both the WODFs and DWLS for each TRU waste drum have been maintained as hard copy records by the generator. For waste stream TA-55-19, example copies of these container records (for combustible debris) are included in Attachment 4. Note that this waste container (LA00000056636) contains waste items generated by three different P/S codes (CXL, ED, and SC), each with its own completed WODF.

3.6.2 Radionuclide Content Identification

The primary Pu material type inputs for ~~metal operation~~ TA-55 processes ~~at TA-55~~ are listed in Table 2. The designation *material type* (e.g., MT 52) is used within the DOE Complex to describe the isotopic composition of common blends of radioactive materials used within the Complex. The material type notation was developed because it is a convenient way to describe material types that have very consistent isotopic compositions. Table 2 indicates the isotopic composition of the material types at the time the waste was characterized. (see Section 14).

The material type provides the basis for estimating an upper bound for U-234, U-235, and Am-241 contents based on the rate of decay of their precursors, Pu-238, Pu-239 and Pu-241, respectively. The purpose of such ~~these~~ bounding calculations is to provide a basis for identifying significant enrichment or depletion of one radionuclide versus another, based on radioassays of individual waste containers. The results of these calculations are ~~also~~ tabulated in the last three columns of Table 2. ~~assuming~~ (a) none of these isotopes were initially present in the material, (b) the oldest Pu material in inventory dates back to 1 January 1960, and (c) the waste was packaged on 1 January 1996, making it 36 years old at that time (TWCP-698).

stet
Comma
, and assume that:
~~It was assumed that~~

2000
36
64

TA-55 processes are not expected to alter the Pu isotopic ratios of the feed material. The material type used in the process generating each waste item was documented on the WODF and DWLS (examples shown in Attachment 4). However, other radionuclides will be present in most of the process wastes from decay of a Pu precursor or as a contaminant in the feed material:

Table 2. Average Isotopic Content of Plutonium Material Types and Enrichments

Material Type (MT)	Plutonium Isotope (Weight %) and Half-Life						Upper Bounds for Dimensionless Weight Ratios[a]		
	Pu-238 (87.74 yr)	Pu-239 (24120 yr)	Pu-240 (6564 yr)	Pu-241 (14.35 yr)	Pu-242 (376,300 yr)	Pu-244 (8.26 x 10^7 yr)	U-234/ Total Pu	U-235/ Total Pu	Am-241/ Total Pu
MT 51	0.006	96.77	3.13	0.076	0.018	—	1×10^{-5}	0.001	0.0006
MT 52	0.01	93.78	6	0.2	0.02	—	2×10^{-5}	0.001	0.002
MT 53	0.03	91.08	8.45	0.366	0.071	—	7×10^{-5}	0.0009	0.003
MT 54	0.046	87.42	11.5	0.81	0.22	—	0.0001	0.0009	0.007
MT 55	0.06	83.88	14.73	1.03	0.304	—	0.0002	0.0009	0.009
MT 56	0.061	81.9	16.51	1.18	0.355	—	0.0002	0.0009	0.01
MT 57	0.433	74.63	20.7	2.55	1.69	—	0.001	0.0008	0.02
MT 42									
84%	1.02	1.37	10.32	3.13	84.14	0.02	0.003	1×10^{-5}	0.03
90%	0.72	1.26	6.4	1.86	89.77	—	0.002	1×10^{-5}	0.02
95%	0.45	0.56	2.47	0.906	95.58	0.029	0.001	6×10^{-6}	0.008
MT 83									
83%	83.89	13.8	1.9	0.32	0.09	—	0.26	0.0002	0.003
89%	89.26	10.07	0.633	0.021	0.015	—	0.28	0.0001	0.0002

[a] These ratios are calculated under the assumption that no chemical fractionation occurs and, hence, are intended to be used to identify fractionation when it is present by comparing these upper bounds to radioassay data.

Source: TWCP-698

Where is Table 3. Average Isotopic Content of Uranium Material Types and Enrichments ?

Also the sentence refering to this table
See following page excerpted from earlier draft

Probably was accidentally marked as strike-out — check if still there in the ~~file~~ document but just hidden from view as a deletion

from earlier draft

Table 2. Average Isotopic Content of Plutonium Material Types and Enrichments

Material Type (MT)	Plutonium Isotope (Weight %) and Half-Life						Upper Bounds for Dimensionless Weight Ratios[a]		
	Pu-238 (87.74 yr)	Pu-239 (24120 yr)	Pu-240 (6564 yr)	Pu-241 (14.35 yr)	Pu-242 (376,300 yr)	Pu-244 (8.26 x 10^7 yr)	U-234/ Total Pu	U-235/ Total Pu	Am-241/ Total Pu
MT 51	0.006	96.77	3.13	0.076	0.018	—	1×10^{-5}	0.001	0.0006
MT 52	0.01	93.78	6	0.2	0.02	—	2×10^{-5}	0.001	0.002
MT 53	0.03	91.08	8.45	0.366	0.071	—	7×10^{-5}	0.0009	0.003
MT 54	0.046	87.42	11.5	0.81	0.22	—	0.0001	0.0009	0.007
MT 55	0.06	83.88	14.73	1.03	0.304	—	0.0002	0.0009	0.009
MT 56	0.061	81.9	16.51	1.18	0.355	—	0.0002	0.0009	0.01
MT 57	0.433	74.63	20.7	2.55	1.69	—	0.001	0.0008	0.02
MT 42									
84%	1.02	1.37	10.32	3.13	84.14	0.02	0.003	1×10^{-5}	0.03
90%	0.72	1.26	6.4	1.86	89.77	—	0.002	1×10^{-5}	0.02
95%	0.45	0.56	2.47	0.906	95.58	0.029	0.001	6×10^{-6}	0.008
MT 83									
83%	83.89	13.8	1.9	0.32	0.09	—	0.26	0.0002	0.003
89%	89.26	10.07	0.633	0.021	0.015	—	0.28	0.0001	0.0002

superscript

(a) These ratios are calculated under the assumption that no chemical fractionation occurs and, hence, are intended to be used to identify fractionation when it is present by comparing these upper bounds to radioassay data.

Source: TWCP-698

The primary uranium material type inputs for reactor fuel development activities and for pit disassembly at TA-55 are listed in Table 3.

Table 3. Average Isotopic Content of Uranium Material Types and Enrichments (Weight %)

Material Type	U-234	U-235	U-236	U-238
MT 12	0.0015	0.23	0.008	99.77
MT 35	0.36	37.6	0.14	61.9
MT 36	0.63	62.44	0.18	36.75
MT 38	1.03	93.04	0.41	5.53
MT 39	1.32	97.52	0.17	0.99

Source: TWCP-698

Insert ②

- Np-237, the decay product of Am-241 (half-life, 458 yr), is expected to be present mostly in minor amounts in most debris waste from processes at TA-55.

- In general, uranium and its isotopes are expected to be present only at trace levels, if at all, if the feed material did not purposely contain uranium.

- U-235 ingrowth from the decay of Pu-239 (half-life, 24,120 years) would be negligible due to the long half-life of Pu-239.

- U-234 would be present in MT 83 (and to a lesser extent in other Pu material types) as a decay product of Pu-238 (half-life, 87.74 years) (Table 2).

Insert 2 new bullets plus text from back

In addition, secondary radionuclides will be present in the waste due to processing of feed materials other than Pu (TWCP-698). Additional radionuclides expected to be present in each process were reviewed by a panel of experts at TA-55 and compiled in a memo according to P/S code (TWCP-882), as summarized in Table ~~3~~. 4. ~~In addition to the radionuclides previ mentioned above, this list includes~~ This list includes Am-241, Am-243, cerium (Ce)-144, curium (Cm)-244, Np-237, Pa-231, Pa-238, Pu-241, Th-230, Th-233, U-235 and U-238 ~~and U-238~~ During TWCP characterization, the contents of each waste package undergo non-destructive analysis to provide detailed radioisotopic data. These data will be used to evaluate the accuracy of AK information in accordance with *Waste Characterization Data Reconciliation with Acceptable Knowledge* (TWCP-DTP-1.2-064). The results of these assay results are summarized in Section 14.2.

3.6.3 Chemical Content Identification

Chemical contents of process inputs and outputs were compiled from chemical lists contained in procedures reviewed during the process AK search and from subject matter expert (SME) input. Individual process AK reports contain detailed assessments of these chemical inputs, and of the applicability of EPA HWNs. In this section, discussion of chemical inputs are divided into the following categories:

- Acids and bases
- Gases and cryogenic fluids
- Metals
- Inorganic chemicals
- Organic chemicals

(*) • Protactinium (Pa)-241, ~~may be present~~ the alpha-decay daughter of U-235, is expected to be present in trace amounts in some TA-55 wastes due to its widespread presence as ~~of~~ a contaminant in TA-55 operations.

• Cesium (Cs)-137, a fission product of U-235, is expected to be present at detectable levels in some TA-55 wastes, due to its widespread presence as a contaminant in TA-55 operations.

over → #1

(#1) Although they are ~~products of~~ products of U-235 fission and decay, concentrations of Cs-137 and Pa-231 are not expected to show any correlation with U-235 concentrations, or even with the presence or absence of ~~U-235~~ this isotope. The differences in valence states and chemical affinities among these elements is expected to result in substantial fractionation during several TA-55 processes, including ion exchange, ~~and~~ solvent extraction, hydroxide precipitation, dissolution, and exposure to very high temperatures.

(2) Cm-244 ~~was~~ was introduced in TA-55 operations in P/S code DOP, which began in 1988. ~~From there, mat~~ Material outputs from this process sometimes were sent to P/S codes IS or WE, but this nuclide ~~should~~ is not expected to be present in any waste generated before 1988.

SIMPLIFIED PROCESS FLOW DIAGRAM FOR METAL OPERATIONS (continued)

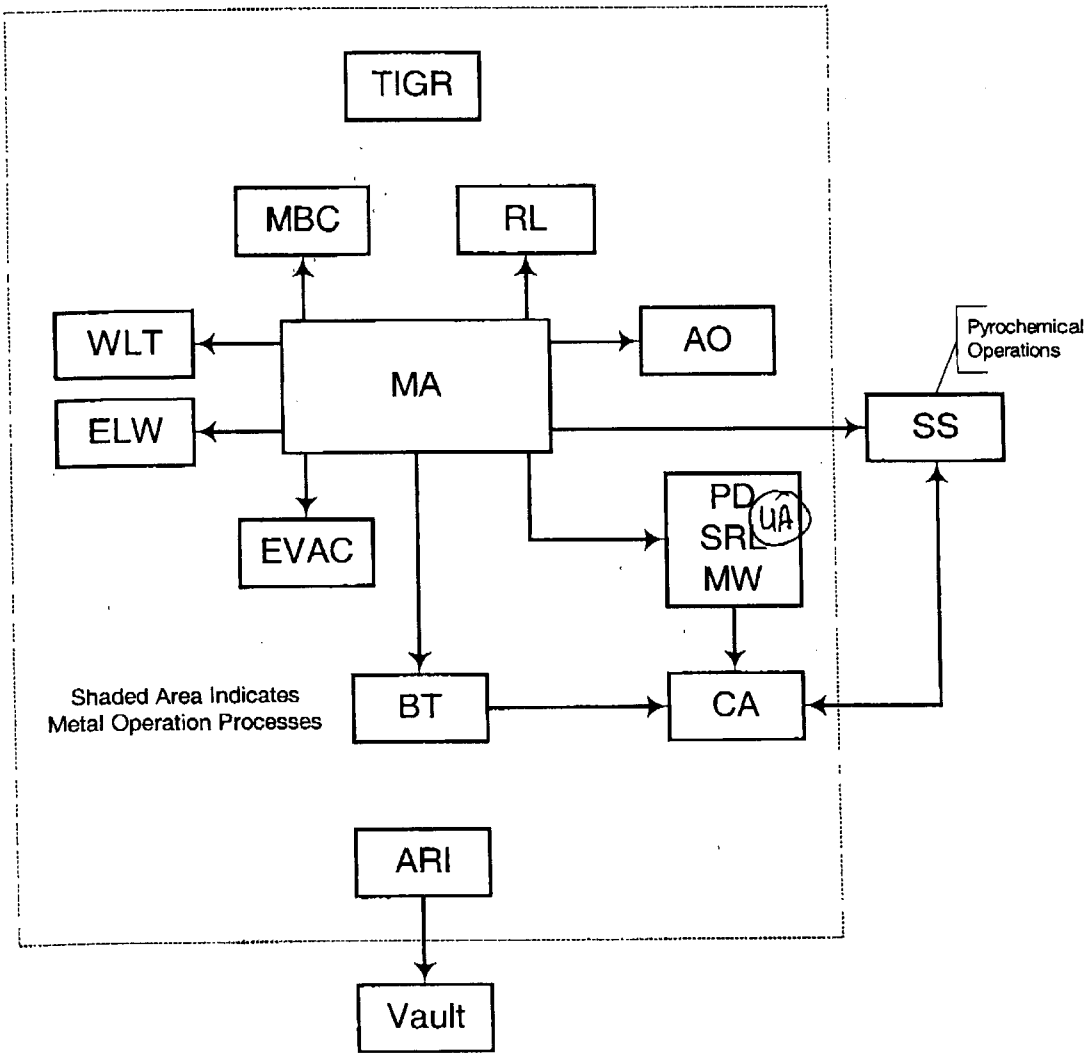

NOTE: All of these P/S codes may obtain feed material from or send product output to the vault.

NOTE: P/S code UA ~~treated~~ tracks uranium compounds from Pit Disassembly. Activities under this P/S code would be similar to those under P/S codes IN, MW and WE.

~~Also Produced U-233 detector package~~

SIMPLIFIED PROCESS FLOW DIAGRAM FOR METAL OPERATIONS (continued)

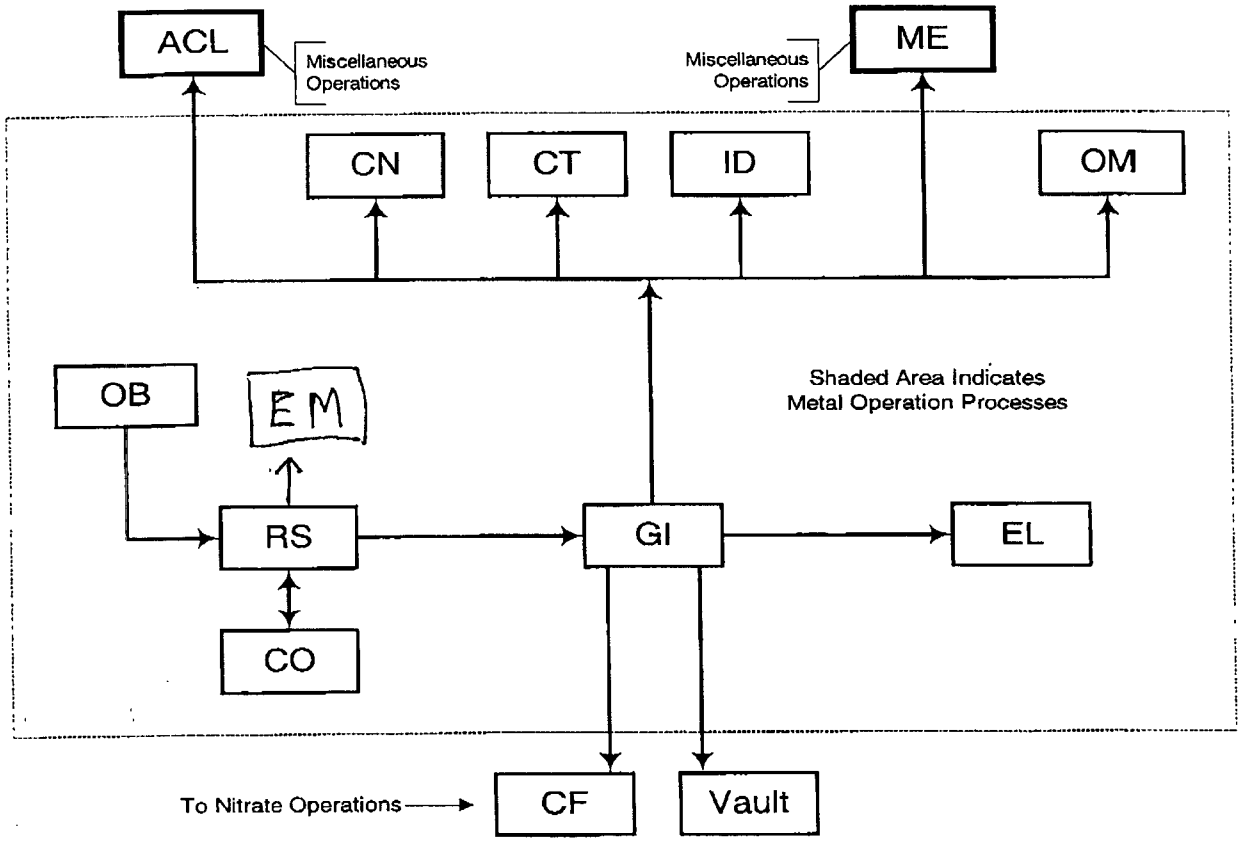

In 1988, P/S codes CO, GI, ID, OB, and RS were combined into P/S code FF. P/S codes CT, ID, and OM are statuses only, and will not generate TRU waste.

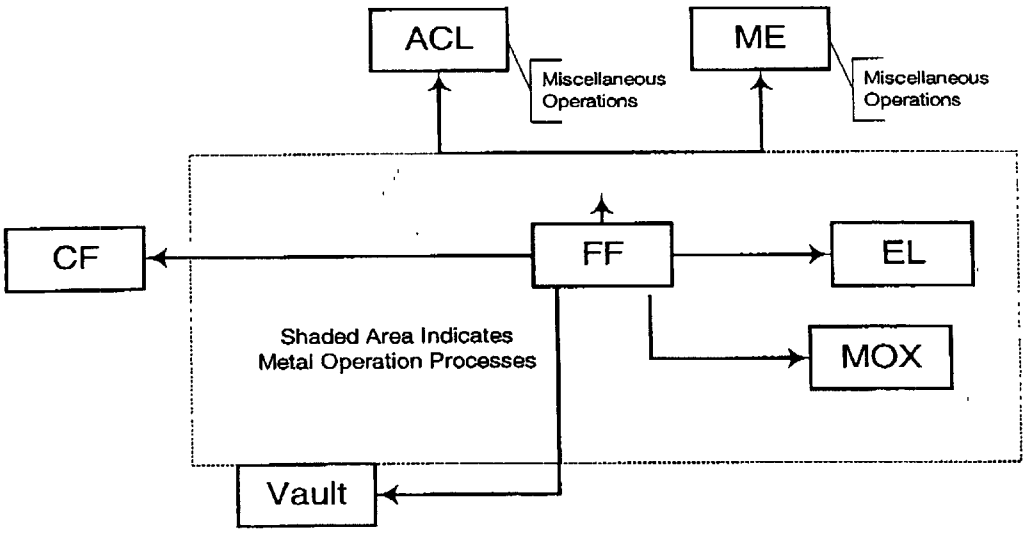

NOTE: All of these P/S codes may obtain feed material from or send product output to the vault.

Sandy's Review 5/4/01

TA-55 PLUTONIUM FACILITY
ACCEPTABLE KNOWLEDGE REPORT

REPORT TITLE: Acceptable Knowledge Summary Report for Waste Streams TA-55-19 and TA-55-20

REPORT NUMBER: TWCP-AK-2.1-008,R.2 (LA-UR-01-)

WASTE GENERATED FROM WASTE STREAMS: TA-55-19 (~~Lot~~ including TA-55-19A) and TA-55-20

EFFECTIVE DATE: _____

NEXT REVIEW DATE: _____

DOCUMENT PREPARER:

John Musgrave — 5/1/01

JOHN MUSGRAVE — DATE

APPROVALS:

Jane Fabryka-Martin — 5/1/01

INDEPENDENT TECHNICAL REVIEWER/EDITOR — DATE

SITE PROJECT MANAGER — DATE

WASTE CERTIFICATION OFFICIAL — DATE

SITE PROJECT QA OFFICER — DATE

FACILITY REPRESENTATIVE — DATE

© 2000, 2001 University of California

Section **Page**

14.0 CONFIRMATION OF AK INFORMATION FOR THE WASTE STREAM 51 50
14.1 Radiography Data 52
14.2 Visual Examination Data 55
14.3 Radioassay Data 58
14.4 Headspace Gas Data 59
15.0 CITED PROCEDURES AND REQUIREMENTS DOCUMENTS 62

Tables **Page**

1 Feed Materials for Processes Contributing to Waste Streams TA-55-19 and TA-55-20 23
2 Average Isotopic Content of Plutonium Material Types and Enrichments 27
3 Average Isotopic Content of Uranium Material Types and Enrichments (Weight %) 27
4 Secondary Radionuclides in TA-55 TRU Waste 29
5 Use of RCRA-Regulated Inorganic Chemicals in TA-55 Processes 36
6 Use of RCRA-Regulated Organic Chemicals in TA-55 Processes 38
7 Maximum Layers of Confinement to Be Used for TA-55-19 and TA-55-20 Waste Containers in the Absence of More Specific Waste Characterization Data 51
8 RTR Data for Waste Streams TA-55-19 and TA-55-20 53
9 RTR Packaging Data for Waste Streams TA-55-19 and TA-55-20 54
10 VE Data for Waste Streams TA-55-19 and TA-55-20 56
11 Radioassay Data for Waste Streams TA-55-19 and TA-55-20 57
12 Headspace Gas Data for Target Analytes in Waste Stream TA-55-19 60
13 Headspace Gas Data for Flammable VOCs, Hydrogen, and Methane in Waste Stream TA-55-19 61

Attachments

1 Acceptable Knowledge Roadmap (14 pages)
2 LANL and TA-55 Site Maps (2 pages)
3 Simplified Process Flow Diagrams (8 pages)
4 Waste Generator Forms for TRU Waste (5 pages) — Either title Att 4 or put sub listing of forms here
5 Chemical Waste Disposal Request Form (1 page)

PRQL	program required quantitation limit
P/S	process/status [code]
PuBe	plutonium–beryllium
PVDF	polyvinyldienefluoride (also known as Kynar)
QA	quality assurance
QP	quality procedure
R&D	research and development
RD&D	research, development, and demonstration
RCRA	Resource Conservation and Recovery Act
RFETS	Rocky Flats Environmental Technology Site
RLWTF	Radioactive Liquid Waste Treatment Facility
RMDC	Records Management/Document Control
RSWD	radioactive solid waste disposal
RTR	real-time radiography
Sampling Plan	*Los Alamos National Laboratory Transuranic Waste Characterization Sampling Plan* (TWCP-PLAN-0.2.7-001,R.3)
SME	subject matter expert
SOP	safe operating procedure
TA	technical area
TBP	tributyl phosphate
TOPO	trioctylphosphine oxide
TRU	transuranic
TRUCON	TRUPACT-II Content Code
TRUPACT-II	Transuranic Waste Transporter-Model II
TWBIR	Transuranic Waste Baseline Inventory Report
TWCP	Transuranic Waste Characterization/Certification Project
U	Chemical symbol for Uranium, or RCRA hazardous waste number prefix for toxic waste defined in 40 CFR Subpart D, Section 261.33(f)
UCL_{90}	90% Upper Concentration Limit
UCNI	unclassified controlled nuclear information
VE	visual examination
VOC	volatile organic compound
WAC	Waste Acceptance Criteria
WIPP	Waste Isolation Pilot Plant
WIPP WAP	Attachment B, Waste Analysis Plan, to the *Hazardous Waste Facility Permit Issued to the Waste Isolation Pilot Plant* (EPA No. NM4890139088)
WODF	Waste Origination and Disposition Form
WPRF	Waste Profile Request form
XES	X-ray energy spectroscopy

why on this list? it's in the Roadmap

Jim - this is your call.

Replace references to section 3.4... with 3.5... on this Index.

TA-55 PROCESS/STATUS CODE INDEX

P/S Code	P/S Name	AK Process Report and Primary Report Section in which P/S Code is Described*		RCRA Listings for Combustible Debris
AC	Actinide chemistry, R&D	Miscellaneous Operations	3.4.3, Att. 4	D007, D009, D011, D018, D022, D038, F002, F005
AC1	Actinide chemistry, R&D	Miscellaneous Operations	3.4.3, Att. 4	D007, D009, D011, D018, D022, F002, F005
AC2	Actinide chemistry, R&D	Miscellaneous Operations	3.4.3, Att. 4	D007, D009, D011, D018, D022, D038, F002, F005
AC3	Actinide chemistry, R&D	Miscellaneous Operations	3.4.3, Att. 4	
ACC	Ammonium chloride conversion	Special Processing	3.4.8, Att. 4	
ACD	Cascade dissolver	Special Processing	3.4.1, Att. 4	D005, D006, D007, D008, D011
ACL	Analytical chemistry laboratory	Miscellaneous Operations	3.4.4, Att. 4	D007, D009
AD	Actinide processing demonstration	Miscellaneous Operations	3.4.1, Att. 4	D004, D005, D006, D007, D008, D009, D010, D011, D019, D039, F002, F003
AL	Ash leach	Nitrate Operations	3.4.2, Att. 4	D005, D006, D007, D008, D011
AO	Assembly operation	Metal Operation Processes	3.4.3, Att. 4	
AO	Americium processing calcination	Nitrate Operations	3.4.3, 3.4.6, Att. 4	
AP	Americium purification	Nitrate Operations	3.4.3, 3.4.6, Att. 4	D007, D009
APD	Actinide processing demonstration	Miscellaneous Operations	3.4.7, Att. 4	D007, D008, D009, D019, D021, D022, D039, F002, F003
ARI	ARIES	Metal Operation Processes	3.4.3, Att. 4	
AS	Anode heel dissolution	Nitrate Operations	3.4.2, 3.4.6, Att. 4	D006, D007, D008, D011
AT	Ash testing	Nitrate Operations	3.4.2, Att. 4	D005, D006, D007, D008, D011
ATL	Advanced test line for actinide separation RD&D	Nitrate Operations	3.4.2, Att. 4	D005, D006, D007, D008, D011
AX	Solution assay	Miscellaneous Operations	3.4.3, Att. 4	D007, D009
BA	Basement isopress	Metal Operation Processes	3.4.2, Att. 4	
BAC	Bacterial decomposition of cellulose items	Nitrate Operations	3.4.2, 3.4.6, Att. 4	
BC	Physical properties	Metal Operation Processes	3.4.2, Att. 4	
BF	Unknown name for P/S code	Nitrate Operations	3.4.6, Att. 4	D006, D007, D008, D011

Stet same code

P/S Code	P/S Name	AK Process Report and Primary Report Section in which P/S Code is Described*		RCRA Listings for Combustible Debris
LG1	Non combustible leach	Nitrate Operations	3.4.2, 3.4.6, Att. 4	D006, D008
LG2	Hydroxide cake dissolution	Nitrate Operations	3.4.2, 3.4.6, Att. 4	D006, D007, D008, D009, D011
LI	XF6 experimental measurements	Miscellaneous Operations	3.4.2, Att. 4	D005, D006, D007, D008, D009, D011
LIBS	Laser-induced breakdown spectroscopy system	Miscellaneous Operations	3.4.5, Att. 4	
LR	Ion exchange	Nitrate Operations	3.4.3, Att. 4	D006, D007, D008, D009, D011
MA	Machining	Metal Operation Processes	3.4.2, Att. 4	D035, D040, F001, F005
MAG	Magnetic separation	Nitrate Operations	3.4.1, Att. 4	
MAS	RD&D experimental processes	Nitrate Operations	3.4.1, Att. 4	
MB	Nitric dissolution of molten salts	Chloride Operations Nitrate Operations	3.4.2, Att. 4 3.4.2, 3.4.6, Att. 4	D007, D008, D009
MBC	Crystal	Metal Operation Processes	3.4.3, Att. 4	
ME	Metallography	Miscellaneous Operations	3.4.10, Att. 4	D007, D040, F003
MELL	Mediated electro-oxidation of LLW	Nitrate Operations	3.4.2, Att. 4	D006, D007, D008, D009, D011
MF	Metals furnace	Nitrate Operations	3.4.1, 3.4.6, Att. 4	
ML	Non-Pu metal leach	Nitrate Operations	3.4.2, Att. 4	D006, D008
MO	Metal oxidation, room 429	Pyrochemical Processes	3.4.9, Att. 4	
MOX	Mixed oxide fuel production	Metal Operation Processes	3.4.1, Att. 4	
MP	Metal preparation	Pyrochemical Processes	3.4.1, Att. 4	
MPD	Cascade dissolver	Nitrate Operations	3.4.2, Att. 4	D005, D006, D007, D008, D011
MS	Molten salts purification dissolution	Chloride Operations	3.4.2, Att. 4	D007, D008, D009
MW	Metal working	Metal Operation Processes	3.4.2, Att. 4	
NC	Noncombustible leach	Nitrate Operations	3.4.2, Att. 4	D006, D008
NCD	Nonconfirming drums	Miscellaneous Operations	3.4.9, Att. 4	
NEPTUNIUM	Neptunium	Pyrochemical Processes	3.4.10, Att. 4	
NL	Noncombustible leach	Nitrate Operations	3.4.2, 3.4.6, Att. 4	D006, D008
NR	Nitrate recovery	Nitrate Operations	3.4.2, 3.4.6, Att. 4	
OB	Oxide blending	Metal Operation Processes	3.4.1, Att. 4	
OD	Oxide dissolution	Nitrate Operations	3.4.2, Att. 4	D006, D007, D008
OH	Hydroxide precipitation	Nitrate Operations	3.4.1, 3.4.3, Att. 4	D006, D007, D008, D009, D011

Stet

No shorter code?

P/S Code	P/S Name	AK Process Report and Primary Report Section in which P/S Code is Described*		RCRA Listings for Combustible Debris
OM	Oxygen to metal ratio determination	Metal Operation Processes	3.4.1, Att. 4	
OR	Direct oxide reduction	Pyrochemical Processes	3.4.2, Att. 4	
OY	Oxalate precipitation	Nitrate Operations	3.4.1, 3.4.3, Att. 4	
PA	Passivation	Nitrate Operations	3.4.1, 3.4.6, Att. 4	
PAF	Passivation furnaces	Nitrate Operations	3.4.1, Att. 4	
PB	Pu-beryllium source recovery	Chloride Operations	3.4.1, Att. 4	D007, D008, D009
PCH	Plasma chemistry	Metal Operation Processes	3.4.2, Att. 4	D007
PD	Pit disassembly	Metal Operation Processes	3.4.2, Att. 4	
PE	Sputtering process	Metal Operation Processes	3.4.2, Att. 4	D004
PF	Plutonium surfaces	Metal Operation Processes	3.4.2, Att. 4	
PH	Thermal hydride/dehydride	Metal Operation Processes	3.4.2, Att. 4	
PI	Preparation of isotopes	Special Processing	3.4.4, Att. 4	
PIG	Welding	Metal Operation Processes	3.4.3, Att. 4	
PK	Pickling and nitrate holding	Pyrochemical Processes	3.4.11, Att. 4	D006, D007, D008, D011
POSM	Processing out-of-specification material	Special Processing	3.4.3, Att. 4	D007, D011
PPD	Pu pellet dissolution	Special Processing	3.4.11, Att. 4	
PR	Peroxide precipitation	Nitrate Operations	3.4.3, Att. 4	
PRR	Pyrochemical residue recovery	Chloride Operations	3.4.3, 3.4.4, Att. 4	D007, D009
PS	Peroxide precipitation of MSE salts	Nitrate Operations	3.4.2, 3.4.6, Att. 4	
PT	Plutonium-thorium separation	Nitrate Operations	3.4.2, 3.4.6, Att. 4	D007
PTP	Plutonium trichloride preparation	Pyrochemical Processes	3.4.12, Att. 4	D019
PTS	RD&D pretreatment study	Nitrate Operations	3.4.1, 3.4.6, Att. 4	D005, D006, D007, D008, D011
PUB	Pu/Be source recovery	Chloride Operations	3.4.1, Att. 4	D007, D008, D009
PX	Pyrochemical R&D	Special Processing	3.4.6, 3.4.7, 3.4.8, 3.4.9, 3.4.10, Att. 4	D006, D008, D019 | stet
RA	Recovery of anodes	Pyrochemical Processes	3.4.6, Att. 4	why not listed from | Table 1?
RAP	Research alloy preparation	Metal Operation Processes	3.4.3, Att. 4	
RAP2	Research alloy preparation	Metal Operation Processes	3.4.3, Att. 4	
RASS/RSS	Raman spectroscopy system	Miscellaneous Operations	3.4.5, Att. 4	D004, D005, D006, D007, D008, D009, D010, D011, D019
RB	Roasting and blending	Nitrate Operations	3.4.3, Att. 4	

P/S Code	P/S Name	AK Process Report and Primary Report Section in which P/S Code is Described*		RCRA Listings for Combustible Debris
SX	Americium processing silicon removal	Nitrate Operations	3.4.3, 3.4.6, Att. 4	
TDC	Thermal decomposition of cellulose items	Nitrate Operations	3.4.1, Att. 4	D005, D006, D007, D008, D011
TIGR	Thermally induced gallium removal	Metal Operation Processes	3.4.3, Att. 4	
UA	Uranium fabrication	Metal Operation Processes	3.4.2, Att. 4	
UPS	Uranium/plutonium separation	Nitrate Operations	3.4.2, Att. 4	
US	Uranium separation for solid solution feed	Nitrate Operations	3.4.2, 3.4.6, Att. 4	
US2	Uranium separation for non-solid solutions feed	Nitrate Operations	3.4.2, 3.4.6, Att. 4	
VC	Variable CSMO scrap dissolution	Nitrate Operations	3.4.2, 3.4.6, Att. 4	D006, D008
VD	Vapor degreaser and sand blasting	Metal Operation Processes	3.4.2, Att. 4	
VP1	CSMO scrap dissolution	Nitrate Operations	3.4.2, 3.4.6, Att. 4	D009
VP2	Polycube processing	Nitrate Operations	3.4.1, 3.4.6, Att. 4	
VP3	Hydroxide precipitation	Nitrate Operations	3.4.3, 3.4.6, Att. 4	D009/~~D011~~
VS	Confirmation, inspection & sampling	Miscellaneous Operations	3.4.5, Att. 4	
VU	Vessel unloading	Special Processing	Att. 4	D005, D008
VUL	Vessel unloading	Nitrate Operations	3.4.1, Att. 4	D005, D008
WE	Welding	Metal Operation Processes	3.4.2, Att. 4	
WLT	Welding leak test	Metal Operation Processes	3.4.3, Att. 4	
WM	Waste management	Miscellaneous Operations	3.4.9, Att. 4	D007, D008, D009, D022, D035, D040, F001, F002, F005
X0	Inactive or unspecified P/S material	Miscellaneous Operations	3.4.9, Att. 4	D007, D008, D009, D022, D035, D040, F001, F002, F005
XES	X-ray energy spectroscopy	Miscellaneous Operations	3.4.5, Att. 4	D004, D005, D006, D007, D008, D009, D010, D011
XO	Inactive or unspecified P/S material	Miscellaneous Operations	3.4.9, Att. 4	D007, D008, D009, D022, D035, D040, F001, F002, F005
XP	RD&D experimental processes	Miscellaneous Operations	3.4.4, Att. 4	D004, D005, D006, D007, D008, D009, D010, D011
ZD	Scrap oxide dissolution	Nitrate Operations	3.4.2, 3.4.6, Att. 4	

* Process AK summary reports: Chloride Operations (TWCP-AK-2.1-002,R.2), Metal Operation Processes (TWCP-AK-2.1-003,R.2), Miscellaneous Operations (TWCP-AK-2.1-004,R.2), Nitrate Operations (TWCP-AK-2.1-005,R.2), Pyrochemical Processes (TWCP-AK-2.1-006,R.2), and Special Processing (TWCP-AK-2.1-007, R.2)

Sub 1b this will go on previous page

Jim - your call!

ACCEPTABLE KNOWLEDGE SUMMARY FOR TA-55-19

Waste Stream Number and Title:	TA-55-19, Mixed Combustible Debris Waste
Summary Category Group:	S5000
Waste Matrix Code and Description:	S5300
TWBIR:	LA-M16
TRUCON Codes:	LA116A, LA116B, LA116C, LA116D, LA116E, LA116F, LA116H, LA116I
Maximum Layers of Packaging:	6
Site:	LANL
Waste-Generating Facility:	TA-55, Plutonium Facility (building PF-4), all wings
Time Period of Generation:	1978–present
Defense Waste Status:	Defense-related transuranic (TRU) waste. There is no historical record or evidence of spent nuclear fuel or high-level waste ever having been handled at the facility.
Waste Stream Volume (as stored):	4173 containers (873 m^3) [including lot TA-55-19A]
Waste Stream Volume (after repackaging):	850 SWBs, 3873 drums (2390 m^3)

Facility Mission

TA-55 has extensive capabilities for the extraction and recovery of plutonium from residues and scraps generated from operations at various LANL facilities and other DOE sites in the defense complex. The recovered plutonium is converted into pure plutonium feedstock. These manufacturing and recovery operations, associated maintenance operations, and TA-55 plutonium research are the sources of TRU-contaminated scrap, residues, and debris generated at TA-55. The scrap and residues are processed to recover as much plutonium as practicable before disposal. Wastes are generated from plutonium recovery and purification for defense and non-defense programs; these wastes are generated and produced in the same rooms and gloveboxes and were not segregated based on funding source until August 27, 1998.

Waste Generating Processes

Plutonium manufacturing, recovery, and research operations at the TA-55 Plutonium Facility, as well as associated maintenance operations, generate TRU wastes. These operations include:

ACCEPTABLE KNOWLEDGE SUMMARY FOR TA-55-19A

Waste Stream Number and Title: TA-55-19A, Mixed Combustible Debris Waste with P120

NOTE: This is a subset (i.e., lot) of waste stream TA-55-19. It is distinguished from TA-55-19 only insofar as the waste has the potential to include vanadium pentoxide (EPA HWN P120).

Summary Category Group: S5000

Waste Matrix Code and Description: S5300

TWBIR: LA-M16

TRUCON Codes: LA116A, LA116B, LA116C, LA116D, LA116E, LA116F, LA116H, LA116I

Maximum Layers of Packaging: 6

Site: LANL

Waste-Generating Facility: TA-55, Plutonium Facility (building PF-4), all wings

Time Period of Generation: 02/98–06/98

83 containers (16 m^3)

Defense Waste Status: Defense-related TRU waste. There is no historical record or evidence of spent nuclear fuel or high-level waste ever having been handled at the facility.

I still need to research this

Waste Stream Volume (as stored): ~~Not yet determined~~ why not if the generation period was only 4 months?

Waste Stream Volume (after repackaging): Not yet determined

This doesn't make sense - if 55-19A is a subset and you have volumes on 55-19, you need volumes here - or you need to note "exclude 55-19A from 55-19

Facility Mission

TA-55 has extensive capabilities for the extraction and recovery of plutonium from residues and scraps generated from operations at various LANL facilities and other DOE sites in the defense complex. The recovered plutonium is converted into pure plutonium feedstock. These manufacturing and recovery operations, associated maintenance operations, and TA-55 plutonium research are the sources of TRU-contaminated scrap, residues, and debris generated at TA-55. The scrap and residues are processed to recover as much plutonium as practicable before disposal. Wastes are generated from plutonium recovery and purification for defense and non-defense programs; these wastes are generated and produced in the same rooms and gloveboxes and were not segregated based on funding source until August 27, 1998.

Waste stream AK report

Radionuclide Content

Corrections needed on all 3 AK summaries

~~These waste streams predominantly contain a variety of plutonium material types with different well-defined isotopic compositions. Americium-241, neptunium-237, and uranium-234 may be present at detectable concentrations as decay products of their plutonium precursors. Some of the processes separate plutonium from americium and uranium. The waste will usually be enriched in americium-241 and uranium-234 relative to plutonium, but may also be depleted in some cases. Some waste may contain uranium from one of several uranium material types, as well as contaminants from uranium-235: its decay daughter, protactinium-231, and fission product cesium-137.s. Other waste may contain various radionuclides used as feed materials for producing radioassay sources, including americium-241, americium-243, cerium-144, curium-244, protactinium-231, neptunium-237, thorium-232, thorium-232 enriched in thorium-230, uranium-233, and depleted uranium.~~ These waste streams predominantly contain a variety of plutonium material types with different well-defined isotopic compositions. Americium-241, neptunium-237, [~~protactinium-231~~], and uranium-234 may be present at detectable concentrations as decay products of their plutonium precursors. Some of the processes separate plutonium from americium and uranium. The waste will usually be enriched in americium-241 and uranium-234 relative to plutonium, but may also be depleted in some cases. Some waste may contain uranium and its decay products (e.g., uranium-234) from one of several uranium material types used as feed material. In addition, trace levels of cesium-137 and protactinum-231 may be present because of their widespread presence as contaminants in TA-55 operations. ~~this fission product was not completely separated from plutonium during Purex processing at other DOE sites~~. Other waste may contain various radionuclides used as feed materials for producing detector materials, including americium-241, americium-243, cerium-144, curium-244, protactinium-231, neptunium-237, thorium-232, thorium-232 enriched in thorium-230, uranium-233, and depleted uranium.

Primary References for Documentation of Acceptable Knowledge

Los Alamos National Laboratory Transuranic Waste Characterization Sampling Plan (TWCP-PLAN-0.2.7-001,R.3)

Process Acceptable Knowledge Summary Report for Chloride Operations at TA-55 (TWCP-AK-2.1-002)

Process Acceptable Knowledge Summary Report for Metal Operation Processes at TA-55 (TWCP-AK-2.1-003)

Process Acceptable Knowledge Summary Report for Miscellaneous Operations at TA-55 (TWCP-AK-2.1-004)

Process Acceptable Knowledge Summary Report for Nitrate Operations at TA-55 (TWCP-AK-2.1-005)

Process Acceptable Knowledge Summary Report for Pyrochemical Processes at TA-55 (TWCP-AK-2.1-006)

ACCEPTABLE KNOWLEDGE SUMMARY FOR TA-55-20

Waste Stream Number and Title:	TA-55-20, Non-mixed Combustible Debris Waste
Summary Category Group:	S5000
Waste Matrix Code and Description:	S5300
TWBIR:	LA-T16
TRUCON Codes:	LA116A, LA116B, LA116C, LA116D, LA116E, LA116F, LA116H, LA116I
Maximum Layers of Packaging:	6
Site:	LANL
Waste-Generating Facility:	TA-55, Plutonium Facility (building PF-4), all wings
Time Period of Generation:	1979–present
Defense Waste Status:	Defense-related TRU waste. There is no historical record or evidence of spent nuclear fuel or high-level waste ever having been handled at the facility.
Waste Stream Volume (as stored):	281 containers (59 m^3)
Waste Stream Volume (after repackaging):	Not ~~available~~ yet determined

Is there a difference meaning in "Not available" versus "Not yet determined"?

Facility Mission

TA-55 has extensive capabilities for the extraction and recovery of plutonium from residues and scraps generated from operations at various LANL facilities and other DOE sites in the defense complex. The recovered plutonium is converted into pure plutonium feedstock. These manufacturing and recovery operations, associated maintenance operations, and TA-55 plutonium research are the sources of TRU-contaminated scrap, residues, and debris generated at TA-55. The scrap and residues are processed to recover as much plutonium as practicable before disposal. Wastes are generated from plutonium recovery and purification for defense and non-defense programs; these wastes are generated and produced in the same rooms and gloveboxes and were not segregated based on funding source until August 27, 1998.

Waste Generating Processes

Plutonium manufacturing, recovery, and research operations at the TA-55 Plutonium Facility, as well as associated maintenance operations, generate TRU wastes. These operations include:

- Preparation of ultra-pure plutonium metals, alloys, and compounds

WASTE GENERATION SUMMARY DIAGRAM

from TA-55 operations

Revised layout:

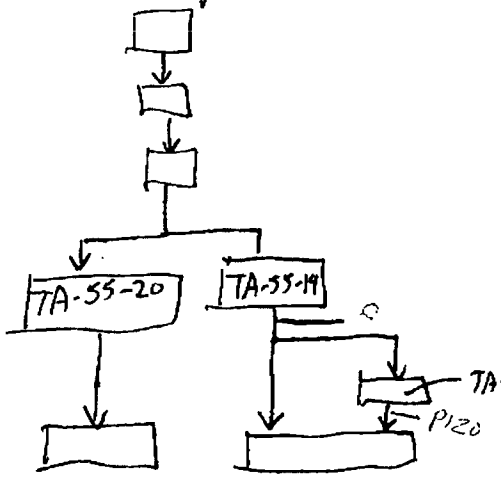

Combustible debris waste items from gloveboxes with P/S codes ~~AO, ABC, CF, EV, MOX, OH, RM, SX, XES~~. (~~There are over 200 of these processes at TA-55.~~)

Does this mean they are part of this? I'd delete

only two below you don't have here - SS and SD

Combustible waste items ~~randomly~~ packaged into drums by TA-55 waste management personnel.

Drums sorted into waste streams (based on data base review of items packaged into each drum).

This doesn't show as a subset of 55-19 — Maybe redefine & don't say subset? but, you want this rpt to apply -

TA-55-20
Non-mixed combustible waste
(e.g., P/S codes ACC, MOX, RM, SX)

- Building TA-55, PF-4
- IDC: 004
- EPA Codes: None

Inspectable storage at TA-54, Area G

TA-55-19
Mixed combustible waste
(e.g., P/S codes AC, CF, EV, OH, XES)

- Building TA-55, PF-4
- IDC: 004
- EPA Codes: D004, D005, D006, D007, D008, D009, D010, D011, D018, D019, D021, D022, D035, D038, D039, D040, F001, F002, F003, F005

Inspectable storage at TA-54, Area G

TA-55-19A
Mixed combustible waste generated by P/S codes SS or SD between 02/98 and 06/98

- Building TA-55, PF-4
- IDC: 004
- EPA Codes: D004, D005, D006, D007, D008, D009, D010, D011, D018, D019, D021, D022, D035, D038, D039, D040, F001, F002, F003, F005, P120

Inspectable storage at TA-54, Area G

ACCEPTABLE KNOWLEDGE SUMMARY REPORT FOR WASTE STREAMS TA-55-19, LOT TA-55-19~~A~~, AND TA-55-20

A ?

1.0 INTRODUCTION

All transuranic (TRU) waste must be sufficiently characterized and certified before it is shipped to the Waste Isolation Pilot Plant (WIPP). The U.S. Environmental Protection Agency (EPA) allows use of acceptable knowledge (AK) for waste characterization, and defines AK in its guidance document, *Waste Analysis at Facilities that Generate, Treat, Store and Dispose of Hazardous Waste*. Attachment B, Waste Analysis Plan, to the *Hazardous Waste Facility Permit Issued to the Waste Isolation Pilot Plant* (EPA No. NM4890139088) (WIPP WAP) defines AK information and provides guidelines on how AK should be obtained and documented.

This AK summary report was prepared in accordance with *Acceptable Knowledge Documentation* (TWCP-QP-1.1-021). The primary purpose of this report is to systematically organize, evaluate, and summarize AK information about characteristics of the wastes generated by the Plutonium Facility at Technical Area (TA) 55, one of the TRU waste generators at Los Alamos National Laboratory (LANL). By doing so, this report provides technical support for assignment of specific waste containers to the waste stream.

2.0 METHODOLOGY USED TO SEARCH FOR AK RECORDS

The AK search for the information related to waste streams TA-55-19 (including lot TA-55-19A) and TA-55-20 covered:

- Review of the *Los Alamos National Laboratory Transuranic Waste Characterization Sampling Plan* (TWCP-PLAN-0.2.7-001) (Sampling Plan) that includes information regarding all waste streams, including TA-55-19 and TA-55-20
- Review of documents related to the waste generation and waste management activities at TA-55 as documented in the Acceptable Knowledge Roadmap (Attachment 1)
- Interviews with personnel involved with waste generation and waste management at TA-55 as documented in process AK reports listed in the Acceptable Knowledge Roadmap (Attachment 1)
- Review of process AK reports for TA-55 processes (as discussed below)
- Analysis of processes generating waste, as discussed in the process AK reports and in this report

The Transuranic Waste Characterization/Certification Project (TWCP) Records Management/Document Control (RMDC) Center contains copies of the documents that are referenced in this summary report. Unclassified Controlled Nuclear Information (UCNI) ~~will be~~ is reported in records, rather than included in this report. Such records are identified as UCNI in the Acceptable Knowledge Roadmap (Attachment 1).

This AK summary report is based on detailed information compiled in a set of closely related reports about TRU waste generating activities at TA-55. For convenience in organizing AK for plutonium processing at this facility, the processes were categorized into six ~~arbitrary~~ operational areas. The multiple processes in each area are ~~then~~ described in detail in the following six process AK reports:

- *Process Acceptable Knowledge Summary Report for Chloride Operations at TA-55* (TWCP-AK-2.1-002)
- *Process Acceptable Knowledge Summary Report for Metal Operation Processes at TA-55* (TWCP-AK-2.1-003)
- *Process Acceptable Knowledge Summary Report for Miscellaneous Operations at TA-55* (TWCP-AK-2.1-004)
- *Process Acceptable Knowledge Summary Report for Nitrate Operations at TA-55* (TWCP-AK-2.1-005)
- *Process Acceptable Knowledge Summary Report for Pyrochemical Processes at TA-55* (TWCP-AK-2.1-006)
- *Process Acceptable Knowledge Summary Report for Special Processing at TA-55* (TWCP-AK-2.1-007)

The process AK reports contain information on over 175 individual processes that have each been assigned a unique identifier called a process/status (P/S) code. For example, the nitrate operations report (*Process Acceptable Knowledge Summary Report for Nitrate Operations at TA-55* [TWCP-AK-2.1-005,R.2]) covers waste generation processes and characteristics for over 80 different processes, each with its own P/S code. The search and compilation of AK information was based on P/S code, because that is the greatest level of process detail recorded in waste generator records. However, as described in section 3.2, TA-55 TRU waste items have always been segregated and packaged into waste containers based on the physical form and material type content of the waste, without regard to process of origin (i.e., P/S code). In order to mitigate confusion resulting from these two different ways of categorizing TA-55 waste (by process of generation and P/S code or by material content and waste stream number), separate AK reports have been prepared for each categorization method (i.e., process AK reports for process areas, and AK summary reports for waste streams). The AK information search was performed based on the processes used at TA-55 and tracked by the P/S codes, and it is summarized in the process AK reports.

This AK summary report summarizes AK information specific to the combustible debris waste streams TA-55-19 (including waste stream lot TA-55-19A) and TA-55-20.

3.0 DESCRIPTION OF THE WASTE STREAM

3.1 Facility and Mission

TA-55 has extensive capabilities for the extraction and recovery of plutonium from residues and scraps generated from operations at various LANL facilities and other DOE sites in the defense complex. The recovered plutonium is converted into pure plutonium feedstock. These manufacturing and recovery operations, associated maintenance operations, and TA-55 plutonium research are the sources of TRU-contaminated scrap, residues, and debris generated at TA-55. The scrap and residues are processed to recover as much plutonium as practicable before disposal. Wastes are generated from plutonium recovery and purification for defense and non-defense programs; these wastes are generated and produced in the same rooms and gloveboxes and were not segregated based on funding source until August 27, 1998.

The combustible waste streams TA-55-19 and TA-55-20 were generated at the TA-55 Plutonium Facility (Building PF-4) as debris waste from process operations and glovebox maintenance involved in plutonium recovery. For this reason, the waste streams are defense related. However, waste also was produced from "special process" and research-related activities. These wastes were not segregated until 1998, but rather were commingled in the final waste containers to such an extent that segregation is not possible on the basis of waste generating process or glovebox location (TWCP-887). The waste was also co-mingled with room trash related to these same operations (both defense and non-defense), which was initially boxed as low-level waste but was returned for discard in drums as TRU waste when on-site assay results showed it exceeded the low-level waste threshold value (TWCP-816).

A LANL site map and a detailed map of the buildings at TA-55, including Building PF-4, are shown in Attachment 2.

3.2 Basis, Rationale, and Assumptions Used to Delineate the Waste Streams

The basis for delineation of TA-55 waste streams was established by the evolving set of LANL and TA-55 waste management plans and site-specific procedures, which date back to the start of operations at the Plutonium Facility in 1978 (TWCP-352, TWCP-697, TWCP-700, TWCP-701, TWCP-3943). The stated guidance and practice from the beginning, continuing to the present day, has been to handle and package all combustible and noncombustible debris waste in a similar fashion, regardless of the process of origin. Relevant details of these planning and implementation documents are summarized in this section~~, in order~~.

to provide background information to support the process used by TWCP to assign TA-55 waste containers to specific waste streams. Waste stream assignment is made on the basis of waste generator information compiled in the TWCP waste container data base, which comprises the bulk of the Sampling Plan. Waste generator information is reviewed to identify the types and sources of waste items present in each drum~~, in order~~ to evaluate the most appropriate waste summary group, waste matrix code, and potential for the presence of hazardous constituents.

3.2.1 Waste Packaging at TA-55

Inspection, collection, documentation and packaging operations of solid, certifiable TRU wastes at TA-55 are conducted in PF-4 by a waste management section or team (TWCP-352, TWCP-700, TWCP-701, TWCP-3943). Wastes from all TRU waste-generating activities at TA-55 are handled and packaged by this team. Materials are considered waste only when they have been received and processed by the waste management team. Waste segregation schemes used by this team have evolved since operations began at the Plutonium Facility in 1978.

In 1978, the standard operating procedure for waste management at TA-55 stated the guiding philosophy of minimizing the amount of waste generated and minimizing the plutonium content of that waste (TWCP-3943). Discard Limits (DL) for plutonium in various types of waste matrices were established by the waste-generating group, and approved by the LANL division office and the DOE Albuquerque Operations Office. Personnel were requested to sort potentially recyclable TRU waste items (i.e., those containing potentially recoverable amounts of plutonium) into classes such as rubber, plastics, rags, non-Pu metals, glass, oils, cans, sweepings, etc. These materials were then assayed. Based upon its plutonium level relative to the DL, material was either sent to recovery operations or to "20-year" retrievable storage. All liquids, including oils, were required to be sent to recovery operations for processing. Liquids were explicitly prohibited from any container of solid waste materials.

In 1984, a lab-wide TRU Waste Certification Plan was adopted for newly generated TRU waste (TWCP-697). Each LANL waste generator was required to develop an attachment to this plan to define the details of the waste certification functions and controls that applied to their specific processes and waste streams. TA-55 prepared an attachment in March 1987 for contact-handled combustible and noncombustible solid waste (TWCP-701), defined as follows:

- Combustible waste forms included materials ~~which~~ that could be reduced to an ash if desired but ~~which~~ that did not require further processing to meet the WIPP WAC (TWCP-701). (This definition is still current.) Subcategories included plastic-base, cellulose-base and miscellaneous (graphite and graphite crucibles). It was acceptable for the combustible waste stream to include some unspecified "small" fraction of noncombustible solids such as scrap metals.

consistency

- Noncombustible waste forms included materials that could not be reduced to ash but that did meet the WIPP WAC without further processing (TWCP-701). The two subcategories were metals and non-metals. The non-metal wastes included glass, fiberglass heating mantles, porcelain crucibles, ceramic furnace tube inserts, and leaded glovebox gloves. It was acceptable for the noncombustible waste stream to include some unspecified "small" fraction of combustible solids, and that could be contained in plastics. For WIPP purposes, any waste forms that were chemically compatible and that met the WAC, could be combined into a single waste container.

In 1995, a new TRU Waste Certification Plan was adopted, including a new attachment that formalizes how the TA-55 waste management team currently segregates newly generated wastes into waste streams (TWCP-700). Waste materials are segregated:

- by radioisotope ~~in order~~ to meet nondestructive assay (NDA) and gas generation requirements
- by material matrix ~~in order~~ to meet NDA and TRUCON requirements
- by hazardous constituents ~~in order~~ to meet RCRA and Department of Transportation (DOT) requirements

Combustible waste forms include plastic base and cellulose base (TRUCON code 116), but graphite waste was moved to the noncombustible category. Noncombustible debris waste forms are broken down to a finer level of classification than had previously been used:

- metals (TRUCON code 117)
- glass (TRUCON code 118)
- HEPA filters (TRUCON code 119)
- leaded gloves (TRUCON code 123)
- salts (TRUCON code 124)
- graphite (TRUCON code 115)

In addition, each major waste form includes provisions for small quantities of unspecified waste with similar properties. This provision is necessary ~~in order~~ to allow for infrequently encountered waste items.

3.2.2 Waste Stream Delineation for TA-55

From the beginning of operations at TA-55, the physical description of each waste item generated was documented on a Waste Origination and Disposition Form (WODF) by the waste generator according to controlled procedures. The P/S code for waste items was sometimes also documented on this form. Starting in 1987, the TA-55 Plutonium Facility began its current system of tracking waste items both by the process from which they originated as well as by their material content. Waste items are labeled with an item identification (ID) code that contains information on the waste material parameter of the item and an embedded P/S code that corresponds to the process that produced the waste item (although recording of P/S codes was inconsistent until about 1990). In the packaging process, a standard form, the Discardable Waste Log Sheet (DWLS), was used to list each ID code and record its matrix material. This form was signed by the waste packager and approved by quality assurance personnel. Both the WODF and DWLS for each TRU waste drum have been maintained as hard copy records by the generator. For waste stream TA-55-19, example copies of these container records (for combustible debris) are included in Attachment 4. Note that this waste container (LA00000056636) contains waste items generated by three different P/S codes (CXL, ED, and SC), each with its own completed WODF.

Waste items are packaged into waste containers based on the material content of the waste, without regard to P/S code. This practice complicates AK tracking because a single waste container can include waste items from several P/S codes. In the Sampling Plan, TA-55 wastes have been assigned to waste streams based on the waste segregation schemes used by TA-55:

- First by radioisotope content (Pu-238 or Pu-239 material type)
- Then by material matrix (combustible, noncombustible, metal, glass, etc. waste types)
- Then by hazardous waste status (mixed, non-mixed, or special case waste streams)

Waste stream delineation was performed using waste generator information (such as the WODF and DWLS) that has been compiled in an electronic data base that is part of the Sampling Plan. Because waste

items from several different P/S codes were combined into each waste drum, a special sort on the P/S code of each waste item in a drum was necessary to determine if the drum contained all non-mixed items, some or all mixed-waste items, or a special case item (such as an item from P/S code SS carrying the EPA Hazardous Waste Number (HWN) P120). If the P/S code information was missing for any item in a waste drum (as was the case for many older wastes), that drum was conservatively assigned to the mixed-waste stream. Fortunately, the special case wastes carrying the HWN P120 were generated relatively recently, such that the data base records for those items are usually complete.

3.2.3 Waste Container Labeling

The net effect of the waste packaging system used at TA-55 is that several HWNs are conservatively assigned to individual waste streams for the purposes of WIPP disposal, because the WIPP WAP requires HWN assignment on a waste stream rather than a waste container basis. For the purposes of generator and on-site storage, however, LANL labels waste on a container by container basis. Thus, the hazardous labels on containers in storage at LANL should not be expected to correspond to the HWNs assigned to the waste stream through this AK summary report. Hazardous labels are updated to meet WIPP disposal requirements just before loading waste containers into the Transuranic Package Transporter-Model II (TRUPACT-II) for shipping to the WIPP.

3.3 Waste Physical Form and Content Description

Because you talk about "both" meaning -19 + -20 / Also, -19A is subset

The TA-55-19~~, -19A,~~ and-20 waste streams are defined as combustible debris waste streams (Sampling Plan, Appendix D), with TA-55-19 being a mixed-waste stream and TA-55-20 its non-mixed counterpart. TA-55-19A is a small substream lot, distinguished from TA-55-19 by the addition of HWN P120. Both of these waste streams include paper, rags, plastic, rubber, and plastic-based and cellulose-based waste generated at the facility. Plastic-based waste includes, but may not be limited to, polyethylene and vinyl tape, gloves, plastic vials, polystyrene, Tygon tubing, polyvinyl chloride plastic, Teflon products, Plexiglas, and dry box gloves (unleaded neoprene base). Cellulose-based waste includes, but may not be limited to, rags, wood, paper, and cardboard; laboratory coats and overalls; booties and cotton gloves, and similar materials. The waste may also contain a small fraction (generally less than 5 percent) of non-combustible solids (scrap metal, metal lids, and clothing zippers) (Sampling Plan, Appendix D).

Leaded gloves are also generated as process waste in TA-55 operations. Prior to 1987, leaded gloves were discarded in the combustible ~~and~~ non-combustible debris waste streams, including TA-55-19. Between 1987 and May 1992, leaded gloves began to be segregated from combustible debris and discarded in the metal debris waste stream because of concern that explosive lead oxides might form if

math? Stet [don't know answer]

the combustible debris waste were ever incinerated. Since May 1992, leaded gloves have been routinely segregated from other metal debris waste and assigned to a separate leaded-glove waste stream.

3.4 Waste Volume and Time Period of Waste Generation

The following information is from Appendix D of the Sampling Plan (R.3). These inventories are expected to change because the Sampling Plan is continually updated as new waste information is obtained.

- TA-55-19 includes 4173 containers (873 cubic meters), that were generated from 1978 to the present time.
- Waste stream lot TA-55-19A is a subset of TA-55-19 which contains 83 containers (16 cubic meters), with waste items generated ~~between~~ from P/S codes SD and SS between 2/98 and 6/98. [~~is not yet fully defined in the sense that a list of specific waste containers in this lot has not yet been prepared. This is because P/S codes are not always explicitly identified for waste items in TA-55 waste containers. However, it may be possible to extract this information from the waste item identifiers, at which time waste containers can be assigned to TA-55-19A.~~]

So how do I ensure we are not sending any of this to WIPP?

- TA-55-20 includes 281 containers (59 cubic meters), that were generated from 1979 to the present time.

3.5 Waste Stream Generation Processes

3.5.1 Overview

The TA-55-19, -19A, and -20 combustible debris waste streams were generated from combustible materials used in processes to recover plutonium from residues, metal fabrication, and research and development activities. The variety of plutonium handling operations includes:

- Preparing ultra-pure plutonium metals, alloys, and compounds
- Preparing, on a large scale, specific alloys, including casting and machining these materials into specific shapes
- Determining high-temperature thermodynamic properties of plutonium
- Reclaiming plutonium from scrap and residues produced by numerous feed sources
- Disassembling components for inspection and analysis

- Manufacturing of parts on a limited basis
- Processing mixtures of plutonium and uranium oxides for reactor fuels.

The manufacturing and research operations performed at TA-55 in the recovery of plutonium results in the production of plutonium-contaminated scrap and residues. These residues are processed to recover as much plutonium as is practical (TWCP-352). TA-55 has extensive capabilities for the extraction and recovery of plutonium from residues and scrap generated from operations at various LANL, other U.S. Department of Energy (DOE) facilities, and commercial radioactive sources. These recovery operations, along with associated maintenance operations, and TA-55 plutonium research are the sources of TRU waste generated at TA-55.

Plutonium processing operations generate contaminated combustible waste from:

- Plastic materials that result in combustible waste such as Tygon tubing, polyvinyl chloride vials, plastic bags, etc.
- Cellulose-based cleaning aids and personal protective equipment such as rags, paper wipes, laboratory coats, coveralls, booties, etc.
- Rubber- and Teflon-based products used in operations, such as rubber gloves, Teflon tape, gaskets, stoppers, etc.

3.5.2 Process Flow Diagrams

Detailed information about the TA-55 plutonium recovery processes can be found in the process AK reports. For purposes of the AK search, and to allow convenient referral to and referencing of the process AK reports in this waste stream AK summary report, the processes have been ~~arbitrarily~~ divided into six major areas:

- Chloride Operations (TWCP-AK-2.1-002)
- Nitrate Operations (TWCP-AK-2.1-005)
- Miscellaneous Operations (TWCP-AK-2.1-004)
- Special Processing (TWCP-AK-2.1-007)
- Metal Operation Processes (TWCP-AK-2.1-003)
- Pyrochemical Processes (TWCP-AK-2.1-006)

Generalized flow diagrams for these six operational areas are presented as Attachment 3 and indicate P/S codes for the various processes. The

full block flow diagram for plutonium processing and waste management at TA-55 is given in reference TWCP-886.

The following subsections describe the processes that generated debris waste assigned to the TA-55-19, ~~19A,~~ and -20 waste streams. The potential for RCRA-regulated constituents to be present due to feed materials and chemical use in these processes is summarized in Sections 3.6.1 and 3.6.3. The applicability of EPA HWNs as a result of this potential is specified in Section 8.

3.5.3 Chloride Operations

P/S codes CL, CLRD, CLS, CS, CSE, CW, CX, CXL, LD, MB, MS, PB, PRR, PUB, and SE

A detailed description of chloride operations can be found in *Process Acceptable Knowledge Summary Report for Chloride Operations at TA-55* (TWCP-AK-2.1-002).

The overall goal of the chloride operations is to recover plutonium from scrap and residues and produce a purified plutonium oxide for conversion to metal. The primary feed sources are plutonium residues from pyrochemical operations, plutonium-beryllium (PuBe) neutron sources, analytical laboratory solutions, and residues from other DOE facilities. Chloride operations can be broken down into the following process steps:

- pretreatment
- dissolution
- purification
- hydroxide precipitation

Pretreatment may include sorting, crushing, and/or pulverizing feed materials prior to being fed into later steps of chloride operations. A separate pretreatment procedure is the decladding of plutonium-beryllium sources. The PuBe metal alloy is removed from the sources, which are then entered into the chloride line for plutonium recovery along with other materials.

In the dissolution step, hydrochloric acid is used to leach and dissolve plutonium from scrap, crucibles, residues, and various solutions, including solutions from the analytical chemistry laboratory. Enriched solutions undergo further purification (see next paragraph), and solid wastes are discarded as debris waste or sent to cement fixation in nitrate operations (Section 3.5.4).

Purification steps may include solvent extraction, ion exchange, and oxalate precipitation, depending on the chemical nature of the material to be purified. Ion exchange columns are used to collect plutonium and separate out impurities. Enriched solutions may be further treated with oxalic acid to precipitate plutonium oxalate, which is converted to plutonium oxide.

In the hydroxide precipitation step, plutonium in filtrate solutions from purification steps is precipitated with potassium, magnesium, or sodium hydroxide. Heavy metals are concentrated in the plutonium-rich hydroxide cakes and derive from one or more of the following: (a) feed materials that consist of or contain these metals; (b) leaching of chromium from stainless-steel equipment components; or (c) ~~from~~ the use of silver salt (until 1994) as an indicator of chloride content. The resulting Pu-enriched hydroxide cakes become feed material for nitrate operations, and liquid meeting the TA-50 WAC is sent to the RLWTF using the caustic waste line. Some hydroxide cakes are returned to the dissolution step for re-processing.

3.5.4 Nitrate Operations

P/S codes AL, AO, AP, AS, AT, ATL, BAC, BF, BL, BM, BU, CC, CD, CF, CH, COD, COL, CPOD, CR, DF, DP, DS, ED, ETD, EV, FA, FC, FX, GMS, HC, HCD, HD, HGMS, HP, HRA, IA, IS, LC, LG1, LG2, LR, MAG, MAS, MB, MELL, MF, ML, MPD, NC, NL, NR, OD, OH, OY, PA, PAF, PR, PS, PT, PTS, RB, RBJ, RC, RCM, RFX, RO, RR, SC, SP, SSD, SX, TDC, UPS, US, US2, VC, VP1, VP2, VP3, VUL, ZD

A detailed description of nitrate operations can be found in *Process Acceptable Knowledge Summary Report for Nitrate Operations at TA-55* (TWCP-AK-2.1-005).

The overall goal of the nitrate operations is to recover plutonium from scrap and residues, and produce a purified plutonium oxide for conversion into metal. The primary feed sources for the nitrate operations are plutonium residues from other recovery operations (e.g., chloride operations), metal preparation, metal fabrication, analytical laboratory operations, and residues from other DOE facilities. Nitrate operations can be broken down into the following process steps:

- pretreatment
- dissolution
- purification
- evaporation
- cement fixation

Pretreatment primarily includes physical processes used to separate scrap and residues for the next step, dissolution. It may include calcination, caustic leaching, chemical separation (hydroxide or oxalate precipitation), crushing and pulverizing, distillation, filtering of liquids or oils, incineration, magnetic separation, passivation, scraping, or sorting. After pretreatment, solids are sent to dissolution if plutonium concentrations are above the DL and to solid waste packaging (at the present time) or to cement fixation (in the past) if concentrations are below the DL. Liquids are sent to purification if plutonium concentrations are above the DL and to the TA-50 Radioactive Liquid Waste Treatment Facility (RLWTF) if they meet the TA-50 RLWTF WAC or to evaporation and cement fixation; otherwise, they are further treated until they meet that WAC.

Dissolution includes various steps that generate plutonium nitrate solutions for feed to purification. Primary chemicals used in dissolution are nitric acid ~~and~~ calcium fluoride, and/or hydrofluoric acid. Filtered solids are returned to the dissolution process until plutonium concentrations are below the DL, then sent to cement fixation for disposal. Debris items are disposed after removal of plutonium contamination above the DL. Plutonium-bearing solutions are sent ~~on~~ to purification.

Purification consists of ion exchange and precipitation processes. The ion exchange processes use resin-filled columns to collect plutonium, which binds to the resin while impurities flow through the columns; an eluting agent is then used to release purified plutonium in solution. The enriched solutions are then sent to oxalate precipitation. Calcination of the oxalate converts the plutonium to oxide form. The depleted liquids are sent to the evaporator or the RLWTF, and the calcined plutonium oxides are sent to the vault.

The evaporator processes plutonium-poor liquids in order to re-concentrate plutonium, if possible, or to reduce the volume of liquid waste. Evaporator bottoms are either sent back to ion exchange or discarded to cement fixation, depending on their plutonium content. Heavy metals that may be present are concentrated in this process.

In the cement fixation step, wastes with low plutonium concentrations are collected and immobilized in cement. Most of the wastes generated under these processes (P/S codes CF, HP, and IA) are classified as cemented wastes and would not normally be part of the debris waste streams.

compounds, their characterization and reaction chemistry, and application to existing actinide processing technology. Other operations comprised a broad range of laboratory activities in support of fundamental and applied actinide chemistry research, including preparation of solvents and reagents, synthesis of new chemical compounds, and characterization and analysis of new chemical compounds using wet chemistry methods and analytical instrumentation.

Analytical Operations. This category covers all analytical techniques performed in Room 124 of the Plutonium Facility. Processes involve analysis of plutonium and americium, RCRA metals, and trace metals. Originators provide samples, which are prepared for further analyses, such as inductively-coupled plasma (ICP) and X-ray energy spectroscopy (XES). Unused liquid samples are returned to the originator, sent to radiochemistry for counting, or sent to recovery operations.

R&D Efforts. Several small-scale R&D efforts primarily focused on plutonium recovery included the following activities:

- Fluoride sintering of PuO_2 took advantage of the presence of fluoride to aid the formation of a sintered mass of PuO_2 powder at temperatures above 700 °C. Spacing is correct (ACS)
- Chlorination of Pu oxides involved oxides with tantalum chips from Rocky Flats Environmental Technology Site (RFETS). Chlorination was used to recover plutonium from potassium chloride and sodium chloride matrices.
- Processing of molten-salt extraction (MSE) salts generated at LANL and RFETS.
- Recovery of plutonium from ash involving plutonium/thorium oxide mixtures.
- Processing of neptunium oxide and metal was performed to remove the protactinium daughter in order to use the neptunium for NDA standards.

Measurement/Detection Operations and Studies. P/S code VS involves the inspection of oxides and metals. Materials are retrieved from the vault, brought to the glovebox, inspected and sampled if necessary, then repackaged and returned to the vault. Assay methods include XES, laser based spectroscopy, and other spectroscopic techniques. Electron microscopy may be conducted on actinide samples in the future. In addition to elemental and isotopic analyses, other measurement studies

Should we say this? SKT

are designed to calculate the surface area and pore size distribution of a sample and to analyze its surface characteristics.

Pyrochemical Matrix Studies. A pyrochemical matrix study was conducted from 1986-1992 and involved rod milling prior to screening. This process had two objectives: (1) blending large batches of homogeneous plutonium metal oxides for pyrochemical operations, and (2) dissolution of plutonium metal oxides for nitrate operations. The process changed in August 1992 when a need developed to blend oxides to provide feed material for making NDA standards. In February 1995 the process again changed, with the objective of determining the effect of pyrochemical salt matrices on the accuracy of NDA measurements. Process activities involved crushing, pulverizing, blending, roasting, and sieving pyrochemical salts. The results were used to determine handling and processing of the salts and for correction of bias measurements. The feed material consisted of high-purity oxides to use in the fabrication of standards to be used at LANL and throughout the DOE complex.

Hydrothermal Processing. The hydrothermal processing procedure involves the reaction of aqueous/organic mixtures, pure organic liquids, or contaminated combustible solids (e.g., ion exchange resins, plastic filters, and cellulose rags) under supercritical conditions (i.e., high temperature and pressure). Feed streams include, but are not limited to, carbon tetrachloride, tributyl phosphate, and organic solvents. Process effluents are gases, liquids and salts. Organic components are oxidized to carbon dioxide. Nitrate contaminants are converted to nitrogen gas and some nitrous oxide. Components such as chlorine, sulfur, and phosphorus are oxidized and converted to acids or salts. Gases are liberated; solids and liquids are collected for recovery or disposal.

Electrochemistry Experiments. Electrochemistry methodologies were designed to decontaminate items, replace processes that produce large amounts of waste, or enhance chemical reactions. The process involved uranium decontamination of disassembled weapon components from various sites with various levels of surface contamination with plutonium. The operation was strictly an aqueous process in which an alkaline solution was reacted with the components to precipitate uranium. Significant amounts of metal could be stripped in a short period. The solution containing the precipitated uranium salts was then dried for mass balance.

Metallography. The purpose of the metallography operation is to characterize the microstructure of metallic or ceramic pieces to verify and establish the quality and effectiveness of welds. Materials examined consist of plutonium and uranium carbides, nitrides, and oxides, as well

as zirconium and tantalum alloys, and stainless steel. Metal pieces (pellets) are cut with a diamond saw. Ceramic pieces are subjected to grinding with standard metal grinding media (e.g., papers impregnated with silicon carbides and diamond). The materials are polished with several different chemical compounds.

Waste Management Operations. P/S code RD was used ~~only~~ in Room 432 in 1984–1986. It allowed for tracking of demonstration drums (one drum each year) that were packaged and prepared in accordance with the TA-55 Attachments to the Certification Plan (TWCP-701) to meet the WIPP requirements at that time. Packaging of these drums did not of itself result in the generation of TRU waste. The waste drums that were packaged contained non-mixed TRU waste.

in what room? 432

Operations under P/S code NCD occurred from April 1989 – April 1991 in Room 432. This P/S code was established to provide a mechanism for dealing with TRU drums that did not confirm specifications (e.g., recorded weight or nuclear material content). Non-confirming drums were temporarily set aside until such time as personnel could reprocess them under P/S code WM to correct the nonconfirming condition. After April 1991, nonconfirming drums were dealt with immediately, and P/S code NCD was no longer needed.

P/S code WM is currently limited to waste that arises from the TRU solid waste management operation in Room 432. This situation has been the case since the beginning of 1993. Room trash boxes from Building PF-4 have always been handled as low-level waste; however, the boxes were assayed to verify contamination levels, and any that were determined to be TRU waste were diverted to Room 432 for repackaging as such. From May 1987 through 1992, these boxes were created as P/S code XO or X0. These codes were changed to P/S code WM after 1992. Additional controls were placed on room trash after 1992. Trash was assayed with the Multiple Energy Gamma Assay System (MEGAS). When a container was rejected because of MEGAS data, the rejected container was returned to the originator for removal of any "hot" item(s). This process also allowed greater control to prevent discarding regulated materials (e.g., RCRA constituents) in room trash.

P/S code X0 was designated for waste materials that could not be associated with a specific room, such as a hallway, mezzanine offices, rest rooms, ~~and~~ change rooms, basement, pump rooms, and trolleys. The waste from all these areas, except the pump rooms and trolleys, would be low-level waste and no RCRA constituents would be associated with the waste items.

P/S code XO indicated waste materials that were generated within specific rooms but could not be associated with an individual P/S code in that room.

3.5.6 Special Processing

P/S codes ACC, ACD, DO, IAM, IX, PI, POSM, PPD, PX, RM, SB, SBB, SL, and VU

A detailed description of special processing is found in *Process Acceptable Knowledge Summary Report for Special Processing at TA-55* (TWCP-AK-2.1-007).

probably already defined - can just use R&D

Special Processing includes processing operations for Material Type (MT) 42, and research and development (R&D) activities for MT 52. (See Section 3.6.2 and Table 2 for descriptions of plutonium material types.) Because processing MT 42 is a smaller-scale version of the recovery processes used for MT 52, MT 42 processing has five main recovery steps:

- head-end operations
- nitrate ion exchange operations
- chloride ion exchange operations
- separation and purification by precipitation
- pyrochemical processes

Only head-end operations and separation by purification and precipitation are covered here, since ~~nitrate~~ chloride ion exchange operations, nitrate ~~chloride~~ ion exchange operations, and pyrochemical processes are covered briefly ~~elsewhere in this report.~~ in Sections 3.5.3, 3.5.7 and 3.5.8, respectively. Part ref to Section ?

Head-end operations leach tools, labware, crucibles, rags, etc. in nitric acid to remove recoverable plutonium. Plutonium oxide is typically calcined as part of head-end operations.

Separation and purification by precipitation is a method of plutonium removal from aqueous solutions. The most common precipitation methods utilize oxalate, hydroxide, and peroxide anions. By selectively precipitating the plutonium, many of the metals remain in solution, thereby purifying the plutonium.

All wastes generated by MT 52 R&D operations are replicated for MT 42 but carry different P/S codes to differentiate and identify the radionuclide content of the waste. Outputs from Special Processing include high purity metal for casting and machining.

3.5.7 Metal Operation Processes

P/S codes AO, ARI, BA, BC, BT, CA, CN, CO, CT, DA, DOP, DT, EL, ELW, EM, EVAC, FF, FSPF, GI, HG, ID, IN, ITF, ITF4, ITF7, JA, KBTF, MA, MBC, MOX, MW, OB, OM, PCH, PD, PE, PF, PH, PIG, RAP, RAP2, RL, RS, SRL, TIGR, UA, VD, WE, WLT

A detailed description of metal operation processes is found in *Process Acceptable Knowledge Summary Report for Metal Operation Processes at TA-55* (TWCP-AK-2.1-003).

The processes included in metal operations can be divided into three groups

- on-going metal operation~~s processes~~
- developmental metal operation~~s~~ ~~processes~~
- reactor fuel development ~~processes~~

The main goal of metal processes is to take the high purity metal produced by pyrochemical operations and produce shaped metal pieces. On-going metal operation processes include various R&D activities, alloy development, casting of metals, welding, coating, and machining/metalwork on various metals. Developmental metal operations include the Advanced Recovery and Integrated Extraction System (ARIES) project, assembly operations, burst testing of shells, experimental laser welding, furnace operations, and various other experimental activities. In reactor fuel development, enriched uranium oxide, depleted uranium oxide, and/or plutonium oxide feeds are blended and mixed with graphite, and various operations are performed to convert the feed material into pellets that can be used for fuel. Testing and R&D are done on the fuel pellets.

3.5.8 Pyrochemical Processes

P/S codes CRD, ER, MO, MP, Neptunium, OR, PK, PTP, RA, SCB, SD, SS, and SSMD

A detailed description of pyrochemical processes is found in *Process Acceptable Knowledge Summary Report for Pyrochemical Processes at TA-55* (TWCP-AK-2.1-006).

Pyrochemical processes include metal preparation, metal purification, and ancillary metal production operations. Pyrochemical process outputs are most often high-purity metal feed materials for metal operations.

Small globule, or

3.5.8.1 Metal preparation processes include the following:

Metal Preparation Line. The metal preparation line produces plutonium metal from fluoride salts. Hydrogen fluoride gas reacts with plutonium oxides obtained from calcination of oxalate or peroxide precipitates from the aqueous nitrate or chloride process lines. The plutonium compound is further reacted with various chemicals to produce plutonium metal, which can then be recovered as a button by breaking the crucible.

? do we need to define this?

Direct Oxide Reduction (DOR). In the single pass DOR process, plutonium oxide and calcium metal are reacted in molten calcium chloride ($CaCl_2$), or $CaCl_2$ mixed with calcium fluoride (CaF_2), to produce plutonium metal. The reaction is conducted in a magnesium oxide (MgO) crucible. After cooling, a plutonium metal button is removed by breaking the crucible. A layer of salt above the button contains unreacted oxide and metal shot, which ~~was~~ is sometimes recovered by addition of fresh salt plus additional calcium metal.

Multiple-Cycle Direct Oxide Reduction (MCDOR). To minimize the salt waste, the MCDOR process was started, in which the molten salt is regenerated by sparging the $CaCl_2$-CaO mixture with chlorine gas between multiple plutonium metal production runs. After approximately five cycles of metal production, the mixture is cooled and the salt and metal phases are separated.

3.5.8.2 Metal purification processes include the following:

Molten Salt Extraction (MSE). MSE is used to separate americium and the more reactive elements such as rare earth elements, alkali metals, and alkaline earth metals from plutonium metal (TWCP-352). This process is employed only if the americium content is greater than 1000 ppm. In the original process, which operated from 1979 to 1988, magnesium chloride ($MgCl_2$) was added to the impure plutonium metal in a molten salt of sodium chloride (NaCl) and potassium chloride (KCl), contained in a MgO crucible, and heated to 750°C. The magnesium chloride oxidized americium to $AmCl_3$, although some plutonium was also converted to the chloride salt form. In 1988, the MSE process was converted to use plutonium chloride ($PuCl_3$) produced by in-situ chlorination in a tantalum crucible. ~~In the LANL~~

All these are (all processes!)

~~process, 90~~ Ninety percent of the americium and 10 percent of the plutonium are transferred from the feed metal to the salt. After cooling, the salt and metal are mechanically separated. The salts are transferred to the salt stripping process.

Electrorefining (ER). The ER process takes impure metal from the MSE and MCDOR (DOR) processes and produces high purity plutonium metal. Impure plutonium is cast as an anode, which is then placed in a magnesium oxide crucible with a salt mixture, a metal cathode (typically tungsten), and a seeding reagent that is $MgCl_2$ or $PuCl_3$. After the anode and salt melt, current is applied to the system, and plutonium at the anode is oxidized to plutonium ions, ~~which~~ that travel to the cathode and are reduced back to the metal state. Impurities in the original plutonium anode that are less electroactive than plutonium (including cadmium, chromium, lead, and silver) remain in the anode, while impurities more electroactive than plutonium (including barium) ~~are left in~~ remain the molten salt. After cooling, the crucible is broken and the residues are physically separated from the high purity product metal. Anode heels were sent to pyroredox from 1984 to 1986. Currently, salts are sent to chloride operations or carbonate oxidation/distillation.

From 1987 to 1989, secondary solvent metals such as cadmium, bismuth, lead, and gallium were added to experimental studies of the ER process.

3.5.8.3 Ancillary metal production operations include the following:

Salt Stripping. The MSE and ER salts are further treated by salt stripping, oxygen sparging or carbonate oxidation, and salt distillation. The salt stripping process treats the residue by melting and stirring the salt with calcium metal in a magnesium oxide crucible at 850°C. This treatment reduces the plutonium in the salt to metal and allows the metal to coalesce for physical removal and recovery. After cooling, the crucible is broken and the metal physically separated and recycled to the ER process or burned to oxide and sent back through aqueous recovery. The crucible shards are leached in hydrochloric acid, then discarded.

Oxygen sparging and (since 1996) carbonate oxidation are used to ensure that any plutonium, americium, or metallic

sodium or potassium left in the salts are converted to nonpyrophoric oxide forms.

from February to June which months?

How fast are we working to resolve/define this lot?

Vanadium pentoxide (V_2O_5) was used in place of carbonate to convert metals to oxide as part of the salt stripping process ~~for a few months in~~ 1998. Wastes that potentially contain this chemical (HWN P120) ~~will be~~ are segregated into waste stream lot TA-55-19A (see Section 4.0).

Salt Distillation. Salt distillation allows the recovery of plutonium oxide from the chloride salt and produces purified chloride salt for reuse.

Pyroredox. The pyroredox operation was used to recover plutonium from spent anode heels in the mid- to late 1980s. The anode heel was polished with calcium metal to remove surface oxide, then oxidized to plutonium (III) with zinc chloride ($ZnCl_2$) in molten KCl, forming plutonium chloride ($PuCl_3$). Elements more electroactive than zinc (including barium) were oxidized into the salt phase, and the zinc formed a metal button. The salt was then mixed with calcium metal in $CaCl_2$ to reduce the plutonium to the metal phase, as well as reducing all elements less electroactive than calcium. The salt phase containing small amounts of the impurity barium was mechanically separated from the metal phase and discarded. The metal phase containing zinc was placed in the vault or further treated, and the plutonium eventually was routed back to ER.

Ingot Casting. Metal is melted in a MgO crucible to cast the ingot.

Metal Coalescence. Metal coalescence is used for plutonium turnings to coalesce the turnings into a metal button. Calcium metal and $CaCl_2$ are added to a MgO crucible along with the turnings and melted.

Metal Oxidation. Small pieces of metal remaining on furnace or crucible surfaces are collected for conversion to the oxide phase. These metal pieces are placed in a furnace for the conversion process. The oxide is then transferred to the vault.

Neptunium. ~~A campaign to work off~~ slang/ Neptunium residues stored in the vault ~~was undertaken in~~ 1993 ~~and was only active that year~~. were processed in

Pickling. Pickling (i.e., leaching metal with a strong acid) is typically a head-end operation. After a few furnace runs, plutonium metal begins to accumulate on tools and furnace parts, ~~It then~~ so it becomes necessary to leach the plutonium from these items. In addition, after calcium metal reduction processes such as metal preparation, direct oxide reduction, and molten salt extraction, plutonium metal will have an adherent skin of calcium metal. Hydrochloric acid is used to dissolve Pu from tantalum furnace parts, and nitric acid is used to pickle Pu from other metals.

Plutonium Trichloride Preparation. An intermediate process in Pu metal production prepared plutonium trichloride by bubbling a carrier gas (chlorine) through carbon tetrachloride and passing the mixed gas stream through a bed of plutonium oxide at 500°C–600°C before being absorbed in a 5–6 M (molar) potassium hydroxide solution. The carbon tetrachloride was broken down into phosgene, carbon monoxide, and carbon dioxide gases in this process, which was active between January 1987 and June 1989, at which time the process switched to the use of phosgene gas until the process ended in May 1991. Feed material was high purity oxides from the vault or from other P/S codes. The product plutonium trichloride was reduced to metal by the MSE or ER processes.

3.6 Material Inputs to the Waste Generation Processes

Material inputs to the waste generation processes derive from four general sources: (a) feed materials, (b) associated nuclear material types, (c) chemical use, and (d) ancillary material inputs such as those related to the use of laboratory equipment and materials and glovebox maintenance activities.

3.6.1 Feed Materials Identification

The feed materials for TA-55 processes that generate waste in waste streams TA-55-19 and TA-55-20 consist of the general types of materials listed in Table 1. These feed materials are obtained either from the storage vault, as process outputs from various P/S codes, or from sources outside TA-55, including other DOE facilities.

These feed materials fall into four general categories:

- pure Pu metal to be recycled from pits and sealed sources or to be reworked into desired shapes or chemical forms

Table 1. Feed Materials for Processes Contributing to Waste Streams TA-55-19 and TA-55-20

Feed Material CTV	Potential Presence of RCRA-Regulated Substances *	P/S Codes, Listed by Process
Analytical laboratory solutions	Potentially contaminated with RCRA-regulated constituents • All analytical laboratory solutions are potentially contaminated with chromium (D007), lead (D008), and mercury (D009) • CLS-1 solutions potentially contaminated with mercury (D009) and lead (D008), as well as RCRA-listed organic substances used as solvents, including acetone (F003), butyl alcohol (F003), carbon tetrachloride (D019), chlorobenzene (F002, D021), chloroform (D022), methanol (F003), methylene chloride (F002), tetrachloroethylene (F002, D039), xylene (F003) (CI-25/TWCP-3547).	Chloride operations: CLS, CW ~~CXL~~ (analytical laboratory solutions from LANL Group CLS-1); CSE, CXL, SE (other solutions) Miscellaneous operations: ACL, ICP Nitrate operations: CF, HP
Anode heels	Typically contaminated with RCRA-regulated heavy metals cadmium (D006), chromium (D007), lead (D008), and silver (D011). Heavy metals arsenic (D004), mercury (D009), and selenium (D010) are not present because they are volatilized from the Pu oxide feed at the high temperatures to which this material is subjected in P/S codes ER, RM, and SS (electrorefining step).	Nitrate operations: AS, BF, BU Pyrochemical processes: RA
Ash from P/S codes ETD, IS, SB, TDC, or from other DOE facilities	Usually suspect contaminated with barium (D005), cadmium (D006), chromium (D007), lead (D008), and silver (D011). Arsenic (D004), mercury (D009), and selenium (D010) metals are volatilized at high temperatures if present in the oxide and chloride forms.	Miscellaneous operations: CK, CV, FDL, FLU, SO, XP Nitrate operations: AL, AT, ATL, ED, HGMS, IS, MPD, PTS, RC, SC Special processing: ACD, IAM, SB, SL
Crucible pieces (tantalum, magnesium oxide)	Typically fairly pure, no RCRA substances present	Chloride operations: CL Nitrate operations: MAS, SC Special processing: ACD, SL
Disassembled weapons components (pit diassembly)	High-purity Pu and U material types, no RCRA substances present	Metal operation processes: ARI, CA, PH, SRL Miscellaneous operations: EDC Nitrate operations: BM, RB, RBJ

The information on this column is highly generalized.
*Applicability of specific HWNs to a process as result of the feed material must be determined on a case-by-case basis because the presence and fate of contaminants is time and function-dependent. These aspects are discussed in the process AK reports.

– heady ?

Table 1. (continued)

Feed Material (ct)	Potential Presence of RCRA-Regulated Substances	P/S Codes, Listed by Process
Experimental R&D feed materials; various isotopes and isotopic mixtures of actinides in various matrices	Variable purity, may or may not contain RCRA substances (or not) no RCRO substances present ?	Miscellaneous operations: AD, CV, EXT, HRS, RASS, SA, XES, XP Nitrate operations: MAS
Hydroxide cakes (process output from P/S codes CLS, CW, CXL, DO, POSM, PRR)	Typically contaminated with RCRA-regulated heavy metals cadmium (D006), lead (D008), mercury (D009), silver (D011), and possibly chromium (D007)	Miscellaneous operations: AD Nitrate operations: CD, HCD, HD, LG2 Special processing: DO, POSM
Miscellaneous materials contaminated with Pu (e.g., sand, slag, tools, crucibles, metal, glass, plastic, labware, scrap, rags, glovebox sweepings, pump oils, HEPA filters)	May be contaminated with RCRA-regulated heavy metals silver (D011), cadmium (D006), mercury (D009), lead (D008), and possibly chromium (D007)	Miscellaneous operations: APD Nitrate operations: ATL, BAC, CPOD, CR, ED, ETD, GMS, HGMS, IS (combustible material), LG1 (non-combustible material), MAG, MAS, MELL (cellulosic material), ML (metal equipment), NC (non-combustible material), NL (non-combustible material), PA (glovebox sweepings), PAF, RO (organics), SC, SP, TDC (cellulosic material), VC, ZD Pyrochemical processes: PK (hardware, metal, anode chips from other P/S codes) Special processing: ACD, DO, SB, SL
MSE salts	Typically fairly pure, suspect contaminated with barium (D005) ~~but no other RCRA substances present.~~	Chloride operations: MB, MS Miscellaneous operations: XP Nitrate operations: MB, PS
Neptunium residues from vault	No RCRA-regulated substances	Pyrochemical processes: Neptunium (only active in 1993)
Pu chlorides and fluorides	Variable purity, may or may not contain RCRA substances – RCRA ?	Miscellaneous operations: FDL, SO Pyrochemical processes: ER, SD, SS Special processing: RM

Feed Material	Potential Presence of RCRA-Regulated Substances	P/S Codes, Listed by Process
Pu metal or metal alloy from vault or from various P/S codes	High purity, no RCRA-regulated substances, unless noted otherwise	Metal operation processes: AO, ARI, BC, BT, CA, DA, ELW, EVAC, FSPF, ITF, ITF4, JA, KBTF, MA, MBC, MW, PCH (variable purity), PD, PE, PF, PH, RL, SRL, VD, WE, WLT Miscellaneous operations: AC, AC1, AC2, EXT, LIBS, ME, SA, SMP, VS Nitrate operations: ATL, BM, BU, MF, PAF, VP1 Pyrochemical processes: CRD (variable purity), MO, SCB, SS, SSMD Special processing: ACC (variable purity), PI (variable purity), PPD, POSM, RM, SB
Pu oxalates	Typically fairly pure, no RCRA substances present	Nitrate operations: CC, DF, HC
Pu oxides	Variable purity from P/S codes RB, RBJ and others, and from the vault; suspect contaminated with RCRA-regulated heavy metals cadmium (D006) chromium (D007), and lead (D008) High purity oxides from P/S codes CA, DO, and MA, and from the vault, no RCRA substances RCRA ?	Metal operation processes: DOP (high-purity Pu and other radionuclides as oxides) Miscellaneous operations: CK, CV, EOC, EXT, FDL, FLU, IB, IE, LI, LIBS, SO, STF, VS, XP Nitrate operations: ATL, BL, CH, CPOD, DP, ED, FC, LC, MPD, OD, PT, RB, RBJ, SP, SSD, UPS, US, US2 Pyrochemical processes: MP (generally high purity), OR (variable purity), PTP Special processing: DO, PI, PX, POSM, RM
Pu-Be sources	High purity constituents, no RCRA-regulated substances	Chloride operations: PB, PUB
Pyrochemical salts	Typically fairly pure, no RCRA substances other than barium (D005) are present	Chloride operations: MB, MS, PRR Miscellaneous operations: EXT, IB Nitrate operations: COD, COL, MB Special processing: DO
Reactor fuel pellets	High purity Pu and U material types, no RCRA-regulated substances	Metal operation processes: ME
Stainless steel and/or tantalum residues from decladding of Pu-Be sources	High purity metals, potential leaching of chromium (D007) from stainless steel if subjected to strong acid	Chloride operations: PUB

- intermediate Pu products in purification processes, in the form of solutions, oxides, hydroxides, salts, anode heels, etc.
- a wide variety of matrices contaminated with Pu above the DL, such as ash, salts, equipment, and solutions
- experimental R&D feed materials

3.6.2 Radionuclide Content Identification

The primary Pu material type inputs for TA-55 processes are listed in Table 2. The designation *material type* (e.g., MT 52) is used within the DOE Complex to describe the isotopic composition of common blends of radioactive materials used within the Complex. The material type notation was developed because it is a convenient way to describe material types that have very consistent isotopic compositions. Table 2 indicates the isotopic composition of the material types at the time the waste was characterized.

The material type provides the basis for estimating an upper bound for U-234, U-235, and Am-241 contents based on the rate of decay of their precursors, Pu-238, Pu-239 and Pu-241, respectively. The purpose of such bounding calculations is to provide a basis for identifying significant enrichment or depletion of one radionuclide versus another, based on radioassays of individual waste containers (see Section 14). The results of these calculations are tabulated in the last three columns of Table 2; assume that (a) none of these isotopes were initially present in the material, (b) the oldest Pu material in inventory dates back to 1 January 1960, and (c) the waste was packaged on 1 January 1996, making it 36 years old at that time (TWCP-698).

TA-55 processes are not expected to alter the Pu isotopic ratios of the feed material. The material type used in the process generating each waste item was documented on the WODF and DWLS (examples shown in Attachment 4). However, other radionuclides will be present in most of the process wastes from decay of a Pu precursor or as a contaminant in the feed material:

- Np-237, the decay product of Am-241 (half-life, 458 yr), is expected to be present ~~mostly~~ in minor amounts in most debris waste from processes at TA-55. ?
- In general, uranium and its isotopes are expected to be present only at trace levels, if at all, if the feed material did not purposely contain uranium. The primary uranium material type inputs for reactor fuel development activities and for pit disassembly at TA-55 are listed in Table 3.

Table 2. Average Isotopic Content of Plutonium Material Types and Enrichments

Material Type (MT)	Plutonium Isotope (~~Weight %~~ wt.%) and Half-Life						Upper Bounds for Dimensionless Weight Ratios[a]		
	Pu-238 (87.74 yr)	Pu-239 (24120 yr)	Pu-240 (6564 yr)	Pu-241 (14.35 yr)	Pu-242 (376,300 yr)	Pu-244 (8.26 x 10^7 yr)	U-234/ Total Pu	U-235/ Total Pu	Am-241/ Total Pu
MT 51	0.006	96.77	3.13	0.076	0.018	—	1×10^{-5}	0.001	0.0006
MT 52	0.01	93.78	6	0.2	0.02	—	2×10^{-5}	0.001	0.002
MT 53	0.03	91.08	8.45	0.366	0.071	—	7×10^{-5}	0.0009	0.003
MT 54	0.046	87.42	11.5	0.81	0.22	—	0.0001	0.0009	0.007
MT 55	0.06	83.88	14.73	1.03	0.304	—	0.0002	0.0009	0.009
MT 56	0.061	81.9	16.51	1.18	0.355	—	0.0002	0.0009	0.01
MT 57	0.433	74.63	20.7	2.55	1.69	—	0.001	0.0008	0.02
MT 42									
84%	1.02	1.37	10.32	3.13	84.14	0.02	0.003	1×10^{-5}	0.03
90%	0.72	1.26	6.4	1.86	89.77	—	0.002	1×10^{-5}	0.02
95%	0.45	0.56	2.47	0.906	95.58	0.029	0.001	6×10^{-6}	0.008
MT 83									
83%	83.89	13.8	1.9	0.32	0.09	—	0.26	0.0002	0.003
89%	89.26	10.07	0.633	0.021	0.015	—	0.28	0.0001	0.0002

[a] These ratios are calculated under the assumption that no chemical fractionation occurs and, hence, are intended to be used to identify fractionation when it is present by comparing these upper bounds to radioassay data.

Source: TWCP-698

Table 3. Average Isotopic Content of Uranium Material Types and Enrichments (~~Weight %~~ wt.%)

Material Type	U-234	U-235	U-236	U-238
MT 12	0.0015	0.23	0.008	99.77
MT 35	0.36	37.6	0.14	61.9
MT 36	0.63	62.44	0.18	36.75
MT 38	1.03	93.04	0.41	5.53
MT 39	1.32	97.52	0.17	0.99

Source: TWCP-698

- U-235 ingrowth from the decay of Pu-239 (half-life, 24,120 years) would be negligible due to the long half-life of Pu-239.

- U-234 would be present in MT 83 (and to a lesser extent in other Pu material types) as a decay product of Pu-238 (half-life, 87.74 years) (Table 2).

- Protactinium (Pa)-231, the decay-chain daughter of U-235, is expected to be present in trace amounts in some TA-55 wastes due to its widespread presence as ~~of~~ a contaminant in TA-55 operations (TWCP-5164, TWCP-5165).

- Cs-137 is a product of the spontaneous fission of Pu-238, Pu-239 and especially Pu-240, as well as a trace contaminant in purified plutonium from the production reactors (TWCP-5164, TWCP-5165). In the latter case, the remaining Cs ~~might~~ could be on the order of 0.5 ng/g Pu. In the former instance, the formation of Cs-137 due to spontaneous fission would lead to about 0.4 pg/g Pu in plutonium that is ~~ten~~ 10 years old. Because Cs-137 due to spontaneous fission is about a factor of a thousand less than that due to residual contamination from the original separation on the production fuel, the latter is the dominant source of Cs in TA-55 waste.

In general no correlation is expected to be seen among the different radioelements, Pu, Np, U, Pa or Am. The differences in valence states and chemical affinities among these elements is expected to result in substantial fractionation during several TA-55 processes, including ion exchange, solvent extraction, hydroxide precipitation, and dissolution.

Secondary radionuclides ~~will~~ are also ~~be~~ present in the waste due to processing of feed materials other than Pu (TWCP-698). Additional radionuclides expected to be present in each process were reviewed by a panel of experts at TA-55 and compiled in a memorandum according to P/S code (TWCP-882, amended by TWCP-5166), as summarized in Table 4. This list includes Am-241, Am-243, cerium (Ce)-144, curium (Cm)-244, Np-237, Pa-231, Pu-238, Th-230, Th-232, U-233, U-235, and U-238.

The possible presence of Cm-244 in TRU waste is of particular interest to radioassay operations because it can affect the choice of a radioassay ~~procedure~~ instrument to use for optimal results. Cm-244 was introduced in TA-55 operations in P/S code DOP, which started in 1988 (TWCP-5165). Material outputs from this process sometimes were sent to P/S codes IS or WE. Cm-244 could also be part of ~~debris waste~~ under P/S code CA because both operations took place in ~~the 300 area~~. Because only one room in this area is available for bagouts, TRU waste from P/S codes

~~bin~~.

the 300 Wing of PF-4.

what is this? previously discussed?
Room 300?

Table 4. Secondary Radionuclides in TA-55 TRU Waste

Secondary Radionuclide	P/S Code Generating Waste
Americium-241	AO, AP, CA, CD, CF, CLX, CXL, DOP, EV, FA, HCD, HD, HP, IA, LR, MA, OH, PI, PR, PRR, PS, SS, SX, WE, XP; plus trace amounts expected in TRU waste generated by nearly all P/S codes, due to ingrowth from Pu-241 decay. Waste could be either depleted or enriched in Am depending upon whether the source of contamination is the process product or the process residues.
Americium-243	BC, CA, DOP, JA, MA, PH, PI, SS, WE
Cerium-144	DOP, WE
Curium-244	DOP, IS (Mar-Apr 1987), WE
Neptunium-237	ATL, BC, CA, CF, DOP, ED, EV, IS, JA, MA, Neptunium PI, RB, RFX, WE; plus trace amounts expected in TRU waste generated by nearly all P/S codes, due to ingrowth from Am-241 decay
Protactinium-231	BC (1989), JA (1989), WE
Plutonium-238	TDC
Plutonium-241	EV, IS, TDC
Thorium-232	CF, DOP, PT, WE
Thorium-232 enriched with Thorium-230	BC, JA, WE
Uranium-233	DOP, WE
Uranium-235 or enriched uranium	CN, FF, GI, MW, OB, PD, PI, RS, SRL, UA; and P/S codes in nitrate operations (AL, AO, AP, AS, AT, ATL, BAC, BF, BL, BM, BU, CC, CD, CF, CH, COD, COL, CPOD, CR, DF, DP, DS, ED, ETD, EV, FA, FC, FX, GMS, HC, HCD, HD, HGMS, HP, HRA, IA, IS, LC, LG1, LG2, LR, MAG, MAS, MB, MELL, MF, ML, MPD, NC, NL, NR, OD, OH, OY, PA, PAF, PR, PS, PT, PTS, RB, RBJ, RC, RCM, RFX, RO, RR, SC, SP, SSD, SX, TDC, UPS, US, US2, VC, VP1, VP2, VP3, VUL, ZD)
U-238 or depleted uranium	BC, CN, FF, GI, JA, LC, MW, OB, PD, RC, RS, SRL, UA, UPS, US, WE,; and P/S codes in nitrate operations (AL, AO, AP, AS, AT, ATL, BAC, BF, BL, BM, BU, CC, CD, CF, CH, COD, COL, CPOD, CR, DF, DP, DS, ED, ETD, EV, FA, FC, FX, GMS, HC, HCD, HD, HGMS, HP, HRA, IA, IS, LC, LG1, LG2, LR, MAG, MAS, MB, MELL, MF, ML, MPD, NC, NL, NR, OD, OH, OY, PA, PAF, PR, PS, PT, PTS, RB, RBJ, RC, RCM, RFX, RO, RR, SC, SP, SSD, SX, TDC, UPS, US, US2, VC, VP1, VP2, VP3, VUL, ZD)

Sources: TWCP-882, TWCP-5166, TWCP-AK-2.1-003, TWCP-AK-2.1-005

DOP and CA was sometimes combined. In addition, because rags from DOP were sent to IS, Cm-244 could be present in the ash produced by this operation, which is then processed through nitrate aqueous recovery operations. Some unknown fraction of the Cm-244 could ultimately end up in the evaporator bottoms which are then immobilized in cement in P/S code CF. In any case, however, Cm-244 is not expected to be present in any waste generated before 1988.

During TWCP characterization, the contents of each waste package undergo non-destructive analysis to provide detailed radioisotopic data. These data ~~will be~~ are used to evaluate the accuracy of AK information in accordance with *Waste Characterization Data Reconciliation with Acceptable Knowledge* (TWCP-DTP-1.2-064). ~~The results of these~~ The assay results are summarized in Section 14.2.

3.6.3 Chemical Content Identification

Chemical contents of process inputs and outputs were compiled from chemical lists contained in procedures reviewed during the process AK search and from subject matter expert (SME) input. Individual process AK reports contain detailed assessments of these chemical inputs, and of the applicability of EPA HWNs. In this section, discussion of chemical inputs are divided into the following categories:

caps?

- Acids and bases
- Gases and cryogenic fluids
- Metals
- Inorganic chemicals
- Organic chemicals

be consistent

3.6.3.1 *Acids and bases*. Acids used in the TA-55 processes covered in this report are ascorbic acid, formic acid, hydrochloric acid, hydrofluoric acid, nitric acid, oxalic acid, perchloric acid, stearic acid, sulfuric acid, and superacids (e.g., HSO_3F). Bases used in these processes are calcium hydroxide, magnesium hydroxide, potassium hydroxide, and sodium hydroxide. No EPA HWNs are applicable to the use of these chemicals in the TA-55 processes for the following reasons:

phosphoric acid,

- D002 (corrosivity) and D003 (reactivity) do not apply to the solid debris waste because there are no free liquids in this waste.

- D001 (ignitability) and D003 (reactivity) do not apply to wastes in waste streams TA-55-19 ~~or~~ (including TA-55-19A) despite

the use of spent non-halogenated solvents (HWN F003) and the possible production of perchlorate salts in perchloric acid solutions for the following reasons:

- Perchloric acid solutions are sent to cement fixation.
- Perchlorate salts used in P/S code FF were sent to cement fixation (~~TWCP-5157~~, TWCP-5158).
- Any perchlorate salts that might be present on rags are removed when the rags are rinsed before being discarded.
- Solutions containing spent non-halogenated solvents are sent to the RLWTF if they are below the DL for Pu. Spell out
- Solutions containing spent solvents and above the DL for Pu are further treated by aqueous recovery processes as part of routine chloride and nitrate operations. Aqueous recovery involves dissolving any solid Pu in hydrochloric or nitric acid, followed by ion exchange to extract the Pu. The processed solutions are below the DL for Pu and are either sent to the RLWTF or to the evaporator for volume reduction. Evaporator bottoms are fixed in cement, a waste form for which ignitability is not a concern.
- Rags, if contaminated with spent solvents and above the DL for Pu, are thermally decomposed, which destroys any organic component.
- Although contaminated rags that are below the DL for Pu are discarded as combustible debris, headspace gas analyses support the expectation that the solvents are not present in the packaged waste at levels of concern. No! at regulatory levels? at measurable levels?
- In addition, 100 percent of the waste containers are subjected to headspace gas analysis. Any container showing more valuable over 500 ppm total flammable volatile organic compounds (VOCs) is prohibited from being shipped to the WIPP. (For comparison, the explosive limit for acetone is 25,000 ppm.)

only abbreviate when used w/ numbers eg Pu-238

Jim, your call!

below ~~levels~~ the limits established by the WIPP WAC.

WIPP WAC

- Formic acid and hydrofluoric acid are listed in Appendix VIII of 40 CFR Part 261, for their corrosive and toxic characteristics, with EPA HWNs U123 and U134. However, these HWNs are not applicable to the manner

in which these chemicals were used ~~and discarded~~ in the processes covered by this report.

Awkward Need to clarify

- None of these acids or bases are F, K or P-listed chemicals

Need to add Note about 19A lot?

3.6.3.2 *Gases and cryogenic fluids.* The following gases and cryogenic fluids used in the TA-55 processes are not identified as having hazardous characteristics in 40 CFR Part 261, including Appendix VIII in that regulation:

Caps?

- argon
- carbon dioxide
- chlorine
- dioxygen difluoride (FOOF)
- halogen fluorides
- hexafluoroethane
- hydrogen chloride
- krypton fluoride
- methane
- nitrogen (gas)
- nitrogen (liquid)
- perfluoropropane
- tetrafluoromethane

The following gases used in the TA-55 processes are identified in Appendix VIII of 40 CFR Part 261 as having hazardous characteristics. The chemical name is followed by the listed EPA HWN and the P/S codes in which the gas is used:

- Fluorine (P056) is used in P/S codes CV, FDL, FLU, PI, SO
- Hydrogen fluoride (U134) is used in P/S codes MP, PI
- Nitrogen dioxide (P078) is used in P/S code HRS
- Phosgene gas (P095) is used in P/S code PTP

No EPA HWNs are applicable to the use of these gases in the TA-55 processes. Compressed gas cylinders are kept outside of the gloveboxes; most are even outside the building, and the gases are plumbed into the glovebox. Thus, the gas cylinders are not discarded with TRU wastes. Additional reasons are as follows:

the HWNs are not applicable

?

- D002 (corrosivity) does not apply to the use of hydrogen fluoride because there are no free liquids in the solid TRU waste.

- D003 (reactivity) does not apply to phosgene because any excess chemical was passed through a solution of sodium hydroxide or potassium hydroxide, thereby producing a chloride salt solution.

- P056 (fluorine), P078 (nitrogen dioxide) and P095 (phosgene) are not applicable to the listed TA-55 processes because of the manner in which these gases are used ~~and discarded~~ in the processes covered by this report.

- Hydrogen fluoride (U134) is listed in Appendix VIII of 40 CFR Part 261 for its corrosive and toxic characteristics. However, this code is not applicable to the manner in which this gas is used ~~and discarded~~ in the processes covered by this report.

3.6.3.3 *Metals*. The following metals used in the TA-55 processes are not identified as having hazardous characteristics in 40 CFR Part 261, including Appendix VIII of that regulation: bismuth, bismuth-tin alloy, calcium, copper wool, gallium (metal, oxide or salt), gold, lanthanides, lutetium, niobium +1 percent zirconium metal, platinum, platinum-rhodium alloy, tantalum (metal, alloy, oxide or salt), titanium, uranium powder (depleted), vanadium, and zirconium alloy.

Several metals used in TA-55 processes are identified in 40 CFR Part 261 or in Appendix VIII of that regulation as having hazardous characteristics. The bullets below list the chemical name, its listed EPA HWN, the P/S codes in which the metal is used, and the applicability of the EPA HWNs for use of these metals in the TA-55 processes:

- Alkaline earth metals (D003) were used in P/S codes AC, AC1 and AC2; it is possible that one or more of these were pyrophoric. However, EPA HWN D003 does not apply to P/S codes AC, AC1, or AC2 because the metals are consumed or oxidized before discarding.

- Arsenic (D004) was used in P/S code PE between 1984 and 1985, and EPA HWN D004 is applicable to P/S code PE during this period.

perchlorate, molybdenum oxide, phosphates, Portland cement, potassium chloride, potassium fluoride, potassium permanganate, potassium thiocyanate, silicone lubricant, sodium bicarbonate, sodium carbonate, sodium chloride, sodium chlorite, sodium citrate retarder, sodium dithionate, sodium nitrate, sodium nitrite, sodium oxalate, sodium sulfate, sodium tetraborate, stannous chloride, thorium oxide, uranium oxide (depleted), zinc chloride, zinc stearate, and zirconium carbide. Some processes indicated the use of nitrate, chloride, carbonate, bicarbonate, oxalate, and nitrite salts of sodium, potassium, lithium, magnesium, calcium, and iron.

Several inorganic chemicals used in TA-55 processes are identified in 40 CFR Part 261 or in Appendix VIII of that regulation as having hazardous characteristics. Table 5 lists these chemicals, their HWN, P/S codes in which they were used, and the applicability of the HWNs to the use of these chemicals in TA-55 processes.

3.6.3.5 *Organic chemicals.* The following organic chemicals used in the TA-55 processes are not identified as having hazardous characteristics in 40 CFR Part 261, including Appendix VIII in that regulation: 1-propanol, 3-in-1 household oil, alkylating agents (unspecified), bromobenzene, bromocresol purple, carbon tetrafluoride, Citrapeel, DBBP (dibutyl butyl-phosphonate), DBBP (dibutyl butyl-phosphonate)/Isopar (isoparaffinic hydrocarbon solvent), diethyl oxalate, dihexyl n,n-diethylcarbamoylmethyl phosphonate (DHDCMP), diisopropyl benzene, Dow Corning 2000 Oil, Dowanol 80 (long-chain alcohol), ethanol, ethylene glycol, Fantastic, formamide, Fomblin brand pump oil, GoJo cleaner (kerosene derivative), hexane, hydrazine dihydrochloride, hydrazine hydrochloride, ion exchange resin, isopropanol, kerosene, Metalprep 79 (phosphoric acid-based metal cleaner), MolyKote, n-dodecane, Nuetracleaner #1, Nuetracleaner #2, octylphenyl diisobutyl carbamoylmethyl phosphine oxide (CMPO), oil (engine), organic liquid emulsifier, Organicstrip, perchlorocarbons, phenolphthalein, phosphate buffer ~~solution, phosphine oxide~~, phthalate buffer solution, polyethylene glycol, polyoxyethylene-20-sorbitan laurate (surfactant), SF-2I (as coolant), silicon adhesive, silicon defoamer, sugar, surfactants, tetraethylamine hydrochloride, tetraethylamine hydroxide, tetraethylammonium hydroxide, Texaco Regal 32 oil (cutting oil), thionyl chloride, tributyl

(unspecified)

Compounds

Table 5. Use of RCRA-Regulated Inorganic Chemicals in TA-55 Processes

Initial caps or heading?

Inorganic chemicals and P/S codes in which they were used	~~The following summarizes the applicability of~~ RCRA D-listings and P-listings due to metals used in the processes.
Hydrogen peroxide	D001 (ignitability—oxidizer) and D003 (reactivity) do not apply to the use of hydrogen peroxide because there are no free liquids in the TRU solid waste
Lead hydroxide, oxide, or nitrate (P/S code AD)	D008 (lead) applies to P/S code AD.
Mercuric nitrate (P/S codes VP1 and VP3)	D009 (mercury) applies to P/S codes VP1 and VP3. Mercuric nitrate is used as a catalyst in P/S code VP1; the hydroxide cake produced in VP1 is processed in P/S code VP3.
Potassium dichromate (P/S codes AD, CS, CSE, DO, and SE)	D007 (chromium) applies to P/S codes AD, CS, CSE, DO, and SE because of the use of potassium dichromate as a titration endpoint indicator until end of 1993. The solution and precipitates were processed by hydroxide precipitation under the same codes. The chromium was incorporated as a contaminant in the hydroxide cakes.
Silver nitrate and other silver salts (P/S codes AC1, CPOD, CS, CSE, DO, SE)	D011 (silver) applies to P/S codes CW and CX due to the use of silver nitrate for chloride titrations under P/S codes CS, CSE and SE until 1993. The solution and precipitates were processed by hydroxide precipitation under P/S codes CW and CX. Silver was incorporated as a contaminant in the hydroxide cakes. D011 (silver) applies to P/S code CPOD due to the use of silver nitrate as a catalyst from 1990 to 1994. D011 (silver) applies to P/S code AC1 due to the use of silver salts.
Sodium chromate (P/S code PT)	D007 (chromium) applies to P/S code PT due to the use of sodium chromate in the separation of thorium from plutonium and americium.
Uranium nitride, depleted (P/S code FF)	D003 (reactivity) does not apply to the use of uranium nitride in P/S code FF. Although this chemical is pyrophoric, its disposal in an oxidizing environment eliminates this characteristic because it is converted to uranium oxide. Uranium nitride is oxidized in the passivation furnace (P/S code PA) prior to discard.
Vanadium pentoxide (P/S code SD and SS)	P120 (vanadium pentoxide) applies to waste generated under P/S code SD from February to March 1998, and under P/S code SS from May 27, 1998 to June 10, 1998.
Magnesium perchlorate (P/S code FF)	D001 (oxidizer) does not apply to the use of this chemical in P/S code FF because it was ~~discarded~~ sent to ~~into the~~ cement ~~waste stream~~ (TWCP-5158).

Magnesium perchlorate (TWCP-5158)

Insert new row

fixation

phosphate (TBP), tributyl phosphate (TBP)/Isopar (isoparaffinic hydrocarbon solvent), tributyl phosphate and iodine in kerosene, trioctylphosphine oxide (TOPO), urea, Vactra oil, vacuum grease, vacuum pump oil, WD-40, and Windex.

Several organic chemicals used in TA-55 processes are identified in 40 CFR Part 261 or in Appendix VIII of that regulation as having hazardous characteristics. Table 6 lists these chemicals, their HWNs, P/S codes in which they were used, and the applicability of the HWNs to the use of these chemicals in TA-55 processes.

4.0 DIVISION OF THE WASTE STREAM INTO LOTS

Waste containers in a waste stream are characterized as a campaign, in which the targeted group of waste containers to be characterized are selected based on criteria such as availability of the waste containers, waste loading level, availability of waste generator records, and hazardous waste numbers. TA-55-19A is one subset (i.e., lot) of waste stream TA-55-19. Waste in this lot, which ~~is expected to~~ consist of ~~only a few~~ drums, is identical to the rest of the waste stream except for the possibility that the drums may contain vanadium pentoxide (EPA HWN P120), which was used only between 02/01/98 and 06/10/98 in two specific P/S codes.

delete

Have to do this

~~TA-55-19A is not fully defined in the sense that a list of specific waste containers in this lot has not yet been prepared. This is because P/S codes are not always explicitly identified for waste items in TA-55 waste containers. However, the possibility of extracting this information from the waste item identifiers is being evaluated. If successful, this action will permit a listing of waste containers assigned to TA-55-19A.~~

put this info up front in Summary

5.0 CORRELATIONS BETWEEN WASTE STREAMS

Waste Streams TA-55-19 and TA-55-20 have been discussed together in this AK Summary Report. These waste streams are similar in physical form and waste material content. They differ only in that TA-55-19 is assigned EPA HWNs based on P/S code information, whereas TA-55-20 contains non-mixed waste.

Other waste streams resulting from the same plutonium processing activities at TA-55 but differing in physical form and waste matrix code are listed in the Sampling Plan. These include waste streams for more specific types of waste such as metal debris, glass, graphite, HEPA filters, and cemented waste, as well as less specific waste streams such as combustible/noncombustible debris.

Table 6. Use of RCRA-Regulated Organic Chemicals in TA-55 Processes

Organic Chemical and P/S Codes in Which It Was Used	Comments on Applicability of RCRA Codes
Acetone (P/S codes FF, ME, and MOX)	• F003 applies to P/S code ME because it may have been used in the glovebox for cleaning. • F003 does not apply to P/S code FF or MOX because it was only used outside the glovebox.
Acetonitrile (P/S code AC2)	• (Appendix VIII chemical,) U003 does not apply due to the manner in which this chemical is used in P/S code AC2.
Benzene (P/S codes AC, AC1, AC2, and SA)	• D018 (benzene) applies to P/S codes AC, AC1, AC2, and SA • F005 applies to P/S codes AC, AC1, AC2, and SA, in which benzene was used as a solvent
Carbon tetrachloride (P/S codes AD, CV, PTP, and PX)	• D019 (carbon tetrachloride) applies to P/S codes AD, CV, PTP and PX. This chemical was used in PTP between 1/87 and 6/89. • F002 does not apply to P/S codes AD, CV, PTP, or PX because it was not used as a solvent or for degreasing.
Chloroform (P/S codes AC, AC1, AC2, APD, FF, and XO)	• D022 (chloroform) applies to P/S codes AC, AC1, AC2, APD, FF and XO. Concentrations in P/S code FF are expected to be below RCRA threshold because freeze-drying should have removed most, if not all, of the residual chloroform before the microspheres were taken into the glovebox for sintering.
Diethyl ether (P/S code SA)	• F003 applies to P/S code SA because of solvent use.
Freon and Freon TF (P/S codes CA, DA, MA, MW, PD, PF, SCB, SRL, UA, VD, WE and XO)	• F002 applies to P/S codes DA, MA and XO. • F002 does not apply to P/S codes CA, MW, PD, SCB, SRL, UA, VD and WE. Although Freon TF is used as a solvent to clean metal parts, the parts are routinely air-dried to avoid the need for cellulosic wipes. • F002 does not apply to P/S code PF because Freon was used as a coolant for a cutting saw, not as a solvent.
Methanol (P/S codes AD and SO)	• F003 applies to P/S code AD because it may have been used for cleaning inside the glovebox. • F003 does not apply to P/S code SO because it was used in a cold trap outside the glovebox.
Methylene chloride (P/S code AC1)	• F002 applies to P/S code AC1 because this chemical was used as a solvent (MA) and a paint stripper (XO).
Methyl ethyl ketone (P/S codes MA and XO)	• D035 (methyl ethyl ketone) applies to P/S codes MA and XO. • F005 applies to P/S codes MA and XO, in which methyl ethyl ketone was used as a solvent (MA and XO).
Pyridine (P/S codes AC and SA)	• D038 (pyridine) applies to P/S codes AC, AC2 and SA. • F005 applies to P/S codes AC, AC2 and SA, in which pyridine was used as solvent.
Tap Magic (contains 1,1,1 trichloroethane) (P/S code MA)	• F002 does not apply to P/S code MA because Tap Magic is used as a metal cutting fluid or coolant, not as a solvent. Its use was discontinued in 1992.

Borda ?

Heading ?

Organic Chemical and P/S Codes in Which It Was Used	Comments on Applicability of RCRA Codes
Tetrachloroethane (not used)	• No RCRA codes apply to tetrachloroethane, an Appendix VIII chemical. Although it is listed on the chemical inventory for metal operations, it was never used in glovebox operations.
Tetrachloroethylene (P/S codes AD, APD, CSE, CV and SE)	• D039 (tetrachloroethylene) applies to P/S codes AD, APD, CSE and SE in which it was used until 1992. • D039 does not apply to P/S code CV because it was used as a coolant outside the glovebox. • F002 applies to P/S codes AD, APD, CSE and SE. Its use as a solvent in P/S code CSE and SE ended in 1992. • F002 does not apply to P/S code CV because it was only used as a coolant outside the glovebox.
Tetrahydrofuran (P/S codes AC, AC2, and SA)	• U213 may possibly apply to P/S codes AC, AC2, and SA. Its applicability is currently under investigation.
Toluene (P/S codes AC, AC2 and SA)	• F005 applies to P/S codes AC, AC2 and SA because toluene was used as a solvent.
Trichloroethylene (P/S codes CK, EL, FF, MA, ME, and XO)	• D040 (trichloroethylene) applies to P/S codes EL, FF, MA, ME, and XO. • D040 does not apply to P/S code CK because this chemical was used as a coolant outside the glovebox. • F001 applies to P/S code MA, in which trichloroethylene was used as a degreaser during final cleaning of metal parts from 1979 to 1992, resuming again in February 2000. • F002 does not apply to P/S codes EL or FF, in which it was used as a lubricant for a cutting saw, not as a solvent.

6.0 ASSIGNMENT OF WASTE MATRIX CODES

The waste matrix code S5300 is assigned to the waste streams TA-55-19 and TA-55-20 based on waste generation practices described in the TA-55 Waste Management Procedure, 1996 (TWCP-351), description of past segregation practices (TWCP-701, Section 2.1, page 4 of 43), and TA-55 process AK reports (TWCP-AK-2.1-002; TWCP-AK-2.1-003; TWCP-AK-2.1-004; TWCP-AK-2.1-005; TWCP-AK-2.1-006; and TWCP-AK-2.1-007). A more detailed waste matrix code cannot be assigned to the TA-55-19 and TA-55-20 waste streams because TA-55 waste management personnel did not segregate plastic waste from cellulosic waste.

this is still a draft until Rev 19 of SARP is approval - Might want to use Rev 12

The following codes also apply to waste streams TA-55-19 and TA-55-20 from the Transuranic Waste Baseline Inventory Report (TWBIR), the TRUPACT II Content Code (TRUCON) (DOE/WIPP-89-004/Rev.12), the Radioactive Solid Waste Disposal (RSWD), and the Item Description Code (IDC) (Sampling Plan).

Rev. 12

- TWBIR LA-M16 (TA-55-19) and LA-T16 (TA-55-20)
- TRUCON LA 116A, LA 116B, LA 116C, LA 116D, LA 116E, LA 116F, LA 116H, LA 116I
- RSWD A14, A15, A16, A17, A18, A60
- IDC 004 (combustible waste)

7.0 ASSIGNMENT OF WASTE MATERIAL PARAMETER CODES

The TA-55 Plutonium Facility generates contaminated combustible debris waste primarily from:

- Plastic materials that result in combustible waste such as Tygon tubing, polyvinyl chloride vials, plastic bags, old bag-out stubs, etc.
- Cellulose-based cleaning aids and personal protective equipment such as rags, paper wipes, laboratory coats, coveralls, booties, etc.
- Rubber and Teflon-based products used in the operations, such as rubber gloves, Teflon tape, gaskets, stoppers, etc.

The following waste material parameter codes (WMP) are assigned to waste streams TA-55-19 and TA-55-20 based on this information and knowledge of waste generation practices described in the TA-55 Waste Management Procedures (see Section 3.2):

- Cellulosics
- Plastics (waste materials)

- Rubber
- Steel (packaging materials)
- Plastics (packaging materials)
- Iron-based metals/alloys (less than 5 percent by volume)

These WMP codes have been verified with WIPP-compliant waste characterization data from real-time radiography and visual examination (Section 14).

8.0 ASSIGNMENT OF EPA HAZARDOUS WASTE NUMBERS

Unless AK info. to the contrary (e.g. for P120)

NOTE: Although the applicability of several of the EPA HWNs discussed below are time-dependent, the period of HWN applicability should generally be extended to two years following cessation of the use of a given listed chemical. This recommendation is based on the observation that a single waste container may stay open for several months, and contain waste items generated over a span of time constituting a year or more (TWCP-5086).

unless AK information is available ~~that~~ to restrict the applicability to a shorter time period.

So, what are dates you've given earlier (- the 2 yrs or + the 2 yrs)?

8.1 F, K, P, and U Listings

No K-listings apply to any of the debris waste generated by the P/S codes covered by this report.

The following P/S codes require HWN assignments due to the presence or use of F-listed chemicals. In many cases, the applicability of the HWN is limited to waste generated during a specific period, as discussed in the appropriate process AK report.

• AC, AC1, AC2, AC3	F002, F005
• AD	F002, F003
• APD	F002, F003
• CF	F002, F003
• CLS	F002, F003
• CSE	F002
• CW	F002, F003
• DA	F002
• HP	F002, F003
• MA	F001, F005
• SA	F002, F003, F005
• SE	F002
• WM	F001, F002, F005 (No F-listings apply after 1993)
• X0, XO	F001, F002, F005

In addition, debris waste generated under P/S codes SD and SS between 02/01/98 and 06/10/98 is assigned EPA HWN P120 (vanadium pentoxide). ~~These~~ To be conservative, this ~~co~~ HWN is assigned to waste containers ~~pac~~ with packaging dates extending to the end of December 1998.

~~plus 2 yrs~~ ?

~~Extend to end of~~ ~~Dec 98~~

stet

It is possible that waste generated under P/S codes AC, AC2, and SA may require the assignment of EPA HWN U213 (tetrahydrofuran). This possibility is being investigated.

Because waste items from any of these P/S codes may be present in any given container of combustible debris waste, waste stream TA-55-19 (including lot TA-55-19A) is conservatively assigned the F-listings of F001, F002, F003, and F005. TA-55-19A is segregated for waste with the P-listing of P120. Waste containers assigned to waste stream TA-55-20 only contain items with known P/S codes that do not carry any EPA HWNs.

The reliability of this AK information can be assessed in part based on a review of headspace gas analyses for containers assigned to waste stream TA-55-19 (Section 14.4).

8.2 Toxicity Listings

~~Both~~ TA-55-19 ~~and~~ (including TA-55-19A) ~~are~~ is conservatively assigned the D-listings of D004, D005, D006, D007, D008, D009, D010, D011, D018, D019, D021, D022, D035, D038, D039, and D040.

TA-55-20 has no D-listings.

No D-listings are applicable to combustible debris waste generated by the following P/S codes: AC3 (inactive), ACC, AO (Assembly Operation), AO (Americium Processing Calcination), ARI, BA, BAC, BC, BL, BM, BT, CA, CC, CH, CN, CO, COD, CR, CRD, CT, DF, DP, DT, ELW, EM, EVAC, FA, FC, FSPF, GI, GMS, HC, HG, HRS, ID, IN, ITF, ITF4, JA, LC, LIBS, MAG, MAS, MBC, MF, MO, MOX, MP, MW, NCD, NEPTUNIUM, NR, OB, OM, OR, OY, PA, PAF, PD, PF, PH, PI, PIG, PPD, PR, PS, RA, RAP, RAP2, RB, RBJ, RCM, RD, RFX, RL, RM, RS, SBB, SCB, SMP, SRL, SX, TIGR, UA, UPS, US, US2, VD, VP2, VS, WE,WLT, and ZD.

Based on information in the TA-55 process AK reports, combustible debris waste generated by the following P/S codes are conservatively assigned EPA HWNs due to the potential presence of D-listed constituents. In many cases, the applicability of the HWN is limited to waste generated during a specific period of time, as discussed in the appropriate process AK report. If a D-listed constituent is known to be present in the waste at some level, the D-code is conservatively assigned unless analytical data confirm that its concentration is below the regulatory level.

Are these supposed to be consistent w/ Table 1?

No, stet

AC	D007, D009, D011, D018, D022, D038
AC1	D007, D009, D011, D018, D022
AC2	D007, D009, D011, D018, D022, D038
ACD	D005, D006, D007, D008, D011

Table 1 has no 005 but does have 009

Stet

ACL	D007, D009
AD	D004, D005, D006, D007, D008, D009, D010, D011, D019, D039
AL	D005, D006, D007, D008, D011 in Table 1 – others not
AP	D007, D009
APD	D007, D008, D009, D019, D021, D022, D039 – See Table 1, 2nd pg – 011 ?
AS	D006, D007, D008, D011
AT	D005, D006, D007, D008, D011
ATL	D005, D006, D007, D008, D011 – See Table 1
AX	D007, D009
BF	D006, D007, D008, D011
BU	D006, D007, D008, D011
CD	D006, D007, D008, D009, D011
CF	D007, D008, D009, D011, D019, D021, D022, D039
CK	D005, D006, D007, D008, D009, D011
CL	D007, D008, D009
CLRD	D007, D008, D009
CLS	D007, D008, D009, D019, D021, D022, D039
COL	D005
CPOD	D011 – See Table 1
CS	D007, D008, D009
CSE	D007, D008, D009, D039
CV	D005, D006, D007, D008, D009, D011, D019
CW	D007, D008, D009, D011, D019, D021, D022, D039
CX	D007, D008, D009, D011
CXL	D007, D008, D009
DO	D007, D011 (no D-listed chemicals used after 1993) See Table 1, pg 2
DOP	D008
DS	D006, D007, D008, D009, D011
ED	D005, D006, D007, D008, D011 005 ?
EDC	D007 – ? not in Table 1
EL	D040
EOC	D007, D009
ER	D006, D008
ETD	D005, D006, D007, D008, D011 005 ?
EV	D006, D007, D008, D009, D011
EXT	D005, D006, D007, D008, D009, D011
FDL	D004, D005, D006, D007, D008, D009, D010, D011
FF	D022, D040

ACD – See Table 1

BAC?

See Table 1 –

says no RCRA

CR?

Stet

FLU	D004, D005, D006, D007, D008, D009, D010, D011
FX	D006, D007, D008, D009, D011
GMS ? HCD	D006, D007, D008, D009, D011
HD	D006, D007, D008, D009, D011
HGMS	D006, D007, D008, D009, D011
HP	D007, D008, D009, D011, D019, D021, D022, D039
HRA	D005, D006, D007, D008, D009, D011
IA	D006, D007, D008, D009, D011
IAM	D005, D006, D007, D008, D011
IB	D005, D006, D007, D008, D009, D011
ICP	D007, D009
IE	D005, D006, D007, D008, D009, D011
IS	D005, D006, D007, D008, D011 -005 ?
IX	D006, D007, D008, D009, D011
KBTF	D008
LD	D007, D008, D009
LG1	D006, D008 - See Table 1
LG2	D006, D007, D008, D009, D011
LI	D005, D006, D007, D008, D009, D011
LR	D006, D007, D008, D009, D011
MA	D035, D040
MAG ? MB	D007, D008, D009 - See Table 1
ME	D007, D040
MAS ? MELL	D006, D007, D008, D009, D011
ML	D006, D008 - See Table 1
MPD	D005, D006, D007, D008, D011
MS	D007, D008, D009 - See Table 1
NC	D006, D008
NL	D006, D008 - See Table 1
OD	D006, D007, D008
OH	D006, D007, D008, D009, D011
PA ? PB	D007, D008, D009
PAF ? PCH	D007
PE	D004 (1984–1985)
PK	D006, D007, D008, D011 - See Table 1
POSM	D007, D011 - See Table 1, pg 2
PRR	D007, D009
PT	D007
PTP	D019

PTS	D005, D006, D007, D008, D011
PUB	D007, D008, D009
PX	D006, D008, D019
RASS/RSS	D004, D005, D006, D007, D008, D009, D010, D011, D019
RC	D005, D006, D007, D008, D011
RO	D006, D008, D040
RR	D006, D007, D008, D009, D011
SA	D007, D009, D018, D038
SB	D005, D006, D007, D008, D011
SC	D005, D006, D007, D008, D011
SE	D007, D008, D009, D039
SL	D005, D006, D007, D008, D011
SO	D004, D005, D006, D007, D008, D009, D010, D011
SP	D007
SS	D006, D008
SSD	D006, D007, D008
SSMD	D009 (D-listed chemicals only used from 06/94 to 08/94)
STF	D007
TDC	D005, D006, D007, D008, D011
VC	D006, D008
VP1, VP3	D009 (D-listed chemicals only used from 09/85 to 10/85)
VU, VUL	D005, D008
WM	D007, D008, D009, D022, D035, D040 (D-listings are not applicable after 1993)
X0, XO	D007, D008, D009, D022, D035, D040 **NOTE:** The same set of HWNs have been assigned to P/S codes WM, X0, and XO in order to be conservative, as discussed in *Acceptable Knowledge Summary Report for Miscellaneous Operations at TA-55* (TWCP-AK-2.1-004,R.2, Section ~~3.(.9).~~ 3.5.10).
XES	D004, D005, D006, D007, D008, D009, D010, D011
XP	D004, D005, D006, D007, D008, D009, D010, D011

9.0 VERIFICATION THAT IGNITABLE, REACTIVE, AND CORROSIVE WASTES WERE EXCLUDED

According to the WIPP WAP, "The prohibition of liquids and containerized gases prevents the shipment of corrosive, ignitable, or reactive wastes." The waste streams covered by this AK report have no listings for corrosivity, reactivity, or ignitability. Administrative controls on waste packaging were in place at various times to ensure the absence of such items from the waste stream.

stef

PTS	D005, D006, D007, D008, D011
PUB	D007, D008, D009
PX	D006, D008, D019
RASS/RSS	D004, D005, D006, D007, D008, D009, D010, D011, D019
RC	D005, D006, D007, D008, D011
RO	D006, D008, D040 - See Table 1
RR	D006, D007, D008, D009, D011
SA	D007, D009, D018, D038
SB	D005, D006, D007, D008, D011 - ~~See 7~~
SC	D005, D006, D007, D008, D011
SE	D007, D008, D009, D039
SL	D005, D006, D007, D008, D011
SO	D004, D005, D006, D007, D008, D009, D010, D011
SP	D007 - See Table 1
SS	D006, D008
SSD	D006, D007, D008
SSMD	D009 (D-listed chemicals only used from 06/94 to 08/94)
STF	D007
TDC	D005, D006, D007, D008, D011 - See Table 1
VC	D006, D008 - See Table 1
VP1, VP3	D009 (D-listed chemicals only used from 09/85 to 10/85)
VU, VUL	D005, D008
WM	D007, D008, D009, D022, D035, D040 (D-listings are not applicable after 1993)
X0, XO	D007, D008, D009, D022, D035, D040
	NOTE: The same set of HWNs have been assigned to P/S codes WM, X0, and XO in order to be conservative, as discussed in *Acceptable Knowledge Summary Report for Miscellaneous Operations at TA-55* (TWCP-AK-2.1-004,R.2, Section 3.4.9).
XES	D004, D005, D006, D007, D008, D009, D010, D011
XP	D004, D005, D006, D007, D008, D009, D010, D011

Why not add RA - see Table 1

see Table 1 - 2nd 19 - doesn't include D005 ?

ZD ?

9.0 VERIFICATION THAT IGNITABLE, REACTIVE, AND CORROSIVE WASTES WERE EXCLUDED

According to the WIPP WAP, "The prohibition of liquids and containerized gases prevents the shipment of corrosive, ignitable, or reactive wastes." The waste streams covered by this AK report have no listings for corrosivity, reactivity, or ignitability. Administrative controls on waste packaging were in place at various times to ensure the absence of such items from the waste stream.

- Liquids were prohibited from solid waste streams at TA-55 when the facility opened in January 1978. A waste management procedure written to cover operations at the new facility, *TA-55 Standard Operating Procedure (SOP) 406-GEN-R00*, stated that "Liquids are not permitted in any container of solid waste materials" (TWCP-3943).

- Chemical Waste Disposal Requests (see Attachment 5), introduced in June 1980, included check boxes ~~which~~ that the waste generator was required to check if the waste contained corrosive acids or bases, or pyrophoric, flammable, corrosive, explosive, toxic, carcinogenic or highly reactive materials.

- The Certification Plan (TWCP-697) and related Generator Attachments for TA-55 (TWCP-701) were implemented in 1987. Waste generators were required to sign a statement on the WODF (see Attachment 4, pp. 4 and 5) documenting that the waste contained "no free liquids, pyrophorics, explosives, compressed gases, powders or materials other than the indicated matrix." Checkboxes were also present for indicating the presence or absence of corrosive chemicals. Full implementation of this generator statement occurred in May 1987.

- Waste management inspectors perform visual ~~examination~~ verification of the waste prior to its initial packaging, thus allowing the inspectors to verify the generator's WODF statement (TWCP-701, Sections 3.8.5 to 3.8.6).

- In addition to the above-mentioned prohibitions on explosives in waste, explosives were altogether prohibited from TA-55 until installation of the Impact Test Facility in the early 1990s. In case of a misfire or unconsumed explosives, a procedure is in place at TA-55 to ensure that explosives do not enter the waste stream (TWCP-4720).

- The Waste Profile Request Form (WPRF), which has been in use at LANL since 1991, includes a statement which must be authenticated by the waste generator, that the waste is not ignitable (flash point >200°F), reactive, or corrosive.

- The TA-55 Generator Attachments to the Certification Plan were updated in 1995 (TWCP-700) but the prohibition on liquids in the waste, and the waste management inspection, remained in effect.

Hence, since the inception of operations at TA-55, corrosive wastes have been excluded from TA-55 solid wastes through the prohibition of liquids. Controls on reactive wastes are discussed in Section 3.6.3.

Controls have also been in place to ensure the exclusion of ignitable constituents. D001 does not apply to wastes in these waste streams despite the use of spent non-halogenated solvents (HWN F003), for the following reasons:

- Solutions containing spent non-halogenated solvents are sent to the RLWTF if they are below the DL for Pu.

- If above the DL, the solutions are sent to aqueous processes as part of chloride or nitrate operations. Aqueous recovery steps include dissolution of any solid Pu in hydrochloric or nitric acid, followed by Pu recovery by ion exchange. The solutions are then below the DL and are either sent to the RLWTF or to the evaporator.

- Rags that are above the DL for Pu are thermally decomposed, which destroys any organic component.

- Rags that are below the DL for Pu are discarded as combustible debris, but headspace gas analyses support the contention that the solvents are [not present in the waste at levels of concern] below regulatory limits (Section 14.4). diff. words?

- Finally, 100 percent of the drums are subjected to headspace gas analysis, and drums showing over 500 ppm total flammable VOCs are prohibited from being shipped to the WIPP. (This limit is quite conservative. For comparison, the explosive limit for acetone by itself is 25,000 ppm.)

The absence of these prohibited items is verified through radiography of each waste container and visual examination of selected containers during TWCP characterization activities. Any free liquids are absorbed onto vermiculite and discarded in an appropriate waste stream, and containerized gases that are found to be present are removed, or the container is tagged as non-compliant by filing a Prohibited Waste Report in accordance with *Nonconformance Reporting and Tracking* (TWCP-QP-1.1-007).

10.0 VERIFICATION THAT INCOMPATIBLE CHEMICALS WERE PROHIBITED

Controls are in place to ensure chemical compatibility for the waste contents and the TRUPACT-II shipping containers. Section 9.0 summarizes administrative controls in place at TA-55 that prohibit incompatible chemicals in the waste, and measures taken to verify their absence. In addition, all waste containers shipped from TA-55 to TA-54 for storage were evaluated for potentially incompatible chemicals in accordance with 49 CFR Subpart C—Segregation and separation chart of hazardous materials; Section 177.848, Segregation of hazardous materials, and were determined to be in compliance with this requirement.

For waste that has been generated after the implementation of the 1987 Certification Plan, Generator Attachments, waste generators signed a statement on the WODF for each waste items specifying that the waste contained "no free liquids, pyrophorics, explosives, compressed gases, powders or materials other than the indicated matrix." Prior to the installation of the Impact Test Facility in the early 1990s, explosives were prohibited from TA-55. In addition, waste management inspectors performed visual inspection of the waste prior to its initial packaging, thus allowing the inspectors to verify the generator's WODF statement.

A chemical compatibility analysis was performed for TRUCON codes 116/216 (combustible waste) which indicated that all chemicals and the waste matrix were

compatible at levels greater than trace amounts (*Content Code Assessments for LANL TRUCON Codes* [DOE/WIPP-89-004]). During the process AK search, additional chemicals were identified that necessitated a new compatibility analysis, which is underway at the present time.

11.0 VERIFICATION THAT THERE ARE NO COMPRESSED GASES, FREE LIQUIDS, NONRADIONUCLIDE PYROPHORICS, SEALED CONTAINERS GREATER THAN FOUR LITERS IN VOLUME, OR >1% RADIONUCLIDE PYROPHORICS

Most gases used at the TA-55 Plutonium Facility are stored outside the building and the gas is plumbed into the glovebox from outside the building (TWCP-4164). Occasionally, a lecture bottle may have been used for a process inside the building, but these bottles were kept outside of the glovebox with the gas plumbed into the glovebox. Consequently, compressed gas cylinders or containers are not expected to be in any of the TRU wastes generated by TA-55 operations.

Spray cans, especially WD-40, were in common use in TA-55 gloveboxes until May 1992 (TWCP-4166). These were routinely discarded as metal debris waste. From 1988 until May 1992, the protocol was to vent or puncture the spray cans inside the glovebox; venting was indicated by inserting a metal wire into the valve. After May 1992, spray cans were no longer used in gloveboxes.

Verification that individual waste drums do not contain compressed gases, free liquids, or sealed containers greater than 4 L in volume is obtained from radiography of each waste container and visual examination of selected containers during TWCP characterization activities. Any free liquids are absorbed, and any sealed containers greater than 4 L in volume, or unpunctured or unvented gas containers, are removed, or ~~else~~ the container is tagged as non-compliant by filing a Prohibited Waste Report in accordance with *Nonconformance Reporting and Tracking* (TWCP-QP-1.1-007).

comma

How do you? test procedures

Administrative and procedural controls on the prohibited pyrophorics in TRU waste and the absence of pyrophorics has been verified ~~through testing~~. For items of pyrochemical salt waste, the procedures of oxygen sparging and/or carbonate oxidation have been used since May 1987 to ensure that pyrophorics were oxidized. In addition, screening tests on similar pyrochemical salts and residues (which contain higher amounts of plutonium) at the RFETS (TWCP-2501) have shown (1) no autoignition, (2) no spontaneous combustion, and (3) no sparking. Experimental results on the reactivity of ~~LANL~~ direct oxide reduction (DOR) salt with water and the reactivity in air of heated calcium metal nodules from DOR salts indicate the absence of "dangerous when wet materials" and pyrophoricity in these salts (TWCP-3730, TWCP-3731, TWCP-3732).

Chemical Waste Disposal Requests dated as early as June 1980 included boxes that were required to be checked if the waste contained pyrophoric, flammable, corrosive, or explosive materials (see Attachment 5, Chemical Waste Disposal Request).

In addition, for wastes generated after the implementation of the 1987 Certification Plan, Generator Attachments, associated waste packaging procedures, and quality assurance systems, the waste generator has signed a statement on the WODF for each waste item stating that waste contains "no free liquids, pyrophorics, explosives, compressed gases, powders or materials other than the indicated matrix." The TA-55 Attachment to the Certification Plan describes how these restrictions were verified by waste management personnel (TWCP-701, Sections 3.8.5 through 3.8.7).

12.0 VERIFICATION THAT THERE ARE NO POLYCHLORINATED BIPHENYLS (PCBs) IN THE WASTE STREAM

No PCBs were introduced into TA-55 processes as documented in the TA-55 procedures reviewed during this AK search (TWCP-AK-2.1-002; TWCP-AK-2.1-003; TWCP-AK-2.1-004; TWCP-AK-2.1-005; TWCP-AK-2.1-006; and TWCP-AK-2.1-007) and summarized in the process inputs listed in Tables 1 and 6. Oils used in the reviewed processes include vacuum pump oils and cutting fluids used for cooling purposes; none of these oils are known to contain PCBs. All transformers known to contain PCBs have been tracked from the time of startup of TA-55 in 1978. Whenever any transformer oil is drained, it is handled by a subcontractor who is wholly responsible for its disposal (TWCP-AK-2.1-005, R.2, Section 9.0). This oil does not enter the LANL disposal operations.

why not on this AK? - is ok to ref OOS?

8

13.0 DETERMINATION OF THE MAXIMUM NUMBER OF CONFINEMENT LAYERS PERMITTED FOR WASTE PACKAGING

Waste streams TA-55-19 and TA-55-20 are primarily generated from operations performed in gloveboxes. The waste material is placed directly into bag-out bags (also called inner bags) through an opening in the glovebox where the bag is attached, and the bag is then closed and detached from the glovebox. Waste streams TA-55-19 and TA-55-20 may also be generated from "hot jobs" outside of the glovebox, such as valve changes, or from decontamination of spills or other releases. In these cases, the waste is placed directly into one (or possibly more) inner bags at the work area. The maximum number of confinement layers in any case is six (TWCP-816). This upper limit has been confirmed by RTR and VE data (Section 14).

A minor source of waste streams TA-55-19 and TA-55-20 is room trash that was originally considered low-level waste, which is collected in plastic bags inside cardboard boxes. Occasionally when assayed, these boxes are determined to be TRU waste. These boxes may be sorted to remove the "hot" item, or the whole box may be bagged and sent to the TRU packaging area for placement in drums containing waste streams TA-55-19 or TA-55-20, as appropriate. When this occurs, the P/S code WM is assigned to the waste. Due to the additional layers of plastic that are present when this operation occurs, drums with the P/S code WM are assumed to contain up to two more layers of internal packaging than other drums.

Waste drum packaging procedures for waste streams TA-55-19 and TA-55-20 have ~~gone through~~ been modified several ~~changes~~ times since the beginning of operations at TA-55. TRUCON Code assignments made by the waste generator are compiled in the Sampling Plan; However, ~~in the absence of this information~~ when TRUCON codes are absent, ~~TRUCON codes~~ they will be assigned to the waste container in accordance with the default packaging configurations and associated TRUCON codes shown in Table 7, that reflect the packaging protocols in effect during different periods of time at TA-55 (TWCP-816).

AK information has been compared with visual examination data for about 22 containers ~~so far~~ in waste streams TA-55-19 and TA-55-20, in accordance with *Reconciliation of Visual Examination and Radiography Information* (TWCP-QP-1.1-028). In two cases, the number of layers of packaging observed during visual examination was greater than the number of layers reported by the waste generator, and an incorrect TRUCON code was assigned by the waste generator (Section 14.2). It is possible that the extra plastic layers were breached (i.e., these were confining layers) but that the VE inspection did not ~~catch this detail~~ document this fact. However, the conservative conclusion is that these discrepancies indicate that TRUCON code assignments by the waste generator must be viewed with caution. Consequently, the most conservative TRUCON code ~~will be~~ is assigned to each waste container in waste streams TA-55-19 and TA-55-20, in accordance with the following guidance:

a) The default TRUCON codes from Table 7 ~~will be~~ are assigned if the waste generator has not assigned a TRUCON code.

b) The TRUCON code assigned by the waste generator ~~will be~~ is used only if it has been positively confirmed by RTR or VE data.

c) If no VE data are available, and if the RTR data are indeterminate, then the default TRUCON code ~~will be~~ is assigned to the container.

This guidance only applies to retrievably stored waste. It is assumed that newly generated waste packaged under procedures approved by TWCP and CBFO ~~will be~~ are assigned correct TRUCON codes.

14.0 CONFIRMATION OF AK INFORMATION FOR THE WASTE STREAM

Characterization data acquired by WAP-compliant activities provide a means to ~~judge the reliability of~~ confirm AK information. Radiography, radioassay, and headspace gas analysis are conducted on all retrievably stored containers of debris waste, and VE is being conducted on at least 50 containers from waste streams TA-55-19 and TA-55-20. Relevant aspects of the data produced by these activities are summarized in the sections below, focusing on the extent to which the data confirm AK information. ~~and identifying aspects for which additional AK documentation or research may be warranted.~~

?

Table 7. Maximum Layers of Confinement to ~~B~~e Used for TA-55-19 and TA-55-20 Waste Containers in the Absence of More Specific Waste Characterization Data

Time Frame	P/S Code	Layers of Confinement ~~(see Note 1)~~	TRUCON Code
01/78–05/87	All	Maximum of 6 layers: • up to 4 inner bags • up to 2 liner bags • all bag closures by either twist & tie; or twist, tie & tape	LA 116 I
05/87–12/97 ~~(see Note 2)~~	All except WM, XO, X0	Maximum of 4 layers: • up to 2 inner bags • 2 liner bags • bag closures by either twist & tie; twist, tie & tape, folded and taped, or folded **NOTE:** Folded and taped bags and folded bags do not constitute layers of confinement	LA 116 A
05/87–present	WM, XO, X0	Maximum of 6 layers: • up to 4 inner bags • 2 liner bags • bag closures by either twist & tie; twist, tie & tape, folded and taped, or folded **NOTE:** Folded and taped bags and folded bags do not constitute layers of confinement	LA 116 I
01/98–present	All except WM, XO, X0	Maximum of 1 layer: • 1 carbon-filter vented inner bag (if initial bag is breached, bag is placed in second bag and first bag is slit open), closed by either twist & tie; or twist, tie & tape • 2 liner bags, folded, no closure	LA 116 E

~~Note 1:~~ Layers of confinement for these TRUCON Codes are defined in DOE/WIPP-89-004.

~~Note 2:~~ In Rev 1 of this AK report, LA116A was applicable from 5/87 until 1/97. Its applicability was extended to the end of 1997 in Rev 2 (the current revision) because of inconsistencies found during reconciliation of VE data (Section 14.2).

Consistency

14.1 Radiography Data

Radiography data are examined to confirm AK information about WMC assignments, layers of packaging, absence of prohibited items, and ~~the~~ relative volumes or weights of waste matrix parameters for a waste stream. The WMC for waste streams TA-55-19 and TA-55-20 is S5300 (combustible debris). Thus far, 265 containers, or about 6 percent of the 4454 containers in these two waste streams (Sampling Plan, Revision 3), have undergone RTR, with the data contained in WIPP-compliant batch data reports. The following observations are made from an examination of these data, as summarized in Table 8 and 9:

- confirmation of WMC S5300 for 98.9 percent of the drums examined
- identification of WMC discrepancies for 3 containers (1.1 percent of the drums examined), which must be reassigned to other waste streams
- identification of potentially sealed containers > 4 liters in 13 percent of the drums, for which PWRs were submitted
- confirmation of the absence of any other prohibited item or condition requiring a PWR
- confirmation of 4 or fewer packaging layers for 52 percent of the drums; Plastic packaging layers for the remaining 48 percent were indeterminate due to the large number of horsetails present in the drums .
- confirmation of the waste stream description
- 97 percent of the drums contain more than 75 ~~wt percent~~ wt.% combustible waste
- 86 percent of the drums contain less than 5 ~~wt percent~~ wt.% metal waste, and 94 percent contain less than 10 ~~wt percent~~ wt.% metal waste.

  Note: TA-55 waste generators followed guidance that metal cans used to contain debris were to be considered as packaging, and not as waste. This may account for the drums of combustible debris that were estimated by RTR to contain more than the expected 5 wt.% ~~percent~~ metal waste.

Changes in waste stream assignment because of characterization data are documented in accordance with *Waste Characterization Data Reconciliation with Acceptable Knowledge* (TWCP-DTP-~~2.1~~ 1.2-064).

AK information resolved an apparent WMC discrepancy for several drums in waste stream TA-55-19 which contained material identified as metal by the RTR operator, thereby leading to an apparent WMC of S5110 (for metal debris)

? or chart in ToC

Table 8. RTR ~~Waste~~ Data for Waste Streams TA-55-19 and TA-55-20

Evaluated ~~Waste~~ characteristic	Number of drums			
WIPP-compliant RTR data				
• TA-55-19	245	out of	4173	6% of waste stream
• TA-55-20	20	out of	281	7% of waste stream
WMC discrepancies				
• TA-55-19	3	out of	245	1% of drums examined
• TA-55-20	0	out of	20	0% of drums examined
Excluding drums with confirmed WMC discrepancy				
Free liquids (no PWR required; all <1" of container or <1% of drum)	34	out of	262	13 % of drums examined
Sealed containers > 4L (PWR required)	31	out of	262	13 % of drums examined
Pressurized containers	0	out of	262	0 % of drums examined
Unpunctured liner	0	out of	262	0 % of drums examined
Other prohibited items	0	out of	262	0 % of drums examined
Excluding drums with PWRs				
Proportion of combustible waste in drum (~~weight %~~ wt. %)				
• Less than 25%	0	out of	231	0 % of drums examined
• 25 to 50%	1	out of	231	< 1 % of drums examined
• 50 to 75%	7	out of	231	3 % of drums examined
• More than 75%	223	out of	231	97 % of drums examined

Data sources: RTR batch data reports TWCP-4019, 4020, 4021, 4080, 4219, 4399, 4400, 4457, 4458, 4459, 4464, 4471, 4542, 4543, 4544, 4545, 4566, 4570, 4572, 4573, 4574, 4577, 4721, 4797, 4835, 5110, 5121, 5147; RTR batch data report ~~still~~ in Project-level review: LA01-RTR-006.

why include a BDR that's not complete?

Table 9. RTR Packaging Data for Waste Streams TA-55-19 and TA-55-20

ctr over all 4 colums as in Table 8

Maximum Number of Layers	Metal Layers	Plastic Layers	No. of Drums	~~% of Total Examined~~	
Less than or equal to 1	0	1	2	out of 231	1% of drums
Less than or equal to 2	0	2	21	out of 231	9% of drums
Less than or equal to 3	0	3	95	out of 231	41% of drums
Less than or equal to 4	1	3	2	out of 231	1% of drums
Less than or equal to 5	None observed		0	out of 231	0% of drums
Less than or equal to 6	None observed		0	out of 231	0% of drums
Total Number of Layers	0	Indeter	109		
Indeterminant due to number of plastic horsetails:	1	Indeter	2		
	Subtotal		111	out of 231	48% of drums

Data sources: RTR batch data reports TWCP-4019, 4020, 4021, 4080, 4219, 4399, 4400, 4457, 4458, 4459, 4464, 4471, 4542, 4543, 4544, 4545, 4566, 4570, 4572, 4573, 4574, 4577, 4721, 4797, 4835, 5110, 5121, 5147; RTR batch data report ~~still~~ in Project-level review: LA01-RTR-006.

why include BDR not complete?

(TWCP-3288, 3289, 3290, 3291, 4190). After reviewing with the generator how these drums were packaged, the generator determined that these drums were packaged with very dense in-house fabricated plastic material called polyvinyldienefluoride (PVDF, also known as Kynar) used to line gloveboxes and build equipment in chloride operations starting in about 1988 (TWCP-5157). Hence, the WMC S5300 was correct. As a result of this AK information, a sample of Kynar was added to one of the test drums used in the RTR operations.

14.2 Visual Examination Data

VE data are used to confirm AK information on waste stream descriptions, WMC, the absence of prohibited items, the number and type of confining layers, and the relative volumes and weights of waste matrix parameters. AK packaging and WMC information have been evaluated by VE for about 22 containers so far in waste streams TA-55-19 and TA-55-20, in accordance with *Reconciliation of Visual Examination and Radiography Information* (TWCP-QP-1.1-028). These 22 drums were packaged between 11/85 and 8/97 (Sampling Plan). P/S codes are available for the waste items packaged in these drums, as documented in radioassay batch data reports (TWCP-4024, TWCP-4025, TWCP-4052, TWCP-4158, TWCP-4303) and waste generator records (TWCP-5086). (The codes for these drums are listed in Table 11, which is discussed in Section 14.3). VE results are summarized in Table 10, from which the following observations are made:

- VE confirmed the AK WMC for all of these drums, reporting WMC S5300 (Organic Debris) for 8 drums, and S5310 (Plastic/Rubber Debris) for 14 drums.

- The maximum number of confining layers observed by VE was five (for one drum), consistent with AK information indicating that the number of layers is six or less (TWCP-816; also Table 7 of this report).

  NOTE: RTR data for the number of plastic layers in this particular drum were indeterminate.

- No closed liners were found by VE, which confirmed AK and RTR information.

- For 5 drums, the number of ~~confining~~ confinement layers observed during VE (2 to 4) was greater than the number of layers associated with the TRUCON code assigned for these drums by the waste generator (LA116C, 1 layer).

- For 4 of the above drums, the default AK value (LA116E, 1 layer) would also have been less conservative than the VE findings. All 4 had been packaged after January 1997 such that no more than 1 layer was expected (Table 7).

Table 10. VE Data for Waste Streams TA-55-19 and TA-55-20

Characterization data	Number of containers				Comments
	AK ~~(see Note 1)~~		RTR	VE	
Waste Matrix Code					
S5000	—		—	—	Positive confirmation of AK WMC by RTR and VE for ~~all~~ 22 drums
S5300	22		22	8	
S5310 ~~#~~ number	—		—	14	
Maximum # of layers and associated TRUCON codes	Default ~~(Note 1)~~	Assigned in SP	~~See Note 2~~ b		Number of confining layers • AK and VE match for 3 drums • AK more conservative than VE for 14 drums • AK from waste generator was less conservative than VE for 5 drums
0 LA116G	—	—		—	
1 LA116C, E, F	—	6		2	
2 LA116B, D	—	—		2	
3 None	—	—		9	
4 LA116A	4	4		8	
5 LA116H	—	—		1	
6 LA116I	8	—		—	

SP—Sampling Plan (Rev 3)

~~Notes:~~

~~1.~~ a AK information for WMC and TRUCON code assignments is from the Sampling Plan, Rev 3. If no TRUCON code was assigned, then the default code was determined from Table 6 in TWCP-AK-2.1-008 (Rev 1), using AK information on packaging dates and P/S codes as documented in the Sampling Plan.

~~2.~~ b RTR data indicated no metal packaging layers for any of these drums, which was consistent with AK information and confirmed by VE. The number of plastic packaging layers was indeterminate by RTR except for one drum with three layers, which was consistent with the default TRUCON code and confirmed by VE (TWCP-4393).

Data sources: VE batch data reports TWCP-3947, 3948, 3949, 3950, 3951, 4022, 4326, 4327, 4392, 4393, 4394, 4427, 4800, 5077, 5083, 5084, 5085, 5112, 5115, 5120, 5173; VE batch data report ~~still~~ in Project-level review: LA00-3.4.1-005.

? why not nonapplicable BOR ?

Table 11. Radioassay Data for Waste Streams TA-55-19 and TA-55-20

Radionuclide Characteristics	Number of drums	Comments
Pu isotopic fractions		Dominant isotope is Pu239 in all drums
• Pu238 / total Pu	22	0.010 to 0.069 wt.%
• Pu239 / total Pu	22	91.1 to 94.1 wt.%
• Pu240 / total Pu	22	5.7 to 8.5 wt.%
• Pu241 / total Pu	22	0.14 to 0.32 wt.%
• Pu242 / total Pu	22	0.009 to 0.055 wt.%
Material type		
• MT52	19	
• MT53	2	
• MT52/53 mix	1	
Total Pu mass, expressed as ratio of AK data to NDA data		AK data from Sampling Plan (Rev 3) AK/NDA ratios range from 0.6 to 1.4
• AK/NDA < 0.7	1	
• 0.7 < AK/NDA < 1.3	17	
• AK/NDA > 1.3	4	
Other actinides present at detectable levels (uncertainties ≤ 21.5%)*		*Range of ratios of nuclide to total Pu* Measured ratios / Calculated upper bound (Table 2)
• Am241	22	1×10^{-3} to 9×10^{-3} / 2×10^{-3} to 3×10^{-3}
• Am243	22	4×10^{-7} to 4×10^{-6} / Not applicable
• Np237	22	2×10^{-4} to 1×10^{-2} / Not applicable
• U234	21	7×10^{-3} to 6×10^{-2} / 2×10^{-5} to 2×10^{-5}
• U235	5	3×10^{-3} to 5×10^{-2} / 9×10^{-4} to 1×10^{-3}
• U238	0	No measurable U238 / Not applicable
Other radionuclides present at detectable levels (uncertainties ≤ 21.5%)*		~~Note~~ Th232 is not detectable by the methods used
• Cs137		
• Pa231(uncertainty <21.5%)	16	
• No other detectable nuclides	9	
	2	
Ratio of measured ratio (Am241/Total Pu) to calculated upper bound (0.002, Table 2)		
• Ratio < 1	2	Am241 could be from decay of Pu241
• 1 < ratio < 2	7	Process waste probably enriched in Am241
• 2 < ratio < 3	7	Process waste enriched in Am241
• Ratio > 3	6	Process waste enriched in Am241
P/S codes for waste items present in these drums (TWCP-5086). The number of drums containing waste items from each code is given in parentheses, if more than one.		
• Chloride operations	CSE, CW, CX (3), CXL (7), MB, MS	
• Metal operations	CA (2), FF, MA, MW, PH, SRL	
• Miscellaneous operations	AD (2), CV, IB (5), ME, WM (3), XP	
• Nitrate operations	ATL, BM (4), COD, DS (3), ED (7), EV (4), HCD, LR (4), MAG, NC (6), NL (2), OD, PR (2), RBJ, RR (2), SC (8), SP (4), SSD	
• Pyrochemical operations	ER (3), MO, OR (3), SS (3)	
• Special processing	None	

NDA—nondestructive assay

Data sources: Radioassay batch data reports TWCP-4009, 4023, 4024, 4025, 4052, 4078, 4158, 4159, 4212, 4225, 4226, 4303; and Sampling Plan (Rev 3). P/S codes from TWCP-5086 and TWCP-5163.

*The rationale for this MDL cut off (21.5% uncertainty) is given in TWCP-2130.

NOTE: As a result of this discrepancy in packaging layers, Table 7 was revised to extend the period of applicability of LA116A (4 layers of packaging) to the end of 1997.

A conservative conclusion is that these discrepancies indicate that TRUCON code assignments by the waste generator must be viewed with caution, at least with respect to waste containers packaged in 1997 when TA-55 personnel were transitioning from one packaging procedure to another.

14.3 Radioassay Data

Radioassay data are examined to confirm AK information on plutonium material type and mass, verify the presence of other radionuclides contributing to the total drum activity, and to provide evidence for fractionation of other actinides (e.g., uranium, americium) relative to plutonium during material processing. Table 11 summarizes information relevant to these evaluations for the 22 drums from TA-55-19 and TA-55-20 that have undergone VE. These data confirm the following AK information:

Be consistent on bullets - initial caps

- the dominant isotope in all drums is Pu239
- the material type is MT52 or MT53 for all drums
- all these drums qualify as TRU waste
- AK information on total mass of Pu in each drum is within 30 percent of the TWCP assay value for 17 drums (77 percent). AK mass for the remaining five drums (23 percent) is within 40 percent of the TWCP assay value.
- As indicated by AK information, all drums contain low but detectable quantities of Am-241, Am-243, and Np-237. A significant proportion also contains Cs-137 and Pa-231.
- No U-236 or U-238 was detected, confirming AK information that uranium is not expected to be present in process waste generated under the P/S codes listed as the source of waste in these drums
- U-235 is present only at trace levels in 5 drums
- In 20 drums (91 percent), Am-241 and U-234 are enriched beyond what would be predicted if they were present solely due to the decay of their precursors in the source Pu, indicating that significant fractionation of Am and U from Pu occurs during processing operations

14.4 Headspace Gas Data

Headspace gas data are examined to confirm AK information about the presence or absence of hazardous constituents in a given waste stream, and the assignment of each drum to the appropriate mixed or nonmixed waste stream. Table 12 summarizes VOC target analyte concentrations for headspace gas samples from 55 containers assigned to waste stream TA-55-19. (No approved data are yet available for drums from waste stream TA-55-20.) These data confirm the AK information:

- Altogether, 13 different VOCs were detected in these drums. All are documented as having been present or used in TA-55 processes contributing to waste stream TA-55-19, and HWNs have already been assigned to this waste stream for these constituents.
- Only one VOC, methylene chloride, had a 90% Upper Concentration Limit (UCL_{90}) value that was above its program required quantitation limit (PRQL).
- Four VOCs—acetone, 1,1,2-trichloro-1,2,2-trifluoroethane, methyl ethyl ketone, and toluene—had UCL_{90} values below the PRQL but were present in at least one drum at a concentration above the PRQL.
- One VOC (methanol) had a mean concentration above its Method Detection Limit (MDL) but no concentrations above the PRQL.
- Seven VOCs had mean concentrations below their MDL, but were present in at least one drum at a concentration above the MDL.
- All other target analyte VOCs were below the MDL.
- No Tentatively Identified Compounds (TICs) were detected.

These results are consistent with AK information summarized in this waste stream report, insofar as all of the VOCs that were detected are known to have been present in TA-55 operations. The data confirm that assignment of these HWNs based on AK information is conservative.

whose WAC ?

Table 13 summarizes concentrations of potentially flammable VOCs, hydrogen, and methane for headspace gas samples from the same 55 containers as are included in Table 12. All were below the WAC limits. The average concentration of potentially flammable VOCs for this set of 55 drums was 128 ±101 ppm ppmv, with a maximum of 473 ppm (TWCP-4722). No methane was detected in any of the drums, and hydrogen concentrations were lower by more than an order of magnitude than the WAC limit of 5 percent. ?

WIPP

14.4 Headspace Gas Data

Headspace gas data are examined to confirm AK information about the presence or absence of hazardous constituents in a given waste stream, and the assignment of each drum to the appropriate mixed or nonmixed waste stream. Table 12 summarizes VOC target analyte concentrations for headspace gas samples from 55 containers assigned to waste stream TA-55-19. (No approved data are yet available for drums from waste stream TA-55-20.) These data confirm the AK information:

- Altogether, 13 different VOCs were detected in these drums. All are documented as having been present or used in TA-55 processes contributing to waste stream TA-55-19, and HWNs have already been assigned to this waste stream for these constituents.
- Only one VOC, methylene chloride, had a 90% Upper Concentration Limit (UCL_{90}) value that was above its program required quantitation limit (PRQL).
- Four VOCs—acetone, 1,1,2-trichloro-1,2,2-trifluoroethane, methyl ethyl ketone, and toluene—had UCL_{90} values below the PRQL but were present in at least one drum at a concentration above the PRQL.
- One VOC (methanol) had a mean concentration above its Method Detection Limit (MDL) but no concentrations above the PRQL.
- Seven VOCs had mean concentrations below their MDL, but were present in at least one drum at a concentration above the MDL.
- All other target analyte VOCs were below the MDL.
- No Tentatively Identified Compounds (TICs) were detected.
- No tetrahydrofuran ~~was~~ has been detected in any drum containing waste from TA-55.

These results are consistent with AK information summarized in this waste stream report, insofar as all of the VOCs that were detected are known to have been present in TA-55 operations. The data confirm that assignment of these HWNs based on AK information is conservative.

Table 13 summarizes concentrations of potentially flammable VOCs, hydrogen, and methane for headspace gas samples from the same 55 containers as are included in Table 12. All were below the WAC limits. The average concentration of potentially flammable VOCs for this set of 55 drums was 128 ±101 ppm ppmv, with a maximum of 473 ppm (TWCP-4722). No methane was detected in any of the drums, and hydrogen concentrations were lower by more than an order of magnitude than the WAC limit of 5 percent.

Table 12. Headspace Gas Data for Target Analytes in Waste Stream TA-55-19

ANALYTE	MDL (ppmv)	PRQL (ppmv)	No. of Samples Analyzed	No. of Samples above MDL	No. of Samples above PRQL	VOC concentrations, in (ppmv)			EPA HWN
						Mean	UCL_{90}*	Maximum	AssignedAK
Benzene	1.96	10	55	4	0	1.2	1.8	5	F005, D018
Bromoform	2.27	10	55	0	0	1.1	1.1	—	—
Carbon Tetrachloride	2.00	10	55	1	0	1.0	1.0	3	D019
Chlorobenzene	1.93	10	55	1	0	1.0	1.0	2	F002, D021
Chloroform	1.85	10	55	4	0	1.0	1.4	3	D022
1,1-Dichloroethane	1.78	10	55	2	0	1.0	1.9	4	—
1,2-Dichloroethane	2.40	10	55	0	0	1.2	1.2	—	—
1,1-Dichloroethene	2.74	10	55	0	0	1.4	1.4	—	—
Cis-1,2-Dichloroethylene	2.06	10	55	0	0	1.0	1.0	—	—
Ethyl Benzene	1.72	10	55	0	0	0.9	0.9	—	F003
Ethyl Ether	1.30	10	55	0	0	0.65	0.65	—	F003
Methylene Chloride	1.97	10	55	11	8	8.7	18.1	100	F002
1,1,2,2-Tetrachloroethane	1.62	10	55	0	0	0.8	0.8	—	—
Tetrachloroethene	1.44	10	55	0	0	0.7	0.7	—	F002, D039
Toluene	1.67	10	55	33	11	6.5	8.5	51	F005
1,1,2-Trichloro 1,2,2-trifluoroethane (Freon-113)	1.79	10	55	1	1	1.7	1.7	44	F002
1,1,1-Trichloroethane	1.82	10	55	1	0	1.0	1.0	4	—
Trichloroethene	1.31	10	55	0	0	0.7	0.7	6.0	F002, D040
m-Xylene and p-xylene	3.62	10	55	0	0	1.8	1.8	—	F003
o-Xylene	1.90	10	55	0	0	0.95	0.95	—	F003
Acetone	16.12	100	55	31	13	69.7	91.2	410	F003
Butanol	8.78	100	55	1	0	4.8	4.8	29	—
Methanol	11.42	100	55	10	0	14.6	24.3	84	F003
Methyl ethyl ketone	18.42	100	55	4	0	10.1	12.6	23	F005, D035
Methyl isobutyl ketone	16.05	100	55	0	0	8.0	8.0	—	—

Source: TWCP-4722; VOC target analyte list for debris waste from WIPP WAP, Table B3-2.

ppmv, part per million by volume; MDL, Method Detection Limit; PRQL, Program Required Quantitation Limit; UCL90, 90% Upper Concentration Limit

— Not applicable

* For samples with concentrations below the MDL, UCL_{90} concentrations are calculated by assuming concentrations were ~~half~~ one-half of the MDL values as determined in the MDL study dated 6/19/00 (TWCP-3248).

Has another one been done? - Aren't they only good for 6 months?

Table 13. Headspace Gas Data For Flammable VOCs, Hydrogen, and Methane in Waste Stream TA-55-19

ANALYTE	Lower Explosive Limit (LEL)	No. of Samples Analyzed	No. of Samples Above MDL	Maximum Measured Concentration (ppmv)	Evidence for Presence of Gas in Waste	
					Gas Data	AK
Acetone	2.5%	55	31	410	X	X
Benzene	1.2%	55	4	5	X	X
Butanol	1.4%	55	1	29	X	X
Chlorobenzene	1.3%	55	1	2	X	X
Cyclohexane	1.3%	55	0	—	—	—
1,1-Dichloroethane	5.4%	55	2	4	X	—
1,2-Dichloroethane	6.2%	55	0	—	—	—
1,1-Dichloroethene	6.5%	55	0	—	—	X
Cis-1,2-Dichloroethylene	5.6%	55	0	—	—	—
Ethyl Benzene	0.8%	55	0	—	—	X
Ethyl Ether	1.9%	55	0	—	—	X
Methanol	6.0%	55	10	84	X	X
Methyl ethyl ketone	1.4% at 200 °F	55	4	23	X	X
Methyl isobutyl ketone	1.2% at 200 °F	55	0	—	—	—
Toluene	1.1%	55	33	51	X	X
1,3,5-Trimethylbenzene	Not known	55	0	—	—	—
1,2,4-Trimethylbenzene	0.9%	55	0	—	—	—
m-Xylene and p-xylene	1.1%	55	0	—	—	X
o-Xylene	0.9%	55	0	—	—	X
Total potentially flammable VOCs in a single container*	—	55	—	473	X	X
Hydrogen*	4%	55	32	0.38%	X	X
Methane*	5.3%	55	0	—	—	X

Source: TWCP-4722

ppmv, part per million by volume; MDL, Method Detection Limit

LEL, Lower explosive (flammable) limit in air, % by volume (at room temperature); data from NIOSH Pocket Guide to Chemical Hazards (NIOSH, 1997)

— Not applicable or not detected

* WIPP WAC requirements state that a waste container cannot be shipped if its headspace gas concentration exceeds 500 ppm for total flammable VOCs, 5% for hydrogen, or 500 ppm for methane concentration.

** The average flammable VOC concentration is 128 ±101 ppm (TWCP-4722). Gases that were below detection are taken into account in this calculation by assuming they are present at concentrations that are equal to ~~half~~ one-half of the MDL values.

Headspace

Constituent

Table 13. Headspace Gas Data For Flammable VOCs, Hydrogen, and Methane in Waste Stream TA-55-19

ANALYTE	Lower Explosive Limit (LEL)	No. of Samples Analyzed	No. of Samples Above MDL	Maximum Measured Concentration (ppmv)	Evidence for Presence of VOC ~~Gas~~ in Waste	
					Gas Data	AK
Acetone	2.5%	55	31	410	X	X
Benzene	1.2%	55	4	5	X	X
Butanol	1.4%	55	1	29	X	X
Chlorobenzene	1.3%	55	1	2	X	X
Cyclohexane	1.3%	55	0	—	—	—
1,1-Dichloroethane	5.4%	55	2	4	X	—
1,2-Dichloroethane	6.2%	55	0	—	—	—
1,1-Dichloroethene	6.5%	55	0	—	—	X
Cis-1,2-Dichloroethylene	5.6%	55	0	—	—	—
Ethyl Benzene	0.8%	55	0	—	—	X
Ethyl Ether	1.9%	55	0	—	—	X
Methanol	6.0%	55	10	84	X	X
Methyl ethyl ketone	1.4% at 200 °F	55	4	23	X	X
Methyl isobutyl ketone	1.2% at 200 °F	55	0	—	—	—
Toluene	1.1%	55	33	51	X	X
1,3,5-Trimethylbenzene	Not known	55	0	—	—	—
1,2,4-Trimethylbenzene	0.9%	55	0	—	—	—
m-Xylene and p-xylene	1.1%	55	0	—	—	X
o-Xylene	0.9%	55	0	—	—	X
Total potentially flammable VOCs in a single container*	—	**55**	—	**473**	**X**	**X**
Hydrogen*	4%	55	32	0.38%	X	X
Methane*	5.3%	55	0	—	—	X

Source: TWCP-4722

ppmv, part per million by volume; MDL, Method Detection Limit

LEL, Lower explosive (flammable) limit in air, % by volume (at room temperature); data from NIOSH Pocket Guide to Chemical Hazards (NIOSH, 1997)

— Not applicable or not detected

* WAC requirements state that a waste container cannot be shipped if its headspace gas concentration exceeds 500 ppm for total flammable VOCs, 5% for hydrogen, or 500 ppm for methane concentration.

** The average flammable VOC concentration is 128 ±101 ppm (TWCP-4722). Gases that were below detection are taken into account in this calculation by assuming they are present at concentrations that are equal to half of the MDL values.

I need to revise this ¶ slightly and add a reference

In conclusion, the headspace gas data confirm the presence of VOCs in waste stream TA-55-19. ~~No~~ All VOCs ~~were~~ present ~~which~~ were ~~not~~ expected based on AK. However, no correlation is seen between the presence and absence of a specific VOC and its documented use in a process known to have contributed waste placed in a particular drum. For example, about 60 percent of the containers show measurable concentrations of acetone and/or toluene in the headspace gas, and 20 percent contain methylene chloride, but less than half of the drums in which these chemicals are present contain waste items generated by activities that were known to have used these chemicals. The most plausible explanation is that acetone, toluene, and methylene chloride are present as solvents used in the manufacturing of plastics. Radiolytic degradation of the plastic polymers may also be a contributing factor.

?

This seems like a bombshell!

Add References

15.0 CITED PROCEDURES AND REQUIREMENTS DOCUMENTS

- 40 CFR Part 261—Identification and Listing of Hazardous Wastes
- 49 CFR Subpart C—Segregation and separation chart of hazardous materials. Section 177.848, Segregation of hazardous materials
- *Acceptable Knowledge Documentation* (TWCP-QP-1.1-021)
- *Hazardous Waste Facility Permit Issued to the Waste Isolation Pilot Plant* (EPA No. NM4890139088) (Attachment B, Waste Analysis Plan)
- *NIOSH Pocket Guide to Chemical Hazards* (1997). National Institute for Occupational Safety and Health (NIOSH) Publication #97-140.
- *Nonconformance Reporting and Tracking* (TWCP-QP-1.1-007)
- *Reconciliation of Visual Examination and Radiography Information* (TWCP-QP-1.1-028).
- *Transuranic Package Transporter (TRUPACT)-II Content Codes* (DOE/WIPP-89-004)
- *Waste Analysis at Facilities that Generate, Treat, Store and Dispose of Hazardous Waste* (EPA)
- *Waste Characterization Data Reconciliation with Acceptable Knowledge* (TWCP-DTP-1.2-064)

full citations?

Jim: your call.

Insert TWCP-351 & 352 here, from p. 3 of Att 1

ACCEPTABLE KNOWLEDGE ROADMAP

Waste Streams: TA-55-19 and TA-55-20.

Documents are in the TWCP RMDC Center.

TWCP Record No.	Information Category Code	Information	Source	Summary	Limitations
TWCP-697	C	Waste was controlled to meet WIPP WAC requirements as early as 1983.	Los Alamos Certification Plan, 1983	Waste was controlled to meet WIPP WAC requirements as early as 1983. Generator Attachments were used to describe and reference specific generator procedures.	Overview document – Generator Attachments provide more detailed information.
TWCP-698	B	Gives Material Type compositions	NMT Memo, NMT-7 WM/EC-96-032 Benchmark Environmental Corp. Memo, AL-7193 BEC	Gives Material Type compositions	Does not give information on how material may fractionate in TA-55 waste processes.
TWCP-700	C	*Generator Attachment* to the *Certification Plan*	*TA-55 Attachment, 1955,* TRUWM-TA55-CPA-03, R00	Documents controls to meet WIPP WAC were implemented and how independent verification was accomplished.	Information is not extremely detailed.
TWCP-701	C	*Generator Attachment* to the *Certification Plan*	*TA-55 Attachment, 1987,* TRU-MST12-CPA-03,R00	Documents controls to meet WIPP WAC were implemented and how independent verification was accomplished.	Information is not extremely detailed.
TWCP-816	D	Jim Foxx Interview on Number of Layers of Packaging	C.L. Foxx, Los Alamos National Laboratory	Provides an explanation of why some waste containers may be packaged with 6 layers of confinement	No Direct way to differentiate between and 6 layers of packaging
TWCP-882 (UCNI)	D	Secondary Radionuclides and Toxic Metals in TA-55 TRU Waste	Memo from Jim Foxx	Lists additional radionuclides and metals potentially in waste, subdivided by P/S code. Covers time period from 1978 to present.	Best information available, but it is based on worker recollection because other records are not available.

* Information Category Codes: A = forms intended for use in waste certification, B = data from controlled databases and published documents, C = unpublished data, and D = interviews, memos, and letters

Heady on all

TWCP Record No.	Information Category Code	Information	Source	Summary	Limitations
TWCP-886	C	Color Flow Diagram of Pu-processes at TA-55.	Diagram from Jim Foxx	Indicates that process inputs are thermally treated and that heavy metals from process inputs end up in the nitric acid evaporator bottoms.	Does not indicate solvent input to processes.
TWCP-887	D	Co-mingling of Defense and Non-Defense TRU Waste	Memo from Jim Foxx	Wastes generated from defense and non-defense activities were not segregated at TA-55 through 1997	None
TWCP-2130	D	Estimate of the minimum detection limit for Am-243, Np-237, Pa-231, and Th-232 for FRAM analyses	Criteria for reporting Am-243, Np-237, Pa-231, and Th-232 on mobile PAN radioassay data sheets	If the error in the peak area for the isotopes Am-243, Np-237, Pa-231, and Th-232 is greater than 21.5% in the FRAM report, then that isotope is considered to be below the minimum detectable activity.	Memo refers specifically to PAN radioassay data, but the same reasoning is applied to TGS and HENC assay data as well, and to all radionuclides detectable by FRAM.
TWCP-2501	B	"Backlog Waste Reassessment Baseline Book, Waste Form 34"	Rocky Flats Environmental Technology Site Report 1995	Page WF34-10 contains results of tests for corrosivity	Tests are on residues rather than waste that is lower in Pu content; hence, they are conservative.
TWCP-3248	C	Method Detection Limits for Headspace Gas Analyses	MDL studies with data	MDL values for VOCs, determined 06/19/00	Different MDL values would have been in effect at the times that the data included in Table 12 of this AK report were acquired, so the MDL values should only be considered as an approximate guide.

* Information Category Codes: A = forms intended for use in waste certification, B = data from controlled databases and published documents, C = unpublished data, and D = interviews, memos, and letters

SIMPLIFIED PROCESS FLOW DIAGRAMS

SIMPLIFIED PROCESS FLOW DIAGRAM FOR CHLORIDE OPERATIONS

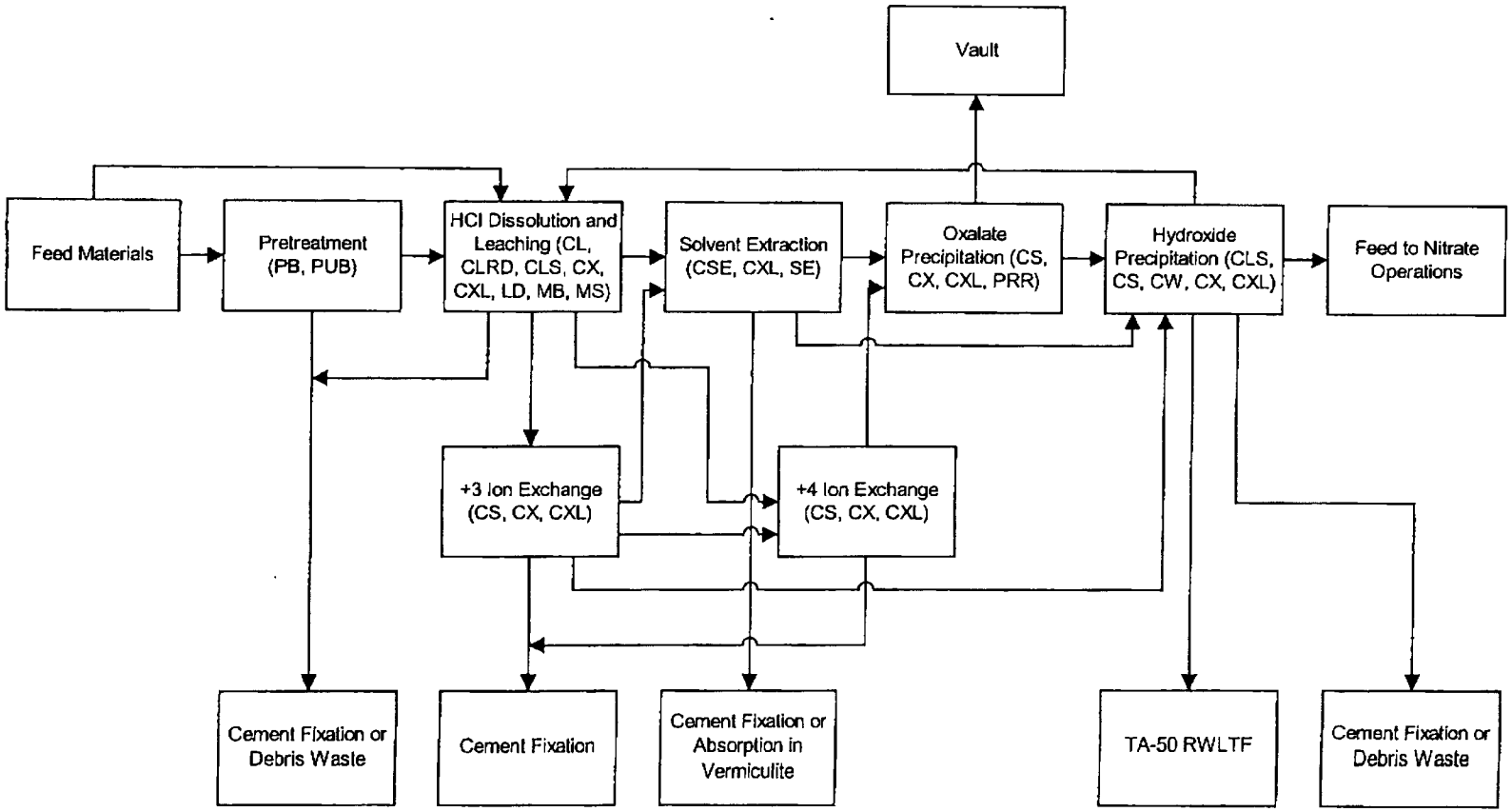

NOTE: Many of the P/S codes for chloride operations involve more than one step or activity in the process flow diagram. Thus, the same P/S code can appear in more than one box on the process flow diagram.

Edit Round #4

TA-55 PLUTONIUM FACILITY
ACCEPTABLE KNOWLEDGE REPORT

REPORT TITLE: Acceptable Knowledge Summary Report for Waste Streams TA-55-19 and TA-55-20

REPORT NUMBER: TWCP-AK-2.1-008,R.2 (LA-UR-00-5727)

WASTE GENERATED FROM WASTE STREAMS: TA-55-19, TA-55-19A, and TA-55-20

EFFECTIVE DATE: _____

NEXT REVIEW DATE: _____

DOCUMENT PREPARER:

_____ NAME _____ DATE

APPROVALS:

_____ INDEPENDENT TECHNICAL REVIEWER/EDITOR _____ DATE

_____ SITE PROJECT MANAGER _____ DATE

_____ WASTE CERTIFICATION OFFICIAL _____ DATE

_____ SITE PROJECT QA OFFICER _____ DATE

_____ FACILITY REPRESENTATIVE _____ DATE

Checked against edit round #5

© 2000, 2001 University of California

CONTENTS

Section **Page**

ACRONYMS v

PROCESS/STATUS CODE INDEX vii

ACCEPTABLE KNOWLEDGE SUMMARY xv

WASTE GENERATION SUMMARY DIAGRAM xviii

1.0 INTRODUCTION 1

2.0 METHODOLOGY USED TO SEARCH FOR AK RECORDS 1

3.0 DESCRIPTION OF THE WASTE STREAM 3
- 3.1 Facility and Mission 3
- 3.2 Basis, Rationale, and Assumption Used to Delineate the Waste Stream 3
- 3.3 Waste Physical Form and Content Description 4
- 3.4 Waste Volume and Time Period of Waste Generation 4
- 3.5 Waste Stream Generation Processes 4
- 3.6 Material Inputs to the Waste Generation Processes 18

4.0 DIVISION OF THE WASTE STREAM INTO LOTS 31

5.0 CORRELATIONS BETWEEN WASTE STREAMS 31

6.0 ASSIGNMENT OF WASTE MATRIX CODES 31

7.0 ASSIGNMENT OF WASTE MATERIAL PARAMETER CODES 33

8.0 ASSIGNMENT OF EPA ~~HAZARDOUS~~ WASTE NUMBERS 34
- 8.1 F, K, ~~and~~ P Listings 34
- 8.2 Toxicity Listings 35
- 8.3 Corrosivity, Reactivity, and Ignitability 39

9.0 VERIFICATION THAT IGNITABLE, REACTIVE, AND CORROSIVE WASTES WERE EXCLUDED 40

10.0 VERIFICATION THAT INCOMPATIBLE CHEMICALS WERE PROHIBITED 41

11.0 VERIFICATION THAT THERE ARE NO COMPRESSED GASES, FREE LIQUIDS, NONRADIONUCLIDE PYROPHORICS, SEALED CONTAINERS GREATER THAN FOUR LITERS IN VOLUME, OR >1% RADIONUCLIDE PYROPHORICS 41

12.0 VERIFICATION THAT THERE ARE NO POLYCHLORINATED BIPHENYLS (PCBs) IN THE WASTE STREAM 42

13.0 DETERMINATION OF THE MAXIMUM NUMBER OF CONFINEMENT LAYERS PERMITTED FOR WASTE PACKAGING 43

14.0 CITED PROCEDURES AND REQUIREMENTS DOCUMENTS 45

CONTENTS (concluded)

Tables **Page**

1 Feed Materials for Processes Contributing to Waste Streams TA-55-19 and TA-55-20 19

2 Average Isotopic Content of Plutonium Material Types and Enrichments 23

3 Average Isotopic Content of Uranium Material Types and Enrichments (Weight %) 23

4 Use of RCRA-Regulated Inorganic Chemicals in TA-55 Processes 30

5 Use of RCRA-Regulated Organic Chemicals in TA-55 Processes 32

6 Preliminary Headspace Gas Data For 60 Drums Assigned To Waste Stream TA-55-19 36

7 Maximum Layers of Confinement for be Used for TA-55-19 and TA-55-20 Waste Containers in the Absence of More Specific Waste Characterization Data 44

Attachments

1 Acceptable Knowledge Roadmap (3 pages)

2 LANL and TA-55 Site Maps (2 pages)

3 Simplified Process Flow Diagrams (8 pages)

4 TRU Waste Forms (5 pages)

5 Chemical Waste Disposal Request Form (1 page)

June to update #

ACRONYMS

AK	acceptable knowledge
ARIES	Advanced Recovery and Integrated Extraction System
CFR	*Code of Federal Regulations*
CMPO	octylphenyldiisobutylcarbamoylmethylphosphine oxide
C–N–O	carbon–nitrogen–oxygen
CSMO	Central Scrap Management Office
DBBP	dibutyl butylphosphonate
DCHP	dicesium hexachloroplutonate
DHDCMP	dihexyl N,N-diethylcarbamoylmethyl phosphonate
DL	discard limit
DOE	U.S. Department of Energy
DOR	direct oxide reduction
DTP	detailed technical procedure
DWLS	Discardable Waste Log Sheet
EPA	U.S. Environmental Protection Agency
F	RCRA hazardous waste number prefix for hazardous wastes from non-specific sources, defined in 40 CFR Subpart D, Section 261.31
FOOF	dioxygen difluoride
HEPA	high-efficiency particulate air
HWN	hazardous waste number
ID	item identification
IDC	item description code
K	RCRA hazardous waste number prefix for hazardous wastes from specific sources, defined in 40 CFR Subpart D, Section 261.32
LANL	Los Alamos National Laboratory
LLW	low-level waste
MCDOR	multicycle direct oxide reduction
MEGAS	Multiple Energy Gamma Assay System
MT	material type
NDA	nondestructive assay
NMT	Nuclear Material Technology
P	RCRA hazardous waste number prefix for acute hazardous waste defined in 40 CFR Subpart D, Section 261.33
PCB	polychlorinated biphenyl
PF	Plutonium Facility
PRQL	program required quantitation limit
PuBe → P/S	process/status [code] — plutonium–beryllium
QA	quality assurance
QP	quality procedure
R&D	research and development
RD&D	research, development, and demonstration
RCRA	Resource Conservation and Recovery Act
RFETS	Rocky Flats Environmental Technology Site

PROCESS/STATUS CODE INDEX

P/S Code	P/S Name	AK Process Report and Primary Report Section in which P/S Code is Described*		RCRA Listings for Combustible Debris
AC	Actinide chemistry, R&D	Miscellaneous Operations	3.4.3, Att. 4	D007, D009, D011, D018, D022, D038, F002, F005, ~~U213~~
AC1	Actinide chemistry, R&D	Miscellaneous Operations	3.4.3, Att. 4	D007, D009, D011, D018, D022, ~~D038,~~ F002, F005, ~~U213~~
AC2	Actinide chemistry, R&D	Miscellaneous Operations	3.4.3, Att. 4	D007, D009, D011, D018, D022, F002, F005 D038
AC3	Actinide chemistry, R&D	Miscellaneous Operations	3.4.3, Att. 4	
ACC	Ammonium chloride conversion	Special Processing	3.4.8, Att. 4	
ACD	Cascade dissolver	Special Processing	3.4.1, Att. 4	D005, D006, D007, D008, D011
ACL	Analytical chemistry laboratory	Miscellaneous Operations	3.4.4, Att. 4	D007, D009
AD	Actinide processing demonstration	Miscellaneous Operations	3.4.1, Att. 4	D004, D005, D006, D007, D008, D009, D010, D011, D019, D039, F002, F003
AL	Ash leach	Nitrate Operations	3.4.2, Att. 4	D005, D006, D007, D008, D011
AO	Assembly operation	Metal Operation Processes	3.4.3, Att. 4	
AO	Americium processing calcination	Nitrate Operations	3.4.3, 3.4.6, Att. 4	
AP	Americium purification	Nitrate Operations	3.4.3, 3.4.6, Att. 4	D007, D009
APD	Actinide processing demonstration	Miscellaneous Operations	3.4.7, Att. 4	D007, D008, D009, D019, D021, D022, D039, F002, F003
ARI	ARIES	Metal Operation Processes	3.4.3, Att. 4	
AS	Anode heel dissolution	Nitrate Operations	3.4.2, 3.4.6, Att. 4	D006, D007, D008, D011
AT	Ash testing	Nitrate Operations	3.4.2, Att. 4	D005, D006, D007, D008, D011
ATL	Advanced test line for actinide separation RD&D	Nitrate Operations	3.4.2, Att. 4	D005, D006, D007, D008, D011
AX	Solution assay	Miscellaneous Operations	3.4.3, Att. 4	D007, D009
BA	Basement isopress	Metal Operation Processes	3.4.2, Att. 4	
BAC	Bacterial decomposition of cellulose items	Nitrate Operations	3.4.2, 3.4.6, Att. 4	
BC	Physical properties	Metal Operation Processes	3.4.2, Att. 4	
BF	Unknown name for P/S code	Nitrate Operations	3.4.6, Att. 4	D006, D007, D008, D011

P/S Code	P/S Name	AK Process Report and Primary Report Section in which P/S Code is Described*		RCRA Listings for Combustible Debris
RBJ	Roasting and blending Jr	Nitrate Operations	3.4.3, Att. 4	
RC	Rotary calciner	Nitrate Operations	3.4.1, 3.4.6, Att. 4	D005, D006, D007, D008, D011
RCM	Rich column material ion exchange	Nitrate Operations	3.4.3, Att. 4	
RD	Repackaging into retrievable drums	Miscellaneous Operations	3.4.9, Att. 4	
RFX	Ion exchange	Nitrate Operations	3.4.3, Att. 4	
RL	Radiochemical coating	Metal Operation Processes	3.4.2, Att. 4	
RM	Reduction to metal	Special Processing	3.4.4, 3.4.6, 3.4.7, 3.4.8, 3.4.9, Att. 4	
RO	Oil recovery	Nitrate Operations	3.4.1, 3.4.6, Att. 4	D006, D008, D040
RR	Ion exchange	Nitrate Operations	3.4.3, Att. 4	D006, D007, D008, D009, D011
RS	Pellet sintering	Metal Operation Processes	3.4.1, Att. 4	
SA	Super acid RD&D	Miscellaneous Operations	3.4.3, Att. 4	D007, D009, D018, D038, F002, F003, F005, ~~U213~~
SB	Scrap burning	Special Processing	3.4.1, Att. 4	D005, D006, D007, D008, D011
SBB	Ca/Al scrubbing RD&D	Special Processing	3.4.9, Att. 4	
SC	Cascade dissolver, G437	Nitrate Operations	3.4.2, Att. 4	D005, D006, D007, D008, D011
SCB	Chlorination Ca/Al scrubbing RD&D	Pyrochemical Processes	3.4.2, Att. 4	
SD	Salt distillation	Pyrochemical Processes	3.4.5, Att. 4	P120
SE	Solvent extraction	Chloride Operations	3.4.3, Att. 4	D007, D008, D009, D039, F002
SL	Scrap leaching	Special Processing	3.4.1, Att. 4	D005, D006, D007, D008, D011
SMP	SP mounting preparation	Miscellaneous Operations	3.4.5, Att. 4	
SO	Super oxidizer, FOOF program	Miscellaneous Operations	3.4.2, Att. 4	D004, D005, D006, D007, D008, D009, D010, D011
SP	Scrap dissolution, G438	Nitrate Operations	3.4.2, Att. 4	D007
SRL	Special recovery line	Metal Operation Processes	3.4.2, Att. 4	
SS	Salt stripping	Pyrochemical Processes	3.4.3, 3.4.4, 3.4.5, 3.4.7, 3.4.8, Att. 4	D006, D008, P120
SSD	Special scrap dissolution	Nitrate Operations	3.4.2, 3.4.6, Att. 4	D006, D007, D008
SSMD	SS material development	Pyrochemical Processes	3.4, Att. 4	D009
STF	Standard fabrication	Miscellaneous Operations	3.4.6, Att. 4	D007

Remove change bar

Waste Generating Processes

Plutonium manufacturing, recovery, and research operations at the TA-55 Plutonium Facility, as well as associated maintenance operations, generate transuranic wastes. These operations include:

- Preparation of ultra-pure plutonium metals, alloys, and compounds
- Preparation of specific alloys, including casting and machining these materials into specific shapes
- Determination of the high-temperature thermodynamic properties of plutonium
- Reclamation of plutonium from scrap and residues produced by numerous feed sources
- Disassembly of components for inspection and analysis
- Manufacturing of parts on a limited basis

Process Feed

Plutonium metal or metal alloys; pyrochemical salts; plutonium oxides and hydroxide cakes; other actinide metals or metal alloys and oxides; reactor fuel pellets; plutonium scrap; dissassembled weapons components (pits); plutonium-beryllium sources; crucible pieces; ash; analytical laboratory solutions; residues from other DOE facilities; anode heels, Np-237 (briefly in 1993); and analytical laboratory solutions.

Waste Material Parameter List ~~(including packaging)~~

Waste materials: cellulosics, rubber, plastics; iron-based metals and alloys (<5% by volume)
Packaging materials: steel, plastics

Waste Stream Description

The combustible debris waste stream includes rubber, plastic-based, and cellulose-based waste generated at the facility. Plastic-based waste includes, but may not be limited to, polyethylene and vinyl tape; gloves; plastic vials; polystyrene; Tygon tubing; polyvinyl chloride plastic; Teflon products; Plexiglas; and dry box gloves (unleaded neoprene base). Cellulose-based waste includes, but may not be limited to, rags, wood, paper, and cardboard; laboratory coats and coveralls; booties and cotton gloves, and similar materials. The waste may also contain a small fraction (less than 5 percent) of non-combustible solids (e.g., scrap metal, metal lids, zippers, discarded tools).

RCRA Characterization

TA-55-19A is conservatively assigned the following EPA Hazardous Waste Numbers (HWNs). Many of the HWNs are time-dependent, and apply only to containers generated by a particular process over a specific period of time, as documented in process AK reports.

- F001, F002, F003 and F005

- D004, D005, D006, D007, D008, D009, D010, D011, D018, D019, D021, D022, D035, D038, D039, D040
- P120
- Drums containing waste from P/S codes AC, AC2, and SA are segregated from this waste stream until the potential applicability of HWN U213 has been resolved.

~~NOTE: Drums containing items with HWN P120 will be segregated into Waste Stream TA-55-19A before certification.~~

Radionuclide Content

These waste streams predominantly contain a variety of plutonium material types with different well-defined isotopic compositions. Americium-241, neptunium-237, and uranium-234 may be present at detectable concentrations as decay products of their plutonium precursors. Some of the processes separate plutonium from americium and uranium. The waste will usually be enriched in americium and uranium relative to plutonium, but may also be depleted in some cases. Some waste may contain uranium from one of several uranium material types. Other waste may contain various radionuclides used as radioassay sources, including americium-241, americium-243, cerium-144, curium-244, protactinium-231, neptunium-237, thorium-232, thorium-232 enriched in thorium-230, uranium-233, and depleted uranium.

Primary References for Documentation of Acceptable Knowledge

Process Acceptable Knowledge Summary Report for Chloride Operations at TA-55 (TWCP-AK-2.1-002)

Process Acceptable Knowledge Summary Report for Metal Operation Processes at TA-55 (TWCP-AK-2.1-003)

Process Acceptable Knowledge Summary Report for Miscellaneous Operations at TA-55 (TWCP-AK-2.1-004)

Process Acceptable Knowledge Summary Report for Nitrate Operations at TA-55 (TWCP-AK-2.1-005)

Process Acceptable Knowledge Summary Report for Pyrochemical Processes at TA-55 (TWCP-AK-2.1-006)

Process Acceptable Knowledge Summary Report for Special Processing at TA-55 (TWCP-AK-2.1-007)

- Preparation of ultra-pure plutonium metals, alloys, and compounds
- Preparation of specific alloys, including casting and machining these materials into specific shapes
- Determination of the high-temperature thermodynamic properties of plutonium
- Reclamation of plutonium from scrap and residues produced by numerous feed sources
- Disassembly of components for inspection and analysis
- Manufacturing of parts on a limited basis

Process Feed

Plutonium metal or metal alloys; pyrochemical salts; plutonium oxides and hydroxide cakes; other actinide metals or metal alloys and oxides; reactor fuel pellets; plutonium scrap; dissassembled weapons components (pits); plutonium-beryllium sources; crucible pieces; ash; analytical laboratory solutions; residues from other DOE facilities; anode heels, Np-237 (briefly in 1993); and analytical laboratory solutions.

Waste Material Parameter List ~~(including packaging)~~

Waste materials: cellulosics, rubber, plastics; iron-based metals and alloys (<5% by volume)
Packaging materials: steel, plastics

Waste Stream Description

The combustible debris waste stream includes rubber, plastic-based, and cellulose-based waste generated at the facility. Plastic-based waste includes, but may not be limited to, polyethylene and vinyl tape; gloves; plastic vials; polystyrene; Tygon tubing; polyvinyl chloride plastic; Teflon products; Plexiglas; and dry box gloves (unleaded neoprene base). Cellulose-based waste includes, but may not be limited to, rags, wood, paper, and cardboard; laboratory coats and coveralls; booties and cotton gloves, and similar materials. The waste may also contain a small fraction (less than 5 percent) of non-combustible solids (e.g., scrap metal, metal lids, zippers, discarded tools).

RCRA Characterization

No HWNs apply to containers in waste stream TA-55-20.

Radionuclide Content

These waste streams predominantly contain a variety of plutonium material types with different well-defined isotopic compositions. Americium-241, neptunium-237, and uranium-234 may be present at detectable concentrations as decay products of their plutonium precursors. Some of the processes separate plutonium from americium and uranium. The waste will usually be enriched in americium and uranium relative to plutonium, but may also be depleted in some cases. Some waste may contain uranium from one of several uranium material types. Other waste may contain

Edit Round #2
JTM

TA-55 PLUTONIUM FACILITY
ACCEPTABLE KNOWLEDGE REPORT

REPORT TITLE: Acceptable Knowledge Summary Report for Waste Streams TA-55-19 and TA-55-20

REPORT NUMBER: TWCP-AK-2.1-008,R.2 (LA-UR-00-5727)

WASTE GENERATED FROM WASTE STREAMS: TA-55-19, TA-55-19A, and TA-55-20

EFFECTIVE DATE: _____

NEXT REVIEW DATE: _____

DOCUMENT PREPARER:

_____ NAME _____ DATE

APPROVALS:

_____ INDEPENDENT TECHNICAL REVIEWER/EDITOR _____ DATE

_____ SITE PROJECT MANAGER _____ DATE

_____ WASTE CERTIFICATION OFFICIAL _____ DATE

_____ SITE PROJECT QA OFFICER _____ DATE

_____ FACILITY REPRESENTATIVE _____ DATE

Checked against edit round #5
JTM 4/8/01

© 2000, 2001 University of California

HISTORY OF REVISIONS

Revision No.	Date	Pages Revised	Reason for Change
0	08/31/00	—	New report (TWCP-03844)
1	12/04/00	All	Make report a controlled document and respond to CAR-00-036
1/IC1	12/15/00	Acceptable Knowledge Summary	To clarify segregation of containers in TA-55-19A
2		All	To respond to CBFO reviewer comments

Central Scrap Management Office

ACRONYMS

AK	acceptable knowledge
ARIES	Advanced Recovery and Integrated Extraction System
CFR	*Code of Federal Regulations*
CMPO	octylphenyldiisobutylcarbamoylmethylphosphine oxide
CSMO DBBP	dibutyl butylphosphonate carbon-nitrogen-oxygen
C-N-O DCHP	dicesium hexachloroplutonate
DHDCMP	dihexyl N,N-diethylcarbamoylmethyl phosphonate
DL	discard limit
DOE	U.S. Department of Energy
DOR	direct oxide reduction
DTP	detailed technical procedure
DWLS	Discardable Waste Log Sheet
EPA	U.S. Environmental Protection Agency
F	RCRA hazardous waste number prefix for hazardous wastes from non-specific sources, defined in 40 CFR Subpart D, Section 261.31
FOOF	dioxygen difluoride
HEPA	high-efficiency particulate air
HWN	hazardous waste number
ID	item identification
IDC	item description code
K	RCRA hazardous waste number prefix for hazardous wastes from specific sources, defined in 40 CFR Subpart D, Section 261.32
LANL	Los Alamos National Laboratory
LLW	low-level waste
MCDOR	multicycle direct oxide reduction
MEGAS	Multiple Energy Gamma Assay System
MT	material type
NDA	nondestructive assay
NMT	Nuclear Material Technology
P	RCRA hazardous waste number prefix for acute hazardous waste defined in 40 CFR Subpart D, Section 261.33
PF PCB	polychlorinated biphenyl Plutonium Facility
PRQL	program required quantitation limit
P/S	process/status [code]
QA	quality assurance
QP	quality procedure
R&D	research and development
RD&D	research, development, and demonstration
RCRA	Resource Conservation and Recovery Act
RFETS	Rocky Flats Environmental Technology Site
RLWTF	Radioactive Liquid Waste Treatment Facility
RMDC	Records Management/Document Control
RSWD	radioactive solid waste disposal

P/S Code	P/S Name	AK Process Report and Primary Report Section in which P/S Code is Described*		RCRA Listings for Combustible Debris
GI	Pellet grinding & inspection	Metal Operation Processes	3.4.1, Att. 4	
GMS	Open gradient magnetic separation	Nitrate Operations	3.4.1, Att. 4	
HC	Calcination	Nitrate Operations	3.4.3, 3.4.6, Att. 4	
HCD	Hydroxide cake dissolution	Nitrate Operations	3.4.2, Att. 4	D006, D007, D008, D009, D011
HD	Hydroxide cake dissolution	Nitrate Operations	3.4.2, Att. 4	D006, D007, D008, D009, D011
HG	Pu removal by mercury	Metal Operation Processes	3.4.2, Att. 4	
HGMS	High gradient magnetic separation	Nitrate Operations	3.4.1, 3.4.6, Att. 4	D006, D007, D008, D009, D011
HP	Cement fixation	Nitrate Operations	3.4.5, Att. 4	D007, D008, D009, D011, D019, D021, D022, D039, F002, F003
HRA	Hanford Reservation Material	Nitrate Operations	3.4.6, Att. 4	D005, 6, 7, 8, 9, 11,
HRS	High resolution spectroscopy	Miscellaneous Operations	3.4.5, Att. 4	
IA	Impure americium holding for discard	Nitrate Operations	3.4.5, 3.4.6, Att. 4	D006, D007, D008, D009, D011
IAM	Inspection and measurement	Special Processing	3.4.1, Att. 4	D005, D006, D007, D008, D011
IB	Matrix study of pyrochemical salts	Miscellaneous Operations	3.4.6, Att. 4	D005, D006, D007, D008, D009, D011
ICP	ICP-AES analysis	Miscellaneous Operations	3.4.4, Att. 4	D007, D009
ID	Immersion density	Metal Operation Processes	3.4.1, Att. 4	
IE	Isotope enrichment	Miscellaneous Operations	3.4.2, Att. 4	D005, D006, D007, D008, D009, D011
IN	Inspection	Metal Operation Processes	3.4.2, Att. 4	
IS	Incinerator	Nitrate Operations	3.4.1, Att. 4	D005, D006, D007, D008, D011
ITF	Impact test facility	Metal Operation Processes	3.4.2, Att. 4	
ITF4	Impact test facility	Metal Operation Processes	3.4.2, Att. 4	
ITF7	Impact test facility	Metal Operation Processes	3.4.2, Att. 4	
IX	Ion exchange	Special Processing	3.4.2, Att. 4	D006, D007, D008, D009, D011
JA	Gas isostatic press	Metal Operation Processes	3.4.2, Att. 4	
KBTF	Kolsky bar test facility	Metal Operation Processes	3.4.3, Att. 4	D008
LC	Uranium plutonium processing	Nitrate Operations	3.4.2, 3.4.6, Att. 4	
LD	Chloride leach & dissolution	Chloride Operations	3.4.2, Att. 4	D007, D008, D009
LG1	Non combustible leach	Nitrate Operations	3.4.2, 3.4.6, Att. 4	D006, D008

Create new AK Summary for TA-55-19A, delete mention of TA-55-19A on Summary for TA-55-19

ACCEPTABLE KNOWLEDGE SUMMARY FOR TA-55-19 ~~and 19A~~

Waste Stream Number and Title:	TA-55-19, Mixed Combustible Debris Waste TA-55-19A, Mixed Combustible Debris with P120
Summary Category Group:	S5000
Waste Matrix Code and Description:	S5300
TWBIR:	LA-M16
TRUCON Codes:	LA116A, LA116B, LA116C, LA116D, LA116E, LA116F, LA116H, LA116I
Maximum Layers of Packaging:	6
Site:	LANL
Waste-Generating Facility:	TA-55, Plutonium Facility (building PF-4), all wings
Time Period of Generation:	TA-55-19: 1978—present; TA-55-19A: 2/98—6/98
Defense Waste Status:	Defense-related TRU waste. There is no historical record or evidence of spent nuclear fuel or high-level waste ever having been handled at the facility.
Waste Stream Volume (as stored):	TA-55-19: 4173 containers (873 m^3) TA-55-19A: Not yet determined
Waste Stream Volume (after repackaging):	TA-55-19: 850 SWBs, 3873 drums (2390 m^3) TA-55-19A: Not yet determined

Waste Material Parameter List (including packaging)

Waste materials: cellulosics, rubber, plastics; iron-based metals and alloys (<5% by volume)
Packaging materials: steel, plastics

Waste Stream Description

The combustible debris waste stream includes rubber, plastic-based, and cellulose-based waste generated at the facility. Plastic-based waste includes, but may not be limited to, polyethylene and vinyl tape; gloves; plastic vials; polystyrene; Tygon tubing; polyvinyl chloride plastic; Teflon products; Plexiglas; and dry box gloves (unleaded neoprene base). Cellulose-based waste includes, but may not be limited to, rags, wood, paper, and cardboard; laboratory coats and coveralls; booties and cotton gloves, and similar materials. The waste may also contain a small fraction (less than 5 percent) of non-combustible solids (e.g., scrap metal, metal lids, zippers, discarded tools).

new sections

→ Facility Mission (check placement in latest Rev of QP-21)
Copy mission text from process AK Summary

→ Process feed (compiled ~~Copy~~ from all process AK ~~rep~~ summaries, then edited to delete repititious text)

Waste Generating Processes

Plutonium manufacturing, recovery, and research operations at the TA-55 Plutonium Facility, as well as associated maintenance operations, generate transuranic wastes. These operations include:

- Preparation of ultra-pure plutonium metals, alloys, and compounds
- Preparation of specific alloys, including casting and machining these materials into specific shapes
- Determination of the high-temperature thermodynamic properties of plutonium
- Reclamation of plutonium from scrap and residues produced by numerous feed sources
- Disassembly of components for inspection and analysis
- Manufacturing of parts on a limited basis

RCRA Characterization:

TA-55-19 is conservatively assigned the following EPA Hazardous Waste Numbers (HWNs). Many of the HWNs are time-dependent, and apply only to containers generated by a particular process over a specific period of time, as documented in process AK reports.

- F001, F002, F003 and F005
- D004, D005, D006, D007, D008, D009, D010, D011, D018, D019, D021, D022, D035, D038, D039, D040 19A.
- ~~TA-55-19A~~ P120 ~~is assigned in addition to the codes listed for TA-55-19.~~

NOTE: Drums containing items with HWN P120 will be segregated into Waste Stream TA-55-19A before certification.

- ~~U213~~ ← delete

Radionuclide Content

These waste streams predominantly contain a variety of plutonium material types with different well-defined isotopic compositions. Americium-241, neptunium-237, and uranium-234 may be present at detectable concentrations as decay products of their plutonium precursors. Some of the processes separate plutonium from americium and uranium. The waste will usually be enriched in americium and uranium relative to plutonium, but may also be depleted in some cases. Some waste may contain uranium from one of several uranium material types. Other waste may contain various radionuclides used as radioassay sources, including americium-241, americium-243, cerium-144, curium-244, protactinium-231, neptunium-237, thorium-232, thorium-232 enriched in thorium-230, uranium-233, and depleted uranium.

Include in Summaries for TA-55-19 and TA-55-19A

- Drums containing waste from P/S codes AC, AC2 and SA ~~will be~~ are segregated from this waste stream until the potential applicability of HWN U213 has been resolved.

ACCEPTABLE KNOWLEDGE SUMMARY FOR TA-55-20

Waste Stream Number and Title:	TA-55-20, Non-mixed Combustible Debris Waste
Summary Category Group:	S5000
Waste Matrix Code and Description:	S5300
TWBIR:	LA-T16
TRUCON Codes:	LA116A, LA116B, LA116C, LA116D, LA116E, LA116F, LA116H, LA116I
Maximum Layers of Packaging:	6
Site:	LANL
Waste-Generating Facility:	TA-55, Plutonium Facility (building PF-4), all wings
Time Period of Generation:	TA-55-20: 1979–present
Defense Waste Status:	Defense-related TRU waste. There is no historical record or evidence of spent nuclear fuel or high-level waste ever having been handled at the facility.
Waste Stream Volume (as stored):	TA-55-20: 281 containers (59 m^3)
Waste Stream Volume (after repackaging):	TA-55-20: not available

Waste Material Parameter List (including packaging)

Waste materials: cellulosics, rubber, plastics; iron-based metals and alloys (<5% by volume)
Packaging materials: steel, plastics

Waste Stream Description

The combustible debris waste stream includes rubber, plastic-based, and cellulose-based waste generated at the facility. Plastic-based waste includes, but may not be limited to, polyethylene and vinyl tape; gloves; plastic vials; polystyrene; Tygon tubing; polyvinyl chloride plastic; Teflon products; Plexiglas; and dry box gloves (unleaded neoprene base). Cellulose-based waste includes, but may not be limited to, rags, wood, paper, and cardboard; laboratory coats and coveralls; booties and cotton gloves, and similar materials. The waste may also contain a small fraction (less than 5 percent) of non-combustible solids (e.g., scrap metal, metal lids, zippers, discarded tools).

Add new sections, identical to TA-55-19: Facility Mission, and Process Feed

WASTE GENERATION SUMMARY DIAGRAM

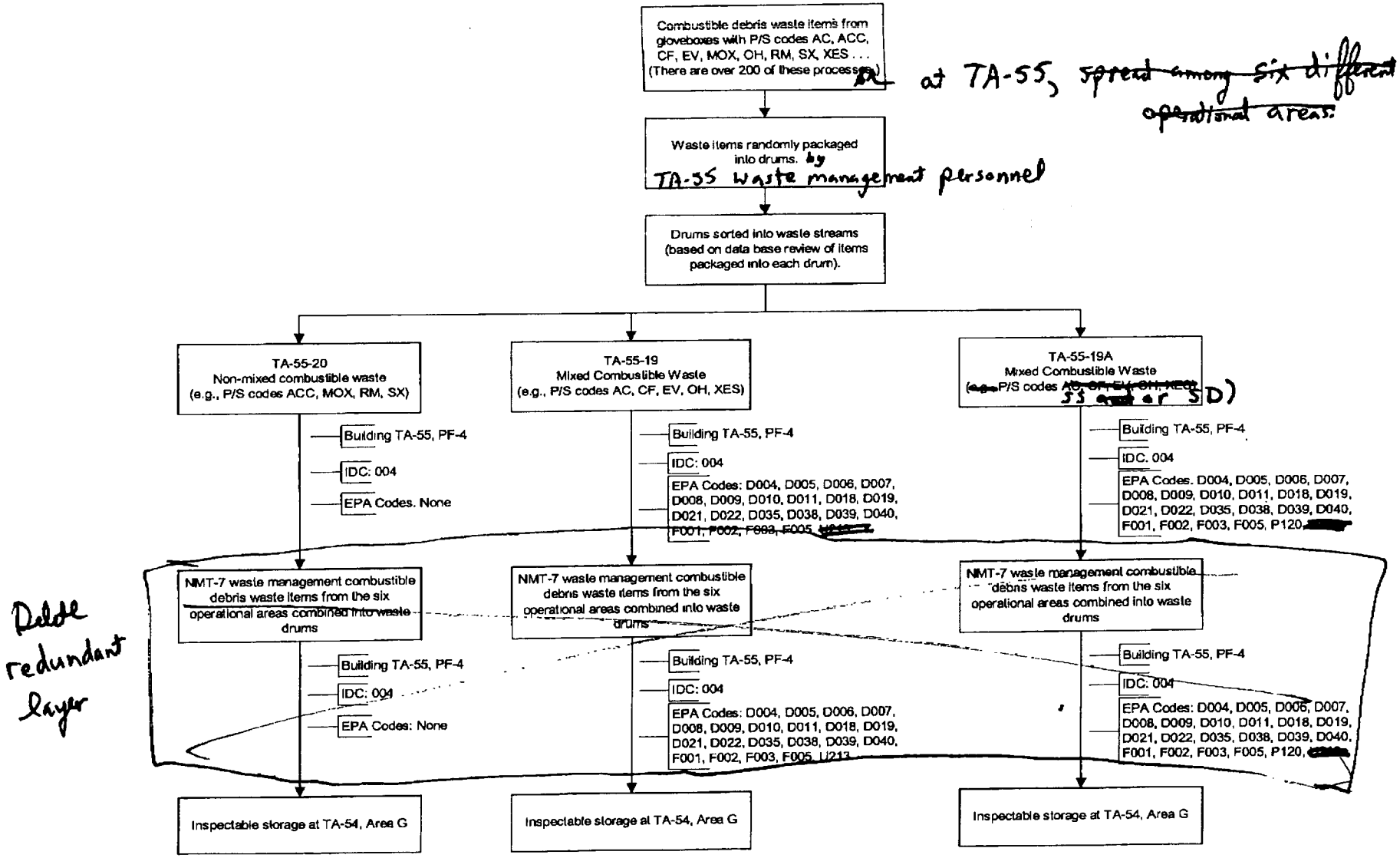

Delete redundant layer

ACCEPTABLE KNOWLEDGE SUMMARY REPORT FOR WASTE STREAMS TA-55-19 AND TA-55-20

1.0 INTRODUCTION

All transuranic (TRU) waste must be sufficiently characterized and certified before it is shipped to the Waste Isolation Pilot Plant (WIPP). The U.S. Environmental Protection Agency (EPA) allows use of acceptable knowledge (AK) for waste characterization, and defines AK in its guidance document, *Waste Analysis at Facilities that Generate, Treat, Store and Dispose of Hazardous Waste*. Attachment B, Waste Analysis Plan, to the *Hazardous Waste Facility Permit Issued to the Waste Isolation Pilot Plant* (EPA No. NM4890139088) (WIPP WAP) defines AK information and provides guidelines on how AK should be obtained and documented.

This AK summary report was prepared in accordance with *Acceptable Knowledge Documentation* (TWCP-QP-1.1-021). The primary purpose of this report is to systematically organize, evaluate, and summarize AK information about characteristics of the wastes generated by the Plutonium Facility at Technical Area (TA) 55, one of the TRU-waste generators at Los Alamos National Laboratory (LANL). By doing so, this report provides technical support for assignment of specific waste containers to the waste stream.

2.0 METHODOLOGY USED TO SEARCH FOR AK RECORDS

The AK search for the information related to waste streams TA-55-19 and -20 covered:

- Review of the *Los Alamos National Laboratory Transuranic Waste Characterization Sampling Plan* (TWCP-PLAN-0.2.7-001) (Sampling Plan) that includes information regarding all waste streams, including TA-55-19 and -20.
- Review of documents related to the waste generation and waste management activities at TA-55 as documented in the Acceptable Knowledge Roadmap (Attachment 1),
- Interviews with personnel involved with waste generation and waste management at TA-55 as documented in the Acceptable Knowledge Roadmap (Attachment 1), and
- Review of process AK reports for TA-55 processes (as discussed below), and
- Analysis of processes generating waste, as discussed in the process AK reports and in this report.

The Transuranic Waste Characterization/Certification Project (TWCP) Records Management/Document Control (RMDC) Center contains copies of the documents that are referenced in this summary report. Unclassified Controlled Nuclear Information

(UCNI) will be reported in records, rather than included in this report. Such records are identified as UCNI in the Acceptable Knowledge Roadmap (Attachment 1).

This AK summary report is based on detailed information compiled in a set of closely related reports about TRU waste generating activities at TA-55. For convenience in organizing AK for plutonium processing at this facility, the processes were categorized into six arbitrary operational areas. The multiple processes in each area are then described in detail in the following six process AK reports for plutonium:

- *Process Acceptable Knowledge Summary Report for Chloride Operations at TA-55* (TWCP-AK-2.1-002)
- *Process Acceptable Knowledge Summary Report for Metal Operation Processes at TA-55* (TWCP-AK-2.1-003)
- *Process Acceptable Knowledge Summary Report for Miscellaneous Operations at TA-55* (TWCP-AK-2.1-004)
- *Process Acceptable Knowledge Summary Report for Nitrate Operations at TA-55* (TWCP-AK-2.1-005)
- *Process Acceptable Knowledge Summary Report for Pyrochemical Processes at TA-55* (TWCP-AK-2.1-006)
- *Process Acceptable Knowledge Summary Report for Special Processing at TA-55* (TWCP-AK-2.1-007)

The process AK reports contain information on over 200 individual processes that have each been assigned a unique identifier called a process/status (P/S) code. For example, the nitrate operations report (TWCP-AK-2.1-005, R.1) covers waste generation processes and characteristics for about 80 different processes, each with its own P/S code. The search and compilation of AK information was based on P/S code, because that is the greatest level of process detail recorded in waste generation records.

as well as by

The TA-55 Plutonium Facility tracks waste items both by the process from which they originated ~~and~~ their material content. Waste items are labeled with an item identification (ID) code that contains information on the waste material parameter of the item and an embedded P/S code that corresponds to the process that produced the waste item. Waste items are packaged into waste containers based on the material content of the waste, without regard to P/S code. This practice complicates AK tracking because a single waste container can include waste items from several P/S codes. Further complication is introduced because the waste streams for TA-55 have been defined based primarily on the physical form and material content of the waste and only secondarily on the waste generation process through mixed or non-mixed waste stream designations. Hence, any given waste stream could potentially contain items from all of the plutonium recovery

TA-55-19 and TA-55-20 combustible debris waste streams were generated in the TA-55 Plutonium Facility (Building PF-4). A LANL site map and a detailed map of the buildings at TA-55, including Building PF-4, are shown in Attachment 2.

3.2 Waste Physical Form and Content Description

The TA-55-19 -19A, and-20 are defined as combustible debris waste streams (Sampling Plan, Appendix D), with TA-55-19 being a mixed waste stream and TA-55-20 its non-mixed counterpart. The waste includes paper, rags, plastic, rubber, and plastic-based and cellulose-based waste generated at the facility. Plastic-based waste includes, but may not be limited to, polyethylene and vinyl tape, gloves, plastic vials, polystyrene, Tygon tubing, polyvinyl chloride plastic, Teflon products, Plexiglas, and dry box gloves (unleaded neoprene base). Cellulose-based waste includes, but may not be limited to rags, wood, paper, and cardboard; laboratory coats and overalls; booties and cotton gloves, and similar materials. The waste may also contain a small fraction (<5%) of non-combustible solids (scrap metal, metal lids, and clothing zippers) (Sampling Plan, Appendix D).

3.3 Waste Volume and Time Period of Waste Generation

The following information is from the Sampling Plan (TWCP-PLAN-0.2.7-001, R.3, Appendix D). These values are expected to change because the sampling plan is continually updated as new waste information is obtained.

- TA-55-19 includes 4173 containers (873 cubic meters), that were generated from 1978 to the present time.
- TA-55-19A
- TA-55-20 includes 281 containers (59 cubic meters), that were generated from 1979 to the present time.

3.4 Basis, Rationale, and Assumption Used to Delineate the Waste Stream

3.5 Waste Stream Generation Processes

3.5.1 Overview

The TA-55-19 and TA-55-20 combustible debris waste streams were generated from combustible materials used in processes to recover plutonium from residues, metal fabrication, and research and development activities. The variety of plutonium handling operations includes:

- Preparing ultra-pure plutonium metals, alloys, and compounds

- Nitrate Operations
- Chloride Operations
- Miscellaneous Operations
- Special Processing
- Metal Operation Processes
- Pyrochemical Processes

Generalized flow diagrams for the six operational areas relevant to this AK search are presented as Attachment 3. With the exception of the report on chloride operations, these generalized flow diagrams indicate P/S codes for the various processes. ~~(For chloride operations, P/S codes did not correspond to individual steps as shown on the diagram, so were not included.)~~ The full block flow diagram for plutonium processing and waste management at TA-55 is given in reference TWCP-886.

The following subsections describe the processes that generated debris waste assigned to the TA-55-19 TA-55-19A, and TA-55-20 waste streams. The potential for RCRA-regulated constituents to be present due to feed materials or chemical use in these processes is summarized in Section 3.5. The applicability of EPA HWNs as a result of this potential is specified in Section 8.

3.5.3 Nitrate Operations

HRA

P/S codes AL, AO, AP, AS, AT, ATL, BAC, BF, BL, BM, BU, CC, CD, CF, CH, COD, COL, CPOD, CR, DF, DP, DS, ED, ETD, EV, FA, FC, FX, GMS, HC, HCD, HD, HGMS, HP, IA, IS, LC, LG1, LG2, LR, MAG, MAS, MB, MELL, MF, ML, MPD, NC, NL, NR, OD, OH, OY, PA, PAF, PR, PS, PT, PTS, RB, RBJ, RC, RCM, RFX, RO, RR, SC, SP, SSD, SX, TDC, UPS, US, US2, VC, VP1, VP2, VP3, VUL, ZD

A detailed description of nitrate operations can be found in *Process Acceptable Knowledge Summary Report for Nitrate Operations at TA-55* (TWCP-AK-2.1-005).

The overall goal of the nitrate operations is to recover plutonium from scrap and residues, and produce a purified plutonium oxide for conversion into metal. The primary feed sources for the nitrate operations are plutonium residues from other recovery operations (e.g., chloride operations), metal preparation, metal fabrication, analytical laboratory operations, and residues from other DOE facilities. Nitrate operations can be broken down into the following process steps:

- pretreatment
- dissolution

3.6.2

Special Processing includes processing operations for Material Type (MT) 42, and research and development (R&D) activities for MT 52. (See Section 3.5.1 for a discussion of plutonium material types.) (Refer to TWCP-698.) Because processing MT 42 is a smaller scale version of the recovery processes used for MT 52, MT 42 processing has five main recovery steps: (1) head-end operations, (2) nitrate ion exchange operations, (3) chloride ion exchange operations, (4) separation and purification by precipitation, and (5) pyrochemical processes. Only head-end operations and separation by purification and precipitation are covered here, since nitrate ion exchange operations, chloride ion exchange operations, and pyrochemical processes are covered briefly elsewhere in this report.

list as bullets →

Head-end operations leach tools, labware, crucibles, rags, etc in nitric acid to remove recoverable plutonium. Plutonium oxide is typically calcined as part of head-end operations.

Separation and purification by precipitation is a method of plutonium removal from aqueous solutions. The most common precipitation methods utilize oxalate, hydroxide, and peroxide anions. By selectively precipitating the plutonium, many of the metals remain in solution, thereby purifying the plutonium.

All wastes generated by MT 52 R&D operations are replicated for MT 42, but carry different P/S codes to differentiate and identify the radionuclide content of the waste. Outputs from Special Processing include high purity metal for casting and machining.

3.5.7 Metal Operation Processes

P/S codes AO, ARI, BA, BC, BT, CA, CN, CO, CT, DA, DOP, DT, EL, ELW, EM, EVAC, FF, FSPF, GI, HG, ID, IN, ITF, ITF4, ITF7, JA, KBTF, MA, MBC, MOX, MW, OB, OM, PCH, PD, PE, PF, PH, PIG, RAP, RAP2, RL, RS, SRL, TIGR, UA, VD, WE, WLT .

A detailed description of metal operation processes is found in *Process Acceptable Knowledge Summary Report for Metal Operation Processes at TA-55* (TWCP-AK-2.1-003).

The processes included in metal operations can be divided into three groups:

- reactor fuel development processes
- on-going metal operation processes
- developmental metal operations

Acids and bases. Acids used in the TA-55 processes covered in this report are ascorbic acid, formic acid, hydrochloric acid, Hydrofluoric acid, nitric acid, oxalic acid, perchloric acid, stearic acid, sulfuric acid, and superacids (e.g., HSO_3F). Bases used in these processes are calcium hydroxide, magnesium hydroxide, potassium hydroxide, and sodium hydroxide. No EPA HWNs are applicable to the use of these chemicals in the TA-55 processes for the following reasons:

- D002 (corrosivity) does not apply to the solid debris waste because there are no free liquids in this waste.
- D001 (ignitability) does not apply to the use of the oxidizers (nitric acid, perchloric acid, and superacids) because there are no free liquids in this waste. Perchloric acid in solutions are sent to cement fixation. The solids, perchlorate salts, are rinsed from rags with water before they are discarded, ~~so~~ such that any perchlorate salts end up dissolved in the cemented waste. ~~cementation.~~
- Formic acid and hydrofluoric acid are listed in Appendix VIII of 40 CFR Part 261, for their corrosive and toxic characteristics, with EPA HWN U123 and U134. However, these HWNs are not applicable to the manner in which these chemicals were used and discarded in the processes covered by this report.
- None of these are F, K or P-listed chemicals

Gases and cryogenic fluids. The following gases and cryogenic fluids used in the TA-55 processes are not identified as having hazardous characteristics in 40 CFR Part 261, including Appendix VIII in that regulation: argon, carbon dioxide, chlorine, halogen fluorides, hexafluoroethane, hydrogen chloride, krypton fluoride, methane, nitrogen (gas), nitrogen (liquid), perfluoropropane, and tetrafluoromethane.

The following gases used in the TA-55 processes are identified in Appendix VIII of 40 CFR Part 261 as having hazardous characteristics. The chemical name is followed by the listed EPA HWN and the P/S codes in which the gas is used:

- Fluorine (P056) is used in P/S codes CV, FDL, FLU, PI, SO
- Hydrogen fluoride (U134) is used in P/S codes MP, PI
- Nitrogen dioxide (P078) is used in P/S code HRS
- Phosgene gas (P095) is used in P/S code PTP

No EPA HWNs are applicable to the use of these gases in the TA-55 processes. Compressed gas cylinders are kept outside of the gloveboxes;

- Cadmium (D006) applies to a limited number of anode heels produced in P/S codes ER, PX, and SS using cadmium as a solvent.

- Lead (D008) was used in P/S codes DOP, ER, KBTF, PX, SS, and WE. For combustible debris waste, EPA HWN D008 is applicable to P/S codes DOP, KBTF, and PX. For P/S codes ER and SS, D008 is only applicable to the metal waste.

- Tin-lead (D008) solder was used in sensors in P/S code BT, but D008 is only applicable to the metal waste from this P/S code, and not to the combustible debris waste.

- Mercury (D009) applies to P/S code SSMD, in which it was used for about one week in the summer of 1994.

- Nickel powder ~~and nibblets~~ ~~were~~ was used in P/S code CO as a sintering aid. This metal is listed in Appendix VIII but no HWN is given.

- Sodium (D003) was used in P/S code EL. However, D003 does not apply in this case because excess Na is dissolved in Dowanol 80.

- Stainless steel (contains chromium, D007) was used in P/S code WE. However, EPA HWN D007 does not apply in this case. There is no potential to leach chromium because stainless steel is not exposed to strong acids in P/S code WE.

Inorganic chemicals. The following inorganic chemicals used in the TA-55 processes are not identified as having hazardous characteristics in 40 CFR Part 261, including Appendix VIII in that regulation: aluminum bifluoride, aluminum chloride, aluminum fluoride, aluminum nitrate, aluminum oxide, ammonium chloride, antimony pentafluoride, bromine, calcium carbonate, calcium chloride, calcium fluoride, calcium nitrate, cerium nitrate, cesium chloride, cobalt nitrate, dicesium hexachloroplutonate (DCHP), ferric ammonium sulfate hydrate, ferric nitrate, ferrous ammonium sulfate, ferrous chloride, ferrous sulfamate, FOOF, graphite, gypsum cement, hydrogen peroxide, hydroxylamine chloride, hydroxylamine hydrochloride, hydroxylamine nitrate, iodine, lanthanum nitrate, lithium chloride, magnesium chloride, magnesium oxide, magnesium perchlorate, molybdenum oxide, phosphates, Portland cement, potassium chloride, potassium fluoride, potassium permanganate, potassium thiocyanate, silicone lubricant, sodium bicarbonate, sodium carbonate, sodium chloride, sodium chlorite, sodium citrate retarder, sodium dithionate, sodium nitrate, sodium nitrite, sodium oxalate, sodium sulfate, sodium tetraborate, stannous chloride, thorium oxide, uranium oxide (depleted), zinc chloride, zinc

stearate, and zirconium carbide. Some processes indicated the use of nitrate, chloride, carbonate, bicarbonate, oxalate, and nitrite salts of sodium, potassium, lithium, magnesium, calcium, and iron.

Several inorganic chemicals used in TA-55 processes are identified in 40 CFR Part 261 or in Appendix VIII of that regulation as having hazardous characteristics. Table 4 lists these chemicals, their HWN, P/S codes in which they were used, and the applicability of the HWNs to the use of these chemicals in TA-55 processes:

Organic chemicals. The following organic chemicals used in the TA-55 processes are not identified as having hazardous characteristics in 40 CFR Part 261, including Appendix VIII in that regulation: 1-propanol, 3-in-1 household oil, alkylating agents (unspecified), bromobenzene, bromocresol purple, carbon tetrafluoride, DBBP (dibutyl butyl-phosphonate), DBBP (dibutyl butyl-phosphonate)/Isopar (isoparaffinic hydrocarbon solvent), diethyl oxalate, dihexyl n,n-diethylcarbamoylmethyl phosphonate (DHDCMP), diisopropyl benzene, Dow Corning 2000 Oil, Dowanol 80 (long-chain alcohol), ethanol, ethylene glycol, Fantastic, formamide, Fomblin brand pump oil, GoJo cleaner (kerosene derivative), hexane, hydrazine dihydrochloride, hydrazine hydrochloride,

citrapeel,

acetonitrile,

acid-based metal cleaner), MolyKote, n-dodecane, Nuetracleaner #1, Nuetracleaner #2, octylphenyl diisobutyl carbamoylmethyl phosphine oxide (CMPO), oil (engine), organic liquid emulsifier, perchlorocarbons, phenolphthalein, phosphate buffer solution, phosphine oxide, phthalate buffer solution, polyethylene glycol, polyoxyethylene-20-sorbitan laurate (surfactant), SF-2I (as coolant), silicon adhesive, silicon defoamer, sugar, surfactants, tetraethylamine hydrochloride, tetraethylamine hydroxide, tetraethylammonium hydroxide, Texaco Regal 32 oil (cutting oil), thionyl chloride, tributyl phosphate (TBP), tributyl phosphate (TBP)/Isopar (isoparaffinic hydrocarbon solvent), tributyl phosphate and iodine in kerosene, trioctylphosphine oxide (TOPO), urea, vactra oil, vacuum grease, vacuum pump oil, WD-40, and Windex.

Several organic chemicals used in TA-55 processes are identified in 40 CFR Part 261 or in Appendix VIII of that regulation as having hazardous characteristics. Table 5 lists these chemicals, their HWNs, P/S codes in which they were used, and the applicability of the HWNs to the use of these chemicals in TA-55 processes.

4.0 DIVISION OF THE WASTE STREAM INTO LOTS

TA-55-19A is a subset (i.e., lot) of waste stream TA-55-19. Waste in this lot, which is expected to consist of only a few drums, is identical to the rest of the waste stream except for the possibility that the drums may contain vanadium pentoxide (EPA HWN P120), which was used only between 02/01/98 and 06/10/98 in two specific P/S codes.

TA-55-19A is not fully defined in the sense that a list of specific waste containers in this lot has not yet been prepared. This is because P/S codes are not always explicitly identified for waste items in TA-55 waste containers. However, the possibility of extracting this information from the waste item identifiers is being evaluated. If successful, this action will permit a listing of waste containers assigned to TA-55-19A.

5.0 CORRELATIONS BETWEEN WASTE STREAMS

Waste Streams TA-55-19 and TA-55-20 have been discussed together in this AK Summary Report. These waste streams are similar in physical form and waste material content. They differ only in that TA-55-19 is assigned EPA HWNs based on P/S code information, whereas TA-55-20 contains non-mixed waste. Other waste streams resulting from the same plutonium processing activities at TA-55 but differing in waste matrix code are listed in the Sampling Plan.

6.0 ASSIGNMENT OF WASTE MATRIX CODES

The waste matrix code S5300 is assigned to the waste streams TA-55-19 and TA-55-20 based on waste generation practices described in the TA-55 Waste Management

Procedure, 1996 (TWCP-351), description of past segregation practices (TWCP-701, Section 2.1, page 4 of 43), and TA-55 process AK reports (TWCP-AK-2.1-002; TWCP-AK-2.1-003; TWCP-AK-2.1-004; TWCP-AK-2.1-005; TWCP-AK-2.1-006; and TWCP-AK-2.1-007). A more detailed waste matrix code can

Table 5. Use of RCRA-Regulated Organic Chemicals in TA-55 Processes

Organic Chemical and P/S Codes in Which It Was Used	Comments on Applicability of RCRA Codes
Acetone (P/S codes FF, ME, and MOX)	• F003 applies to P/S code ME because it may have been used in the glovebox for cleaning. • F003 does not apply to P/S code FF or MOX because it was only used outside the glovebox.
Benzene (P/S codes AC, AC1, AC2, and SA)	• D018 (benzene) applies to P/S codes AC, AC1, AC2, and SA • F005 applies to P/S codes AC, AC1, AC2, and SA, in which benzene was used as a solvent
Carbon tetrachloride (P/S codes AD, CV, PTP, and PX)	• D019 (carbon tetrachloride) applies to P/S codes AD, CV, PTP and PX. This chemical was used in PTP between 1/87 and 6/89. • F002 does not apply to P/S codes AD, CV, PTP, or PX because it was not used as a solvent or for degreasing.
Chloroform (P/S codes AC, AC1, AC2, APD, FF, and XO)	• D022 (chloroform) applies to P/S codes AC, AC1, AC2, APD, FF and XO. Concentrations in P/S code FF are expected to be below RCRA threshold because freeze-drying should have removed most, if not all, of the residual chloroform before the microspheres were taken into the glovebox for sintering.
Diethyl ether (P/S code SA)	• F003 applies to P/S code SA because of solvent use.
Freon and Freon TF (P/S codes CA, DA, MA, MW, PD, PF, SCB, SRL, UA, VD, WE and XO)	• F002 applies to P/S codes DA, MA and XO. • F002 does not apply to P/S codes CA, MW, PD, SCB, SRL, UA, VD and WE. Although Freon TF is used as a solvent to clean metal parts, the parts are routinely air-dried to avoid the need for cellulosic wipes. • F002 does not apply to P/S code PF because Freon was used as a coolant for a cutting saw.
Methanol (P/S codes AD and SO)	• F003 applies to P/S code AD because it may have been used for cleaning inside the glovebox. • F003 does not apply to P/S code SO because it was used in a cold trap outside the glovebox.
Methylene chloride (P/S code AC1)	• F002 applies to P/S code AC1 because this chemical was used as a solvent (MA) and a paint stripper (XO).
Methyl ethyl ketone (P/S codes MA and XO)	• D035 (methyl ethyl ketone) applies to P/S codes MA and XO • F005 applies to P/S codes MA and XO, in which methyl ethyl ketone was used as a paint stripper

~~Butyl alcohol (P/S codes~~

Organic Chemical and P/S Codes in Which It Was Used	Comments on Applicability of RCRA Codes
Pyridine (P/S codes AC and SA)	• D038 (pyridine) applies to P/S codes AC, AC2 and SA • F005 applies to P/S codes AC, AC2 and SA, in which pyridine was used as solvent.
Tap Magic (contains 1,1,1 trichloroethane) (P/S code MA)	• F002 does not apply to P/S code MA because Tap Magic is used as a metal cutting fluid or coolant, not as a solvent. Its use was discontinued in 1992.
Tetrachloroethane (not used)	• No RCRA codes apply to tetrachloroethane, an Appendix VIII chemical. Although it is listed on the chemical inventory for metal operations, it was never used in glovebox operations.
Tetrachloroethylene (P/S codes AD, APD, CSE, CV and SE)	• D039 (tetrachloroethylene) applies to P/S codes AD, APD, CSE and SE in which it was used until 1992. • D039 does not apply to P/S code CV because it was used as a coolant outside the glovebox. • F002 applies to P/S codes AD, APD, CSE and SE. Its use as a solvent in P/S code CSE and SE ended in 1992 • F002 does not apply to P/S code CV because it was only used as a coolant outside the glovebox.
Tetrahydrofuran	• ~~U213 applies to P/S codes AC, AC2, and SA~~.
Toluene (P/S codes AC, AC2 and SA)	• F005 applies to P/S codes AC, AC2 and SA because toluene was used as a solvent.
Trichloroethylene (P/S codes CK, EL, FF, MA, ME, and XO)	• D040 (trichloroethylene) applies to P/S codes EL, FF, MA, ME, and XO • D040 does not apply to P/S code CK because this chemical was used as a coolant outside the glovebox. • F002 applies to P/S code MA, in which trichloroethylene was used during final cleaning of metal parts from 1979 to 1992, resuming again in February 2000. • F002 does not apply to P/S codes EL or FF, in which it was used as a lubricant for a cutting saw, not as a solvent.

not be assigned to the TA-55-19 and TA-55-20 waste streams because TA-55 waste management personnel did not segregate plastic waste from cellulosic waste.

The following codes also apply to waste streams TA-55-19 and TA-55-20 from the Transuranic Waste Baseline Inventory Report (TWBIR), the TRUPACT II Content Code (TRUCON) (DOE/WIPP-89-004/Rev.13), the Radioactive Solid Waste Disposal (RSWD), and the Item Description Code (IDC) (Sampling Plan).

- TWBIR LA-M16 (TA-55-19) and LA-T16 (TA-55-20)
- TRUCON LA 116A, LA 116B, LA 116C, LA 116D, LA 116E, LA 116F, LA 116H, LA 116I
- RSWD A14, A15, A16, A17, A18, A60
- IDC 004 (combustible waste)

U213 may possibly apply to P/S codes AC, AC2, and SA. Its applicability is currently under investigation.

In addition, debris waste generated under P/S codes SD and SS between 02/01/98 and 06/10/98 are assigned EPA HWN P120 (vanadium pentoxide).

It is possible that Waste generated under P/S codes AC, AC2, and SA ~~are assigned~~ may require the assignment of EPA HWN U213 (tetrahydrofuran). This possibility is being investigated.

Because waste items from any of these P/S codes may be present in any given container of combustible debris waste, waste stream TA-55-19 is conservatively assigned the F-listings of F001, F002, F003, and F005. TA-55-19A is segregated for waste with the P-listing of P120. Waste containers assigned to waste stream TA-55-20 only contain items with known P/S codes that do not carry any EPA HWNs.

The reliability of this AK information can be assessed in part based on a review of headspace gas analyses (not WIPP-compliant) for 60 containers assigned to waste stream TA-55-19 (Table 6). Measured gas concentrations were above the program required quantitation limit (PRQL) for several regulated volatile organic compounds: acetone, ethyl benzene, methanol, methylene chloride, methyl ethyl ketone, toluene, and xylenes. These results are consistent with the AK information summarized in this waste stream report.

8.2 Toxicity Listings

Both TA-55-19 ~~(including~~ and TA-55-19A~~)~~ ~~is~~ are conservatively assigned the D-listings of D004, D005, D006, D007, D008, D009, D010, D011, D018, D019, D021, D022, D035, D038, D039, and D040. TA-55-20 has no listings.

No D-listings are applicable to combustible debris waste generated by the following P/S codes: AC3 (inactive), ACC, AO (Assembly Operation), AO (Americium Processing Calcination), ARI, BA, BAC, BC, BL, BM, BT, CA, CC, CH, CN, CO, COD, CR, CRD, CT, DF, DOP, DP, DT, ELW, EM, EVAC, FA, FC, FSPF, GI, GMS, HC, HG, HRS, ID, IN, ITF, ITF4, JA, LC, LIBS, MAG, MAS, MBC, MF, MO, MOX, MP, MW, NCD, NEPTUNIUM, NR, OB, OM, OR, OY, PA, PAF, PD, PF, PH, PI, PIG, PPD, PR, PS, RAP, RAP2, RB, RBJ, RCM, RD, RFX, RL, RM, RS, SBB, SCB, SMP, SRL, SX, TIGR, UA, UPS, US, US2, VD, VP2, VS, WE,WLT, and ZD.

Based on information in the TA-55 process AK reports, combustible debris waste generated by the following P/S codes are conservatively assigned EPA HWNs due to the potential presence of D-listed constituents. In many cases, the applicability of the HWN is limited to waste generated during a specific period of time, as discussed in the appropriate process AK report. If a D-listed constituent is known to be present in the waste at some level, the D-code is conservatively assigned unless analytical data confirm that its concentration is below the regulatory level.

Table 6. Preliminary Headspace Gas Data For 60 Drums Assigned To Waste Stream TA-55-19

	AK information			Preliminary headspace gas analyses for VOCs			
ANALYTE	Chemical used in processes	Chemical present in process feed solution	EPA HWN assignment	MDL (ppmv except for hydrogen and methane)*	Mean concentration is above MDL	PRQL	UCL_{90} analysis indicates presence above PRQL
Acetone	X	X	F003	16.12	X	100	X
Benzene	X		F005, D018	1.96	X	10	
Bromoform			None apply	2.27		10	
Butanol (n-butyl alcohol)		X F003	~~None apply~~	8.78	X	100	
Carbon Tetrachloride	X	X	D019	2.00	X	10	
Chlorobenzene		X	F002, D021	1.93	X	10	
Chloroform	X	X	D022	1.85	X	10	
Cyclohexane			---	1.88	X	10	
1,1-Dichloroethane			---	1.78		10	
1,2-Dichloroethane			---	2.40		10	
1,1-Dichloroethylene	X		None apply	2.74	X	10	
cis-1,2-Dichloroethene			None apply	2.06	X	10	
Ethyl benzene	See Note		F003	1.72	X	10	X
Ethyl ether	X		F003	1.30	X	10	
Hydrogen			---	0.02 % vol	X	0.1	
Methane	X		---	0.02 % vol	X	0.1	
Methanol	X	X	F003	11.42	X	100	X
Methyl ethyl ketone	X		F005, D035	18.42	X	100	X
Methyl isobutyl ketone			None apply	16.05	X	100	
Methylene chloride	X	X	F002	1.97	X	10	X
1,1,2,2-Tetrachloroethane			None apply	1.63	X	10	
Tetrachloroethene	X	X	F001, F002, D039	1.44	X	10	
Toluene	X		F005	1.67	X	10	X
1,1,2-Trichloro-1,2,2-trifluoroethane (also known as Freon TF and Freon 113)	X		F002	1.79	X	10	
1,1,1-Trichloroethane	X		None apply	1.82	X	10	
Trichloroethene	X		F002, D040	1.31	X	10	
1,2,4-Trimethylbenzene			---	2.04	X	10	
1,3,5-Trimethylbenzene			---	2.26	X	10	
Xylene (m and p-xylene)		X	F003	3.62	X	10	X
Xylene (o-xylene)		X	F003	1.9	X	10	X

Abbreviations: AK, acceptable knowledge; HWN, Hazardous Waste Number; MDL, Minimum Detection Limit; PRQL, Program-Required Quantitation Limit; VOC, Volatile Organic Compound

DS	D006, D007, D008, D009, D011
ED	D005, D006, D007, D008, D011
EDC	D007
EL	D040
EOC	D007, D009
ER	D006, D008
ETD	D005, D006, D007, D008, D011
EV	D006, D007, D008, D009, D011
EXT	D005, D006, D007, D008, D009, D011
FDL	D004, D005, D006, D007, D008, D009, D010, D011
FF	D022, D040
FLU	D004, D005, D006, D007, D008, D009, D010, D011
FX	D006, D007, D008, D009, D011
HCD	D006, D007, D008, D009, D011
HD	D006, D007, D008, D009, D011
HGMS	D006, D007, D008, D009, D011
HP	D007, D008, D009, D011, D019, D021, D022, D039
HRA → IA	D006, D007, D008, D009, D011 — D005, D006, D007, D008, D009, D011
IAM	D005, D006, D007, D008, D011
IB	D005, D006, D007, D008, D009, D011
ICP	D007, D009
IE	D005, D006, D007, D008, D009, D011
IS	D005, D006, D007, D008, D011
IX	D006, D007, D008, D009, D011
KBTF	D008
LD	D007, D008, D009
LG1	D006, D008
LG2	D006, D007, D008, D009, D011
LI	D005, D006, D007, D008, D009, D011
LR	D006, D007, D008, D009, D011
MA	D035, D040
MB	D007, D008, D009
ME	D007, D040
MELL	D006, D007, D008, D009, D011
ML	D006, D008
MPD	D005, D006, D007, D008, D011
MS	D007, D008, D009
NC	D006, D008
NL	D006, D008

D001 does not apply to wastes in these waste streams despite the use of ~~ftn~~ spent non-halogenated solvents (HWN F003), for the following reasons:

Bullet 1 • Rags ~~which have~~ which are above the DL for Pu are thermally decomposed, ~~and then a~~ which ~~would~~ destroys any organic component.

Bullet 2 • Rags which are below the DL for Pu are discarded ~~in~~ as combustible debris but ~~[act to calculations of]~~ headspace gas analyses support the contention that the solvents are not present in the waste at levels of concern.

Bullet 3 • Solutions containing ~~these~~ non-halogenated spent solvents are sent to the RLWTF if they are below the DL for Pu.

Bullet 4 • If above the DL, the solutions are sent to aqueous recovery processes as part of chloride or nitrate operations. ~~[Continue~~ Aqueous recovery steps include dissolution of any solid Pu in hydrochloric or nitric acid, followed by ~~precipitation, ion exchange~~ Pu recovery by ion exchange. ~~If the solutions below the DL are~~ The solutions are then below the DL and are either sent to the RLWTF or to the evaporator.

In addition, 100% of the drums are subjected to headspace gas analysis, and drums showing over 500ppm total flammable VOCs are prohibited from being shipped to WIPP. (For comparison, the explosive limit for acetone is 25,000 ppm.)

Also paste this ~~[excluding the last sentence]~~ into Section 4.3 of the Chloride and Nitrate + Miscellaneous Process AK reports.

8.3 Corrosivity, Reactivity, and Ignitability

TA-55-19 has no listings for corrosivity, reactivity, or ignitability.

TA-55-19A has no listings for corrosivity, reactivity, or ignitability.

TA-55-20 has no listings for corrosivity, reactivity, or ignitability.

See Section 10.0

D001 does not apply due to flammable organic solvent use because solutions containing these solvents are sent to aqueous recovery. For aqueous recovery, steps include dissolution of any solid Pu in 8-16 molar HNO_3 and purification by ion exchange. After recovery of Pu from ion exchange, the solutions are below the DL, which are then sent to the evaporator for volume reduction. Evaporator bottoms are fixed in cement; therefore, ignitability is not a concern in these wastes. Furthermore, the UCL calculation summary sheet for headspace gas analysis confirms the absence of these flammable compounds. [illegible]

9.0 VERIFICATION THAT IGNITABLE, REACTIVE, AND CORROSIVE WASTES WERE EXCLUDED

According to the WIPP WAP, "The prohibition of liquids and containerized gases prevents the shipment of corrosive, ignitable, or reactive wastes." Administrative controls on waste packaging were in place at various times to ensure the absence of such items from the waste stream.

- Liquids were prohibited from solid waste streams at TA-55 when the facility opened in January 1978. A waste management procedure written to cover operations at the new facility, *TA-55 Standard Operating Procedure (SOP) 406-GEN-R00*, stated that "Liquids are not permitted in any container of solid waste materials" (TWCP-3943).

- Chemical Waste Disposal Requests (see Attachment 5), introduced in June 1980, included check boxes which the waste generator was required to check if the waste contained corrosive acids or bases, or pyrophoric, flammable, corrosive, explosive, toxic, carcinogenic or highly reactive materials.

- The Certification Plan (TWCP-697) and related Generator Attachments (TWCP-701) were implemented in 1987. Waste generators were required to sign a statement on the WODF (see Attachment 4, pp. 4 and 5) documenting that the waste contained "no free liquids, pyrophorics, explosives, compressed gases, powders or materials other than the indicated matrix." Checkboxes were also present for indicating the presence or absence of corrosive chemicals. Full implementation of this generator statement occurred in May 1987.

- Waste management inspectors perform visual examination of the waste prior to its initial packaging, thus allowing the inspectors to verify the generator's WODF statement (TWCP-701, Sections 3.8.5 to 3.8.6).

In addition to the above-mentioned prohibitions on explosives in waste,

- Explosives were prohibited from TA-55 until installation of the Impact Test Facility in the early 1990s ~~Rather than bottlet wate~~ altogether

- The Waste Profile Request Form (WPRF), which has been in use at LANL since 1991, includes a statement which must be authenticated by the waste generator, that the waste is not ignitable (flash point >200°F), reactive, or corrosive.

- The TA-55 Generator Attachments to the Certification Plan were updated in 1995 (TWCP-700) but the prohibition on liquids in the waste, and the waste management inspection, remained in effect.

Hence, since the inception of operations at TA-55, corrosive and reactive wastes have been excluded from TA-55 solid wastes through the prohibition of liquids.

The absence of these prohibited items is verified through radiography of each waste container and visual examination of selected containers during TWCP characterization activities. Any free liquids are absorbed onto kitty litter (vermiculite) and discarded in an appropriate waste stream and containerized gases that are found to be present are removed, or the container is tagged as non-compliant by filing a Prohibited Waste Report in accordance with *Nonconformance Reporting and Tracking* (TWCP-QP-1.1-007).

10.0 VERIFICATION THAT INCOMPATIBLE CHEMICALS WERE PROHIBITED

Controls are in place to ensure chemical compatibility for the waste contents and the TRUPACT-II.

~~*Intro sentence on compatible here.*~~ Section 10.0 summarizes administrative controls in place at TA-55 that prohibit incompatible chemicals in the waste, and measures taken to verify their absence. In addition, all waste containers shipped from TA-55 to TA-54 for storage were evaluated for potentially incompatible chemicals in accordance with 49 CFR Subpart C—Segregation and separation chart of hazardous materials; Section 177.848, Segregation of hazardous materials, and were determined to be in compliance with this requirement.

For waste that has been generated after the implementation of the 1987 Certification Plan, Generator Attachments, waste generators signed a statement on the WODF for each waste items specifying that the waste contained "no free liquids, pyrophorics, explosives, compressed gases, powders or materials other than the indicated matrix." Prior to the installation of the Impact Test Facility in the early 1990s, explosives were prohibited from TA-55. In addition, waste management inspectors performed visual inspection of the waste prior to its initial packaging, thus allowing the inspectors to verify the generator's WODF statement.

In the event of a misfire or unconsumed explosives, a procedure is in place at TA-55 to ~~mitigate~~ ensure that ~~(TWCP~~ explosives do not enter the waste stream (TWCP-xxxx).

John Musgrave to get this reference.

Edit Round #3

CONTENTS

Section **Page**

ACRONYMS v

PROCESS/STATUS CODE INDEX vii

ACCEPTABLE KNOWLEDGE SUMMARY xv

WASTE GENERATION SUMMARY DIAGRAM xviii

1.0 INTRODUCTION 1

2.0 METHODOLOGY USED TO SEARCH FOR AK RECORDS 1

3.0 DESCRIPTION OF THE WASTE STREAM 3
- 3.1 Facility and Mission 3
- 3.2 Waste Physical Form and Content Description 4
- 3.3 Waste Volume and Time Period of Waste Generation 4
- 3.4 Waste Stream Generation Processes 4
- 3.5 Material Inputs to the Waste Generation Processes 18

4.0 DIVISION OF THE WASTE STREAM INTO LOTS 31

5.0 CORRELATIONS BETWEEN WASTE STREAMS 31

6.0 ASSIGNMENT OF WASTE MATRIX CODES 31

7.0 ASSIGNMENT OF WASTE MATERIAL PARAMETER CODES 33

8.0 ASSIGNMENT OF EPA HAZARDOUS WASTE NUMBERS 34
- 8.1 F, K, and P Listings 34
- 8.2 Toxicity Listings 35
- 8.3 Corrosivity, Reactivity, and Ignitability 39

9.0 VERIFICATION THAT IGNITABLE, REACTIVE, AND CORROSIVE WASTES WERE EXCLUDED 40

10.0 VERIFICATION THAT INCOMPATIBLE CHEMICALS WERE PROHIBITED 41

11.0 VERIFICATION THAT THERE ARE NO COMPRESSED GASES, FREE LIQUIDS, NONRADIONUCLIDE PYROPHORICS, SEALED CONTAINERS GREATER THAN FOUR LITERS IN VOLUME, OR >1% RADIONUCLIDE PYROPHORICS 41

12.0 VERIFICATION THAT THERE ARE NO POLYCHLORINATED BIPHENYLS (PCBs) IN THE WASTE STREAM 42

13.0 DETERMINATION OF THE MAXIMUM NUMBER OF CONFINEMENT LAYERS PERMITTED FOR WASTE PACKAGING 43

14.0 CITED PROCEDURES AND REQUIREMENTS DOCUMENTS 45

new section 3.2

Checked against edit round #5.

P/S Code	P/S Name	AK Process Report and Primary Report Section in which P/S Code is Described*		RCRA Listings for Combustible Debris
SX	Americium processing silicon removal	Nitrate Operations	3.4.3, 3.4.6, Att. 4	
TDC	Thermal decomposition of cellulose items	Nitrate Operations	3.4.1, Att. 4	D005, D006, D007, D008, D011
TIGR	Thermally induced gallium removal	Metal Operation Processes	3.4.3, Att. 4	
UA	Uranium fabrication	Metal Operation Processes	3.4.2, Att. 4	
UPS	Uranium/plutonium separation	Nitrate Operations	3.4.2, Att. 4	
US	Uranium separation for solid solution feed	Nitrate Operations	3.4.2, 3.4.6, Att. 4	
US2	Uranium separation for non-solid solutions feed	Nitrate Operations	3.4.2, 3.4.6, Att. 4	
VC	Variable CSMO scrap dissolution	Nitrate Operations	3.4.2, 3.4.6, Att. 4	D006, D008
VD	Vapor degreaser and sand blasting	Metal Operation Processes	3.4.2, Att. 4	
VP1	CSMO scrap dissolution	Nitrate Operations	3.4.2, 3.4.6, Att. 4	D009
VP2	Polycube processing	Nitrate Operations	3.4.1, 3.4.6, Att. 4	
VP3	Hydroxide precipitation	Nitrate Operations	3.4.3, 3.4.6, Att. 4	D009, D011
VS	Confirmation, inspection & sampling	Miscellaneous Operations	3.4.5, Att. 4	
VU	Vessel unloading	Special Processing	Att. 4	D005, D008
VUL	Vessel unloading	Nitrate Operations	3.4.1, Att. 4	D005, D008
WE	Welding	Metal Operation Processes	3.4.2, Att. 4	
WLT	Welding leak test	Metal Operation Processes	3.4.3, Att. 4	~~D008~~ delete D008
WM	Waste management	Miscellaneous Operations	3.4.9, Att. 4	D007, D008, D009, D022, D035, D040, F001, F002, F005
X0	Inactive or unspecified P/S material	Miscellaneous Operations	3.4.9, Att. 4	D007, D008, D009, D022, D035, D040, F001, F002, F005
XES	X-ray energy spectroscopy	Miscellaneous Operations	3.4.5, Att. 4	D004, D005, D006, D007, D008, D009, D010, D011
XO	Inactive or unspecified P/S material	Miscellaneous Operations	3.4.9, Att. 4	D007, D008, D009, D022, D035, D040, F001, F002, F005
XP	RD&D experimental processes	Miscellaneous Operations	3.4.4, Att. 4	D004, D005, D006, D007, D008, D009, D010, D011
ZD	Scrap oxide dissolution	Nitrate Operations	3.4.2, 3.4.6, Att. 4	

ACCEPTABLE KNOWLEDGE SUMMARY FOR TA-55-19

Waste Stream Number and Title:	TA-55-19, Mixed Combustible Debris Waste
Summary Category Group:	S5000
Waste Matrix Code and Description:	S5300
TWBIR:	LA-M16
TRUCON Codes:	LA116A, LA116B, LA116C, LA116D, LA116E, LA116F, LA116H, LA116I
Maximum Layers of Packaging:	6
Site:	LANL
Waste-Generating Facility:	TA-55, Plutonium Facility (building PF-4), all wings
Time Period of Generation:	1978–present
Defense Waste Status:	Defense-related TRU waste. There is no historical record or evidence of spent nuclear fuel or high-level waste ever having been handled at the facility.
Waste Stream Volume (as stored):	4173 containers (873 m^3)
Waste Stream Volume (after repackaging):	850 SWBs, 3873 drums (2390 m^3)

Facility Mission

TA-55 has extensive capabilities for the extraction and recovery of plutonium from residues and scraps generated from operations at various LANL facilities and other DOE sites in the defense complex. The recovered plutonium is converted into pure plutonium feedstock. These manufacturing and recovery operations, associated maintenance operations, and TA-55 plutonium research are the sources of TRU waste contaminated scrap, residues, and debris generated at TA-55. The scrap and residues are processed to recover as much plutonium as practicable before disposal. Wastes are generated from plutonium recovery and purification for defense and non-defense programs; these wastes are generated and produced in the same rooms and gloveboxes and so were not segregated until August 27, 1998.

Insert waste generating processes here

Process Feed

Don't list operations separately, combine into single list + delete repetitious text

~~CHLORIDE~~ OPERATIONS: Plutonium metal or metal alloys; ~~and oxides~~; pyrochemical salts; plutonium-beryllium sources; crucible pieces; ash; analytical laboratory solutions; and residues from other DOE facilities.

Order as shown for 1st 6 process feed items, order for remainder doesn't matter

move to follow Facility Mission

OPERATIONS

~~METAL: Plutonium metal or metal alloys and oxide~~s, disassembled weapons components (pits), other actinide metals or metal alloys and oxides, reactor fuel pellets.

ELLANEOUS OPERATIONS

MISC: Plutonium metal or metal alloy, oxides and hydroxide cakes; pyrochemical salts; anode heels; ash; and residues from other DOE facilities.

OPERATIONS

NITRATES: Plutonium ~~metal or metal alloys~~, oxides and hydroxide cakes; pyrochemical salts; crucible pieces; anode heels; ash; analytical laboratory solutions; and residues from other DOE facilities.

CHEMICAL PROCESSES

PYRO: Plutonium metal, metal alloys, or oxides; plutonium scrap; Np-237 (briefly in 1993).

PROCESSING

SPECIAL: Plutonium metal or metal alloys and oxides; pyrochemical salts; crucible pieces; anode heels; and ash.

Waste Material Parameter List (including packaging)

Waste materials: cellulosics, rubber, plastics; iron-based metals and alloys (<5% by volume)

generally

Packaging materials: steel, plastics

Waste Stream Description

The combustible debris waste stream includes rubber, plastic-based, and cellulose-based waste generated at the facility. Plastic-based waste includes, but may not be limited to, polyethylene and vinyl tape; gloves; plastic vials; polystyrene; Tygon tubing; polyvinyl chloride plastic; Teflon products; Plexiglas; and dry box gloves (unleaded neoprene base). Cellulose-based waste includes, but may not be limited to, rags, wood, paper, and cardboard; laboratory coats and coveralls; booties and cotton gloves, and similar materials. The waste may also contain a small fraction (less than 5 percent) of non-combustible solids (e.g., scrap metal, metal lids, zippers, discarded tools). generally

Waste Generating Processes

Plutonium manufacturing, recovery, and research operations at the TA-55 Plutonium Facility, as well as associated maintenance operations, generate transuranic wastes. These operations include:

- Preparation of ultra-pure plutonium metals, alloys, and compounds
- Preparation of specific alloys, including casting and machining these materials into specific shapes
- Determination of the high-temperature thermodynamic properties of plutonium
- Reclamation of plutonium from scrap and residues produced by numerous feed sources
- Disassembly of components for inspection and analysis
- Manufacturing of parts on a limited basis

RCRA Characterization:

TA-55-19 is conservatively assigned the following EPA Hazardous Waste Numbers (HWNs). Many of the HWNs are time-dependent, and apply only to containers generated by a particular process over a specific period of time, as documented in process AK reports.

- F001, F002, F003 and F005
- D004, D005, D006, D007, D008, D009, D010, D011, D018, D019, D021, D022, D035, D038, D039, D040
- Drums containing waste from P/S codes AC, AC2, and SA are segregated from this waste stream until the potential applicability of HWN U213 has been resolved (TWCP-AK-2.1-004).
- Drums containing waste generated from P/S codes SD ~~[illegible]~~ and SS between 2/98 and 6/98 are segregated ~~from~~ as a subset of TA-55-19 due to the potential presence of vanadium pentoxide (EPA HWN P120). (See separate AK Summary.)

Radionuclide Content

These waste streams predominantly contain a variety of plutonium material types with different well-defined isotopic compositions. Americium-241, neptunium-237, and uranium-234 may be present at detectable concentrations as decay products of their plutonium precursors. Some of the processes separate plutonium from americium and uranium. The waste will usually be enriched in americium and uranium relative to plutonium, but may also be depleted in some cases. Some waste may contain uranium from one of several uranium material types. Other waste may contain various radionuclides used as radioassay sources, including americium-241, americium-243, cerium-144, curium-244, protactinium-231, neptunium-237, thorium-232, thorium-232 enriched in thorium-230, uranium-233, and depleted uranium.

Primary References for Documentation of Acceptable Knowledge

Process Acceptable Knowledge Summary Report for Chloride Operations at TA-55 (TWCP-AK-2.1-002)

Process Acceptable Knowledge Summary Report for Metal Operation Processes at TA-55 (TWCP-AK-2.1-003)

Process Acceptable Knowledge Summary Report for Miscellaneous Operations at TA-55 (TWCP-AK-2.1-004)

Process Acceptable Knowledge Summary Report for Nitrate Operations at TA-55 (TWCP-AK-2.1-005)

Process Acceptable Knowledge Summary Report for Pyrochemical Processes at TA-55 (TWCP-AK-2.1-006)

Process Acceptable Knowledge Summary Report for Special Processing at TA-55 (TWCP-AK-2.1-007)

ACCEPTABLE KNOWLEDGE SUMMARY FOR TA-55-19A

Waste Stream Number and Title:	TA-55-19A, Mixed Combustible Debris with P120 NOTE: This is a ~~sub~~ waste stream TA-55-19.
Summary Category Group:	S5000
Waste Matrix Code and Description:	S5300 ~~It differs from the TA-~~ ~~A separate~~ subset (i.e., lot)
TWBIR:	LA-M16 It is distinguished from TA-55-19 only insofar as the waste has the potential to include Vanadium pentoxide (EPA HWN P120).
TRUCON Codes:	LA116A, LA116B, LA116C, LA116D, LA116E, LA116F, LA116H, LA116I
Maximum Layers of Packaging:	6
Site:	LANL
Waste-Generating Facility:	TA-55, Plutonium Facility (building PF-4), all wings
Time Period of Generation:	02/98–06/98
Defense Waste Status:	Defense-related TRU waste. There is no historical record or evidence of spent nuclear fuel or high-level waste ever having been handled at the facility.
Waste Stream Volume (as stored):	Not yet determined
Waste Stream Volume (after repackaging):	Not yet determined

Facility Mission

TA-55 has extensive capabilities for the extraction and recovery of plutonium from residues and scraps generated from operations at various LANL facilities and other DOE sites in the defense complex. The recovered plutonium is converted into pure plutonium feedstock. These manufacturing and recovery operations, associated maintenance operations, and TA-55 plutonium research are the sources of TRU waste contaminated scrap, residues, and debris generated at TA-55. The scrap and residues are processed to recover as much plutonium as practicable before disposal. Wastes are generated from plutonium recovery and purification for defense and non-defense programs; these wastes are generated and produced in the same rooms and gloveboxes and so were not segregated until August 27, 1998.

Insert waste Generating Processes here →

Process Feed

Will be copied from 19 once text is edited by June or John.

OK

move to follow Facility Mission

Waste Material Parameter List (including packaging)

Waste materials: cellulosics, rubber, plastics; iron-based metals and alloys (<5% by volume)
Packaging materials: steel, plastics

Waste Stream Description

The combustible debris waste stream includes rubber, plastic-based, and cellulose-based waste generated at the facility. Plastic-based waste includes, but may not be limited to, polyethylene and vinyl tape; gloves; plastic vials; polystyrene; Tygon tubing; polyvinyl chloride plastic; Teflon products; Plexiglas; and dry box gloves (unleaded neoprene base). Cellulose-based waste includes, but may not be limited to, rags, wood, paper, and cardboard; laboratory coats and coveralls; booties and cotton gloves, and similar materials. The waste may also contain a small fraction (less than 5 percent) of non-combustible solids (e.g., scrap metal, metal lids, zippers, discarded tools).

Waste Generating Processes

Plutonium manufacturing, recovery, and research operations at the TA-55 Plutonium Facility, as well as associated maintenance operations, generate transuranic wastes. These operations include:

- Preparation of ultra-pure plutonium metals, alloys, and compounds
- Preparation of specific alloys, including casting and machining these materials into specific shapes
- Determination of the high-temperature thermodynamic properties of plutonium
- Reclamation of plutonium from scrap and residues produced by numerous feed sources
- Disassembly of components for inspection and analysis
- Manufacturing of parts on a limited basis

RCRA Characterization:

TA-55-19 is conservatively assigned the following EPA Hazardous Waste Numbers (HWNs). Many of the HWNs are time-dependent, and apply only to containers generated by a particular process over a specific period of time, as documented in process AK reports.

- F001, F002, F003 and F005
- D004, D005, D006, D007, D008, D009, D010, D011, D018, D019, D021, D022, D035, D038, D039, D040
- P120
- Drums containing waste from P/S codes AC, AC2, and SA are segregated from this waste stream until the potential applicability of HWN U213 has been resolved.

ACCEPTABLE KNOWLEDGE SUMMARY FOR TA-55-20

Waste Stream Number and Title:	TA-55-20, Non-mixed Combustible Debris Waste
Summary Category Group:	S5000
Waste Matrix Code and Description:	S5300
TWBIR:	LA-T16
TRUCON Codes:	LA116A, LA116B, LA116C, LA116D, LA116E, LA116F, LA116H, LA116I
Maximum Layers of Packaging:	6
Site:	LANL
Waste-Generating Facility:	TA-55, Plutonium Facility (building PF-4), all wings
Time Period of Generation:	1979–present
Defense Waste Status:	Defense-related TRU waste. There is no historical record or evidence of spent nuclear fuel or high-level waste ever having been handled at the facility.
Waste Stream Volume (as stored):	281 containers (59 m^3)
Waste Stream Volume (after repackaging):	Not available

Facility Mission

TA-55 has extensive capabilities for the extraction and recovery of plutonium from residues and scraps generated from operations at various LANL facilities and other DOE sites in the defense complex. The recovered plutonium is converted into pure plutonium feedstock. These manufacturing and recovery operations, associated maintenance operations, and TA-55 plutonium research are the sources of TRU waste contaminated scrap, residues, and debris generated at TA-55. The scrap and residues are processed to recover as much plutonium as practicable before disposal. Wastes are generated from plutonium recovery and purification for defense and non-defense programs; these wastes are generated and produced in the same rooms and gloveboxes and so were not segregated until August 27, 1998.

Insert waste generating processes here

Process Feed

Will be copied from 19 once text is edited by June or John.

O/C

WASTE GENERATION SUMMARY DIAGRAM

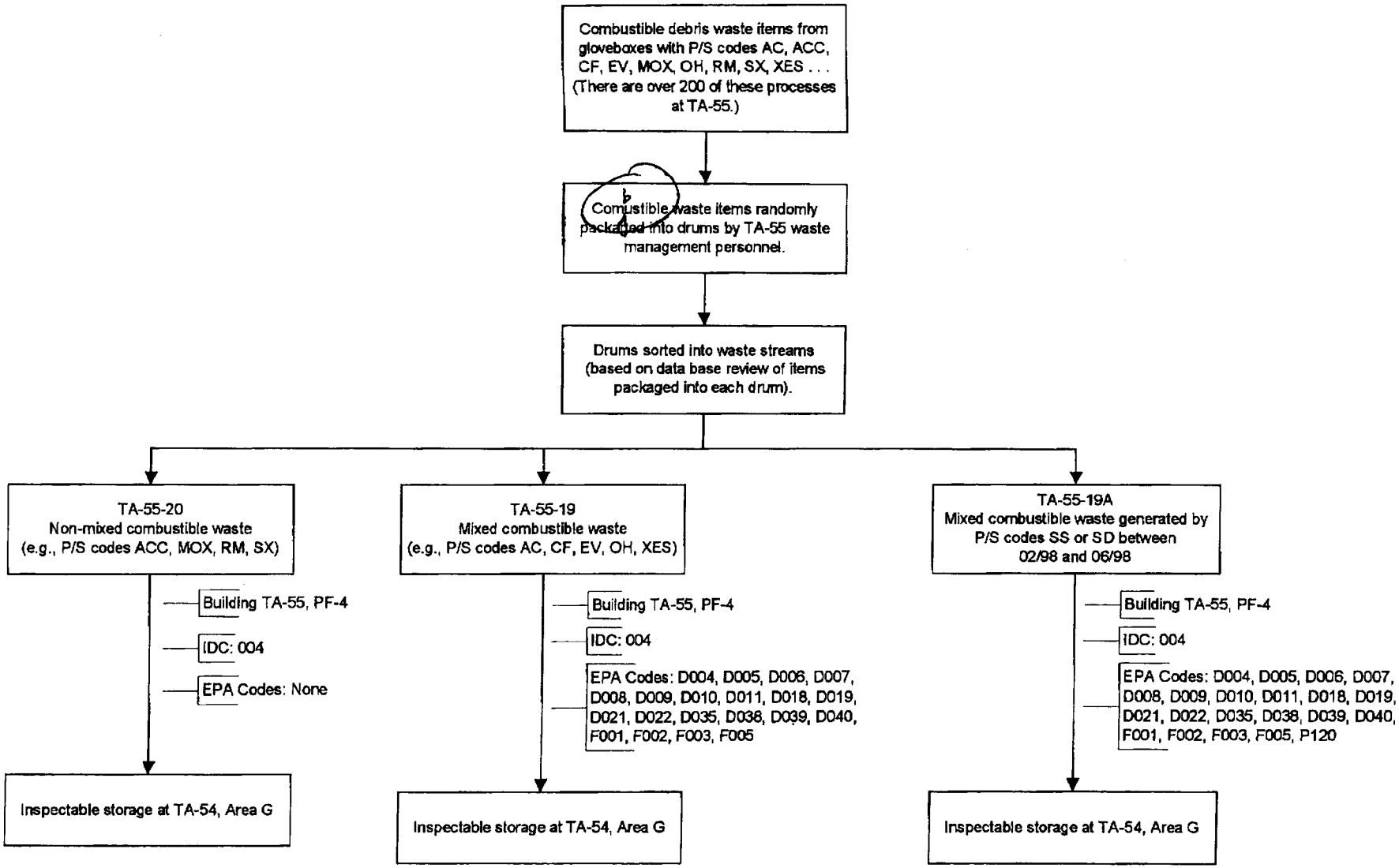

WASTE GENERATION SUMMARY DIAGRAM

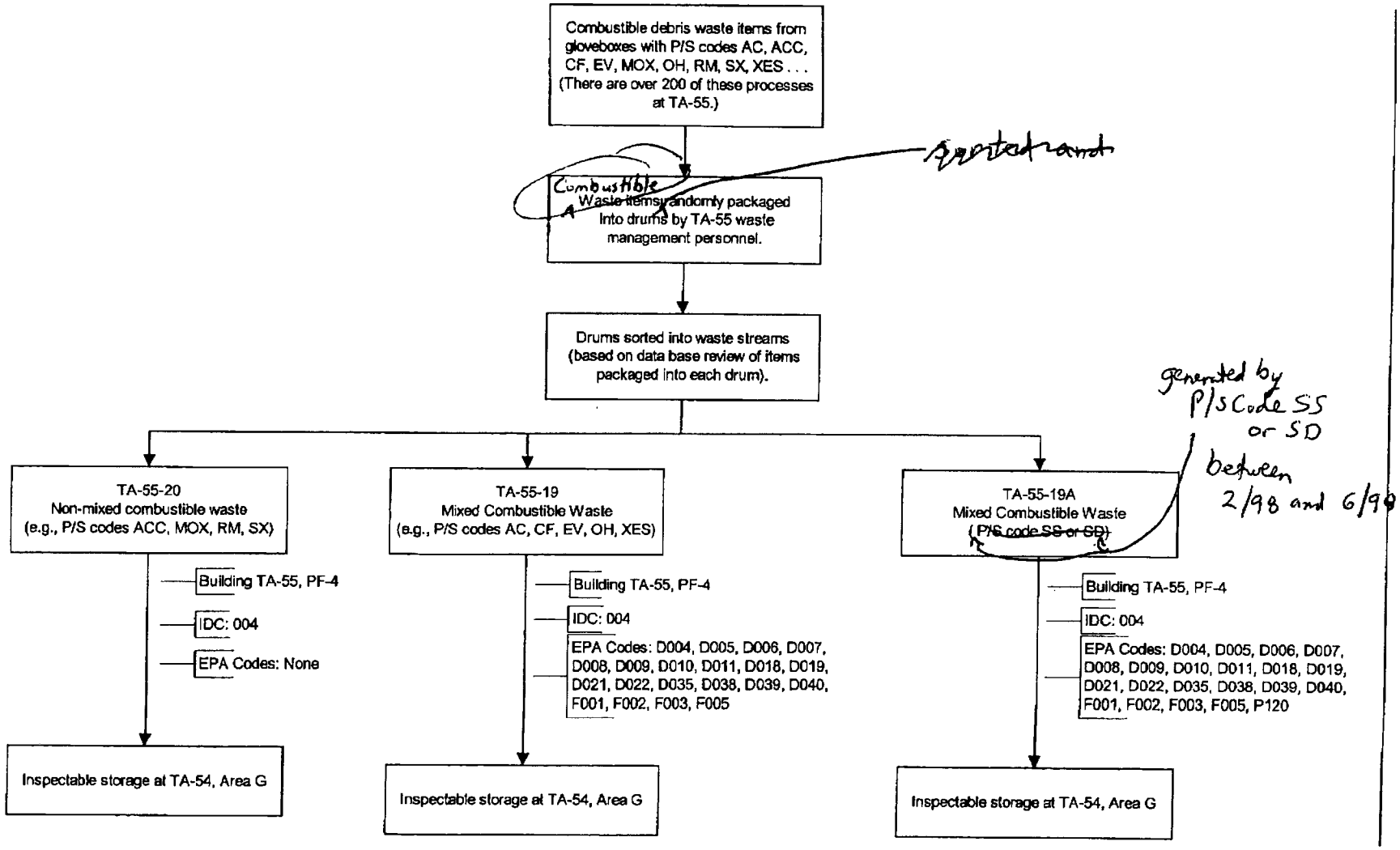

ACCEPTABLE KNOWLEDGE SUMMARY REPORT FOR WASTE STREAMS TA-55-19 AND TA-55-20

1.0 INTRODUCTION

All transuranic (TRU) waste must be sufficiently characterized and certified before it is shipped to the Waste Isolation Pilot Plant (WIPP). The U.S. Environmental Protection Agency (EPA) allows use of acceptable knowledge (AK) for waste characterization, and defines AK in its guidance document, *Waste Analysis at Facilities that Generate, Treat, Store and Dispose of Hazardous Waste*. Attachment B, Waste Analysis Plan, to the *Hazardous Waste Facility Permit Issued to the Waste Isolation Pilot Plant* (EPA No. NM4890139088) (WIPP WAP) defines AK information and provides guidelines on how AK should be obtained and documented.

This AK summary report was prepared in accordance with *Acceptable Knowledge Documentation* (TWCP-QP-1.1-021). The primary purpose of this report is to systematically organize, evaluate, and summarize AK information about characteristics of the wastes generated by the Plutonium Facility at Technical Area (TA) 55, one of the TRU-waste generators at Los Alamos National Laboratory (LANL). By doing so, this report provides technical support for assignment of specific waste containers to the waste stream.

2.0 METHODOLOGY USED TO SEARCH FOR AK RECORDS (including lot TA-55-19A)

The AK search for the information related to waste streams TA-55-19 ~~[19A]~~ and TA-55-20 covered:

- Review of the *Los Alamos National Laboratory Transuranic Waste Characterization Sampling Plan* (TWCP-PLAN-0.2.7-001) (Sampling Plan) that includes information regarding all waste streams, including TA-55-19 ~~[-19A]~~ and -20. ~~(including lot TA-55-19A)~~
- Review of documents related to the waste generation and waste management activities at TA-55 as documented in the Acceptable Knowledge Roadmap (Attachment 1),
- Interviews with personnel involved with waste generation and waste management at TA-55 as documented in the Acceptable Knowledge Roadmap (Attachment 1), and ~~process AK reports~~ S/ct
- Review of process AK reports for TA-55 processes (as discussed below), and
- Analysis of processes generating waste, as discussed in the process AK reports and in this report.

The Transuranic Waste Characterization/Certification Project (TWCP) Records Management/Document Control (RMDC) Center contains copies of the documents that

are referenced in this summary report. Unclassified Controlled Nuclear Information (UCNI) will be reported in records, rather than included in this report. Such records are identified as UCNI in the Acceptable Knowledge Roadmap (Attachment 1).

This AK summary report is based on detailed information compiled in a set of closely related reports about TRU waste generating activities at TA-55. For convenience in organizing AK for plutonium processing at this facility, the processes were categorized into six arbitrary operational areas. The multiple processes in each area are then described in detail in the following six process AK reports for plutonium:

- *Process Acceptable Knowledge Summary Report for Chloride Operations at TA-55* (TWCP-AK-2.1-002)
- *Process Acceptable Knowledge Summary Report for Metal Operation Processes at TA-55* (TWCP-AK-2.1-003)
- *Process Acceptable Knowledge Summary Report for Miscellaneous Operations at TA-55* (TWCP-AK-2.1-004)
- *Process Acceptable Knowledge Summary Report for Nitrate Operations at TA-55* (TWCP-AK-2.1-005)
- *Process Acceptable Knowledge Summary Report for Pyrochemical Processes at TA-55* (TWCP-AK-2.1-006)
- *Process Acceptable Knowledge Summary Report for Special Processing at TA-55* (TWCP-AK-2.1-007)

See next page for edits

The process AK reports contain information on over 200 individual processes that have each been assigned a unique identifier called a process/status (P/S) code. For example, the nitrate operations report (TWCP-AK-2.1-005, R.2) covers waste generation processes and characteristics for about 80 different processes, each with its own P/S code. The search and compilation of AK information was based on P/S code, because that is the greatest level of process detail recorded in waste generation records. However, as described elsewhere, explained in section 3.2, waste segregation, ...

as well as by

move to new section 3.2

The TA-55 Plutonium Facility tracks waste items both by the process from which they originated and their material content. Waste items are labeled with an item identification (ID) code that contains information on the waste material parameter of the item and an embedded P/S code that corresponds to the process that produced the waste item. Waste items are packaged into waste containers based on the material content of the waste, without regard to P/S code. This practice complicates AK tracking because a single waste container can include waste items from several P/S codes. Further complication is introduced because the waste streams for TA-55 have been defined based primarily on the physical form and material content of the waste and only secondarily on the waste generation process through mixed or non-mixed waste stream designations. Hence, any given waste stream could potentially contain items from all of the plutonium recovery

3.2.2 ~~Waste Management at TA-55~~ ~~Packaging~~ Waste Tracking at TA-55

June: check out TWCP-351 [cited in Section 7.0]

Revise last paragraphs in Section 2 (note the next-to-last paragraph has been moved to section 3.2.3):

The process AK reports contain information on over 200 individual processes that have each been assigned a unique identifier called a process/status (P/S) code. For example, the nitrate operations report (TWCP-AK-2.1-005, R.2) covers waste generation processes and characteristics for about 80 different processes, each with its own P/S code. The search and compilation of AK information was based on P/S code, because that is the greatest level of process detail recorded in waste generator records. However, as described in section 3.2, TA-55 TRU waste items have always been segregated and packaged into waste containers based on the physical form and material content of the waste, without regard to process of origin (i.e., P/S code). In order to mitigate confusion resulting from these two different ways of categorizing TA-55 waste (by process of generation and P/S code or by material content and waste stream number) separate AK reports have been prepared for each categorization method (i.e., process AK reports for process areas, and AK summary reports for waste streams). The AK information search was performed based on the processes used at TA-55 and tracked by the P/S codes, and it is summarized in the process AK reports.

This AK summary report summarizes AK information specific to the combustible debris waste streams TA-55-19 (including waste stream lot TA-55-19A) and TA-55-20.

3.0 DESCRIPTION OF THE WASTE STREAM

3.1 Facility and Mission

1st paragraph: Copy text from AK Summary

2nd paragraph: delete first sentence of existing paragraph, and continue with remainder, "The combustible waste streams TA-55-19 and TA-55-20 were generated…"

3.2 Basis, Rationale, and Assumptions for Delineation of Waste Streams

The basis for delineation of TA-55 waste streams was established by the evolving set of LANL and TA-55 waste management plans and site-specific procedures, which date back to the start of operations at the Plutonium Facility in 1978 (TWCP-352, TWCP-697, TWCP-700, TWCP-701, TWCP-3943). The stated guidance and practice from the beginning and continuing to the present day has been to handle and package all combustible and noncombustible debris waste in a similar fashion, regardless of the process of origin. Relevant details of these planning and implementation documents are summarized in this section, in order to provide background information to support the process used by TWCP to assign TA-55 waste containers to specific waste streams. This assignment is made on the basis of waste generator information compiled in the TWCP waste container data base, which comprises the bulk of the Sampling Plan. Waste generator information is reviewed to identify the types and sources of waste items present in each drum, in order to evaluate the most appropriate waste summary group, waste matrix code, and potential for the presence of hazardous constituents.

Inspection, collection, documentation and packaging operations of solid, certifiable TRU wastes at TA-55 are conducted in PF-4 by a waste management section or team (TWCP-352, TWCP-700, TWCP-701, TWCP-3943). Wastes from all TRU waste-generating activities at TA-55 are handled and packaged by this team. Materials are considered waste streams only when they have been received and processed by the waste management team. Waste segregation schemes used by this team have evolved since operations began at the Plutonium Facility in 1978.

In 1978, the standard operating procedure for waste management at TA-55 stated the guiding philosophy of minimizing the amount of waste generated, and minimizing the contamination of that waste (TWCP-3943). Discard limits were established by the waste-generating group, and approved by the division office and the DOE Field Office. Personnel were requested to sort potentially recyclable TRU waste items (i.e., those containing potentially recoverable amounts of plutonium) into classes, such as rubber, plastics, rags, non-Pu metals, glass, oils, cans, sweepings, etc. These materials were then assayed. Based upon its plutonium level relative to the DL, material was either sent to recovery operations or to "20-year" retrievable storage. All liquids, including oils, were required to be sent to recovery operations for processing. Liquids were explicitly prohibited from any container of solid waste materials.

In 1984, a lab-wide TRU Waste Certification Plan was adopted for newly generated TRU waste (TWCP-697). Each LANL waste generator was required to develop an attachment to this plan to define the details of the waste certification functions and controls that applied to their specific processes and waste streams. TA-55 prepared an attachment in March 1987 for contact-handled combustible and noncombustible solid waste (TWCP-701).

- Combustible waste forms included materials which could be reduced to an ash if desired but which did not require further processing to meet the WIPP WAC (TWCP-701). (This definition is still current.) Subcategories included plastic-base, cellulose-base and miscellaneous (graphite and graphite crucibles). It was acceptable for the combustible waste stream to include some unspecified "small" fraction of noncombustible solids such as scrap metals.
- Noncombustible waste forms included materials which could not be reduced to ash but which did meet the WIPP WAC without further processing (TWCP-701). The two subcategories were metals and non-metals. The non-metal wastes included glass, fiberglass heating mantles, porcelain crucibles, ceramic furnace tube inserts, and leaded glovebox gloves. It was acceptable for the noncombustible waste stream to include some unspecified "small" fraction of combustible solids, and which may be contained in plastics. For WIPP purposes, any waste forms which were chemically compatible and which met the WAC, could be combined into a single waste container.

In 1995, a new TRU Waste Certification Plan was adopted, including a new attachment that formalizes how the TA-55 waste management team segregates newly generated wastes into waste streams (TWCP-700). Waste materials are segregated by:

- radioisotope for nondestructive assay (NDA) and gas generation requirements,
- material matrix for NDA and TRUCON requirements, and
- hazardous constituents for RCRA and Department of Transportation (DOT) requirements.

processes that were active at TA-55 over the time span of the generation of the waste stream.

We have attempted to mitigate confusion resulting from these two different ways of categorizing TA-55 waste (by process of generation and P/S code or by material content and waste stream number) by providing separate AK reports for each categorization method (i.e., process AK reports for process areas, and AK summary reports for waste streams). The AK information search was performed based on the processes used at TA-55 and tracked by the P/S codes, and it is summarized in the process AK reports. Information specific to waste streams TA-55-19 and TA-55-20 is presented in this AK summary report. This AK summary report also contains a summary of the AK process information applicable to waste streams TA-55-19 and TA-55-20.

move to new section 3.2

The net effect of the waste packaging system used at TA-55 is that several EPA hazardous waste numbers (HWN) are conservatively assigned to individual waste streams for the purposes of WIPP disposal, because the WIPP WAP requires HWN assignment on a waste stream rather than a waste container basis. For the purposes of generator and on-site storage, however, LANL labels waste on a container by container basis. Thus, the hazardous labels on containers in storage at LANL should not be expected to correspond to the HWNs assigned to the waste stream through this AK summary report. Hazardous labels will be updated to meet WIPP disposal requirements just before loading waste containers into the Transuranic Package Transporter-Model II (TRUPACT-II) for shipping to WIPP.

3.2.2

3.0 DESCRIPTION OF THE WASTE STREAM

Copy Mission from AK Summary

Insert new 3.2 Basis, Rationale, etc.

3.1 Facility and Mission

New ¶1

~~The TA-55 Plutonium Facility processed plutonium from residues generated at LANL and throughout the defense complex into pure plutonium feedstock.~~ The combustible waste streams TA-55-19 and TA-55-20 were generated at the TA-55 Plutonium Facility as debris waste (glovebox and processing-room trash) from process operations and glovebox maintenance involved in plutonium recovery. For this reason the waste streams are defense related. However, waste also was produced from "special process" and research-related activities. These wastes were not segregated, but were commingled in the final waste containers to such an extent that segregation is not possible on the basis of waste generating process or glovebox location (TWCP-887). The waste was also co-mingled with room trash related to these same operations (both defense and non-defense), which was initially boxed as low-level waste but was returned for discard in drums as TRU waste when on-site radioassay results showed it exceeded the low-level discard limits (TWCP-816).

¶2

TA-55-19 and TA-55-20 combustible debris waste streams were generated in the TA-55 Plutonium Facility (Building PF-4). A LANL site map and a detailed map of the buildings at TA-55, including Building PF-4, are shown in Attachment 2.

3.2 Waste Physical Form and Content Description

The TA-55-19, -19A, and -20 waste streams are defined as combustible debris waste streams (Sampling Plan, Appendix D), with TA-55-19 being a mixed waste stream and TA-55-20 its non-mixed counterpart. The waste includes paper, rags, plastic, rubber, and plastic-based and cellulose-based waste generated at the facility. Plastic-based waste includes, but may not be limited to, polyethylene and vinyl tape, gloves, plastic vials, polystyrene, Tygon tubing, polyvinyl chloride plastic, Teflon products, Plexiglas, and dry box gloves (unleaded neoprene base). Cellulose-based waste includes, but may not be limited to rags, wood, paper, and cardboard; laboratory coats and overalls; booties and cotton gloves, and similar materials. The waste may also contain a small fraction (<5 percent) of non-combustible solids (scrap metal, metal lids, and clothing zippers) (Sampling Plan, Appendix D).

3.3 Waste Volume and Time Period of Waste Generation

The following information is from the Sampling Plan (TWCP-PLAN-0.2.7-001, R.3, Appendix D). These values are expected to change because the sampling plan is continually updated as new waste information is obtained.

- TA-55-19 includes 4173 containers (873 cubic meters), that were generated from 1978 to the present time.
- The number of containers to be included TA-55-19A has not yet been determined.
- TA-55-20 includes 281 containers (59 cubic meters), that were generated from 1979 to the present time.

3.4 Basis, Rationale, and Assumption Used to Delineate the Waste Streams

Waste Management Categorization at TA-55

3.5 Waste Stream Generation Processes

3.5.1 Overview

The TA-55-19, -19A, and -20 combustible debris waste streams were generated from combustible materials used in processes to recover plutonium from residues, metal fabrication, and research and

3.5.2 Process Flow Diagrams

Detailed information about the TA-55 plutonium recovery processes can be found in the Process AK reports. For purposes of the AK search, and to allow convenient referral to and referencing of the Process AK reports in this waste stream AK Summary Report, the processes have been divided into six major areas:

- Nitrate Operations (TWCP-AK-2.1-005)
- Chloride Operations (TWCP-AK-2.1-002)
- Miscellaneous Operations (TWCP-AK-2.1-004)
- Special Processing (TWCP-AK-2.1-007)
- Metal Operation Processes (TWCP-AK-2.1-003)
- Pyrochemical Processes (TWCP-AK-2.1-006)

Generalized flow diagrams for the six operational areas relevant to this AK search are presented as Attachment 3. ~~With the exception of the report on chloride operations, these generalized flow diagrams~~ and indicate P/S codes for the various processes. The full block flow diagram for plutonium processing and waste management at TA-55 is given in reference TWCP-886.

The following subsections describe the processes that generated debris waste assigned to the TA-55-19, -19A, and -20 waste streams. The potential for RCRA-regulated constituents to be present due to feed materials or chemical use in these processes is summarized in Section 3.5. The applicability of EPA HWNs as a result of this potential is specified in Section 8.

3.5.3 Nitrate Operations

P/S codes AL, AO, AP, AS, AT, ATL, BAC, BF, BL, BM, BU, CC, CD, CF, CH, COD, COL, CPOD, CR, DF, DP, DS, ED, ETD, EV, FA, FC, FX, GMS, HC, HCD, HD, HGMS, HP, HRA, IA, IS, LC, LG1, LG2, LR, MAG, MAS, MB, MELL, MF, ML, MPD, NC, NL, NR, OD, OH, OY, PA, PAF, PR, PS, PT, PTS, RB, RBJ, RC, RCM, RFX, RO, RR, SC, SP, SSD, SX, TDC, UPS, US, US2, VC, VP1, VP2, VP3, VUL, ZD

A detailed description of nitrate operations can be found in *Process Acceptable Knowledge Summary Report for Nitrate Operations at TA-55* (TWCP-AK-2.1-005).

The overall goal of the nitrate operations is to recover plutonium from scrap and residues, and produce a purified plutonium oxide for conversion into metal. The primary feed sources for the nitrate operations are plutonium residues from other recovery operations (e.g.,

The evaporator processes plutonium-poor liquids in order to re-concentrate plutonium, if possible, or to reduce the volume of liquid waste. Evaporator bottoms are either sent back to ion exchange or discarded to cement fixation, depending on their plutonium content. Heavy metals that may be present are concentrated in this process.

In the cement fixation step, wastes with low plutonium concentrations are collected and immobilized in cement. Most if not all of the waste generated under these processes (P/S codes CF, HP, and IA) are classified as cemented wastes and would not be part of the debris waste streams.

3.5.4 Chloride Operations

P/S codes CL, CLRD, CLS, CS, CSE, CW, CX, CXL, LD, MB, MS, PB, PRR, PUB, and SE

A detailed description of chloride operations can be found in *Process Acceptable Knowledge Summary Report for Chloride Operations at TA-55* (TWCP-AK-2.1-002).

The overall goal of the chloride operations is to recover plutonium from scrap and residues and produce a purified plutonium oxide for conversion to metal. The primary feed sources are plutonium residues from pyrochemical operations, PuBe neutron sources, analytical laboratory solutions, and residues from other DOE facilities. Chloride operations can be broken down into the following process steps:

- pretreatment
- dissolution
- purification
- hydroxide precipitation

Pretreatment may include sorting, crushing, and/or pulverizing feed materials prior to being fed into later steps of chloride operations. A separate pretreatment procedure is the decladding of plutonium-beryllium sources. The PuBe metal alloy is removed from the sources, which are then entered into the chloride line for plutonium recovery along with other materials.

In the dissolution step, hydrochloric acid is used to leach and dissolve plutonium from scrap, crucibles, residues, and various solutions, including solutions from the analytical chemistry laboratory. Enriched solutions undergo further purification (see next paragraph), and solid wastes are discarded as debris waste or cement fixation ~~(see Section 3.4.2.1, Nitrate Operations)~~.

sent to

~~TWCP-AK-2.1-005~~

Purification steps may include solvent extraction, ion exchange, and oxalate precipitation, depending on the chemical nature of the material to be purified. Ion exchange columns are used to collect plutonium and separate out impurities. Enriched solutions may be further treated with oxalic acid to precipitate plutonium oxalate, which is converted to plutonium oxide.

In the hydroxide precipitation step, plutonium in solutions from purification steps is precipitated with potassium, magnesium, or sodium hydroxide. The resulting enriched hydroxide cakes become feed material for nitrate operations [~~see Section 3.4.2.1, Nitrate Operations~~], and liquid meeting the TA-50 WAC is sent to the RLWTF using the caustic waste line. Some hydroxide cakes are returned to the dissolution step for re-processing.

3.5.5 Miscellaneous Operations

P/S codes AC, AC1, AC2, AC3, ACL, AD, APD, AX, CK, CV, EDC, EOC, EXT, FDL, FLU, HRS, IB, ICP, IE, LI, LIBS, ME, NCD, RASS/RSS, RD, SA, SMP, SO, STF, VS, WM, X0, XES, XO, XP

A detailed description of miscellaneous operations can be found in *Process Acceptable Knowledge Summary Report for Miscellaneous Operations at TA-55* (TWCP-AK-2.1-004).

Research and development projects at TA-55 include an array of activities involving applied techniques and methods designed to study and improve processes associated with the purification, separation, extraction, recovery, and characterization of actinides (primarily plutonium) from various matrices. General types of miscellaneous processes are described below.

Extraction/Separation Studies. A series of similar actinide extraction, separation, and characterization R&D studies involved processing of actinide hydroxide cakes from chloride and nitrate operations, development of sensors and instrumentation for online chemical analysis, and purification process development ~~(R&D)~~. The process R&D activities were of a non-routine developmental nature involving research, process development, small scale "trouble-shooting," and occasionally preparation of various isotopes and isotopic mixtures of plutonium, uranium, americium, and neptunium.

Halogenation Studies. A variety of R&D efforts used fluorinating agents to fluorinate samples containing plutonium residues. A gas flow loop was used to pass a fluorinating agent through a gas-solid reactor where plutonium in the solid residue reacted chemically to form solid PuF_4 or gaseous PuF_6. Gaseous PuF_6 was trapped in a cold trap, distilled, and

involved crushing, pulverizing, blending, roasting, and sieving pyrochemical salts. The results were used to determine handling and processing of the salts and for correction of bias measurements. The feed material consisted of high-purity oxides to use in the fabrication of standards to be used at LANL and throughout the DOE complex.

A small basic research operation that began in March 1992 explored aqueous extraction of plutonium from various waste streams, particularly used pyrochemical salts.

Hydrothermal Processing. The hydrothermal processing procedure involves the reaction of aqueous/organic mixtures, pure organic liquids, or contaminated combustible solids (e.g., ion exchange resins, plastic filters, and cellulose rags) under supercritical conditions (i.e., high temperature and pressure). Feed streams include, but are not limited to, carbon tetrachloride, tributyl phosphate, and organic solvents. Process effluents are gases, liquids and salts. Organic components are oxidized to carbon dioxide. Nitrate contaminants are converted to nitrogen gas and some nitrous oxide. Components such as chlorine, sulfur, and phosphorus are oxidized and converted to acids or salts. Gases are liberated; solids and liquids are collected for recovery or disposal.

Electrochemistry Experiments. Electrochemistry methodologies were designed to decontaminate items, replace processes that produce large amounts of waste, or enhance chemical reactions. The process involved uranium decontamination of disassembled weapon components from various sites with various levels of surface contamination with plutonium. The operation was strictly an aqueous process in which an alkaline solution was reacted with the components to precipitate uranium. Significant amounts of metal could be stripped in a short period of time. The ~~precipitated~~ solution ~~comprised either uranyl hydroxide or uranyl sulfate, which~~ containing the precipitated uranium salts was then dried for mass balance.

Metallography. The purpose of the metallography operation is to characterize the microstructure of metallic or ceramic pieces to verify and establish the quality and effectiveness of welds. Materials examined consist of plutonium and uranium carbides, nitrides, and oxides, as well as zirconium and tantalum alloys, and stainless steel. Metal pieces (pellets) are cut with a diamond saw. Ceramic pieces are subjected to grinding with standard metal grinding media (e.g., papers impregnated with silicon carbides and diamond). The materials are polished with several different chemical compounds.

Waste Management Operations. P/S code RD was used only in 1984–1986. It allowed for tracking of demonstration drums (one drum each year) that were packaged and prepared in accordance with the TA-55

A detailed description of special processing is found in *Process Acceptable Knowledge Summary Report for Special Processing at TA-55* (TWCP-AK-2.1-007).

and Table 2 descriptions

Special Processing includes processing operations for Material Type (MT) 42, and research and development (R&D) activities for MT 52. (See Section 3.6.2 for ~~a discussion of~~ plutonium material types.) (~~Refer to TWCP-698.~~) Because processing MT 42 is a smaller scale version of the recovery processes used for MT 52, MT 42 processing has five main recovery steps:

- head-end operations
- nitrate ion exchange operations
- chloride ion exchange operations
- separation and purification by precipitation
- pyrochemical processes

Only head-end operations and separation by purification and precipitation are covered here, since nitrate ion exchange operations, chloride ion exchange operations, and pyrochemical processes are covered briefly elsewhere in this report.

Head-end operations leach tools, labware, crucibles, rags, etc in nitric acid to remove recoverable plutonium. Plutonium oxide is typically calcined as part of head-end operations.

Separation and purification by precipitation is a method of plutonium removal from aqueous solutions. The most common precipitation methods utilize oxalate, hydroxide, and peroxide anions. By selectively precipitating the plutonium, many of the metals remain in solution, thereby purifying the plutonium.

All wastes generated by MT 52 R&D operations are replicated for MT 42, but carry different P/S codes to differentiate and identify the radionuclide content of the waste. Outputs from Special Processing include high purity metal for casting and machining.

3.5.7 Metal Operation Processes

P/S codes AO, ARI, BA, BC, BT, CA, CN, CO, CT, DA, DOP, DT, EL, ELW, EM, EVAC, FF, FSPF, GI, HG, ID, IN, ITF, ITF4, ITF7, JA, KBTF, MA, MBC, MOX, MW, OB, OM, PCH, PD, PE, PF, PH, PIG, RAP, RAP2, RL, RS, SRL, TIGR, UA, VD, WE, WLT

Pyrochemical processes include metal preparation, metal purification, and ancillary metal production operations. Pyrochemical process outputs are most often high purity metals for metal operations.

Metal preparation processes include the following operations:

Metal Preparation Line. The metal preparation line produces plutonium metal from fluoride salts ~~derived by reacting~~ hydrogen fluoride gas with plutonium oxides obtained from calcination of oxalate or peroxide precipitates from the aqueous nitrate or chloride process lines. The plutonium compound is further reacted with various chemicals to produce plutonium metal, which can then be recovered as a button by breaking the crucible.

Direct Oxide Reduction (DOR) and Multiple-Cycle Direct Oxide Reduction (MCDOR). In the single pass DOR process, plutonium oxide ~~and calcium~~ *metal* are reacted in molten calcium chloride ($CaCl_2$) or $CaCl_2$ mixed with calcium fluoride (CaF_2), to produce plutonium metal. The reaction is conducted in a magnesium oxide (MgO) crucible. After cooling, a plutonium metal button is removed by breaking the crucible. A layer of salt above the button contains unreacted oxide and metal shot, which was sometimes *recovered* by addition of fresh salt plus additional calcium metal.

To minimize the salt waste, the multicycle DOR (MCDOR) process was started, in which the molten salt is regenerated by sparging the $CaCl_2$-CaO mixture with chlorine gas between multiple plutonium metal production runs. After approximately five cycles of metal production, the mixture is cooled and the salt and metal phases are separated.

Metal purification processes include the following:

Molten Salt Extraction (MSE). MSE is used to separate americium and the more reactive elements such as rare earth elements, alkali metals, and alkaline earth metals from plutonium metal (TWCP-352). This process is employed only if the americium content is greater than 1000 ppm. In the original process, which operated from 1979 to 1988, magnesium chloride ($MgCl_2$) was added to the impure plutonium metal in a molten salt of sodium chloride (NaCl) and potassium chloride (KCl), contained in a MgO crucible and heated to 750°C. The magnesium chloride oxidized americium to $AmCl_3$, although some plutonium was also converted to the chloride salt form. In 1988, the MSE process was converted to use plutonium chloride ($PuCl_3$) produced by in-situ chlorination in a tantalum crucible. In the LANL process, 90 percent of the americium and 10 percent of the plutonium are transferred from the

was broken down into phosgene, carbon monoxide, and carbon dioxide gases in this process, which was active between January 1987 and June 1989, at which time the process switched to the use of phosgene gas until the process ended in May 1991. Feed material was high purity oxides from the vault or from other P/S codes. The product plutonium trichloride was reduced to metal by the MSE or ER processes.

3.6 Material Inputs to the Waste Generation Processes

Material inputs to the waste generation processes derive from three general sources: (a) feed material, (b) chemical use, and (c) ancillary material inputs such as those related to the use of laboratory equipment and materials and glovebox maintenance activities. The feed materials for TA-55 processes that generate waste in waste streams TA-55-19 and TA-55-20 consist of the general types of materials listed in Table 1 that are obtained either from the storage vault, as process output from various P/S codes, or from sources outside TA-55, including other DOE facilities. Chemical use is discussed in Section 3.6.3. Material waste form inputs are discussed in Section 3.6.1. Radionuclide inputs are discussed in Section 3.6.2.

3.6.1 Physical Waste Form Identification

Plutonium-processing facilities generate contaminated/combustible debris waste from:

- Plastic materials that result in combustible waste such as Tygon tubing, polyvinyl chloride vials, plastic bags, old bag-out stubs, etc.
- Cellulose-based cleaning aids and personal protective equipment such as rags, paper wipes, laboratory coats, coveralls, booties, etc.

Table 1. Feed Materials for Processes Contributing to Waste Streams TA-55-19 and TA-55-20

Feed Material	Potential Presence of RCRA-Regulated Substances	P/S Codes, Listed by Process

- Rubber and Teflon-based products used in the operations, such as rubber gloves, Teflon tape, gaskets, stoppers, etc.

Waste items from several different processes were segregated by physical waste form (e.g., combustible debris, metal, glass, etc.) and packaged into waste containers. The physical description of each waste item generated was documented on a Waste Origination and Disposition Form (WODF) by the waste generator according to controlled procedures. The P/S code for many waste items is also documented on this form, although recording of P/S codes was spotty before about 1990. TRU waste drums containing one or more waste items were packaged by the Nuclear Material Technology Group (NMT-7) according to procedures referenced in the applicable version of the TA-55 Attachments to the Certification Plan (TWCP-697). Sample attachments are referenced as TWCP-701 (for 1987) and TWCP-700 (for 1995). In the packaging process, a standard form, the Discardable Waste Log Sheet (DWLS), was used to list each ID code and record its matrix material. This form was signed by the waste packager and approved by quality assurance personnel.

Both the WODFs and DWLS for each TRU waste drum have been maintained as hard copy records by the generator. For waste stream TA-55-19, example copies of these container records (for combustible debris) are included in Attachment 4. Note that this waste container (LA00000056636) contains waste items generated by three different P/S codes (CXL, ED, and SC), each with its own completed WODF.

3.6.2 Radionuclide Content Identification

The primary Pu material type inputs for metal operation processes at TA-55 are listed in Table 2. The designation *material type* (e.g., MT 52) is used within the DOE Complex to describe the isotopic composition of common blends of radioactive materials used within the Complex. The material type notation was developed because it is a convenient way to describe material types that have very consistent isotopic compositions. Table 2 indicates the isotopic composition of the material types at the time the waste was characterized.

The material type provides the basis for estimating an upper bound for U-234, U-235, and Am-241 contents based on the rate of decay of their precursors, Pu-238, Pu-239 and Pu-241, respectively. The results of these calculations are also tabulated in Table 2, assuming (a) none of these isotopes were initially present in the material, (b) the oldest Pu material in inventory dates back to 1 January 1960, and (c) the waste was packaged on 1 January 1996, making it 36 years old (TWCP-698).

The purpose of these bounding calculations is to provide a basis for identifying significant enrichment or depletion of one radionuclide versus another based on radioassays of individual waste containers.

- Th-232 enriched with Th-230—very small quantity in P/S codes BC and WE

- U-235 and U-238—expected in all P/S codes applicable to Nitrate Operations (TWCP-AK-2.1-005, R.1)

During TWCP characterization, the contents of each waste package undergo non-destructive analysis to provide detailed radioisotopic data. These data will be used to evaluate the accuracy of AK information in accordance with *Waste Characterization Data Reconciliation with Acceptable Knowledge* (TWCP-DTP-1.2-064). If warranted, this AK report will be updated to incorporate the results of these comparisons.

3.6.3 Chemical Content Identification

Chemical contents of process inputs and outputs were compiled from chemical lists contained in procedures reviewed during the process AK search and from SME input. Individual process AK reports contain detailed assessments of these chemical inputs, and of the applicability of EPA HWNs. In this section, discussion of chemical inputs are divided into the following categories:

- Acids and bases

- Gases and cryogenic fluids

- Metals

- Inorganic chemicals ~~that are not included in 40 *Code of Federal Regulations* (CFR) Part 261~~

- ~~Inorganic chemicals that are included in 40 CFR Part 261, including Appendix VIII to that regulation~~

- Organic chemicals ~~that are not included in 40 CFR Part 261~~

- ~~Organic chemicals that are included in 40 CFR Part 261, including Appendix VIII to that regulation.~~

Acids and bases. Acids used in the TA-55 processes covered in this report are ascorbic acid, formic acid, hydrochloric acid, Hydrofluoric acid, nitric acid, oxalic acid, perchloric acid, stearic acid, sulfuric acid, and superacids (e.g., HSO_3F). Bases used in these processes are calcium hydroxide, magnesium hydroxide, potassium hydroxide, and sodium hydroxide. No EPA HWNs are applicable to the use of these chemicals in the TA-55 processes for the following reasons: l.c.

- D002 (corrosivity) does not apply to the solid debris waste because there are no free liquids in this waste.

Potentially Ignitable

- D001 (ignitability) does not apply to the use of the oxidizers (nitric acid, perchloric acid, and superacids) because there are no free liquids in this waste. Perchloric acid in solutions are sent to cement fixation. The solids (perchlorate salts) are rinsed from rags with water before they are discarded, such that any dissolved perchlorate salts also end up in the cemented waste.

- Formic acid and hydrofluoric acid are listed in Appendix VIII of 40 CFR Part 261, for their corrosive and toxic characteristics, with EPA HWN U123 and U134. However, these HWNs are not applicable to the manner in which these chemicals were used and discarded in the processes covered by this report.

- None of these are F, K or P-listed chemicals

Gases and cryogenic fluids. The following gases and cryogenic fluids used in the TA-55 processes are not identified as having hazardous characteristics in 40 CFR Part 261, including Appendix VIII in that regulation: argon, carbon dioxide, chlorine, halogen fluorides, hexafluoroethane, hydrogen chloride, krypton fluoride, methane, nitrogen (gas), nitrogen (liquid), perfluoropropane, and tetrafluoromethane.

The following gases used in the TA-55 processes are identified in Appendix VIII of 40 CFR Part 261 as having hazardous characteristics. The chemical name is followed by the listed EPA HWN and the P/S codes in which the gas is used:

- Fluorine (P056) is used in P/S codes CV, FDL, FLU, PI, SO
- Hydrogen fluoride (U134) is used in P/S codes MP, PI
- Nitrogen dioxide (P078) is used in P/S code HRS
- Phosgene gas (P095) is used in P/S code PTP

No EPA HWNs are applicable to the use of these gases in the TA-55 processes. Compressed gas cylinders are kept outside of the gloveboxes; most are even outside the building, and the gases are plumbed into the glovebox. Thus the gas cylinders are not discarded with TRU wastes. Additional reasons are as follows:

- D002 (corrosivity) does not apply to the use of hydrogen fluoride because there are no free liquids in the solid TRU waste.

- D003 (reactivity) does not apply to phosgene because any excess chemical was passed through a solution of sodium hydroxide or potassium hydroxide, thereby producing a chloride salt solution.

- P056 (fluorine), P078 (nitrogen dioxide) and P095 (phosgene) are not applicable to the listed TA-55 processes because of the manner in which these gases are used and discarded in the processes covered by this report.

- Hydrogen fluoride (U134) is listed in Appendix VIII of 40 CFR Part 261 for its corrosive and toxic characteristics. However, this code is not applicable to the manner in which this gas is used and discarded in the processes covered by this report.

Metals. The following metals used in the TA-55 processes are not identified as having hazardous characteristics in 40 CFR Part 261, including Appendix VIII of that regulation: bismuth, bismuth-tin alloy, calcium, copper wool, gallium (metal, oxide or salt), gold, lanthanides, lutetium, niobium + 1% zirconium metal, platinum, platinum-rhodium alloy, tantalum (metal, alloy, oxide or salt), titanium, uranium powder (depleted), vanadium, and zirconium alloy.

Several metals used in TA-55 processes are identified in 40 CFR Part 261 or in Appendix VIII of that regulation as having hazardous characteristics. The bullets below list the chemical name, its listed EPA HWN, the P/S codes in which the metal is used, and the applicability of the EPA HWNs to the use of these metals in the TA-55 processes:

- Alkaline earth metals (D003) were used in P/S codes AC, AC1 and AC2; it is possible that one or more of these were pyrophoric. However, EPA HWN D003 does not apply to P/S codes AC, AC1, or AC2 because the metals are consumed or oxidized before discarding.

- Arsenic (D004) was used in P/S code PE between 1984 and 1985, and EPA HWN D004 is applicable to P/S code PE during this period.

- Cadmium (D006) applies to a limited number of anode heels produced in P/S codes ER, PX, and SS using cadmium as a solvent.

- Lead (D008) was used in P/S codes DOP, ER, KBTF, PX, and SS~~, and WE~~. For combustible debris waste, EPA HWN D008 is applicable to P/S codes DOP, KBTF, and PX. For P/S codes ER and SS, D008 is only applicable to the metal waste.

acid-based metal cleaner), MolyKote, n-dodecane, Nuetracleaner #1, Nuetracleaner #2, octylphenyl diisobutyl carbamoylmethyl phosphine oxide (CMPO), oil (engine), organic liquid emulsifier, organicstrip, perchlorocarbons, phenolphthalein, phosphate buffer solution, phosphine oxide, phthalate buffer solution, polyethylene glycol, polyoxyethylene-20-sorbitan laurate (surfactant), SF-2I (as coolant), silicon adhesive, silicon defoamer, sugar, surfactants, tetraethylamine hydrochloride, tetraethylamine hydroxide, tetraethylammonium hydroxide, Texaco Regal 32 oil (cutting oil), thionyl chloride, tributyl phosphate (TBP), tributyl phosphate (TBP)/Isopar (isoparaffinic hydrocarbon solvent), tributyl phosphate and iodine in kerosene, trioctylphosphine oxide (TOPO), urea, vactra oil, vacuum grease, vacuum pump oil, WD-40, and Windex.

Several organic chemicals used in TA-55 processes are identified in 40 CFR Part 261 or in Appendix VIII of that regulation as having hazardous characteristics. Table 5 lists these chemicals, their HWNs, P/S codes in which they were used, and the applicability of the HWNs to the use of these chemicals in TA-55 processes.

4.0 DIVISION OF THE WASTE STREAM INTO LOTS

TA-55-19A is a subset (i.e., lot) of waste stream TA-55-19. Waste in this lot, which is expected to consist of only a few drums, is identical to the rest of the waste stream except for the possibility that the drums may contain vanadium pentoxide (EPA HWN P120), which was used only between 02/01/98 and 06/10/98 in two specific P/S codes.

TA-55-19A is not fully defined in the sense that a list of specific waste containers in this lot has not yet been prepared. This is because P/S codes are not always explicitly identified for waste items in TA-55 waste containers. However, the possibility of extracting this information from the waste item identifiers is being evaluated. If successful, this action will permit a listing of waste containers assigned to TA-55-19A.

5.0 CORRELATIONS BETWEEN WASTE STREAMS

Waste Streams TA-55-19 and TA-55-20 have been discussed together in this AK Summary Report. These waste streams are similar in physical form and waste material content. They differ only in that TA-55-19 is assigned EPA HWNs based on P/S code information, whereas TA-55-20 contains non-mixed waste. Other waste streams resulting from the same plutonium processing activities at TA-55 but differing in physical form and waste matrix code are listed in the Sampling Plan.

Organic Chemical and P/S Codes in Which It Was Used	Comments on Applicability of RCRA Codes
Methyl ethyl ketone (P/S codes MA and XO)	• D035 (methyl ethyl ketone) applies to P/S codes MA and XO • F005 applies to P/S codes MA and XO, in which methyl ethyl ketone was used as a solvent (MA) paint stripper (XO).
Pyridine (P/S codes AC and SA)	• D038 (pyridine) applies to P/S codes AC, AC2 and SA • F005 applies to P/S codes AC, AC2 and SA, in which pyridine was used as solvent ~~or~~ stet
Tap Magic (contains 1,1,1 trichloroethane) (P/S code MA)	• F002 does not apply to P/S code MA because Tap Magic is used as a metal cutting fluid or coolant, not as a solvent. Its use was discontinued in 1992.
Tetrachloroethane (not used)	• No RCRA codes apply to tetrachloroethane, an Appendix VIII chemical. Although it is listed on the chemical inventory for metal operations, it was never used in glovebox operations.
Tetrachloroethylene (P/S codes AD, APD, CSE, CV and SE)	• D039 (tetrachloroethylene) applies to P/S codes AD, APD, CSE and SE in which it was used until 1992. • D039 does not apply to P/S code CV because it was used as a coolant outside the glovebox. • F002 applies to P/S codes AD, APD, CSE and SE. Its use as a solvent in P/S code CSE and SE ended in 1992 • F002 does not apply to P/S code CV because it was only used as a coolant outside the glovebox.
Tetrahydrofuran (P/S codes AC, AC2 and SA)	• U213 may possibly apply to P/S codes AC, AC2, and SA. Its applicability is currently under investigation.
Toluene (P/S codes AC, AC2 and SA)	• F005 applies to P/S codes AC, AC2 and SA because toluene was used as a solvent.
Trichloroethylene (P/S codes CK, EL, FF, MA, ME, and XO)	• D040 (trichloroethylene) applies to P/S codes EL, FF, MA, ME, and XO • D040 does not apply to P/S code CK because this chemical was used as a coolant outside the glovebox. • F002 applies to P/S code MA, in which trichloroethylene was used during final cleaning of metal parts from 1979 to 1992, resuming again in February 2000. • F002 does not apply to P/S codes EL or FF, in which it was used as a lubricant for a cutting saw, not as a solvent.

not be assigned to the TA-55-19 and TA-55-20 waste streams because TA-55 waste management personnel did not segregate plastic waste from cellulosic waste.

The following codes also apply to waste streams TA-55-19 and TA-55-20 from the Transuranic Waste Baseline Inventory Report (TWBIR), the TRUPACT II Content Code (TRUCON) (DOE/WIPP-89-004/Rev.13), the Radioactive Solid Waste Disposal (RSWD), and the Item Description Code (IDC) (Sampling Plan).

- TWBIR LA-M16 (TA-55-19) and LA-T16 (TA-55-20)
- TRUCON LA 116A, LA 116B, LA 116C, LA 116D, LA 116E, LA 116F, LA 116H, LA 116I
- RSWD A14, A15, A16, A17, A18, A60
- IDC 004 (combustible waste)

(see section 3.2);

7.0 ASSIGNMENT OF WASTE MATERIAL PARAMETER CODES

The following waste material parameter codes ~~are~~ assigned to waste streams TA-55-19 and TA-55-20 based on (1) waste generation and practices described in the TA-55 Waste Management Procedure s (~~TWCP-351~~); ~~(2) description of past segregation practices (TWCP-701, Section 2.1, page 4 of 43)~~; (~~3~~ 2) TA-55 process AK reports (TWCP-AK-2.1-002; TWCP-AK-2.1-003; TWCP-AK-2.1-004; TWCP-AK-2.1-005; TWCP-AK-2.1-006; and TWCP-AK-2.1-007); and (~~4~~ 3) WIPP-compliant waste characterization data from real-time radiography and visual examination:

- Cellulosics
- Plastics (waste materials)
- Rubber
- Steel (packaging materials)
- Plastics (packaging materials)
- Iron-based metals/alloys (<5% by volume)

8.0 ASSIGNMENT OF EPA HAZARDOUS WASTE NUMBERS

8.1 F, K, P, and U Listings

No K-listings apply to any of the debris waste generated by the P/S codes covered by this report.

The following P/S codes require HWN assignments due to the presence or use of F-listed chemicals. In many cases, the applicability of the HWN is limited to waste generated during a specific period of time, as discussed in the appropriate process AK report.

- AC, AC1, AC2, AC3 F002, F005
- AD F002, F003
- APD F002, F003
- CF F002, F003
- CLS F002, F003
- CSE F002
- CW F002, F003
- ~~CXL F002, F003~~
- DA F002

- HP F002, F003
- MA F001, F002, F005
- SA F002, F003, F005
- SE F002
- WM, X0, XO F001, F002, F005

In addition, debris waste generated under P/S codes SD and SS between 02/01/98 and 06/10/98 ~~are~~ is assigned EPA HWN P120 (vanadium pentoxide).

It is possible that waste generated under P/S codes AC, AC2, and SA may require the assignment of EPA HWN U213 (tetrahydrofuran). This possibility is being investigated.

Because waste items from any of these P/S codes may be present in any given container of combustible debris waste, waste stream TA-55-19 (including lot TA-55-19A) is conservatively assigned the F-listings of F001, F002, F003, and F005. TA-55-19A is segregated for waste with the P-listing of P120. Waste containers assigned to waste stream TA-55-20 only contain items with known P/S codes that do not carry any EPA HWNs.

The reliability of this AK information can be assessed in part based on a review of headspace gas analyses (~~not~~ WIPP-compliant) for 60 containers assigned to waste stream TA-55-19 (Table 6). Measured gas concentrations were above the program required quantitation limit (PRQL) for several regulated volatile organic compounds: acetone, ethyl benzene, methanol, methylene chloride, methyl ethyl ketone, toluene, and xylenes. These results are consistent with the AK information summarized in this waste stream report. June to update #

8.2 Toxicity Listings

Both TA-55-19 and TA-55-19A are conservatively assigned the D-listings of D004, D005, D006, D007, D008, D009, D010, D011, D018, D019, D021, D022, D035, D038, D039, and D040. ~~TA-55-20 has no D listings.~~

make this sentence a stand-alone ¶.

No D-listings are applicable to combustible debris waste generated by the following P/S codes: AC3 (inactive), ACC, AO (Assembly Operation), AO (Americium Processing Calcination), ARI, BA, BAC, BC, BL, BM, BT, CA, CC, CH, CN, CO, COD, CR, CRD, CT, DF, DOP, DP, DT, ELW, EM, EVAC, FA, FC, FSPF, GI, GMS, HC, HG, HRS, ID, IN, ITF, ITF4, JA, LC, LIBS, MAG, MAS, MBC, MF, MO, MOX, MP, MW, NCD, NEPTUNIUM, NR, OB, OM, OR, OY, PA, PAF, PD, PF, PH, PI, PIG, PPD, PR, PS, RAP, RAP2, RB, RBJ, RCM, RD, RFX, RL, RM, RS, SBB, SCB, SMP, SRL, SX, TIGR, UA, UPS, US, US2, VD, VP2, VS, WE,WLT, and ZD.

Based on information in the TA-55 process AK reports, combustible debris waste generated by the following P/S codes are conservatively assigned EPA HWNs due

to the potential presence of D-listed constituents. In many cases, the applicability of the HWN is limited to waste generated during a specific period of time, as discussed in the appropriate process AK report. If a D-listed constituent is known to be present in the waste at some level, the D-code is conservatively assigned unless analytical data confirm that its concentration is below the regulatory level.

TWCP-4722

June to update table

Table 6. Preliminary Headspace Gas Data For 60 Drums Assigned To Waste Stream TA-55-19

ANALYTE	AK information			Preliminary headspace gas analyses for VOCs			
	Chemical used in processes	Chemical present in process feed solution	EPA HWN assignment	MDL (ppmv except for hydrogen and methane)*	Mean concentration is above MDL	PRQL	UCL_{90} analysis indicates presence above PRQL
Acetone	X	X	F003	16.12	4.70 X	100	X
Benzene	X		F005, D018	1.96	X	10	
Bromoform			None apply	2.27		10	
Butanol (n-butyl alcohol)			F003	8.78	X	100	
Carbon Tetrachloride	X	X	D019	2.00	X	10	
Chlorobenzene		X	F002, D021	1.93	X	10	
Chloroform	X	X	D022	1.85	X	10	
Cyclohexane			---	1.88	X	10	
1,1-Dichloroethane			---	1.78		10	
1,2-Dichloroethane			—	2.40		10	
1,1-Dichloroethylene	X		None apply	2.74	X	10	
cis-1,2-Dichloroethene			None apply	2.06	X	10	
Ethyl benzene	See Note		F003	1.72	X	10	X
Ethyl ether	X		F003	1.30	X	10	
Hydrogen			---	0.02 % vol	X	0.1	
Methane	X		---	0.02 % vol	X	0.1	
Methanol	X	X	F003	11.42	X	100	X
Methyl ethyl ketone	X		F005, D035	18.42	X	100	X
Methyl isobutyl ketone			None apply	16.05	X	100	
Methylene chloride	X	X	F002	1.97	X	10	X
1,1,2,2-Tetrachloroethane			None apply	1.63	X	10	
Tetrachloroethene	X	X	F001, F002, D039	1.44	X	10	
Toluene	X		F005	1.67	X	10	X
1,1,2-Trichloro-1,2,2-trifluoroethane (also known as Freon TF and Freon 113)	X		F002	1.79	X	10	

ANALYTE	AK information			Preliminary headspace gas analyses for VOCs			
	Chemical used in processes	Chemical present in process feed solution	EPA HWN assignment	MDL (ppmv except for hydrogen and methane)*	Mean concentration is above MDL	PRQL	UCL_{90} analysis indicates presence above PRQL
1,1,1-Trichloroethane	X		None apply	1.82	X	10	
Trichloroethene	X		F002, D040	1.31	X	10	
1,2,4-Trimethylbenzene			---	2.04	X	10	
1,3,5-Trimethylbenzene			---	2.26	X	10	
Xylene (m and p-xylene)		X	F003	3.62	X	10	X
Xylene (o-xylene)		X	F003	1.9	X	10	X

Abbreviations: AK, acceptable knowledge; HWN, Hazardous Waste Number; MDL, Minimum Detection Limit; PRQL, Program-Required Quantitation Limit; VOC, Volatile Organic Compound

--- This chemical is not regulated under 40 CFR Part 261, Subparts C and D, nor is it listed in Appendix VIII of that regulation.

* These MDL values are from the MDL study dated 6/19/00 (TWCP-3248). Different MDL values would have been in effect at the times that the data included in this table were acquired, so the above MDL values should only be considered as an approximate guide.

NOTE: There is no record documenting the use of ethyl benzene under any of the P/S codes covered by this report. However, recent analyses of some vacuum pump oils from TA-55, PF-4, showed it to be present. Consequently, F003 is applicable to this waste stream. Other constituents on the above table that were identified in these analyses included acetone, benzene, chlorobenzene, 1,2-dichloroethane, tetrachloroethene, toluene, Freon-113, trichloroethene, 1,2,4-trimethylbenzene, 1,3,5-trichlorobenzene, m- and p-xylene, and o-xylene.

AC, ~~AC1~~, ~~AC2~~	D007, D009, D011, D018, D022, D038
AC1	D007, D009, D011, D018, D022
AC2	D007, D009, D011, D018, D022, D038
ACD	D005, D006, D007, D008, D011
ACL	D007, D009
AD	D004, D005, D006, D007, D008, D009, D010, D011, D019, D039
AL	D005, D006, D007, D008, D011
AP	D007, D009
APD	D007, D008, D009, D019, D021, D022, D039
AS	D006, D007, D008, D011
AT	D005, D006, D007, D008, D011
ATL	D005, D006, D007, D008, D011
AX	D007, D009
BF	D006, D007, D008, D011
BU	D006, D007, D008, D011
CD	D006, D007, D008, D009, D011
CF	D007, D008, D009, D011, D019, D021, D022, D039
CK	D005, D006, D007, D008, D009, D011
CL	D007, D008, D009
CLRD	D007, D008, D009
CLS	D007, D008, D009, D019, D021, D022, D039

COL	D005
CPOD	D011
CS	D007, D008, D009
CSE	D007, D008, D009, D039
CV	D005, D006, D007, D008, D009, D011, D019
CW	D007, D008, D009, D011, D019, D021, D022, D039
CX	D007, D008, D009, D011
CXL	D007, D008, D009 ~~D019, D021, D022, D039~~
DO	D007, D011 (no D-listings apply after 1993)
DOP	D008
DS	D006, D007, D008, D009, D011
ED	D005, D006, D007, D008, D011
EDC	D007
EL	D040
EOC	D007, D009
ER	D006, D008
ETD	D005, D006, D007, D008, D011
EV	D006, D007, D008, D009, D011
EXT	D005, D006, D007, D008, D009, D011
FDL	D004, D005, D006, D007, D008, D009, D010, D011
FF	D022, D040
FLU	D004, D005, D006, D007, D008, D009, D010, D011
FX	D006, D007, D008, D009, D011
HCD	D006, D007, D008, D009, D011
HD	D006, D007, D008, D009, D011
HGMS	D006, D007, D008, D009, D011
HP	D007, D008, D009, D011, D019, D021, D022, D039
HRA	D005, D006, D007, D008, D009, D011
IA	D006, D007, D008, D009, D011
IAM	D005, D006, D007, D008, D011
IB	D005, D006, D007, D008, D009, D011
ICP	D007, D009
IE	D005, D006, D007, D008, D009, D011
IS	D005, D006, D007, D008, D011
IX	D006, D007, D008, D009, D011
KBTF	D008
LD	D007, D008, D009
LG1	D006, D008
LG2	D006, D007, D008, D009, D011

STF	D007
TDC	D005, D006, D007, D008, D011
VC	D006, D008
VP1, VP3	D009 (D listing applies only from 09/85 to 10/85)
VU, VUL	D005, D008
XWM, X0, XO	D007, D008, D009, D022, D035, D040 (assigned in order to be conservative; TWCP-AK-2.1-004, R2, Section 3.4.9)
XES	D004, D005, D006, D007, D008, D009, D010, D011
XP	D004, D005, D006, D007, D008, D009, D010, D011

~~(* conservative)~~

8.3 Corrosivity, Reactivity, and Ignitability

TA-55-19 has no listings for corrosivity, reactivity, or ignitability.

TA-55-19A has no listings for corrosivity, reactivity, or ignitability.

TA-55-20 has no listings for corrosivity, reactivity, or ignitability.

See Section ~~10.0~~ 9.0 for a ~~discussion~~ description of the controls in place at TA-55 to ensure the absence of corrosive, reactive or ignitable chemicals in these waste streams. D001 does not apply to wastes in these waste streams despite the use of spent non-halogenated solvents (HWN F003), for the following reasons:

switch order

- Rags that are above the DL for Pu are thermally decomposed, which destroys any organic component.
- Rags that are below the DL for Pu are discarded as combustible debris, but headspace gas analyses support the contention that the solvents are not present in the waste at levels of concern (Table 6). ~~In addition,~~ 100 percent of the drums are subjected to headspace gas analysis, and drums showing over 500 ppm total flammable VOCs are prohibited from being shipped to WIPP. (For comparison, the explosive limit for acetone by itself is 25,000 ppm.)
- Solutions containing spent non-halogenated solvents are sent to the RLWTF if they are below the DL for Pu.
- If above the DL, the solutions are sent to aqueous processes as part of chloride or nitrate operations. Aqueous recovery steps include dissolution of any solid Pu in hydrochloric or nitric acid, followed by Pu recovery by ion exchange. The solutions are then below the DL and are either sent to the RLWTF or to the evaporator.

new (last) bullet Finally,

9.0 VERIFICATION THAT IGNITABLE, REACTIVE, AND CORROSIVE WASTES WERE EXCLUDED

According to the WIPP WAP, "The prohibition of liquids and containerized gases prevents the shipment of corrosive, ignitable, or reactive wastes." Administrative controls on waste packaging were in place at various times to ensure the absence of such items from the waste stream.

- Liquids were prohibited from solid waste streams at TA-55 when the facility opened in January 1978. A waste management procedure written to cover operations at the new facility, *TA-55 Standard Operating Procedure (SOP) 406-GEN-R00*, stated that "Liquids are not permitted in any container of solid waste materials" (TWCP-3943).

- Chemical Waste Disposal Requests (see Attachment 5), introduced in June 1980, included check boxes which the waste generator was required to check if the waste contained corrosive acids or bases, or pyrophoric, flammable, corrosive, explosive, toxic, carcinogenic or highly reactive materials.

- The Certification Plan (TWCP-697) and related Generator Attachments for TA-55 (TWCP-701) were implemented in 1987. Waste generators were required to sign a statement on the WODF (see Attachment 4, pp. 4 and 5) documenting that the waste contained "no free liquids, pyrophorics, explosives, compressed gases, powders or materials other than the indicated matrix." Checkboxes were also present for indicating the presence or absence of corrosive chemicals. Full implementation of this generator statement occurred in May 1987.

- Waste management inspectors perform visual examination of the waste prior to its initial packaging, thus allowing the inspectors to verify the generator's WODF statement (TWCP-701, Sections 3.8.5 to 3.8.6).

- In addition to the above-mentioned prohibitions on explosives in waste, explosives were altogether prohibited from TA-55 until installation of the Impact Test Facility in the early 1990s. In the event of a misfire or unconsumed explosives, a procedure is in place at TA-55 to ensure that explosives do not enter the waste stream (TWCP-xxxx). John to provide

- The Waste Profile Request Form (WPRF), which has been in use at LANL since 1991, includes a statement which must be authenticated by the waste generator, that the waste is not ignitable (flash point >200°F), reactive, or corrosive.

- The TA-55 Generator Attachments to the Certification Plan were updated in 1995 (TWCP-700) but the prohibition on liquids in the waste, and the waste management inspection, remained in effect.

Hence, since the inception of operations at TA-55, corrosive and reactive wastes have been excluded from TA-55 solid wastes through the prohibition of liquids. (The Controls to ensure the exclusion of ignitable constituents are described in Section 8.3.)

The absence of these prohibited items is verified through radiography of each waste container and visual examination of selected containers during TWCP characterization activities. Any free liquids are absorbed onto kitty litter (vermiculite) and discarded in an appropriate waste stream and containerized gases that are found to be present are removed, or the container is tagged as non-compliant by filing a Prohibited Waste Report in accordance with *Nonconformance Reporting and Tracking* (TWCP-QP-1.1-007).

10.0 VERIFICATION THAT INCOMPATIBLE CHEMICALS WERE PROHIBITED

Controls are in place to ensure chemical compatibility for the waste contents and the TRUPACT-II. Section ~~10.0~~ 9.0 summarizes administrative controls in place at TA-55 that prohibit incompatible chemicals in the waste, and measures taken to verify their absence. In addition, all waste containers shipped from TA-55 to TA-54 for storage were evaluated for potentially incompatible chemicals in accordance with 49 CFR Subpart C—Segregation and separation chart of hazardous materials; Section 177.848, Segregation of hazardous materials, and were determined to be in compliance with this requirement.

For waste that has been generated after the implementation of the 1987 Certification Plan, Generator Attachments, waste generators signed a statement on the WODF for each waste items specifying that the waste contained "no free liquids, pyrophorics, explosives, compressed gases, powders or materials other than the indicated matrix." Prior to the installation of the Impact Test Facility in the early 1990s, explosives were prohibited from TA-55. In addition, waste management inspectors performed visual inspection of the waste prior to its initial packaging, thus allowing the inspectors to verify the generator's WODF statement.

A chemical compatibility analysis was performed for TRUCON codes 116/216 (combustible waste) which indicated that all chemicals and the waste matrix were compatible at levels greater than trace amounts (*Content Code Assessments for LANL TRUCON Codes* [DOE/WIPP-89-004]). During the process AK search, additional chemicals were identified and are listed in Section 3.~~3.3~~ 6.3; a new compatibility analysis is underway, but since these additional chemicals are ~~all in~~ only present at trace quantities in the TA-55-19 and TA-55-20 waste streams, no incompatibilities should exist.

11.0 VERIFICATION THAT THERE ARE NO COMPRESSED GASES, FREE LIQUIDS, NONRADIONUCLIDE PYROPHORICS, SEALED CONTAINERS GREATER THAN FOUR LITERS IN VOLUME, OR >1% RADIONUCLIDE PYROPHORICS

Most gases used at the TA-55 Plutonium Facility are stored outside the building and the gas is plumbed into the glovebox from outside the building (TWCP-4164). Occasionally, a lecture bottle may have been used for a process inside the building, but these bottles were kept outside of the glovebox with the gas plumbed into the glovebox. Consequently, compressed gas cylinders or containers are not expected to be in any of the TRU wastes generated by TA-55 operations.

Spray cans, especially WD-40, were in common use in TA-55 gloveboxes until May 1992 (TWCP-4166). These were routinely discarded as metal debris waste. From 1988 until May 1992, the protocol was to vent or puncture the spray cans inside the glovebox; venting was indicated by inserting a metal wire into the valve. After May 1992, spray cans were no longer used in gloveboxes.

Verification that individual waste drums do not contain compressed gases, free liquids, or sealed containers greater than 4 L in volume is obtained from radiography of each waste container and visual examination of selected containers during TWCP characterization activities. Any free liquids are absorbed, and any sealed containers greater than 4 L in volume, or unpunctured or unvented gas containers, are removed; or else the container is tagged as non-compliant by filing a Prohibited Waste Report in accordance with *Nonconformance Reporting and Tracking* (TWCP-QP-1.1-007).

Administrative and procedural controls on the prohibited pyrophorics in TRU waste and the absence of pyrophorics has been verified through testing. For items of pyrochemical salt waste, the procedures of oxygen sparging and/or carbonate oxidation have been used since May 1987 to ensure that pyrophorics were oxidized. In addition, screening tests on similar pyrochemical salts and residues (which contain higher amounts of plutonium) at the RFETS (TWCP-2501) have shown (1) no autoignition, (2) no spontaneous combustion, and (3) no sparking. Experimental results on the reactivity of LANL direct oxide reduction (DOR) salt with water and the reactivity in air of heated calcium metal nodules from DOR salts indicate the absence of "dangerous when wet materials" and pyrophoricity in these salts (TWCP-3730, TWCP-3731, TWCP-3732).

Chemical Waste Disposal Requests dated as early as June 1980 included boxes that were required to be checked if the waste contained pyrophoric, flammable, corrosive, or explosive materials (see Attachment 5, Chemical Waste Disposal Request).

In addition, for wastes generated after the implementation of the 1987 Certification Plan, Generator Attachments, associated waste packaging procedures, and quality assurance systems, the waste generator has signed a statement on the WODF for each waste item stating that waste contains "no free liquids, pyrophorics, explosives, compressed gases, powders or materials other than the indicated matrix." The TA-55 Attachment to the Certification Plan describes how these restrictions were verified by waste management personnel (TWCP-701, Sections 3.8.5-3.8.7).

12.0 VERIFICATION THAT THERE ARE NO POLYCHLORINATED BIPHENYLS (PCBs) IN THE WASTE STREAM

No PCBs were introduced into TA-55 processes as documented in the TA-55 procedures reviewed during this AK search ~~(reports)~~ (TWCP-AK-2.1-002; TWCP-AK-2.1-003; TWCP-AK-2.1-004; TWCP-AK-2.1-005; TWCP-AK-2.1-006; and TWCP-AK-2.1-007) and summarized in the process inputs listed in Tables 1 and 4. Oils used in the reviewed processes include vacuum pump oils, and cutting fluids used for cooling purposes; none

of these oils are known to contain PCBs. All transformers known to contain PCBs have been tracked from the time of startup of TA-55 in 1978. Whenever any transformer oil is drained, it is handled by a subcontractor who is wholly responsible for its disposal (TWCP-AK-2.1-005, R.1, Section 9.0). This oil does not enter the LANL disposal operations.

13.0 DETERMINATION OF THE MAXIMUM NUMBER OF CONFINEMENT LAYERS PERMITTED FOR WASTE PACKAGING

June to add text per AK-VE Reconciliation findings

Waste streams TA-55-19 and TA-55-20 are primarily generated from operations performed in gloveboxes. The waste material is placed directly into bag-out bags (also called inner bags) through an opening in the glovebox where the bag is attached, and the bag is then closed and detached from the glovebox. Waste streams TA-55-19 and TA-55-20 may also be generated from "hot jobs" outside of the glovebox, such as valve changes, or from decontamination of spills or other releases. In these cases, the waste is placed directly into one (or possibly more) inner bags at the work area. The maximum number of confinement layers in any case is six (TWCP-816).

A minor source of waste streams TA-55-19 and TA-55-20 is room trash that was originally considered to be low-level waste, which is collected in plastic bags inside cardboard boxes. Occasionally, when assayed, these boxes are determined to be TRU waste. These boxes may be sorted to remove the "hot" item, or the whole box may be bagged and sent to the TRU packaging area for placement in drums containing waste streams TA-55-19 or TA-55-20, as appropriate. When this occurs, the P/S code WM is assigned to the waste. Due to the additional layers of plastic that are present when this operation occurs, drums with the P/S code WM are assumed to contain up to two more layers of internal packaging than other drums.

Waste drum packaging procedures for waste streams TA-55-19 and TA-55-20 have gone through several changes since the beginning of operations at TA-55. TRUCON Code assignments made by the waste generator are compiled in the Sampling Plan. However, in the absence of this information, TRUCON Codes will be assigned to the waste container in accordance with the default packaging configurations and associated TRUCON codes shown in Table 7, that reflect the packaging protocols in effect during different periods of time at TA-55 (TWCP-816).

Table 7. Maximum Layers of Confinement for be Used for TA-55-19 and TA-55-20 Waste Containers in the Absence of More Specific Waste Characterization Data

Time Frame	P/S Code	Layers of Confinement*	TRUCON Code

01/78–05/87	all	Maximum of 6 layers: • up to 4 inner bags • up to 2 liner bags • all bag closures by either twist & tie; or twist, tie & tape	LA 116 I
05/87–01/97	all except WM, XO	Maximum of 4 layers: • up to 2 inner bags • 2 liner bags • bag closures by either twist & tie; twist, tie & tape, folded and taped, or folded	LA 116 A
05/87–present	WM, XO	Maximum of 6 layers: • up to 4 inner bags • 2 liner bags • bag closures by either twist & tie; twist, tie & tape, folded and taped, or folded	LA 116 I
01/97–present	all except WM, XO	Maximum of 1 layer: • 1 carbon-filter vented inner bag (if initial bag is breached, bag is placed in second bag and first bag is slit open), closed by either twist & tie; or twist, tie & tape • 2 liner bags, folded, no closure	LA 116 E

* Layers of confinement for these TRUCON Codes are defined in DOE/WIPP-89-004

June to Check — FT are closed or not?

June to insert new section on AK confirmation

Add to P/S code list Hanford wastes — HRA

only if we have info. on the processes

Insert info. about high-density plastic from Ce operations (see email) DONE

TA-55 PLUTONIUM FACILITY
ACCEPTABLE KNOWLEDGE REPORT

REPORT TITLE: Acceptable Knowledge Summary Report for Waste Streams TA-55-19 and TA-55-20

Edit round #1 jtm

REPORT NUMBER: TWCP-AK-2.1-008,R.1 (LA-UR-00-5727)

WASTE GENERATED FROM WASTE STREAMS: TA-55-19 and TA-55-20

Update to new QP-21 (get from Jim Bailey)

What about leaded gloves prior to 1987?

EFFECTIVE DATE: 12/04/00

NEXT REVIEW DATE: 12/04/02

DOCUMENT PREPARER:

John Musgrave — NAME — 12/04/00 DATE

APPROVALS:

June Fabryka-Martin — INDEPENDENT TECHNICAL REVIEWER/EDITOR — 12/04/00 DATE

Pamela Rogers — SITE PROJECT MANAGER — 12/04/00 DATE

Wesley G. Estill — WASTE CERTIFICATION OFFICIAL — 12/04/00 DATE

M A Gavett — SITE PROJECT QA OFFICER — 12/04/00 DATE

Charles L. Foxx — FACILITY REPRESENTATIVE — 12/04/00 DATE

Checked against edit round #5 jtm 11/8/01

© 2000 University of California

ACRONYMS

AK	acceptable knowledge
ARIES	Advanced Recovery and Integrated Extraction System
CFR	*Code of Federal Regulations*
CMPO	octylphenyldiisobutylcarbamoylmethylphosphine oxide
DCHP	dicesium hexachloroplutonate
DHDCMP	dihexyl N,N-diethylcarbamoylmethyl phosphonate
DL	discard limit
DOE	U.S. Department of Energy
DOR	direct oxide reduction
DWLS	Discardable Waste Log Sheet
EPA	U.S. Environmental Protection Agency
F	RCRA hazardous waste code for hazardous wastes from non-specific sources, defined in 40 CFR Subpart D, Section 261.31
FOOF	oxygen fluoride
HEPA	high-efficiency particulate air
HWN	hazardous waste number
ID	item identification
IDC	item description code
K	RCRA hazardous waste code for hazardous wastes from specific sources, defined in 40 CFR Subpart D, Section 261.32
LANL	Los Alamos National Laboratory
LLW	low-level waste
MCDOR	multicycle direct oxide reduction
MT	material type
NMT	Nuclear Material Technology
P	RCRA hazardous waste code for acute hazardous waste defined in 40 CFR Subpart D, Section 261.33
PCB	polychlorinated biphenyl
PRQL	program required quantitation limit
P/S	process/status [code]
QA	quality assurance
R&D	research and development
RD&D	research, development, and demonstration
RCRA	Resource Conservation and Recovery Act
RLWTF	Radioactive Liquid Waste Treatment Facility
RMDC	Records Management/Document Control
RSWD	radioactive solid waste disposal
Sampling Plan	*Los Alamos National Laboratory Transuranic Waste Characterization Sampling Plan* (TWCP-PLAN-0.2.7-001,R.3)
SME	subject matter expert
SOP	safe operating procedure
TA	technical area
TBP	tributyl phosphate

PROCESS/STATUS CODE INDEX

P/S Code	P/S Name	AK Process Report and Primary Report Section in which P/S Code is Described*		RCRA Listings for Combustible Debris
AC ✓	Actinide chemistry, R&D	Miscellaneous Operations	3.4.3, Att. 4	D007, D009, D011, D018, D022, F002, F005, U213
ACI	Actinide chemistry, R&D	Miscellaneous Operations	3.4.3, Att. 4	D007, D009, D011, D018, D022, F002, F005
AC2	Actinide chemistry, R&D	Miscellaneous Operations	3.4.3, Att. 4	D007, D009, D011, D018, D022, F002, F005, U213
AC3	Actinide chemistry, R&D	Miscellaneous Operations	3.4.3, Att. 4	
ACC	Ammonium chloride conversion	Special Processing	3.4.8, Att. 4	
ACD	Cascade dissolver	Special Processing	3.4.1, Att. 4	D005, D006, D007, D008, D011
ACL	Analytical chemistry laboratory	Miscellaneous Operations	3.4.4, Att. 4	D007, D009
AD	Actinide processing demonstration	Miscellaneous Operations	3.4.1, Att. 4	D004, D005, D006, D007, D008, D009, D010, D011, D019, D039, F002, F003
AL	Ash leach	Nitrate Operations	3.4.2, Att. 4	D005, D006, D007, D008, D011
AO	Assembly operation	Metal Operation Processes	3.4.3, Att. 4	
AO	Americium processing calcination	Nitrate Operations	3.4.3, 3.4.6, Att. 4	
AP	Americium purification	Nitrate Operations	3.4.3, 3.4.6, Att. 4	D007, D009
APD ✓	Actinide processing demonstration	Miscellaneous Operations	3.4.7, Att. 4	D007, D008, D009, D019, D021, D022, D039, F002, F003
ARI	ARIES	Metal Operation Processes	3.4.3, Att. 4	
AS	Anode heel dissolution	Nitrate Operations	3.4.2, 3.4.6, Att. 4	D006, D007, D008, D011
AT	Ash testing	Nitrate Operations	3.4.2, Att. 4	D005, D006, D007, D008, D011
ATL	Advanced test line for actinide separation RD&D	Nitrate Operations	3.4.2, Att. 4	D005, D006, D007, D008, D011
AX	Solution assay	Miscellaneous Operations	3.4.3, Att. 4	D007, D009
BA	Basement isopress	Metal Operation Processes	3.4.2, Att. 4	
BAC	Bacterial decomposition of cellulose items	Nitrate Operations	3.4.2, 3.4.6, Att. 4	
BC	Physical properties	Metal Operation Processes	3.4.2, Att. 4	
BF	Unknown name for P/S code	Nitrate Operations	3.4.6, Att. 4	D006, D007, D008, D011

P/S Code	P/S Name	AK Process Report and Primary Report Section in which P/S Code is Described*		RCRA Listings for Combustible Debris
BL	Blending	Nitrate Operations	3.4.1, 3.4.6, Att. 4	
BM	Burning metal	Nitrate Operations	3.4.1, Att. 4	
BT	Burst testing	Metal Operation Processes	3.4.3, Att. 4	~~D008~~ No
BU	Button burning	Nitrate Operations	3.4.1, 3.4.6, Att. 4	D006, D007, D008, D011
CA	Casting	Metal Operation Processes	3.4.2, Att. 4	
CC	Calcination	Nitrate Operations	3.4.3, 3.4.6, Att. 4	
CD	Hydroxide cake dissolution	Nitrate Operations	3.4.2, Att. 4	D006, D007, D008, D009, D011
CF	Cement fixation	Nitrate Operations	3.4.5, Att. 4	D007, D008, D009, D011, D019, D021, D022, D039, F002, F003
CH	Characterization	Nitrate Operations	3.4.3, 3.4.6, Att. 4	
CK	RD&D volatile fluoride Pu recovery	Miscellaneous Operations	3.4.2, Att. 4	D005, D006, D007, D008, D009, D011
CL	Crucible processing	Chloride Operations	3.4.2, 3.4.3, Att. 4	D007, D008, D009
CLRD	Aqueous chloride R&D	Chloride Operations	3.4.2, Att. 4	D007, D008, D009
CLS	Accountable CLS chloride solutions	Chloride Operations	3.4.2, 3.4.3, 3.4.4, Att. 4	D007, D008, D009, D019, D021, D022, D039, F002, F003
CN	C-N-O analysis	Metal Operation Processes	3.4.1, Att. 4	
CO	Comminution	Metal Operation Processes	3.4.1, Att. 4	
COD	Chlorinated oxide dissolution	Nitrate Operations	3.4.2, 3.4.6, Att. 4	
COL	Chlorinated oxide leach	Nitrate Operations	3.4.2, 3.4.6, Att. 4	D005
CPOD	Catalyzed electrochemical plutonium oxide dissolver	Nitrate Operations	3.4.2, Att. 4	D011
CR	Crushing and pulverizing	Nitrate Operations	3.4.1, Att. 4	
CRD	Chlorination/reduction RD&D	Pyrochemical Processes	3.4, Att. 4	
CS	Chloride solutions	Chloride Operations	3.4.3, Att. 4	D007, D008, D009
CSE	Chloride solvent extraction	Chloride Operations	3.4.3, Att. 4	D007, D008, D009, D039, F002
CT	Compatibility testing	Metal Operation Processes	3.4.1, Att. 4	
CV	RD&D experimental chlorination processes	Miscellaneous Operations	3.4.2, Att. 4	D005, D006, D007, D008, D009, D011, D019, ~~D039~~
CW	Caustic waste	Chloride Operations	3.4.4, Att. 4	D007, D008, D009, D011, D019, D021, D022, D039, F002, F003

P/S Code	P/S Name	AK Process Report and Primary Report Section in which P/S Code is Described*		RCRA Listings for Combustible Debris
CX	Chloride anion exchange	Chloride Operations	3.4.2, 3.4.3, 3.4.4, Att. 4	D007, D008, D009, D011
CXL	Experimental chloride extraction line	Chloride Operations	3.4.2, 3.4.3, Att. 4	D007, D008, D009, ~~D019, D021, D022, D039, D042, F003~~
DA	Alloy development Pu items	Metal Operation Processes	3.4.2, Att. 4	F002
DF	DS furnace and oxide preparation	Nitrate Operations	3.4.3, 3.4.6, Att. 4	
DO	Dissolution of oxide	Special Processing	3.4.3, 3.4.5, 3,4,7, Att. 4	D007, D011
DOP	Detector oxide preparation	Metal Operation Processes	3.4.2, Att. 4	D008
DP	Dry processing	Nitrate Operations	3.4.1, 3.4.6, Att. 4	
DS	Ion exchange	Nitrate Operations	3.4.3, Att. 4	D006, D007, D008, D009, D011
DT	John Ward R&D	Metal Operation Processes	3.4.2, Att. 4	
ED	Cascade dissolver	Nitrate Operations	3.4.2, Att. 4	D005, D006, D007, D008, D011
EDC	Electrolytic decontamination	Miscellaneous Operations	3.4.8, Att. 4	D007, ~~D008~~
EL	Element loading	Metal Operation Processes	3.4.1, Att. 4	D040
ELW	Experimental laser welding	Metal Operation Processes	3.4.3, Att. 4	
EM	Electron microscopy	Metal Operation Processes	3.4.2, Att. 4	
EOC	Experimental oxide characterization	Miscellaneous Operations	3.4.5, Att. 4	D007, D009
ER	Electrorefining	Pyrochemical Processes	3.4.4, Att. 4	D006, D008
ETD	Experimental thermal decomposition	Nitrate Operations	3.4.1, 3.4.6, Att. 4	D005, D006, D007, D008, D011
EV	Evaporator	Nitrate Operations	3.4.4, Att. 4	D006, D007, D008, D009, D011
EVAC	Evacuation and bake out	Metal Operation Processes	3.4.3, Att. 4	
EXT	Extraction RD&D	Miscellaneous Operations	3.4.6, Att. 4	D005, D006, D007, D008, D009, D011
FA	Americium processing	Nitrate Operations	3.4.3, 3.4.6, Att. 4	
FC	Canning	Nitrate Operations	3.4.3, 3.4.6, Att. 4	
FDL	FOOF demonstration loop	Miscellaneous Operations	3.4.2, Att. 4	D005, D006, ~~D007~~, D008, D009, ~~D011~~ D004, D010
FF	Fuel fabrication	Metal Operation Processes	3.4.1, Att. 4	D022, D040
FLU	Fluorination RD&D	Miscellaneous Operations	3.4.2, Att. 4	D005, ~~D006, D007~~, D008, ~~D009, D011~~ D004, D010
FSPF	Special furnace operations	Metal Operation Processes	3.4.3, Att. 4	
FX	Cement to drum	Nitrate Operations	3.4.6, Att. 4	D006, D007, D008, D009, D011
GI	Pellet grinding & inspection	Metal Operation Processes	3.4.1, Att. 4	

P/S Code	P/S Name	AK Process Report and Primary Report Section in which P/S Code is Described*		RCRA Listings for Combustible Debris
GMS	Open gradient magnetic separation	Nitrate Operations	3.4.1, Att. 4	
HC	Calcination	Nitrate Operations	3.4.3, 3.4.6, Att. 4	
HCD	Hydroxide cake dissolution	Nitrate Operations	3.4.2, Att. 4	D006, D007, D008, D009, D011
HD	Hydroxide cake dissolution	Nitrate Operations	3.4.2, Att. 4	D006, D007, D008, D009, D011
HG	Pu removal by mercury	Metal Operation Processes	3.4.2, Att. 4	
HGMS	High gradient magnetic separation	Nitrate Operations	3.4.1, 3.4.6, Att. 4	D006, D007, D008, D009, D011
HP	Cement fixation	Nitrate Operations	3.4.5, Att. 4	D007, D008, D009, D011, D019, D021, D022, D039, F002, F003
HRS	High resolution spectroscopy	Miscellaneous Operations	3.4.5, Att. 4	
IA	Impure americium holding for discard	Nitrate Operations	3.4.5, 3.4.6, Att. 4	D006, D007, D008, D009, D011
IAM	Inspection and measurement	Special Processing	3.4.1, Att. 4	D005, D006, D007, D008, D011
IB	Matrix study of pyrochemical salts	Miscellaneous Operations	3.4.6, Att. 4	D005, D006, D007, D008, D009, D011
ICP	ICP-AES analysis	Miscellaneous Operations	3.4.4, Att. 4	D007, D009
ID	Immersion density	Metal Operation Processes	3.4.1, Att. 4	
IE	Isotope enrichment	Miscellaneous Operations	3.4.2, Att. 4	D005, D006, D007, D008, D009, D011
IN	Inspection	Metal Operation Processes	3.4.2, Att. 4	
IS	Incinerator	Nitrate Operations	3.4.1, Att. 4	D005, D006, D007, D008, D011
ITF	Impact test facility	Metal Operation Processes	3.4.2, Att. 4	
ITF4	Impact test facility	Metal Operation Processes	3.4.2, Att. 4	
IX	Ion exchange	Special Processing	3.4.2, Att. 4	D006, D007, D008, D009, D011
JA	Gas isostatic press	Metal Operation Processes	3.4.2, Att. 4	
KBTF	Kolsky bar test facility	Metal Operation Processes	3.4.3, Att. 4	D008
LC	Uranium plutonium processing	Nitrate Operations	3.4.2, 3.4.6, Att. 4	
LD	Chloride leach & dissolution	Chloride Operations	3.4.2, Att. 4	D007, D008, D009
LG1	Non combustible leach	Nitrate Operations	3.4.2, 3.4.6, Att. 4	D006, D008
LG2	Hydroxide cake dissolution	Nitrate Operations	3.4.2, 3.4.6, Att. 4	D006, D007, D008, D009, D011
LI	XF6 experimental measurements	Miscellaneous Operations	3.4.2, Att. 4	D005, D006, D007, D008, D009, D011

HRA?

ITF

P/S Code	P/S Name	AK Process Report and Primary Report Section in which P/S Code is Described*		RCRA Listings for Combustible Debris
LIBS	Laser-induced breakdown spectroscopy system	Miscellaneous Operations	3.4.5, Att. 4	
LR	Ion exchange	Nitrate Operations	3.4.3, Att. 4	D006, D007, D008, D009, D011
MA	Machining	Metal Operation Processes	3.4.2, Att. 4	D035, D040, F002, F005 F001
MAG	Magnetic separation	Nitrate Operations	3.4.1, Att. 4	
MAS	RD&D experimental processes	Nitrate Operations	3.4.1, Att. 4	
MB	Nitric dissolution of molten salts	Chloride Operations Nitrate Operations	3.4.2, Att. 4 3.4.2, 3.4.6, Att. 4	~~D005,~~ D007, D008, D009
MBC	Crystal	Metal Operation Processes	3.4.3, Att. 4	
ME	Metallography	Miscellaneous Operations	3.4.10, Att. 4	D007, D040, F003
MELL	Mediated electro-oxidation of LLW	Nitrate Operations	3.4.2, Att. 4	D006, D007, D008, D009, D011
MF	Metals furnace	Nitrate Operations	3.4.1, 3.4.6, Att. 4	
ML	Non-Pu metal leach	Nitrate Operations	3.4.2, Att. 4	D006, D008
MO	Metal oxidation, room 429	Pyrochemical Processes	3.4.9, Att. 4	
MOX	Mixed oxide fuel production	Metal Operation Processes	3.4.1, Att. 4	
MP	Metal preparation	Pyrochemical Processes	3.4.1, Att. 4	
MPD	Cascade dissolver	Nitrate Operations	3.4.2, Att. 4	D005, D006, D007, D008, D011
MS	Molten salts purification dissolution	Chloride Operations	3.4.2, Att. 4	D007, D008, D009
MW	Metal working	Metal Operation Processes	3.4.2, Att. 4	
NC	Noncombustible leach	Nitrate Operations	3.4.2, Att. 4	D006, D008
NCD	Nonconfirming drums	Miscellaneous Operations	3.4.9, Att. 4	
NEPTUNIUM	Neptunium	Pyrochemical Processes	3.4.10, Att. 4	
NL	Noncombustible leach	Nitrate Operations	3.4.2, 3.4.6, Att. 4	D006, D008
NR	Nitrate recovery	Nitrate Operations	3.4.2, 3.4.6, Att. 4	
OB	Oxide blending	Metal Operation Processes	3.4.1, Att. 4	
OD	Oxide dissolution	Nitrate Operations	3.4.2, Att. 4	D006, D007, D008
OH	Hydroxide precipitation	Nitrate Operations	3.4.1, 3.4.3, Att. 4	D006, D007, D008, D009, D011
OM	Oxygen to metal ratio determination	Metal Operation Processes	3.4.1, Att. 4	
OR	Direct oxide reduction	Pyrochemical Processes	3.4.2, Att. 4	
OY	Oxalate precipitation	Nitrate Operations	3.4.1, 3.4.3, Att. 4	
PA	Passivation	Nitrate Operations	3.4.1, 3.4.6, Att. 4	

P/S Code	P/S Name	AK Process Report and Primary Report Section in which P/S Code is Described*		RCRA Listings for Combustible Debris
PAF	Passivation furnaces	Nitrate Operations	3.4.1, Att. 4	
PB	Pu-beryllium source recovery	Chloride Operations	3.4.1, Att. 4	D007, D008, D009
PCH	Plasma chemistry	Metal Operation Processes	3.4.2, Att. 4	D007
PD	Pit disassembly	Metal Operation Processes	3.4.2, Att. 4	
PE	Sputtering process	Metal Operation Processes	3.4.2, Att. 4	D004
PF	Plutonium surfaces	Metal Operation Processes	3.4.2, Att. 4	
PH	Thermal hydride/dehydride	Metal Operation Processes	3.4.2, Att. 4	
PI	Preparation of isotopes	Special Processing	3.4.4, Att. 4	
PIG	Welding	Metal Operation Processes	3.4.3, Att. 4	
PK	Pickling and nitrate holding	Pyrochemical Processes	3.4.11, Att. 4	D006, D007, D008, D011
POSM	Processing out-of-specification material	Special Processing	3.4.3, Att. 4	D007, D011
PPD	Pu pellet dissolution	Special Processing	3.4.11, Att. 4	
PR	Peroxide precipitation	Nitrate Operations	3.4.3, Att. 4	
PRR	Pyrochemical residue recovery	Chloride Operations	3.4.3, 3.4.4, Att. 4	D007, D009
PS	Peroxide precipitation of MSE salts	Nitrate Operations	3.4.2, 3.4.6, Att. 4	
PT	Plutonium-thorium separation	Nitrate Operations	3.4.2, 3.4.6, Att. 4	D007
PTP	Plutonium trichloride preparation	Pyrochemical Processes	3.4.12, Att. 4	D019
PTS	RD&D pretreatment study	Nitrate Operations	3.4.1, 3.4.6, Att. 4	D005, D006, D007, D008, D011
PUB	Pu/Be source recovery	Chloride Operations	3.4.1, Att. 4	D007, D008, D009
PX	Multiple DOR with in situ regeneration and electrorefining	Special Processing	3.4.6, 3.4.7, 3.4.8, 3.4.9, 3.4.10, Att. 4	D006, D008, D019
RA	Recovery of anodes	Pyrochemical Processes	3.4.6, Att. 4	D005
RAP	Research alloy preparation	Metal Operation Processes	3.4.3, Att. 4	
RAP2	Research alloy preparation	Metal Operation Processes	3.4.3, Att. 4	
RASS/RSS	Raman spectroscopy system	Miscellaneous Operations	3.4.5, Att. 4	D004, D005, D006, D007, D008, D009, D010, D011, D019
RB	Roasting and blending	Nitrate Operations	3.4.3, Att. 4	
RBJ	Roasting and blending Jr	Nitrate Operations	3.4.3, Att. 4	
RC	Rotary calciner	Nitrate Operations	3.4.1, 3.4.6, Att. 4	D005, D006, D007, D008, D011
RCM	Rich column material ion exchange	Nitrate Operations	3.4.3, Att. 4	

Rename "Pyrochemical R&D"

P/S Code	P/S Name	AK Process Report and Primary Report Section in which P/S Code is Described*		RCRA Listings for Combustible Debris
RD	Repackaging into retrievable drums	Miscellaneous Operations	3.4.9, Att. 4	
RFX	Ion exchange	Nitrate Operations	3.4.3, Att. 4	
RL	Radiochemical coating	Metal Operation Processes	3.4.2, Att. 4	
RM	Reduction to metal	Special Processing	3.4.4, 3.4.6, 3.4.7, 3.4.8, 3.4.9, Att. 4	
RO	Oil recovery	Nitrate Operations	3.4.1, 3.4.6, Att. 4	D006, D008, D040
RR	Ion exchange	Nitrate Operations	3.4.3, Att. 4	D006, D007, D008, D009, D011
RS	Pellet sintering	Metal Operation Processes	3.4.1, Att. 4	
SA	Super acid RD&D	Miscellaneous Operations	3.4.3, Att. 4 ~~D038~~	D007, D009, D018, D038, F002, F003, F005 U213
SB	Scrap burning	Special Processing	3.4.1, Att. 4	D005, D006, D007, D008, D011
SBB	Ca/Al scrubbing RD&D	Special Processing	3.4.9, Att. 4	
SC	Cascade dissolver, G437	Nitrate Operations	3.4.2, Att. 4	D005, D006, D007, D008, D011
SCB	Chlorination Ca/Al scrubbing RD&D	Pyrochemical Processes	3.4.2, Att. 4	
SD	Salt distillation	Pyrochemical Processes	3.4.5, Att. 4	P120
SE	Solvent extraction	Chloride Operations	3.4.3, Att. 4	D007, D008, D009, D039, F002
SL	Scrap leaching	Special Processing	3.4.1, Att. 4	D005, D006, D007, D008, D011
SMP	SP mounting preparation	Miscellaneous Operations	3.4.5, Att. 4	
SO	Super oxidizer, FOOF program	Miscellaneous Operations	3.4.2, Att. 4	D004, D005, D006, D007, D008, D009, D010, D011
SP	Scrap dissolution, G438	Nitrate Operations	3.4.2, Att. 4	D007
SRL	Special recovery line	Metal Operation Processes	3.4.2, Att. 4	
SS	Salt stripping	Pyrochemical Processes	3.4.3, 3.4.4, 3.4.5, 3.4.7, 3.4.8, Att. 4	D006, D008, P120
SSD	Special scrap dissolution	Nitrate Operations	3.4.2, 3.4.6, Att. 4	D006, D007, D008
SSMD	SS material development	Pyrochemical Processes	3.4, Att. 4	D009
STF	Standard fabrication	Miscellaneous Operations	3.4.6, Att. 4	D007
SX	Americium processing silicon removal	Nitrate Operations	3.4.3, 3.4.6, Att. 4	
TDC	Thermal decomposition of cellulose items	Nitrate Operations	3.4.1, Att. 4	D005, D006, D007, D008, D011
TIGR	Thermally induced gallium removal	Metal Operation Processes	3.4.3, Att. 4	

P/S Code	P/S Name	AK Process Report and Primary Report Section in which P/S Code is Described*		RCRA Listings for Combustible Debris
UA	Uranium fabrication	Metal Operation Processes	3.4.2, Att. 4	
UPS	Uranium/plutonium separation	Nitrate Operations	3.4.2, Att. 4	
US	Uranium separation for solid solution feed	Nitrate Operations	3.4.2, 3.4.6, Att. 4	
US2	Uranium separation for non-solid solutions feed	Nitrate Operations	3.4.2, 3.4.6, Att. 4	
VC	Variable CSMO scrap dissolution	Nitrate Operations	3.4.2, 3.4.6, Att. 4	D006, D008
VD	Vapor degreaser and sand blasting	Metal Operation Processes	3.4.2, Att. 4	
VP1	CSMO scrap dissolution	Nitrate Operations	3.4.2, 3.4.6, Att. 4	D009
VP2	Polycube processing	Nitrate Operations	3.4.1, 3.4.6, Att. 4	
VP3	Hydroxide precipitation	Nitrate Operations	3.4.3, 3.4.6, Att. 4	D011 ~~D009~~ ? — stet
VS	Confirmation, inspection & sampling	Miscellaneous Operations	3.4.5, Att. 4	
VU	Vessel unloading	Special Processing	Att. 4	D005, D008
VUL	Vessel unloading	Nitrate Operations	3.4.1, Att. 4	D005, D008
WE	Welding	Metal Operation Processes	3.4.2, Att. 4	D008 ? — Fcxx
WLT	Welding leak test	Metal Operation Processes	3.4.3, Att. 4	
WM	Waste management	Miscellaneous Operations	3.4.9, Att. 4	D007, D008, ~~D009~~, D022, D035, D040, F001, F002, ~~F005~~
X0	Inactive or unspecified P/S material	Miscellaneous Operations	3.4.9, Att. 4	D007, D008, ~~D009~~, D022, D035, D040, F001, F002, ~~F005~~
XES	X-ray energy spectroscopy	Miscellaneous Operations	3.4.5, Att. 4	D004, D005, D006, D007, D008, D009, D010, D011
XO	Inactive or unspecified P/S material	Miscellaneous Operations	3.4.9, Att. 4	D007, D008, D009, D022, D035, D040, F001, F002, F005
XP	RD&D experimental processes	Miscellaneous Operations	3.4.4, Att. 4	D004, D005, D006, D007, D008, D009, D010, D011
ZD	Scrap oxide dissolution	Nitrate Operations	3.4.2, 3.4.6, Att. 4	

* Process AK summary reports: Chloride Operations (TWCP-AK-2.1-002, R.1), Metal Operation Processes (TWCP-AK-2.1-003, R.1), Miscellaneous Operations (TWCP-AK-2.1-004, R.1), Nitrate Operations (TWCP-AK-2.1-005, R.1), Pyrochemical Processes (TWCP-AK-2.1-006, R.1), and Special Processing (TWCP-AK-2.1-007, R.1)

ACCEPTABLE KNOWLEDGE SUMMARY

FOR TA-55-19 & 20

Waste Stream Number and Title:	TA-55-19, Mixed Combustible Debris Waste TA-55-20, Non-mixed Combustible Debris Waste
Waste Matrix Code and Description:	S5000 S5300
TRUCON Codes:	LA116A, LA116B, LA116C, LA116D, LA116E, LA116F, LA116H, LA116I
Maximum Layers of Packaging:	6
Site:	LANL
Waste-Generating Facility:	TA-55, Plutonium Facility (building PF-4), all wings
Time Period of Generation:	TA-55-19: 1978—present; TA-55-20: 1979—present
Defense Waste Status:	Defense-related TRU waste. There is no historical record or evidence of spent nuclear fuel or high-level waste ever having been handled at the facility.
Waste Stream Volume (as stored):	TA-55-19: 4173 containers (873 m^3) TA-55-20: 281 containers (59 m^3)
Waste Stream Volume (after repackaging):	TA-55-19: 850 SWBs, 3873 drums (2390 m^3) TA-55-20: not available

Waste Material Parameter List (including packaging)

Waste materials: cellulosics, rubber, plastics; iron-based metals and alloys (<5% by volume)
Packaging materials: steel, plastics

Waste Stream Description

The combustible debris waste stream includes rubber, plastic-based, and cellulose-based waste generated at the facility. Plastic-based waste includes, but may not be limited to, polyethylene and vinyl tape; gloves; plastic vials; polystyrene; Tygon tubing; polyvinyl chloride plastic; Teflon products; Plexiglas; and dry box gloves (unleaded neoprene base). Cellulose-based waste includes, but may not be limited to, rags, wood, paper, and cardboard; laboratory coats and coveralls; booties and cotton gloves, and similar materials. The waste may also contain a small fraction (less than 5 percent) of non-combustible solids (e.g., scrap metal, metal lids, zippers, discarded tools).

Waste Generating Processes

Plutonium manufacturing, recovery, and research operations at the TA-55 Plutonium Facility, as well as associated maintenance operations, generate transuranic wastes. These operations include:

- Preparation of ultra-pure plutonium metals, alloys, and compounds
- Preparation of specific alloys, including casting and machining these materials into specific shapes
- Determination of the high-temperature thermodynamic properties of plutonium
- Reclamation of plutonium from scrap and residues produced by numerous feed sources
- Disassembly of components for inspection and analysis
- Manufacturing of parts on a limited basis

RCRA Characterization:

TA-55-19 is conservatively assigned the following EPA Hazardous Waste Numbers (HWN). Many of the HWNs are time-dependent, and apply only to containers generated by a particular process over a specific period of time, as documented in process AK reports.

- F001, F002, F003 and F005
- D004, D005, D006, D007, D008, D009, D010, D011, D018, D019, D021, D022, D035, D038, D039, D040
- P120 (applies only to waste stream TA-55-19A)

No HWNs apply to containers in waste stream TA-55-20.

Radionuclide Content

These waste streams predominantly contain a variety of plutonium material types with different well-defined isotopic compositions. Americium-241, neptunium-237, and uranium-234 may be present at detectable concentrations as decay products of their plutonium precursors. Some of the processes separate plutonium from americium and uranium. The waste will usually be enriched in americium and uranium relative to plutonium, but may also be depleted in some cases. Some waste may contain uranium from one of several uranium material types. Other waste may contain various radionuclides used as radioassay sources, including americium-241, americium-243, cerium-144, curium-244, protactinium-231, neptunium-237, thorium-232, thorium-232 enriched in thorium-230, uranium-233, and depleted uranium.

Primary References for Documentation of Acceptable Knowledge

Process Acceptable Knowledge Summary Report for Chloride Operations at TA-55 (TWCP-AK-2.1-002, ~~R1~~)

ACCEPTABLE KNOWLEDGE SUMMARY REPORT FOR WASTE STREAMS TA-55-19 AND TA-55-20

1.0 INTRODUCTION

All transuranic (TRU) waste must be sufficiently characterized and certified before it is shipped to the Waste Isolation Pilot Plant (WIPP). The U.S. Environmental Protection Agency (EPA) allows use of acceptable knowledge (AK) for waste characterization, and defines AK in its guidance document, *Waste Analysis at Facilities that Generate, Treat, Store and Dispose of Hazardous Waste*. Attachment B, Waste Analysis Plan, to the *Hazardous Waste Facility Permit Issued to the Waste Isolation Pilot Plant* (EPA No. NM4890139088) (WIPP WAP) defines AK information and provides guidelines on how AK should be obtained and documented.

This AK summary report was prepared in accordance with *Acceptable Knowledge Documentation* (TWCP-QP-1.1-021,R.5). The primary purpose of this report is to systematically organize, evaluate, and summarize AK information about characteristics of the wastes generated by the Plutonium Facility at Technical Area (TA) 55, one of the TRU-waste generators at Los Alamos National Laboratory (LANL). By doing so, this report provides technical support for assignment of specific waste containers to the waste stream.

2.0 METHODOLOGY USED TO SEARCH FOR AK RECORDS

The AK search for the information related to waste streams TA-55-19 and -20 covered:

- Review of the *Los Alamos National Laboratory Transuranic Waste Characterization Sampling Plan* (TWCP-PLAN-0.2.7-001,R.3) (Sampling Plan) that includes information regarding all waste streams, including TA-55-19 and TA-55-20.
- Review of documents related to the waste generation and waste management activities at TA-55 as documented in the Acceptable Knowledge Roadmap (Attachment 1),
- Interviews with personnel involved with waste generation and waste management at TA-55 as documented in the Acceptable Knowledge Roadmap (Attachment 1), and
- Review of process AK reports for TA-55 processes (as discussed below), and
- Analysis of processes generating waste, as discussed in the process AK reports and in this report.

The Transuranic Waste Characterization/Certification Project (TWCP) Records Management/Document Control (RMDC) Center contains copies of the documents that are referenced in this summary report. Unclassified Controlled Nuclear Information

(UCNI) will be reported in records, rather than included in this report. Such records are identified as UCNI in the Acceptable Knowledge Roadmap (Attachment 1).

This AK summary report is based on detailed information compiled in ~~the summation of~~ a set of closely related reports about TRU waste generating activities at TA-55. For convenience in organizing AK for plutonium processing at this facility, the processes were categorized into six arbitrary operational areas. The multiple processes in each area are then described in detail in the following six process AK reports for plutonium:

- *Process Acceptable Knowledge Summary Report for Chloride Operations at TA-55* (TWCP-AK-2.1-002, ~~R.1~~)
- *Process Acceptable Knowledge Summary Report for Metal Operation Processes at TA-55* (TWCP-AK-2.1-003, ~~R.1~~)
- *Process Acceptable Knowledge Summary Report for Miscellaneous Operations at TA-55* (TWCP-AK-2.1-004, ~~R.1~~)
- *Process Acceptable Knowledge Summary Report for Nitrate Operations at TA-55* (TWCP-AK-2.1-005, ~~R.1~~)
- *Process Acceptable Knowledge Summary Report for Pyrochemical Processes at TA-55* (TWCP-AK-2.1-006, ~~R.1~~)
- *Process Acceptable Knowledge Summary Report for Special Processing at TA-55* (TWCP-AK-2.1-007, ~~R.1~~)

The process AK reports contain information on over 200 ~~multiple~~ individual processes that have each been assigned a unique identifier called a process status (P/S) code. For example, the nitrate operations report (TWCP-AK-2.1-005, ~~R.1~~) covers waste generation processes and characteristics for about 80 different processes, each with its own P/S code. The search and compilation of AK information was based on P/S code, because that is the greatest level of process detail recorded in waste generation records.

The TA-55 Plutonium Facility tracks waste items both by the process from which they originated and their material content. Waste items are labeled with an item identification (ID) code that contains information on the waste material parameter of the item and an embedded P/S code that corresponds to the process that produced the waste item. Waste items are packaged into waste containers based on the material content of the waste, without regard to P/S code. This practice complicates AK tracking because a single waste container can include waste items from several P/S codes. Further complication is introduced because the waste streams for TA-55 have been defined based primarily on the physical form and material content of the waste and only secondarily on the waste generation process through mixed or non-mixed waste stream designations. Hence, any given waste stream could potentially contain items from all of the plutonium recovery

TA-55-19 and TA-55-20 combustible debris waste streams were generated in the TA-55 Plutonium Facility (Building PF-4). A LANL site map and a detailed map of the buildings at TA-55, including Building PF-4, are shown in Attachment 2.

3.2 Waste Physical Form and Content Description

Check with Pam (Item 2)

The TA-55-19 and-20 are defined as combustible debris waste streams ~~are defined as retrievably stored waste streams~~ (Sampling Plan, Appendix D), with TA-55-19 being a mixed waste stream and TA-55-20 its non-mixed counterpart. The waste includes paper, rags, plastic, rubber, and plastic-based and cellulose-based waste generated at the facility. Plastic-based waste includes, but may not be limited to, polyethylene and vinyl tape, gloves, plastic vials, polystyrene, Tygon tubing, polyvinyl chloride plastic, Teflon products, Plexiglas, and dry box gloves (unleaded neoprene base). Cellulose-based waste includes, but may not be limited to rags, wood, paper, and cardboard; laboratory coats and overalls; booties and cotton gloves, and similar materials. The waste may also contain a small fraction (<5%) of non-combustible solids (scrap metal, metal lids, and clothing zippers) (Sampling Plan, Appendix D).

3.3 Waste Volume and Time Period of Waste Generation

The following information is from the Sampling Plan (TWCP-PLAN-0.2.7-001, R.3, Appendix D). These values are expected to change because the sampling plan is continually updated as new waste information is obtained.

TA55-19A

- TA-55-19 includes 4173 containers (873 cubic meters), that were generated from 1978 to the present time.
- TA-55-20 includes 281 containers (59 cubic meters), that were generated from 1979 to the present time.

3.4 Basis, Rational, and Assumption used to Delineate the Waste Stream.

3.~~4~~5 Waste Stream Generation Processes

3.4.1 Overview

The TA-55-19 and TA-55-20 combustible debris waste streams were generated from combustible materials used in processes to recover plutonium from residues, metal fabrication, and research and development activities ~~performed in Pu-certified laboratories~~. The variety of plutonium handling operations includes:

- Preparing ultra-pure plutonium metals, alloys, and compounds
- Preparing on a large scale specific alloys, including casting and machining these materials into specific shapes

- Determining high-temperature thermodynamic properties of plutonium
- Reclaiming plutonium from scrap and residues produced by numerous feed sources
- Disassembling components for inspection and analysis
- Manufacturing of parts on a limited basis
- Processing mixtures of plutonium and uranium oxides for reactor fuels.

The manufacturing and research operations performed at TA-55 in the recovery of plutonium results in the production of plutonium-contaminated scrap and residues. These residues are processed to recover as much plutonium as is practical (TWCP-352). TA-55 has extensive capabilities for the extraction and recovery of plutonium from residues and scrap generated from operations at various LANL, other U.S. Department of Energy (DOE) facilities, and commercial radioactive sources. These recovery operations, along with associated maintenance operation, and TA-55 plutonium research are the sources of TRU waste generated at TA-55.

Plutonium processing facilities generate contaminated combustible waste from:

- Plastic materials that result in combustible waste such as Tygon tubing, polyvinyl chloride vials, plastic bags, etc.
- Cellulose-based cleaning aids and personal protective equipment such as rags, paper wipes, laboratory coats, coveralls, booties, etc.
- Rubber- and Teflon-based products used in operations, such as rubber gloves, Teflon tape, gaskets, stoppers, etc.

3.~~5~~2 ~~Process~~ Process Flow Diagrams →

Detailed information about the TA-55 plutonium recovery processes can be found in the Process AK reports. For purposes of the AK search, and to allow convenient referral to and referencing of the Process AK reports in this waste stream AK Summary Report, the processes have been divided into six major areas:

- Nitrate Operations
- Chloride Operations
- Miscellaneous Operations
- Special Processing

- Metal Operation Processes
- Pyrochemical Processes

Generalized flow diagrams for the six operational areas relevant to this AK search are presented as Attachment 3. With the exception of the report on chloride operations, these generalized flow diagrams indicate P/S codes for the various processes. (For chloride operations, P/S codes did not correspond to individual steps as shown on the diagram, so were not included.) The full block flow diagram for plutonium processing and waste management at TA-55 is given in reference TWCP-886.

The following subsections describe the processes that generated debris waste assigned to the TA-55-19 and TA-55-20 waste streams. The potential for RCRA-regulated constituents to be present due to feed materials or chemical use in these processes is summarized in Section 3.5. The applicability of EPA HWNs as a result of this potential is specified in Section 8.

Insert P/S codes

3.4.2 Nitrate Operations

A detailed description of nitrate operations can be found in *Process Acceptable Knowledge Summary Report for Nitrate Operations at TA-55* (TWCP-AK-2.1-005, R.1).

The overall goal of the nitrate operations is to recover plutonium from scrap and residues, and produce a purified plutonium oxide for conversion into metal. The primary feed sources for the nitrate operations are plutonium residues from other recovery operations (e.g., chloride), metal preparation, metal fabrication, analytical laboratory operations, and residues from other DOE facilities. Nitrate operations can be broken down into the following process steps:

operations

- pretreatment
- dissolution
- purification
- evaporation
- cement fixation

Pretreatment primarily includes physical processes used to separate scrap and residues for the next step, dissolution. It may include calcination, caustic leaching, chemical separation (hydroxide or oxalate precipitation), crushing and pulverizing, distillation, filtering of liquids or oils, incineration, magnetic separation, passivation, scraping, or sorting. After pretreatment, solids are sent to dissolution if plutonium concentrations are above the discard limit (DL) and to cement fixation if

concentrations are below the DL. Liquids are sent to purification if plutonium concentrations are above the DL and to the TA-50 Radioactive Liquid Waste Treatment Facility (RLWTF) if they meet the TA-50 RLWTF waste acceptance criteria (WAC) or to cement fixation; otherwise, they are further treated until they meet that WAC.

Dissolution includes various steps that generate plutonium nitrate solutions for feed to purification. Primary chemicals used in dissolution are nitric acid and calcium fluoride and/or hydrofluoric acid. Dissolution takes place in pots or cascade systems. Filtered solids are returned to the dissolution process until plutonium concentrations are below the DL, then sent to cement fixation for disposal. Debris items are disposed after removal of plutonium contamination above the DL. Heavy metals are concentrated in the plutonium-rich hydroxide cakes that are produced in chloride operations and derive from one or more of the following: (a) feed materials that consist of or contain the metals; (b) leaching of metal from equipment components; or (c) in the case of silver, from its use (until 1994) as an indicator of chloride content. Plutonium-bearing solutions are sent on to purification.

Purification consists of ion exchange and precipitation processes. The ion exchange processes use resin-filled columns to collect plutonium, which binds to the resin while impurities flow through the columns; an eluting agent is then used to release purified plutonium in solution. The enriched solutions are then sent to oxalate precipitation, which converts the plutonium to oxide form. The depleted liquids are sent to the evaporator or the RLWTF, and the calcined plutonium oxides are sent to the vault.

The evaporator processes plutonium-poor liquids in order to re-concentrate plutonium, if possible, or to reduce the volume of liquid waste. Evaporator bottoms are either sent back to ion exchange or discarded to cement fixation, depending on their plutonium content. Heavy metals that may be present are concentrated in this process.

In the cement fixation step, wastes with low plutonium concentrations are collected and immobilized in cement. Most if not all of the waste generated under these processes (P/S codes CF, HP, and IA) are classified as cemented wastes and would not be part of the debris waste streams.

Insert P/S codes →

3.4.3 Chloride Operations

A detailed description of chloride operations can be found in *Process Acceptable Knowledge Summary Report for Chloride Operations at TA-55* (TWCP-AK-2.1-002, R.1).

The overall goal of the chloride operations is to recover plutonium from scrap and residues and produce a purified plutonium oxide for conversion to metal. The primary feed sources are plutonium residues from pyrochemical operations, PuBe neutron sources, analytical laboratory solutions, and residues from other DOE facilities. Chloride operations can be broken down into the following process steps:

- pretreatment
- dissolution
- purification
- hydroxide precipitation

Pretreatment may include sorting, crushing, and/or pulverizing feed materials prior to being fed into later steps of chloride operations. A separate pretreatment procedure is the decladding of plutonium-beryllium sources. The PuBe metal alloy is removed from the sources, which are then entered into the chloride line for plutonium recovery along with other materials.

In the dissolution step, hydrochloric acid is used to leach and dissolve plutonium from scrap, crucibles, residues, and various solutions, including solutions from the analytical chemistry laboratory. Enriched solutions undergo further purification (see next paragraph), and solid wastes are ~~sent to~~ discarded as debris waste or sent to cement fixation (see Section 3.4.2.1, Nitrate Operations).

Purification steps may include solvent extraction, ion exchange, and oxalate precipitation, depending on the chemical nature of the material to be purified. Ion exchange columns are used to collect plutonium and separate out impurities. Enriched solutions may be further treated with oxalic acid to precipitate plutonium oxalate, which is converted to plutonium oxide.

In the hydroxide precipitation step, plutonium in solutions from purification steps is precipitated with potassium, magnesium, or sodium hydroxide. The resulting enriched hydroxide cakes become feed material for nitrate operations (see Section 3.4.2.1, Nitrate Operations), and liquid meeting the TA-50 WAC is sent to the RLWTF using the caustic waste line. Some hydroxide cakes are returned to the dissolution step for re-processing.

Insert MS codes →

3.4.4 Miscellaneous Operations

A detailed description of miscellaneous operations can be found in *Process Acceptable Knowledge Summary Report for Miscellaneous Operations at TA-55* (TWCP-AK-2.1-004, ~~R.1~~).

Research and development projects at TA-55 include an array of activities involving applied techniques and methods designed to study and improve processes associated with the purification, separation, extraction, recovery, and characterization of actinides (primarily plutonium) from various matrices. ~~The nature of many of the investigations and experimental activities has been such that no one detailed procedure can describe the variety of activities carried out.~~ General types of miscellaneous processes are described below.

Extraction/Separation Studies. ~~From July 1979 until September 1994 or later,~~ a series of similar actinide extraction, separation, and characterization R&D studies ~~occurred in Room 208. These studies were conducted under various revisions of three series of procedures:~~ Involved: processing of actinide hydroxide cakes from chloride and nitrate operations, development of sensors and instrumentation for online chemical analysis, and purification process development (R&D). The process R&D activities were of a non-routine developmental nature involving research, process development, small scale "trouble-shooting," and occasionally preparation of various isotopes and isotopic mixtures of plutonium, uranium, americium, and neptunium.

Halogenation Studies. A variety of R&D efforts used fluorinating agents to fluorinate samples containing plutonium residues. A gas flow loop was used to pass a fluorinating agent through a gas-solid reactor where plutonium in the solid residue reacted chemically to form solid PuF_4 or gaseous PuF_6. Gaseous PuF_6 was trapped in a cold trap, distilled, and reduced to PuF_4. Separation operations involving experimental chlorination processes were similar to the fluorination procedures. A gas loop was used to flow carbon tetrachloride and perchlorocarbons through a gas-solid reactor to chlorinate plutonium oxides to form recoverable plutonium compounds. ~~Once produced, the plutonium compounds and/or plutonium-bearing matrices were subjected to further treatment to achieve complete plutonium recovery.~~

See metal AK report for editing of this section

Non-Aqueous Dissolution/Extraction Operations. Non-aqueous dissolution/extraction operations included the dissolution of actinide compounds and actinide-containing matrices in superacid media. The superacid solutions were evaporated to leave solid products that were analyzed by a variety of methods. The study of the organometallic chemistry of uranium and thorium in non-aqueous solvents consisted of a variety of small-scale organoactinide operations involving fundamental research of the synthesis in non-aqueous media of new actinide compounds, their characterization and reaction chemistry, and application to existing actinide processing technology. Other operations comprised a broad range of laboratory activities in support of

to carbon dioxide. Nitrate contaminants are converted to nitrogen gas and some nitrous oxide. Components such as chlorine, sulfur, and phosphorus are oxidized and converted to acids or salts. Gases are liberated; solids and liquids are collected for recovery or disposal.

Electrochemistry Experiments. Electrochemistry methodologies were designed to decontaminate items, replace processes that produce large amounts of waste, or enhance chemical reactions. The process involved uranium decontamination of disassembled weapon components from various sites with various levels of surface contamination with plutonium. The operation was strictly an aqueous process in which an alkaline solution was reacted with the components to precipitate uranium. Significant amounts of metal could be stripped in a short period of time. The precipitated solution comprised either uranyl hydroxide or uranyl sulfate, which was then dried for mass balance.

Insert Metallography from next page

Waste Management Operations. P/S code RD was used only in 1984–1986. It allowed for tracking of demonstration drums (one drum each year) that were packaged and prepared in accordance with the TA-55 Attachments to the Certification Plan (TWCP-701) to meet the WIPP requirements at that time. Packaging of these drums did not of itself result in the generation of TRU waste. The waste drums that were packaged contained non-mixed TRU waste.

Operations under P/S code NCD occurred from April 1989 – April 1991 in Room 432. This P/S code was established to provide a mechanism for dealing with TRU drums that did not confirm specifications (e.g., recorded weight or nuclear material content). Non-confirming drums were temporarily set aside until such time as personnel could reprocess them under P/S code WM to correct the nonconfirming condition. After April 1991, nonconfirming drums were dealt with immediately, and P/S code NCD was no longer needed.

P/S code WM is currently limited to waste that arises from the TRU solid waste management operation in Room 432. This situation has been the case since the beginning of 1993. Room trash boxes from Building PF-4 have always been handled as low-level waste; however, the boxes were assayed to verify contamination levels and any that were determined to be TRU waste were diverted to Room 432 for repackaging as such. From May 1987 through 1992, these boxes were created as P/S code XO or X0. These codes were changed to P/S code WM after 1992. Additional controls were placed on room trash after 1992. Trash was assayed with the Multiple Energy Gamma Assay System (MEGAS). When a container was rejected on the basis of MEGAS data, the rejected container was returned to the originator for removal of any "hot" item(s).

This process also allowed for greater control to prevent discarding regulated materials (e.g., RCRA constituents) in room trash.

P/S code X0 was designated for waste materials that could not be associated with a specific room, such as a hallway, mezzanine offices, rest rooms and change rooms, basement, pump rooms, and trolleys. The waste from all these areas, except the pump rooms and trolleys, would be low-level waste and no RCRA constituents would be associated with the waste items.

P/S code XO indicated waste materials that were generated within specific rooms but could not be associated with an individual P/S code in that room.

Move to precede Waste Mgmt

Metallography. The purpose of the metallography operation is to characterize the microstructure of metallic or ceramic pieces to verify and establish the quality and effectiveness of welds. Materials examined ~~(under this P/S code)~~ consist of plutonium and uranium carbides, nitrides, and oxides, as well as zirconium and tantalum alloys, and stainless steel. Metal pieces (pellets) are cut with a diamond saw. Ceramic pieces are subjected to grinding with standard metal grinding media (e.g., papers impregnated with silicon carbides and diamond). The materials are polished with several different chemical compounds.

3.4.5 Special Processing

Insert P/S codes

A detailed description of special processing is found in *Process Acceptable Knowledge Summary Report for Special Processing at TA-55* (TWCP-AK-2.1-007, ~~R.1~~).

Special Processing includes processing operations for Material Type (MT) 42, and research and development (R&D) activities for MT 52. (See Section 3.5.1 for a discussion of plutonium material types.) ~~MT 42 processes are smaller scale processes similar to recovery operations utilized for MT 52.~~ Because processing MT 42 is a smaller scale version of the recovery processes used for MT 52, MT 42 processing has five main recovery steps: (1) head-end operations, (2) nitrate ion exchange operations, (3) chloride ion exchange operations, (4) separation and purification by precipitation, and (5) pyrochemical processes. Only head-end operations and separation by purification and precipitation are covered here, since nitrate ion exchange operations, chloride ion exchange operations, and pyrochemical processes are covered briefly elsewhere in this report.

(Relocate 098 TWCP-AK-2.1 set) (see table 2)

Head-end operations leach tools, labware, crucibles, rags, etc in nitric acid to remove recoverable plutonium. Plutonium oxide is typically calcined as part of head-end operations.

Separation and purification by precipitation is a method of plutonium removal from aqueous solutions. The most common precipitation methods utilize oxalate, hydroxide, and peroxide anions. By selectively precipitating the plutonium, many of the metals remain in solution, thereby purifying the plutonium.

All wastes generated by MT 52 R&D operations are replicated for MT 42, but carry different P/S codes to differentiate and identify the radionuclide content of the waste. Outputs from Special Processing include high purity metal for casting and machining.

Insert P/S codes →

3.4.6 Metal Operation Processes

A detailed description of metal operation processes is found in *Process Acceptable Knowledge Summary Report for Metal Operation Processes at TA-55* (TWCP-AK-2.1-003, ~~R.1~~).

The processes included in metal operations can be divided into three groups:

- reactor fuel development processes
- on-going metal operation processes
- developmental metal operations

The main goal of metal processes is to take the high purity metal produced by pyrochemical operations and produce shaped metal pieces.

In reactor fuel development, enriched uranium oxide, depleted uranium oxide, and/or plutonium oxide feeds are blended and mixed with graphite, and various operations are performed to convert the feed material into pellets that can be used for fuel. Testing and R&D are done on the fuel pellets. Trichloroethylene was used as a lubricant from 1979 to 1994.

On-going metal operation processes include various R&D activities, alloy development, casting of metals, welding, coating, and machining/metalwork on various metals. In machining, trichloroethylene was used from 1979 to 1992 and from 1997 to the present, for final cleaning. In alloy development, Freon was used from 1989 to 1992 to clean parts. The plutonium sputtering process used arsenic for a short period during 1984 to 1985.

Developmental metal operations include the Advanced Recovery and Integrated Extraction System (ARIES) project, assembly operations, burst testing of shells, experimental laser welding, furnace operations, and various other experimental activities. Waste from burst testing, conducted from 1998 to the present, contains lead. Waste from the Kolsky Bar Test Facility also contains lead and/or lead oxide.

Insert P/S Codes

3.4.7 Pyrochemical Processes

A detailed description of pyrochemical processes is found in *Process Acceptable Knowledge Summary Report for Pyrochemical Processes at TA-55* (TWCP-AK-2.1-006, R.1).

Pyrochemical processes include metal preparation, metal purification, and ancillary metal production operations. Pyrochemical process outputs are most often high purity metals for metal operations.

Metal preparation processes include the following operations:

Metal Preparation Line. The metal preparation line produces plutonium metal from fluoride salts (derived by reacting hydrogen fluoride gas with plutonium oxides obtained from calcination of oxalate or peroxide precipitates from the aqueous nitrate or chloride process lines). ~~In the metal production process,~~ The plutonium compound is further reacted to produce with various chemicals, ~~with the desired end product of~~ plutonium metal, which can then be recovered as a button by breaking the crucible. Although little or no purification of the plutonium occurs, ~~no impurities are introduced and the resulting metal is often satisfactory for high-purity applications.~~

Direct Oxide Reduction(DOR) and Multiple-Cycle Direct Oxide Reduction(MCDOR). In the single pass DOR process, plutonium oxide and calcium *metal* are reacted in molten calcium chloride ($CaCl_2$) or $CaCl_2$ mixed with calcium fluoride (CaF_2), to produce plutonium metal. The reaction is conducted in a magnesium oxide (MgO) crucible ~~at 820°C to 875°C. The reaction proceeds to completion when excess calcium is present and when sufficient~~ $CaCl_2$ is available ~~to dissolve~~ the calcium oxide (CaO) product.

After cooling, a plutonium metal button is removed by breaking the crucible. A layer of salt above the button contains unreacted oxide and metal shot, which was sometimes *recovered* by addition of fresh salt plus additional calcium metal.

To minimize the salt waste, the multicycle DOR (MCDOR) process was started ~~in 1988. In this process,~~ the molten salt is regenerated by

in which

sparging the $CaCl_2$-CaO mixture with chlorine gas between multiple plutonium metal production runs. After approximately five cycles of metal production, the mixture is cooled and the salt and metal phases are separated. ~~The salt is chlorinated and reused for MCDOR.~~

Metal purification processes include the following:

Molten Salt Extraction (MSE). MSE is used to separate americium and the more reactive elements such as rare earth elements, alkali metals, and alkaline earth metals from plutonium metal (TWCP-352). This process is employed only if the americium content is greater than 1000 ppm. In the original process, which operated from 1979 to 1988, magnesium chloride ($MgCl_2$) was added to the impure plutonium metal in a molten salt of sodium chloride (NaCl) and potassium chloride (KCl), contained in a MgO crucible and heated to 750°C. The magnesium chloride oxidized americium to $AmCl_3$, although some plutonium was also converted to the chloride salt form. In 1988, the MSE process was converted to use plutonium chloride ($PuCl_3$) produced by in-situ chlorination in a tantalum crucible. In the LANL process, 90 percent of the americium and 10 percent of the plutonium are transferred from the feed metal to the salt. After cooling, the salt and metal are mechanically separated. The salts are transferred to the salt stripping process.

Electrorefining (ER). The ER process takes impure metal from the MSE and MCDOR (DOR) processes and produces high purity plutonium metal. Impure plutonium is cast as an anode, which is then placed in a magnesium oxide crucible with a salt mixture, a metal cathode (typically tungsten), and a seeding reagent that is $MgCl_2$ or $PuCl_3$. After the anode and salt melt, current is applied to the system, and plutonium at the anode is oxidized to plutonium ions, which travel to the cathode and are reduced back to the metal state. Impurities in the original plutonium anode that are less electroactive than plutonium (including cadmium, chromium, lead, and silver) remain in the anode, while impurities more electroactive than plutonium (including barium) are left in the molten salt. After cooling, the crucible is broken and the residues are physically separated from the high purity product metal. Anode heels were sent to pyroredox from 1984 to 1986. Currently, salts are sent to chloride operations or carbonate oxidation/distillation.

From 1987 to 1989, secondary solvent metals such as cadmium, bismuth, lead, and gallium were added to experimental studies of the ER process. ~~These particular anode heels are retained in the vault at TA-55, with no plans to reprocess them in the near future.~~

Ancillary metal production operations include the following:

Salt Stripping. The MSE and ER salts are further treated by salt stripping, oxygen sparging or carbonate oxidation, and salt distillation. The salt stripping process treats the residue by melting and stirring the salt with calcium metal in a magnesium oxide crucible at 850°C. This treatment reduces the plutonium in the salt to metal and allows the metal to coalesce for physical removal and recovery. After cooling, the crucible is broken and the metal physically separated and recycled to the ER process or burned to oxide and sent back through aqueous recovery. The crucible shards are leached in hydrochloric acid, then discarded.

Oxygen sparging and, since 1996, carbonate oxidation are used to ensure that any plutonium, americium, or metallic sodium or potassium left in the salts are converted to nonpyrophoric oxide forms.

Wastes that potentially contain this ~~V~~ chemical (HWN P120) will be segregated into waste stream lot TA-55-19A (section 4.0).

Vanadium pentoxide (V_2O_5) was used in place of carbonate to convert metals to oxide as part of the salt stripping process for a few months in 1998.

Salt Distillation. Salt distillation, begun in 1997, allows the recovery of plutonium oxide from the chloride salt and produces purified chloride salt for reuse. ~~NaCl/KCl salt is distilled at 850°C.~~

Pyroredox. The pyroredox operation was used to recover plutonium from spent anode heels in the mid to late 1980s. The anode heel was polished with calcium metal to remove surface oxide, then oxidized to plutonium (III) with zinc chloride ($ZnCl_2$) in molten KCl, forming plutonium chloride ($PuCl_3$). Elements more electroactive than zinc (including barium) were oxidized into the salt phase, and the zinc formed a metal button. The salt was then mixed with calcium metal in $CaCl_2$ to reduce the plutonium to the metal phase, as well as reducing all elements less electroactive than calcium. The salt phase containing small amounts of the impurity barium was mechanically separated from the metal phase and discarded. The metal phase containing zinc was placed in the vault or further treated, and the plutonium eventually was routed back to ER.

Ingot Casting. Metal is melted in a MgO crucible to cast the ingot.

Metal Coalescence. Metal coalescence is used for plutonium turnings to coalesce the turnings into a metal button. Calcium metal and $CaCl_2$ are added to a MgO crucible along with the turnings and melted.

Metal Oxidation. Small pieces of metal remaining on furnace or crucible surfaces are collected for conversion to the oxide phase. These metal pieces are placed in a furnace for the conversion process. The oxide is then transferred to the vault.

Neptunium. A campaign to work off neptunium residues stored in the vault was undertaken in 1993 and was only active that year.

Pickling. Pickling (i.e., leaching metal with a strong acid) is typically a head-end operation. After a few furnace runs, plutonium metal begins to accumulate on tools and furnace parts. It then becomes necessary to leach the plutonium from these items. In addition, after calcium metal reduction processes such as metal preparation, direct oxide reduction, and molten salt extraction, plutonium metal will have an adherent skin of calcium metal. Hydrochloric acid is used to dissolve Pu from tantalum furnace parts, and nitric acid is used to pickle Pu from other metals.

Plutonium Trichloride Preparation. An intermediate process in Pu metal production prepared plutonium trichloride by bubbling a carrier gas (chlorine) through carbon tetrachloride and passing the mixed gas stream through a bed of plutonium oxide at 500°–600°C before being absorbed in a 5–6 molar potassium hydroxide solution. The carbon tetrachloride was broken down into ~~hydrogen chloride~~ phosgene, carbon monoxide, and carbon dioxide gases in this process, which was active between January 1987 and June 1989, at which time the process switched to the use of phosgene gas until the process ended in May 1991. Feed material was high purity oxides from the vault or from other P/S codes. The product plutonium trichloride was reduced to metal by the MSE or ER processes.

3.5 Material Inputs to the Waste Generation Processes

Material inputs to the waste generation processes derive from three general sources: (a) feed material, (b) chemical use, and (c) ancillary material inputs such as those related to the use of laboratory equipment and materials and glovebox maintenance activities. The feed materials for TA-55 processes that generate waste in waste streams TA-55-19 and TA-55-20 consist of the general types of materials listed in Table 1 that are obtained either from the storage vault, as process output from various P/S codes, or from sources outside TA-55, including other DOE facilities. Chemical use is discussed in Section 3.5.3. Material waste form inputs are discussed in Section 3.5.1. Radionuclide inputs are discussed in Section 3.5.2.

3.5.1 Physical Waste Form Identification

Plutonium-processing facilities generate contaminated ~~mixed~~ combustible waste from:

- Plastic materials that result in combustible waste such as Tygon tubing, polyvinyl chloride vials, plastic bags, old bag-out stubs, etc.
- Cellulose-based cleaning aids and personal protective equipment such as rags, paper wipes, laboratory coats, coveralls, booties, etc.

Feed Material	Potential Presence of RCRA-Regulated Substances	P/S Codes, Listed by Process
Hydroxide cakes (process output from P/S codes CLS, CW, CXL, DO, POSM, PRR)	Typically contaminated with RCRA-regulated heavy metals Cd, Pb, Hg, Ag and possibly Cr (D006, D008, D009, D011, and D007)	Miscellaneous operations: AD Nitrate operations: CD, HCD, HD, LG2 Special processing: DO, POSM
Miscellaneous materials contaminated with Pu (e.g. sand, slag, tools, crucibles, metal, glass, plastic, labware, scrap, rags, glovebox sweepings, pump oils, HEPA filters)	May be contaminated with RCRA-regulated heavy metals Ag, Cd, Hg, Pb and possibly Cr (D006, D008, D009, D011, and D007)	Miscellaneous operations: APD Nitrate operations: ATL, BAC, CPOD, CR, ED, ETD, GMS, HGMS, IS (combustible ~~debris~~ material), LG1 (non-combustible material), MAG, MAS, MELL (cellulosic material), ML (metal equipment), NC (non-combustible material), NL (non-combustible material), PA (glovebox sweepings), PAF, RO (organics), SC, SP, TDC (cellulosic material), VC, ZD Pyrochemical processes: PK (hardware, metal, anode chips from other P/S codes) Special processing: ACD, DO, SB, SL
MSE salts	Typically fairly pure, suspect contaminated with barium but no other RCRA substances present	Chloride operations: MB, MS Miscellaneous operations: XP Nitrate operations: MB, PS
Neptunium residues from vault	No RCRA-regulated substances	Pyrochemical processes: Neptunium (only active in 1993)
Pu chlorides and fluorides	Variable purity	Miscellaneous operations: FDL, SO Pyrochemical processes: ER, SD, SS Special processing: RM
Pu metal or metal alloy from vault or from various P/S codes	High purity, no RCRA-regulated substances, unless noted otherwise	Metal operation processes: AO, ARI, BC, BT, CA, DA, ELW, EVAC, FSPF, ITF, ITF4, JA, KBTF, MA, MBC, MW, PCH (variable purity), PD, PE, PF, PH, RL, SRL, VD, WE, WLT Miscellaneous operations: AC, AC1, AC2, EXT, LIBS, ME, SA, SMP, VS Nitrate operations: ATL, BM, BU, MF, PAF, VP1 Pyrochemical processes: CRD (variable purity), MO, SCB, SS, SSMD Special processing: ACC (variable purity), PI (variable purity), PPD, POSM, RM, SB

Feed Material	Potential Presence of RCRA-Regulated Substances	P/S Codes, Listed by Process
Pu oxalates	Typically fairly pure, no RCRA substances present	Nitrate operations: CC, DF, HC
Pu oxides	Variable purity from P/S codes RB, RBJ and others, and from the vault; suspect contaminated with RCRA-regulated heavy metals Cd, Cr and Pb (D006, D007, D008) High purity oxides from P/S codes CA, ~~DO~~, and MA, and from the vault Stet	Metal operation processes: DOP (high-purity Pu and other radionuclides as oxides) Miscellaneous operations: CK, CV, EOC, EXT, FDL, FLU, IB, IE, LI, LIBS, SO, STF, VS, XP Nitrate operations: ATL, BL, CH, CPOD, DP, ED, FC, LC, MPD, OD, PT, RB, RBJ, SP, SSD, UPS, US, US2 Pyrochemical processes: MP (generally high purity), OR (variable purity), PTP Special processing: DO, PI, PX, POSM, RM
Pu-Be sources	High purity constituents, no RCRA-regulated substances	Chloride operations: PB, PUB
Pyrochemical processes:chemical salts	Typically fairly pure, no RCRA substances other than Ba (D005) are present	Chloride operations: MB, MS, PRR Miscellaneous operations: EXT, IB Nitrate operations: COD, COL, MB Special processing: DO
Reactor fuel pellets	High purity Pu and U material types, no RCRA-regulated substances	Metal operation processes: ME
Stainless steel and/or tantalum residues from decladding of Pu-Be sources	High purity metals, potential leaching of chromium (D007) from stainless steel if subjected to strong acid	Chloride operations: PUB

(e.g., combustible, metal, glass, etc.)

- Rubber and Teflon-based products used in the operations, such as rubber gloves, Teflon tape, gaskets, stoppers, etc.

Waste items from several different processes were segregated by physical waste form and packaged into waste containers. The physical description of each waste item generated was documented on a Waste Origination and Disposition Form (WODF) by the waste generator according to controlled procedures. The P/S code for many waste items is also documented on this form, although recording of P/S codes was spotty before about 1990. TRU waste drums containing one or more waste items were packaged by the Nuclear Material Technology Group (NMT-7) according to procedures referenced in the applicable version of the TA-55 Attachments to the Certification Plan (TWCP-697). Sample attachments are referenced as TWCP-701 (for 1987) and TWCP-700 (for 1995). In the packaging process, a standard form, the Discardable Waste Log Sheet (DWLS), was used to list each ID code and record its matrix material. This form was signed by the waste packager and approved by quality assurance personnel.

(for combustible debris)

Both the WODFs and DWLS for each TRU waste drum have been maintained as hard copy records by the generator. For waste stream TA-55-19, example copies of these container records are included in Attachment 4. Note that this waste container (LA00000056636) contains waste items generated by three different P/S codes (CXL, ED, and SC), each with its own completed WODF.

3.5.2 Radionuclide Content Identification

The primary Pu material type inputs for metal operation processes at TA-55 are listed in Table 2. The designation *material type* (e.g., MT 52) is used within the DOE Complex to describe the isotopic composition of common blends of radioactive materials used within the Complex. The material type notation was developed because it is a convenient way to describe material types that have very consistent isotopic compositions. Table 2 indicates the isotopic composition of the material types at the time the waste was characterized.

The material type provides the basis for estimating an upper bound for U-234, U-235, and Am-241 contents based on the rate of decay of their precursors, Pu-238, Pu-239 and Pu-241, respectively. The results of these calculations are also tabulated in Table 2, assuming (a) none of these isotopes were initially present in the material, (b) the oldest Pu material in inventory dates back to 1 January 1960, and (c) the waste was packaged on 1 January 1996, making it 36 years old (TWCP-698).

Table 2. Average Isotopic Content of Plutonium Material Types and Enrichments (Weight %)

bounds dimensionless

Material Type (MT)	Plutonium isotope and half-life						Upper limits for weight ratios[a]		
	Pu-238 (87.74 yr)	Pu-239 (24120 yr)	Pu-240 (6564 yr)	Pu-241 (14.35 yr)	Pu-242 (376,300 yr)	Pu-244 (8.26 x 10^7 yr)	U-234/ Total Pu	U-235/ Total Pu	Am-241/ Total Pu
MT 51	0.006	96.77	3.13	0.076	0.018	—	1×10^{-5}	0.001	0.0006
MT 52	0.01	93.78	6	0.2	0.02	—	2×10^{-5}	0.001	0.002
MT 53	0.03	91.08	8.45	0.366	0.071	—	7×10^{-5}	0.0009	0.003
MT 54	0.046	87.42	11.5	0.81	0.22	—	0.0001	0.0009	0.007
MT 55	0.06	83.88	14.73	1.03	0.304	—	0.0002	0.0009	0.009
MT 56	0.061	81.9	16.51	1.18	0.355	—	0.0002	0.0009	0.01
MT 57	0.433	74.63	20.7	2.55	1.69	—	0.001	0.0008	0.02
MT 42									
84%	1.02	1.37	10.32	3.13	84.14	0.02	0.003	1×10^{-5}	0.03
90%	0.72	1.26	6.4	1.86	89.77	—	0.002	1×10^{-5}	0.02
95%	0.45	0.56	2.47	0.906	95.58	0.029	0.001	6×10^{-6}	0.008
MT 83									
83%	83.89	13.8	1.9	0.32	0.09	—	0.26	0.0002	0.003
89%	89.26	10.07	0.633	0.021	0.015	—	0.28	0.0001	0.0002

Source: TWCP-698

The primary uranium material type inputs for reactor fuel development activities and for pit disassembly at TA-55 are listed in Table 3.

Table 3. Average Isotopic Content of Uranium Material Types and Enrichments (Weight %)

Material Type	U-234	U-235	U-236	U-238
MT 12	0.0015	0.23	0.008	99.77
MT 35	0.36	37.6	0.14	61.9
MT 36	0.63	62.44	0.18	36.75
MT 38	1.03	93.04	0.41	5.53
MT 39	1.32	97.52	0.17	0.99

Source: TWCP-698

Footnote: (see AK-02)

Metal operation processes primarily receive feed material from other P/S codes, particularly P/S code SS (TWCP-AK-2.1-006, ~~R.1~~) and RM (TWCP-AK-2.1-007, ~~R.1~~), and are not expected to alter the isotopic ratios of the feed material. The material type used in the process generating each waste item was documented on the WODF and DWLS (examples shown in Attachment 4). Many P/S codes processed feed material in which radionuclides other than Pu were present in significant levels:

- Depleted or enriched uranium metal or oxides were the process feed materials for P/S codes CN, FF, GI, MW, OB, PD, RS, SRL, and UA. Of these codes, FF, PD, and SRL are still active.

- P/S code WE worked with radionuclides used as sources from 1978 to the present (Am-241, Am-243, Ce-144, Cm-244, depleted uranium, Pa-231, Np-237, Th-232, Th-232 enriched in Th-230) (TWCP-882).

- P/S codes BC and JA worked with Am-243 (1992 to present), depleted uranium (1990 to present), Np-237 (1983 to present), Pa-231 (1989), and Th-232 enriched in Th-230 (1994 to present). (P/S code JA ended in 1997 or 1998; BC is still active.)

- P/S code DOP worked with Am, Ce-144, Cm-244, Np-237, Th-232, U-233.

- P/S code DA worked with MT 52 alloys.

In some cases, information from subject matter experts has identified several P/S codes in which secondary radionuclides are expected to be present in process wastes, in addition to the cases listed above (TWCP-698):

- Some of the process wastes from P/S codes CA and MA contain Am-241, Am-243 and Np-237 during the period 1984 to 1990.

- Some of the process wastes from P/S code PH contains Am-243 (1993 to present).

Np-237, the decay product of Am-241 (half-life, 458 yr), is expected to be present mostly in minor amounts in nearly all debris waste from metal operation processes at TA-55, with the exceptions as noted above.

In general, uranium and its isotopes are expected to be present only at trace levels, if at all, if the feed material did not purposefully contain uranium. If the waste generator indicates that only Pu is present in the

delete "ful"

feed material, then U-236 and U-238 are not expected to be present in measurable concentrations. U-235 ingrowth from the decay of Pu-239 (half-life, 24,120 years) would be negligible due to the long half-life of Pu-239. On the other hand, U-234 would be present in MT 83 (and to a lesser extent in other Pu material types) as a decay product of Pu-238 (half-life, 87.74 years) (Table 1). After 20 years, 14.6 percent of the initial Pu-238 would have decayed to U-234. For MT 83 with an initial content of 83.89 percent Pu-238, the atomic ratio U-234 to total Pu would be about 0.14. After 36 years, this ratio would increase to 0.26.

Additional radionuclides are expected in wastes produced from specific processes. Processes at TA-55, including research and development efforts, are identified by a P/S code that is listed on the WODF by waste item. Additional radionuclides expected to be present in each process have been reviewed by a panel of experts at TA-55 and compiled in a memo according to P/S code (TWCP-882). Note that a waste container may contain items from more than one P/S code, because the bagged-out items from processes were loaded into drums by TA-55 waste management personnel based on physical waste form, volume, and radionuclide loading, not P/S code. For combustible streams generated from TA-55, some of the additional expected radionuclides can be summarized as follows:

- Am-241 and Am-243—P/S codes CA, CD, DOP, EV, HCD, HD, LR, MA, PR, RM, SS, and WE
- Np-237—P/S codes ATL, BC, CA, CF, DOP, ED, EV, IS, MA, RB, RFX, and WE
- D38 (depleted uranium)—very small quantity in P/S codes BC and WE
- Ce-144—very small quantity in P/S codes DOP and WE
- Th-232—very small quantity in P/S codes DOP and WE
- U-233—very small quantity in P/S codes DOP and WE
- Cm-244—very small quantity in P/S codes DOP, IS, PI, and WE
- Pu-238—small quantity in P/S code TDC
- Am-243—very small quantity in P/S codes BC, and PH
- Pa-231—very small quantity in P/S codes BC and WE

- Th-232 enriched with Th-230—very small quantity in P/S codes BC and WE

- U-235 and U-238—expected in all P/S codes applicable to Nitrate Operations (TWCP-AK-2.1-005, R.1)

During TWCP characterization, the contents of each waste package undergo non-destructive analysis to provide detailed radioisotopic data. These data will be used to evaluate the accuracy of AK information in accordance with *Waste Characterization Data Reconciliation with Acceptable Knowledge* (TWCP-DTP-1.2-064). If warranted, this AK report will be updated to incorporate the results of these comparisons.

3.5.3 Chemical Content Identification

Chemical contents of process inputs and outputs were complied from chemical lists contained in procedures reviewed during the process AK search and from SME input. Individual process AK reports contain detailed assessments of these chemical inputs, and of the applicability of EPA HWNs. In this section, discussion of chemical inputs are divided into the following categories: acids and bases, gases and cryogenic fluids, metals, inorganic chemicals that are not included in 40 *Code of Federal Regulations* (CFR) Part 260, inorganic chemicals that are included in 40 CFR Part 260, including Appendix VIII to that regulation, organic chemicals that are not included in 40 CFR Part 261, and organic chemicals that are included in 40 CFR Part 260, including Appendix VIII to that regulation.

Acids and bases. Acids used in the TA-55 processes covered in this report are ascorbic acid, formic acid, hydrochloric acid, Hydrofluoric acid, nitric acid, oxalic acid, perchloric acid, stearic acid, sulfuric acid, and superacids (e.g., HSO_3F). Bases used in these processes are calcium hydroxide, magnesium hydroxide, potassium hydroxide, and sodium hydroxide. No EPA HWNs are applicable to the use of these chemicals in the TA-55 processes for the following reasons:

- D002 (corrosivity) does not apply to the solid debris waste because there are no free liquids in this waste.

- D001 (ignitability) does not apply to the use of the oxidizers (nitric acid, perchloric acid, and superacids) because there are no free liquids in this waste.

- Formic acid and hydrofluoric acid are listed in Appendix VIII of 40 CFR Part 261, for their corrosive and toxic characteristics, with EPA HWN U123 and U134. However, these HWNs are not applicable to

Perchloric acid in solutions are send to cement fixation. The solids, perchloric salts, are rinsed from rags with water before they are discarded, so and perchloric salts are ended up in cementation.

the manner in which these chemicals were used and discarded in the processes covered by this report.

- None of these are F, K or P-listed chemicals

Gases and cryogenic fluids. The following gases and cryogenic fluids used in the TA-55 processes are not identified as having hazardous characteristics in 40 CFR Part 261, including Appendix VIII in that regulation: argon, carbon dioxide, chlorine, halogen fluorides, hexafluoroethane, hydrogen chloride, krypton fluoride, methane, nitrogen (gas), nitrogen (liquid), perfluoropropane, and tetrafluoromethane.

The following gases used in the TA-55 processes are identified in Appendix VIII of 40 CFR Part 261 as having hazardous characteristics. The chemical name is followed by the listed EPA HWN and the P/S codes in which the gas is used:

- Fluorine (P056) is used in P/S codes CV, FDL, FLU, PI, SO
- Hydrogen fluoride (U134) is used in P/S codes MP, PI
- Nitrogen dioxide (P078) is used in P/S code HRS
- Phosgene gas (P095) is used in P/S code PTP

No EPA HWNs are applicable to the use of these gases in the TA-55 processes. Compressed gas cylinders are kept outside of the gloveboxes; most are even outside the building, and the gases are plumbed into the glovebox. Thus the gas cylinders are not discarded with TRU wastes. Additional reasons are as follows:

- D002 (corrosivity) does not apply to the use of hydrogen fluoride because there are no free liquids in the solid TRU waste.

- D003 (reactivity) does not apply to phosgene because any excess chemical was passed through a solution of sodium hydroxide or potassium hydroxide, thereby producing a chloride salt solution.

- P056 (fluorine), P078 (nitrogen dioxide) and P095 (phosgene) are not applicable to the listed TA-55 processes because of the manner in which these gases are used and discarded in the processes covered by this report.

- Hydrogen fluoride (U134) is listed in Appendix VIII of 40 CFR Part 261 for its corrosive and toxic characteristics. However, this code is not applicable to the manner in which this gas is used and discarded in the processes covered by this report.

Metals. The following metals used in the TA-55 processes are not identified as having hazardous characteristics in 40 CFR Part 261, including Appendix VIII of that regulation: bismuth, bismuth-tin alloy, calcium, copper wool, gallium (metal, oxide or salt), gold, lanthanides, lutetium, niobium + 1% zirconium metal, platinum, platinum-rhodium alloy, tantalum (metal, alloy, oxide or salt), titanium, uranium powder (depleted), vanadium, and zirconium alloy.

Several metals used in TA-55 processes are identified in 40 CFR Part 261 or in Appendix VIII of that regulation as having hazardous characteristics. The bullets below list the chemical name, its listed EPA HWN, the P/S codes in which the metal is used, and the applicability of the EPA HWNs to the use of these metals in the TA-55 processes:

- Alkaline earth metals (D003) were used in P/S codes AC, AC1 and AC2; it is possible that one or more of these were pyrophoric. However, EPA HWN D003 does not apply to P/S codes AC, AC1, or AC2 because the metals are consumed or oxidized before discarding.

- Arsenic (D004) was used in P/S code PE between 1984 and 1985, and EPA HWN D004 is applicable to P/S code PE during this period.

- Cadmium (D006) applies to a limited number of anode heels produced in P/S codes ER, PX, and SS using cadmium as a solvent. ~~However, these heels are in the vault, with no plans to purify them in the near future.~~ delete

Fcxx?

- Lead (D008) was used in P/S codes ~~BT~~, ER, KBTF, PX, SS, and ~~WK~~. For combustible debris waste, EPA HWN D008 is applicable to ~~P/S code~~ KBTF and PX. For P/S codes ~~BT~~, ER, and SS, D008 is only applicable to the metal waste.

DoP

DoP

- Tin-lead (D008) solder was used in sensors in P/S code BT, but D008 is only applicable to the metal waste from this P/S code, and not to the combustible debris waste.

- Mercury (D009) applies to P/S code SSMD, in which it was used for about one week in the summer of 1994.

- Nickel powder and nibblets were used in P/S code CO ~~for powder~~ as a sintering aid. This metal is listed in Appendix VIII but no HWN is given.

- Sodium (D003) was used in P/S code EL. However, D003 does not apply in this case because excess Na is dissolved in Dowanol 80.

- Stainless steel (contains chromium, D007) was used in P/S code WE. However, EPA HWN D007 does not apply in this case. There is no potential to leach chromium because stainless steel is not exposed to strong acids in P/S code WE.

Inorganic chemicals. The following inorganic chemicals used in the TA-55 processes are not identified as having hazardous characteristics in 40 CFR Part 261, including Appendix VIII in that regulation: aluminum bifluoride, aluminum chloride, aluminum fluoride, aluminum nitrate, aluminum oxide, ammonium chloride, antimony pentafluoride, bromine, calcium carbonate, calcium chloride, calcium fluoride, calcium nitrate, cerium nitrate, cesium chloride, cobalt nitrate, ferric ammonium sulfate hydrate, ferric nitrate, ferrous ammonium sulfate, ferrous chloride, ferrous sulfamate, FOOF, graphite, gypsum cement, hydrogen peroxide, hydroxylamine hydrochloride, hydroxylamine nitrate, iodine, lanthanum nitrate, lithium chloride, magnesium chloride, magnesium oxide, magnesium perchlorate, molybdenum oxide, phosphates, Portland cement, potassium chloride, potassium fluoride, potassium permanganate, potassium thiocyanate, silicone lubricant, sodium bicarbonate, sodium carbonate, sodium chloride, sodium chlorite, sodium nitrate, sodium nitrite, sodium oxalate, sodium sulfate, sodium tetraborate, stannous chloride, thorium oxide, uranium oxide (depleted), zinc chloride, zinc stearate, and zirconium carbide. Some processes indicated the use of nitrate, chloride, carbonate, bicarbonate, oxalate, and nitrite salts of sodium, potassium, lithium, magnesium, calcium, and iron.

move DCHP to inorganic chemical list

Several inorganic chemicals used in TA-55 processes are identified in 40 CFR Part 261 or in Appendix VIII of that regulation as having hazardous characteristics. Table 4 lists these chemicals, their HWN, P/S codes in which they were used, and the applicability of the HWNs to the use of these chemicals in TA-55 processes:

Organic chemicals. The following organic chemicals used in the TA-55 processes are not identified as having hazardous characteristics in 40 CFR Part 261, including Appendix VIII in that regulation: 1-propanol, 3-in-1 household oil, alkylating agents (unspecified), bromobenzene, bromocresol purple, carbon tetrafluoride, DBBP (dibutyl butyl-phosphonate), DBBP (dibutyl butyl-phosphonate)/Isopar (isoparaffinic hydrocarbon solvent), ~~dicesium hexachloroplutonate (DCHP)~~, diethyl oxalate, dihexyl n,n-diethylcarbamoylmethyl phosphonate (DHDCMP), diisopropyl benzene, Dow Corning 2000 Oil, Dowanol 80 (long-chain alcohol), ethanol, ethylene glycol, Fantastic, formamide, Fomblin brand pump oil, GoJo cleaner (kerosene derivative), hexane, hydrazine dihydrochloride, hydrazine hydrochloride, hydroxylamine chloride,

Table 4. Use of RCRA-Regulated Inorganic Chemicals in TA-55 Processes

Inorganic chemicals and P/S codes in which they were used	**The following summarizes the applicability of RCRA D-listings and P-listings due to metals used in the processes:**
Hydrogen peroxide	D001 (ignitability—oxidizer) and D003 (reactivity) do not apply to the use of hydrogen peroxide because there are no free liquids in the TRU solid waste
Lead hydroxide, oxide, or nitrate (P/S code AD)	D008 (lead) applies to P/S code AD.
Mercuric nitrate (P/S codes VP1 and VP3)	D009 (mercury) applies to P/S codes VP1 and VP3. Mercuric nitrate is used as a catalyst in P/S code VP1; the hydroxide cake produced in VP1 is processed in P/S code VP3.
Potassium dichromate (P/S codes AD, CS, CSE, DO, and SE)	D007 (chromium) applies to P/S codes AD, CS, CSE, DO, and SE because of the use of potassium dichromate as a titration endpoint indicator until end of 1993. The solution and precipitates were processed by hydroxide precipitation under the same codes. The chromium was incorporated as a contaminant in the hydroxide cakes.
Silver nitrate and other silver salts (P/S codes AC1, CPOD, CS, CSE, DO, SE)	D011 (silver) applies to P/S codes CW and CX due to the use of silver nitrate for chloride titrations under P/S codes CS, CSE and SE until 1993. The solution and precipitates were processed by hydroxide precipitation under P/S codes CW and CX.. Silver was incorporated as a contaminant in the hydroxide cakes. D011 (silver) applies to P/S code CPOD due to the use of silver nitrate as a catalyst from 1990 to 1994. D011 (silver) applies to P/S code AC1 due to the use of silver salts.
Sodium chromate (P/S code PT)	D007 (chromium) applies to P/S code PT due to the use of sodium chromate in the separation of thorium from plutonium and americium.
Uranium nitride, depleted (P/S code FF)	D003 (reactivity) does not apply to the use of uranium nitride in P/S code FF. Although this chemical is pyrophoric, its disposal in an oxic environment eliminates this characteristic because it is converted to uranium oxide. Uranium nitride is oxidized in the passivation furnace (P/S code PA) prior to discard.
Vanadium pentoxide (P/S code SS)	P120 (vanadium pentoxide) applies to waste generated under P/S code SD from February to March 1998, and under P/S code SS from May 27, 1998 to June 10, 1998.

oxidizing

Inorganic compound

~~hydroxylamine~~ nitrate, ion exchange resin, isopropanol, kerosene, Metalprep 79 (phosphoric acid-based metal cleaner), MolyKote, n-dodecane, Nuetracleaner #1, Nuetracleaner #2, octylphenyl diisobutyl carbamoylmethyl phosphine oxide (CMPO), oil (engine), organic liquid emulsifier, perchlorocarbons, phenolphthalein, phosphate buffer solution, phosphine oxide, phthalate buffer solution, polyethylene glycol, polyoxyethylene-20-sorbitan laurate (surfactant), SF-2I (as coolant), silicon adhesive, silicon defoamer, sodium citrate retarder, sodium dithionate, sugar, surfactants, tetraethylamine hydrochloride, tetraethylamine hydroxide, tetraethylammonium hydroxide, ~~(tetrahydrofuran)~~ Texaco Regal 32 oil (cutting oil), thionyl chloride, tributyl phosphate (TBP), tributyl phosphate (TBP)/Isopar (isoparaffinic hydrocarbon solvent), tributyl phosphate and iodine in kerosene, trioctylphosphine oxide (TOPO), urea, vactra oil, vacuum grease, vacuum pump oil, WD-40, and Windex.

move to Inorganic list

Several organic chemicals used in TA-55 processes are identified in 40 CFR Part 261 or in Appendix VIII of that regulation as having hazardous characteristics. Table 5 lists these chemicals, their HWNs, P/S codes in which they were used, and the applicability of the HWNs to the use of these chemicals in TA-55 processes.

4.0 DIVISION OF THE WASTE STREAM INTO LOTS

~~One substream, denoted TA-55-19A, is segregated from TA-55-19. This substream is defined as waste generated between 02/01/98 and 06/10/98 that is assigned the P listing of P120.~~

(vanadium pentoxide)

5.0 CORRELATIONS BETWEEN WASTE STREAMS

Waste Streams TA-55-19 and TA-55-20 have been discussed together in this AK Summary Report. These waste streams are similar in physical form and waste material content ~~of the wastes.~~ They differ only in that TA-55-19 is assigned EPA HWNs based on P/S code information, whereas TA-55-20 contains non-mixed waste. Other waste streams resulting from the same plutonium processing activities at TA-55 but differing in waste matrix code are listed in the Sampling Plan.

6.0 ASSIGNMENT OF WASTE MATRIX CODES

The waste matrix code S5300 is assigned to the waste streams TA-55-19 and TA-55-20 based on waste generation practices described in the TA-55 Waste Management Procedure, 1996 (TWCP-351), description of past segregation practices (TWCP-701, Section 2.1, page 4 of 43), and TA-55 process AK reports (TWCP-AK-2.1-002, ~~R.1~~; TWCP-AK-2.1-003, ~~R.1~~; TWCP-AK-2.1-004, ~~R.1~~; TWCP-AK-2.1-005, ~~R.1~~; TWCP-AK-2.1-006, ~~R.1~~; and TWCP-AK-2.1-007, ~~R.1~~). A more detailed waste matrix code can

Table 5. Use of RCRA-Regulated Organic Chemicals in TA-55 Processes

Organic Chemical and P/S Codes in Which It Was Used	Comments on Applicability of RCRA Codes
Acetone (P/S codes FF, ME, and MOX)	• F003 applies to P/S code ME because it may have been used in the glovebox for cleaning. • F003 does not apply to P/S code FF or MOX because it was only used outside the glovebox.
Benzene (P/S codes AC, AC1, AC2, and SA)	• D018 (benzene) applies to P/S codes AC, AC1, AC2, and SA • F005 applies to P/S codes AC, AC1, AC2, and SA, in which benzene was used as a solvent
Carbon tetrachloride (P/S codes AD, CV, PTP, and PX)	• D019 (carbon tetrachloride) applies to P/S codes AD, CV, PTP and PX. This chemical was used in PTP between 1/87 and 6/89. • F002 does not apply to P/S codes AD, CV, PTP, or PX because it was not used as a solvent or for degreasing.
Chloroform (P/S codes AC, AC1, AC2, APD, FF, and XO)	• D022 (chloroform) applies to P/S codes AC, AC1, AC2, APD, FF and XO. Concentrations in P/S code FF are expected to be below RCRA threshold because freeze-drying should have removed most, if not all, of the residual chloroform before the microspheres were taken into the glovebox for sintering.
Diethyl ether (P/S code SA)	• F003 applies to P/S code SA because of solvent use.
Freon and Freon TF (P/S codes CA, DA, MA, MW, PD, PF, SCB, SRL, UA, VD, WE and XO)	• F002 applies to P/S codes DA, MA and XO. • F002 does not apply to P/S codes CA, MW, PD, SCB, SRL, UA, VD and WE. Although Freon TF is used as a solvent to clean metal parts, the parts are routinely air-dried to avoid the need for cellulosic wipes. • F002 does not apply to P/S code PF because Freon was used as a coolant for a cutting saw.
Methanol (P/S codes AD and SO)	• F003 applies to P/S code AD because it may have been used for cleaning inside the glovebox. • F003 does not apply to P/S code SO because it was used in a cold trap outside the glovebox.
Methylene chloride (P/S code AC1)	• F002 applies to P/S code AC1 because this chemical was used as a paint stripper.
Methyl ethyl ketone (P/S codes MA and XO)	• D035 (methyl ethyl ketone) applies to P/S codes MA and XO • F005 applies to P/S codes MA and XO, in which methyl ethyl ketone was used as a paint stripper (XO) solvent (MA) and
Pyridine (P/S codes AC and SA)	• D038 (pyridine) applies to P/S codes AC, AC2 and SA • F005 applies to P/S codes AC, AC2 and SA, in which pyridine was used as solvent.
Tap Magic (contains 1,1,1 trichloroethane) (P/S code MA)	• F002 does not apply to P/S code MA because Tap Magic is used as a metal cutting fluid or coolant, not as a solvent. Its use was discontinued in 1992.

Organic Chemical and P/S Codes in Which It Was Used	Comments on Applicability of RCRA Codes
Tetrachloroethane (not used)	• No RCRA codes apply to tetrachloroethane, an Appendix VIII chemical. Although it is listed on the chemical inventory for metal operations, it was never used in glovebox operations.
Tetrachloroethylene (P/S codes AD, APD, CSE, CV and SE)	• D039 (tetrachloroethylene) applies to P/S codes AD, APD, CSE and SE in which it was used until 1992. • D039 does not apply to P/S code CV because it was used as a coolant outside the glovebox. • F002 applies to P/S codes AD, APD, CSE and SE. Its use as a solvent in P/S code CSE and SE ended in 1992 • F002 does not apply to P/S code CV because it was only used as a coolant outside the glovebox.
Toluene (P/S codes AC, AC2 and SA)	• F005 applies to P/S codes AC, AC2 and SA because toluene was used as a solvent.
Trichloroethylene (P/S codes CK, EL, FF, MA, ME, and XO)	• D040 (trichloroethylene) applies to P/S codes EL, FF, MA, ME, and XO • D040 does not apply to P/S code CK because this chemical was used as a coolant outside the glovebox. • ~~F002~~ F001 applies to P/S code MA, in which trichloroethylene was used during final cleaning of metal parts from 1979 to 1992, resuming again in February 2000. • F002 and F001 does not apply to P/S codes EL or FF, in which it was used as a lubricant for a cutting saw, not as a solvent. or degreaser
Tetrahydrofuran	• U213 applies to P/S codes AC, AC2 and SA

not be assigned to the TA-55-19 and TA-55-20 waste streams because TA-55 waste management personnel did not segregate plastic waste from cellulosic waste.

The following codes also apply to waste streams TA-55-19 and TA-55-20 from the Transuranic Waste Baseline Inventory Report (TWBIR), the TRUPACT II Content Code (TRUCON) (DOE/WIPP-89-004/Rev.13), the Radioactive Solid Waste Disposal (RSWD), and the Item Description Code (IDC) (Sampling Plan).

- TWBIR LA-M16 (TA-55-19) and LA-T16 (TA-55-20)
- TRUCON LA 116A, LA 116B, LA 116C, LA 116D, LA 116E, LA 116F, LA 116H, LA 116I
- ~~RSWD A14, A15, A16, A17, A18, A60~~ slot
- ~~IDC 004 (combustible waste)~~ slot.

copy to AK Summaries

7.0 ASSIGNMENT OF WASTE MATERIAL PARAMETER CODES

The following waste material parameter codes are assigned to waste streams TA-55-19 and TA-55-20 based on (1) waste generation practices described in the TA-55 Waste Management Procedure (TWCP-351); (2) description of past segregation practices

(TWCP-701, Section 2.1, page 4 of 43); (3) TA-55 process ~~acceptable knowledge~~ AK reports (TWCP-AK-2.1-002, ~~R.1~~; TWCP-AK-2.1-003, ~~R.1~~; TWCP-AK-2.1-004, ~~R.1~~; TWCP-AK-2.1-005, ~~R.1~~; TWCP-AK-2.1-006, ~~R.1~~; and TWCP-AK-2.1-007, ~~R.1~~); and (4) waste characterization data from real-time radiography and visual examination:

- Cellulosics
- Plastics (waste materials)
- Rubber
- Steel (packaging materials)
- Plastics (packaging materials)
- Iron-based metals/alloys (<5% by volume)

8.0 ASSIGNMENT OF EPA HAZARDOUS WASTE NUMBERS

8.1 F, K, ~~and~~ and U P Listings

No K-listings apply to any of the debris waste generated by the P/S codes covered by this report.

The following P/S codes require HWN assignments due to the presence or use of F-listed chemicals. In many cases, the applicability of the HWN is limited to waste generated during a specific period of time, as discussed in the appropriate process AK report.

- AC, AC1, AC2, AC3 — F002, F005
- AD — F002, F003
- APD — F002, F003
- CF — F002, F003
- CLS — F002, F003
- CSE — F002
- CW — F002, F003
- ~~CXL — F002, F003~~
- DA — F002
- HP — F002, F003 — stet
- MA — F001, ~~F002~~, F005
- SA — F002, F003, F005
- SE — F002
- WM, X0, XO — F001, F002, F005

In addition, debris waste generated under P/S codes SD and SS between 02/01/98 and 06/10/98 are assigned EPA HWN P120 (vanadium pentoxide).

Because waste items from any of these P/S codes may be present in any given container of combustible debris waste, waste stream TA-55-19 is conservatively assigned the F-listings of F001, F002, F003, and F005. TA-55-19A is segregated

Waste generated under P/S codes AC, AC2 and SA are assigned EPA HWN U213 (tetrahydrofuran)

for waste with the P-listing of P120. Waste containers assigned to waste stream TA-55-20 only contain items with known P/S codes that do not carry any EPA HWNs.

The reliability of this AK information can be assessed in part based on a review of headspace gas analyses (~~not~~ WIPP-compliant) for 60 containers assigned to waste stream TA-55-19 (~~Table~~ Section 6). Measured gas concentrations were above the program required quantitation limit (PRQL) for several regulated volatile organic compounds: acetone, ethyl benzene, methanol, methylene chloride, methyl ethyl ketone, toluene, and xylenes. These results are consistent with the AK information summarized in this waste stream report.

8.2 Toxicity Listings

TA-55-19 (including TA-55-19A) is conservatively assigned the D-listings of D004, D005, D006, D007, D008, D009, D010, D011, D018, D019, D021, D022, D035, D038, D039, and D040. TA-55-20 has no listings.

No D-listings are applicable to combustible debris waste generated by the following P/S codes: AC3 (inactive), ACC, AO (Assembly Operation), AO (Americium Processing Calcination), ARI, BA, BAC, BC, BL, BM, BT, CA, CC, CH, CN, CO, COD, CR, CRD, CT, DF, DOP, DP, DT, ELW, EM, EVAC, FA, FC, FSPF, GI, GMS, HC, HG, HRS, ID, IN, ITF, ITF4, JA, LC, LIBS, MAG, MAS, MBC, MF, MO, MOX, MP, MW, NCD, NEPTUNIUM, NR, OB, OM, OR, OY, PA, PAF, PD, PF, PH, PI, PIG, PPD, PR, PS, RAP, RAP2, RB, RBJ, RCM, RD, RFX, RL, RM, RS, SBB, SCB, SMP, SRL, SX, TIGR, UA, UPS, US, US2, VD, VP2, VS, WE,WLT, and ZD.

Based on information in the TA-55 process AK reports, combustible debris waste generated by the following P/S codes are conservatively assigned EPA HWNs due to the potential presence of D-listed constituents. In many cases, the applicability of the HWN is limited to waste generated during a specific period of time, as discussed in the appropriate process AK report. If a D-listed constituent is known to be present in the waste at some level, the D-code is conservatively assigned unless analytical data confirm that its concentration is below the regulatory level.

Table 6. Preliminary Headspace Gas Data For 60 Drums Assigned To Waste Stream TA-55-19

	AK information			Preliminary headspace gas analyses for VOCs			
ANALYTE	Chemical used in processes	Chemical present in process feed solution	EPA HWN assignment	MDL (ppmv except for hydrogen and methane)*	Mean concentration is above MDL	PRQL	UCL_{90} analysis indicates presence above PRQL
Acetone	X	X	F003	16.12	X	100	X
Benzene	X		F005, D018	1.96	X	10	
Bromoform			None apply	2.27		10	
Butanol (n-butyl alcohol)			None apply	8.78	X	100	
Carbon Tetrachloride	X	X	D019	2.00	X	10	
Chlorobenzene		X	F002, D021	1.93	X	10	
Chloroform	X	X	D022	1.85	X	10	
Cyclohexane			---	1.88	X	10	
1,1-Dichloroethane			---	1.78		10	
1,2-Dichloroethane			---	2.40		10	
1,1-Dichloroethylene	X		None apply	2.74	X	10	
cis-1,2-Dichloroethene			None apply	2.06	X	10	
Ethyl benzene	See Note		F003	1.72	X	10	X
Ethyl ether	X		F003	1.30	X	10	
Hydrogen			---	0.02 % vol	X	0.1	
Methane	X		---	0.02 % vol	X	0.1	
Methanol	X	X	F003	11.42	X	100	X
Methyl ethyl ketone	X		F005, D035	18.42	X	100	X
Methyl isobutyl ketone			None apply	16.05	X	100	
Methylene chloride	X	X	F002	1.97	X	10	X
1,1,2,2-Tetrachloroethane			None apply	1.63	X	10	
Tetrachloroethene	X	X	F002, D039	1.44	X	10	
Toluene	X	Foot	F005	1.67	X	10	X
1,1,2-Trichloro-1,2,2-trifluoroethane (also known as Freon TF and Freon 113)	X		F002	1.79	X	10	
1,1,1-Trichloroethane	X		None apply	1.82	X	10	
Trichloroethene	X		F002, D040	1.31	X	10	
1,2,4-Trimethylbenzene			---	2.04	X	10	
1,3,5-Trimethylbenzene			---	2.26	X	10	
Xylene (m and p-xylene)		X	F003	3.62	X	10	X
Xylene (o-xylene)		X	F003	1.9	X	10	X

Abbreviations: AK, acceptable knowledge; HWN, Hazardous Waste Number; MDL, Minimum Detection Limit; PRQL, Program-Required Quantitation Limit; VOC, Volatile Organic Compound

--- This chemical is not regulated under 40 CFR Part 261, Subparts C and D, nor is it listed in Appendix VIII of that regulation.

* These MDL values are from the MDL study dated 6/19/00 (TWCP-3248). Different MDL values would have been in effect at the times that the data included in this table were acquired, so the above MDL values should only be considered as an approximate guide.

NOTE: There is no record documenting the use of ethyl benzene under any of the P/S codes covered by this report. However, recent analyses of some vacuum pump oils from TA-55, PF-4, showed it to be present. Consequently, F003 is applicable to this waste stream. Other constituents on the above table that were identified in these analyses included acetone, benzene, chlorobenzene, 1,2-dichloroethane, tetrachloroethene, toluene, Freon-113, trichloroethene, 1,2,4-trimethylbenzene, 1,3,5-trichlorobenzene, m- and p-xylene, and o-xylene.

AC, AC1, AC2	D007, D009, D011, D018, D022 D038
AC1	D007, D009, D011, D018, D022
AC2	D007, D009, D011, D018, D022 D038
ACD	D005, D006, D007, D008, D011
ACL	D007, D009
AD	D004, D005, D006, D007, D008, D009, D010, D011, D019, D039
AL	D005, D006, D007, D008, D011
AP	D007, D009
APD	D007, D008, D009, D019, D021, D022, D039
AS	D006, D007, D008, D011
AT	D005, D006, D007, D008, D011
ATL	D005, D006, D007, D008, D011
AX	D007, D009
BF	D006, D007, D008, D011
BU	D006, D007, D008, D011
CD	D006, D007, D008, D009, D011
CF	D007, D008, D009, D011, D019, D021, D022, D039
CK	D005, D006, D007, D008, D009, D011
CL	D007, D008, D009
CLRD	D007, D008, D009
CLS	D007, D008, D009, D019, D021, D022, D039
COL	D005
CPOD	D011
CS	D007, D008, D009
CSE	D007, D008, D009, D039
CV	D005, D006, D007, D008, D009, D011, D019, ~~D039~~
CW	D007, D008, D009, D011, D019, D021, D022, D039
CX	D007, D008, D009, D011
CXL	D007, D008, D009, ~~D019, D021, D022, D039~~
DO	D007, D011 (no D-listings apply after 1993)
DS	D006, D007, D008, D009, D011
ED	D005, D006, D007, D008, D011
EDC	D007, ~~D008~~
EL	D040
EOC	D007, D009
ER	D006, D008
ETD	D005, D006, D007, D008, D011
EV	D006, D007, D008, D009, D011

DOP → DS
D008

EXT	D005, D006, D007, D008, D009, D011
FDL	D004, D005, D006, D007, D008, D009, D011 D010
FF	D022, D040
FLU	D004, D005, D006, D007, D008, D009, D011 D010
FX	D006, D007, D008, D009, D011
HCD	D006, D007, D008, D009, D011
HD	D006, D007, D008, D009, D011
HGMS	D006, D007, D008, D009, D011
HP	D007, D008, D009, D011, D019, D021, D022, D039
IA	D006, D007, D008, D009, D011
IAM	D005, D006, D007, D008, D011
IB	D005, D006, D007, D008, D009, D011
ICP	D007, D009
IE	D005, D006, D007, D008, D009, D011
IS	D005, D006, D007, D008, D011
IX	D006, D007, D008, D009, D011
KBTF	D008
LD	D007, D008, D009
LG1	D006, D008
LG2	D006, D007, D008, D009, D011
LI	D005, D006, D007, D008, D009, D011
LR	D006, D007, D008, D009, D011
MA	D035, D040
MB	~~D005~~, D007, D008, D009
ME	D007, D040
MELL	D006, D007, D008, D009, D011
ML	D006, D008
MPD	D005, D006, D007, D008, D011
MS	D007, D008, D009
NC	D006, D008
NL	D006, D008
OD	D006, D007, D008
OH	D006, D007, D008, D009, D011
PB	D007, D008, D009
PCH	D007
PE	D004 (1984-85)
PK	D006, D007, D008, D011
POSM	D007, D011
PRR	D007, D009

PT	D007
PTP	D019
PTS	D005, D006, D007, D008, D011
PUB	D007, D008, D009
PX	D006, D008, D019
RA	D005 (applies only to zinc metal buttons)
RASS/RSS	D004, D005, D006, D007, D008, D009, D010, D011, D019
RC	D005, D006, D007, D008, D011
RO	D006, D008, D040
RR	D006, D007, D008, D009, D011
SA	D007, D009, D018, ~~D038~~ set
SB	D005, D006, D007, D008, D011
SC	D005, D006, D007, D008, D011
SE	D007, D008, D009, D039
SL	D005, D006, D007, D008, D011
SO	D004, D005, D006, D007, D008, D009, D010, D011
SP	D007
SS	D006, D008
SSD	D006, D007, D008
SSMD	D009 (D listing applies only from 6/94 - 8/94)
STF	D007
TDC	D005, D006, D007, D008, D011
VC	D006, D008
VP1, VP3	D009 (D listing applies only from 7/85 to 10/85)
VU, VUL	D005, D008
* WM, X0, XO	D007, D008, D009, D022, D035, D040
XES	D004, D005, D006, D007, D008, D009, D010, D011
XP	D004, D005, D006, D007, D008, D009, D010, D011

* Conservative

8.3 Corrosivity, Reactivity, and Ignitability

TA-55-19 has no listings for corrosivity, reactivity, or ignitability.

TA-55-19A has no listings for corrosivity, reactivity, or ignitability.

TA-55-20 has no listings for corrosivity, reactivity, or ignitability.

See Section 10.0

done.

Add, Global statement to

HRA ignore

9.0 DETERMINATION OF THE RADIOISOTOPIC COMPOSITION

See Section 3.5.2.

10.0 VERIFICATION THAT IGNITABLE, REACTIVE, AND CORROSIVE WASTES WERE EXCLUDED

According to the WIPP WAP, "The prohibition of liquids and containerized gases prevents the shipment of corrosive, ignitable, or reactive wastes." Administrative controls on waste packaging were in place at various times to ensure the absence of such items from the waste stream.

- Liquids were prohibited from solid waste streams at TA-55 when the facility opened in January 1978. A waste management procedure written to cover operations at the new facility, *TA-55 Standard Operating Procedure (SOP) 406-GEN-R00*, stated that "Liquids are not permitted in any container of solid waste materials" (TWCP-3943).
- Chemical Waste Disposal Requests (see Attachment 5) introduced in June 1980 included check boxes which the waste generator was required to check if the waste contained corrosive acids or bases, or pyrophoric, flammable, corrosive, explosive, toxic, carcinogenic or highly reactive materials.
- The Certification Plan (TWCP-697) and related Generator Attachments (TWCP-701) (see Attachment 4, pp 4 and 5) were implemented in 1987. Waste generators were required to sign a statement on the WODF documenting that the waste contained "no free liquids, pyrophorics, explosives, compressed gases, powders or materials other than the indicated matrix." Checkboxes were also present for indicating the presence or absence of corrosive chemicals. Full implementation of this generator statement occurred in May 1987.
- Waste management inspectors perform visual examination of the waste prior to its initial packaging, thus allowing the inspectors to verify the generator's WODF statement (TWCP-701, Sections 3.8.5 to 3.8.6).
- Explosives were prohibited from TA-55 until installation of the Impact Test Facility in the early 1990s.
- The Waste Profile Request Form (WPRF), which has been in use at LANL since 1991, includes a statement which must be authenticated by the waste generator, that the waste is not ignitable (flash point >200°F), reactive, or corrosive.
- The TA-55 Generator Attachments to the Certification Plan were updated in 1995 (TWCP-700) but the prohibition on liquids in the waste, and the waste management inspection, remained in effect.

check w/ OO2.

see June's note 1/22 and AK-02.

Hence, since the inception of operations at TA-55, corrosive and reactive wastes have been excluded from TA-55 solid wastes through the prohibition of liquids.

WPRF in OO2

absorbed onto Kitty Litter, and discarded in an appropriate waste stream)

The absence of these prohibited items is verified through radiography of each waste container and visual examination of selected containers during TWCP characterization activities. Any free liquids are remediated, or containerized gases that are found to be present are removed, or the container is tagged as non-compliant by filing a Prohibited Waste Report in accordance with *Nonconformance Reporting and Tracking* (TWCP-QP-1.1-007).

Intro ? sentence on Compatible

11.0 VERIFICATION THAT INCOMPATIBLE CHEMICALS WERE PROHIBITED

Section 10.0 summarizes administrative controls in place at TA-55 that prohibit incompatible chemicals in the waste, and measures taken to verify their absence. In addition, all waste containers shipped from TA-55 to TA-54 for storage were evaluated for potentially incompatible chemicals in accordance with 49 CFR Subpart C—Segregation and separation chart of hazardous materials; Section 177.848, Segregation of hazardous materials, and were determined to be in compliance with this requirement.

For waste that has been generated after the implementation of the 1987 Certification Plan, Generator Attachments, waste generators signed a statement on the WODF for each waste items specifying that the waste contained "no free liquids, pyrophorics, explosives, compressed gases, powders or materials other than the indicated matrix." Prior to the installation of the Impact Test Facility in the early 1990s, explosives were prohibited from TA-55. In addition, waste management inspectors performed visual inspection of the waste prior to its initial packaging, thus allowing the inspectors to verify the generator's WODF statement.

A chemical compatibility analysis was performed for TRUCON codes 116/216 (combustible waste) which indicated that all chemicals and the waste matrix were compatible at levels greater than trace amounts (DOE/WIPP-89-004). During the process AK search, additional chemicals were identified and ~~are listed in~~ Section 3.5.3; a new compatibility analysis is underway, but since these additional chemicals are all in trace quantities in the TA-55-19 and TA-55-20 waste streams, no incompatibilities should exist.

(Content Code Assessments for LANL TRUCON Codes)

12.0 VERIFICATION THAT THERE ARE NO COMPRESSED GASES, FREE LIQUIDS, NONRADIONUCLIDE PYROPHORICS, SEALED CONTAINERS GREATER THAN FOUR LITERS IN VOLUME, OR >1% RADIONUCLIDE PYROPHORICS

Most gases used at the TA-55 Plutonium Facility are stored outside the building and the gas is plumbed into the glovebox from outside the building (TWCP-4164). Occasionally, a lecture bottle may have been used for a process inside the building, but these bottles were kept outside of the glovebox with the gas plumbed into the glovebox. Consequently, compressed gas cylinders or containers are not expected to be in any of the TRU wastes generated by TA-55 operations.

Spray cans, especially WD-40, were in common use in TA-55 gloveboxes until May 1992 (TWCP-4166). These were routinely discarded as metal debris waste. From 1988 until May 1992, the protocol was to vent or puncture the spray cans inside the glovebox; venting was indicated by inserting a metal wire into the valve. After May 1992, spray cans were no longer used in gloveboxes.

Absorbed

Verification that individual waste drums do not contain compressed gases, free liquids, or sealed containers greater than 4 L in volume is obtained from radiography of each waste container and visual examination of selected containers during TWCP characterization activities. Any free liquids are remediated, and any sealed containers greater than 4 L in volume, or unpunctured or unvented gas containers, are removed; or else the container is tagged as non-compliant by filing a Prohibited Waste Report in accordance with *Nonconformance Reporting and Tracking* (TWCP-QP-1.1-007).

Administrative and procedural controls on the prohibited pyrophorics in TRU waste and the absence of pyrophorics has been verified through testing.

For items of pyrochemical salt waste, the procedures of oxygen sparging and/or carbonate oxidation have been used since May 1987 to ensure that pyrophorics were oxidized. In addition, screening tests on similar pyrochemical salts and residues (which contain higher amounts of plutonium) at the Rocky Flats Environmental Technology Site (TWCP-2501) have shown (1) no autoignition, (2) no spontaneous combustion, and (3) no sparking. Experimental results on the reactivity of LANL direct oxide reduction (DOR) salt with water and the reactivity in air of heated calcium metal nodules from DOR salts indicate the absence of "dangerous when wet materials" and pyrophoricity in these salts (TWCP-3730, TWCP-3731, TWCP-3732).

Chemical Waste Disposal Requests dated as early as June 1980 included boxes that were required to be checked if the waste contained pyrophoric, flammable, corrosive, or explosive materials (see Attachment 5, Chemical Waste Disposal Request).

In addition, for wastes generated after the implementation of the 1987 Certification Plan, Generator Attachments, associated waste packaging procedures, and quality assurance systems, the waste generator has signed a statement on the WODF for each waste item stating that waste contains "no free liquids, pyrophorics, explosives, compressed gases, powders or materials other than the indicated matrix." The TA-55 Attachment to the Certification Plan describes how these restrictions were verified by waste management personnel (TWCP-701, Sections 3.8.5-3.8.7).

13.0 VERIFICATION THAT THERE ARE NO POLYCHLORINATED BIPHENYLS (PCBs) IN THE WASTE STREAM

No PCBs were introduced into ~~TA-55 pr~~ocesses as documented in the TA-55 procedures reviewed during this AK search (reports (TWCP-AK-2.1-002, R.1; TWCP-AK-2.1-003, R.1; TWCP-AK-2.1-004, R.1; ~~TWCP-AK-~~2.1-005, R.1; TWCP-AK-2.1-006, R.1; and

TWCP-AK-2.1-007, R.1) and summarized in the process inputs listed in Tables 1 and 4. Oils used in the reviewed processes include vacuum pump oils, and cutting fluids used for cooling purposes; none of these oils are known to contain PCBs. All transformers known to contain PCBs have been tracked from the time of startup of TA-55 in 1978. Whenever any transformer oil is drained, it is handled by a subcontractor who is wholly responsible for its disposal (TWCP-AK-2.1-005, R.1, Section 9.0). This oil does not enter the LANL disposal operations.

14.0 DETERMINATION THAT THERE IS NO ASBESTOS IN THE WASTE

Asbestos heating mantles were never used at TA-55. Asbestos gloves were used in glovebox operations in P/S codes OR, PX, and RM (TWCP-4162, TWCP-4166), which are discussed in *Process Acceptable Knowledge Summary Report for Pyrochemical Processes at TA-55* (TWCP-AK-2.1-006, R.1) and *Process Acceptable Knowledge Summary Report for Special Processing at TA-55* (TWCP-AK-2.1-007, R.1), respectively. Asbestos-bearing transite was widely used until recently for thermal insulation, including as a coverplate over the furnace in glovebox wells, and as part of end plates on Lindberg furnaces. Although many Lindberg furnaces have been replaced with newer asbestos-free furnaces, some are still in use at TA-55. The transite would have been disposed either as metal or as ceramic and glass waste streams.

15.0 DETERMINATION OF THE MAXIMUM NUMBER OF CONFINEMENT LAYERS PERMITTED FOR WASTE PACKAGING

Waste streams TA-55-19 and TA-55-20 are primarily generated from operations performed in gloveboxes. The waste material is placed directly into bag-out bags (also called inner bags) through an opening in the glovebox where the bag is attached, and the bag is then closed and detached from the glovebox. Waste streams TA-55-19 and TA-55-20 may also be generated from "hot jobs" outside of the glovebox, such as valve changes, or from decontamination of spills or other releases. In these cases, the waste is placed directly into one (or possibly more) inner bags at the work area. The maximum number of confinement layers in any case is six (TWCP-816).

A minor source of waste streams TA-55-19 and TA-55-20 is room trash that was originally considered to be low-level waste, which is collected in plastic bags inside cardboard boxes. Occasionally, when assayed, these boxes are determined to be TRU waste. These boxes may be sorted to remove the "hot" item, or the whole box may be bagged and sent to the TRU packaging area for placement in drums containing waste streams TA-55-19 or TA-55-20, as appropriate. When this occurs, the P/S code WM is assigned to the waste. Due to the additional layers of plastic that are present when this operation occurs, drums with the P/S code WM are assumed to contain up to two more layers of internal packaging than other drums.

Waste drum packaging procedures for waste streams TA-55-19 and TA-55-20 have gone through several changes since the beginning of operations at TA-55. TRUCON Code

assignments made by the waste generator are compiled in the Sampling Plan. However, in the absence of this information, TRUCON Codes will be assigned to the waste container in accordance with the default packaging configurations and associated TRUCON codes shown in Table 7, that reflect the packaging protocols in effect during different periods of time at TA-55 (TWCP-816).

Table 7. Maximum Layers of Confinement for be Used for TA-55-19 and TA-55-20 Waste Containers in the Absence of More Specific Waste Characterization Data

Time Frame	P/S Code	Layers of Confinement*	TRUCON Code
01/78–05/87	all	Maximum of 6 layers: • up to 4 inner bags • up to 2 liner bags • all bag closures by either twist & tie; or twist, tie & tape	LA 116 I
05/87–01/97	all except WM, XO	Maximum of 4 layers: • up to 2 inner bags • 2 liner bags • bag closures by either twist & tie; twist, tie & tape, folded and taped, or folded	LA 116 A
05/87–present	WM, XO	Maximum of 6 layers: • up to 4 inner bags • 2 liner bags • bag closures by either twist & tie; twist, tie & tape, folded and taped, or folded	LA 116 I
01/97–present	all except WM, XO	Maximum of 1 layer: • 1 carbon-filter vented inner bag (if initial bag is breached, bag is placed in second bag and first bag is slit open), closed by either twist & tie; or twist, tie & tape • 2 liner bags, folded, no closure	LA 116 E

* Layers of confinement for these TRUCON Codes are defined in DOE/WIPP-89-004

check description

not closed?

Insert new Section on Re Confirmation

confirmation of AK and data,

10.0 CITED PROCEDURES AND REQUIREMENTS DOCUMENTS

- ~~40 CFR Part 260—Hazardous Waste Management System: General~~
- 40 CFR Part 261—Identification and Listing of Hazardous Wastes
- 49 CFR Subpart C—Segregation and separation chart of hazardous materials. Section 177.848, Segregation of hazardous materials
- *Los Alamos National Laboratory Transuranic Waste Characterization Sampling Plan* (TWCP-PLAN-0.2.7-001,R.3)
- Nonconformance Reporting and Tracking (TWCP-QP-1.1-007)
- *Process Acceptable Knowledge Summary Report for Chloride Operations at TA-55* (TWCP-AK-2.1-002, R.1)
- *Process Acceptable Knowledge Summary Report for Metal Operation Processes at TA-55* (TWCP-AK-2.1-003, R.1)
- *Process Acceptable Knowledge Summary Report for Miscellaneous Operations at TA-55* (TWCP-AK-2.1-004, R.1)
- *Process Acceptable Summary Report for Nitrate Operations at TA-55* (TWCP-AK-2.1-005, R.1)
- *Process Acceptable Knowledge Summary Report for Pyrochemical Processes at TA-55* (TWCP-AK-2.1-006, R.1)
- *Process Acceptable Knowledge Summary Report for Special Processing at TA-55* (TWCP-AK-2.1-007, R.1)
- *Transuranic Package Transporter (TRUPACT)-II Content Codes* (DOE/WIPP-89-004)
- *Waste Analysis Plan, to the Hazardous Waste Facility Permit Issued to the Waste Isolation Pilot Plant* (EPA No. NM4890139088, Attachment B)
- *Waste Characterization Data Reconciliation with Acceptable Knowledge* (TWCP-DTP-1.2-064)

italics

move to AK Roadmap

ACCEPTABLE KNOWLEDGE ROADMAP

Waste Stream: TA-55-~~29~~ 19 and TA-55-20.

Documents are in the TWCP RMDC Center.

TWCP Record No.	Information Category Code	Information	Source	Summary	Limitations
TWCP-351	B	Procedure for waste management practices at TA-55	TA-55 document 539-GEN-R02.	Document describes TA-55 waste management practices for solid and liquid wastes	None
TWCP-352	B	Description of plutonium recovery processes	*Wastes from Plutonium Conversion and Scrap Recovery Operations*, LA-11069-MS, March 1988.	Document describes the Pu residues and the various treatment approaches used in recovering plutonium from scrap	Document does not give information about RCRA constituents introduced or present in the processes
TWCP-697	C	Waste was controlled to meet WIPP WAC requirements as early as 1983.	Los Alamos Certification Plan, 1983	Waste was controlled to meet WIPP WAC requirements as early as 1983. Generator Attachments were used to describe and reference specific generator procedures.	Overview document - Generator Attachments provide more detailed information.
TWCP-698	B	Gives Material Type compositions	NMT Memo, NMT-7 WM/EC-96-032 Benchmark Environmental Corp. Memo, AL-7193 BEC	Gives Material Type compositions	Does not give information on how material may fractionate in TA-55 waste processes.
TWCP-700	C	*Generator Attachment* to the *Certification Plan*	*TA-55 Attachment, 1955*, TRUWM-TA55-CPA-03, R00	Documents controls to meet WIPP WAC were implemented and how independent verification was accomplished.	Information is not extremely detailed.
TWCP-701	C	*Generator Attachment* to the *Certification Plan*	*TA-55 Attachment, 1987*, TRU-MST12-CPA-03,R00	Documents controls to meet WIPP WAC were implemented and how independent verification was accomplished.	Information is not extremely detailed.

1995?

Add to the roadmap < Trail Sampling plan AK reports

* Information Category Codes: A = forms intended for use in waste certification, B = data from controlled databases and published documents, C = unpublished data, and D = interviews, memos, and letters

TWCP Record No.	Information Category Code	Information	Source	Summary	Limitations
TWCP-816	D	Jim Foxx Interview on Number of Layers of Packaging	C.L. Foxx, Los Alamos National Laboratory	Provides an explanation of why some waste containers may be packaged with 6 layers of confinement	No Direct way to differentiate between and 6 layers of packaging
TWCP-882 (UCNI)	D	Secondary Radionuclides and Toxic Metals in TA-55 TRU Waste	Memo from Jim Foxx	Lists additional radionuclides and metals potentially in waste, subdivided by P/S code. Covers time period from 1978 to present.	Best information available, but it is based on worker recollection because other records are not available.
TWCP-886	C	Color Flow Diagram of Pu-processes at TA-55.	Diagram from Jim Foxx	Indicates that process inputs are thermally treated and that heavy metals from process inputs end up in the nitric acid evaporator bottoms.	Does not indicate solvent input to processes.
TWCP-887	D	Co-mingling of Defense and Non-Defense TRU Waste	Memo from Jim Foxx	Wastes generated from defense and non-defense activities were not segregated at TA-55 through 1997	None
(see June's note 21 TWCP-3240					
TWCP-2501 TWCP-3547/C1-25	B	"Backlog Waste Reassessment Baseline Book, Waste Form 34"	Rocky Flats Environmental Technology Site Report 1995	Page WF34-10 contains results of tests for corrosivity	Tests are on residues rather than waste that is lower in Pu content. Hence they are conservative.
TWCP-3730 (UCNI)	B	Pyrophoricity characterization	Characterization of Direct Oxide Salts (LA-CP-95-0098)	Hydrogen generation and pyrophoricity of DOR salts. Also gives reference for MSE, ER, and Cr-containing salts.	None
TWCP-3731	D	Sodium pyrophoricity in pyrochemical salts	Memo (MST-12-ARO-88-052)	Treatment of sodium in salts is effective	Sodium only
TWCP-3732	C	Experimental data on calcium pyrophoricity in salts	Memo (MST-12-ARO-88-077)	Treatment of calcium in salts is effective	Calcium only
~~TWCP-3941~~ Delete	~~B~~	~~Process AK Report on~~ Miscellaneous Process Operations at TA-55	Process Acceptable Knowledge Report for Miscellaneous Operations at TA-55	Contains all information located on miscellaneous processes at TA-55 from 1978 to the present.	None

* Information Category Codes: A = forms intended for use in waste certification, B = data from controlled databases and published documents, C = unpublished data, and D = interviews, memos, and letters

SIMPLIFIED FLOW DIAGRAMS

Simplified Process Flow Diagram for Chloride Operations

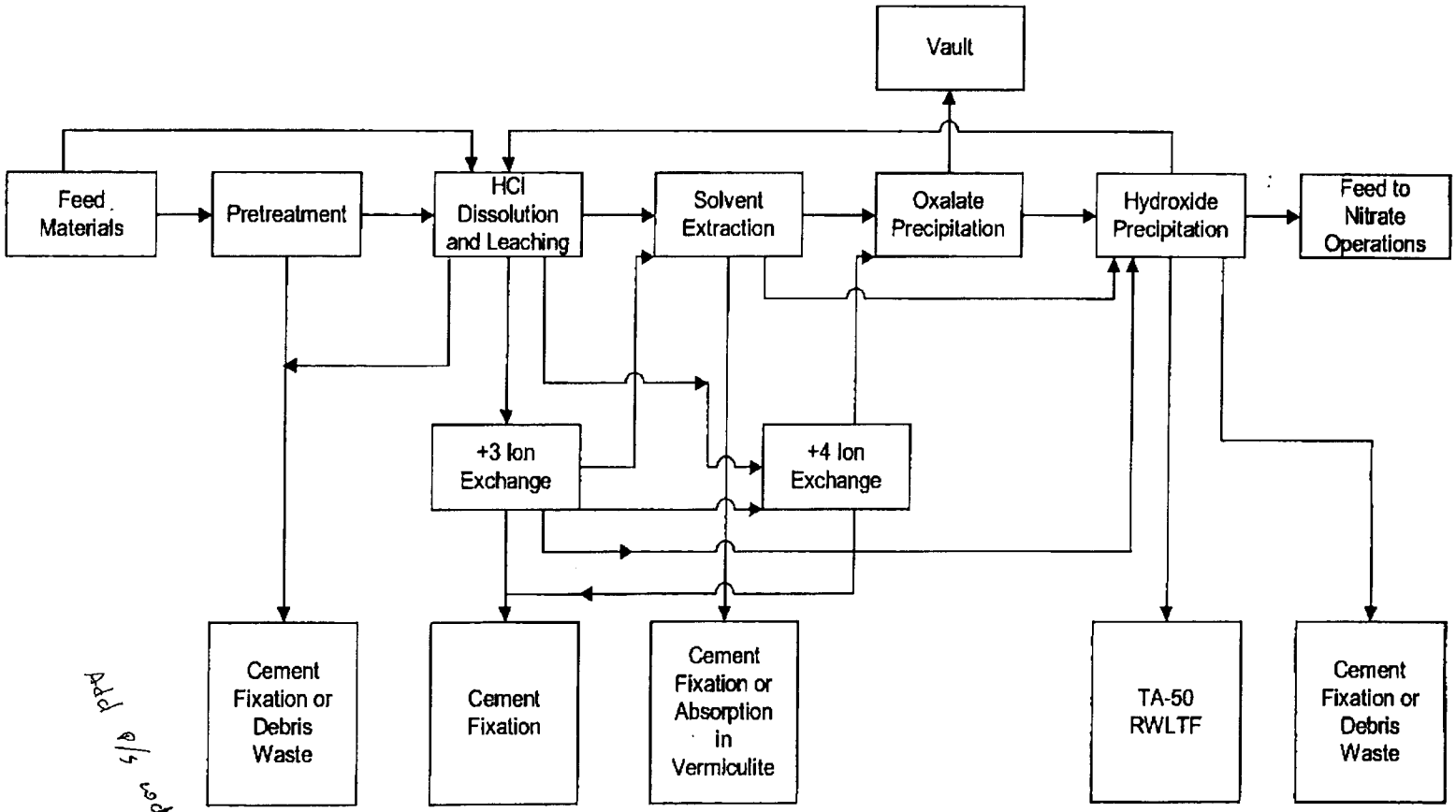

Add P/S codes and a footnote

SIMPLIFIED PROCESS FLOW DIAGRAM:
~~REACTOR FUEL DEVELOPMENT~~
for Metal Operation (continued)

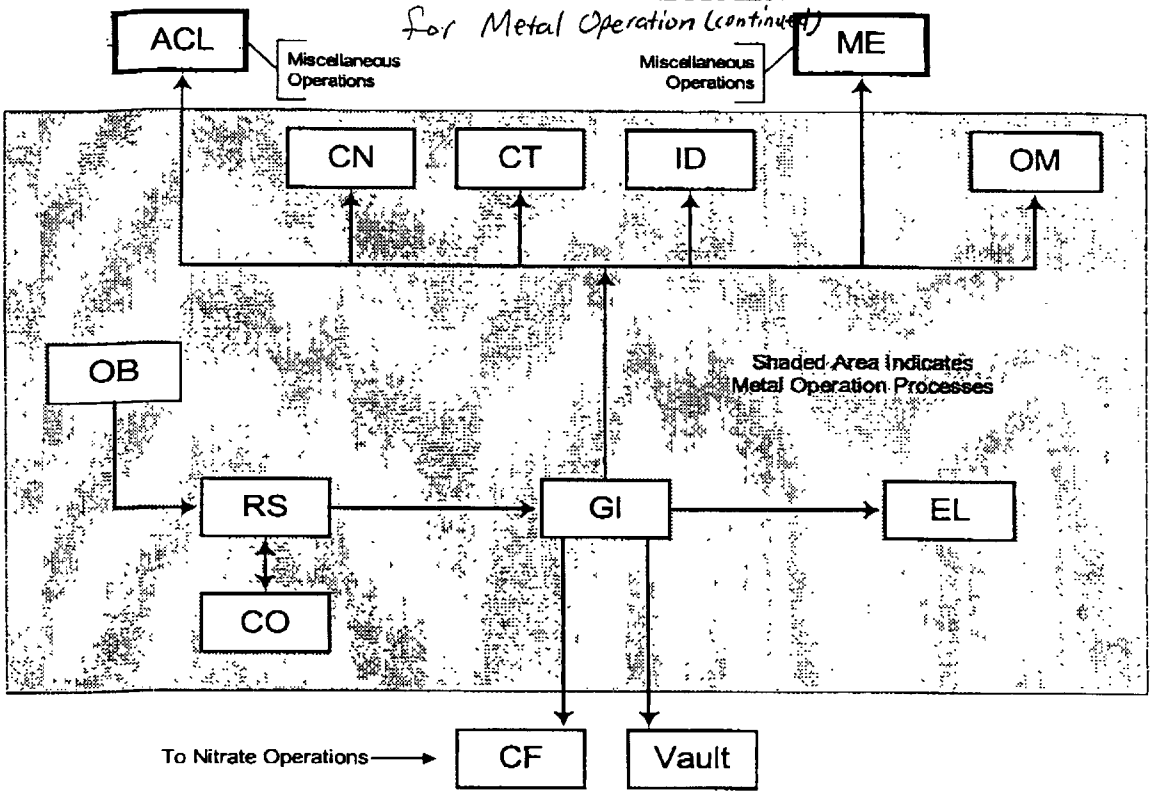

In 1988, P/S codes CO, GI, ID, OB, and RS were combined into P/S code FF. P/S codes CT, ID, and OM are statuses only, and will not generate TRU waste.

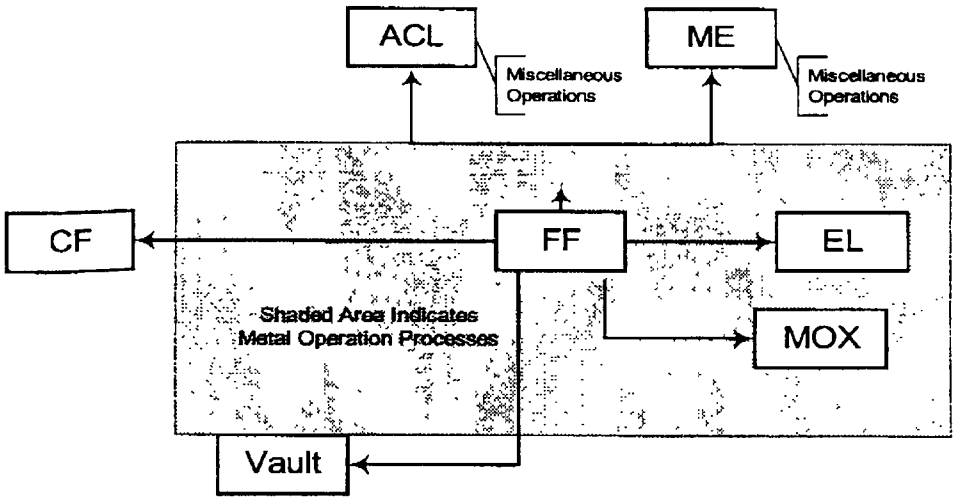

NOTE: All of these P/S codes may obtain feed material from or send product output to the vault.

Attachment 3 - Acceptable Knowledge Source Document Summary

Waste Stream Number(s): LA-CIN01.001, LA-MHD01.001

Site(s): Los Alamos National Laboratory	**Source Document Tracking Number: D023**
Acceptable Knowledge Documentation Type: ☑ TRU Waste Management Program Information ☑ Waste Stream-Specific Information ☑ Supporting Information	**Category:** ☐ C - Correspondence ☑ D - Documents ☐ M - Miscellaneous ☐ P - Procedures ☐ DR - Discrepancy Resolution ☐ U - Unpublished Documents

Title of Source Document: TA-55 Plutonium Facility Acceptable Knowledge Report

Source Document Reference Information (author(s), document and revision number, date, publisher): TWCP-AK-2.1-008, R.2, 05/14/01, LANL

AK # [a]	Source Doc. Page # [b]	AK Information Summary
PR5, WS12	vii	Table: TA-55 Process/Status Code Index: Contains P/S Code, P/S Name, AK Process Report and Primary Report Section in which P/S Code is Described, and RCRA Listings for Combustible Debris
WS1, WS9	xvi-xxiv	Waste stream Number and Title: TA-55-19, Mixed Combustible Debris WasteTA-55-19A, Mixed Combustible Debris Waste with P120, a subset (I.e. lot) of waste stream TA-55-19TA-55-20, Non-mixed Combustible Debris Waste Waste Matrix Code: S5300 (same for all three)
S16	xvi-xxiv	(See limitation at end of this summary) Maximum Layers of Packaging: 6 (same for all three waste streams)
PR6, WS3	xvi-xxiv	Time Period of Generation: TA-55-19, Mixed Combustible Debris Waste: 1978-present, Waste Stream Volume (as stored): 4173 containers (873 m3) (including lot TA-55-19A) Waste Stream Volume (after repackaging): 850 SWBs, 3873 drums (2390 m3) TA-55-19A, Mixed Combustible Debris Waste with P120: 02/98-06/98, Waste Stream Volume (as stored): 12 containers (2.5 m3) Waste Stream Volume (after repackaging): Not yet determinedTA-55-20, Non-mixed Combustible Debris Waste: 1979-present. Waste Stream Volume (as stored): 281 containers (59 m3)Waste Stream Volume (after repackaging): Not yet determined
WS4	xvi	Waste Generasting Processes: (Same for all three waste streams): Plutonium manufacturing, recovery, and research operations at the TA-55 Plutonium Facility, as well as associated maintenance operations, generate TRU wastes. These operations include: Preparation of ultra-pure plutonium metals, alloys, and compounds. Preparation of specific alloys, including casting and machining these materials into specific shapes. Determination of the high-temperature thermodynamic properties of plutoniumReclamation of plutonium from scrap and residues produced by numerous feed sources. Disassembly of components for inspection and analysisManufacturing of parts on a limited basis
PR2, WS7	xvi-xxiv	Defense Waste Status (same for all three waste streams): Defense-related transuranic (TRU) waste. There is no historical record or evidence of spent nuclear fuel or high-level waste ever having been handled at the facility.
WS12	xvi-xxiv	RCRA CharacterizationTA-55-19 is conservatively assigned the following EPA Hazardous Waste Numbers (HWNs). Many of the HWNs are time-dependent, and apply only to containers generated by a particular process over a specific period of time, as documented in process AK reports.F001, F002, F003, F005D004, D005, D006, D007, D008, D009, D010, D011, D018, D019, D021, D022, D035, D038, D039, D040TA-55-19A has the same codes and also P120 (for

SUPERCEDED

Attachment 3 - Acceptable Knowledge Source Document Summary (continued)

Site(s): Los Alamos National Laboratory		Source Document Tracking Number: D023
AK # [a]	**Source Doc. Page # [b]**	***AK Information Summary***
		vanadium pentoxide).
WS11	xvi-xxiv	Radionuclide Content: These waste streams predominantly contain a variety of plutonium material types with different well-defined isotopic compositions. Americium-241, neptuniump237, and uranium-234 may be present at detectable concentrations as decay products of their plutonium precursors. Some of the processes separate plutonium from americium and uranium. The waste will usually be enriched in americium-241 and uranium-234 relative to plutonium, but may also be depleted in some cases. Some waste may contain uranium and its decay products (e.g., uranium-234) from one of several uranium material types used as feed material. In addition, trace levels of cesium-137 and protactinium-231 may be present because of their widespread presence as contaminants in TA-55 operations. Other waste may contain various radionuclides used as feed materials for producing detector materials, including americium-241, americium-243, cerium-144, curium-244, protactinium-231, neptunium-237, thorium-232 enriched in thorium-230, uranium-233, and depleted uranium.
WS5	xxv	See Waste Generation Summary Diagram
WS12	vii-viii	Pg vii contains a table with the TA-55 process/status code index, including the RCRA listings for combustible debris.
WS8, WS12	All	Chemicals identified in report: hydrochloric acid, nitric acid, calcium fluoride, hydrofluoric acid, salts. Acids used in TA-55 are ascorbic acid, formic acid, hydrochloric acid, hydrofluoric acid, nitric acid, oxalic acid, perchloric acid, phorporic acid, stearic acid, sulfuric acide an dsuperacides. Bases used in TA-55 are calciumhydroxide, magnesium hydroxide, potassium hydroxide, and sodium hydroxide. Perschloric acid solutions were sent to cement fixation. Table 5 on pg 35 contains a list of the use of RCRA-regulated inorganic chemicals in the TA-55 processes Table 6 on pg 37 contains a liste of the use of RCRA-regulated organic chemicals in TA-55 processes..
WS8, WS9	23	Table 1 contains a listing of feed materials for processes contributing to waste streams TA-55-19 and TA-55-20 including presence of RCRA-regualted substanced and P/S codes.
WS11	29	Table 4 contains a listing of secondary radionuclides in TA-55 TRU Waste.

Source Document Data Limitations (if any):

1. It is not evident that the three waste streams described in this document are similar, the same, or different from the two waste streams described in this source document database.
2. This document has numerous handwriten changes and the souce is unknown

Acceptable Knowlege Expert:

Sheri Nance, Sheri Nance Date: 1/18/07
Print /Sign

[a] Obtain from Acceptable Knowledge Documentation Checklist
[b] For microfilm or microfiche, identify box, tape, reel number and location.

CCP Records Transmittal/Receiving Form

CCP Central Records/Records Custodian, 4021 National Parks Highway - MS: GSA 203, Carlsbad, New Mexico 88220

Telephone Number: 505-234-7523, 505-234-7233, 505-234-7617
Fax Number: 505-234-7014

☒ Original Record
☐ Faxed Record

Attn:	Records Custodian	From:	Trey Greenwood
Ship to:	CCP Central Records/ CCP Records Custodian	Site:	Los Alamos National Laboratory
	4021 National Parks Highway - MS GSA 203	Company:	Technical Specialists
	Carlsbad, NM 88220	Telephone Number:	505-302-6000
		Date Sent:	11/23/04
Telephone Number:	505-234-7523		

Document Number	Title/Description	Record Date	Total Pages
D023	Attachment 3 - Acceptable Knowledge Source Document Summary for CCP-AK-LANL-6	~~9/17/2004~~ 9/23/04	2
	TA-55 Plutonium Facility Acceptable Knowledge Report	5/14/2001	600

Comments
None

CCP Records Center
Acceptance/Rejection Signature and Date

Records Accepted ☒ Lynda Estrado (Signature) Lynda Estrado (Printed Name) 2/24/05 (Date)

Records Rejected ☐ _____ (Signature) _____ (Printed Name) _____ (Date)

Reason for Rejection: _____

Re-submittal: _____ (Signature) _____ (Printed Name) _____ (Date)

Attachment 2 - CCP Records Transmittal/Receiving Form

CCP Central Records / Records Custodian, 4021 National Parks Highway - MS: GSA 203, Carlsbad, New Mexico 88220

Telephone Number: 505-234-7523

Fax Number: 505-234-7014

- [x] Original Record
- [ ] Fax Record
- [ ] E-mail Record

Attn:	Sheila Pearcy	From:	Sheri Nance
Ship to:	CCP Central Records/ CCP Records Custodian 4021 National Parks Highway - MS GSA 203, Carlsbad, NM 88220	Site:	Los Alamos National Laboratory, CCP-AK-LANL-006
		Company:	Technical Specialists, LLC
		Telephone Number:	509-628-2048(628-3234 fax)
Telephone Number:	505-234-7523	Date Sent:	1/11/08

Document Number	Title/Description	Record Date	Total Pages
D023	Attachment 3 - Acceptable Knowledge Source Document Summary for CCP-AK-LANL-6: TWCP-AK-2.1-008, R.2 - TA-55 Plutonium Facility Acceptable Knowledge Report	1/11/2008	2
	SN 1/11/08		

Comments

Supercedes previous summary. Re-evaluated for addition of new waste stream

Acceptance/Rejection Signature and Date

Records Accepted [x]	Jodi Saltzman (Signature)	JODI SALTZMAN (Printed Name)	01/23/08 (Date)
Records Rejected [ ]	Signature	Printed Name	Date

Reason for Rejection:

Re-submittal:

Signature	Printed Name	Date

P.01

TRANSACTION REPORT

JAN-23-2008 WED 08:56 AM

FOR: CCP RECORDS 15052347014

SEND

DATE	START	RECEIVER	TX TIME	PAGES	TYPE	NOTE	M#	DP
JAN-23	08:55 AM	915096283234	18"	1	FAX TX	OK	550	

TOTAL : 18S PAGES: 1

Controlled Copy

Attachment 2 - CCP Records Transmittal/Receiving Form

CCP Central Records / Records Custodian, 4021 National Parks Highway - MS: GSA 203, Carlsbad, New Mexico 88220

Telephone Number: 505-234-7523

Fax Number: 505-234-7014

- [x] Original Record
- [ ] Fax Record
- [ ] E-mail Record

Attn:	Sheila Pearcy	From:	Sheri Nance
Ship to:	CCP Central Records/ CCP Records Custodian	Site:	Los Alamos National Laboratory, CCP-AK-LANL-006
	4021 National Parks Highway - MS GSA 203, Carlsbad, NM 88220	Company:	Technical Specialists, LLC
		Telephone Number:	509-628-2048(628-3234 fax)
Telephone Number:	505-234-7523	Date Sent:	1/11/08

Document Number	Title/Description	Record Date	Total Pages
D023	Attachment 3 - Acceptable Knowledge Source Document Summary for CCP-AK-LANL-6: TWCP-AK-2.1-008, R.2 - TA-55 Plutonium Facility Acceptable Knowledge Report	1/11/2008	2
	NA SN 1/11/08		

DIVIDER PAGE ONLY

Not part of page count

Attachment 2 - CCP Records Transmittal/Receiving Form

CCP Central Records / Records Custodian, 4021 National Parks Highway - MS: GSA 203, Carlsbad, New Mexico 88220

Telephone Number: 505-234-7523

Fax Number: 505-234-7014

- [x] Original Record
- [ ] Fax Record
- [ ] E-mail Record

Attn:	Sheila Pearcy	From:	Amy Johns
Ship to:	CCP Central Records/ CCP Records Custodian	Site:	Los Alamos National Laboratory, CCP-AK-LANL-006
	4021 National Parks Highway - MS GSA 203, Carlsbad, NM 88220	Company:	Technical Specialists, LLC
		Telephone Number:	505-302-8669
Telephone Number:	505-234-7523	Date Sent:	1/26/2007

D023	Attachment 3 - Acceptable Knowledge Source Document Summary for CCP-AK-LANL-6	1/14/2009	2
	NA		

Please supercede existing Attachment 3.

Acceptance/Rejection Signature and Date

Records Accepted [x]	Sonia Gonzalez (Signature)	SONIA GONZALEZ (Printed Name)	02.17.09 (Date)
Records Rejected [ ]	(Signature)	(Printed Name)	(Date)

Reason for Rejection:

N/A

Re-submittal: (Signature) (Printed Name) (Date)

HP LaserJet *M2727nf MFP*

Fax Confirmation Report

HP LASERJET FAX

Feb-18-2009 8:43AM

Job	Date	Time	Type	Identification	Duration	Pages	Result
5127	2/18/2009	8:42:31AM	Send	96283238	0:32	1	OK

Controlled Copy

CCP-QP-008, Rev. 14 **Effective Date: 09/19/2007**
CCP Records Management **Page 29 of 29**

Attachment 2 - CCP Records Transmittal/Receiving Form

CCP Central Records / Records Custodian, 4021 National Parks Highway - MS: GSA 203, Carlsbad, New Mexico 88220
Telephone Number: 505-234-7523
Fax Number: 505-234-7014

☒ Original Record
☐ Fax Record
☐ E-mail Record

Attn:	Sheila Pearcy	From:	Amy Johns
Ship to:	CCP Central Records/ CCP Records Custodian	Site:	Los Alamos National Laboratory, CCP-AK-LANL-006
	4021 National Parks Highway - MS GSA 203, Carlsbad, NM 88220	Company:	Technical Specialists, LLC
		Telephone Number:	505-302-6669
Telephone Number:	505-234-7523	Date Sent:	11/26/2007

D023	Attachment 3 - Acceptable Knowledge Source Document Summary for CCP-AK-LANL-6	1/14/2009	2
	NA		

Please supercede existing Attachment 3.

Acceptance/Rejection Signature and Date

Records Accepted ☑ Sonia Gonzalez (Signature) SONIA GONZALEZ (Printed Name) 02.17.09 (Date)

Records Rejected ☐ Signature Printed Name Date

Reason for Rejection: N/A

Re-submittal: Signature Printed Name Date

TWCP-17152

RECORDS SUBMITTAL

INSTRUCTIONS: This form is prepared by the record source when submitting individual records, batch data reports, or a records package to the RMDC Center. Each record submitted requires a complete form.

MANDATORY: ☒ To the ~~best of~~ my knowledge, ~~the record~~(s) have no radioactive contamination.

Signature: [signature]

RECORD TYPE:

☒ ~~Project~~ 2010 ☐ Facility

☐ Other: _____ ☐ UCNI ☐ Proprietary

RECORD SOURCE:

Submittal Date: 9/16/03 Z No.: 109597 Name: [signature]

Originator: _____ Organization: _____

TYPE OF RECORD/ACTION TO BE TAKEN

☒ Individual Record ☐ Batch Data Report ☐ Records Package

☒ New ☐ Addition* ☐ Supersedes*

*Record Barcode Number: _____

RECORD ID NUMBER: (e.g., memo symbol number, procedure (include revision), deficiency number, batch data report number, unique record identifier if applicable):

TWCP-AK-2.1-015, R.3

Record Date: 4/10/03 Physical Page Count: 165 9-16-03 DM ☒ Single Sided ☐ Double Sided

Category Number: (from page two): 07

RECORD TITLE, SUBJECT, AND/OR KEYWORDS:

Deactivate TWCP-AK-2.1-015, R.3 - Acceptable Knowledge Report for Debris Waste Streams Containing Pu-239 - LA-UR-03-2640

MEDIA TYPE:

☐ CD ☐ Diskette ☐ VHS ☐ Zip ☐ Other (specify): _____

RECORD CENTER USE ONLY

☒ Accepted Date: 9-16-03

Signature: [signature]

RIDs Type: CT

(Subject to change prior to scheduled review cycle).

X-Sender: chsmith@norris-mail.lanl.gov
X-Mailer: QUALCOMM Windows Eudora Version 5.1
Date: Mon, 15 Sep 2003 16:57:44 -0600
To: pgp@lanl.gov
From: Cathy Smith <chsmith@lanl.gov>
Subject: Retire TWCP-AK-21-015,Rev 3
Cc: humphreb@lanl.gov
X-Scanned-By: MIMEDefang 2.35

Hi Patsy,

Would you please retire TWCP-AK-2.1-015,R.3, Acceptable Knowledge Report for Debris Waste Streams Containing Pu-239, from the controlled documents?

The retired document should be submitted to the RMDC as was done with the other AK reports. Please let us know the record ID when you get it!

Cheers, Cathy

P.S. There is no problem sending this document to Dick Blauvelt as long as it has an LA-UR number.

"The simplest questions are the hardest to answer."
Northrop Frye

Catherine H. Smith
Project 2010
RRES-CE Certification Group
Risk Reduction & Environmental Stewardship Division
Phone: 667-0113 Page: 664-7104

To: rubyannf@lanl.gov, mlgarcia@lanl.gov, "Yvonne C. Gibson" <ygibson@lanl.gov>,"Catherine H. Smith" <chsmith@lanl.gov>
From: Patricia G Patton <pgp@lanl.gov>
Subject: Procedure Deactivation Notification
Cc: bailey, lpc, jhuchton
Bcc:
Attached:

The following AK report has been deactivated from the system per Cathy Smith's email dated 9/15/03

TWCP-AK-2.1-015,R.3 - Acceptable knowledge Report for Debris Waste Streams Containing Pu-239

~~~~**~~**~~**~~**~~**~~**~~**~~**~~**~~**

Patricia G. Patton
Los Alamos National Laboratory
Risk Reduction & Environmental Stewardship (RRES) Division
Certification Group (CE)
PROJECT 2010
Records Management / Document Control
(RMDC)
557 Openheimer TA-00 / Bldg 764 MS M319
Phone: (505) 667-2071 Email: pgp@lanl.gov
~~~~**~~**~~**~~**~~**~~**~~**~~**~~**~~**

LA-UR-03-2640

PROJECT 2010
ACCEPTABLE KNOWLEDGE REPORT

Procedure Title	Acceptable Knowledge Report for Debris Waste Streams Containing Pu-239

Procedure Number	TWCP-AK-2.1-015,R.3

Waste Generated from Debris Waste Streams	TA-55-19, LA-NCD01, TA-55-30, LANHD01

Effective Date	04/10/03

Next Review Date	04/10/06

DOCUMENT PREPARER:

Betty J. Humphrey	Betty J. Humphrey	04/09/03
AK Investigator [print]	**Signature**	**Date**

APPROVAL:

Sandy Wander	Sandy Wander	4/9/03
Independent Technical Reviewer/Editor [print]	**Signature**	**Date**
Catherine H. Smith	C H Smith	04/09/03
Site Project Manager [print]	**Signature**	**Date**
PETER L. LINDAHL	Peter L. Lindahl	4/9/2003
Site Project QA Officer [print]	**Signature**	**Date**
Wayne A. Punjak	Wayne A. Punjak	4/10/03
Facility Representative [print]	**Signature**	**Date**

HISTORY OREVISIONS

Revision No.	Effective Date	Pages Revised	Reason for Change
0	03/21/02	—	New report. Supersedes TWCP-AK-2.1-008 and TWCP-AK-2.1-010
1	08/27/02	All	Incorporate changes based on process versus operations.
1/IC1	09/05/02	Pages 51 and 52	Add 6 paragraph discussion regarding NDA detection of Sr-90 to section 4.5.2.
		Table 3	Add all Major and Minor Material Parameters, Update column headers to include "Major and Minor Material Parameters".
		Attachment 10	Modify the third column to read "Operations AK Report in which this P/S Code is Described", Delete all section references.
2	10/09/02	All	New revision to incorporate waste stream consolidation. Elimination of the use of the waste code P120 for vanadium pentoxide.
3	04/10/03	All	New revision combining legacy and newly generated debris waste AK

CONTENTS

Section **Page**

ACRONYMS vi
1.0 INTRODUCTION 1
2.0 METHODOLOGY USED TO SEARCH FOR AK RECORDS 1
3.0 DESCRIPTION OF THE WASTE STREAMS 3
3.1 Facility and Mission 3
3.2 Basis, Rationale, and Assumptions Used to Delineate the Waste Streams 4
3.2.1 Waste Packaging 4
3.2.2 Waste Generation Records 11
3.2.3 Waste Stream Delineation 13
3.2.4 Waste Physical Form and Content Description: Assignment of Waste Stream Numbers 15
3.2.5 Waste Container Labeling 16
3.3 Waste Generation Operations 17
3.3.1 Overview 17
3.3.2 Flow Diagrams 19
3.3.3 Chloride Operations 19
3.3.4 Nitrate Operations 20
3.3.5 Miscellaneous Operations 22
3.3.6 Special Processing Operations 26
3.3.7 Metal Operations 27
3.3.8 Pyrochemical Operations 27
3.4 Material Inputs to the Waste Generation Operations 31
3.5 Chemical Inputs to the Waste Generation Operations 31
3.5.1 Acids and bases. 32
3.5.2 Gases and cryogenic fluids. 35
3.5.3 Metals. 37
3.5.4 Inorganic chemicals. 39
4.0 RADIONUCLIDE CONTENT OF THE WASTE STREAMS 47
4.1 Pu-238, Pu-239, Pu-240, Pu-241, and Pu-242 47
4.2 U-233, U-234, U-235, and U-238 47
4.3 Am-241 49
4.4 Other Radionuclides Present Due to Decay 50
4.5 Cs-137 and Sr-90 50
4.5.1 Cs-137 50
4.5.2 Sr-90 50
4.6 Other Radionuclides Introduced as Feed Material 52
5.0 CORRELATIONS BETWEEN WASTE STREAMS 54
6.0 ASSIGNMENT OF WASTE MATRIX CODES 54
7.0 ASSIGNMENT OF WASTE MATERIAL PARAMETER CODES 54

8.0 ASSIGNMENT OF EPA HAZARDOUS WASTE NUMBERS 55
8.1 F, K, and P Listings 56
8.2 Toxicity Listings 56
9.0 VERIFICATION THAT IGNITABLE, REACTIVE, AND CORROSIVE WASTES WERE EXCLUDED 58
10.0 VERIFICATION THAT INCOMPATIBLE CHEMICALS WERE PROHIBITED 67
11.0 VERIFICATION THAT THERE ARE NO COMPRESSED GASES, FREE LIQUIDS, NONRADIONUCLIDE PYROPHORICS, SEALED CONTAINERS GREATER THAN FOUR LITERS IN VOLUME, OR >1% RADIONUCLIDE PYROPHORICS 67
12.0 VERIFICATION THAT THERE ARE NO POLYCHLORINATED BIPHENYLS (PCBs) IN the WASTE STREAM 68
13.0 REMEDIATION OF PROHIBITED ITEMS 69
14.0 DESCRIPTION OF THE NUMBER OF CONFINEMENT LAYERS USED FOR WASTE PACKAGING 69
15.0 CITED PROCEDURES AND REQUIREMENTS DOCUMENTS 70

TABLES

Table		Page
1	TRU Waste Streams in which Pu-239 is the Dominant Pu Isotope	3
2	Waste Content Codes in the Los Alamos Certification Plan	6
3	Waste Physical Form, Waste Material Parameters, Estimated Volumes, and Content Description for Debris Waste Streams	9
4	History of Debris Waste Management	11
5	Primary Information Sources	16
6	Feed Materials for Operations Contributing to LANL Waste Streams	32
7	Acids, Bases, and Gases in Operations Contributing to TA-55 Waste Streams	36
8	Use of RCRA-Regulated Metals and Inorganic Chemicals in TA-55 Operations	40
9	Use of RCRA-Regulated Organic Chemicals in TA-55 Operations	43
10	Average Isotopic Content of Plutonium Material Types and Enrichments	48
11	Average Isotopic Content of Uranium Material Types and Enrichments (Wt. %)	49
12	Secondary Radionuclides in Plutonium Recovery TRU Waste	53
13	Assignment of Waste Codes to Waste Streams Containing Pu-239	55
14	F-Listings Applicable to Specific P/S Codes	57
15	D-Listings Applicable to Specific P/S Codes	59

ATTACHMENTS

1 Acceptable Knowledge Roadmap (6 pages)
2 LANL and TA-55 Site Maps (2 pages)
3 Simplified Flow Diagram for Generation of TRU Waste: Debris Waste (1 page)
4 Simplified Flow Diagrams (13 pages)
5 Example Waste Generator Forms (10 pages)
6 Example Waste Management System Forms (7 pages)
7 Chemical Waste Disposal Request Form (1 page)
8 Decision/Discrepancy Resolution Documentation (3 pages)
9 TA-55 Process/Status Code Index (8 pages)

ACRONYMS

AEC	Atomic Energy Commission
AK	acceptable knowledge
AKIS	*Acceptable Knowledge Information Summary for Los Alamos National Laboratory for Transuranic Waste Stream* (TWCP-AK-2.1-019)
AKIR	*Acceptable Knowledge for Isotope Ratios* (TWCP-AK-2.1-020)
ARIES	Advanced Recovery and Integrated Extraction System
BDR	batch data report
CBFO	Carlsbad Field Office (DOE)
CFR	*Code of Federal Regulations*
CMPO	octylphenyl di-isobutyl carbamoylmethyl phosphine oxide
C–N–O	carbon–nitrogen–oxygen
CSMO	Central Scrap Management Office
CST	Chemical Science and Technology Division
CTEN	combined thermal epithermal neutron
DBBP	dibutyl butylphosphonate
DCHP	dicesium hexachloroplutonate
DHDCMP	dihexyl N, N-diethylcarbamoylmethyl phosphonate
DL	discard limit
DOE	U.S. Department of Energy
DOR	direct oxide reduction
DOT	U.S Department of Transportation
DP	defense program
DTP	detailed technical procedure
DVRS	Decontamination and Volume Reduction System
DWLS	Discardable Waste Log Sheet
EPA	U.S. Environmental Protection Agency
ER	Electrorefining
F	RCRA hazardous waste number prefix for hazardous wastes from non-specific sources, defined in 40 CFR Subpart D, Section 261.31
FOOF	dioxygen difluoride
FRAM	Fixed Energy Response Function Analysis with Multiple Efficiencies [software program]
HENC	high efficiency neutron counter
HEPA	high-efficiency particulate air
HGAS	headspace gas
HSE	Health, Safety, and Environment Division of the EPA
HWN	hazardous waste number
ICP	inductively coupled plasma
ID	item identification
IDC	item description code
ITF	Impact Test Facility
K	RCRA hazardous waste number prefix for hazardous wastes from specific sources, defined in 40 CFR Subpart D, Section 261.32
LANL	Los Alamos National Laboratory

LLW	low-level waste
M	molar
MASS	Material Accountability and Safeguards System
MCDOR	multicycle direct oxide reduction
MEGAS	Multiple Energy Gamma Assay System
MSE	molten-salt extraction
MST	Materials Science and Technology Division
MT	material type
NDA	nondestructive assay
NMT	Nuclear Material Technology
P	RCRA hazardous waste number prefix for acute hazardous waste defined in 40 CFR Subpart D, Section 261.33
PCB	polychlorinated biphenyl
PF	Plutonium Facility
ppm	parts per million
Project 2010	formerly the Transuranic Waste Characterization/Certification Project
PRQL	program required quantitation limit
P/S	process/status [code]
PU	plutonium
PuBe	plutonium–beryllium
QA	quality assurance
QAPP	*Quality Assurance Program Plan*
QP	quality procedure
R&D	research and development
RCRA	Resource Conservation and Recovery Act
RD&D	research, development, and demonstration
RFETS	Rocky Flats Environmental Technology Site
RLWTF	Radioactive Liquid Waste Treatment Facility
RMDC	Records Management/Document Control
RRES-CE	Risk Reduction and Environmental Stewardship-Certification [Group]
RSWD	radioactive solid waste disposal
RTR	real-time radiography
SME	subject matter expert
SOP	safe operating procedure
SPM	Site Project Manager
SWB	standard waste box
TA	technical area
TBD	to be determined
TBP	tributyl phosphate
TIC	tentatively identified compound
TOPO	trioctylphosphine oxide
TRU	transuranic
TRUCON	TRUPACT-II Content Code
TRUPACT-II	Transuranic Waste Transporter-Model II
TWBIR	Transuranic Waste Baseline Inventory Report

UCL_{90}	90% upper confidence limit
UCNI	unclassified controlled nuclear information
VE	visual examination
VOC	volatile organic compound
WAC	Waste Acceptance Criteria
WI	work instructions
WIPP	Waste Isolation Pilot Plant
WIPP WAC	Waste Isolation Pilot Plant Waste Acceptance Criteria
WIPP WAP	Attachment B, Waste Analysis Plan, to the *Hazardous Waste Facility Permit for the Waste Isolation Pilot Plant* (EPA ID No. NM4890139088-TSDF)
WPF	Waste Profile Form
WMC	waste matrix code
WMP	waste material parameter
WMS	Waste Management System
WODF	Waste Origination and Disposition Form
WPRF	Waste Profile Request Form
WTWBIR	WIPP Transuranic Waste Baseline Inventory Report
XES	X-ray energy spectroscopy

ACCEPTABLE KNOWLEDGE REPORT FOR DEBRIS WASTE STREAMS CONTAINING Pu-239

1.0 INTRODUCTION

All transuranic (TRU) waste must be sufficiently characterized and certified before it is shipped to the Waste Isolation Pilot Plant (WIPP). The U.S. Environmental Protection Agency (EPA) allows use of acceptable knowledge (AK) for waste characterization, and defines AK in its guidance document, *Waste Analysis at Facilities that Generate, Treat, Store and Dispose of Hazardous Waste*. Attachment B, Waste Analysis Plan (WIPP WAP), to the *Hazardous Waste Facility Permit for the Waste Isolation Pilot Plant* (EPA ID No. NM4890139088-TSDF) defines AK information and provides guidelines on how AK should be obtained and documented.

This AK Report was prepared in accordance with *Acceptable Knowledge Documentation* (TWCP-QP-1.1-021). The primary purpose of this report is to systematically organize, evaluate, and summarize AK information about characteristics of the wastes generated by the plutonium recovery and research and development (R&D) process at the Los Alamos National Laboratory (LANL). Currently, most of the waste is from the Plutonium Facility at Technical Area (TA)-55, one of the TRU waste generators. By doing so, this report provides technical support for delineation of waste streams and assignment of specific waste containers to these waste streams.

2.0 METHODOLOGY USED TO SEARCH FOR AK RECORDS

The AK search for the information related to these debris waste streams covered:

- Review of the *Acceptable Knowledge Information Summary for Los Alamos National Laboratory Transuranic Waste Streams* (TWCP-AK-2.1-019) (AKIS) that includes information regarding all LANL wastes, including TA-55 wastes, and also includes AK isotope ratio information found in *Acceptable Knowledge for Isotope Ratios* (TWCP-AK-2.1-020) (AKIR) (a subset of the AKIS).
- Review of reports, documents, and databases related to the waste generation and waste management activities as documented in the Acceptable Knowledge Roadmap (Attachment 1)
- Interviews with personnel involved with waste generation and waste management as documented in AK reports listed in the Acceptable Knowledge Roadmap (Attachment 1)
- Review of AK reports for facility operations
- Analysis of the operations generating waste, as discussed in the operations AK reports and in this report

- Existing pre-WIPP WAP data for headspace gas (HGAS) and radiography (RTR) for legacy waste, as listed in the Acceptable Knowledge Roadmap (Attachment 1).

This AK Report is based on detailed information compiled in a set of closely related reports about TRU waste generating activities at LANL. For convenience in organizing AK for the plutonium (Pu)-239 recovery process, the process was categorized into six operational areas. The multiple operations in each area are described in detail in the following six AK reports:

- *Acceptable Knowledge Report for Chloride Operations at LANL* (TWCP-AK-2.1-002)
- *Acceptable Knowledge Report for Metal Operations at LANL* (TWCP-AK-2.1-003)
- *Acceptable Knowledge Report for Miscellaneous Operations at LANL* (TWCP-AK-2.1-004)
- *Acceptable Knowledge Report for Nitrate Operations at LANL* (TWCP-AK-2.1-005)
- *Acceptable Knowledge Report for Pyrochemical Operations at LANL* (TWCP-AK-2.1-006)
- *Acceptable Knowledge Report for Special Processing Operations at LANL* (TWCP-AK-2.1-007)

The AK reports currently contain information on more than 175 individual operations; each assigned a unique identifier called a process/status (P/S) code. These codes are used for the purposes of nuclear material accounting. For example, the nitrate operations report (*Acceptable Knowledge Report for Nitrate Operations at LANL* [TWCP-AK-2.1-005]) covers waste generation operations and characteristics for over 80 different operations, each with its own P/S code. The search and compilation of AK information is based on P/S code, because that is the greatest level of detail recorded in waste generator records. However, as described in Section 3.2, TRU waste items are packaged into drums based on the isotopic material content of the waste and nondestructive assay characteristics without regard to process of origin (i.e., P/S code). The AK information search to determine Resource Conservation and Recovery Act (RCRA) and chemical constituents in the waste is performed based on the operations used at LANL and tracked by the P/S codes, and it is described in the operations AK reports listed above.

This AK report summarizes AK information specific to legacy and newly generated debris waste streams in which Pu-239 is the dominant Pu isotope. These waste streams are listed in Table 1.

Project 2010 (formerly the Transuranic Waste Characterization/Certification Project) Records Management/Document Control (RMDC) Center retains copies of the documents that are referenced in this AK report.

Table 1. TRU Waste Streams in which Pu-239 is the Dominant Pu Isotope

Waste Stream	Designation	Mixed or Non-Mixed Status	Waste Stream Name
TA-55-19	Debris	Mixed	Mixed combustible debris waste
LA-NCD01	Debris	Non-Mixed	Non-mixed combustible debris waste
TA-55-30	Debris	Mixed	Mixed heterogeneous debris waste
LA-NHD01	Debris	Non-Mixed	Non-mixed heterogeneous debris waste

Unclassified Controlled Nuclear Information (UCNI) is reported in records, rather than included in this report. Such records are identified as UCNI in the Acceptable Knowledge Roadmap (Attachment 1). When discrepancies in AK information are discovered, they are documented and resolved in accordance with *Acceptable Knowledge Documentation* (TWCP-QP-1.1-021). The resulting documentation is found in Decision/Discrepancy Resolution Documentation (Attachment 8).

3.0 DESCRIPTION OF THE WASTE STREAMS

3.1 Facility and Mission

Since 1978 the Plutonium Facility (Building PF-4) has been located at TA-55 and used for the extraction and recovery of plutonium from residues and scraps generated from operations at various LANL facilities and other U.S. Department of Energy (DOE) sites in the defense complex. The scrap and residues are processed to recover as much plutonium as practicable before disposal. The recovered plutonium is converted into pure plutonium feedstock. This recovery process, associated maintenance operations, limited manufacture of finished parts from purified plutonium, and plutonium research are the sources of TRU-contaminated scrap, residues, and debris generated at LANL. The waste from the plutonium recovery process meets the definition contained in the WIPP WAP, Sec. B-1a, "Plutonium recovery wastes are residues from the recovery of plutonium-contaminated molds, metals, glass, plastics, rags, salts used in electrorefining, precipitates, firebrick, soot, and filters." The plutonium recovery process handles primarily Pu-239 and Pu-242 based samples. These are categorized based upon exact isotopic make-up into various material types. The associated research activities involve other plutonium isotopes, different uranium isotopes, and minor amounts of several other radioisotopes.

Before 1978, wastes were generated from plutonium recovery and purification for defense and non-defense programs although production of heat sources using Pu-238 was and still is the only major non-defense activity. These Pu-238 wastes were generated and produced in the same rooms and gloveboxes and were not

segregated until August 27, 1998 (TWCP-887). Waste is also produced from "special process" and research-related activities. These wastes were not segregated until 1998 and were also commingled in the final waste containers to such an extent that segregation was not possible on the basis of waste generating operation or glovebox location (TWCP-887). The waste was also co-mingled with room trash related to these same operations (both defense and non-defense). The room trash waste was initially boxed as low-level waste but was returned for discard in drums as TRU waste when on-site assay results showed that it exceeded the low-level waste threshold value (TWCP-816).

A LANL site map and a detailed map of the current Plutonium Facility buildings at TA-55, including Building PF-4, are shown in Attachment 2.

3.2 Basis, Rationale, and Assumptions Used to Delineate the Waste Streams

The basis for delineation of waste streams is established by the evolving set of LANL waste management plans and facility specific procedures, which date back to the start of operations at the Plutonium Facility at TA-55 in 1978 (TWCP-352, TWCP-697, TWCP-700, TWCP-701, TWCP-3943). Since then, the stated policy and practice is to handle and package all combustible debris, heterogeneous debris, and homogeneous waste in a similar fashion, regardless of the process of origin. Relevant details of these planning and implementation decisions for debris wastes are summarized in this section. The purpose is to provide background information related to the rationale used by Project 2010 to assign waste containers to specific waste streams.

3.2.1 Waste Packaging

1978-1995

At TA-55, the inspection, collection, documentation and packaging of solid, certifiable TRU wastes is conducted by a waste management section or team (TWCP-351, TWCP-352, TWCP-700, TWCP-701, TWCP-3943). Wastes from all TRU waste-generating activities at TA-55 are handled and packaged by this team initially following Atomic Energy Commission (AEC) requirements (*U.S. Atomic Energy Commission AEC Manual: Chapter 0511, Radioactive Waste Management* [AEC 1973] [AEC 0511-01]) and later DOE Order 5820.1 and 5820.2, *Management of Transuranic Contaminated Material*, DOE, 09/30/82 and 02/06/84. Currently LANL follows DOE Order 435.1, *Radioactive Waste Management, Department of Energy, Environmental Management, 2001*. Materials are considered waste only when they have been received and processed by the waste management team. Waste segregation schemes used by this team have evolved since operations began at the Plutonium Facility in 1978.

In 1978, the standard operating procedure for waste management stated the guiding philosophy of minimizing the amount of waste generated and minimizing the plutonium content of that waste (TWCP-3943).

Discard limits (DLs) for plutonium in various types of waste matrices were established by the waste-generating group, and approved by the LANL division office and the DOE Albuquerque Operations Office. Personnel were requested to sort potentially recyclable TRU waste items (i.e., those containing potentially recoverable amounts of Pu) into classes such as rubber, plastics, rags, non-Pu metals, glass, oils, cans, sweepings, etc. These materials were then assayed. Based upon its plutonium level relative to the DL, material was either sent to recovery operations or to "20-year" retrievable storage. The AEC Manual Chapter 0511 (1973) mandated segregation of waste items into combustible and noncombustible categories. All liquids, including oils, were required to be sent to recovery operations for processing. Liquids were explicitly prohibited from any container of solid waste materials (TWCP-3943).

In 1984, a lab-wide TRU Waste Certification Plan was adopted for newly generated TRU waste (TWCP-697). Each LANL waste generator was required to develop an attachment to this plan to define the details of the waste certification functions and controls that applied to their specific operations and wastes (Section 9 in TWCP-697). Waste Content Codes were assigned by the LANL Waste Management Group, Health, Safety and Environment Division (HSE-7 at that time). These codes were later known as the Item Description Codes (IDC), and categorized the waste into one of nine categories, as listed in Table 2. TA-55, then operated by Materials Science and Technology (MST) Division, generated debris waste under content codes 004 (combustible solids) and 005 (noncombustible scrap) only. The use of non-destructive assay to determine the plutonium level relative to the DL provided impetus for segregation into combustible (for gamma assay) and noncombustible (for neutron assay).

In March 1987, MST Division finalized its Certification Plan attachment for contact-handled combustible and noncombustible solid waste (TWCP-701; Attachment 3). Other waste forms were addressed as indicated in Table 2. Combustible and noncombustible solid wastes were defined by the MST document as follows (TWCP-701) and were segregated by mixed and non-mixed:

- Combustible waste forms (Waste Content Code 004) included materials that could be reduced to an ash if desired but that did not require further processing to meet the requirements of the *TRU Waste Acceptance Criteria for the Waste Isolation Pilot Plant* (WIPP-DOE-069) (WIPP WAC) (TWCP-701). (This definition is still current.) Subcategories included plastic-based combustibles, cellulose-based combustibles, and miscellaneous (graphite and graphite crucibles). It was acceptable for the combustible waste stream to include some unspecified "small" fraction of noncombustible solids such as scrap metals.

Table 2. Waste Content Codes in the Los Alamos Certification Plan

Item Description Code or Waste Content Code	Description	Facilities Generating Waste
001	Mixed metal scrap and combustibles (primarily metals or metal equipment along with its combustible components and combustibles generated during decommissioning, sectioning equipment, or packaging)	Los Alamos TRU Waste Size Reduction Facility
002	Cemented sludges (caustic sludge stabilized with Portland cement)	Liquid Waste Treatment Plant
003	Dewatered sludges (caustic sludge from liquid waste treatment facility using dry Portland cement to stabilize any liquids that may separate)	Liquid Waste Treatment Plant
004	Combustible solids (may contain small fraction of noncombustible solids)	MST Division Certification Plan Attachment MST Division Attachment for Pu238 Wastes
005	Noncombustible scrap (may contain small fraction of combustible solids)	MST Division Certification Plan Attachment MST Division Attachment for Pu238 Wastes
006	Cemented process residues (process-leached solids, filter cakes, evaporator bottoms, etc., stabilized in Portland cement)	MST Division Process Residue Certification
007	Contact and remote-handled solids from hot-cell operations	MST-14 Contact and Remote-Handled Waste Certification
008	Cemented incinerator ash (ash stabilized with Portland cement)	Treatment Development Facility
009	Cemented aqueous liquid wastes (neutralized or caustic aqueous liquids stabilized with Portland cement)	Not addressed

NOTE: Graphite items were historically segregated as combustible waste; current waste management practices identify graphite items as inorganic debris.

- Noncombustible waste forms (Waste Content Code 005) included materials that could not be reduced to ash but that did meet the WIPP WAC without further processing (TWCP-701). The two subcategories were metals and non-metals. The non-metal wastes included glass, fiberglass heating mantles, porcelain crucibles, ceramic furnace tube inserts, and leaded glovebox gloves. It was acceptable for the noncombustible waste stream to include some unspecified "small" fraction of combustible solids, which could be contained in plastics. For WIPP purposes, any waste forms that were chemically compatible and that met the waste acceptance criteria (WAC), could be combined into a single waste container.

It was expected that debris waste from waste management operations would usually be packaged into 55-gal U.S. Department of Transportation (DOT) 17C steel drums, including either two 5-mil plastic bags closed with yellow vinyl tape, or one 90-mil rigid polyethylene liner with lid (Sections 3.2.1 and 3.5.3.2 in TWCP-701). Waste could also be packaged in vented 30-gal drums, or into in-line 30-gal drums attached to a glovebox in the waste management room, and later overpacked into 55-gal DOT 17C drums (Sections 3.2.1 and 3.5.3.1 in TWCP-701).

All drums were to be fitted with a vent clip or carbon filter so as to prevent the accumulation of flammable gases in the waste packages (Section 3.8.15 in TWCP-701). Requirements were also specified for other types of waste containers.

1995-2000

In 1995, a new TRU Waste Certification Plan was adopted, and TRU waste certification activities were shifted to Chemical Science and Technology (CST-7) (presently known as Risk Reduction and Environmental Stewardship-Transuranic Waste Certification Group [RRES-CE]).

Additional AK information regarding the physical form of debris waste (e.g., glass, metal, or plastic) is available from waste item-level descriptions that are assigned for the purposes of special nuclear material (SNM) tracking and accountability. The AK item descriptions provide more detailed information about the waste matrices expected to be present in the combustible and noncombustible waste streams. No further delineation of the combustible and noncombustible waste

streams based on physical form and matrix is made, however, because waste management practices at LANL have been based on SNM processes rather than waste segregation by specific matrices. Debris waste items are packaged based on isotopic material content (Pu-239 or Pu-238), nondestructive assay characteristics, and hazardous constituents.

Changes were also introduced into the packaging procedure used (Section 3.2.1 in TWCP-700). Up to two 5-mil liner bags could still be present, but were to be closed by folding, not by taping. All drums were to be fitted with carbon filters, and standard waste boxes (SWBs) were to be fitted with two carbon filters. Waste placed inside the drums was to be contained in a single plastic bag that was twisted, closed with a plastic tie, and then taped (TWCP-12088). Since 1997, plastic bags with filters are used. Waste with the potential to tear the plastic bag, such as broken glass, was to be placed first in a metal container with a slip lid, taped closed, and then placed into the plastic bag. A summary of the physical form, and description for debris waste is given in Table 3.

2000-2001

In April 2000, the first revision of the waste packaging procedure currently used at TA-55 was issued as a safe operating procedure (SOP), *Inspecting, Packaging, Rejecting, and Remediating Transuranic Waste for WIPP and for TA-54 Safe Storage* (NMT7-SOP-TA55-013), with four detailed Work Instructions (WI):

- *Inspecting, Labeling, and Preparing TRU Waste Containers* (NMT7-WI1-SOP-TA55-013)
- *Performing Visual Examinations of TRU Waste* (NMT7-WI2-SOP-TA55-013)
- *Packing TRU Waste Containers* (NMT7-WI3-SOP-TA55-013)
- *Sealing TRU Waste Containers* (NMT7-WI4-SOP-TA55-013)

2001-Present

Revisions to this SOP and associated work instructions were approved by the Carlsbad Field Office (CBFO) on July 17, 2001. Debris waste packaged by TA-55 after that date is considered to be "newly generated" waste that is packaged in accordance with WIPP WAP-compliant procedures. Waste packaged prior to that date is considered to be "legacy" (retrievably stored) waste, which is subject to more stringent characterization than newly generated waste. Table 4 illustrates the segregation history for debris waste.

Table 3. Waste Physical Form, Waste Material Parameters, Estimated Volumes, and Content Description for Debris Waste Streams

Waste Stream	Waste Physical Form Maximum Layers of Confinement and Estimated Volume	Waste Description and Major and Minor Waste Material Parameters
TA-55-19	Combustible debris waste (mixed) Legacy: Maximum: 6 layers Volume:1621.42 m^3 Newly Generated: Maximum: 1 layer FY01[a] Volume: 2.9 m^3 FY02[b] Volume: 21.8 m^3 FY03[c] Volume: 29 m^3 FY04[c] Volume: 33 m^3 FY05[c] Volume: 33 m^3	Mixed combustible debris waste generated by plutonium recovery, research and development processes at the LANL site, resulting from facility and equipment operations and maintenance. The debris waste includes paper, rags, plastic, rubber, wood-based HEPA filters, and other plastic-based and cellulose-based items. Plastic-based waste includes (but may not be limited to): tape, polyethylene and vinyl; gloves; plastic vials; polystyrene; Tygon® tubing; polyvinyl chloride plastic; Teflon® products; Plexiglas®; and dry-box gloves (unleaded neoprene base). Cellulose-based waste includes (but may not be limited to): rags, wood, paper, and cardboard; laboratory coats and coveralls; booties and cotton gloves; and similar materials. The waste stream may also contain a smaller fraction of noncombustible solids (e.g., scrap metal, salts, crucibles, metal lids, zippers, discarded tools) and a small fraction of homogenous solids (e.g., leached solids, ash, hydroxide cakes, and impure oxides). The waste stream includes retrievably stored and newly generated waste. Major WMPs: R, C, PW, Minor WMPs: IM, OM, AM, OI, OR, IN, S.
LA-NCD01	Combustible debris waste (non-mixed) Legacy: Maximum: 6 layers Volume: 55.56 m^3 Newly Generated: Maximum: 1 layer FY01[a] Volume: 12.3 m^3 FY02[b] Volume: 5.7 m^3 FY03[c] Volume: 8 m^3 FY04[c] Volume: 9 m^3 FY05[c] Volume: 9 m^3	Non-mixed combustible waste generated by plutonium recovery, research and development processes at the LANL site, resulting from facility and equipment operations and maintenance. The debris waste includes paper, rags, plastic, rubber, wood-based HEPA filters, and other plastic-based and cellulose-based items. Plastic-based waste includes (but may not be limited to): tape, polyethylene and vinyl; gloves; plastic vials; polystyrene; Tygon® tubing; polyvinyl chloride plastic; Teflon® products; Plexiglas®; and dry-box gloves (unleaded neoprene base). Cellulose-based waste includes (but may not be limited to): rags, wood, paper, and cardboard; laboratory coats and coveralls; booties and cotton gloves; and similar materials. The waste stream may also contain a smaller fraction of noncombustible solids (e.g., scrap metal, salts, crucibles, metal lids, zippers, discarded tools) and a small fraction of homogenous solids (e.g., leached solids, ash, hydroxide cakes, and impure oxides). The waste stream includes retrievably stored and newly generated waste. Major WMPs: R, C, PW, Minor WMPs: IM, OM, AM, OI, OR, IN, S.

Table 3. Waste Physical Form, Waste Material Parameters, Estimated Volumes, and Content Description for Debris Waste Streams (continued)

Waste Stream	Waste Physical Form Maximum Layers of Confinement and Estimated Volume	Waste Description and Major and Minor Waste Material Parameters
TA-55-30	Heterogeneous debris waste (mixed) Legacy: Maximum: 6 layers Volume: 2270.09 m^3 Newly Generated: Maximum: 1 layer FY01[a] Volume: 4 m^3 FY02[b] Volume: 19.7 m^3 FY03[c] Volume: 26 m^3 FY04[c] Volume: 30 m^3 FY05[c] Volume: 30 m^3	Mixed heterogeneous debris waste generated by plutonium recovery, research and development processes at the LANL site, resulting from facility and equipment operations and maintenance. The waste includes plutonium-contaminated noncombustible and combustible debris waste. The noncombustible debris waste includes (but may not be limited to): small tools and equipment; cans; motors, pumps and process equipment; gloveboxes and glovebox windows; ventilation ductwork; composite HEPA filters; metal pipes; glass; bottles; graphite; salt, slag and crucibles; and miscellaneous lab ware. The waste stream may also contain a smaller fraction of combustible solids (e.g. paper, rags, plastic, rubber, leaded gloves) and a small fraction of homogeneous solids (e.g. leached solids, ash, hydroxide cakes, impure oxides). The waste stream includes retrievably stored and newly generated waste. Major WMPs: IM, AM, OM, OI. Minor WMPs: C, R, PW, OR, IN, S.
LA-NHD01	Heterogeneous debris waste (non-mixed) Legacy: Maximum: TBD Volume:49.19 m^3 Newly Generated: Maximum: 1 layer FY01[a] Volume: 7.2 m^3 FY02[b] Volume: 8.5 m^3 FY03[c] Volume: 12 m^3 FY04[c] Volume: 13 m^3 FY05[c] Volume: 13 m^3	Non-mixed heterogeneous debris waste generated by plutonium recovery and research and development processes at the LANL site, resulting from facility and equipment operations and maintenance. The waste includes plutonium-contaminated noncombustible and combustible debris waste. The noncombustible debris waste includes (but may not be limited to): small tools and equipment; cans; motors, pumps and process equipment; gloveboxes and glovebox windows; ventilation ductwork; composite HEPA filters; metal pipes; glass; bottles; graphite; salt, slag and crucibles; and miscellaneous lab ware. The waste stream may also contain a smaller fraction of combustible solids (e.g. paper, rags, plastic, rubber, leaded gloves) and a small fraction of homogeneous solids (e.g. leached solids, ash, hydroxide cakes, impure oxides). The waste stream includes retrievably stored and newly generated waste. Major WMPs: IM, AM, OM, OI. Minor WMPs: C, R, PW, OR, IN, S.

[a]Actual, [b]Actual through August, September projected, [c]Projected

NOTE: Waste material parameters are: C = cellulose, R = rubber, PW = plastics – waste materials, IM = iron base metal alloys, AM = aluminum base metal alloys, OM = other metal alloys, OI = other inorganic material, IN = inorganic material, OR = organic material; S = soil; all waste material parameters present in varying quantities in these waste streams.

Table 4. History of Debris Waste Management

Date	WIPP WAC Status	WIPP WAC	AEC Manual Chapter 0511	NDA Requirements
1978-1983	Not implemented	N/A	Segregate combustibles and noncombustibles	Segregate combustibles and noncombustibles
1984-1987	Draft Attachment to LANL Certification Plan	Segregate combustibles and noncombustibles IDC 004 and 005	Segregate combustibles and noncombustibles	Segregate combustibles and noncombustibles
1987-1994	Final Attachment to LANL Certification Plan	Segregate combustibles and noncombustibles IDC 004 and 005	N/A	Segregate combustibles and noncombustibles
1995-2001	QAPP Released, New LANL Certification Plan, WIPP WAP	Segregate by waste streams to meet WAP requirements	N/A	Segregate by more detailed waste matrix to improve NDA results
2002-present	WIPP WAP, LANL Certification Plan	Segregate by waste streams to meet WIPP requirements	N/A	Consolidate similar waste matrices

N/A = not applicable

3.2.2 Waste Generation Records

From the beginning of operations of the current Plutonium Facility at TA-55, the physical description of each waste item generated is documented on a Waste Origination and Disposition Form (WODF) by the waste generator according to controlled procedures (page 24 in TWCP-701; Appendix 1 in TWCP-700; Appendix B in *Inspecting, Packaging, Rejecting, and Remediating Transuranic Waste for WIPP and for TA-54 Safe Storage* [MT7-SOP-TA55-013]. Items are bagged out of gloveboxes and sent to the Waste Management section, where multiple items are placed into drums. Starting in 1987, the Plutonium Facility at TA-55 began its current system of tracking waste items by their nuclear material content, using the computerized Material Accountability and Safeguards System (MASS).

Waste items are labeled with an item identification (ID) code that contains information on the waste material parameter of the item and an embedded P/S code that corresponds to nuclear materials accountability for the operation that produced the waste item.

The P/S code refers to a specific part of an operation within the overall Pu-recovery process, but generally applies to more than one glovebox or to the same operation carried out in multiple locations or gloveboxes in PF-4. Recording the P/S codes was inconsistent until about 1995 (TWCP-351). In the packaging operation for legacy waste, a standard

form, the Discardable Waste Log Sheet (DWLS), was used to list each ID code (page 25 in TWCP-701; Appendix 2 in TWCP-700; Appendix C in NMT7-SOP-TA55-013). This form was signed by the waste packager and approved by quality assurance personnel. Both the WODF and DWLS for each TRU waste drum are maintained as hard copy records by the generator. Many of these waste tracking ID codes for individual items in drums of debris waste are compiled in a list that correlates item codes with containers or in a database maintained as the Waste Management System (WMS) (TWCP-5086). A Process/Status Code Index is given in Attachment 9.

Example copies of legacy container records are included in Attachment 5. Note that this waste container example (LA00000057745) contains waste items associated with seven different P/S codes (BM, EOC, FF, OM, SS, TIGR, and XO). Each of the waste items is linked to a unique WODF. Information encoded in the ID code indicates that five of the seven waste items are metal (MET), while the remaining two from P/S code SS are crucibles (XBL). These and other matrix abbreviations used by waste management personnel are listed in Appendix D of *Performing Visual Examinations of TRU Waste* (NMT7-WI2-SOP-TA55-013)

For newly generated waste, the physical description of each waste item generated is documented on a Waste Origination and Disposition Form (WODF) by the waste generator in accordance with *TA-55 Transuranic Waste Interface Document* (NMT7-AP-TA55-018) and *Performing Visual Examinations of TRU Waste* (NMT7-WI2-HCP-TA55-013). The WODF is generated electronically in the WMS database. The P/S code for waste items is also documented on this form. The Plutonium Facility at TA-55 tracks waste items both by the P/S code from which they originated as well as by their material content, using the computerized Material Accountability and Safeguards System (MASS). Waste items are labeled with a code that contains information on the waste material parameter of the item and an embedded P/S code that corresponds to the operation that produced the waste item. In the packaging process, the WMS is used to list each ID code and record its matrix material electronically (Appendix B in *Performing Visual Examinations of TRU Waste* [NMT7-WI2-HCP-TA55-013]). This form is electronically signed by the waste packager and approved by quality assurance personnel. The WODF(s) for each item in a TRU waste container are maintained electronically and a hard copy is printed after all approvals are in place.

Example copies of these container records are included in Attachment 6. Note that this waste container (LA00000059359) contains waste items generated by four different P/S codes (ITF, CA, RB, and RBJ), each

waste item with its own completed WODF. (The P/S code of each waste item is listed in the Measurement Information field under PS near the center of the WODF screen). Information encoded in the Item ID indicates that one of the waste items is combustible waste (COM), another is rubber (RUB), and the remaining four are plastics (PLS).

The MASS system and associated P/S codes were developed and are used strictly to track accountable nuclear materials throughout the Pu-recovery process. However, the P/S codes provide the finest level of detail available to associate waste items with a specific operation of origin. Consequently the P/S code system is used extensively in the description and documentation of AK information for RCRA and for chemical constituents for the Pu-recovery process in this report and in the operations AK reports. While a P/S code can be associated with most waste items generated after 1987 and all items generated after 1995, the P/S code does not provide a method of segregating waste or delineating waste streams.

3.2.3 Waste Stream Delineation

The LANL procedure for delineating TRU waste streams is described in *Acceptable Knowledge Documentation* (TWCP-QP-1.1-021).

Waste segregation practices separate wastes into combustible (IDC 004) and noncombustible (IDC 005) waste forms based on plans for treatment of the combustible waste by incineration or other thermal decomposition strategies. Generator records list only the single, major component of each waste item, so that segregation by waste matrix appears in the records to be more exact than it was in practice. In particular, since any waste forms that are chemically compatible could be combined in the noncombustible waste form, the noncombustible waste form often contains a larger fraction of combustible waste than would be expected from the IDC description.

TA-55 maintains two separate Pu-recovery process lines, one for Pu-238 based isotopic materials (not covered in this AK report) and one for Pu-239 and other Pu-isotope recovery that is the subject of this report. Generator records distinguish waste from each process using a "material type" notation that is explained in more detail in Section 4.1. Material types based on Pu isotopes other than Pu-239 (for example Pu-242) are processed in the same gloveboxes with the same equipment as the Pu-239 materials. The waste items from the occasional processing of these other material types are expected to be contaminated with carryover Pu-239, so that segregation of waste streams for these minor Pu-isotope types is not feasible. In some special cases, Pu-238 materials are processed in equipment used in Pu-239 operations, so some cross-

contamination of wastes with Pu-238 and Pu-239 is expected. One example of this is the thermal decomposition operation, where Pu-contaminated rags were ashed. Both Pu-238 and Pu-239 based materials were sent through this operation, resulting in waste of mixed material type. However, the majority of Pu-238 and Pu-239 operations are segregated, allowing separate delineation of Pu-238 waste streams.

The hazardous waste status of waste streams from the Pu-239 recovery process are delineated only as non-mixed or mixed with a common set of hazardous waste numbers (HWNs). MASS nuclear material accountability system and P/S codes allow detailed assignment of HWNs associated with each P/S code (see Tables 14 and 15 for a complete list). However, since waste items are packaged into containers based on the physical material content of the waste, without regard to P/S code, each waste container can, and does, include waste items from several P/S codes. For the containers where the P/S code of each item is known, HWNs can be assigned on a container-by-container basis.

The HWN assignment of the waste stream becomes the complete list of HWNs assigned to all P/S codes. A sort on the P/S code of each waste item in a container can determine the special case of containers containing all non-mixed waste items. If the P/S code information is missing for any item in a waste container, the container is conservatively assigned to the mixed waste stream. This is necessary for some of the older waste. In addition, some waste originally assigned to non-mixed waste streams is later discovered to contain lead shielding, and is reassigned to corresponding mixed waste streams (*Acceptable Knowledge Accuracy Report* [TWCP-AK-2.1-012]).

LANL TRU debris waste streams are not delineated beyond the organic (combustible) and heterogeneous categories to more detailed waste matrix codes. Delineation to identify detailed waste streams such as metal or glass waste has been previously attempted (see the *Los Alamos National Laboratory Transuranic Waste Characterization Sampling Plan*, TWCP-PLAN-0.2.7-001,R.0, 1997). However, as supplemental AK information is gathered on specific waste-generating operations, it is apparent that detailed delineation cannot be reliably made because TRU waste management practices at LANL have historically not made such distinctions for waste packaging purposes.

3.2.4 Waste Physical Form and Content Description: Assignment of Waste Stream Numbers

3.2.4.1 Waste Segregation Practices

Prior to April 17, 1995, debris waste was segregated only according to Pu isotopic make-up and combustibility. Although individual waste items were tracked (and recorded on WODF and DWLS forms), no attempt was made to separate them along composition or process lines. Thus, numerous waste material parameters and constituents would end up in the same drum. For this reason, all Pu-239 debris waste generated before April 17, 1995 is nominally assigned to two waste streams: TA-55-19 (predominately combustible) and TA-55-30 (predominately heterogeneous).

Between April 17, 1995 and July 17, 2001, additional segregation of debris waste was conducted. Non-combustible items were disposed of according to whether or not RCRA constituents were present (i.e., mixed vs. non-mixed). This resulted in the generation of new waste streams. Combustibles were not segregated according to matrix (i.e., rubber, plastics, cellulose-based materials, etc. were still combined), but were separated on the basis of RCRA constituent content. Therefore, from 1995 through July 16, 2001, combustibles were further categorized as either mixed or non-mixed.

Beginning July 17, 2001, all debris waste generated at TA-55 bears the label "newly generated" and falls into four distinct waste streams:

1. TA-55-19: Mixed combustible
2. LA-NCD01: Non-mixed combustible
3. TA-55-30 Mixed heterogeneous
4. LA-NHD01: Non-mixed heterogeneous

3.2.4.2 Records and Written Evidence

In addition to the segregation protocols described above, records exist that give more detailed information about the contents of some drums. For example, a subset of debris waste drums generated between 1987 and 1995 can be shown to be non-mixed based upon database records. Five primary information sources have been found that significantly augment "procedural" information such as that given in

Section 3.2.5. These are listed in Table 5 in descending order of reliability. The reliability/quality of the data source is determined by how "close" the information is to entries made by the original waste generator. The WMS list contains data entered by the generators and data were entered under a quality assurance program; it is therefore considered the most reliable source of information pertaining to TA-55 wastes. The other data sources in Table 5 provide unique information of one type or another, but the information is considered somewhat less reliable because of occasional discrepancies that arise between listed entries and original generator data (when the latter exist). The non-certified archive database is particularly useful for tracking information pertaining to "S" drums (older drums having a different numbering scheme). The WMS database is used to obtain filter dates, location information, and package dates. The certified archive database contains unique information about waste generated between 1992 and 1996, and the Sampling Plan (Rev. 0) contains information about older "legacy" drums.

Table 5. Primary Information Sources

Source #	Description
1	TA-55 WMS
2A	Archive certified Microsoft Access database
2B	Archive non-certified Microsoft Access database
3A	Sampling Plan Rev. 0
3B	LANL TRU Waste Management System Oracle database

3.2.5 Waste Container Labeling

Because the WIPP WAP requires HWN assignment on a waste stream rather than a waste container basis, several HWNs are conservatively assigned to individual waste streams. For the purposes of generator and on-site storage, however, LANL labels waste on a container-by-container basis. For this reason, the hazardous material labels on containers in storage at LANL do not always correspond to the HWNs assigned to the waste stream as described by this AK Report. Hazardous material labels are updated to meet WIPP disposal requirements just before loading waste containers into the Transuranic Package Transporter-Model II (TRUPACT-II) container for shipping to the WIPP.

3.3 Waste Generation Operations

3.3.1 Overview

3.3.1.1 Plutonium Processing Operations

Waste streams were generated from materials used in the process to recover plutonium from residues, metal fabrication, and R&D activities. The variety of plutonium handling operations includes:

- Preparing ultra-pure plutonium metals, alloys, and compounds
- Preparing (on a large scale) specific alloys, including casting and machining these materials into specific shapes
- Determining high-temperature thermodynamic properties of plutonium
- Reclaiming plutonium from scrap and residues produced by numerous feed sources
- Disassembling components for inspection and analysis
- Manufacturing of parts on a limited basis
- Processing mixtures of plutonium and uranium oxides for reactor fuels.

3.3.1.2 Generation of Plutonium-Contaminated Waste

Plutonium processing operations generate contaminated combustible waste consisting of:

- Plastic materials such as Tygon tubing, polyvinyl chloride vials, plastic bags, etc.
- Cellulose-based cleaning aids and personal protective equipment such as rags, paper wipes, laboratory coats, coveralls, booties, etc.
- Rubber- and Teflon-based products (such as rubber gloves, Teflon tape, gaskets, stoppers, etc.) used in operations

Plutonium processing operations generate contaminated noncombustible waste from:

- Small tools used in operations and glovebox maintenance
- Steel and brass cans used for storage and transfer of material
- Small equipment items such as metal labware
- Motors and pumps from equipment and facility maintenance
- Equipment such as furnaces, foundry parts, machine tools and parts, etc.
- Gloveboxes
- Ventilation ductwork and pipes
- Glass materials such as labware, bottles, windows, etc.
- Miscellaneous items such as slag, salt and crucibles

The following wastes are usually fixed with cement:

- Evaporator salts and evaporator bottoms from nitrate recovery operations
- Aqueous liquid wastes from analytical operations
- Ion-exchange resins
- Nuclear materials such as americium oxide
- Waste oils and organics (may be absorbed on vermiculite instead)
- Fine particulate materials, such as ash, dried filter residues, and hydroxide cake
- Perchloric acid solutions or perchlorate salts

NOTE: Large chunks of hydroxide cake may not be cemented, because the purpose of the cementation is to immobilize fine particulates.

Non-routine solid TRU waste items are generally large pieces of equipment that are removed from gloveboxes or laboratories. The items are disassembled if necessary and prepared for disposal.

3.3.2 Flow Diagrams

Detailed information about the plutonium recovery process can be found in the operations AK reports. The six operational areas for which AK reports have been prepared include:

- Chloride Operations (TWCP-AK-2.1-002)
- Nitrate Operations (TWCP-AK-2.1-005)
- Miscellaneous Operations (TWCP-AK-2.1-004)
- Special Processing Operations (TWCP-AK-2.1-007)
- Metal Operations (TWCP-AK-2.1-003)
- Pyrochemical Operations (TWCP-AK-2.1-006)

Generalized flow diagrams for legacy and newly generated waste (see Attachment 4) for these six operational areas indicate the P/S codes associated with each of the various sub-processes. A full block flow diagram for plutonium processing and waste management is also available (TWCP-886).

Sections 3.3.3 through 3.3.8 correspond to the six operational areas listed above. Each section describes the operations that generated waste assigned to the debris waste streams.

3.3.3 Chloride Operations

A detailed description of chloride operations can be found in *Acceptable Knowledge Report for Chloride Operations at LANL* (TWCP-AK-2.1-002).

The overall goal of chloride operations is to recover plutonium from scrap and residues and produce a purified plutonium oxide for conversion to metal. The primary feed sources are plutonium residues from pyrochemical operations, plutonium-beryllium (PuBe) neutron sources, analytical chemistry laboratory solutions, and residues from other DOE facilities. Chloride operations can be broken down into the following four steps:

- Pretreatment
- Dissolution
- Purification
- Hydroxide precipitation

Pretreatment may include sorting, crushing, and/or pulverizing feed materials prior to being fed into later steps of chloride operations. A separate pretreatment procedure is the decladding of plutonium-beryllium sources. The PuBe metal alloy is removed from the sources,

which are then entered into the chloride line for plutonium recovery along with other materials.

Dissolution uses hydrochloric acid to leach and dissolve plutonium from scrap, crucibles, residues, and various solutions, including solutions from the analytical chemistry laboratory. Enriched solutions undergo further purification and solid wastes are discarded as debris waste or sent to cement fixation in nitrate operations (Section 3.3.4).

Purification may include solvent extraction, ion exchange, and oxalate precipitation, depending on the chemical nature of the material to be purified. Ion exchange columns are used to collect plutonium and to separate plutonium from impurities. Enriched solutions may be further treated with oxalic acid to precipitate plutonium oxalate, which is converted to plutonium oxide.

Hydroxide precipitation takes plutonium in filtrate solutions from the purification steps and precipitates it with potassium, magnesium, or sodium hydroxide. Heavy metals are concentrated in the plutonium-rich hydroxide cakes. The sources of heavy metals vary but may include one or more of the following: (a) feed materials that consist of or contain these metals; (b) leaching of chromium from stainless-steel equipment components; or (c) the use of silver salt (until 1994) as an indicator of chloride content. The resulting Pu-enriched hydroxide cakes become feed material for nitrate operations, and liquid meeting the TA-50 WAC is sent to the TA-50 Radioactive Liquid Waste Treatment Facility (RLWTF) using the caustic waste line. Some hydroxide cakes are returned to the dissolution step for re-processing.

3.3.4 Nitrate Operations

A detailed description of nitrate operations can be found in *Acceptable Knowledge Report for Nitrate Operations at LANL* (TWCP-AK-2.1-005).

The overall goal of the nitrate operations is to recover plutonium from scrap and residues, and produce a purified plutonium oxide for conversion into metal. The primary feed sources for the nitrate operations are plutonium residues from other recovery operations (e.g., chloride operations), metal preparation, metal fabrication, analytical laboratory operations, and residues from other DOE facilities. Nitrate operations can be broken down into the following five steps:

- Pretreatment
- Dissolution
- Purification

- Evaporation
- Cement fixation

Pretreatment primarily includes physical processes used to separate scrap and residues for the next step—dissolution. It may include alcinations, caustic leaching, chemical separation (hydroxide or oxalate precipitation), crushing and pulverizing, distillation, filtering of liquids or oils, incineration, magnetic separation, passivation, scraping, or sorting.

After pretreatment, solids are sent to dissolution if plutonium concentrations are above the DL. If concentrations are below the DL, solids are sent to solid waste packaging. Solids below the DL are sent to cement fixation or solid packaging. Liquids are sent to purification if plutonium concentrations are above the DL. Liquids with plutonium concentrations less than the DL are sent to the RLWTF if they meet the TA-50 RLWTF WAC or to evaporation and cement fixation. If the liquids do not meet the TA-50 RLWTF WAC, they are further treated until they meet that WAC.

Dissolution includes various steps that generate plutonium nitrate solutions for feed into the purification step. Primary chemicals used in dissolution are nitric acid, calcium fluoride, and/or hydrofluoric acid. Filtered solids are returned to the dissolution operation until plutonium concentrations are below the DL. Once the plutonium concentrations are below the DL, the material is sent to cement fixation for disposal. Debris items are disposed after removal of plutonium contamination above the DL. Plutonium-bearing solutions are sent to purification.

Purification consists of ion exchange and precipitation operations. The ion exchange operations use resin-filled columns to collect plutonium, which binds to the resin while impurities flow through the columns; an eluting agent is then used to release purified plutonium in solution. The enriched solutions are then sent to oxalate precipitation. Calcination of the oxalate converts the plutonium to oxide form. The depleted liquids are sent to the evaporator or the RLWTF. The calcined plutonium oxides are sent to the vault.

The evaporator processes plutonium-poor liquids in order to re-concentrate plutonium, if possible, or to reduce the volume of liquid waste. Evaporator bottoms are either sent back to ion exchange or discarded to cement fixation, depending on their plutonium content. Heavy metals that might be present are concentrated in this operation.

In the cement fixation step, wastes with low Pu concentrations are collected and immobilized in cement. Most of the wastes generated

under these operations are classified as cemented wastes and would not normally be part of any debris waste streams.

3.3.5 Miscellaneous Operations

A detailed description of miscellaneous operations can be found in *Acceptable Knowledge Report for Miscellaneous Operations at LANL* (TWCP-AK-2.1-004).

R&D projects involve applied techniques and methods designed to study and improve operations associated with the purification, separation, extraction, recovery, and characterization of actinides (primarily plutonium). General types of these miscellaneous operations are described below.

Extraction/Separation Studies involve the processing of actinide hydroxide cakes generated from chloride and nitrate operations. Research in this area also contributes to the development of sensors and instrumentation for online chemical analysis, and improvements in the purification operation. The R&D activities are non-routine and developmental in nature. The activities involve research, process development, small scale trouble-shooting, and occasionally preparation of various isotopes and isotopic mixtures of plutonium, uranium, americium, and neptunium.

Halogenation Studies involved the fluorination of samples containing plutonium residues. A gas flow loop was used to pass a fluorinating agent through a gas-solid reactor where plutonium in the solid residue reacted chemically to form solid PuF_4 or gaseous PuF_6. Gaseous PuF_6 was trapped in a cold trap, distilled, and reduced to PuF_4. Separation operations involving experimental chlorination operations were similar to the fluorination procedures. A gas loop was used to flow carbon tetrachloride and perchlorocarbons through a gas-solid reactor to chlorinate plutonium oxides to form recoverable plutonium compounds. These studies produce only legacy waste.

Non-Aqueous Dissolution/Extraction Operations involves the dissolution of actinide compounds and actinide-containing matrices in superacid media. The superacid solutions are evaporated to leave solid products that are analyzed by a variety of methods. The study of the organometallic chemistry of uranium and thorium in non-aqueous solvents consists of a variety of small-scale organoactinide operations. The organoactinide operations are designed to study the synthesis of new actinide compounds in non-aqueous media. These operations also examine the characterization and reaction chemistry, and consider applications to existing actinide processing technology. Other non-

aqueous operations support fundamental and applied actinide chemistry research, by studying the preparation of solvents and reagents, synthesis of new chemical compounds, and characterization and analysis of new chemical compounds using wet chemistry methods and analytical instrumentation.

Analytical Operations include all analytical techniques performed in Room 124 of the Plutonium Facility. Operations involve the analysis of plutonium and americium, RCRA metals, and trace metals. Originators provide samples, which are prepared for further analyses, such as inductively coupled plasma (ICP) and X-ray energy spectroscopy (XES). Unused liquid samples are returned to the originator, sent to radiochemistry for counting, or sent to recovery operations.

R&D Efforts. Several small-scale R&D efforts primarily focus on plutonium recovery including the following activities:

- Fluoride sintering of PuO_2 takes advantage of the presence of fluoride to aid the formation of a sintered mass of PuO_2 powder at temperatures above 700°C.

- Chlorination of Pu oxides involves oxides with tantalum chips from Rocky Flats Environmental Technology Site (RFETS). Chlorination is used to recover plutonium from potassium chloride and sodium chloride matrices.

- Processing of molten-salt extraction (MSE) salts generated at LANL and RFETS.

- Recovery of plutonium from ash involving plutonium/thorium oxide mixtures.

- Processing of neptunium oxide and metal to remove the protactinium daughter in order to use the neptunium for NDA standards.

Measurement/Detection Operations and Studies involved the inspection of oxides and metals. Materials were retrieved from the vault, brought to the glovebox, inspected and sampled if necessary, then repackaged and returned to the vault. Assay methods included XES, laser based spectroscopy, and other spectroscopic techniques. In addition to elemental and isotopic analyses, other measurement studies were designed to calculate the surface area and pore size distribution of a sample and to analyze its surface characteristics. These studies produce only legacy waste.

Pyrochemical Matrix Studies conducted from 1986-1992 involved rod milling prior to screening. This operation had two objectives: (1) blending large batches of homogeneous plutonium metal oxides for pyrochemical operations, and (2) dissolving plutonium metal oxides for nitrate operations. The operation changed in August 1992 when a need developed to blend oxides to provide feed material for making NDA standards. In February 1995 to the present, the operation changed again, with the objective of determining the effect of pyrochemical salt matrices on the accuracy of NDA measurements. Activities involve crushing, pulverizing, blending, roasting, and sieving pyrochemical salts. The results are used to determine protocols for handling and processing the salts and to correct bias measurements. The feed material consists of high-purity oxides used in the fabrication of standards for use at LANL and throughout the DOE complex.

Hydrothermal Processing involves the reaction of aqueous/organic mixtures, pure organic liquids, or contaminated combustible solids (e.g., ion exchange resins, plastic filters, and cellulose rags) under supercritical (high temperature and pressure) conditions. Feed streams include, but are not limited to, carbon tetrachloride, tributyl phosphate, and organic solvents. Effluents are gases, liquids, and salts. Organic components are oxidized to carbon dioxide. Nitrate contaminants are converted to nitrogen gas and some nitrous oxide. Components such as chlorine, sulfur, and phosphorus are oxidized and converted to acids or salts. Gases are liberated; solids and liquids are collected for recovery or disposal.

Electrochemistry Experiments develop methodologies to decontaminate items, replace operations that produce large amounts of waste, and enhance chemical reactions. The operation involves uranium decontamination of disassembled weapon components from various sites with various levels of plutonium surface contamination. The operation is strictly an aqueous activity in which an alkaline solution is reacted with the components to precipitate uranium. Significant amounts of metal can be stripped in a short period. The solution containing the precipitated uranium salts is then dried for mass balance.

Metallography Operations characterize the microstructure of metallic or ceramic pieces to verify and establish the quality and effectiveness of welds. Materials examined consist of plutonium and uranium carbides, nitrides, and oxides, as well as zirconium and tantalum alloys, and stainless steel. Metal pieces (pellets) are cut with a diamond saw. Ceramic pieces are subjected to grinding with standard metal grinding media (e.g., papers impregnated with silicon carbides and diamond). The materials are polished with several different chemical compounds.

Waste Management Operations. P/S code RD was used in Room 432 from 1984–1986. It allowed for tracking of demonstration drums (one drum each year) that were packaged and prepared in accordance with the TA-55 Attachments to the Certification Plan (TWCP-701) to meet the WIPP requirements at that time. Packaging of these drums did not of itself result in the generation of TRU waste. The waste drums that were packaged contained non-mixed TRU waste.

Operations under P/S code NCD occurred from April 1989–April 1991 in Room 432. This P/S code was established to provide a mechanism for dealing with TRU drums that did not confirm TA-55 characterization information (e.g., recorded weight or nuclear material content). Non-confirming drums were temporarily set aside until such time as personnel could reprocess them under P/S code WM to correct the non-confirming condition. After April 1991, non-confirming drums were dealt with immediately, and P/S code NCD was no longer needed.

P/S code WM is currently limited to waste generated from the TRU solid waste management operation in Room 432. This practice has been in place since the beginning of 1993. Room trash boxes from Building PF-4 have always been handled as low-level waste. However, when the boxes were assayed to verify contamination levels, some were determined to be TRU waste. These boxes of room trash were diverted to Room 432 for repackaging as TRU waste. From May 1987 through 1992, these boxes were tracked using P/S code XO or X0. These codes were changed to P/S code WM after 1992.

Additional controls were placed on room trash after 1992 and continue to the present. Trash is assayed with the Multiple Energy Gamma Assay System (MEGAS). When a container is rejected because of MEGAS data, the rejected container is returned to the originator for removal of any "hot" item(s). This operation also allows greater control to prevent discarding regulated materials (e.g., RCRA constituents) in room trash.

P/S code X0 is designated for waste materials that can not be associated with a specific room, such as a hallway, mezzanine offices, rest rooms, change rooms, basement, pump rooms, and trolleys. The waste from all these areas, except the pump rooms and trolleys, would be low-level waste and no RCRA constituents are associated with the waste items.

P/S code XO indicates waste materials that are generated within specific rooms but cannot be associated with an individual P/S code in that room.

Material Management Operations. P/S codes M1, M2, MM, and M4 are used to introduce and remove items from the glovebox line. TRU waste typically associated with bag-out operations (e.g., stubs, tape) is

packaged with other waste items and assigned HWNs based on the P/S code from which the waste originated. Waste generated in the material management rooms is associated with glovebox maintenance operations. No unit operations are conducted in these rooms, therefore no HWNs are assigned to waste originating from them. The exception is lead-lined glovebox gloves assigned HWN D008.

3.3.6 Special Processing Operations

A detailed description of special processing operations is found in *Acceptable Knowledge Report for Special Processing Operations at LANL* (TWCP-AK-2.1-007).

Special Processing includes operations for Material Type (MT) 42 and R&D activities for MT 52. (See Section 4 and Table 10 for descriptions of plutonium material types.) Because processing MT 42 is a smaller-scale version of the recovery processes used for MT 52, MT 42 processing has five main recovery steps:

- Head-end operations
- Nitrate ion exchange operations
- Chloride ion exchange operations
- Separation and purification by precipitation
- Pyrochemical operations

Only head-end operations and separation by purification and precipitation are covered here. Chloride ion exchange operations, nitrate ion exchange operations, and pyrochemical operations are covered in Sections 3.3.3, 3.3.4, and 3.3.8, respectively.

Head-end Operations leach tools, labware, crucibles, rags, etc., in nitric acid to remove recoverable plutonium. Plutonium oxide is typically calcined as part of head-end operations.

Separation andPurification by Precipitation is a method for removing plutonium from aqueous solutions. The most common precipitation methods utilize oxalate, hydroxide, and peroxide anions. By selectively precipitating the plutonium, many of the metals remain in solution, thereby purifying the plutonium.

All wastes generated by MT 52 R&D operations are replicated for MT 42 but carry different P/S codes to differentiate and identify the radionuclide content of the waste. Outputs from Special Processing include high purity metal for casting and machining.

3.3.7 Metal Operations

A detailed description of metal operations is found in *Acceptable Knowledge Report for Metal Operations at LANL* (TWCP-AK-2.1-003).

The activities included in metal operations can be divided into three groups:

- On-going metal operations
- Developmental metal operations
- Reactor fuel development

The main goal of metal operations is to take the high purity metal produced by pyrochemical operations and produce shaped metal pieces. On-going metal operations include R&D activities, alloy development, metal casting, welding, coating, and machining/metal work on various metals. Developmental metal operations include the Advanced Recovery and Integrated Extraction System (ARIES) project, assembly operations, burst testing of shells, experimental laser welding, furnace operations, and various other experimental activities. In reactor fuel development, enriched uranium oxide, depleted uranium oxide, and/or plutonium oxide feeds are blended and mixed with graphite. Various operations are performed to convert the feed material into pellets that can be used for fuel. Testing and R&D are done on the fuel pellets.

3.3.8 Pyrochemical Operations

A detailed description of pyrochemical operations is found in *Acceptable Knowledge Report for Pyrochemical Operations at LANL* (TWCP-AK-2.1-006).

Pyrochemical operations include metal preparation, metal purification, and ancillary metal production operations. Pyrochemical outputs are most often high-purity metal feed materials for metal operations.

3.3.8.1 Metal preparation includes the following:

Metal Preparation Line. The metal preparation line produced plutonium metal from fluoride salts. Hydrogen fluoride gas was reacted with plutonium oxides obtained from calcinations of oxalate or peroxide precipitates from the aqueous nitrate or chloride process lines. The plutonium compound was further reacted with various chemicals to produce plutonium metal, which could then be recovered as a small globule, or button, by breaking the crucible. This operation generated only legacy waste.

Direct Oxide Reduction (DOR). In the single pass DOR operation, plutonium oxide and calcium metal is reacted in molten calcium chloride ($CaCl_2$), or $CaCl_2$ mixed with calcium fluoride (CaF_2), to produce plutonium metal. The reaction is conducted in a magnesium oxide (MgO) crucible. After cooling, a plutonium metal button is removed by breaking the crucible. A layer of salt above the button contains unreacted oxide and metal shot, which is sometimes recovered by addition of fresh salt plus calcium metal.

Multiple-Cycle Direct Oxide Reduction (MCDOR) is used to minimize the salt waste. During the MCDOR operation, the molten salt is regenerated by sparging the $CaCl_2$-CaO mixture with chlorine gas between multiple plutonium metal production runs. After approximately five cycles of metal production, the mixture is cooled and the salt and metal phases are separated.

3.3.8.2 Metal purification operations include the following:

Molten Salt Extraction (MSE) is used to separate americium and the more reactive elements such as rare earth elements, alkali metals, and alkaline earth metals from plutonium metal (TWCP-352). This operation is employed only if the americium content is greater than 1000 ppm. In the original operation (from 1979 to 1988), magnesium chloride ($MgCl_2$) was added to the impure plutonium metal in a molten salt of sodium chloride (NaCl) and potassium chloride (KCl), contained in a MgO crucible, and heated to 750 °C. The magnesium chloride oxidized americium to $AmCl_3$, although some plutonium was also converted to the chloride salt form. In 1988 and continuing to the present, the MSE operation uses plutonium chloride ($PuCl_3$) produced by in-situ chlorination in a tantalum crucible. Ninety percent of the americium and ten percent of the plutonium are transferred from the feed metal to the salt. After cooling, the salt and metal are mechanically separated. The salts are transferred to the salt stripping operation.

Electrorefining (ER). The ER operation takes impure metal from the MSE and MCDOR (DOR) operations and produces high purity plutonium metal. Impure plutonium is cast as an anode, which is then placed in a magnesium oxide crucible with a salt mixture, a metal cathode (typically tungsten), and a seeding reagent that is $MgCl_2$ or $PuCl_3$. After the anode and salt are melted, current is applied to the system, and

plutonium at the anode is oxidized to plutonium ions that travel to the cathode and are reduced back to the metal state. Impurities in the original plutonium anode that are less electroactive than plutonium (including cadmium, chromium, lead, and silver) remain in the anode, while impurities more electroactive than plutonium (including barium) remain in the molten salt. After cooling, the crucible is broken and the residues are physically separated from the high purity product metal. Anode heels were sent to pyroredox from 1984 to 1986. Currently, salts are sent to chloride operations or carbonate oxidation/distillation.

From 1987 to 1989, secondary solvent metals such as cadmium, bismuth, lead, and gallium were added to experimental studies of the ER operation.

3.3.8.3 Ancillary metal production operations include the following:

Salt Stripping. The MSE and ER salts are further treated by salt stripping, oxygen sparging or carbonate oxidation, and salt distillation. The salt stripping operation treats the residue by melting and stirring the salt with calcium metal in a magnesium oxide crucible at 850 °C. This treatment reduces the plutonium in the salt to metal and allows the metal to coalesce for physical removal and recovery. After cooling, the crucible is broken and the metal physically separated and recycled to the ER operation or burned to oxide and sent back through aqueous recovery. The crucible shards are leached in hydrochloric acid, and then discarded.

Oxygen sparging and carbonate oxidation (since 1996) are used to ensure that any plutonium, americium, or metallic sodium or potassium left in the salts are converted to nonpyrophoric oxide forms.

Vanadium pentoxide (V_2O_5) was used in place of carbonate to convert metals to oxide as part of the salt stripping operation from February to June 1998. Wastes that potentially contain residual V_2O_5 were, at one time, assigned the EPA hazardous waste code P120. However, this assignment has been rescinded: see Section 8.1.

Salt Distillation allows for the recovery of plutonium oxide from the chloride salt and produces purified chloride salt for reuse.

Pyroredox. The pyroredox operation was used to recover plutonium from spent anode heels in the mid- to late 1980s. The anode heel was polished with calcium metal to remove surface oxide, and then oxidized to plutonium (III) with zinc chloride ($ZnCl_2$) in molten KCl, forming plutonium chloride ($PuCl_3$). Elements more electroactive than zinc (including barium) were oxidized into the salt phase, and the zinc formed a metal button. The salt was then mixed with calcium metal in $CaCl_2$ to reduce the plutonium to the metal phase, as well as reducing all elements less electroactive than calcium. The salt phase containing small amounts of the impurity barium was mechanically separated from the metal phase and discarded. The metal phase containing zinc was placed in the vault or further treated, and the plutonium eventually was routed back to ER. This operation generated only legacy waste.

Ingot Casting. Metal is melted in a MgO crucible to cast the ingot.

Metal Coalescence. Metal coalescence is used for plutonium turnings to coalesce the turnings into a metal button. Calcium metal and $CaCl_2$ are added to a MgO crucible along with the turnings and melted.

Metal Oxidation. Small pieces of metal remaining on furnace or crucible surfaces are collected for conversion to the oxide phase. These metal pieces are placed in a furnace for the conversion operation. The oxide is then transferred to the vault.

Neptunium. Neptunium residues stored in the vault were processed in 1993. This operation generated only legacy waste.

Pickling. Pickling (i.e., leaching metal with a strong acid) is typically a head-end operation. After a few furnace runs, plutonium metal begins to accumulate on tools and furnace parts so it becomes necessary to leach the plutonium from these items. In addition, after calcium metal reduction operations such as metal preparation, direct oxide reduction, and molten salt extraction, plutonium metal will have an adherent skin of calcium metal. Hydrochloric acid is used to dissolve Pu from tantalum furnace parts, and nitric acid is used to pickle Pu from other metals.

Plutonium Trichloride Preparation was accomplished by bubbling a carrier gas (chlorine) through carbon tetrachloride and passing the mixed gas stream through a bed of plutonium oxide at 500–600 °C before being absorbed in a 5–6 M (molar) potassium hydroxide solution. In this operation (Jan. 1987–Jun. 1989) the carbon tetrachloride was broken down into phosgene, carbon monoxide, and carbon dioxide gases. In June 1989 the operation switched to the use of phosgene gas as the carrier gas until the operation ended in May 1991. Feed material was high purity oxides from the vault or from other P/S codes. The product plutonium trichloride was reduced to metal by the MSE or ER operations. This operation only generated legacy waste.

3.4 Material Inputs to the Waste Generation Operations

The feed materials for recovery operations that generate TRU waste are listed in Table 6. These feed materials are obtained either from the storage vault, as outputs from various other Pu-recovery operations, or from sources outside LANL, including other DOE facilities.

These feed materials fall into four general categories:

- Pure Pu metal to be recycled from pits and sealed sources or to be reworked into desired shapes or chemical forms
- Intermediate Pu products in purification operations, in the form of solutions, oxides, hydroxides, salts, anode heels, etc.
- A wide variety of matrices contaminated with Pu above the DL, such as ash, salts, equipment, and solutions
- Experimental R&D feed materials

3.5 Chemical Inputs to the Waste Generation Operations

Chemical constituents of inputs are compiled from chemical lists contained in procedures and from subject matter expert (SME) input. Individual operations AK reports contain detailed assessments of these chemical inputs and of the applicability of EPA HWNs. In this section, discussion of the chemical inputs are divided into the following categories:

- Acids and bases
- Gases and cryogenic fluids
- Metals
- Inorganic chemicals
- Organic chemicals

Table 6. Feed Materials for Operations Contributing to LANL Waste Streams

Feed Material	Potential Presence of RCRA-Regulated Substances*	P/S Codes and Associated Operation Areas
Analytical laboratory solutions	Potentially contaminated with RCRA-regulated constituents • All analytical laboratory solutions are potentially contaminated with chromium (D007), lead (D008), and mercury (D009) • C-AAC (formerly CLS-1) solutions potentially contaminated with mercury (D009) and lead (D008), as well as RCRA-listed organic substances used as solvents, including acetone (F003), butyl alcohol (butanol, F003), carbon tetrachloride (D019), chlorobenzene (F002, D021), chloroform (D022), methanol (F003), methylene chloride (F002), tetrachloroethylene (F002, D039), xylene (F003) (Cl-25/TWCP-3547).	Chloride operations: CLS, CW (analytical laboratory solutions from LANL Group C-AAC (formally CLS-1); Miscellaneous operations: APD (C-AAC (formerly CLS-1) solutions); ACL, ICP (TA-55 solutions) Nitrate operations: CF, HP
Anode heels	Typically contaminated with RCRA-regulated heavy metals cadmium (D006), chromium (D007), lead (D008), and silver (D011). Heavy metals arsenic (D004), mercury (D009), and selenium (D010) are not present because they are volatilized from the Pu oxide feed at the high temperatures to which this material is subjected in P/S codes ER, RM, and SS (electrorefining step).	Nitrate operations: AS, BF, BU Pyrochemical operations: RA, SS
Ash from P/S codes ETD, IS, SB, TDC, or from other DOE facilities	Usually suspect contaminated with barium (D005), cadmium (D006), chromium (D007), lead (D008), and silver (D011). Arsenic (D004), mercury (D009), and selenium (D010) metals are volatilized at high temperatures if present in the oxide and chloride forms.	Miscellaneous operations: CK, CV, FDL, FLU, SO, XP Nitrate operations: AL, AT, ATL, ED, HGMS, HRA, IS, MPD, PTS, RC, SC Special processing operations: ACD, IAM, SB, SL
Crucible pieces (tantalum, magnesium oxide)	Typically fairly pure, no RCRA substances present	Chloride operations: CL Nitrate operations: MAS, SC Special processing operations: ACD, SL
Disassembled weapons components (pit disassembly)	High-purity Pu and U material types, no RCRA substances present	Metal operations: CA, PH, SRL Miscellaneous operations: EDC Nitrate operations: BM, RB, RBJ
Experimental R&D feed materials; various isotopes and isotopic mixtures of actinides in various matrices	Variable purity; may or may not contain RCRA substances	Miscellaneous operations: AD, CV, EXT, HRS, RASS, SA, XES, XP Nitrate operations: MAS
Hydroxide cakes (output from P/S codes CLS, CW, CXL, DO, POSM, PRR)	Typically contaminated with RCRA-regulated heavy metals cadmium (D006), lead (D008), mercury (D009), silver (D011), and possibly chromium (D007)	Miscellaneous operations: AD Nitrate operations: CD, HCD, HD, LG2 Special processing operations: DO, POSM

Table 6. Feed Materials for Operations Contributing to LANL Waste Streams (continued)

Feed Material	Potential Presence of RCRA-Regulated Substances*	P/S Codes and Associated Operation Areas
Miscellaneous materials contaminated with Pu (e.g., sand, slag, tools, crucibles, metal, glass, plastic, labware, scrap, rags, glovebox sweepings, pump oils, HEPA filters)	May be contaminated with RCRA-regulated heavy metals silver (D011), cadmium (D006), mercury (D009), lead (D008), and possibly chromium (D007)	Miscellaneous operations: APD Nitrate operations: ATL, BAC, CPOD, CR, ED, ETD, GMS, HGMS, IS (combustible material), LG1 (non-combustible material), MAG, MAS, MELL (cellulosic material), ML (metal equipment), NC (non-combustible material), NL (non-combustible material), PA (glovebox sweepings), PAF, RO (organics), SC, SP, TSC (cellulosic material), VC, ZD Pyrochemical operations: PK (hardware, metal, anode chips from other P/S codes) Special processing operations: ACD, DO, SB, SL
MSE salts	Typically fairly pure, suspect contaminated with barium (D005)	Chloride operations: MB, MS Miscellaneous operations: XP Nitrate operations: MB, PS Special processing operations: RM
Neptunium residues from vault	No RCRA-regulated substances	Pyrochemical operations: Neptunium (only active in 1993)
Pu chlorides and fluorides	Variable purity; may or may not contain RCRA substances	Miscellaneous operations: FDL, SO Pyrochemical operations: ER, SD, SS Special processing operations: RM
Pu metal or metal alloy from vault or from various operations	High purity, no RCRA-regulated substances, unless noted otherwise	Metal operations: AAP, AO, ARI, BC, BT, CA, DA, ELW, EVAC, FSPF, ITF, ITF4, JA, KBTF, MA, MBC, MW, PCH (variable purity), PD, PE, PF, PH, RL, SRL, VD, WE, WLT Miscellaneous operations: AC, AC1, AC2, EXT, LIBS, ME, SA, SMP, VS Nitrate operations: ATL, BM, BU, MF, PAF, VP1 Pyrochemical operations: CRD (variable purity), MO, SCB, SS, SSMD Special processing operations: ACC (variable purity), PI (variable purity), PPD, POSM, RM, SB
Pu oxalates	Typically fairly pure, no RCRA substances present	Nitrate operations: CC, DF, HC

Table 6. Feed Materials for Operations Contributing to LANL Waste Streams (continued)

Feed Material	Potential Presence of RCRA-Regulated Substances*	P/S Codes and Associated Operation Areas
Pu oxides	Variable purity oxides from P/S codes RB, RBJ and others, and from the vault; suspect contaminated with RCRA-regulated heavy metals cadmium (D006), chromium (D007), and lead (D008) High purity oxides from P/S codes CA, DO, and MA, and from the vault; may or may not contain RCRA substances	Metal operations: DOP (high-purity Pu and other radionuclides as oxides) Miscellaneous operations: CK, CV, EOC, EXT, FDL, FLU, IB, LI, LIBS, SO, STF, VS, XP Nitrate operations: ATL, BL, CH, CPOD, DP, ED, FC, HRA, LC, MPD, OD, PT, RB, RBJ, SP, SSD, UPS, US, US2 Pyrochemical operations: MP (generally high purity), OR (variable purity), PTP Special processing operations: DO, PX, POSM
Pu-Be sources	High purity constituents, no RCRA-regulated substances	Chloride operations: PB, PUB
Pyrochemical salts	Typically fairly pure, no RCRA substances other than barium (D005) are present	Chloride operations: MB, MS, PRR Miscellaneous operations: EXT, IB Nitrate operations: COD, COL, MB Special processing operations: DO
Reactor fuel pellets	High purity Pu and U material types, no RCRA-regulated substances	Miscellaneous operations: ME
Stainless steel and/or tantalum residues from decladding of Pu-Be sources	High purity metals, potential leaching of chromium (D007) from stainless steel if subjected to strong acid	Chloride operations: PUB

* The information in this column is highly generalized. Applicability of specific HWNs to an operation as a result of the feed material must be determined on a case-by-case basis because the presence and fate of contaminants is time and function dependent. These aspects are discussed in the AK reports.

3.5.1 *Acids and bases.* Acids used in the Pu recovery operations are ascorbic acid, formic acid, hydrochloric acid, hydrofluoric acid, nitric acid, oxalic acid, perchloric acid, phosphoric acid, stearic acid, sulfuric acid, and superacids (e.g., HSO_3F). Bases used in the operations are calcium hydroxide, magnesium hydroxide, potassium hydroxide, and sodium hydroxide. No EPA HWNs are applicable to the use of these chemicals in the recovery operations for the following reasons:

- D001 (oxidizer), D002 (corrosivity), and D003 (reactivity) do not apply to the solid waste because there are no free liquids in this waste.
- D001, D002, and D003 also do not apply despite the possible production of perchlorate salts in perchloric acid solutions because:
  - Perchloric acid solutions are sent to cement fixation.
  - Perchlorate salts used in P/S code FF were sent to cement fixation (TWCP-5158).

  Any perchlorate salts that might be present on rags are removed when the rags are rinsed before being discarded.
- The EPA HWNs U123 and U134 associated with formic acid and hydrofluoric acid are not applicable to the manner in which these chemicals were used in the operations covered by this report.
- None of the acids or bases are F, K, or P-listed chemicals

Table 7 provides a list of these acids and bases, their HWN, P/S codes in which they were used, and the applicability of the HWNs to the use of these chemicals in the plutonium recovery process.

3.5.2 *Gases and cryogenic fluids.* The following gases and cryogenic fluids used in the recovery operations are not identified as having hazardous characteristics in 40 CFR Part 261, including Appendix VIII in that regulation:

- Argon
- Carbon dioxide
- Chlorine
- Dioxygen difluoride (FOOF)
- Halogen fluorides
- Hexafluoroethane
- Hydrogen chloride
- Krypton fluoride
- Methane

Table 7. Acids, Bases, and Gases in Operations Contributing to TA-55 Waste Streams

Acid, Base, or Gas and P/S Code in Which It Was Used	Comments on Applicability of RCRA Codes
Appendix VIII Gases: • Fluorine (P/S CV, FDL, FLU, PI, SO) • Hydrogen fluoride (P/S MP, PI) • Nitrogen dioxide (P/S HRS) • Phosgene gas (P/S PTP)	P056 (fluorine), P078 (nitrogen dioxide) and P095 (phosgene) are not applicable to the use of these gases in the recovery operations. Compressed gas cylinders are kept outside of the gloveboxes; most are even outside the building, and the gases are plumbed into the glovebox (TWCP-4164). Thus, the gas cylinders are not discarded with TRU wastes. D003 (reactivity) does not apply to phosgene because any excess chemical was passed through a solution of sodium hydroxide or potassium hydroxide, thereby producing a chloride salt solution.
Formic acid (P/S EV)	U123 not applicable because there is no record of unused or unspent chemical in the glovebox.
Hydrofluoric acid (P/S AC, AC1, AC2, AC3, AX, SA)	U134 not applicable because there is no record of unused or unspent chemical in the glovebox.
Perchloric acid (P/S AD, AC, AC1, AC2, AC3, AX, SA)	D001 (oxidizer), D002 (corrosivity), and D003 (reactivity) do not apply despite the possible production of perchlorate salts in perchloric acid solutions because: • Perchloric acid solutions are sent to cement fixation. • Perchlorate salts used in P/S code FF were sent to cement fixation (TWCP-5158). • Any perchlorate salts that might be present on rags are removed when the rags are rinsed before being discarded.
Non-Appendix VIII Acids: ascorbic acid, formic acid, hydrochloric acid, hydrofluoric acid, nitric acid, oxalic acid, phosphoric acid, stearic acid, sulfuric acid, and superacids (e.g., HSO_3F) (Multiple P/S codes)	D001 (oxidizer), D002 (corrosivity), and D003 (reactivity) do not apply to the solid waste because there are no free liquids in this waste.
Non-Appendix VIII Bases: calcium hydroxide, magnesium hydroxide, potassium hydroxide, and sodium hydroxide. (Multiple P/S codes)	D001 (oxidizer), D002 (corrosivity), and D003 (reactivity) do not apply to the solid waste because there are no free liquids in this waste.
Non-Appendix VIII Gases: argon, carbon dioxide, chlorine, dioxygen difluoride (FOOF), halogen fluorides, hexafluoroethane, hydrogen chloride, krypton fluoride, methane, nitrogen (gas), nitrogen (liquid), perfluoropropane, and tetrafluoromethane (Multiple P/S codes)	D001 (oxidizer), D002 (corrosivity), and D003 (reactivity) do not apply to the solid waste because there are no free liquids in this waste.

- Nitrogen (gas)
- Nitrogen (liquid)
- Perfluoropropane
- Tetrafluoromethane

The following gases used in the recovery operations are identified in Appendix VIII of 40 CFR Part 261 as having hazardous characteristics. The chemical name is followed by the listed EPA HWN and the P/S codes in which the gas is used:

- Fluorine (P056) is used in P/S codes CV, FDL, FLU, PI, SO
- Hydrogen fluoride (U134) is used in P/S codes MP, PI
- Nitrogen dioxide (P078) is used in P/S code HRS
- Phosgene gas (P095) is used in P/S code PTP

No EPA HWNs are applicable to the use of these gases in the recovery operations. Compressed gas cylinders are kept outside of the gloveboxes; most are even outside the building. The gases are plumbed into the glovebox (TWCP-4164).

Table 7 provides a summary of these gases, their HWN, P/S codes in which they were used, and the applicability of the HWNs to the use of these chemicals in the plutonium recovery process.

The gas cylinders are not discarded with TRU wastes. Additional reasons the HWNs are not applicable include:

- D002 (corrosivity) does not apply to the use of hydrogen fluoride because there are no free liquids in the solid TRU waste.

- D003 (reactivity) does not apply to phosgene because any excess chemical was passed through a solution of sodium hydroxide or potassium hydroxide, thereby producing a chloride salt solution.

- P056 (fluorine), P078 (nitrogen dioxide) and P095 (phosgene) are not applicable to the listed recovery operations because of the manner in which these gases are used in the operations covered by this report.

- Hydrogen fluoride (U134) is listed in Appendix VIII of 40 CFR Part 261 for its corrosive and toxic characteristics. However, this code is not applicable to the manner in which this gas is used in the operations covered by this report.

3.5.3 *Metals*. The following metals used in the recovery operations are not identified as having hazardous characteristics in 40 CFR Part 261,

including Appendix VIII of that regulation: bismuth, bismuth-tin alloy, calcium, copper wool, gallium (metal, oxide or salt), gold, lanthanides, lutetium, niobium +1 percent zirconium metal, platinum, platinum-rhodium alloy, tantalum (metal, alloy, oxide or salt), titanium, uranium powder (depleted), vanadium, and zirconium alloy.

Several metals used in recovery operations are identified in 40 CFR Part 261 or in Appendix VIII of that regulation as having hazardous characteristics. The bullets below list the chemical name, the associated EPA HWN, the P/S codes in which the metal is used, and the applicability of the EPA HWNs for use of these metals in the recovery operations:

- Alkaline earth metals (D003) are used in P/S codes AC, AC1, AC2, and OR; it is possible that one or more of these are pyrophoric. However, EPA HWN D003 does not apply to P/S codes AC, AC1, AC2, or OR because the metals are consumed or oxidized before discarding.

- Arsenic (D004) was used in P/S code PE between 1984 and 1985, and EPA HWN D004 is applicable to P/S code PE during this period.

- Cadmium (D006) applies to a limited number of anode heels produced in P/S codes ER, PX, and SS using cadmium as a solvent.

- Lead (D008) is used in P/S codes DOP, ER, KBTF, PX, and SS. For combustible waste, EPA HWN D008 is applicable to P/S codes DOP, KBTF, and PX. For P/S codes ER and SS, D008 is only applicable to the metal waste (TWCP-5167).

- Tin-lead (D008) solder was used in sensors in P/S code BT, but D008 is only applicable to the metal waste from this P/S code, and not to the combustible waste.

- Mercury (D009) applies to P/S code SSMD, in which it was used for about one week in the summer of 1994.

- Nickel powder was used in P/S code CO as a sintering aid. This metal is listed in Appendix VIII but no HWN is given.

- Sodium (D003) was used in P/S code EL. However, D003 does not apply in this case because excess Na is dissolved in Dowanol 80.

- Stainless steel (contains chromium, D007) was used in P/S code WE. However, EPA HWN D007 does not apply in this case. There is no

potential to leach chromium because stainless steel is not exposed to strong acids in P/S code WE.

Table 8 provides a summary of these metals, their HWN, P/S codes in which they were used, and the applicability of the HWNs to the use of these chemicals in recovery operations.

3.5.4 *Inorganic chemicals.* The following inorganic chemicals used in the recovery operations are not identified as having hazardous characteristics in 40 CFR Part 261, including Appendix VIII in that regulation: aluminum chloride, aluminum fluoride, aluminum nitrate, aluminum oxide, ammonium chloride, antimony pentafluoride, bromine, calcium carbonate, calcium chloride, calcium fluoride, calcium nitrate, cerium nitrate, cesium chloride, cobalt nitrate, dicesium hexachloroplatinate (DCHP), ferric ammonium sulfate hydrate, ferric nitrate, ferrous ammonium sulfate, ferrous chloride, ferrous sulfamate, graphite, gypsum cement, hydrogen peroxide, hydroxylamine chloride, hydroxylamine hydrochloride, hydroxylamine nitrate, iodine, lanthanum nitrate, lithium chloride, magnesium chloride, magnesium oxide, magnesium perchlorate, molybdenum oxide, phosphates, Portland cement, potassium chloride, potassium fluoride, potassium permanganate, potassium thiocyanate, silicone lubricant, sodium bicarbonate, sodium carbonate, sodium chloride, sodium chlorite, sodium citrate retarder, sodium dithionate, sodium nitrate, sodium nitrite, sodium oxalate, sodium sulfate, sodium tetraborate, stannous chloride, thorium oxide, uranium oxide (depleted), zinc chloride, zinc stearate, and zirconium carbide. Some operations indicate the use of nitrate, chloride, carbonate, bicarbonate, oxalate, and nitrite salts of sodium, potassium, lithium, magnesium, calcium, and iron.

Several inorganic chemicals used in recovery operations are identified in 40 CFR Part 261 or in Appendix VIII of that regulation as having hazardous characteristics. Table 8 lists these chemicals, their HWN, P/S codes in which they are used, and the applicability of the HWNs to the use of these chemicals in recovery operations.

Organic chemicals. The following organic chemicals used in the recovery operations are not identified as having hazardous characteristics in 40 CFR Part 261, including Appendix VIII in that regulation: 1-propanol, 3-in-1 household oil, alkylating agents (unspecified), bromobenzene, bromocresol purple, carbon tetrafluoride, Citrapeel, DBBP (dibutyl butyl-phosphonate), DBBP (dibutyl butyl-phosphonate)/Isopar (isoparaffinic hydrocarbon solvent), diethyl oxalate, dihexyl n,n-diethylcarbamoylmethyl phosphonate (DHDCMP), di-isopropyl benzene, Dow Corning 2000 Oil, Dowanol 80 (long-chain alcohol), ethanol, ethylene glycol, Fantastic, formamide, Fomblin brand

Table 8. Use of RCRA-Regulated Metals and Inorganic Chemicals in TA-55 Operations

Inorganic Chemicals, Metals and P/S Codes in Which They Were Used	Comments on Applicability of RCRA Codes
Alkaline earth metals (P/S AC, AC1, AC2, and OR)	D003 does not apply because these potentially pyrophoric metals are consumed or oxidized before discarding.
Arsenic (P/S PE between 1984 and 1985)	D004 is applicable to P/S code PE during this period.
Barium (various)	D005 is applicable because barium is an impurity in ash feed material, and a suspect impurity in molten salt extraction and pyrochemical salts.
Cadmium (anode heels produced in P/S ER, PX, and SS)	D006 applies to a limited number of anode heels produced using cadmium as a solvent.
Chromium (various)	D007 is applicable because chromium is an impurity in analytical laboratory solutions, anode heels, hydroxide cakes, ash, and plutonium oxides; leached by strong acid from stainless steel in the evaporators; introduced as potassium dichromate (endpoint indicator) and sodium chromate (used in the separation of plutonium and thorium)
Hydrogen peroxide (various)	D001 (ignitability—oxidizer) and D003 (reactivity) do not apply to the use of hydrogen peroxide because there are no free liquids in the TRU solid waste.
Lead (P/S DOP, ER, KBTF, PX, and SS)	For combustible waste, EPA HWN D008 is applicable to P/S codes DOP, KBTF, and PX. For P/S codes ER and SS, D008 is only applicable to the metal waste (TWCP-5167).
Lead hydroxide, oxide, or nitrate (P/S AD)	D008 (lead) applies to P/S code AD.
Magnesium perchlorate (P/S FF)	D001 (oxidizer) does not apply to the use of this chemical in P/S code FF because it was sent to cement fixation (TWCP-5158).
Mercuric nitrate (P/S VP1 and VP3)	D009 (mercury) applies to P/S codes VP1 and VP3. Mercuric nitrate is used as a catalyst in P/S code VP1; the hydroxide cake produced in VP1 is processed in P/S code VP3.
Mercury (P/S SS, MD)	D009 applies to P/S code SSMD for about one week in the summer of 1994.
Nickel powder (P/S CO)	No HWN applies to nickel.
Potassium dichromate (P/S AD, CS, CSE, DO, and SE)	D007 (chromium) applies to P/S codes AD, CS, CSE, DO, and SE because of the use of potassium dichromate as a titration endpoint indicator until end of 1993. The solution and precipitates were processed by hydroxide precipitation under the same codes. The chromium was incorporated as a contaminant in the hydroxide cakes.
Selenium (various)	D010 applies because selenium is an impurity found in ash (P/S codes IS, SB, and TDC) and in materials processed from other DOE sites.

Table 8. Use of RCRA-Regulated Metals and Inorganic Chemicals in TA-55 Operations (continued)

Inorganic Chemicals, Metals and P/S Codes in Which They Were Used	Comments on Applicability of RCRA Codes
Silver, silver nitrate and other silver salts (P/S AC1, CPOD, CS, CSE, DO, SE)	D011 (silver) applies to P/S codes CW and CX due to the use of silver nitrate for chloride titrations under P/S codes CS, CSE and SE until 1993. The solution and precipitates were processed by hydroxide precipitation under P/S codes CW and CX. Silver was incorporated as a contaminant in the hydroxide cakes. D011 (silver) applies to P/S code CPOD due to the use of silver nitrate as a catalyst from 1990 to 1994. D011 (silver) applies to P/S code AC1 due to the use of silver salts.
Sodium (P/S EL)	D003 does not apply in this case because excess sodium is dissolved in Dowanol 80 to form a stable sodium salt.
Sodium chromate (P/S PT)	D007 (chromium) applies to P/S code PT due to the use of sodium chromate in the separation of thorium from plutonium and americium.
Stainless steel (contains chromium, P/S WE)	D007 does not apply in this case, as there is no potential to leach chromium because stainless steel is not exposed to strong acids in P/S code WE.
Tin-lead solder (sensors in P/S BT)	D008 is only applicable to the metal waste from this P/S code, and not to the combustible waste.
Uranium nitride, depleted (P/S FF)	D003 (reactivity) does not apply to the use of uranium nitride in P/S code FF. Although this chemical is pyrophoric, its disposal in an oxidizing environment eliminates this characteristic because it is converted to uranium oxide. Uranium nitride is oxidized in the passivation furnace (P/S code PA) prior to discard.

pump oil, GoJo cleaner (kerosene derivative), hexane, hydrazine dihydrochloride, hydrazine hydrochloride, ion exchange resin, isopropanol, kerosene, Metalprep 79 (phosphoric acid-based metal cleaner), MolyKote, n-dodecane, Nuetracleaner #1, Nuetracleaner #2, octylphenyl di-isobutyl carbamoylmethyl phosphine oxide (CMPO), oil (engine), organic liquid emulsifier, Organicstrip, perchlorocarbons (unspecified), phenolphthalein, phosphate buffer solution, phosphine oxide compounds, phthalate buffer solution, polyethylene glycol, polyoxyethylene-20-sorbitan laurate (surfactant), SF-2I (as coolant), silicon adhesive, silicon defoamer, sugar, surfactants, tetraethylamine hydrochloride, tetraethylamine hydroxide, tetraethylammonium hydroxide, Texaco Regal 32 oil (cutting oil), thionyl chloride, tributyl phosphate (TBP), tributyl phosphate (TBP)/Isopar (isoparaffinic hydrocarbon solvent), tributyl phosphate and iodine in kerosene, trioctylphosphine oxide (TOPO), urea, Vactra oil, vacuum grease, vacuum pump oil, WD-40, and Windex.

Several organic chemicals used in recovery operations are identified in 40 CFR Part 261 or in Appendix VIII of that regulation as having hazardous characteristics. Table 9 lists these chemicals, their HWNs, P/S codes in which they are used, and the applicability of the HWNs to the use of these chemicals in recovery operations.

D001 (ignitability) and D003 (reactivity) do not apply to wastes in waste stream TA-55-30 despite the use of spent non-halogenated solvents (HWN F003) for the following reasons:

- Solutions containing spent non-halogenated solvents are sent to the RLWTF if they are below the DL for plutonium.
- Solutions containing spent solvents and above the DL for plutonium are further treated by aqueous recovery activities as part of routine chloride and nitrate operations. Aqueous recovery involves dissolving any solid plutonium in hydrochloric or nitric acid, followed by ion exchange to extract the plutonium.
- The processed solutions are below the DL for plutonium and are either sent to the RLWTF or to the evaporator for volume reduction. Evaporator bottoms are fixed in cement, a waste form for which ignitability is not a concern.
- Rags, if contaminated with spent solvents and above the DL for plutonium, are thermally decomposed, which destroys any organic component.

Table 9. Use of RCRA-Regulated Organic Chemicals in TA-55 Operations

Organic Chemical and P/S Codes in Which It Was Used	Comments on Applicability of RCRA Codes
Acetone (P/S codes FF, ME, and MOX)	• F003 applies to all debris waste generated by P/S code ME. Metal and glass are non-porous and do not absorb liquids, and any metal or glass in contact with this chemical would have been air-dried before being discarded as waste. However, these waste streams also contain a small percentage of combustible waste that could be contaminated with this organic chemical. • F003 does not apply to P/S code FF or MOX because it was only used outside the glovebox.
Acetonitrile (P/S code AC2)	• U003 does not apply due to the manner in which this chemical is used in P/S code AC2 (Appendix VIII chemical).
Benzene (P/S codes AC, AC1, AC2, and SA)	• D018 (benzene) applies to P/S codes AC, AC1, AC2, and SA, in which it was used as a solvent. • F005 applies to all debris waste generated by P/S codes AC, AC1, AC2, and SA. Metal and glass are non-porous and do not absorb liquids, and any metal or glass in contact with this chemical would have been air-dried before being discarded as waste. However, these waste streams also contain a small percentage of combustible waste, which could be contaminated with this organic chemical.
Butanol (P/S codes CLS, CW, APD, ACL, ICP, CF, and HP)	• F003 does apply to all debris waste generated by P/S codes CLS, CW, APD, ACL, ICP, CF, and HP.
Carbon tetrachloride (P/S codes AD, CV, PTP, and PX)	• D019 (carbon tetrachloride) applies to P/S codes AD, CV, PTP and PX. This chemical was used in PTP between 1/87 and 6/89. • F002 does not apply to P/S codes AD, CV, PTP, or PX because it was not used as a solvent or for degreasing.
Chlorobenzene (P/S codes CLS, CW, APD, ACL, ICP, CF, and HP)	• F002 does apply to all debris waste generated by P/S codes CLS, CW, APD, ACL, ICP, CF, and HP.
Chloroform (P/S codes AC, AC1, AC2, APD, FF, and XO)	• D022 (chloroform) applies to P/S codes AC, AC1, AC2, APD, FF and XO.
Ethyl ether (P/S code SA)	• F003 applies to all debris waste generated by P/S code SA. Metal and glass are non-porous and do not absorb liquids, and any metal or glass in contact with this chemical would have been air-dried before being discarded as waste. However, these waste streams also contain a small percentage of combustible waste that could be contaminated with this organic chemical.
Freon and Freon TF (P/S codes CA, DA, MA, MW, PD, PF, SCB, SRL, UA, VD, WE and XO)	See entry for 1,1,2-trichloro 1,2,2-trifluoroethane.

Table 9. Use of RCRA-Regulated Organic Chemicals in TA-55 Operations (continued)

Organic Chemical and P/S Codes in Which It Was Used	Comments on Applicability of RCRA Codes
Methanol (P/S codes AD and SO)	• F003 applies to all debris waste generated by P/S code AD, in which methanol may have been used for cleaning inside the glovebox. Metal and glass are non-porous and do not absorb liquids, and any metal or glass in contact with this chemical would have been air-dried before being discarded as waste. However, these waste streams also contain a small percentage of combustible waste that could be contaminated with this organic chemical. • F003 does not apply to P/S code SO because it was used in a cold trap outside the glovebox.
Methylene chloride (P/S code AC1)	• F002 applies to all debris waste generated by P/S code AC1. Metal and glass are non-porous and do not absorb liquids, and any metal or glass in contact with this chemical would have been air-dried before being discarded as waste. However, these waste streams also contain a small percentage of combustible waste that could be contaminated with this organic chemical.
Methyl ethyl ketone (P/S codes MA and XO)	• D035 (methyl ethyl ketone) applies to P/S codes MA and XO. • F005 applies to all debris waste generated by P/S codes MA and XO, in which this chemical was used as a solvent. Metal and glass are non-porous and do not absorb liquids, and any metal or glass in contact with this chemical would have been air-dried before being discarded as waste. However, these waste streams also contain a small percentage of combustible waste that could be contaminated with this organic chemical.
Pyridine (P/S codes AC and SA)	• D038 (pyridine) applies to P/S codes AC, AC2 and SA. • F005 applies to all debris waste generated by P/S codes AC, AC2, and SA, in which this chemical was used as a solvent. Metal and glass are non-porous and do not absorb liquids, and any metal or glass in contact with this chemical would have been air-dried before being discarded as waste. However, these waste streams also contain a small percentage of combustible waste that could be contaminated with this organic chemical.
Tap Magic (P/S code MA)	See entry for 1,1,1 trichloroethane.
Tetrachloroethane (not used)	• No RCRA codes apply to tetrachloroethane, an Appendix VIII chemical. Although it is listed on the chemical inventory for metal operations, it was never used in glovebox operations.

Table 9. Use of RCRA-Regulated Organic Chemicals in TA-55 Operations (continued)

Organic Chemical and P/S Codes in Which It Was Used	Comments on Applicability of RCRA Codes
Tetrachloroethylene (P/S codes AD, APD, CSE, CV and SE)	• D039 (tetrachloroethylene) applies to P/S codes AD, APD, CSE and SE in which it was used until 1992. • D039 does not apply to P/S code CV because it was used as a coolant outside the glovebox. • F002 applies to all debris waste generated by P/S codes AD, APD, CSE and SE, in which this chemical was used as a solvent. Metal and glass are non-porous and do not absorb liquids, and any metal or glass in contact with this chemical would have been air-dried before being discarded as waste. However, these waste streams also contain a small percentage of combustible waste which could be contaminated with this organic chemical. Its use as a solvent in P/S code CSE and SE ended in 1992. • F002 does not apply to P/S code CV because it was only used as a coolant outside the glovebox.
Tetrahydrofuran (P/S codes AC, AC2, and SA)	• U213 is not applicable to the use of this chemical because there is no evidence of a spill or of spill residues entering TA-55 TRU waste streams.
Toluene (P/S codes AC, AC2 and SA)	• F005 applies to all debris waste generated by P/S codes AC, AC2 and SA, in which this chemical was used as a solvent. Metal and glass are non-porous and do not absorb liquids, and any metal or glass in contact with this chemical would have been air-dried before being discarded as waste. However, these waste streams also contain a small percentage of combustible waste that could be contaminated with this organic chemical.
1,1,1 trichloroethane (ingredient in Tap Magic) (P/S code MA)	• F002 applies to P/S code MA because Tap Magic may have been used as a metal cutting fluid, coolant, or as a solvent. Its use was discontinued in 1992. See the discrepancy documentation on this in Attachment 8.
Trichloroethylene (P/S codes CK, EL, FF, MA, ME, and XO)	• D040 (trichloroethylene) applies to P/S codes EL, FF, MA, ME, and XO. • D040 does not apply to P/S code CK because this chemical was used as a coolant outside the glovebox. • F001 applies to all debris waste generated by P/S code MA, in which this chemical was used as a degreaser during final cleaning of metal parts from 1979 to 1992 (resuming again in February 2000). Metal and glass are non-porous and do not absorb liquids, and any metal or glass in contact with this chemical would have been air-dried before being discarded as waste. However, these waste streams also contain a small percentage of combustible waste that could be contaminated with this organic chemical. • F002 does not apply to P/S codes EL or FF, where it was used as a lubricant for a cutting saw, not as a solvent.

Table 9. Use of RCRA-Regulated Organic Chemicals in TA-55 Operations (continued)

Organic Chemical and P/S Codes in Which It Was Used	Comments on Applicability of RCRA Codes
1,1,2-trichloro 1,2,2-trifluoroethane (ingredient in Freon and Freon TF) (P/S codes CA, DA, MA, MW, PD, PF, SCB, SRL, UA, VD, WE and XO)	• F002 applies to all debris waste generated by P/S codes DA, MA, WM, and XO. Metal and glass are non-porous and do not absorb liquids, and any metal or glass in contact with this chemical would have been air-dried before being discarded as waste. However, these waste streams also contain a small percentage of combustible waste that could be contaminated with this organic chemical. • F002 does not apply to P/S codes CA, MW, PD, SCB, SRL, UA, VD and WE. Although Freon TF is used as a solvent to clean metal parts, the parts are routinely air-dried to avoid the need for cellulosic wipes. • F002 does not apply to P/S code PF, where Freon was used as a coolant for a cutting saw, not as a solvent.
Xylene (P/S codes CLS, CW, APD, ACL, ICP, CF, and HP)	• F003 does apply to all debris waste generated by P/S codes CLS, CW, APD, ACL, ICP, CF, and HP.

- Although contaminated rags that are below the DL for plutonium are discarded as combustible debris, headspace gas analyses support the expectation that the solvents are below the limits established by the WIPP WAC. In addition, 100 percent of the waste containers are subjected to headspace gas analysis. Any container with a total concentration of potentially flammable volatile organic compounds (VOCs) above the limit set by the WIPP WAC is prohibited from being shipped to the WIPP.

4.0 RADIONUCLIDE CONTENT OF THE WASTE STREAMS

4.1 Pu-238, Pu-239, Pu-240, Pu-241, and Pu-242

The primary Pu material type inputs for the plutonium recovery process are listed in Table 10. The designation *material type* is used to describe the isotopic composition of common blends of radioactive materials used within the DOE complex. The primary material type that feed into the plutonium recovery process is weapons grade plutonium (MT 52). However, the other material types are occasionally introduced as feed material.

Recovery operations are not expected to alter the Pu isotopic ratios of the feed material. The material type used in the operation generating each waste item is documented on generator records; however, in many cases, items of different material types are packaged into the same waste drum, so that a variety of Pu isotopic ratios may be detected by radioassay. In addition, cross-contamination of equipment with different material types can lead to variable material types detected by radioassay, particularly in the thermal decomposition unit (P/S code TDC).

Pu-242 cannot be measured by gamma spectroscopy, so its abundance is calculated based on empirical isotopic correlations for other waste containers with small fractions of Pu-242, such as weapons grade plutonium bearing waste. In some cases, Pu-242 is estimated using an iterative procedure based on active and passive neutron data from a single waste container if the plutonium isotopic ratios are known for the other plutonium isotopes. This second method is used when the result from the correlation is suspect for waste containers with high levels of enriched Pu-242. The Pu-242 in these latter containers may also be derived from process knowledge if necessary.

4.2 U-233, U-234, U-235, and U-238

U-233 and U-238 are not normally components of the Pu-239 material types handled at TA-55. U-235 would be present from the decay of Pu-239 only at 0.1% by weight of the total Pu content. However, all three isotopes have been introduced as special material. Generator assays and AK information on the amounts present are not available. Project 2010 assay personnel analyze for and

Table 10. Average Isotopic Content of Plutonium Material Types and Enrichments

Material Type (MT)	Plutonium Isotope (Wt. %) and Half-Life						Upper Bounds for Dimensionless Weight Ratios[a]		
	Pu-238 (87.74 yr)	Pu-239 (24120 yr)	Pu-240 (6564 yr)	Pu-241 (14.35 yr)	Pu-242 (376,300 yr)	Pu-244 (8.26 x 10^7 yr)	U-234/ Total Pu	U-235/ Total Pu	Am-241/ Total Pu
MT 51	0.006	96.77	3.13	0.076	0.018	—	1×10^{-5}	0.001	0.0006
MT 52	0.01	93.78	6	0.2	0.02	—	2×10^{-5}	0.001	0.002
MT 53	0.03	91.08	8.45	0.366	0.071	—	7×10^{-5}	0.0009	0.003
MT 54	0.046	87.42	11.5	0.81	0.22	—	0.0001	0.0009	0.007
MT 55	0.06	83.88	14.73	1.03	0.304	—	0.0002	0.0009	0.009
MT 56	0.061	81.9	16.51	1.18	0.355	—	0.0002	0.0009	0.01
MT 57	0.433	74.63	20.7	2.55	1.69	—	0.001	0.0008	0.02
MT 42									
84%	1.02	1.37	10.32	3.13	84.14	0.02	0.003	1×10^{-5}	0.03
90%	0.72	1.26	6.4	1.86	89.77	—	0.002	1×10^{-5}	0.02
95%	0.45	0.56	2.47	0.906	95.58	0.029	0.001	6×10^{-6}	0.008
MT 83									
83%	83.89	13.8	1.9	0.32	0.09	—	0.26	0.0002	0.003
89%	89.26	10.07	0.633	0.021	0.015	—	0.28	0.0001	0.0002

[a] These ratios are calculated under the assumption that no chemical fractionation occurs and, hence, are intended to be used to identify fractionation when it is present by comparing these upper bounds to radioassay data.

Sources: TWCP-698, TWCP-8003

report U-233, U-235, and U-238 since they are introduced into the plutonium recovery process stream.

In general, uranium and its isotopes are expected to be present only at trace levels, if at all, if the feed material did not purposely contain uranium. However, some reactor fuel development and pit disassembly activities have uranium material as the feed material. The primary uranium material type inputs are listed in Table 11.

Table 11. Average Isotopic Content of Uranium Material Types and Enrichments (Wt. %)

Material Type	U-234	U-235	U-236	U-238
MT 12	0.0015	0.23	0.008	99.77
MT 35	0.36	37.6	0.14	61.9
MT 36	0.63	62.44	0.18	36.75
MT 38	1.03	93.04	0.41	5.53
MT 39	1.32	97.52	0.17	0.99

Sources: TWCP-698, TWCP-8003

U-234 content must be estimated since this isotope cannot be reliably measured using NDA techniques (TWCP-9810). The material type provides the basis for estimating an upper bound for U-234 based on the rate of decay of the precursor, Pu-238, and the assumption that there is no other source of uranium in the waste material. The standard uranium material types provide an estimate of the ratio of U-234 to U-235 for the material likely to be input to recovery operations. The content of U-234 in the Pu-239 material types is calculated as the sum of the contributions expected from decay of Pu-238 and from uranium input to the operation, with the value of 0.014 conservatively used for the ratio of abundances of U-234 to U-235 in typical uranium material types.

4.3 Am-241

AK on the material type inputs provides the basis for estimating an upper bound for Am-241 content based on the rate of decay of the precursor, Pu-241. The purpose of such bounding calculations is to provide a basis for identifying significant enrichment or depletion of Am-241 based on radioassay results for individual waste containers. The calculations assume that (a) none of these isotopes were initially present in the material, (b) the oldest Pu material in inventory dates back to 1 January 1960, and (c) the legacy waste was packaged on 1 January 1996, making it 36 years old at that time (TWCP-698). In general, wastes from the plutonium recovery process are enriched in Am-241, because a

primary intent of the recovery process is to reduce the americium content of the retained plutonium.

No correlation is expected among the different radioelements, Pu, Np, U, Pa or Am. The differences in valence states and chemical affinities among these elements are expected to result in substantial fractionation during several recovery operations, including ion exchange, solvent extraction, hydroxide precipitation, and dissolution.

4.4 Other Radionuclides Present Due to Decay

Other radionuclides will be present in most of the wastes from the decay of a Pu isotopic precursor or as a contaminant in the feed material:

- Np-237, the decay product of Am-241 (half-life, 458 yr), is expected to be present in minor amounts in most waste from recovery operations.
- Am-243, the decay product of Pu-243 (half-life, 5.0 hr), is expected to be present in minor amounts in most wastes from recovery operations. Pu-243 is produced by neutron capture on Pu-242 during fuel irradiation.
- Protactinium (Pa)-231, the decay-chain daughter of U-235, is expected to be present in trace amounts in some wastes due to its widespread presence as a contaminant in recovery operations (TWCP-5164, TWCP-5165).
- Actinium (Ac)-227, the decay-chain daughter of Pa-231, is expected to be present in trace amounts where Pa-231 is present, but at several orders of magnitude less than Pa-231.

4.5 Cs-137 and Sr-90

4.5.1 Cs-137

Cs-137 is a product of the spontaneous fission of Pu-238, Pu-239, and especially Pu-240. Cs-137 is also a trace contaminant in purified plutonium from the production reactors (TWCP-5164, TWCP-5165). In the latter case the remaining Cs could be on the order of 0.5 ng/g Pu. In the former instance the formation of Cs-137 due to spontaneous fission would lead to about 0.4 pg/g Pu in plutonium that is 10 years old. Because Cs-137 due to spontaneous fission is about a factor of a thousand less than that due to residual contamination from the original separation on the production fuel, the latter is the dominant source of Cs in waste.

4.5.2 Sr-90

Based on interviews of SME, no spent nuclear fuel or other material containing Sr-90 were introduced into the TRU waste streams (TWCP-

882). No references or procedures related to spent fuel processing were located in the AK investigation of records. No generator documents (WODF, DWSR, TWSR, Waste Profile Form [WPF]) identified spent fuel or Sr-90 as inputs or as present in the waste.

During review of WPFs and database records from the waste storage facility (TA-54), use of material containing Sr-90 was identified in 771 drums of waste originating from TA-03 and TA-21. WPFs indicate processing of fuel pins in metallography operations and of samples of Hanford Tank waste in chemistry experiments. These operations and wastes are segregated by facility of origin, and the wastes are not commingled with wastes from LANL. Like Cs-137, Sr-90 is a high yield fission product and is unlikely to be present except as a trace remnant from Pu production/processing. Unlike Cs-137, however, Sr-90 (together with its Y-90 daughter) emits no significant gamma radiation that would allow it to be quantified by direct gamma counting. Therefore, no reliable means exists for the direct NDA of Sr-90. However, because of the requirement that an estimate of Sr-90 content be made, the following approach is taken at LANL.

In Pu production runs, Cs-137 and Sr-90 are produced at approximately the same atom level. These two nuclides have very similar half-lives (~ 30 y) and will therefore be present at roughly the same activity level prior to commencement of any processing operations. If it is assumed that Sr and Cs are not fractionated from one another during chemical processing, Cs-137 may be used as a marker for Sr-90 activity ratio of 1:1, yielding an estimated value for Sr-90. While this cannot be considered a valid assay method, LANL has adopted it as an "operationally defined" means for estimating the Sr-90 content in waste streams.

The assumption that Cs and Sr track one another in operations associated with Pu recovery/processing deserves further elaboration because this is a fundamental tenet of the above method used for the estimation of Sr-90. SMEs have evaluated the fractionation of Cs from Sr in the major operations (i.e., aqueous ion exchange, oxalate/hydroxide precipitation, and pyrochemical processing).

In both nitrate and chloride ion exchange work, the Cs and Sr pass unretained through the columns and are therefore not fractionated. Neither element will precipitate as an oxalate or hydroxide at the concentrations present in process solutions; both remain together in the solution phase. Finally, both elements remain associated with the molton salt phase in a pyrochemical extraction and reduction. Any reduction of Sr by calcium metal (Ca^0) in the DOR process will behave like residual Ca^0 and remain in the salt (i.e., not with metallic Pu). The formal reduction potential of the Cs/Cs^+ to be reduced is significantly more

negative than the reduction potential of the Ca/Ca^{++} couple and therefore, the Cs will largely remain in the salt phase as Cs^{+}. Sr and Cs should therefore remain associated with one another throughout processing operations.

Following its production in a reactor, Pu is purified using an extraction-based process (e.g., PUREX) prior to being shipped to other facilities such as Los Alamos. This initial chemistry is particularly effective at removing Cs and Sr (WHC-CM-5-25 "Purex Technical Manual" 8/25/88). Although the exact Sr/Cs ratio is difficult to ascertain, Cs-137 and Sr-90 are both estimated to be at weight fractions around 10^{-9} in Pu received into LANL.

From the above discussions LANL assumes that Cs-137 and Sr-90 are each present at about 10^{-7} % in freshly isolated Pu, and that they are not fractionated from one another in chemical operations performed at LANL. This supports the conclusion that Sr-90 may be estimated, albeit crudely, from the direct measurement of Cs-137.

4.6 Other Radionuclides Introduced as Feed Material

Secondary radionuclides are also present in the waste due to operations involving feed materials other than Pu (TWCP-698). Additional radionuclides expected to be present in each operation were listed by a panel of experts from LANL. The resulting list is documented in a memorandum linking the radionuclides to P/S codes (TWCP-882, amended by TWCP-5166). The list (see Table 12) includes Am-241, Am-243, cerium (Ce)-144, curium (Cm)-244, Np-237, Pa-231, Pu-238, Th-230, Th-232, U-233, U-235, and U-238.

The possible presence of Cm-244 in TRU waste is of particular interest to radioassay operations because it can affect the choice of a radioassay instrument to use for optimal results. Cm-244 was introduced in recovery operations in P/S code DOP, which started in 1988 (TWCP-5165). Material outputs from this operation sometimes are sent to P/S codes IS or WE. Cm-244 could also be part of waste under P/S code CA because both operations take place in the 300 Wing of PF-4. Because only one room in this area is available for bagouts, TRU waste from P/S codes DOP and CA are sometimes combined. In addition, because rags from DOP are sent to IS, Cm-244 could be present in the ash produced by this operation, which is then processed through nitrate aqueous recovery operations. Some unknown fraction of the Cm-244 could ultimately end up in the evaporator bottoms, which is then immobilized in cement in P/S code CF. In any case, however, Cm-244 is not expected to be present in any waste generated before 1988.

Table 12. Secondary Radionuclides in Plutonium Recovery TRU Waste

Secondary Radionuclide	P/S Code Generating Waste
Actinium-227	AD, ARI, BC, CV, FF, HGMS, LIBS, PF, SRL, WM, XO.
Americium-241	AO, AP, CA, CD, CF, CLX, CXL, DOP, EV, FA, HCD, HD, HP, IA, LR, MA, OH, PI, PR, PRR, PS, SS, SX, WE, XP; plus trace amounts expected in TRU waste generated by nearly all P/S codes, due to ingrowth from Pu-241 decay. Waste could be either depleted or enriched in Am depending upon whether the source of contamination is the product or the residues.
Americium-243	BC, CA, DOP, JA, MA, PH, PI, SS, WE.
Cerium-144	DOP, WE.
Curium-244	DOP, IS (Mar-Apr 1987), WE.
Neptunium-237	ATL, BC, CA, CF, DOP, ED, EV, IS, JA, MA, Neptunium, PI, RB, RFX, WE; plus trace amounts expected in TRU waste generated by nearly all P/S codes, due to ingrowth from Am-241 decay.
Protactinium-231	BC (1989), JA (1989), WE.
Plutonium-238	AAP, TDC, TSC
Plutonium-241	EV, IS, TDC, TSC
Thorium-232	CF, DOP, PT, WE.
Thorium-232 enriched with Thorium-230	BC, JA, WE.
Uranium-233	DOP, WE.
Uranium-235 or enriched uranium	CN, FF, GI, MW, OB, PD, PI, RS, SRL, UA; and P/S codes in nitrate operations (AL, AO, AP, AS, AT, ATL, BAC, BF, BL, BM, BU, CC, CD, CF, CH, COD, COL, CPOD, CR, DF, DP, DS, ED, ETD, EV, FA, FC, FX, GMS, HC, HCD, HD, HGMS, HP, HRA, IA, IS, LC, LG1, LG2, LR, MAG, MAS, MB, MELL, MF, ML, MPD, NC, NL, NR, OD, OH, OY, PA, PAF, PR, PS, PT, PTS, RB, RBJ, RC, RCM, RFX, RO, RR, SC, SP, SSD, SX, TDC, TSC, UPS, US, US2, VC, VP1, VP2, VP3, VUL, ZD).
Uranium-238 or depleted uranium	BC, CN, FF, GI, JA, LC, MW, OB, PD, RC, RS, SRL, UA, UPS, US, WE, and P/S codes in nitrate operations (AL, AO, AP, AS, AT, ATL, BAC, BF, BL, BM, BU, CC, CD, CF, CH, COD, COL, CPOD, CR, DF, DP, DS, ED, ETD, EV, FA, FC, FX, GMS, HC, HCD, HD, HGMS, HP, HRA, IA, IS, LC, LG1, LG2, LR, MAG, MAS, MB, MELL, MF, ML, MPD, NC, NL, NR, OD, OH, OY, PA, PAF, PR, PS, PT, PTS, RB, RBJ, RC, RCM, RFX, RO, RR, SC, SP, SSD, SX, TDC, TSC, UPS, US, US2, VC, VP1, VP2, VP3, VUL, ZD).

Sources: TWCP-882, TWCP-5166, TWCP-9499, TWCP-AK-2.1-003, TWCP-AK-2.1-005.

During Project 2010 characterization, the contents of each waste package undergo non-destructive analysis to provide detailed radioisotopic data. These data are used to evaluate the accuracy of AK information in accordance with *Waste Characterization Data Reconciliation with Acceptable Knowledge and Acceptable Knowledge Accuracy Reporting* (TWCP-DTP-1.2-064).

5.0 CORRELATIONS BETWEEN WASTE STREAMS

All of the debris waste streams covered by this AK Report were generated by the same plutonium recovery activities at LANL but differ in physical form, waste matrix code, and hazardous constituents. In addition to these waste streams in which Pu-239 is the dominant Pu isotope, analogous waste streams containing Pu-238 as the dominant Pu isotope were generated during the same time period at the plutonium facility. Homogeneous waste streams were also generated from the Pu-239 recovery process; they are described in a separate report.

Waste containers in a waste stream are characterized as a campaign, in which the targeted group of waste containers to be characterized are selected based on criteria such as availability of the waste containers, waste loading level, availability of waste generator records, and hazardous waste numbers. Waste stream lots selected for convenience of characterization activities are defined in the applicable WSPF.

6.0 ASSIGNMENT OF WASTE MATRIX CODES

Waste matrix codes are assigned to waste streams based on waste physical form and content and AK reports in accordance with *Assignment of Waste Matrix Codes* (TWCP-DTP-1.2-053). Additional codes apply to these waste streams, based on code descriptions in the *WIPP Transuranic Waste Baseline Inventory Report* (WTWBIR) (CAO-94-1005), the *Transuranic Package Transporter (TRUPACT)-II Content Codes* (DOE/WIPP-89-004/Rev.13.5), Radioactive Solid Waste Disposal (RSWD) code, and Item Description Code (IDC) (Table 13). RSWD and IDC codes assigned to individual containers by the waste generator are summarized by waste stream in the AKIS.

7.0 ASSIGNMENT OF WASTE MATERIAL PARAMETER CODES

The waste material parameter codes are qualitatively assigned to the waste streams based on AK information and knowledge of waste generation practices described in the Waste Management Procedures (see Section 3.2). These waste material parameter (WMP) codes are confirmed for legacy waste by comparing them against WIPP-compliant waste characterization data from real-time radiography and for newly generated waste by comparing them against WIPP-compliant waste characterization data from visual examination techniques.

Table 13. Assignment of Waste Codes to Waste Streams Containing Pu-239

Waste Stream	Mixed or Non-Mixed Status	Waste Stream Name	WMC	WTWBIR Code	TRUCON Code*	RSWD Code*	IDC*
TA-55-19	Mixed	Combustible debris waste	S5300	LA-W004	LA116 LA154	A14, A15, A16, A17, A18, A55, A60	004
LA-NCD01	Non-Mixed	Combustible debris waste	S5300	LA-T004	LA116 LA154	A14, A15, A16, A17, A18, A55, A60	004
TA-55-30	Mixed	Heterogeneous debris waste	S5400	LA-W005	LA116 LA117 LA118 LA123 LA125 LA154	A18, A19, A25, A27, A28, A30, A47, A50, A51, A52, A60, A61, A95	001 005
LA-NHD01	Non-Mixed	Heterogeneous debris waste	S5400	LA-T005	LA116 LA117 LA118 LA123 LA125 LA154	A18, A19, A25, A27, A28, A30, A47, A50, A51, A52, A60, A61, A95	001 005

NOTES: *These codes are defined in the AKIS. For the majority of legacy waste containers, traceable AK documentation has not been obtained that shows what codes, if any, were assigned by the waste generator. In many cases, the code listed may apply to only one out of thousands of containers in the waste stream.

- Sources: TA-55 TWID, R3, Appendix G; NMT7-WI2-SOP-TA55-013,R4, Appendix D; AKIS, Attachment 6.
- WTWBIR numbers have been assigned to waste streams covered by this AK Report based upon the identifier from CAO-94-1005 that is considered to provide the closest match to the waste stream characteristics, based on the table sources listed above.

8.0 ASSIGNMENT OF EPA HAZARDOUS WASTE NUMBERS

8.1 F, K, and P Listings

F001, F002, F003 and F005 apply to combustible and non-combustible waste generated by several of the P/S codes covered by this report. In many cases, the applicability of the HWN is limited to waste generated during a specific period, as discussed in the appropriate AK report. All four F codes are conservatively applied to wastes with unknown P/S codes.

The applicability of F-listings to a specific waste stream is determined by the contents of the waste containers and the associated P/S codes (see Table 14). If any F-listing is applicable to combustible debris from a particular P/S code, then it is also assumed to be applicable to non-combustible debris from the same P/S code. Metal and glass are generally non-porous and do not absorb liquids, and any metal or glass in contact with volatile organic chemicals would have been air-dried before being discarded as waste. However, noncombustible waste streams also contain a small percentage of combustible waste that could be contaminated with organic chemicals.

At one time a P120 code was applied to certain drums generated in 1998 because of the temporary use of vanadium pentoxide for about 6 months in that year. Based upon investigation into the way the material was handled, this code is no longer needed. A P120 assignment would be used only if waste resulted from spillage of this material or from disposal of un-reacted/unspent material. No un-reacted/unspent material was disposed of in TRU waste drums. In addition, no significant spill of this material occurred. If a spill had occurred, suitable records would exist (e.g., incident reports, waste profile forms). The absence of such documentation, coupled with information obtained through interviews of people who worked with the material, indicate that a P120 assignment is not necessary (TWCP-12081).

8.2 Toxicity Listings

Due to the lack of P/S code information for legacy waste, all mixed waste streams containing Pu-239 as the dominant Pu isotope are conservatively assigned the D-listings of D004, D005, D006, D007, D008, D009, D010, D011, D018, D019, D021, D022, D035, D038, D039, and D040.

Based on information summarized in the AK reports, waste generated by several P/S codes are conservatively assigned EPA HWNs due to the potential presence of D-listed constituents. In many cases, the applicability of the HWN is limited to waste generated during a specific period of time, as discussed in the appropriate operations AK report. If a D-listed constituent is known to be present in the waste at some level, the D-code is conservatively assigned unless analytical data confirm that its concentration is below the regulatory level. The decision to assign

Table 14. F-Listings Applicable to Specific P/S Codes

P/S Code	Applicable F-Listing	Chemical Responsible for Listing
AAP	F001	tichloroethylene
AC, AC1, AC2	F002, F005	benzene, methylene chloride, pyridine, toluene
AD	F002, F003	methanol, tetrachloroethylene
APD	F002, F003	acetone, butanol, chlorobenzene, methanol, methylene chloride, tetrachloroethylene, xylene
CF	F002, F003	acetone, butanol, chlorobenzene, methanol, methylene chloride, tetrachloroethylene, xylene
CLS	F002, F003	acetone, butanol, chlorobenzene, methanol, methylene chloride, tetrachloroethylene, xylene
CSE	F002	Tetrachloroethylene
CW	F002, F003	acetone, butanol, chlorobenzene, methanol, methylene chloride, tetrachloroethylene, xylene
DA	F002	1,1,2-trichloro 1,2,2-trifluoroethane (Freon ingredient)
HP	F002, F003	acetone, butanol, chlorobenzene, methanol, methylene chloride, tetrachloroethylene, xylene
MA	F001, F002, F005	1,1,2-trichloro 1,2,2-trifluoroethane (Freon ingredient), methyl ethyl ketone, trichloroethylene
ME	F003	acetone
SA	F002, F003, F005	benzene, diethyl ether, pyridine, toluene
SE	F002	tetrachloroethylene
WM (No F-listings apply after 1993)	F001, F002, F005	1,1,2-trichloro 1,2,2-trifluoroethane (Freon ingredient), methylene chloride, methyl ethyl ketone, trichloroethylene
X0, XO	F001, F002, F005	1,1,2-trichloro 1,2,2-trifluoroethane (Freon ingredient), methylene chloride, methyl ethyl ketone, trichloroethylene

a particular D-code to a waste stream is determined by the P/S codes associated with the operations by which the waste items were generated. Table 15 summarizes the relationship between various D-codes and the TA-55 P/S codes.

The following P/S codes are assigned only D008 due to the presence of leaded gloves: AAP, ACC, AO, BA, BAC, BC, BL, BM, CA, CC, CH, COD, CR, CRD, DA, DF, DP, FA, FC, GMS, HC, HRS, IN, JA, LC, M1, M2, MM, M4, MAG, MAS, MF, MO, MP, MW, OY, PA, PF, PH, PR, PS, RD, RL, RM, SBB, SCB, SMIS, SRL, UA, UPS, US, US2, VD, VP2, VS, WE, and ZD.

9.0 VERIFICATION THAT IGNITABLE, REACTIVE, AND CORROSIVE WASTES WERE EXCLUDED

According to the WIPP WAP, "The prohibition of liquids and containerized gases prevents the shipment of corrosive, ignitable, or reactive wastes." The waste streams covered by this AK report have no listings for corrosivity, reactivity, or ignitability. Administrative controls on waste packaging were in place at various times to ensure the absence of such items from the waste stream.

- Liquids were prohibited from solid waste streams at LANL when the Plutonium Recovery Facility opened in January 1978. A waste management procedure written to cover operations at the new facility, *TA-55 Standard Operating Procedure (SOP)* (406-GEN-R00), stated that "Liquids are not permitted in any container of solid waste materials" (TWCP-3943). Currently, *TA55 Waste Management* (TA-55-RD-539) requires that no liquids be disposed of as a solid waste unless the liquid has been absorbed into some media (like vermiculite) that does not carry a D001 code (TWCP-3943).

- Chemical Waste Disposal Requests (see Attachment 7), introduced in June 1980, included check boxes that the waste generator was required to check if the waste contained corrosive acids or bases, or pyrophoric, flammable, corrosive, explosive, toxic, carcinogenic or highly reactive materials. The Certification Plan (TWCP-697) and related Generator Attachments (TWCP-701) were implemented in 1987. Waste generators are required to sign a statement on the WODF documenting that the waste contains "no free liquids, pyrophorics, explosives, compressed gases, powders or materials other than the indicated matrix." Checkboxes are also present for indicating the presence or absence of corrosive chemicals. Full implementation of this generator statement occurred in May 1987.

- Waste management inspectors perform visual verification of the waste prior to its initial packaging, thus allowing the inspectors to verify the generator's WODF statement (TWCP-701, Sections 3.8.5 to 3.8.6) (*Performing Visual Examinations of TRU Waste* [NMT7-WI2-HCP-TA55-013]).

Table 15. D-Listings Applicable to Specific P/S Codes

P/S Code	Applicable D-Listing
AAP	*D008
AC	D007, *D008, D009, D011, D018, D022, D038
AC1	D007, *D008, D009, D011, D018, D022, D038
AC2	D007, *D008, D009, D011, D018, D022, D038
ACC	*D008
ACD	D005, D006, D007, D008, D009, D011
ACL	D007, *D008, D009
AD	D004, D005, D006, D007, D008, *D008, D009, D010, D011, D019, D039
AL	D005, D006, D007, D008, *D008, D009, D011
AO	D006, D007, D008, *D008, D009, D011
AP	D007, D008, *D008, D009
APD	D007, D008, *D008, D009, D019, D021, D022, D039
ARI	D007
AS	D006, D007, D008, *D008, D011
ASP	*D008
AT	D005, D006, D007, D008, *D008, D011
ATL	D005, D006, D007, D008, *D008, D009, D011
AX	D007, *D008, D009
BA	*D008
BAC	*D008
BC	*D008
BF	D006, D007, D008, *D008, D011
BL	*D008
BM	*D008
BT	D008, *D008
BU	D006, D007, D008, *D008, D011
CA	*D008
CC	*D008
CD	D005, D006, D007, D008, *D008, D009, D011
CF	D006, D007, D008, *D008, D009, D011, D019, D021, D022, D039

Table 15. D-Listings Applicable to Specific P/S Codes (continued)

P/S Code	Applicable D-Listing
CH	*D008
CK	D005, D006, D007, D008, *D008, D009, D011
CL	D007, D008, *D008, D009
CLRD	D007, D008, *D008, D009
CLS	D007, D008, *D008, D009, D019, D021, D022, D039
COD	*D008
COL	D005, *D008
CPOD	*D008, D011
CR	*D008
CRD	*D008
CS	D007, D008, *D008, D009
CSE	D007, D008, *D008, D009, D039
CV	D005, D006, D007, D008, *D008, D009, D011, D019, D039
CW	D007, D008, *D008, D009, D011, D019, D021, D022, D039
CX	D007, D008, *D008, D009, D011
CXL	D007, D008, *D008, D009
DA	*D008
DF	*D008
DO	D005, D006, D007, D008, *D008, D009, D011 (
DOP	D008, *D008
DP	*D008
DS	D005, D006, D007, D008, *D008, D009, D011
ED	D005, D006, D007, D008, *D008, D009, D011
EDC	D007, *D008, D009
EL	D040
EOC	D007, *D008, D009
ER	D006, D008, *D008
ETD	D005, D006, D007, D008, *D008, D011
EV	D006, D007, D008, *D008, D009, D011
EXT	D005, D006, D007, D008, *D008, D009, D011

Table 15. D-Listings Applicable to Specific P/S Codes (continued)

P/S Code	Applicable D-Listing
FA	*D008
FC	*D008
FDL	D004, D005, D006, D007, D008, *D008, D009, D010, D011
FF	*D008, D040
FLU	D004, D005, D006, D007, D008, *D008, D009, D010, D011
FX	D006, D007, D008, *D008, D009, D011
GMS	*D008
GPHS	*D008
HC	D008
HCD	D005, D006, D007, D008, *D008, D009, D011
HD	D005, D006, D007, D008, *D008, D009, D011
HGMS	D006, D007, D008, D009, D011
HP	D007, D008, *D008, D009, D011, D019, D021, D022, D039
HRA	D004, D005, D006, D007, D008, *D008, D009, D010, D011
HRS	*D008
IA	D006, D007, D008, *D008, D009, D011
IAM	D005, D006, D007, D008, *D008, D009, D011
IB	D005, D006, D007, D008, *D008, D009, D011
ICP	D007, *D008, D009
IE	*D008
IN	*D008
IS	D005, D006, D007, D008, *D008, D011
IX	D005, D006, D007, D008, *D008, D009, D011
JA	*D008
KBTF	D008
LC	*D008
LD	D007, D008, *D008, D009
LG1	D006, D008, *D008
LG2	D006, D007, D008, *D008, D009, D011
LI	D005, D006, D007, D008, *D008, D009, D011

Table 15. D-Listings Applicable to Specific P/S Codes (continued)

P/S Code	Applicable D-Listing
LR	D005, D006, D007, D008, *D008, D009, D011
M1, M2, MM, M4	*D008
MA	*D008, D035, D040
MAG	*D008
MAS	*D008
MB	D007, *D008, D009
MD	D008
ME	D007, *D008, D040
MELL	D006, D007, D008, *D008, D009, D011
MF	*D008
ML	D006, D008, *D008
MO	*D008
MP	*D008
MPD	D005, D006, D007, D008, *D008, D009, D011
MS	D007, D008, *D008, D009
MTL	*D008
MW	*D008
NC	D006, D008, *D008
NL	D006, D008, *D008
OD	D006, D007, D008, *D008
OH	D006, D007, D008, *D008, D009, D011
OR	D005, *D008
OY	*D008
P1	*D008
PA	*D008
PAF	*D008
PB	D007, D008, *D008, D009
PCH	D007, *D008
PE	D004 (1984–1985), *D008
PF	*D008

Table 15. D-Listings Applicable to Specific P/S Codes (continued)

P/S Code	Applicable D-Listing
PH	*D008
PI	*D008
PK	D006, D007, D008, *D008, D011
POSM	D005, D006, D007, D008, *D008, D011
PR	*D008
PRR	D007, D009
PS	*D008
PT	D007, D008, *D008
PTP	*D008, D019
PTS	D005, D006, D007, D008, *D008, D011
PUB	D007, D008, *D008, D009
PX	D006, D007, D008, *D008, D011, D019
R8	D006, D007, D008, *D008, D009, D011
R8 (sucrose)	*D008
RA	D006, D007, D008, *D008, D011
RASS/RSS	D004, D005, D006, D007, D008, *D008, D009, D010, D011, D019
RB	D006, D007, *D008
RBJ	D006, D007, *D008
RC	D005, D006, D007, D008, D011
RCI	*D008
RCM	D005, D006, D007, *D008, D009, D011
RD	*D008
RFX	D005, D006, D007, D008, *D008, D009, D011
RL	*D008
RM	*D008
RO	D006, D008, D040
RR	D005, D006, D007, D008, *D008, D009, D011
SA	D007, D008, *D008, D009, D018, D038
SB	D005, D006, D007, D008, *D008, D011
SBB	*D008

Table 15. D-Listings Applicable to Specific P/S Codes (continued)

P/S Code	Applicable D-Listing
SC	D005, D006, D007, D008, *D008, D009, D011
SCB	*D008
SCP	*D008
SD	*D008
SE	D007, D008, *D008, D009, D039
SL	D005, D006, D007, D008, *D008, D009, D011
SMIS	*D008
SO	D004, D005, D006, D007, D008, *D008, D009, D010, D011
SP	D006, D007, D008, *D008, D009, D011
SRL	*D008
SS	D006, D008, *D008
SSD	D006, D007, D008, *D008
SSMD	*D008, D009 (D-listed chemicals only used from 06/94 to 08/94)
STF	D007, *D008
SX	*D008
TDC	D005, D006, D007, D008, D011
TSC	D005, D006, D007, D008
UA	*D008
UPS	*D008
US	*D008
US2	*D008
VC	D006, D008, *D008
VD	*D008
VP1	*D008, D009 (D-listed chemical only used from 09/85 to 10/85)
VP2	*D008
VP3	*D008, D009, D011
VS	*D008
VU, VUL	D005, D008, *D008
WE	*D008
WM	D007, D008, *D008, D009, D022, D035, D040 (D-listings are not applicable after 1993 with the exception of *D008)

Table 15. D-Listings Applicable to Specific P/S Codes (continued)

P/S Code	Applicable D-Listing
WS	*D008
X0, XO	D007, D008, *D008, D009, D022, D035, D040 **NOTE:** The same set of HWNs have been assigned to P/S codes WM, X0, and XO in order to be conservative, as discussed in *Acceptable Knowledge Report for Miscellaneous Operations at LANL* (TWCP-AK-2.1-004,R.2/IC1, Section 3.5.10).
XES	D004, D005, D006, D007, D008, *D008, D009, D010, D011
XP	D004, D005, D006, D007, D008, *D008, D009, D010, D011
ZD	*D008

*D008 has been assigned to most of the P/S codes because of leaded gloves.

- In addition to the above-mentioned prohibitions on explosives in waste, explosives were altogether prohibited until installation of the Impact Test Facility in the early 1990s. In case of a misfire or unconsumed explosives, a procedure is in place to ensure that explosives do not enter the waste stream (TWCP-4720).

- The Waste Profile Request Form (WPRF), which has been in use at LANL since 1991, includes a statement which is authenticated by the waste generator, that the waste is not ignitable (flash point >200 °F), reactive, or corrosive.

- The Generator Attachments to the Certification Plan were updated in 1995 (TWCP-700) but the prohibition on liquids in the waste, and the waste management inspection, remained in effect.

- The Project 2010 Certification Plan, current revision, and TWIDs prohibit liquids in waste and verified by waste management.

Hence, since the inception of plutonium recovery operations, corrosive wastes have been excluded from solid wastes through the prohibition of liquids. Controls on reactive wastes are discussed in Sections 3.5.1 and 3.5.2.

Controls have also been in place to ensure the exclusion of ignitable constituents. D001 does not apply to wastes in these waste streams despite the use of spent non-halogenated solvents (HWN F003) for the following reasons:

- Solutions containing spent non-halogenated solvents are sent to the RLWTF if they are below the DL for plutonium.

- If above the DL, the solutions are sent to aqueous activities as part of chloride or nitrate operations. Aqueous recovery steps include dissolution of any solid plutonium in hydrochloric or nitric acid, followed by plutonium recovery by ion exchange. The solutions are then below the DL and are either sent to the RLWTF or to the evaporator.

- Rags that are above the DL for plutonium are thermally decomposed, which destroys any organic component.

- Rags that are below the DL for plutonium are discarded as combustible debris, but headspace gas analyses support the contention that the solvents are below the limits established by the WIPP WAC.

- Finally, 100 percent of the drums are subjected to headspace gas analysis, and drums with total potentially flammable VOC concentrations above the limit established by the WIPP WAC are prohibited from being shipped to the WIPP.

The absence of these prohibited items is verified through radiography of each waste container and visual examination of selected containers during TWCP characterization

activities. Any free liquids are absorbed and discarded in an appropriate waste stream and containerized gases that are found to be present are removed before waste certification.

10.0 VERIFICATION THAT INCOMPATIBLE CHEMICALS WERE PROHIBITED

Controls are in place to ensure chemical compatibility for the waste contents and the TRUPACT-II shipping containers. Section 9.0 summarizes administrative controls in place that prohibit incompatible chemicals in the waste and measures taken to verify their absence. In addition, all waste containers shipped to TA-54 for storage are evaluated for potentially incompatible chemicals in accordance with 49 CFR Subpart C—Segregation and separation chart of hazardous materials; Section 177.848, Segregation of hazardous materials, and are determined to be in compliance with this requirement.

For waste that has been generated after the implementation of the 1987 Certification Plan, Generator Attachments, waste generators signed a statement on the WODF for each waste item specifying that the waste contained "no free liquids, pyrophorics, explosives, compressed gases, powders or materials other than the indicated matrix." Prior to the installation of the Impact Test Facility in the early 1990s, explosives were prohibited from the Plutonium Recovery Facility. In addition, waste management inspectors performed visual inspection of the waste prior to its initial packaging, thus allowing the inspectors to verify the generator's WODF statement.

Chemical compatibility analyses were performed for the TRUCON codes, which indicated that all chemicals and the waste matrix are compatible at levels greater than trace amounts (*Content Code Assessments for LANL TRUCON Codes* [DOE/WIPP-89-004]). During the AK search, additional chemicals were identified that necessitated a new compatibility analysis, which has been completed.

11.0 VERIFICATION THAT THERE ARE NO COMPRESSED GASES, FREE LIQUIDS, NONRADIONUCLIDE PYROPHORICS, SEALED CONTAINERS GREATER THAN FOUR LITERS IN VOLUME, OR >1% RADIONUCLIDE PYROPHORICS

Most gases used at the Plutonium Facility are stored outside the building and the gas is plumbed into the glovebox from outside the building (TWCP-4164). Occasionally, a lecture bottle is used for an operation inside the building, but these bottles are kept outside of the glovebox with the gas plumbed into the glovebox. Consequently, compressed gas cylinders or containers are not expected to be in any of the TRU wastes generated by recovery operations.

Spray cans, especially WD-40, were in common use in gloveboxes until May 1992 (TWCP-4166). These were routinely discarded as noncombustible debris waste. From 1988 until May 1992, the protocol was to vent or puncture the spray cans inside the glovebox; venting was indicated by inserting a metal wire into the valve. After May 1992, spray cans are no longer used in gloveboxes.

Verification that individual waste drums do not contain compressed gases, free liquids, or sealed containers greater than 4 L in volume is obtained from radiography of each waste container and visual examination of selected containers during Project 2010 characterization activities. Any free liquids are absorbed and any sealed containers greater than 4 L in volume, or unpunctured or unvented gas containers, are removed before waste certification.

The effectiveness of administrative and procedural controls on the prohibition of pyrophorics in TRU waste is verified through audits. For items of pyrochemical salt waste, the procedures of oxygen sparging and/or carbonate oxidation are used since May 1987 to ensure that pyrophorics were oxidized. In addition, screening tests on similar pyrochemical salts and residues (which contain higher amounts of plutonium) at the RFETS (TWCP-2501) have shown (1) no autoignition, (2) no spontaneous combustion, and (3) no sparking. Experimental results on the reactivity of direct oxide reduction (DOR) salt with water and the reactivity in air of heated calcium metal nodules from DOR salts indicate the absence of "dangerous when wet materials" and pyrophoricity in these salts (TWCP-3730, TWCP-3731, TWCP-3732).

Chemical Waste Disposal Requests dated as early as June 1980 included boxes that were required to be checked if the waste contained pyrophoric, flammable, corrosive, or explosive materials (see Attachment 7, Chemical Waste Disposal Request).

In addition, for wastes generated after the implementation of the 1987 Certification Plan, associated waste packaging procedures, and quality assurance systems, the waste generator has signed a statement on the WODF for each waste item stating that waste contains "no free liquids, pyrophorics, explosives, compressed gases, powders or materials other than the indicated matrix." The Attachments to the Certification Plan describe how these restrictions are verified by waste management personnel (TWCP-701, Sections 3.8.5 through 3.8.7).

The Project 2010 Certification Plan, current revision, and the TWIDS prohibit compressed gases, free liquids, nonradionuclide pyrophorics, sealed containers greater than four liters in volume, or >1% radionuclide pyrophorics in waste and verified by waste management.

12.0 VERIFICATION THAT THERE ARE NO POLYCHLORINATED BIPHENYLS (PCBs) IN THE WASTE STREAM

No PCBs were introduced into the TRU waste streams, based on documentation in procedures reviewed during the AK investigation and summarized in lists of inputs documented in the TA-55 AK reports.

- In the cement fixation operation (P/S codes CF and HP), oils are sometimes added to drums of cemented waste. There is no indication these oils contain PCBs, and they are added to the 55-gallon drums of cement in small quantities (maximum of 6 liters [TWCP-3568/N-74]). The oils are primarily vacuum pump oils, along with some oils

used in heat-treating (cooking or silicone oils) or in grinding (TWCP-3568/N-82). None of these oils are known to contain PCBs.

- All transformers known to contain PCBs have been tracked from initiation of recovery operations in 1978. When any transformer oil is drained, the oil is handled by a subcontractor who is wholly responsible for its disposal; this oil does not enter the LANL disposal operations (TWCP-3568/N-82).
- Ballast in fluorescent light fixtures could contain PCBs, but these light fixtures are outside the gloveboxes and hence would not enter the TRU waste stream.
- Oil-filled capacitors are not known to be used in gloveboxes.

In addition, if the possibility exists for the legacy waste to contain PCBs, RTR operators are required to check for indications of PCB-containing materials or PCB-contaminated materials. If there is reason to suspect that an item may contain PCBs (based on AK, operator training, or previous operator experience), then the operator records this information on the Radiography Data Sheet, which is reviewed before waste certification.

13.0 REMEDIATION OF PROHIBITED ITEMS

Prohibited items are known to be present in containers from all of these waste streams. Procedures allowed containers greater than 4L, sealed with tape, to be used for waste packaging until WIPP certification procedures were implemented. Small vials of free liquids and some aerosol cans also have been observed. Lead shielding was often used to increase handling safety, and thick shielding can obscure RTR observations, requiring visual examination of the contents.

Prohibited items are detected by RTR and reported with the RTR results. Waste containers with prohibited items are repackaged, during which time liquids are absorbed, sealed containers greater than 4L are opened, and other items removed and segregated. Project 2010 accomplishes this using Prohibited Item Dispositioning (TWCP-DTP-1.2-076).

14.0 DESCRIPTION OF THE NUMBER OF CONFINEMENT LAYERS USED FOR WASTE PACKAGING

The maximum number of layers and default TRUCON codes for each waste stream are provided in the Waste Stream Profile Form packages, which are submitted by Project 2010 to CBFO for approval. This section describes how the default TRUCON codes are determined.

Waste drum packaging procedures for waste streams have been modified several times since the beginning of recovery operations. TRUCON code assignments made by the waste generator are compiled in the AKIS but are not used for drum certification unless they are verified by RTR or were assigned after implementation of procedures approved

by CBFO. When TRUCON codes from AK are absent, they are assigned to the waste container in accordance with the default packaging configurations and associated TRUCON codes indicated in the Waste Stream Profile Forms that reflect the packaging protocols in effect during different periods of time (TWCP-816).

TRU waste streams are primarily generated from operations performed in gloveboxes. The waste material is placed directly into bag-out bags (also called inner bags) through an opening in the glovebox where the bag is attached, and the bag is then closed and detached from the glovebox. TRU waste streams may also be generated from "hot jobs" outside of the glovebox, such as valve changes, or from decontamination of spills or other releases. In these cases, the waste is placed directly into one (or possibly more) inner bag at the work area.

A minor source of waste in some waste streams is room trash that was originally considered to be low-level waste, which is collected in plastic bags inside cardboard boxes. Occasionally, when assayed, these boxes are determined to be TRU waste. These boxes may be sorted to remove the "hot" item, or the whole box may be bagged and sent to the TRU packaging area for placement in drums assigned to an appropriate TRU waste stream. When this occurs, the P/S code WM is assigned to the waste. Due to the additional layers of plastic that are present when this operation occurs, drums with the P/S code WM are assumed to contain one more layer of internal packaging than other drums.

For legacy waste, the letter designator of the TRUCON code is assigned using packaging information from the following sources, which are listed in order of priority of usage:

- Visual Examination (VE)/RPK batch data reports (if available)
- RTR batch data report indication of the observed layers of packaging
- If packaging filter information is indeterminate, use the TRUCON code for "no filters in packaging"
- If RTR information is indeterminate, use the default assignment given in the Waste Stream Profile Form package
- If no default code is assigned, assign code based on most conservative (maximum packaging layers) TRUCON letter designator

This guidance only applies to retrievably stored waste. Newly generated waste is packaged under procedures approved by Project 2010 and CBFO, and are assigned correct TRUCON codes.

15.0 CITED PROCEDURES AND REQUIREMENTS DOCUMENTS

- 40 CFR Part 261—Identification and Listing of Hazardous Wastes

- 49 CFR Part 261, Subpart C—Segregation and separation chart of hazardous materials. Section 177.848, Segregation of hazardous materials
- *Acceptable Knowledge Accuracy Report* (TWCP-AK-2.1-012,R.0)
- *Acceptable Knowledge Documentation* (TWCP-QP-1.1-021)
- *Acceptable Knowledge for Isotope Ratios* (TWCP-AK-2.1-020)
- *Acceptable Knowledge Information Summary for LANL Transuranic Waste Streams* (TWCP-AK-2.1-019)
- *Assignment of Waste Matrix Codes* (TWCP-DTP-1.2-053)
- *Calculation of UCL_{90} Values* (TWCP-DTP-1.2-006)
- *Content Code Assessments for LANL TRUCON Codes* (DOE/WIPP-89-004)
- *Determining Isotopic Ratios in Waste Containers Using the RANT PC/FRAM Assay System* (TWCP-DTP-1.2-029)
- *DOE Order 5820.1 and 5820.2,* Management of Transuranic Contaminated Material, U.S. Department of Energy, 09/30/82 and 02/06/84
- *DOE Order 435.1* Radioactive Waste Management, Department of Energy, Environmental Management, 2001
- *Hazardous Waste Facility Permit for the Waste Isolation Pilot Plant* (EPA ID No. NM4890139088-TSDF) (Attachment B, Waste Analysis Plan)
- *Headspace Gas Sampling and Analysis Using an Automated Manifold* (TWCP-DTP-1.2-041)
- *Inspecting, Labeling, and Preparing TRU Waste Containers* (NMT7-WI1-SOP-TA55-013)
- *Inspecting, Packaging, Rejecting, and Remediating Transuranic Waste for WIPP and for TA-54 Safe Storage* (NMT7-SOP-TA55-013), with associated detailed Work Instructions (WI)
- *Nonconformance Reporting and Tracking* (TWCP-QP-1.1-007)
- *Operating the High Efficiency Neutron Counter (HENC) Using INCC* (TWCP-DTP-1.2-059)
- *Packing TRU Waste Containers* (NMT7-WI3-SOP-TA55-013)

- *Performing Nondestructive Testing Using the Mobile Real-Time Radiography System* (TWCP-DTP-1.2-008)
- *Performing Visual Examinations of TRU Waste* (NMT7-WI2-SOP-TA55-013)
- *Purex Technical Manual* (WHC-CM-5-25, 8/25/88)
- *Reconciliation of Visual Examination and Radiography Information* (TWCP-QP-1.1-028)
- *Records Management* (TWCP-QP-1.1-004)
- *Sealing TRU Waste Containers* (NMT7-WI4-SOP-TA55-013)
- *TA-55 Standard Operation Procedure (SOP)* (406-GEN-R00)
- *TA-55 Transuranic Waste Interface Document* (NMT7-AP-TA55-018)
- *Transuranic Package Transporter (TRUPACT)-II Content Codes* (DOE/WIPP-89-004)
- *U.S. Atomic Energy Commission AEC Manual:* Chapter 0511, Radioactive Waste Management, AEC 1993
- *Waste Analysis at Facilities that Generate, Treat, Store and Dispose of Hazardous Waste* (EPA-530-R-94-024)
- *Waste Assay System Using the Combined Thermal Epithermal Neutron (CTEN) System* (TWCP-DTP-1.2-061)
- *Waste Assay Using the Passive-Active Neutron Assay System* (PAN) (TWCP-DTP-1.2-009)
- *Waste Assay Using the Tomographic Gamma Scanner* (TGS) (TWCP-DTP-1.2-011)
- *Waste Characterization Data Reconciliation with Acceptable Knowledge and Acceptable Knowledge Accuracy Reporting* (TWCP-DTP-1.2-064)
- *Waste Isolation Pilot Plant Transuranic Waste Baseline Inventory Report* (CAO-94-1005) (TWBIR)
- *Waste Visual Examination and Packaging* (TWCP-DTP-1.2-001)
- *WIPP Transuranic Waste Baseline Inventory Report* (CAO-94-1005)

ACCEPTABLE KNOWLEDGE ROADMAP

Waste Streams: TA-55-19, LA-NCD01, TA-55-30, LA-NHD01

Copies of these documents are in the TWCP RMDC Center. Refer to *Records Management* (TWCP-QP-1.1-004) for information on requesting copies.

TWCP Record No.	Information Category Code	Information	Source	Summary	Limitations
TWCP-351	B	Procedure for waste management practices at TA-55	TA-55 document 539-GEN-R02.	Document describes TA-55 waste management practices for solid and liquid wastes	None
TWCP-352	B	Description of plutonium recovery processes	*Wastes from Plutonium Conversion and Scrap Recovery Operations,* LA-11069-MS, March 1988.	Document describes the Pu residues and the various treatment approaches used in recovering plutonium from scrap	Document does not give information about RCRA constituents introduced or present in the processes
TWCP-697	C	Waste was controlled to meet WIPP WAC requirements as early as 1983	Los Alamos Certification Plan, 1983	Waste was controlled to meet WIPP WAC requirements as early as 1983. Generator Attachments were used to describe and reference specific generator procedures.	Overview document – Generator Attachments provide more detailed information.
TWCP-698	B	Gives Material Type compositions	NMT Memo, NMT-7 WM/EC-96-032 Benchmark Environmental Corp. Memo, AL-7193 BEC	Gives Material Type compositions	Does not give information on how material may fractionate in TA-55 waste operations.
TWCP-700	C	*Generator Attachment* to the *Certification Plan*	*TA-55 Attachment, 1955,* TRUWM-TA55-CPA-03, R00	Documents controls to meet WIPP WAC were implemented and how independent verification was accomplished.	Information is not extremely detailed.
TWCP-701	C	*Generator Attachment* to the *Certification Plan*	*TA-55 Attachment, 1987,* TRU-MST12-CPA-03,R00	Documents controls to meet WIPP WAC were implemented and how independent verification was accomplished.	Information is not extremely detailed.

* Information Category Codes: A = forms intended for use in waste certification, B = data from controlled databases and published documents, C = unpublished data, and D = interviews, memos, and letters

TWCP Record No.	Information Category Code	Information	Source	Summary	Limitations
TWCP-816	D	Jim Foxx Interview on Number of Layers of Packaging	C.L. Foxx, Los Alamos National Laboratory	Provides an explanation of why some waste containers may be packaged with 6 layers of confinement. Discusses determination of low-level waste (LLW) versus TRU after packaging.	No direct way to identify which specific containers have 6 layers of packaging
TWCP-882 (UCNI)	D	Secondary Radionuclides and Toxic Metals in TA-55 TRU Waste	Memo from Jim Foxx	Lists additional radionuclides and metals potentially in waste, subdivided by P/S code. Covers time period from 1978 to present.	Best information available, but it is based on worker recollection because other records are not available.
TWCP-886	C	Color Flow Diagram of Pu-operations at TA-55.	Diagram from Jim Foxx	Indicates that inputs are thermally treated and that heavy metals from inputs end up in the nitric acid evaporator bottoms.	Does not indicate solvent input to operations.
TWCP-887	D	Co-mingling of Defense and Non-Defense TRU Waste	Memo from Jim Foxx	Wastes generated from defense and non-defense activities were not segregated at TA-55 through 1997	None
TWCP-2501	B	"Backlog Waste Reassessment Baseline Book, Waste Form 34"	Rocky Flats Environmental Technology Site Report 1995	Page WF34-10 contains results of tests for corrosivity	Tests are on residues rather than waste that is lower in Pu content; hence, they are conservative.
Cl-25/ TWCP-3547 (UCNI)	D	Answers to questions about chloride processes	Interview with Jim Foxx, 9/23/99	Answers to questions on Chloride processes; C-AAC solvent list	None
TWCP-3568/ N-74	C	Chemical list; process description (P/S code CF)	Organic Liquid Emulsification, TRU-NMT2-DP-13, R00; TRUWM-TA55-DP-13-R00; 8/30/93 through 9/30/94	Emulsifying waste oil and other organic liquids for cement fixation.	None
TWCP-3568/ N-82	C	Clarification of specific activities within the nitrate operations at TA-55	Jim Foxx, SME, response to comments received on the draft *Acceptable Knowledge Report for TA-55 Nitrate Operations*, 2/25/00	Resolutions to the questions and issues raised by Pam Rogers during her review of the *Acceptable Knowledge Report for TA-55 Nitrate Operations*, 2/25/00	Information is based on SME knowledge.

* Information Category Codes: A = forms intended for use in waste certification, B = data from controlled databases and published documents, C = unpublished data, and D = interviews, memos, and letters

TWCP Record No.	Information Category Code	Information	Source	Summary	Limitations
TWCP-3730 (UCNI)	B	Pyrophoricity characterization	Characterization of Direct Oxide Salts (LA-CP-95-0098)	Hydrogen generation and pyrophoricity of DOR salts. Also gives reference for MSE, ER, and Cr-containing salts.	None
TWCP-3731	D	Sodium pyrophoricity in pyrochemical salts	Memo (MST-12-ARO-88-052)	Treatment of sodium in salts is effective	Sodium only
TWCP-3732	C	Experimental data on calcium pyrophoricity in salts	Memo (MST-12-ARO-88-077)	Treatment of calcium in salts is effective	Calcium only
TWCP-3943	B	Procedure for Waste Management at TA-55	TA-55 Document, 406-GEN-R00	Contains information on waste management procedures in 1978	None, but doesn't address today's waste management concerns
TWCP-4164	D	Answers to questions about various P/S codes	Interview with Jim Foxx, 10/16/00	Answers to questions on use of Ag, disposal of ash and resins, and use of gases.	None
TWCP-4166	D	Answers to questions about P/S codes DO, EV, HP, CF, OR, RM, PY	Interview with Jim Foxx, 10/17/00	Answers to questions on use of Cr and Ag, RCRA metals in cement, asbestos in furnaces and gloves, and disposal of spray cans used in gloveboxes.	None
TWCP-4720	B	Describes the procedure to be taken at TA-55 in the event of a misfire or unconsumed explosives (from the Impact Test Facility 40-mm gun, P/S codes ITF and ITF4) to ensure that explosives do not enter the waste stream	40-mm Powder Breech Project Waste Management Plan, Rev. 2 (issued March 27, 2000)	Procedure to be taken at TA-55 in the event of a misfire or unconsumed explosives (from the Impact Test Facility 40-mm gun) to ensure that explosives do not enter the waste stream	Does not appear to be a controlled document. Without revision history, cannot tell when this document was first issued, and how the potential for unconsumed explosives was addressed when the Impact Test Facility (ITF) began in 1996
TWCP-5086	B	P/S Codes for TA-55 Waste items, listed by drum	P/S codes for waste items in individual drums are either from the TA-55 Waste Management System or from the certified database	P/S codes for waste containers from TA-55	Only some drums are included

* Information Category Codes: A = forms intended for use in waste certification, B = data from controlled databases and published documents, C = unpublished data, and D = interviews, memos, and letters

TWCP Record No.	Information Category Code	Information	Source	Summary	Limitations
TWCP-5158	D	Chemical use in P/S code FF	Interview with Fred Hampel (TA-55 SME) on 4/19/01	Magnesium perchlorate was used in the glovebox line in P/S code FF, and was the only chemical used there. It was used as a water getter, and was changed once during the period 1987 to 1992. The spent chemical was sent to cement fixation, P/S code CF.	No information after 1992
TWCP-5164	D	Sources of Cs-137 and Pa-231 in TA-55 TRU waste	Interview with Jim Foxx (TA-55 SME) on April 2, 2001	Plutonium operations never handled Cs-137 or Pa-231 in any of the Pu processing areas at TA-55. However, Cs-137 is expected to be present in the wastes because it is a fission product of several Pu isotopes. Pa-231 is expected to be present (as a function of the age of the waste) because it is a decay chain daughter of Pu-239 and U-235.	None
TWCP-5165	D	Sources of Cs-137, Pa-231, and Cm-244 in TA-55 TRU waste	Interview with Jim Foxx (TA-55 SME) on April 11, 2001	Dominant source of Cs-137 expected to be due to residual contamination from original separation of Pu from production fuel. Cm-244 introduced in P/S code DOP starting in 1988, but could also show up after that date in IS, WE, CA and CF.	None
TWCP-5166	D	Secondary radionuclides used in P/S code PI	Interview with Jim Foxx (TA-55 SME) on April 11, 2001	Amendment of Foxx's 1997 memo (TWCP-882): P/S code PI was a user of U, Np and Am isotopes	None
TWCP-5167	D	Use of lead in P/S code DOP	Interview with Jim Foxx (TA-55 SME) on February 7, 2001	In addition to an encapsulated lead pig, P/S code DOP also used lead shielding (which therefore requires application of HWN D008 to its waste).	None

* Information Category Codes: A = forms intended for use in waste certification, B = data from controlled databases and published documents, C = unpublished data, and D = interviews, memos, and letters

TWCP Record No.	Information Category Code	Information	Source	Summary	Limitations
TWCP-5372	D	Vanadium pentoxide in waste generated by P/S codes SD and SS	Interview with Jim Foxx (TA-55 SME) on May 7, 2001	Vanadium pentoxide was used between February 1998 and June 1998. SME information indicates that waste from this work would have been packaged into containers that were closed by the end of December 1998.	None
TWCP-8003	D	Description of information developed for database system for tracking waste disposed and/or stored at TA-54, Area G	Report, "Documentation for Rad Waste ORACLE Database's List of Acceptable Radioisotopes, Specific Activities, Categories, and Regulatory Limits"	Information is provided on how specific activities were assigned for different material types	Developed to evaluate waste stored at TA-54, Area G
TWCP-9499	D	Memo regarding Actinium usage	Memo from Wayne Punjak regarding AC-227 usage	Information regarding a previously undocumented use of Actinium.	None
TWCP-9810	D	Memo regarding reporting U-234	Memo from Mike Baker regarding U-234 assay	Approach for calculating U-234 concentration based on U-235.	None
TWCP-11061	C	Headspace gas data collected prior to WAP becoming effective.	Review of Headspace Gas data from Pre-WAP Analysis for Additions to AK	Detailed information on the tentatively identified compounds found in pre-WAP HGAS batch data reports.	Pre-WAP and limited on waste streams covered.
TWCP-11062	C	Real-time-radiography data collected prior to WAP becoming effective.	Review of RTR Data from Pre-WAP Analysis for TA-55 Debris Waste	Summary information on the waste material parameters and prohibited items for TA-55 debris waste streams.	Only on TA-55 debris waste streams.
TWCP-12081	C	Interview with SME	Interview with Jim Foxx (TA-55 SME) on March 11, 2003	While vanadium pentoxide was used, no history or information regarding a spill was found. Therefore, the P120 HWN does not apply	None
TWCP-12088	B	Discussion of use of plastic ties	*Memo LAAMEP 2BL-006 To Stanley Kosiewicz*	Documents waste management practices regarding use of ties on bag-out closures.	None

* Information Category Codes: A = forms intended for use in waste certification, B = data from controlled databases and published documents, C = unpublished data, and D = interviews, memos, and letters

TWCP Record No.	Information Category Code	Information	Source	Summary	Limitations
TWCP-AK-2.1-002,R.2	A	Generator interviews and TWCP AK references	*Acceptable Knowledge Report for Chloride Operations at LANL*	Detailed information on each P/S code for chloride operations at TA-55	None
TWCP-AK-2.1-003,R.2	A	Generator interviews and TWCP AK references	*Acceptable Knowledge Report for Metal Operations at LANL*	Detailed information on each P/S code for metal operations at TA-55	None
TWCP-AK-2.1-004,R.2/IC1	A	Generator interviews and TWCP AK references	*Acceptable Knowledge Report for Miscellaneous Operations at LANL*	Detailed information on each P/S code for miscellaneous operations at TA-55	None
TWCP-AK-2.1-005,R.2	A	Generator interviews and TWCP AK references	*Acceptable Knowledge Report for Nitrate Operations at LANL*	Detailed information on each P/S code for nitrate operations at TA-55	None
TWCP-AK-2.1-006,R.2	A	Generator interviews and TWCP AK references	*Acceptable Knowledge Report for Pyrochemical Operations at LANL*	Detailed information on each P/S code for pyrochemical processes at TA-55	None
TWCP-AK-2.1-007,R.2	A	Generator interviews and TWCP AK references	*Acceptable Knowledge Report for Special Processing Operations at LANL*	Detailed information on each P/S code for special processing operations at TA-55	None
TWCP-AK-2.1-019 AND TWCP-AK-2.1-020	C	LANL TA-55 waste management database, LANL TA-54 TRU waste management database, and TWCP AK references based on generator's original data	*Acceptable Knowledge Information Summary for LANL Transuranic Waste Streams* and *Acceptable Knowledge for Isotopic Ratios*	Detailed information on each waste drum and waste stream	Reliability and completeness of waste generator data is highly variable, and this information summary is continually being updated

* Information Category Codes: A = forms intended for use in waste certification, B = data from controlled databases and published documents, C = unpublished data, and D = interviews, memos, and letters

MAP OF LANL

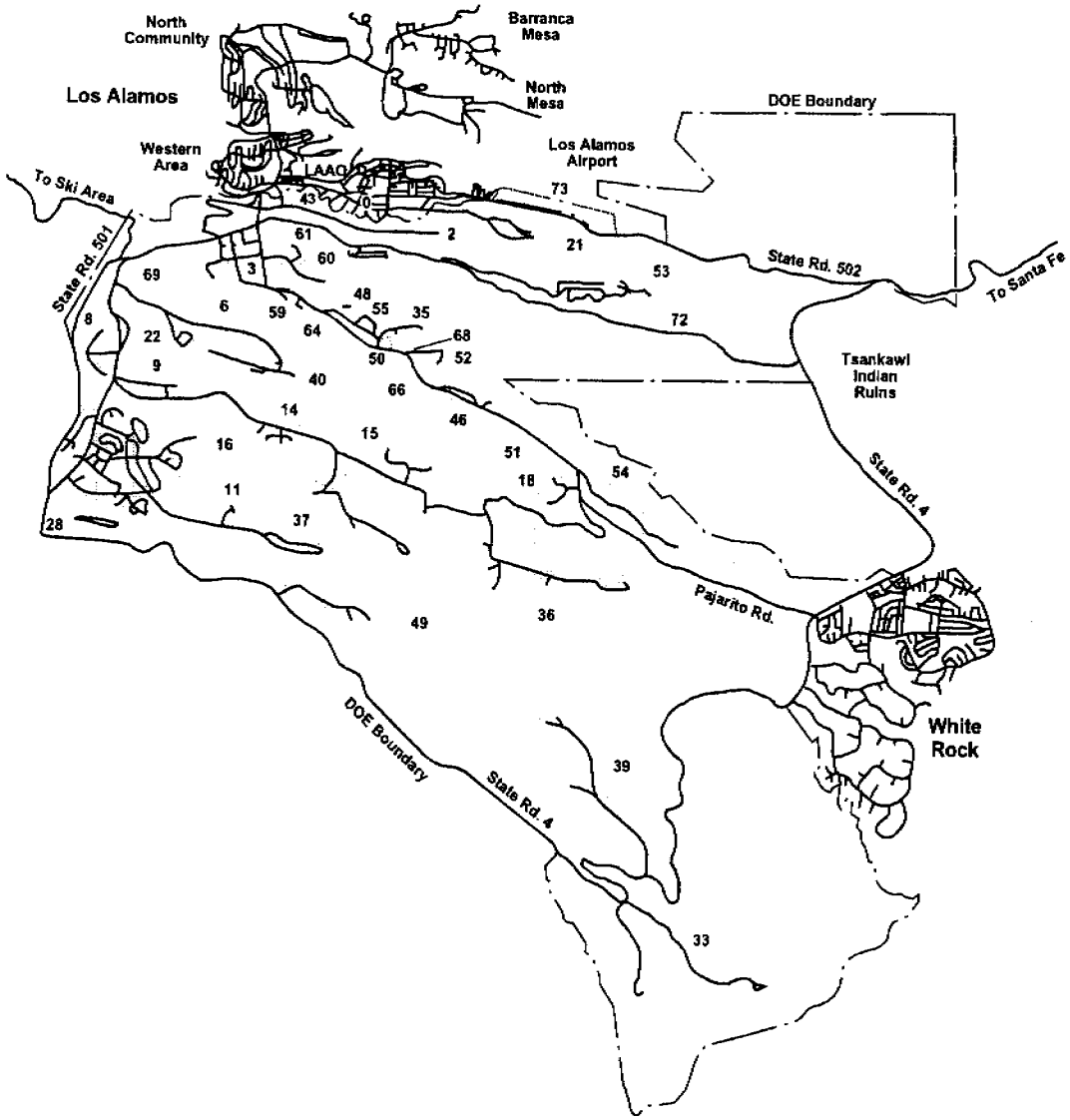

Technical Area Locations

TA-0	Unassigned Land Reserve
TA-2	Omega Site
TA-3	South Mesa Site
TA-5	Beta Site
TA-6	Two Mile Mesa Site
TA-8	Anchor Site West
TA-9	Anchor Site East
TA-11	K-Site
TA-14	Q-Site
TA-15	R-Site
TA-16	S-Site
TA-18	Pajarito Laboratory
TA-21	DP-Site
TA-22	TD-Site
TA-28	Magazine Area A
TA-33	HP-Site
TA-35	Ten Site
TA-36	Kappa Site
TA-37	Magazine Area C
TA-39	Ancho Canyon Site
TA-40	DF-Site
TA-41	W-Site
TA-43	Health Research Lab & DOE Headquarters
TA-46	WA-Site
TA-48	Radiochemistry Site
TA-49	Frijoles Mesa Site
TA-50	Waste Management Site
TA-51	Radiation Exposure Facility
TA-52	Reactor Development Site
TA-53	Meson Physics Facility
TA-54	Waste Disposal Site
TA-55	Plutonium Facility Site
TA-57	Fenton Hill Site
TA-58	Two Mile North Site
TA-59	OH-Site

MAP OF TA-55

Note: The Plutonium Facility, Building PF-4, is labeled PF-4 on this map.

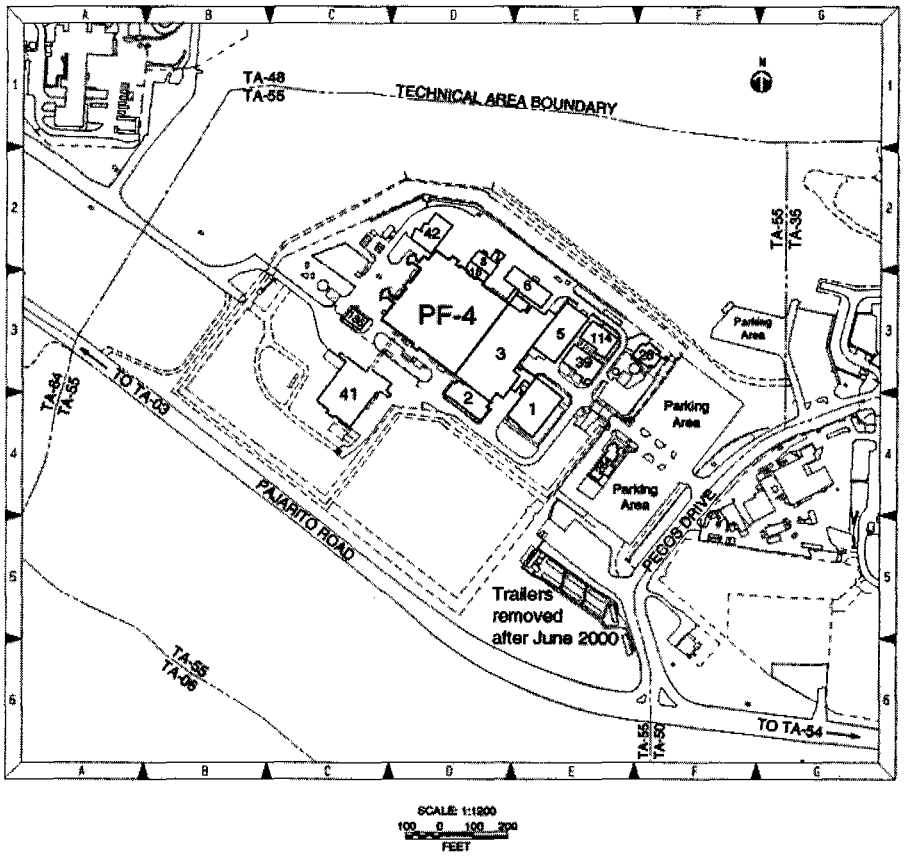

SIMPLIFIED FLOW DIAGRAM FOR GENERATION OF TRU WASTE: DEBRIS WASTE

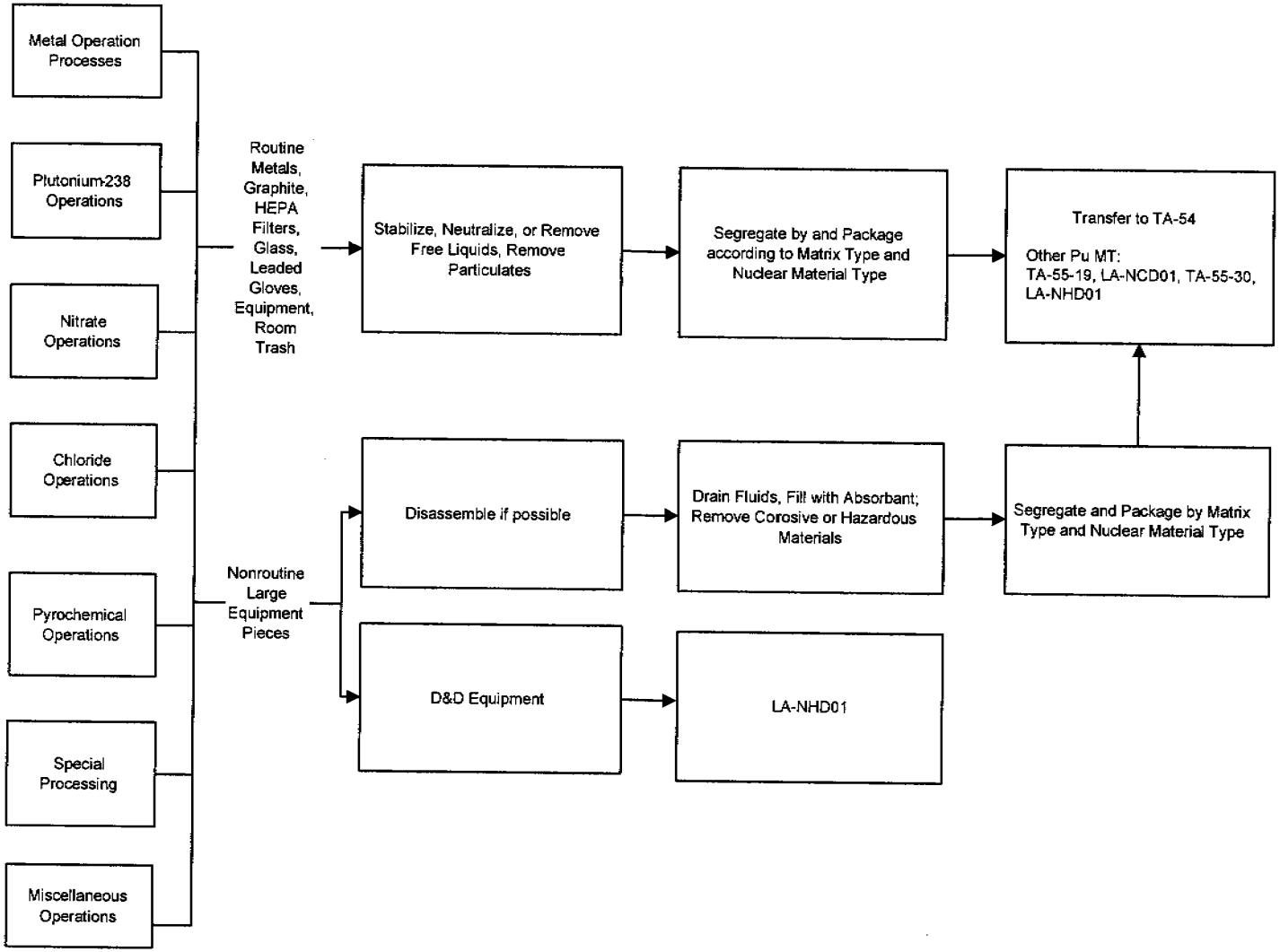

SIMPLIFIED FLOW DIAGRAMS

SIMPLIFIED FLOW DIAGRAM FOR CHLORIDE OPERATIONS

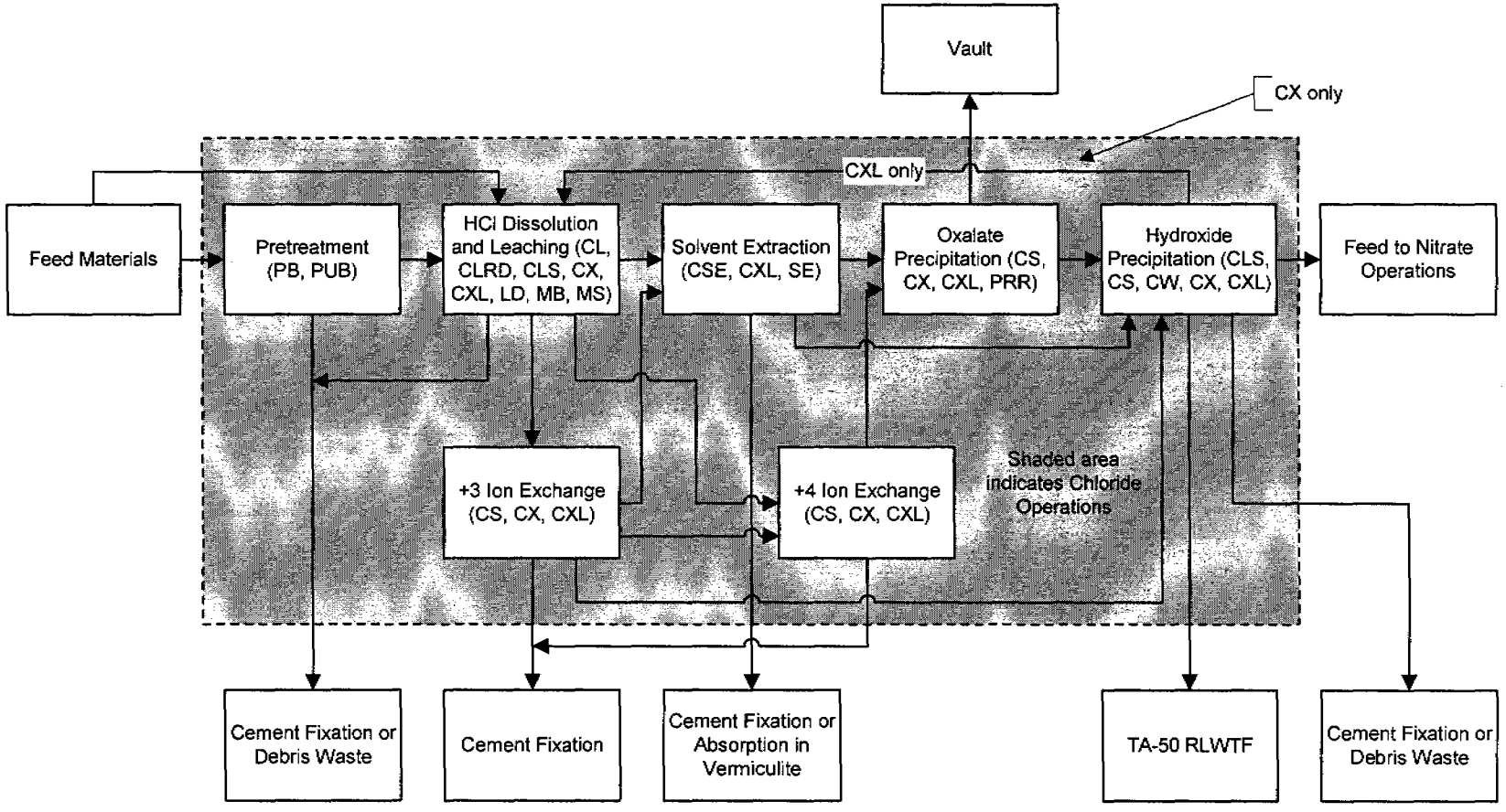

NOTE: Many of the P/S codes for chloride operations involve more than one step or activity in the flow diagram. Thus, the same P/S code can appear in more than one box on the flow diagram.

SIMPLIFIED FLOW DIAGRAM FOR METAL OPERATIONS (LEGACY)

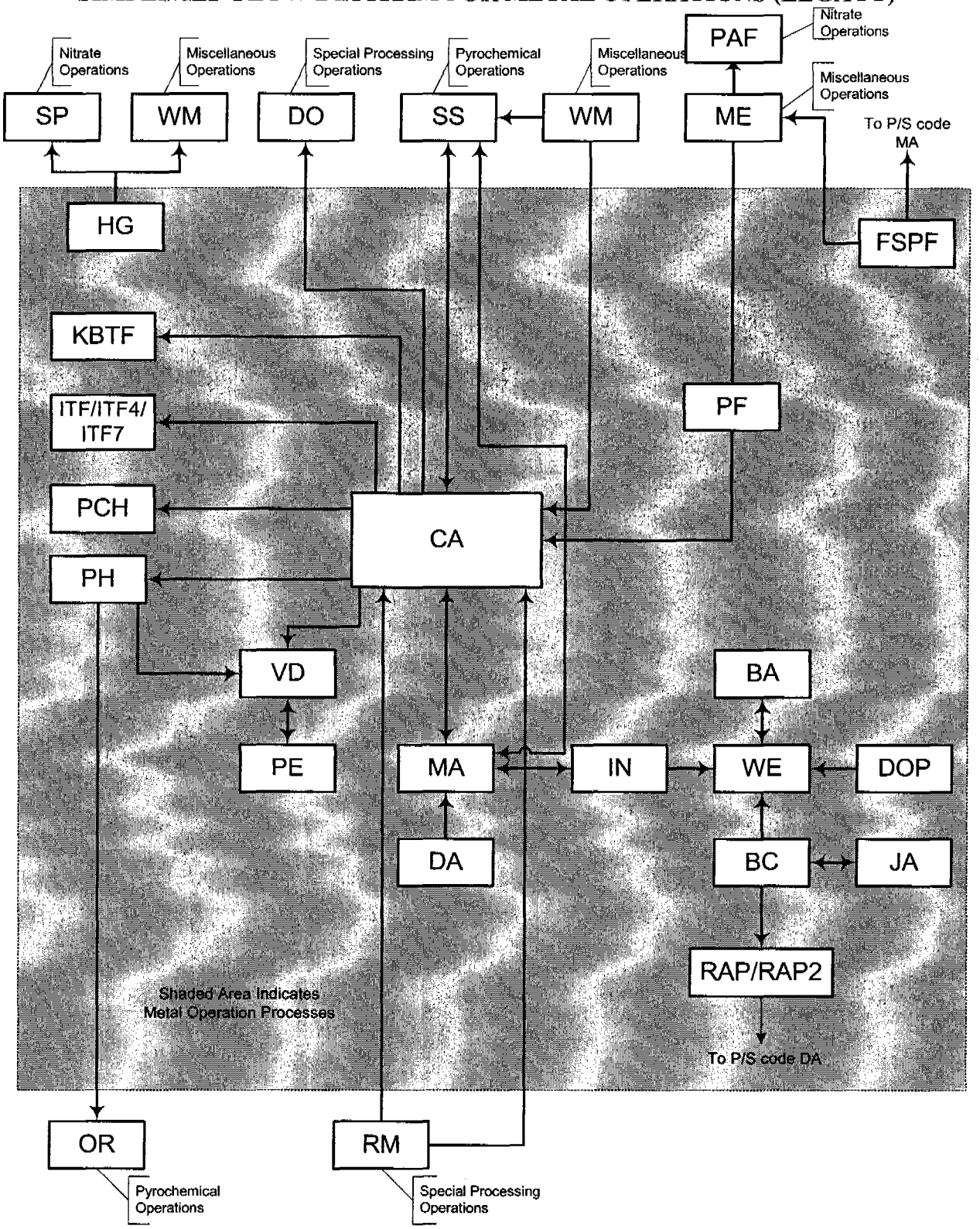

NOTE: All of these P/S codes may obtain feed material from or send product output to the vault.

SIMPLIFIED FLOW DIAGRAM FOR METAL OPERATIONS (LEGACY) (continued)

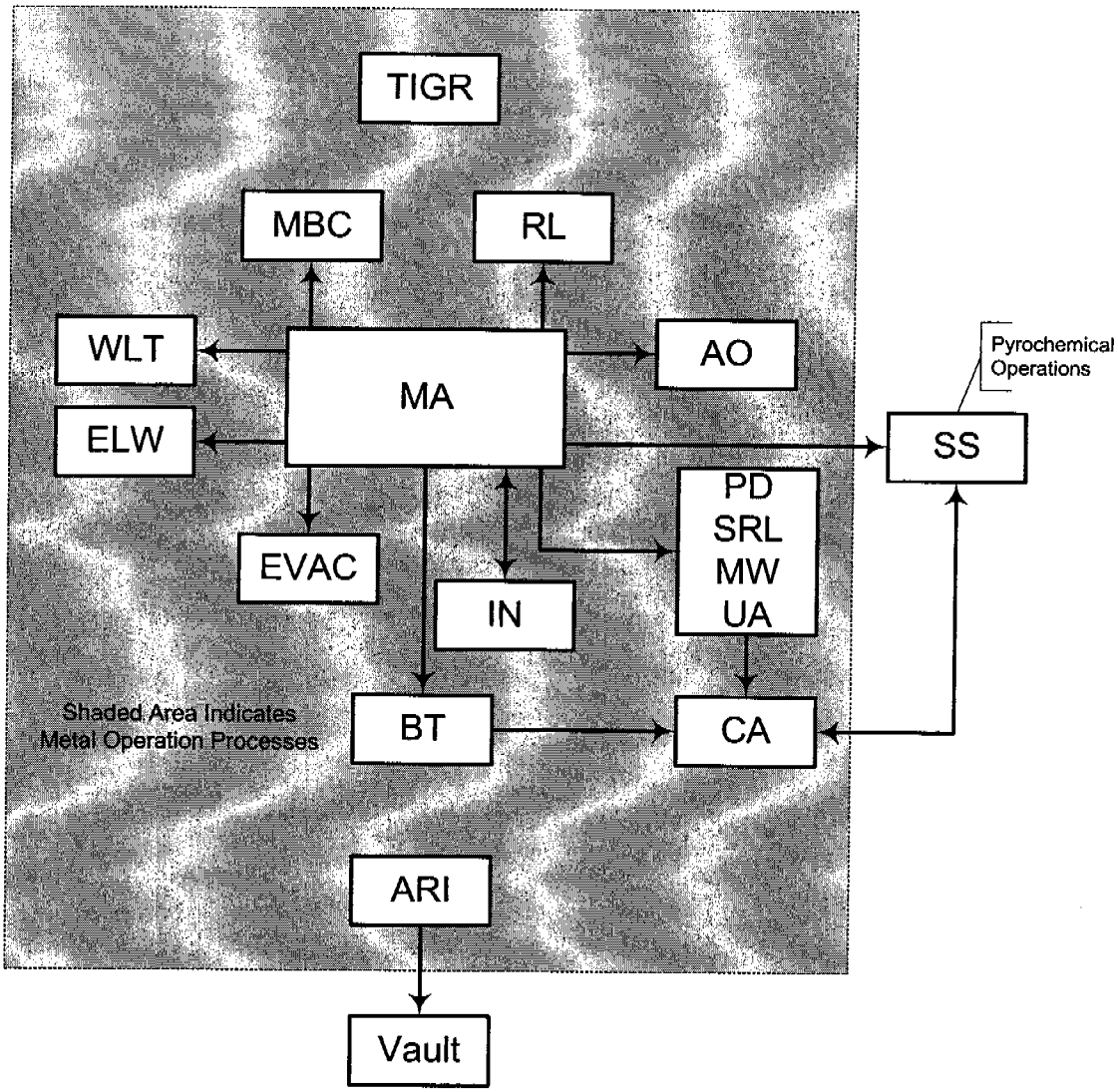

NOTE: All of these P/S codes may obtain feed material from or send product output to the vault.

NOTE: P/S code UA tracks uranium compounds from Pit Disassembly. Activities under this P/S code would be similar to those under P/S codes IN, MW, and WE.

SIMPLIFIED FLOW DIAGRAM FOR METAL OPERATIONS (LEGACY) (continued)

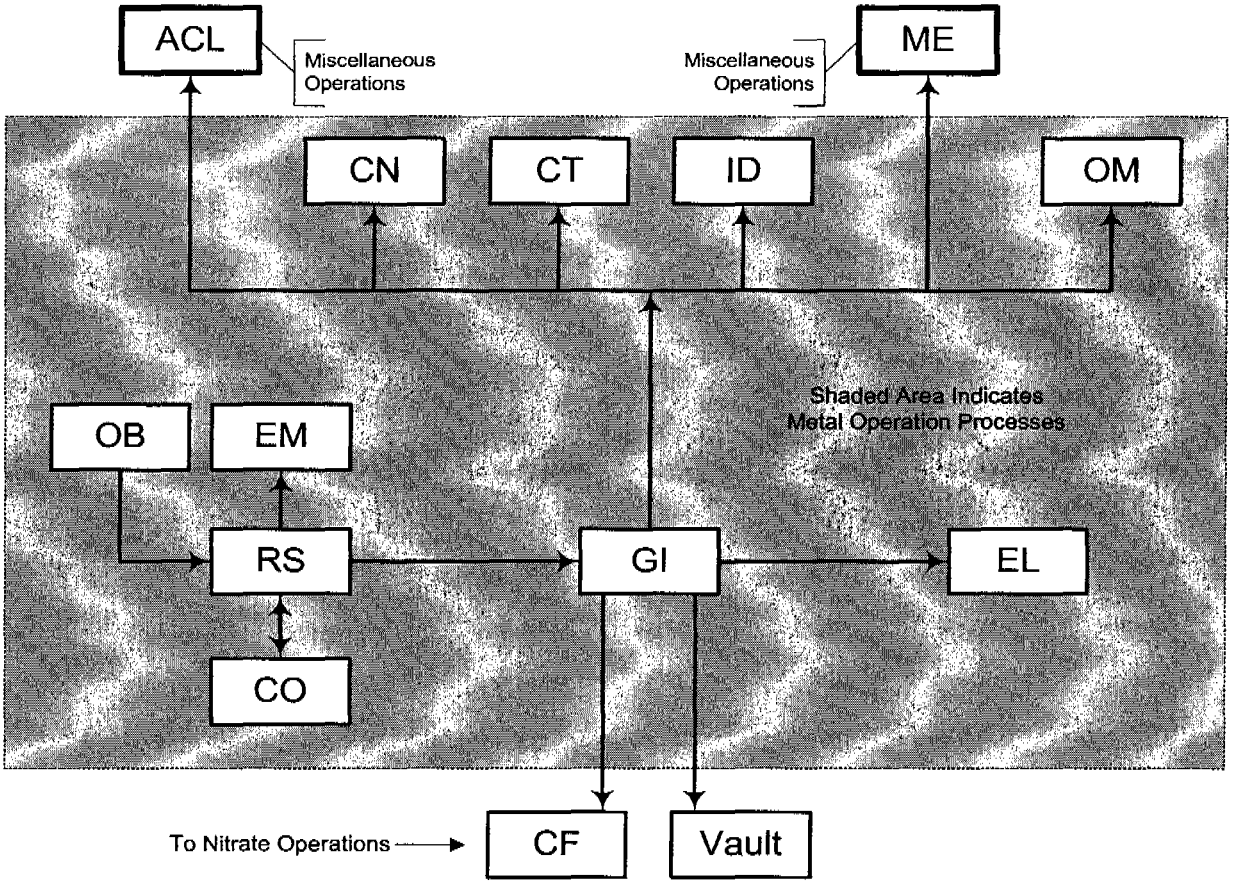

In 1988, P/S codes CO, GI, ID, OB, and RS were combined into P/S code FF. P/S codes CT, ID, and OM are status codes only, and probably do not generate TRU waste.

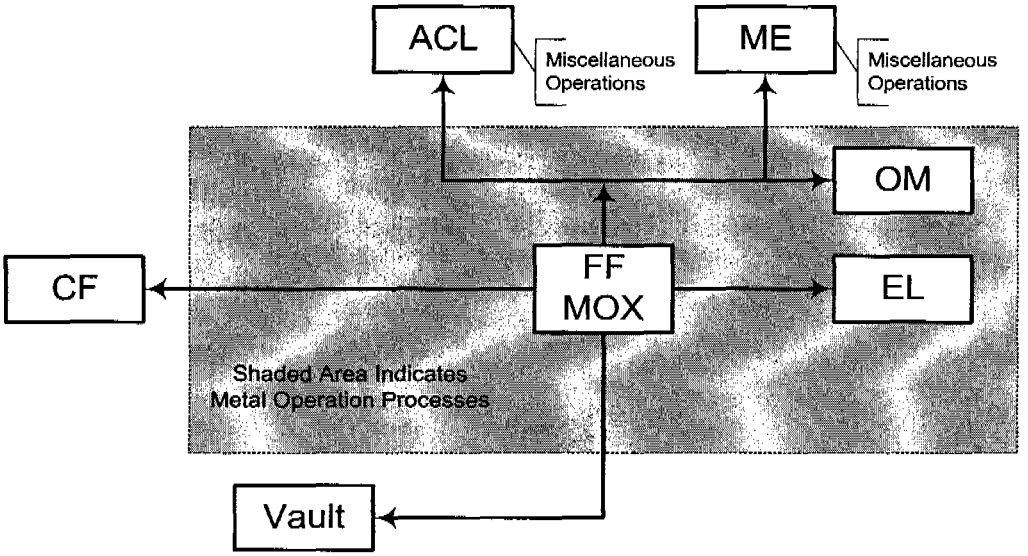

NOTE: All of these P/S codes may obtain feed material from or send product output to the vault.

SIMPLIFIED FLOW DIAGRAM FOR METAL OPERATIONS (NEWLY GENERATED)

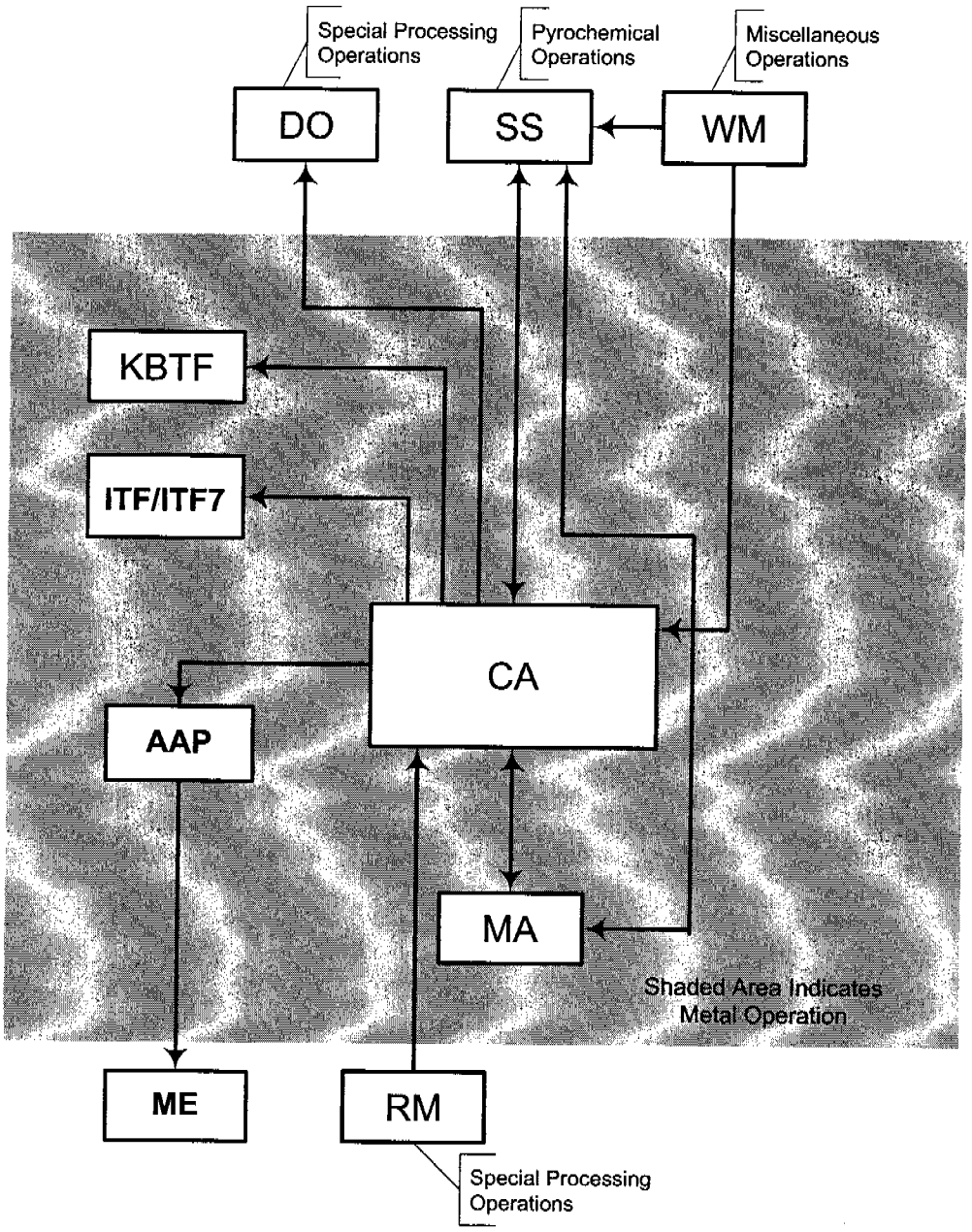

NOTE: All of these P/S codes may obtain feed material from or send product output to the vault.

SIMPLIFIED FLOW DIAGRAM FOR MISCELLANEOUS OPERATIONS (LEGACY)

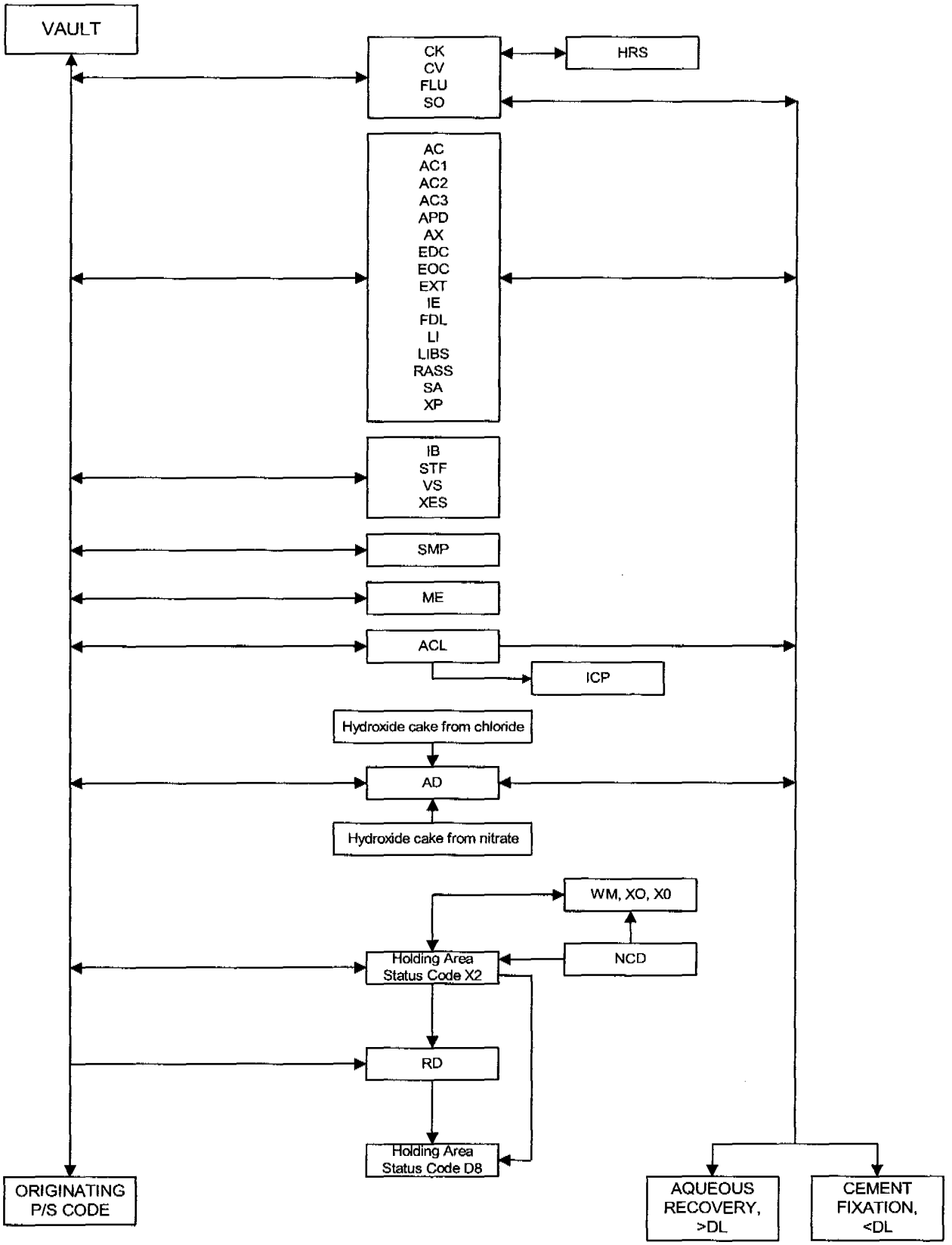

SIMPLIFIED FLOW DIAGRAM FOR MISCELLANEOUS OPERATIONS (NEWLY GENERATED)

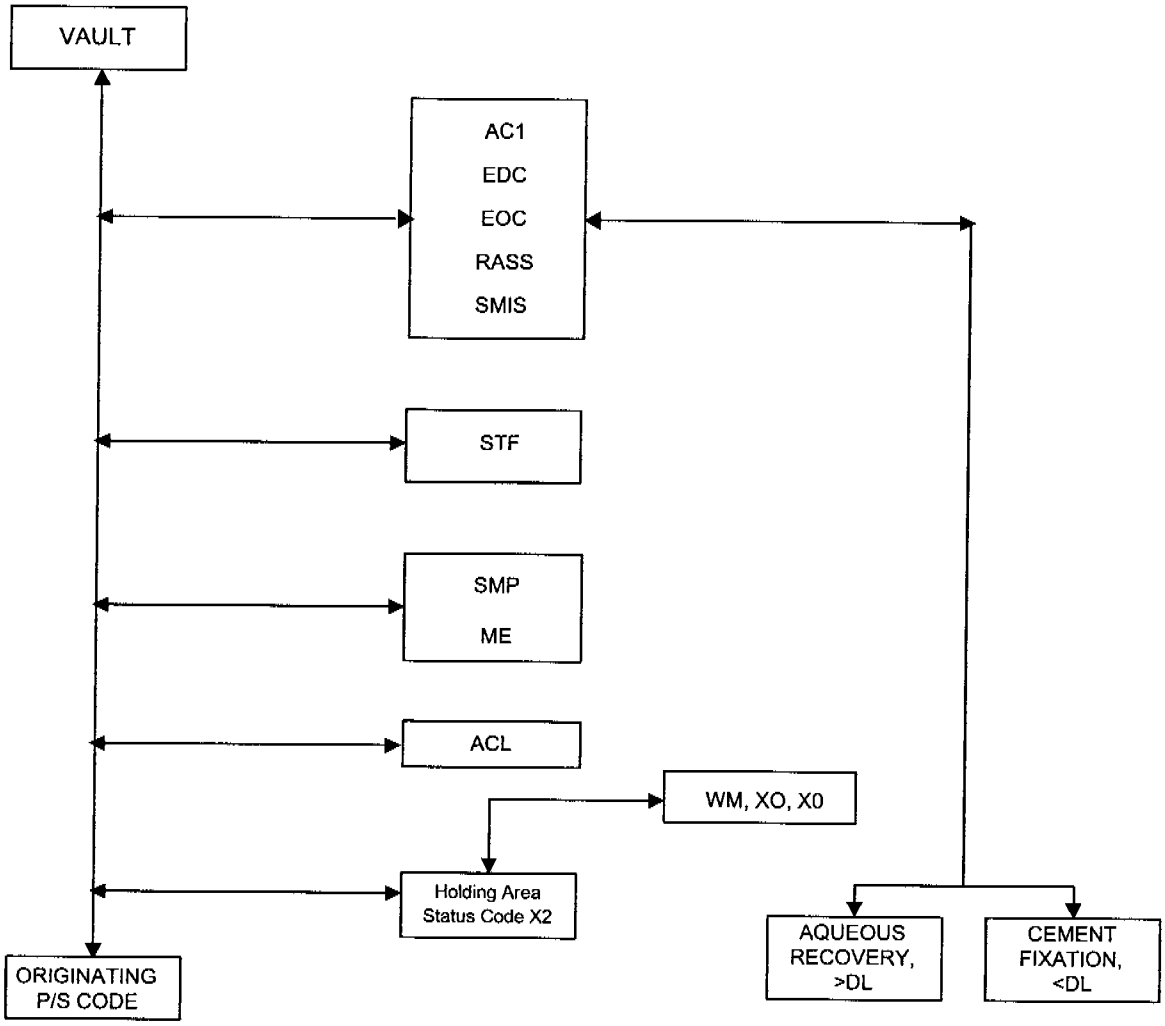

GENERALIZED PROCESS STATUS DIAGRAM FOR NITRATE PROCESSES (LEGACY)

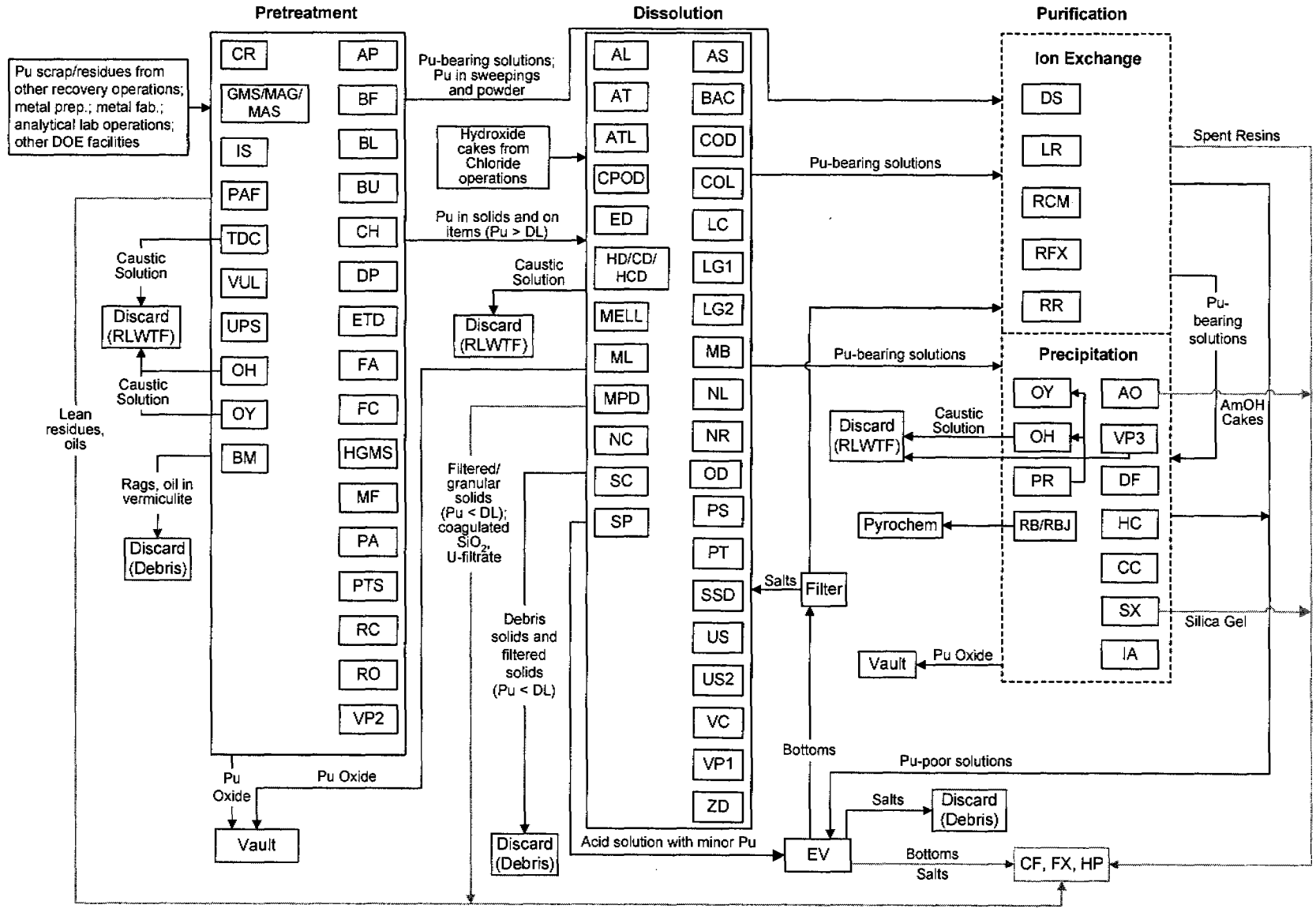

GENERALIZED DIAGRAM FOR NITRATE OPERATIONS (NEWLY GENERATED)

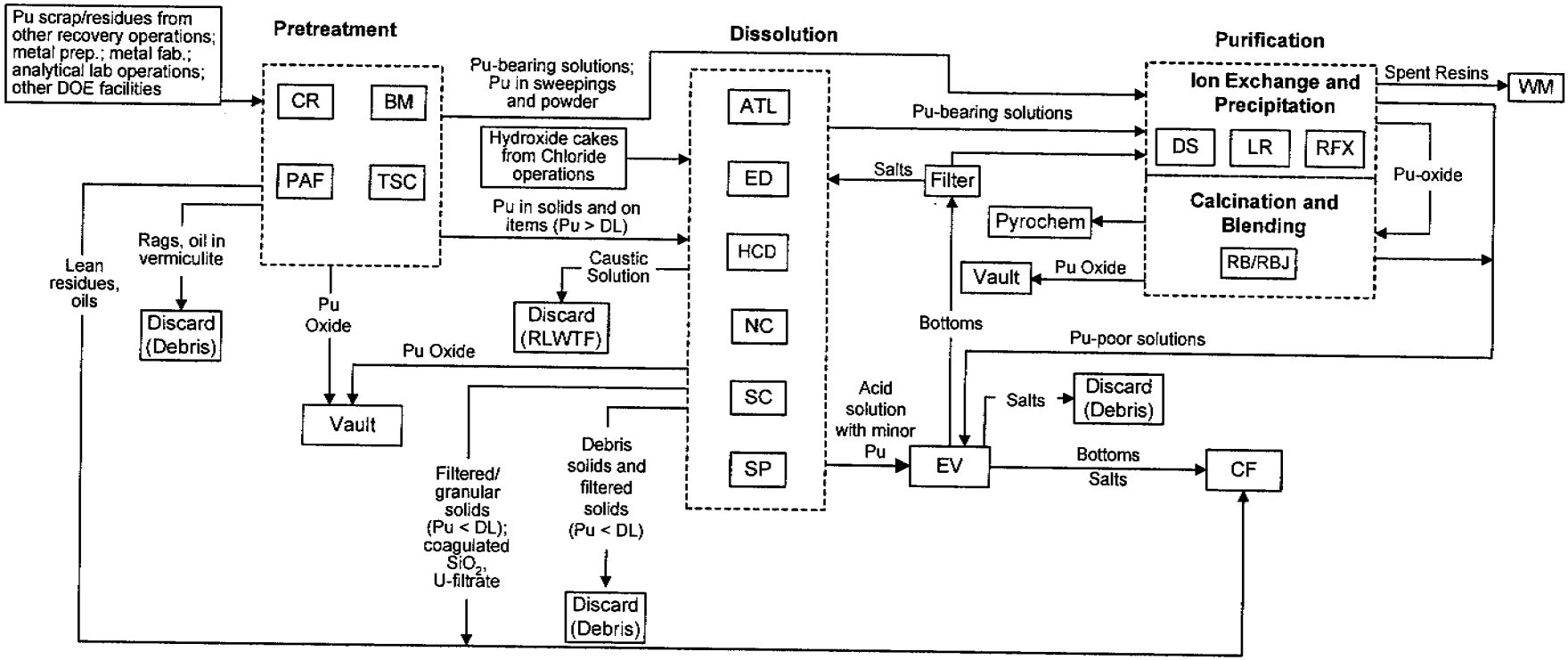

**SIMPLIFIED PROCESS FLOW DIAGRAM
FOR PYROCHEMICAL PROCESSES
(LEGACY)**

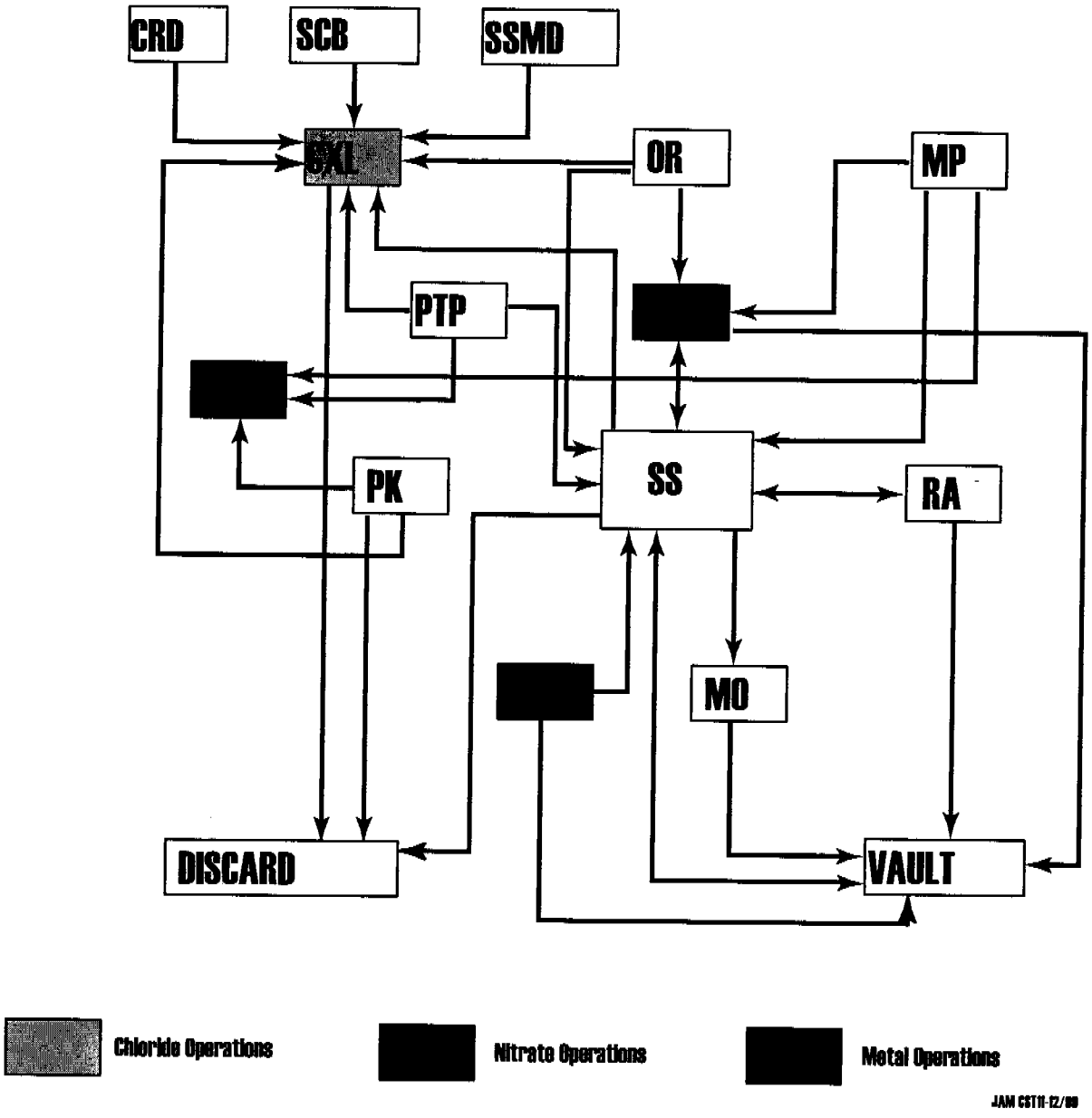

SIMPLIFIED FLOW DIAGRAM FOR PYROCHEMICAL OPERATIONS (NEWLY GENERATED)

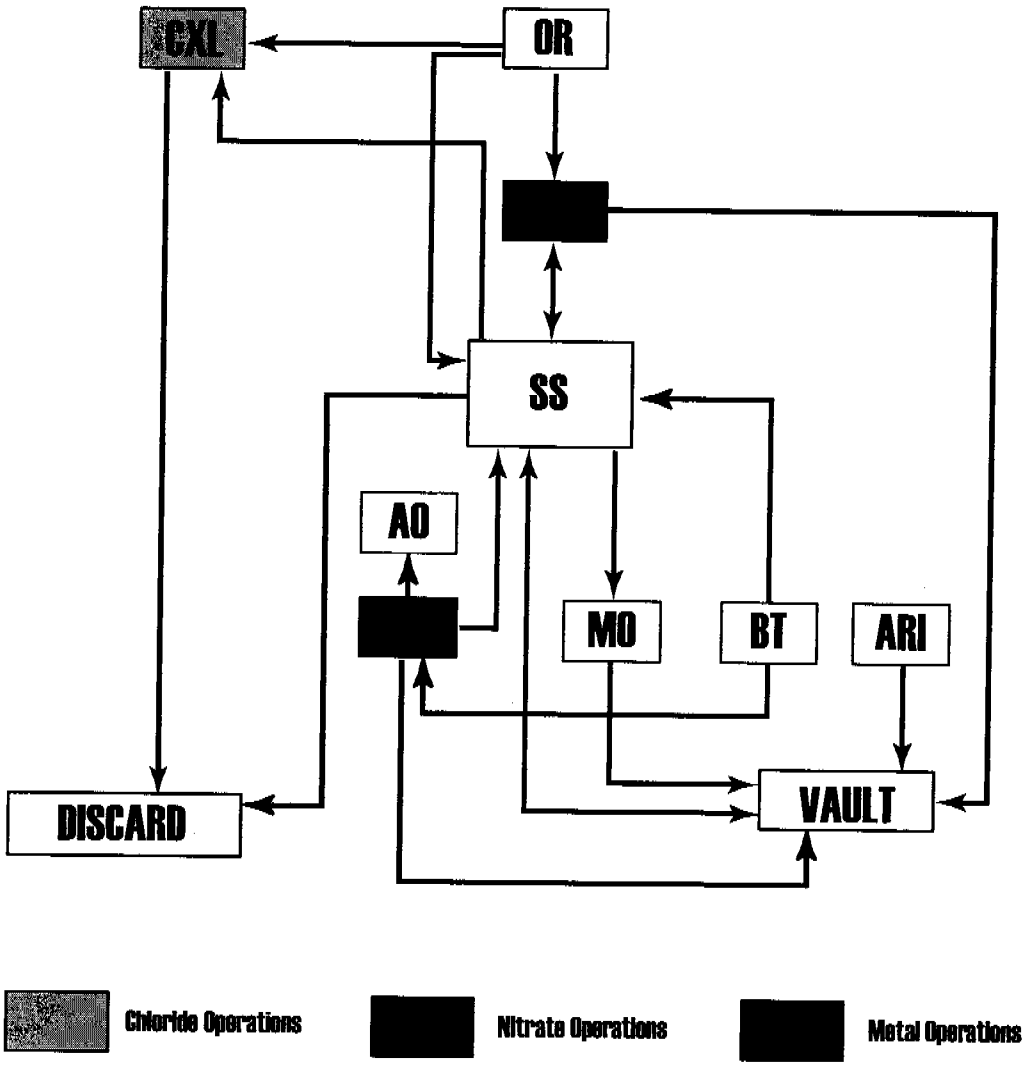

SIMPLIFIED PROCESS FLOW DIAGRAM

FOR SPECIAL PROCESSING (LEGACY)

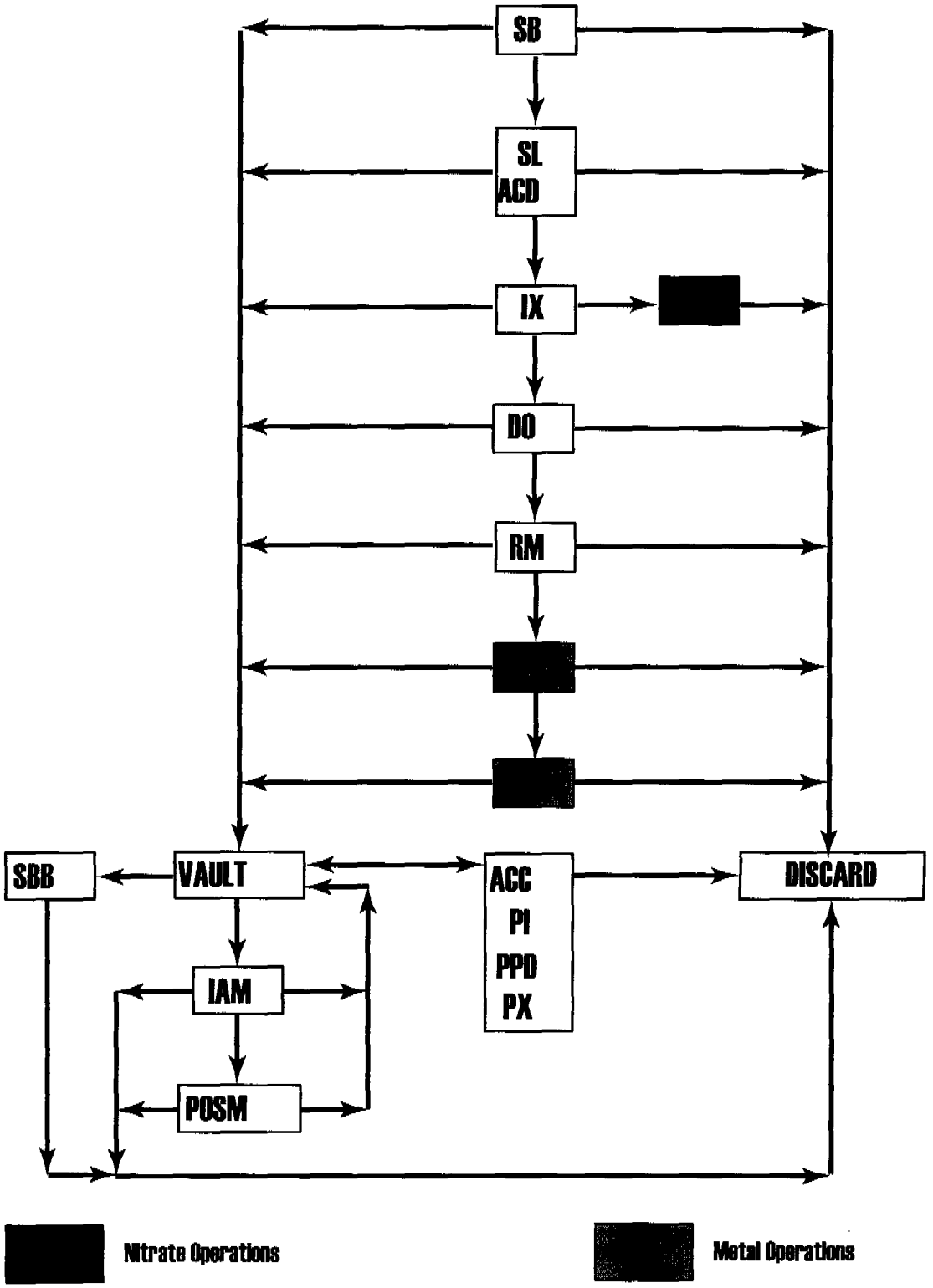

JAM CST11-2/08

SIMPLIFIED FLOW DIAGRAM FOR SPECIAL OPERATIONS (NEWLY GENERATED)

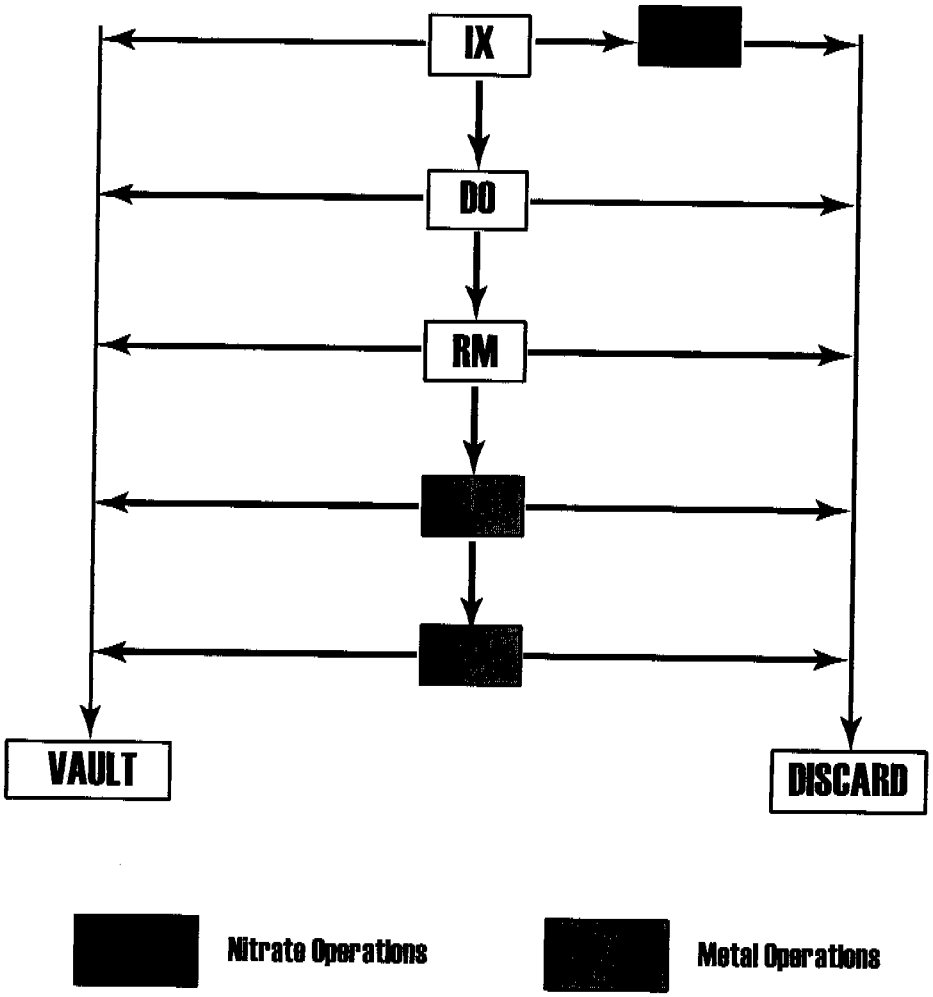

EXAMPLE WASTE GENERATOR FORMS

Los Alamos
NATIONAL LABORATORY

TRU WASTE STORAGE RECORD

LA00000057745

1. GENERATOR'S PRE-USE VISUAL INSPECTION

Purchase Order # 2328415	Inspected Items		
This container has been visually inspected according to approved procedures and has been found to be free of damage that would make it unsuitable for TRU waste packaging.	[X] Ring, Bolt, and Nut	[X] Chime	[X] Dents
	[X] Lid and Gasket	[X] Gouges	[X] Paint
Name	Znumber 091564		Date NOV 23 1998

2. GENERATOR'S PACKAGE INFORMATION

Group NMT-7	Technical Area 55	Building PF-4	Program Code 8J0700 KG19 2000 1000	[ ] Off-Normal
Additional Information TID				

CONTAINER	LINER
[X] Steel Drum (*55 gal.*)	[X] None
[ ] Steel Drum (*85 gal.*)	[ ] 90 mil liner
[ ] Standard Waste Box	[ ] 125 mil liner
[ ] RH Canister	INTERNAL SHIELDING
[ ] Other (*Call TWCO*)	[X] None
[ ] Overpack	Type / Thickness (*in.*)
Carbon Filter ID 01 2080 / 02	

RADIONUCLIDE CONTENT			
Nuclide	Amount	Uncertainty	C = Curie M = Gram
PU-238	4.040E-3	1.867E-4	M
PU-239	3.788E+1	1.751E+0	M
PU-240	2.424E+0	1.120E-1	M
PU-241	8.079E-2	3.734E-3	M
PU-242	8.079E-3	3.734E-4	M
AM-241	6.423E-2	2.989E-3	M

Waste Profile Request Number	20283
Process Batch Code	NA
Gross Weight (*lb.*)	2.21E+2
Net Weight (*lb.*)	1.60E+2
Shipping Category	2001700110
LANL Waste Stream ID	TA-55-5
TRUCON Code	117C
Date Closed (*MMDDYY*)	DEC 2 1998

[ ] PDP Program Tracking No:

NONRADIOACTIVE HAZARDOUS MATERIALS		
Name	EPA Code	Quantity (*g*)
None		

Accumulation Start Date (*MMDDYY*)

The data in this section were collected, and the waste described herein was packaged and labeled according to approved procedures.

Name WULFF DENNIS R | Znumber 093089 | Date DEC 8 1998

3. GENERATOR SITE HEALTH PHYSICS INFORMATION

		Survey Date	Survey Meter Model	Property	Calibration Void Date
Gamma Dose Rate (*mrem/h*) (contact)	4.2E+0	DEC 8 1998	RO20	006469	APR 14 1999
Neutron Dose Rate (*mrem/h*) (contact)	5.0E-1	DEC 8 1998	PNR-4	004904	APR 28 1999
Total Dose Rate (*mrem/h*) (contact)	4.7E+0				
Total Dose Rate (*mrem/h*) (1 meter)	2.0E-1				
Alpha Contamination (*dpm/100cm*^{2}) (*rem*)	0.0E+0				
Beta-Gamma Cont. (*dpm/100cm*^{2}) (*rem*)	0.0E+0				

The data in this section were collected according to approved procedures.

Name

Znumber 116142 | Date DEC 8 1998

Form 1562E (7/97) Printed FEB 12 99 11:04:08 by Page 1 of 2

Modifications to Computer Generated Data Invalidate this Form

Los Alamos
NATIONAL LABORATORY

DISCARDABLE WASTE LOG SHEET

LA00000057745

Item ID	Matrix	Pkg Wt (kg)	Qty	Volume (l)	MT	SNM(g)	Uncert(g)	Pg/Section/Ln OR Memo
METBM32	Metal (Non-Pu Scrap)	8.49			52	10.697	1.558	8/14
METEOC2	Metal (Non-Pu Scrap)	3.18			52	0.760	0.480	8/14
METFF32	Metal (Non-Pu Scrap)	10.28			52	0.775	0.423	8/14
METOM1	Metal (Non-Pu Scrap)	5.05			52	0.635	0.329	8/14
METTIGR1	Metal (Non-Pu Scrap)	23.42			52	1.035	0.290	8/14
METXO48	Metal (Non-Pu Scrap)	20.94			52	21.226	0.725	8/14
XBLSS44	MgO Crucible (Chloride)	0.59			52	1.901	0.026	8/21
XBLSS45	MgO Crucible (Chloride)	0.64			52	3.366	0.033	8/21

Total Pkg Wt (lbs)	160.03
Drum Tare (lbs)	60.96
Calc Gross Wt (lbs)	220.99
Meas Gross Wt (lbs)	221.08

MT	Total SNM	Total Uncert
52	40.395000	3.784000

Printed FEB 12 99 11:04:07 by BUSTAMANTE LM

TRU Waste Origination & Disposition Information

Itemid	Matrix					Date
METBM32	Metal (Non-Pu Scrap)					NOV 19 1998
Quantity	Gross Wt (kg) 7.50	Tare Wt	Net Wt (kg) 7.50	Volume (l)		Process Status BM
Generator				Znumber 086205	Room 208	Phone 7-2547
Waste Process Solid Waste Processing		Assay NDA Laboratory		Combined into		Drumid LA00000057745

Beryllium	NO	Explosives	NO	PCB's	NO
Compressed Gases	NO	Free Liquids	NO	Particulates	NO
Corrosive	NO	Hazardous	NO	Pyrophorics	NO

Comments
bagout filter#249

Assay Information

Isotope	MT	SNM (g)	Uncert (g)	Mcode	Limit	SNM (g)/unit	Date	By
PU-239	52	10.697000	1.558000	N02	3.31	1.426	NOV 24 1998	

Justification Memos

Memo ID
NONE

Hazardous Materials

EPA Code	Material	Wt (g)
NONE		

History

Date	Name	Event	Comments
NOV 19 1998		CERTIFIED	
NOV 24 1998		PACKED	LA00000057745
NOV 24 1998		CERTIFIED	added bagout filter #

TRU Waste Origination & Disposition Information

Itemid	Matrix					Date
METEOC2	Metal (Non-Pu Scrap)					NOV 23 1998
Quantity / Gross Wt (kg)	Tare Wt	Net Wt (kg)	Volume (l)			Process Status
2.80		2.80				EOC
Generator			Zaumber	Room		Phone
			082196	208		7-2547
Waste Process	Assay		Combined info		Drumid	
Solid Waste Processing	NDA Laboratory				LA00000057745	

Beryllium	NO	Explosives	NO	PCB's	NO
Compressed Gases	NO	Free Liquids	NO	Particulates	NO
Corrosive	NO	Hazardous	NO	Pyrophorics	NO

Comments
scrap metal Filter 497

Assay Information

Isotope	MT	SNM (g)	Uncert (g)	Mcode	Limit	SNM (g)/unit	Date	By
PU-239	52	0.760000	0.400000	N02	3.31	0.271	NOV 30 1998	

Justification Memos

Memo ID
NONE

Hazardous Materials

EPA Code	Material	Wt (g)
NONE		

History

Date	Name	Event	Comments
NOV 23 1998		CERTIFIED	
DEC 1 1998		PACKED LA00000057745	
DEC 1 1998		CERTIFIED add fil	

TRU Waste Origination & Disposition Information

Itemid	Matrix					Date
METFF32	Metal (Non-Pu Scrap)					NOV 25 1998
Quantity	Gross Wt (kg)	Tare Wt	Net Wt (kg)	Volume (l)		Process Status
	9.49		9.49			FF
Generator				Znumber	Room	Phone
				083191	128	7-2587
Waste Process		Assay		Combined into		Drumid
Solid Waste Processing		NDA Laboratory				LA00000057745

Beryllium	NO	Explosives	NO	PCB's	NO
Compressed Gases	NO	Free Liquids	NO	Particulates	NO
Corrosive	NO	Hazardous	NO	Pyrophorics	NO

Comments
hepa spacers and drill motor other scrap bagout filter#228

Assay Information

Isotope	MT	SNM (g)	Uncert (g)	Mcode	Limit	SNM (g)/unit	Date	By
PU-239	52	0.775000	0.423000	N02	3.31	0.082	DEC 1 1998	

Justification Memos

Memo ID
NONE

Hazardous Materials

EPA Code	Material	Wt (g)
NONE		

History

Date	Name	Event	Comments
NOV 25 1998		CERTIFIED	
DEC 1 1998		CERTIFIED	
DEC 2 1998		PACKED	LA00000057745
DEC 2 1998		CERTIFIED	added bagout filter

TRU Waste Origination & Disposition Information

Itemid	Matrix				Date
METOM1	Metal (Non-Pu Scrap)				NOV 23 1998
Quantity / Gross Wt (kg)	Tare Wt	Net Wt (kg)	Volume (l)		Process Status
4.64		4.64			OM
Generator			Znumber	Room	Phone
			106652	126	7-2370
Waste Process	Assay		Combined into		Drumid
Solid Waste Processing	NDA Laboratory				LA00000057745

Beryllium	NO	Explosives	NO	PCB's	NO
Compressed Gases	NO	Free Liquids	NO	Particulates	NO
Corrosive	NO	Hazardous	NO	Pyrophorics	NO

Comments
balance parts bagout filter#318

Assay Information

Isotope	MT	SNM (g)	Uncert (g)	Mcode	Limit	SNM (g)/unit	Date	By
PU-239	52	0.635000	0.329000	N02	3.31	0.137	DEC 1 1998	

Justification Memos

Memo ID
NONE

Hazardous Materials

EPA Code	Material	Wt (g)
NONE		

History

Date	Name	Event	Comments
NOV 23 1998		CERTIFIED	
DEC 2 1998		PACKED	LA00000057745
DEC 2 1998		CERTIFIED	added bagout filter #

TRU Waste Origination & Disposition Information

Itemid	Matrix				Date
METTIGR1	Metal (Non-Pu Scrap)				NOV 17 1998
Quantity / Gross Wt (kg)	Tare Wt	Net Wt (kg)	Volume (l)		Process Status
20.59		20.59			TIGR
Generator			Znumber	Room	Phone
			115490	114	5-6161
Waste Process	Assay		Combined into		Drumid
Solid Waste Processing	NDA Laboratory				LA00000057745

Beryllium	NO	Explosives	NO	PCB's	NO
Compressed Gases	NO	Free Liquids	NO	Particulates	NO
Corrosive	NO	Hazardous	NO	Pyrophorics	NO

Comments
copper tubing and furnace parts filter 230,234

Assay Information

Isotope	MT	SNM (g)	Uncert (g)	Mcode	Limit	SNM (g)/unit	Date	By
PU-239	52	1.035000	0.290000	N02	3.31	0.050	NOV 23 1998	

Justification Memos

Memo ID
NONE

Hazardous Materials

EPA Code	Material	Wt (g)
NONE		

History

Date	Name	Event	Comments
NOV 17 1998		CERTIFIED	
NOV 23 1998		PACKED	LA00000057745
NOV 23 1998		CERTIFIED	add filter

TRU Waste Origination & Disposition Information

Itemid	Matrix					Date
METXO48	Metal (Non-Pu Scrap)					NOV 17 1998
Quantity	Gross Wt (kg)	Tare Wt	Net Wt (kg)	Volume (l)		Process Status
	20.04		20.04			XO
Generator				Znumber	Room	Phone
				110326	401	7-2572
Waste Process		Assay		Combined into		Drumid
Solid Waste Processing		NDA Laboratory				LA00000057745

Beryllium	NO	Explosives	NO	PCB's	NO
Compressed Gases	NO	Free Liquids	NO	Particulates	NO
Corrosive	NO	Hazardous	NO	Pyrophorics	NO

Comments
parts from furnaces, motors, pumps bagout filter #90,167

Assay Information

Isotope	MT	SNM (g)	Uncert (g)	Mcode	Limit	SNM (g)/unit	Date	By
PU-239	52	21.226000	0.725000	N02	3.31	1.059	NOV 30 1998	

Justification Memos

Memo ID
NONE

Hazardous Materials

EPA Code	Material	Wt (g)
NONE		

History

Date	Name	Event	Comments
NOV 18 1998		CERTIFIED	
DEC 2 1998		PACKED	LA00000057745
DEC 2 1998		CERTIFIED	
DEC 2 1998		CERTIFIED	updated gross wt

TRU Waste Origination & Disposition Information

Itemid	Matrix					Date
XBLSS44	MgO Crucible (Chloride)					JUN 3 1998
Quantity	Gross Wt (kg) 0.39	Tare Wt 0.07	Net Wt (kg) 0.32	Volume (l)		Process Status SS
Generator				Znumber 084546	Room 429	Phone 7-2577
Waste Process Solid Waste Processing		Assay NDA Laboratory		Combined into	Drumid LA00000057745	

Beryllium	NO	Explosives	NO	PCB's	NO
Compressed Gases	NO	Free Liquids	NO	Particulates	NO
Corrosive	NO	Hazardous	NO	Pyrophorics	NO

Comments
changed Id. to be able to discard, caxbl1035 No filter #s legacy item

Assay Information

Isotope	MT	SNM (g)	Uncert (g)	Mcode	Limit	SNM (g)/unit	Date	By
PU-239	52	1.901000	0.026000	PAN1	8.30	5.941	JUN 9 1998	

Justification Memos

Memo ID
NONE

Hazardous Materials

EPA Code	Material	Wt (g)
NONE		

History

Date	Name	Event		Comments
JUN 9 1998		CERTIFIED		
JUN 9 1998		PACKED	LA00000056889	
JUN 9 1998		CERTIFIED		
SEP 29 1998		UNPACKED	LA00000056889	
SEP 29 1998		CERTIFIED		
SEP 29 1998		PACKED	LA00000056889	
SEP 29 1998		CERTIFIED	cert	
NOV 24 1998		UNPACKED	LA00000056889	
NOV 24 1998		PACKED	LA00000057745	

TRU Waste Origination & Disposition Information

Itemid	Matrix					Date
XBLSS45	MgO Crucible (Chloride)					JUN 3 1998
Quantity	Gross Wt (kg) 0.55	Tare Wt 0.05	Net Wt (kg) 0.50	Volume (l)		Process Status SS
Generator				Znumber 084546	Room 429	Phone 7-2577
Waste Process Solid Waste Processing		Assay NDA Laboratory		Combined into		DrumId LA00000057745

Beryllium	NO	Explosives	NO	PCB's	NO
Compressed Gases	NO	Free Liquids	NO	Particulates	NO
Corrosive	NO	Hazardous	NO	Pyrophorics	NO

Comments
changed id to be able to discard, caxbl17-98 No filter #s legacy item

Assay Information

Isotope	MT	SNM (g)	Uncert (g)	Mcode	Limit	SNM (g)/unit	Date	By
PU-239	52	3.366000	0.033000	PAN1	8.30	6.732	JUN 1 1998	

Justification Memos

Memo ID
NONE

Hazardous Materials

EPA Code	Material	Wt (g)
NONE		

History

Date	Name	Event		Comments
JUN 9 1998		CERTIFIED		
JUN 9 1998		PACKED	LA00000056889	
JUN 9 1998		CERTIFIED		
SEP 29 1998		UNPACKED	LA00000056889	
SEP 29 1998		PACKED	LA00000056889	
SEP 29 1998		UNPACKED	LA00000056889	
SEP 29 1998		CERTIFIED		
SEP 29 1998		PACKED	LA00000056889	
SEP 29 1998		CERTIFIED	cert	
NOV 24 1998		UNPACKED	LA00000056889	
NOV 24 1998		PACKED	LA00000057745	

EXAMPLE WASTE GENERATOR FORMS FOR TRU WASTE

Data Packages

Choose Drum | LA00000059359 | Notes

Approvals | Drum Info | Item Listing | Print Info

Item ID	Pkg Wt	Qty	Volume	Packager	Electronic Package Date
COMITF7	0.82 KG	0.00	0.00	SANCHEZ JUDY J	NOV 5 2001
PLSCA18	7.12 KG	0.00	0.00	GALLEGOS MICHAEL	NOV 15 2001
PLSITF8	5.38 KG	0.00	0.00	SANCHEZ JUDY J	NOV 5 2001
PLSRB4	8.17 KG	0.00	0.00	GALLEGOS MICHAEL	DEC 10 2001
PLSRBJ7	5.85 KG	0.00	0.00	SANCHEZ JUDY J	NOV 19 2001
RUBCA10	3.48 KG	0.00	0.00	GALLEGOS MICHAEL	NOV 15 2001

COMITF7

MT	Isotope	SNM(g)	Uncert(g)	Pg/Lb	Memo
52	PU-239	0.407	0.071	1/21	

COMITF7

Hazardous Materials	Wt(g)
None	0.000

Total Pkg Wt (lb)	Container Tare (lb)	Calc Gross Wt (lb)	Meas Gross Wt (lb)	SNM	Uncert
67.95	60.880	128.826	128.840	23.76	2.55

Cancel | OK | Close

Waste Origination and Disposition Form (PUNJAK WAYNE A)

Matrix*: Combustible waste

Item ID: COMITF7

WM Tech/Generator (last first middle): MONTOYA JOHNNY M (092424)

Date: OCT 31 2001

Contact: ()

Cost Center: CJ18 | Program Code: J22R | Cost Account: 0000 | Work Package: 0000

Item Source: DP / Non-DP

Measurement Information

Quantity	Gross	Tare	Net	Volume	PS
0.00	0.55	0.00	0.55	0.00	ITF

Location: Phone 7-8465 | Room 201E

Comments: sandpaper, cheesecloth, Filtered

Prohibited/Special Materials
- [ ] Beryllium
- [ ] Compressed gases
- [ ] Corrosive
- [ ] Explosives
- [ ] Free liquids
- [ ] Hazardous
- [ ] PCB's
- [ ] Particulates
- [ ] Pyrophorics
- [ ] > 4 liters sealed
- [x] None

Processing: (o) Cement / (•) Solid

Shielding: (•) No / (o) Yes

Assay Information
- [x] NDA Laboratory Assay
- [ ] Large Item

Measurement: GAMMA

Isotopes... | Verify... | Non-Waste

Hazardous... | Memos... | Assay... | UnVerify | History... | Close

*Unclassified material only

Waste Origination and Disposition Form (PUNJAK WAYNE A)

Matrix*: SNM embedded plastic

Item ID: PLSCA18

WM Tech/Generator (last first middle): RODRIGUEZ FLOYD (0056655)

Date: NOV 8 2001

Contact: ()

Cost Center: BJ05

Program Code: KT18

Cost Account: 1000

Work Package: 0019

Item Source: DP / Non-DP

Measurement Information

Quantity	Gross	Tare	Net	Volume	RS
8.00	6.24	0.00	6.24	8.00	CA

Location

Phone	Room
7-2372	329

Comments: brushes, plastics, plastic box, bottle plastic, and plastic glove rings

Prohibited/Special Materials

- [ ] Beryllium
- [ ] Compressed gases
- [ ] Corrosive
- [ ] Explosives
- [ ] Free liquids
- [ ] Hazardous
- [ ] PCB's
- [ ] Particulates
- [ ] Pyrophorics
- [ ] > 4 liters sealed
- [x] None

Processing: Cement / Solid

Shielding: No / Yes

Assay Information

- [x] NDA Laboratory Assay
- [ ] Large Item

Measurement: GAMMA

Isotopes... | Verify... | Non-Waste

Hazardous... | Memos... | Assay... | UnVerify | History... | Close

*Unclassified material only

Waste Origination and Disposition Form (PUNJAK WAYNE A)

Matrix*: SNM embedded plastic

Item ID: PLSITF8

WM Tech/Generator (last first middle): MONTOYA JOHNNY M (092424)

Date: OCT 31 2001

Contact: ()

Cost Center: 0J18 | Program Code: J22K | Cost Account: 0000 | Work Package: 0000

Item Source: DP / Non-DP

Measurement Information

Quantity	Gross	Tare	Net	Volume	PS
0.00	5.06	0.00	5.06	0.00	ITF

Location: Phone 7-6485 | Room 201E

Comments: plastic in metal can crossed taped. 1 can larger than 4 lit. crossed taped. filterd babout bag

Prohibited/Special Materials: Beryllium; Compressed gases; Corrosive; Explosives; Free liquids; Hazardous; PCB's; Particulates; Pyrophorics; > 4 liters sealed; None

Processing: Cement / Solid

Shielding: No / Yes

Assay Information: NDA Laboratory Assay; Large Item; Measurement: GAMMA

Isotopes... | Verify... | Non-Waste

Hazardous... | Memos... | Assay... | UnVerify | History... | Close

*Unclassified material only

Waste Origination and Disposition Form (PUNJAK WAYNE A)

Matrix*: SNM embedded plastic

Item ID: PLSRB4

WM Tech/Generator (last first middle): STEVENS BARBARA (080905)

Date: DEC 5 2001

Contact: ()

Cost Center: BJ02 | Program Code: M26N | Cost Account: 0000 | Work Package: 0000

Item Source: DP / Non-DP

Measurement Information

Quantity	Gross	Tare	Net	Volume	PS
0.00	6.39	0.00	6.39	0.00	RB

Location

Phone	Room
7-2547	208

Comments

Prohibited/Special Materials
- [ ] Beryllium
- [ ] Compressed gases
- [ ] Corrosive
- [ ] Explosives
- [ ] Free liquids
- [ ] Hazardous
- [ ] PCB's
- [ ] Particulates
- [ ] Pyrophorics
- [ ] > 4 liters sealed
- [x] None

Processing: Cement / Solid

Shielding: No / Yes

Assay Information
- [x] NDA Laboratory Assay
- [ ] Large Item

Measurement: GAMMA

Isotopes... | Verify... | Non-Waste

Hazardous... | Memos... | Assay... | VisVerify | History... | Close

*Unclassified material only

Waste Origination and Disposition Form (PUNJAK WAYNE A)

Matrix*: SNM embedded plastic

Item ID: PLSRBJ7 | WM Tech/Generator (last first middle): ROMERO JOE C (109702) | Date: SEP 4 2001

Contact: ()

Cost Center: BJ02 | Program Code: KR21 | Cost Account: 0000 | Work Package: 0000

Item Source: DP / Non-DP

Measurement Information

Quantity	Gross	Tare	Net	Volume	RS
0.00	5.05	0.00	5.05	0.00	RBJ

Location: Phone: 7-2547 | Room: 208

Comments: plexiglass,plastic inner bag slit, in a filter bagout bag

Prohibited/Special Materials
- [ ] Beryllium
- [ ] Compressed gases
- [ ] Corrosive
- [ ] Explosives
- [ ] Free liquids
- [ ] Hazardous
- [ ] PCB's
- [ ] Particulates
- [ ] Pyrophorics
- [ ] > 4 liters sealed
- [x] None

Processing: Cement / Solid

Shielding: No / Yes

Assay Information
- [x] NDA Laboratory Assay
- [ ] Large Item

Measurement: GAMMA

Isotopes... | Verify... | Non-Waste

Hazardous... | Memos... | Assay... | UnVerify | History... | Close

*Unclassified material only

Waste Origination and Disposition Form (PUNJAK WAYNE A)

Matrix*: Rubber waste

Item ID: RUBCA10

WM Tech/Generator (last first middle): RODRIGUEZ FLOYD (085655)

Date: NOV 8 2001

Contact: ()

Cost Center: 8J05

Program Code: KT16

Cost Account: 1000

Work Package: 0019

Item Source: DP / Non-DP

Measurement Information

Quantity	Gross	Tare	Net	Volume	PS
0.00	3.15	0.00	3.15	0.00	CA

Location

Phone	Room
7-2372	329

Comments: rubber waste in plastics. Plastics are puctured.

Prohibited/Special Materials

- [ ] Beryllium
- [ ] Compressed gases
- [ ] Corrosive
- [ ] Explosives
- [ ] Free liquids
- [ ] Hazardous
- [ ] PCB's
- [ ] Particulates
- [ ] Pyrophorics
- [ ] > 4 liters sealed
- [x] None

Processing: Cement / Solid

Shielding: No / Yes

Assay Information

- [x] NDA Laboratory Assay
- [ ] Large Item

Measurement: GAMMA

Isotopes... | Verify... | Non-Waste

Hazardous... | Memos... | Assay... | UnVerify | History... | Close

*Unclassified material only

HEALTH-SAFETY-ENVIRONMENT FORM

LOS ALAMOS SCIENTIFIC LABORATORY

DATE

CHEMICAL WASTE DISPOSAL REQUEST

REQUESTED BY _____ PHONE _____

GROUP _____ LOCATION: TA-_____ BLDG. _____ AREA/WING _____ ROOM _____

WASTE VOLUME (ft^3) _____

NUMBER OF CONTAINERS (SIZE/TYPE) _____

WASTE FORM (check as appropriate):

☐ SOLID ☐ LIQUID ☐ GAS

COMMON NAMES OF CHEMICALS: _____

POTENTIAL HAZARDS (check as appropriate):

CORROSIVES ☐ Acids _____strong _____mild _____weak

☐ Bases _____strong _____mild _____weak

☐ FLAMMABLE ☐ TOXIC ☐ OTHER:

☐ EXPLOSIVE ☐ CARCINOGEN

☐ PYROPHORIC ☐ INFECTIOUS

☐ OIL ☐ UNKNOWN

CAN MATERIALS REACT VIOLENTLY WHEN EXPOSED TO:

AIR _____ WATER _____ OTHER CHEMICALS _____

If yes, give details: _____

OTHER USEFUL INFORMATION: _____

(TO BE COMPLETED BY H-7)

DISPOSAL RECORD

AREA _____ PIT/SHAFT _____ DATE _____ BY _____

MAIL THIS FORM TO WASTE MANAGEMENT, H-7, MS-~~[illegible]~~ 514

6/80

HSAE 7-5A

DECISION/DISCREPANCY RESOLUTION DOCUMENTATION
Acceptable Knowledge Summary Report for
Debris TA-55 Waste Streams Containing Pu-239

Item Identification*	AK No. 1	Source No. 1	AK No. 2	Source No. 2	Decision/Discrepancy	Rationale**
General	On WPF, all RCRA codes were marked as possible	Waste Profile Forms	Summary reports do not list all codes for all processes	AK Summary Report, TWCP-AK-2.1-015, R.0		C- memo dated 03/07/02 from SME stated that none of those codes should be added because the constituents were not part of the process or would be introduced into the process. See attached memo
P/S codes CLS and CW	Organic solvents listed for analytical solutions include carbon tetrachloride and chloroform	TWCP-3547/ CL25	Summary report does not include these in Table 12	AK Summary Report, TWCP-AK-2.1-015, R.0	Discrepancy in lists of solvents.	C—In the AK summary report, the codes D019 and D022 are listed in the Table 13. Table 12 should be updated to reflect use of these solvents.
General	All TA-55 waste is defense	TWCP-614	Defense and non-defense were commingled until 8/21/97	TWCP-887	Reported the commingling process in the report	B
			Segregation began in 1997-1998	TWCP-4162	Reported the commingling process in the report	B
			Segregation began in 1998	TWCP-4167	Supporting memos attached to this record	C—memo dated 8/27/98 documented segregation had begun. TWCP-4167

Sandy Wonder — Tech. Reviewer — Sandy Wonder — 3/21/02
Evaluator (Print Name) — Title — Signature — Date

Pamela Rogers — Pamela Rogers — 3/21/02
SPM Review (Print Name) — Signature — Date

* Item identification can be PS Code, waste stream, drum ID, item ID, or other identification of items affected.
** Rationale code: [A=Professional Judgment; B=Most Conservative Decision; C=Other (specify)]

DECISION/DISCREPANCY RESOLUTION TABLE

Item Identification*	AK No. 1	Source No. 1	NDA Results	Decision/Discrepancy	Rationale**
52077	Drum contains MT-42.	Generator records.	FRAM indicates that drum contains mixed material types.	Used NDA data to determine total Pu content of drum.	B – Use of the FRAM "by correlation" data in conjunction with HENC or CTEN ensures the most conservative estimate of total Pu content.
52930	Drum contains MT-42.	Generator records.	FRAM indicates that drum contains mixed material types.	Used NDA data to determine total Pu content of drum.	B – Use of the FRAM "by correlation" data in conjunction with HENC or CTEN ensures the most conservative estimate of total Pu content.
56539	Drum contains MT-42.	Generator records.	FRAM indicates that drum contains mixed material types.	Used NDA data to determine total Pu content of drum.	B – Use of the FRAM "by correlation" data in conjunction with HENC or CTEN ensures the most conservative estimate of total Pu content.
56833	Drum contains MT-42.	Generator records.	FRAM indicates that drum contains mixed material types.	Used NDA data to determine total Pu content of drum.	B – Use of the FRAM "by correlation" data in conjunction with HENC or CTEN ensures the most conservative estimate of total Pu content.
S817519	Drum contains MT-42.	Generator records.	FRAM indicates that drum contains mixed material types.	Used NDA data to determine total Pu content of drum.	B – Use of the FRAM "by correlation" data in conjunction with HENC or CTEN ensures the most conservative estimate of total Pu content.
S818322	Drum contains MT-42.	Generator records.	FRAM indicates that drum contains mixed material types.	Used NDA data to determine total Pu content of drum.	B – Use of the FRAM "by correlation" data in conjunction with HENC or CTEN ensures the most conservative estimate of total Pu content.
S803105	Drum contains weapons grade Pu.	Generator records.	FRAM indicates that drum contains mixed material types.	Used NDA data to determine total Pu content of drum.	A – Due to the low total content of Pu and low error statistics, FRAM and HENC results are certifiable.
S811819	Drum contains weapons grade Pu.	Generator records.	FRAM indicates that drum contains mixed material types.	Used NDA data to determine total Pu content of drum.	A – Due to the low total content of Pu and low error statistics, FRAM and HENC results are certifiable.

Marc Taylor	SPM	Signature on File	8/23/02
Evaluator (Print Name)	Title	Signature	Date

Pam Rogers	Signature on File	8/23/02
SPM Review (Print Name)	Signature	Date

* Item identification can be PS Code, waste stream, operation, drum ID, Item ID, or other identification of items affected by discrepancy.
** Rationale code: (A = Professional Judgment; B = Most Conservative Decision; C = Other [specify])

DECISION/DISCREPANCY RESOLUTION TABLE

Acceptable Knowledge Report for Legacy Debris TA-55
Waste Streams Containing Pu-239

Item Identification*	AK No. 1	Source No. 1	AK No. 2	Source No. 2	Decision/Discrepancy	Rationale**
P/S codes WM, X0, AD, CV, HGMS, BC, PF, FF, ARI, LIBS, SRL	Actinium was not listed as a radionuclide	*Acceptable Knowledge Report for Debris TA-55 Waste Streams Containing Pu-239,* TWCP-AK-2.1-015, R.0	Actinium was found while undergoing NDA in several drums	TWCP-9499	Added Ac-227 to list of radionuclides in AK report	C-actual data
General	Waste containers assigned to a non-mixed waste stream	*Los Alamos National Laboratory Transuranic Waste Characterization Acceptable Knowledge Information Summary,* TWCP-PLAN-0.2.7-001	Some drums were found to contain lead shielding. Reassigned to a mixed waste stream	*Acceptable Knowledge Accuracy Report,* TWCP-AK-2.1-012,R.0	Revised AK reports	C-actual data
P/S code MA	1,1,1-trichloroethane not used as solvent	TWCP-AK-2.1-015,R.1, Table 10	HGAS analysis data showed 1,1,1-trichloro-ethane in very high concentra-tions	HGAS analysis	Add F002 because 1,1,1-trichloroethane may have been used as solvent prior to 1992	A

* Item identification can be PS Code, waste stream, operation, drum ID, Item ID, or other identification of items affected by discrepancy.
** Rationale code: (A = Professional Judgment; B = Most Conservative Decision; C = Other [specify])

Betty J. Humphrey	AK Investigator	Signature on File	08/23/02
Evaluator (Print Name)	Title	Signature	Date

Pam Rogers	Signature on File	08/23/02
SPM Review (Print Name)	Signature	Date

TA-55 PROCESS/STATUS CODE INDEX

P/S Code	P/S Name	Operations AK Report in which this P/S Code is Described*
AAP	Accelerated Aging of Plutonium	Metal Operations
AC	Actinide chemistry, R&D	Miscellaneous Operations
AC1	Actinide chemistry, R&D	Miscellaneous Operations
AC2	Actinide chemistry, R&D	Miscellaneous Operations
AC3	Actinide chemistry, R&D	Miscellaneous Operations
ACC	Ammonium chloride conversion	Special Processing Operations
ACD	Cascade dissolver	Special Processing Operations
ACL	Analytical chemistry laboratory	Miscellaneous Operations
AD	Actinide processing demonstration	Miscellaneous Operations
AL	Ash leach	Nitrate Operations
AO	Assembly operation	Metal Operations
AO	Americium processing calcination	Nitrate Operations
AP	Americium purification	Nitrate Operations
APD	Actinide processing demonstration	Miscellaneous Operations
ARI	ARIES	Metal Operations
AS	Anode heel dissolution	Nitrate Operations
AT	Ash testing	Nitrate Operations
ATL	Advanced test line for actinide separation RD&D	Nitrate Operations
AX	Solution assay	Miscellaneous Operations
BA	Basement isopress	Metal Operations
BAC	Bacterial decomposition of cellulose items	Nitrate Operations
BC	Physical properties	Metal Operations
BF	Unknown name for P/S code	Nitrate Operations
BL	Blending	Nitrate Operations
BM	Burning metal	Nitrate Operations
BT	Burst testing	Metal Operations
BU	Button burning	Nitrate Operations
CA	Casting	Metal Operations
CC	Calcination	Nitrate Operations

TA-55 PROCESS/STATUS CODE INDEX (continued)

P/S Code	P/S Name	Operations AK Report in which this P/S Code is Described*
CD	Hydroxide cake dissolution	Nitrate Operations
CF	Cement fixation	Nitrate Operations
CH	Characterization	Nitrate Operations
CK	RD&D volatile fluoride Pu recovery	Miscellaneous Operations
CL	Crucible processing	Chloride Operations
CLRD	Aqueous chloride R&D	Chloride Operations
CLS	Accountable CLS chloride solutions	Chloride Operations
CN	C-N-O analysis	Metal Operations
CO	Comminution	Metal Operations
COD	Chlorinated oxide dissolution	Nitrate Operations
COL	Chlorinated oxide leach	Nitrate Operations
CPOD	Catalyzed electrochemical plutonium oxide dissolver	Nitrate Operations
CR	Crushing and pulverizing	Nitrate Operations
CRD	Chlorination/reduction RD&D	Pyrochemical Operations
CS	Chloride solutions	Chloride Operations
CSE	Chloride solvent extraction	Chloride Operations
CT	Compatibility testing	Metal Operations
CV	RD&D experimental chlorination processes	Miscellaneous Operations
CW	Caustic waste	Chloride Operations
CX	Chloride anion exchange	Chloride Operations
CXL	Experimental chloride extraction line	Chloride Operations
DA	Alloy development Pu items	Metal Operations
DF	DS furnace and oxide preparation	Nitrate Operations
DO	Dissolution of oxide	Special Processing Operations
DOP	Detector oxide preparation	Metal Operations
DP	Dry processing	Nitrate Operations
DS	Ion exchange	Nitrate Operations
DT	John Ward R&D	Metal Operations
ED	Cascade dissolver	Nitrate Operations

TA-55 PROCESS/STATUS CODE INDEX (continued)

P/S Code	P/S Name	Operations AK Report in which this P/S Code is Described*
EDC	Electrolytic decontamination	Miscellaneous Operations
EL	Element loading	Metal Operations
ELW	Experimental laser welding	Metal Operations
EM	Electron microscopy	Metal Operations
EOC	Experimental oxide characterization	Miscellaneous Operations
ER	Electrorefining	Pyrochemical Operations
ETD	Experimental thermal decomposition	Nitrate Operations
EV	Evaporator	Nitrate Operations
EVAC	Evacuation and bake out	Metal Operations
EXT	Extraction RD&D	Miscellaneous Operations
FA	Americium processing	Nitrate Operations
FC	Canning	Nitrate Operations
FDL	FOOF demonstration loop	Miscellaneous Operations
FF	Fuel fabrication	Metal Operations
FLU	Fluorination RD&D	Miscellaneous Operations
FSPF	Special furnace operations	Metal Operations
FX	Cement to drum	Nitrate Operations
GI	Pellet grinding & inspection	Metal Operations
GMS	Open gradient magnetic separation	Nitrate Operations
HC	Calcination	Nitrate Operations
HCD	Hydroxide cake dissolution	Nitrate Operations
HD	Hydroxide cake dissolution	Nitrate Operations
HG	Pu removal by mercury	Metal Operations
HGMS	High gradient magnetic separation	Nitrate Operations
HP	Cement fixation	Nitrate Operations
HRA	Hanford Reservation Material	Nitrate Operations
HRS	High resolution spectroscopy	Miscellaneous Operations
IA	Impure americium holding for discard	Nitrate Operations
IAM	Inspection and measurement	Special Processing Operations

TA-55 PROCESS/STATUS CODE INDEX (continued)

P/S Code	P/S Name	Operations AK Report in which this P/S Code is Described*
IB	Matrix study of pyrochemical salts	Miscellaneous Operations
ICP	ICP-AES analysis	Miscellaneous Operations
ID	Immersion density	Metal Operations
IE	Isotope enrichment	Miscellaneous Operations
IN	Inspection	Metal Operations
IS	Incinerator	Nitrate Operations
ITF	Impact test facility	Metal Operations
ITF4	Impact test facility	Metal Operations
ITF7	Impact test facility	Metal Operations
IX	Ion exchange	Special Processing Operations
JA	Gas isostatic press	Metal Operations
KBTF	Kolsky bar test facility	Metal Operations
LC	Uranium plutonium processing	Nitrate Operations
LD	Chloride leach & dissolution	Chloride Operations
LG1	Non combustible leach	Nitrate Operations
LG2	Hydroxide cake dissolution	Nitrate Operations
LI	XF6 experimental measurements	Miscellaneous Operations
LIBS	Laser-induced breakdown spectroscopy system	Miscellaneous Operations
LR	Ion exchange	Nitrate Operations
M1, M2, MM, M4	Materials Management	Miscellaneous Operations
MA	Machining	Metal Operations
MAG	Magnetic separation	Nitrate Operations
MAS	RD&D experimental processes	Nitrate Operations
MB	Nitric dissolution of molten salts	Chloride Operations Nitrate Operations
MBC	Crystal	Metal Operations
ME	Metallography	Miscellaneous Operations
MELL	Mediated electro-oxidation of LLW	Nitrate Operations
MF	Metals furnace	Nitrate Operations
ML	Non-Pu metal leach	Nitrate Operations

TA-55 PROCESS/STATUS CODE INDEX (continued)

P/S Code	P/S Name	Operations AK Report in which this P/S Code is Described*
MO	Metal oxidation, room 429	Pyrochemical Operations
MOX	Mixed oxide fuel production	Metal Operations
MP	Metal preparation	Pyrochemical Operations
MPD	Cascade dissolver	Nitrate Operations
MS	Molten salts purification dissolution	Chloride Operations
MW	Metal working	Metal Operations
NC	Noncombustible leach	Nitrate Operations
NCD	Nonconfirming drums	Miscellaneous Operations
NEPTUNIUM	Neptunium	Pyrochemical Operations
NL	Noncombustible leach	Nitrate Operations
NR	Nitrate recovery	Nitrate Operations
OB	Oxide blending	Metal Operations
OD	Oxide dissolution	Nitrate Operations
OH	Hydroxide precipitation	Nitrate Operations
OM	Oxygen to metal ratio determination	Metal Operations
OR	Direct oxide reduction	Pyrochemical Operations
OY	Oxalate precipitation	Nitrate Operations
PA	Passivation	Nitrate Operations
PAF	Passivation furnaces	Nitrate Operations
PB	Pu-beryllium source recovery	Chloride Operations
PCH	Plasma chemistry	Metal Operations
PD	Pit disassembly	Metal Operations
PE	Sputtering process	Metal Operations
PF	Plutonium surfaces	Metal Operations
PH	Thermal hydride/dehydride	Metal Operations
PI	Preparation of isotopes	Special Processing Operations
PIG	Welding	Metal Operations
PK	Pickling and nitrate holding	Pyrochemical Operations
POSM	Processing out-of-specification material	Special Operations
PPD	Pu pellet dissolution	Special Operations

TA-55 PROCESS/STATUS CODE INDEX (continued)

P/S Code	P/S Name	Operations AK Report in which this P/S Code is Described*
PR	Peroxide precipitation	Nitrate Operations
PRR	Pyrochemical residue recovery	Chloride Operations
PS	Peroxide precipitation of MSE salts	Nitrate Operations
PT	Plutonium-thorium separation	Nitrate Operations
PTP	Plutonium trichloride preparation	Pyrochemical Operations
PTS	RD&D pretreatment study	Nitrate Operations
PUB	Pu/Be source recovery	Chloride Operations
PX	Pyrochemical R&D	Special Operations
RA	Recovery of anodes	Pyrochemical Operations
RAP	Research alloy preparation	Metal Operations
RAP2	Research alloy preparation	Metal Operations
RASS/RSS	Raman spectroscopy system	Miscellaneous Operations
RB	Roasting and blending	Nitrate Operations
RBJ	Roasting and blending Jr	Nitrate Operations
RC	Rotary calciner	Nitrate Operations
RCM	Rich column material ion exchange	Nitrate Operations
RD	Repackaging into retrievable drums	Miscellaneous Operations
RFX	Ion exchange	Nitrate Operations
RL	Radiochemical coating	Metal Operations
RM	Reduction to metal	Special Processing Operations
RO	Oil recovery	Nitrate Operations
RR	Ion exchange	Nitrate Operations
RS	Pellet sintering	Metal Operations
SA	Super acid RD&D	Miscellaneous Operations
SB	Scrap burning	Special Processing Operations
SBB	Ca/Al scrubbing RD&D	Special Processing Operations
SC	Cascade dissolver, G437	Nitrate Operations
SCB	Chlorination Ca/Al scrubbing RD&D	Pyrochemical Operations

TA-55 PROCESS/STATUS CODE INDEX (continued)

P/S Code	P/S Name	Operations AK Report in which this P/S Code is Described*
SD	Salt distillation	Pyrochemical Operations
SE	Solvent extraction	Chloride Operations
SL	Scrap leaching	Special Processing Operations
SMIS	Long-Term Storage/Compatability Testing	Miscellaneous Operations
SMP	SP mounting preparation	Miscellaneous Operations
SO	Super oxidizer, FOOF program	Miscellaneous Operations
SP	Scrap dissolution, G438	Nitrate Operations
SRL	Special recovery line	Metal Operations
SS	Salt stripping	Pyrochemical Operations
SSD	Special scrap dissolution	Nitrate Operations
SSMD	SS material development	Pyrochemical Operations
STF	Standard fabrication	Miscellaneous Operations
SX	Americium processing silicon removal	Nitrate Operations
TSC	Thermal stabilization of cellulosic material	Nitrate Operations
TDC	Thermal decomposition of cellulose items	Nitrate Operations
TIGR	Thermally induced gallium removal	Metal Operations
UA	Uranium fabrication	Metal Operations
UCONN	Metal conversion	Metal Operations
UPS	Uranium/plutonium separation	Nitrate Operations
US	Uranium separation for solid solution feed	Nitrate Operations
US2	Uranium separation for non-solid solutions feed	Nitrate Operations
VC	Variable CSMO scrap dissolution	Nitrate Operations
VD	Vapor degreaser and sand blasting	Metal Operations
VP1	CSMO scrap dissolution	Nitrate Operations
VP2	Polycube processing	Nitrate Operations
VP3	Hydroxide precipitation	Nitrate Operations
VS	Confirmation, inspection & sampling	Miscellaneous Operations

TA-55 PROCESS/STATUS CODE INDEX (continued)

P/S Code	P/S Name	Operations AK Report in which this P/S Code is Described*
VU	Vessel unloading	Special Processing Operations
VUL	Vessel unloading	Nitrate Operations
WE	Welding	Metal Operations
WLT	Welding leak test	Metal Operations
WM	Waste management	Miscellaneous Operations
X0	Inactive or unspecified P/S material	Miscellaneous Operations
XES	X-ray energy spectroscopy	Miscellaneous Operations
XO	Inactive or unspecified P/S material	Miscellaneous Operations
XP	RD&D experimental processes	Miscellaneous Operations
ZD	Scrap oxide dissolution	Nitrate Operations

* Operations AK reports: Chloride Operations (TWCP-AK-2.1-002, R.2), Metal Operation (TWCP-AK-2.1-003,R.2), Miscellaneous Operations (TWCP-AK-2.1-004,R.2/IC1), Nitrate Operations (TWCP-AK-2.1-005,R.2), Pyrochemical Operations (TWCP-AK-2.1-006,R.2), and Special Processing Operations (TWCP-AK-2.1-007, R.2) Timelines for each of the P/S codes can be found in these Operations AK reports.

TWCP/WRR
Document Modification/Review Cycle

☒ Revision
☐ Interim Change

Document ID: TWCP-AK-2.1-015 New Rev/IC: R.3

Preparer: Betty J. Humphrey

Document Title:
Acceptable Knowledge Report for Legacy Debris TA-55 Waste Streams Containing Pu-239

Blank entries are Not Applicable items.

- ☒ Procedure number verified
- ☒ Procedure Title verified
- ☒ Procedure Revision/IC verified
- ☒ Pagination verified
- ☒ Document Header verified
- ☒ Attachment Header verified
- ☐ Hazard Summary verified (if applicable)
- ☒ Effective/Review Date/LAUR# on cover page
- ☒ Copy of final to Training/Signature Copies
- ☒ Signatures and Dates typed on cover page
- ☒ Revision History table reflect changes and effective date
- ☐ Forms have been marked as SAMPLE, if applicable
- ☐ Forms extracted for Web publishing
- ☒ Electronic files archived
- ☒ Diskette Prepared for Document Control
- ☒ Document Control packet contains signed original, diskette, DRR/Redline, review documentation

Document Tracking Closed ○ Open ◉ Closed Date to DC: 4/10/2003 Signed Initials: JS

Step 8: Document Control - Tracking and Web Conversion

Date Received: 4/10/03

- ☑ Verify Signatures
- ☑ Verify Effective Date cover/history
- N/A Verify IC added to document (if applicable)
- ☑ Log into Database/Make Assignment
- ☑ Print Receipts/Cover sheets
- ☑ Copy document: 1
- ☑ Control Stations Updated - Date: 4/10/03
- ☑ Master Index Updated - Date: 4/10/03
- ☑ Archive old revision (Record)

- ☑ Capture Document: ✓ Word ✓ PDF
- ☑ Forms: __ Yes ✓ No
- ☑ Transfer to Web Server
- ☑ Quality check to Original
- ☑ Verify Signatures ✓ Signature Dates ✓
- ☑ Dates: ✓ Cover ✓ Rev. History ✓ Review Date
- ☑ Web Page TOC: ✓ No/Rev ✓ Effective Date ✓ LAUR ✓ Title ✓ Link ✓ Test
- ☑ On-line test: ✓ Open Doc
- ☑ Electronic Notification: ✓ Sent ✓ Printed
- N/A CBFO: __ Electronic Copy __ Printed
- ☑ Change Control Notification ____ Sent ____ Printed ✓ NA

Date Completed: 4/10/03 Signed Initials: JS

TWCP/WRR
Document Modification/Review Cycle

Step 1: Receipt of Document

Status: ○ Open ◉ Closed ☒ Revision ☐ Interim Change

Date Received: 4/10/2003

Current Rev/IC: R.2

Document ID: TWCP-AK-2.1-015

Rev/IC: R.3

Document Title:

Acceptable Knowledge Report for Legacy Debris TA-55 Waste Streams Containing Pu-239

Preparer: Betty J. Humphrey

Date to DP Team: 4/10/2003

Step 2: [illegible] Cycle

Technical Reviewer: (QA and Preparer)

Release for Review:

Comments:

04/09/03: Made requested changes and routed for signatures
04/10/10: Prepared document for transmittal to Document Control

Step 3: Preliminary Review Cycle

☐ IC - Not Applicable (enter action in comments section)

Reviewer	Name	Sent Out	Returned	Comments

X

Comments:

Step 4: Comment Reconciliation Cycle

☐ IC - Not Applicable (enter action in comments section)

TWCP/WRR
Document Modification/Review Cycle

Reviewer Comments Incorporated: ..... Comments:

Redline/DRR Given to Preparer: .....

Reconciled Comments Returned: .....

Modifications Made to Document: .....

Preparer Review of Modifications: .....

Signed/Release for Final Signature: .....

Step 5: Final Signature Cycle

☐ IC - Not Applicable (enter action in comments section)

Signature	Position	Sent Out	Returned	Comments
B. Humphrey		4/9/2003	4/9/2003	AK Investigator
S. Wander		4/9/2003	4/9/2003	Independent Technical Reviewer/Editor
C. Smith		4/9/2003	4/9/2003	Site Project Manager
P. Lindahl		4/9/2003	4/9/2003	Site Project QA Officer
W. Punjak		4/10/2003	4/10/2003	Facility Representative

Comments:

Step 6: External Review Cycle

Organization	Contact	Sent Out	Returned	Comments	
Change Control				NA	X
CBFO				NA	

Comments

Step 7: Preparation for Document Control

If pages are separated match to Document: TWCP-AK-2.1-015

X-Sender: 117375@eet-mail.lanl.gov
X-Mailer: QUALCOMM Windows Eudora Version 5.1
Date: Fri, 11 Apr 2003 09:10:35 -0600
To: pgp@lanl.gov
From: Cathy Smith <chsmith@lanl.gov>
Subject: Please Post TWCP-AK-2.1-015,R.3
X-RCPT-TO: <109592@eet-mail.lanl.gov>

HI Patricia,

Please post **TWCP-AK-2.1-015,R.3 on** the TWCP Documents Web page as soon as the signature page is completed.

Please also proceed with obtaining an LA-UR number for this document.

Thank-you!

Cheers, Cathy

Catherine H. Smith
Project 2010
RRES-CE Certification Group
Risk Reduction & Environmental Stewardship Division
Phone: 667-0113 Page: 664-7104

File

To: rubyannf@lanl.gov, mlgarcia@lanl.gov, carmen@lanl.gov,"Yvonne C. Gibson" <ygibson@lanl.gov>, betty.humphrey@westonsolutions.com
From: Patricia G Patton <pgp@lanl.gov>
Subject: Procedure Notification
Cc: bailey, lpc, lindahl, ware
Bcc:
Attached:

The following procedure and has been posted to the Project 2010 web, it is located at http://twcp.lanl.gov/twcp/con_toc.htm and will be effective on the date below

Effective Date: 4/10/03

TWCP-AK-2.1-015,R.3 - Acceptable Knowledge Report for Debris Waste Streams Containing Pu-239

*

LOS ALAMOS
NATIONAL LABORATORY - TWCP RMDC

Controlled Document Acknowledgment

Failure to return receipt by response date may result in removal from Distribution and/or placement on Supervised Work Activities for reciepients who are overseeing or performing work to this document.

Please Sign, Fold, and Return this Form

To: TWCP RMDC **Mail Stop: M 319** **Please Respond 4/24/2003** ____

TWCP-AK-2.1-015,R.3

Effective Date 4-10-2003 **Doc_Source** TWCP **Doc_Status** FINAL **Entry No**

Document Title ACCEPTABLE KNOWLEDGE REPORT FOR DEBRIS WASTE STREAMS CONTAINING Pu-239

Document Comments

Work Stations	ID_No	Name	MS	Organization	Copy
☒ RMDC ✓	N/A	?	?	?	
☐ WCRRF					
☐ RAMROD					
☐ RANT					
☐ DECON					
☐ QA					

Action Required:
Please sign receipt and return to **RMDC, M 319**. My Signature on this Form verifies that I have Received this Document.

___ Please remove me from the Controlled Distribution List. Since the contents of this document does not apply to our operation the document is being returned. (Not applicable for Controlled Stations)

To be signed by the Controlled Document Recipient or their designee.

Signature: _____ Date: 4/10/03

HISTORY OF REVISIONS

Revision No.	Effective Date	Pages Revised	Reason for Change
0	03/21/02	—	New report. Supersedes TWCP-AK-2.1-008 and TWCP-AK-2.1-010
1	08/27/02	All	Incorporate changes based on process versus operations.
1/IC1	09/05/02	Pages 51 and 52	Add 6 paragraph discussion regarding NDA detection of Sr-90 to section 4.5.2.
		Table 3	Add all Major and Minor Material Parameters, Update column headers to include "Major and Minor Material Parameters".
		Attachment 10	Modify the third column to read "Operations AK Report in which this P/S Code is Described", Delete all section references.
2	10/09/02	All	New revision to incorporate waste stream consolidation. Elimination of the use of the waste code P120 for vanadium pentoxide.
3		All	New revision combining legacy and newly generated debris waste AK

TRUCON	TRUPACT-II Content Code
TRUPACT-II	Transuranic Waste Transporter-Model II
TWBIR	Transuranic Waste Baseline Inventory Report
UCL_{90}	90% Upper Concentration Limi UCL90
UCNI	unclassified controlled nuclear i
VE	visual examination
VOC	volatile organic compound ~~90~~%
WAC	Waste Acceptance Criteria
WI	work instructions 90-percent upper confidence Limit
WIPP	Waste Isolation Pilot Plant
WIPP WAC	Waste Isolation Pilot Plant Waste Acceptance Criteria
WIPP WAP	Attachment B, Waste Analysis Plan, to the *Hazardous Waste Facility Permit Issued to the Waste Isolation Pilot Plant* (EPA No. NM4890139088)
WPF	Waste Profile Form
WMC	waste matrix code
WMP	waste material parameter
WMS	Waste Management System
WODF	Waste Origination and Disposition Form
WPRF	Waste Profile Request Form
WTWBIR	WIPP Transuranic Waste Baseline Inventory Report
XES	X-ray energy spectroscopy

ACCEPTABLE KNOWLEDGE REPORT FOR DEBRIS WASTE STREAMS CONTAINING Pu-239

1.0 INTRODUCTION

All transuranic (TRU) waste must be sufficiently characterized and certified before it is shipped to the Waste Isolation Pilot Plant (WIPP). The U.S. Environmental Protection Agency (EPA) allows use of acceptable knowledge (AK) for waste characterization, and defines AK in its guidance document, *Waste Analysis at Facilities that Generate, Treat, Store and Dispose of Hazardous Waste*. Attachment B, Waste Analysis Plan, to the *Hazardous Waste Facility Permit Issued to Waste Isolation Pilot Plant* (EPA No. NM4890139088) (WIPP WAP) defines AK information and provides guidelines on how AK should be obtained and documented.

and research and development

This AK Report was prepared in accordance with *Acceptable Knowledge Documentation* (TWCP-QP-1.1-021). The primary purpose of this report is to systematically organize, evaluate, and summarize AK information about characteristics of the wastes generated by the plutonium recovery process at the Los Alamos National Laboratory (LANL). Currently, most of the waste is from the Plutonium Facility at Technical Area (TA)-55, one of the TRU waste generators. By doing so, this report provides technical support for delineation of waste streams and assignment of specific waste containers to these waste streams.

2.0 METHODOLOGY USED TO SEARCH FOR AK RECORDS

The AK search for the information related to these debris waste streams covered:

Italicize

- Review of the *Acceptable Knowledge Information Summary* for *Los Alamos National Laboratory Transuranic Waste Streams* (TWCP-AK-2.1-019) (AK ~~Information Summary~~) that includes information regarding all LANL wastes, including TA-55 wastes, and also includes AK isotope ratio information found in *Acceptable Knowledge for Isotope Ratios* (TWCP-AK-2.1-020) (a subset of the AK Information Summary).
- Review of reports, documents, and databases related to the waste generation and waste management activities as documented in the Acceptable Knowledge Roadmap (Attachment 1)
- Interviews with personnel involved with waste generation and waste management as documented in AK reports listed in the Acceptable Knowledge Roadmap (Attachment 1)
- Review of AK reports for facility operations
- Analysis of the operations generating waste, as discussed in the operations AK reports and in this report

Table 1. TRU Waste Streams in which Pu-239 is the Dominant Pu Isotope

Waste Stream	Designation	Mixed or Non-Mixed Status	Waste Stream Name
TA-55-19	Debris	Mixed	Mixed combustible debris waste
LA-NCD01	Debris	Non-Mixed	Non-mixed combustible debris waste
TA-55-30	Debris	Mixed	Mixed heterogeneous debris waste
LA-NHD01	Debris	Non-Mixed	Non-mixed heterogeneous debris waste

Unclassified Controlled Nuclear Information (UCNI) is reported in records, rather than included in this report. Such records are identified as UCNI in the Acceptable Knowledge Roadmap (Attachment 1). When discrepancies in AK information are discovered, they are documented and resolved in accordance with *Acceptable Knowledge Documentation* (TWCP-QP-1.1-021). The resulting documentation is found in Decision/Discrepancy Resolution Documentation (Attachment 8).

3.0 DESCRIPTION OF THE WASTE STREAMS

3.1 Facility and Mission

Since 1978 the Plutonium Facility (Building PF-4) has been located at TA-55 and used for the extraction and recovery of plutonium from residues and scraps generated from operations at various LANL facilities and other U.S. Department of Energy (DOE) sites in the defense complex. The scrap and residues are processed to recover as much plutonium as practicable before disposal. The recovered plutonium is converted into pure plutonium feedstock. This recovery process, associated maintenance operations, limited manufacture of finished parts from purified plutonium, and plutonium research are the sources of TRU-contaminated scrap, residues, and debris generated at LANL. The waste from the plutonium recovery process meets the definition contained in the WIPP WAP, Sec. B-1a, "Plutonium recovery wastes are residues from the recovery of plutonium-contaminated molds, metals, glass, plastics, rags, salts used in electrorefining, precipitates, firebrick, soot, and filters." The plutonium recovery process handles primarily Pu-239 and Pu-242 based samples. These are categorized based upon exact isotopic make-up into various material types. The associated research activities involve other plutonium isotopes, different uranium isotopes, and minor amounts of several other radioisotopes.

Before 1978, wastes were generated from plutonium recovery and purification for defense and non-defense programs although production of heat sources using Pu-238 was and still is the only major non-defense activity. These Pu-238 wastes were generated and produced in the same rooms and gloveboxes and were not

Discard limits (DLs) for plutonium in various types of waste matrices were established by the waste-generating group, and approved by the LANL division office and the DOE Albuquerque Operations Office. Personnel were requested to sort potentially recyclable TRU waste items (i.e., those containing potentially recoverable amounts of Pu) into classes such as rubber, plastics, rags, non-Pu metals, glass, oils, cans, sweepings, etc. These materials were then assayed. Based upon its plutonium level relative to the DL, material was either sent to recovery operations or to "20-year" retrievable storage. The AEC Manual Chapter 0511 (1973) mandated segregation of waste items into combustible and noncombustible categories. All liquids, including oils, were required to be sent to recovery operations for processing. Liquids were explicitly prohibited from any container of solid waste materials (TWCP-3943).

In 1984, a lab-wide TRU Waste Certification Plan was adopted for newly generated TRU waste (TWCP-697). Each LANL waste generator was required to develop an attachment to this plan to define the details of the waste certification functions and controls that applied to their specific operations and waste ~~streams~~ (Section 9 in TWCP-697). Waste Content Codes were assigned by the LANL Waste Management Group, Health, Safety and Environment Division (HSE-7 at that time). These codes were later known as the Item Description Codes (IDC), and categorized the waste into one of nine categories, as listed in Table 2. TA-55, then operated by Materials Science and Technology (MST) Division, generated debris waste under content codes 004 (combustible solids) and 005 (noncombustible scrap) only. The use of non-destructive assay to determine the plutonium level relative to the DL provided impetus for segregation into combustible (for gamma assay) and noncombustible (for neutron assay).

In March 1987, MST Division finalized its Certification Plan attachment for contact-handled combustible and noncombustible solid waste (TWCP-701; Attachment 3). Other waste forms ~~or waste streams~~ were addressed as indicated in Table 2. Combustible and noncombustible solid wastes were defined by the MST document as follows (TWCP-701) and were segregated by mixed and non-mixed:

- Combustible waste forms (Waste Content Code 004) included materials that could be reduced to an ash if desired but that did not require further processing to meet the requirements of the *TRU Waste Acceptance Criteria for the Waste Isolation Pilot Plant* (WIPP-DOE-069) (WIPP WAC) (TWCP-701). (This definition is still current.) Subcategories included plastic-based combustibles, cellulose-based combustibles, and miscellaneous (graphite and graphite crucibles). It was acceptable for the combustible waste stream to include some unspecified "small" fraction of noncombustible solids such as scrap metals.

NOTE: Graphite items were historically segregated as combustible waste; current waste management practices identify graphite items as inorganic debris.

Changes were also introduced into the packaging procedure used (Section 3.2.1 in TWCP-700). Up to two 5-mil liner bags could still be present, but were to be closed by folding, not by taping. All drums were to be fitted with carbon filters, and standard waste boxes (SWBs) were to be fitted with two carbon filters. Waste placed inside the drums was to be contained in a single plastic bag that was twisted, closed with a plastic tie, and then taped (TWCP-12088). Since 1997, plastic bags with filters are used. Waste with the potential to tear the plastic bag, such as broken glass, was to be placed first in a metal container with a slip lid, taped closed, and then placed into the plastic bag. A summary of the physical form, and description for debris waste is given in Table 3.

2000-2001 No underline.

In April 2000, the first revision of the waste packaging procedure currently used at TA-55 was issued as a safe operating procedure (SOP), *Inspecting, Packaging, Rejecting, and Remediating Transuranic Waste for WIPP and for TA-54 Safe Storage* (NMT7-SOP-TA55-013), with four detailed Work Instructions (WI):

- *Inspecting, Labeling, and Preparing TRU Waste Containers* (NMT7-WI1-SOP-TA55-013)
- *Performing Visual Examinations of TRU Waste* (NMT7-WI2-SOP-TA55-013)
- *Packing TRU Waste Containers* (NMT7-WI3-SOP-TA55-013)
- *Sealing TRU Waste Containers* (NMT7-WI4-SOP-TA55-013)

2001-Present

Debris

Revisions to this SOP and associated work instructions were approved by the Carlsbad Field Office (CBFO) on July 17, 2001. Waste packaged by TA-55 after that date is considered to be "newly generated" waste that is packaged in accordance with WIPP WAP-compliant procedures. Waste packaged prior to that date is considered to be "legacy" waste, which is subject to more stringent characterization than newly generated waste. Table 4 illustrates the segregation history for debris waste.

(retrievably-stored)

3.2.2 Waste Generation Records

From the beginning of operations of the current Plutonium Facility at TA-55, the physical description of each waste item generated is documented on a Waste Origination and Disposition Form (WODF) by the waste generator according to controlled procedures (page 24 in TWCP-701; Appendix 1 in TWCP-700; Appendix B in *Inspecting,*

Table 3. Waste Physical Form, Waste Material Parameters, Estimated Volumes, and Content Description for Debris Waste Streams

Waste Stream	Waste Physical Form Maximum Layers of Confinement and Estimated Volume	Waste Description and Major and Minor Waste Material Parameters
TA-55-19	Combustible debris waste (mixed) Legacy: Maximum: 6 layers Volume:1621.42 m^3 Newly Generated: Maximum: 1 layer FY01[a] Volume: 2.9 m^3 FY02[b] Volume: 21.8 m^3 FY03[c] Volume: 29 m^3 FY04[c] Volume: 33 m^3 FY05[c] Volume: 33 m^3 WMPs	Mixed combustible debris waste generated by plutonium recovery, research and development processes at the LANL site, resulting from facility and equipment operations and maintenance. The debris waste includes paper, rags, plastic, rubber, wood-based HEPA filters, and other plastic-based and cellulose-based items. Plastic-based waste includes (but may not be limited to): tape, polyethylene and vinyl; gloves; plastic vials; polystyrene; Tygon® tubing; polyvinyl chloride plastic; Teflon® products; Plexiglas®; and dry-box gloves (unleaded neoprene base). Cellulose-based waste includes (but may not be limited to): rags, wood, paper, and cardboard; laboratory coats and coveralls; booties and cotton gloves; and similar materials. The waste stream may also contain a smaller fraction of noncombustible solids (e.g. leached solids, ash, hydroxide cakes, and impure oxides). The waste stream includes retrievably-stored and newly-generated waste. Major: R, C, PW, Minor: IM, OM, AM, OI, OR, IN, ~~No soil (S) present in this waste stream.~~ WMPs SC
LA-NCD01	Combustible debris waste (non-mixed) Legacy: Maximum: 6 layers Volume: 55.56 m^3 Newly Generated: Maximum: 1 layer FY01[a] Volume: 12.3 m^3 FY02[b] Volume: 5.7 m^3 FY03[c] Volume: 8 m^3 FY04[c] Volume: 9 m^3 FY05[c] Volume: 9 m^3 WMPs	Non-mixed combustible waste generated by plutonium recovery, research and development processes at the LANL site, resulting from facility and equipment operations and maintenance. The debris waste includes paper, rags, plastic, rubber, wood-based HEPA filters, and other plastic-based and cellulose-based items. Plastic-based waste includes (but may not be limited to): tape, polyethylene and vinyl; gloves; plastic vials; polystyrene; Tygon® tubing; polyvinyl chloride plastic; Teflon® products; Plexiglas®; and dry-box gloves (unleaded neoprene base). Cellulose-based waste includes (but may not be limited to): rags, wood, paper, and cardboard; laboratory coats and coveralls; booties and cotton gloves; and similar materials. The waste stream may also contain a smaller fraction of noncombustible solids (e.g. scrap metal, salts, crucibles, metal lids, zippers, discarded tools) and a small fraction of homogenous solids (e.g. leached solids, ash, hydroxide cakes, and impure oxides). The waste stream includes WMPs retrievably-stored and newly-generated waste. Major: R, C, PW, Minor: IM, OM, AM, OI, ~~OS, IS.~~ ~~No soil (S) present in this waste stream.~~ OR, IN, SC

(e.g. scrap metal, salts, crucibles, metal lids, zippers, discarded tools) and a small fraction of homogeneous solids

Table 3. Waste Physical Form, Waste Material Parameters, Estimated Volumes, and Content Description for Debris Waste Streams (continued)

Waste Stream	Waste Physical Form Maximum Layers of Confinement and Estimated Volume	Waste Description and Major and Minor Waste Material Parameters
TA-55-30	Heterogeneous debris waste (mixed) Legacy: Maximum: 6 layers Volume: 2270.09 m^3 Newly Generated: Maximum: 1 layer FY01[a] Volume: 4 m^3 FY02[b] Volume: 19.7 m^3 FY03[c] Volume: 26 m^3 FY04[c] Volume: 30 m^3 FY05[c] Volume: 30 m^3	Mixed heterogeneous debris waste generated by plutonium recovery, research and development processes at the LANL site, resulting from facility and equipment operations and maintenance. The waste includes plutonium-contaminated noncombustible and combustible debris waste. The noncombustible debris waste includes (but may not be limited to): small tools and equipment; cans; motors, pumps and process equipment; gloveboxes and glovebox windows; ventilation ductwork; composite HEPA filters; metal pipes; glass; bottles; graphite; salt, slag and crucibles; and miscellaneous lab ware. The waste stream may also contain a smaller fraction of combustible solids (e.g. paper, rags, plastic, rubber, leaded gloves) and a small fraction of homogeneous solids (e.g. leached solids, ash, hydroxide cakes, impure oxides). The waste stream includes retrievably-stored and newly-generated waste. Major: IM, AM, OM, OI, Minor: C, R, PW, OR, IN. ~~No soil (S) present in this waste stream.~~ , S. WMPs WMPs
LA-NHD01	Heterogeneous debris waste (non-mixed) Legacy: Maximum: TBD Volume:49.19 m^3 Newly Generated: Maximum: 1 layer FY01[a] Volume: 7.2 m^3 FY02[b] Volume: 8.5 m^3 FY03[c] Volume: 12 m^3 FY04[c] Volume: 13 m^3 FY05[c] Volume: 13 m^3	Non-mixed heterogeneous debris waste generated by plutonium recovery and research and development processes at the LANL site, resulting from facility and equipment operations and maintenance. The waste includes plutonium-contaminated noncombustible and combustible debris waste. The noncombustible debris waste includes (but may not be limited to): small tools and equipment; cans; motors, pumps and process equipment; gloveboxes and glovebox windows; ventilation ductwork; composite HEPA filters; metal pipes; glass; bottles; graphite; salt, slag and crucibles; and miscellaneous lab ware. ~~The combustible waste includes paper, rags, plastic, rubber, wood-based HEPA filters, and other plastic-based and cellulose-based items. Plastic-based waste includes (but may not be limited to): tape, polyethylene and vinyl; gloves; plastic vials; polystyrene; Tygon® tubing; polyvinyl chloride plastic; Teflon® products; Plexiglas®; and dry-box gloves (unleaded neoprene base). Cellulose-based waste includes (but may not be limited to): rags, wood, paper, and cardboard; laboratory coats and coveralls; booties and cotton gloves; and similar materials. The waste stream may also contain a smaller fraction of homogeneous solids (e.g. leached solids, ash, hydroxide cakes, impure oxides).~~ The waste stream includes retrievably-stored and newly-generated waste. Major: IM, AM, OM, OI, Minor: C, R, PW, OR, IN. ~~No soil (S) present in this waste stream.~~ , S. WMPs WMPs

[copy sentence here]

[a]Actual, [b]Actual through August, September projected, [c]Projected

NOTE: Waste material parameters are: C = cellulose, R = rubber, PW = plastics – waste materials, IM = iron base metal alloys, AM = aluminum base metal alloys, OM = other metal alloys, OI = other inorganic material, IN = inorganic material, OR = organic material; all waste material parameters ~~except soil may be present~~ in ~~small~~ varying quantities in these waste streams.

, S = soil

Table 4. History of Debris Waste ~~Segregation~~ Management

Date	WIPP WAC Status	WIPP WAC	AEC Manual Chapter 0511	NDA Requirements
1978-1983	Not implemented	N/A	Segregate combustibles and noncombustibles	Segregate combustibles and noncombustibles
1984-1987	Draft Attachment to LANL Certification Plan	Segregate combustibles and noncombustibles IDC 004 and 005	Segregate combustibles and noncombustibles	Segregate combustibles and noncombustibles
1987-1994	Final Attachment to LANL Certification Plan	Segregate combustibles and noncombustibles IDC 004 and 005	N/A	Segregate combustibles and noncombustibles
1995-2001	QAPP Released, New LANL Certification Plan, WIPP WAP	Segregate by waste streams to meet WAP requirements	N/A	Segregate by more detailed waste matrix to improve NDA results
2002-present	WIPP WAP, LANL Certification Plan	Segregate by waste streams to meet WIPP requirements	N/A	Consolidate similar waste matrices

N/A = not applicable

Packaging, Rejecting, and Remediating Transuranic Waste for WIPP and for TA-54 Safe Storage [MT7-SOP-TA55-013]. Items are bagged out of gloveboxes and sent to the Waste Management section, where multiple items are placed into drums. Starting in 1987, the Plutonium Facility at TA-55 began its current system of tracking waste items by their nuclear material content, using the computerized Material Accountability and Safeguards System (MASS).

Waste items are labeled with an item identification (ID) code that contains information on the waste material parameter of the item and an embedded P/S code that corresponds to nuclear materials accountability for the operation that produced the waste item.

The P/S code refers to a specific part of an operation within the overall Pu-recovery process, but generally applies to more than one glovebox or to the same operation carried out in multiple locations or gloveboxes in PF-4. Recording the P/S codes was inconsistent until about 1995 (TWCP-351). In the packaging operation for legacy waste, a standard form, the Discardable Waste Log Sheet (DWLS), was used to list each ID code (page 25 in TWCP-701; Appendix 2 in TWCP-700; Appendix C in NMT7-SOP-TA55-013). This form was signed by the waste packager and approved by quality assurance personnel. Both the WODF and DWLS for each TRU waste drum are maintained as hard copy records by the generator. Many of these waste tracking ID codes for individual items in drums of debris waste are compiled in a list that correlates item codes with containers or in a database maintained as the

recovery process. However, the P/S codes provide the finest level of detail available to associate waste items with a specific operation of origin. Consequently the P/S code system is used extensively in the description and documentation of AK information for RCRA and for chemical constituents for the Pu-recovery process in this report and in the operations AK reports. While a P/S code can be associated with most waste items generated after 1987 and all items generated after 1995, the P/S code does not provide a method of segregating waste or delineating waste streams.

3.2.3 Waste Stream Delineation

LANL

Waste stream assignment is made on the basis of waste generator information compiled in the AK ~~Information~~ ~~Summary~~. The summary is based primarily on the TRU Waste Management ~~System (WMS)~~ database, then on hazardous waste status (mixed or non-mixed waste streams). The inventory list currently exceeds ~~15~~ 20,000 containers, with generation dates ranging from the early 1970s to the present, and is the starting point for the delineation of waste streams. Waste generator information is reviewed to identify the types and sources of waste items present in each container. This information is used to determine the most appropriate waste summary group, waste matrix code, and potential for the presence of hazardous constituents in that container.

The overall strategy starts by eliminating from consideration containers that are not currently eligible for disposal at WIPP. Ineligible containers include those that are generated by non-defense programs, that are remote-handled, or that contain non-solid waste.

Wastes are assigned to waste streams based on the waste segregation schemes shown in Figure 1.

* [Insert para from p. 14]

TA-55 maintains two separate Pu-recovery process lines, one for Pu-238 based isotopic materials (not covered in this AK report) and one for Pu-239 and other Pu-isotope recovery that is the subject of this report. Generator records distinguish waste from each process using a "material type" notation that is explained in more detail in Section 4.1. Material types based on Pu isotopes other than Pu-239 (for example Pu-242) are processed in the same gloveboxes with the same equipment as the Pu-239 materials. The waste items from the occasional processing of these other material types are expected to be contaminated with carryover Pu-239, so that segregation of waste streams for these minor Pu-isotope types is not feasible. In some special cases, Pu-238 materials are processed in equipment used in Pu-239 operations, so some cross-contamination of wastes with Pu-238 and Pu-239 is expected. One example of this is the thermal decomposition operation, where Pu-

The LANL procedure for delineating TRU waste streams is described in Documentation Acceptable Knowledge (TWCP-QP-1.1-021).

contaminated rags were ashed. Both Pu-238 and Pu-239 based materials were sent through this operation, resulting in waste of mixed material type. However, the majority of Pu-238 and Pu-239 operations are segregated, allowing separate delineation of Pu-238 waste streams.

The hazardous waste status of waste streams from the Pu-239 recovery process are delineated only as non-mixed or mixed with a common set of hazardous waste numbers (HWNs). MASS nuclear material accountability system and P/S codes allow detailed assignment of HWNs associated with each P/S code (see Tables 14 and 15 for a complete list). However, since waste items are packaged into containers based on the physical material content of the waste, without regard to P/S code, each waste container can, and does, include waste items from several P/S codes. ~~For the containers where the P/S code of each item is~~ [Slet] known, HWNs can be assigned on a container-by-container basis.

The HWN assignment of the waste stream becomes the complete list of HWNs assigned to all P/S codes. A sort on the P/S code of each waste item in a container can determine the special case of containers containing all non-mixed waste items. If the P/S code information is missing for any item in a waste container, the container is conservatively assigned to the mixed waste stream. This is necessary for some of the older waste. In addition, some waste originally assigned to non-mixed waste streams is later discovered to contain lead shielding, and is reassigned to corresponding mixed waste streams (*Acceptable Knowledge Accuracy Report* [TWCP-AK-2.1-012]).

~~3.2.4 Delineation by Material Matrix~~

[Move to * on Page 13]

Waste segregation practices separate wastes into combustible (IDC 004) and noncombustible (IDC 005) waste forms based on plans for treatment of the combustible waste by incineration or other thermal decomposition strategies. Generator records list only the single, major component of each waste item, so that segregation by waste matrix appears in the records to be more exact than it was in practice. In particular, since any waste forms that are chemically compatible could be combined in the noncombustible waste form, the noncombustible waste form often contains a larger fraction of combustible waste than would be expected from the IDC description.

~~3.2.5 Revised TRU Waste Stream Delineation Strategy~~

3.2.5.1 Overview

The LANLTRU waste certification project has recently revised the strategy by which waste streams destined for

Figure 1
LANL TRU Waste Stream Delineation Process

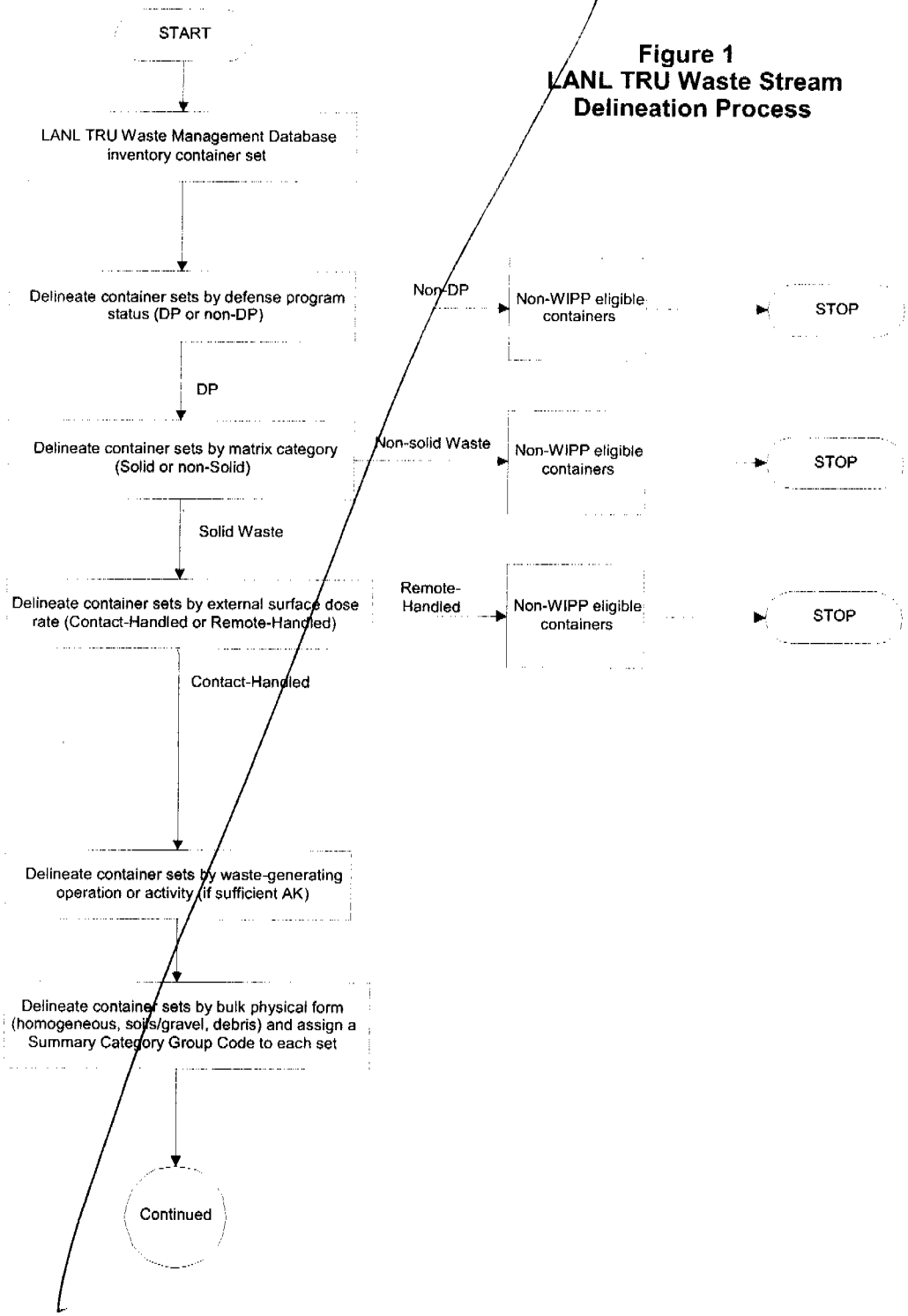

LANL TRU Waste Stream Delineation Process (continued)

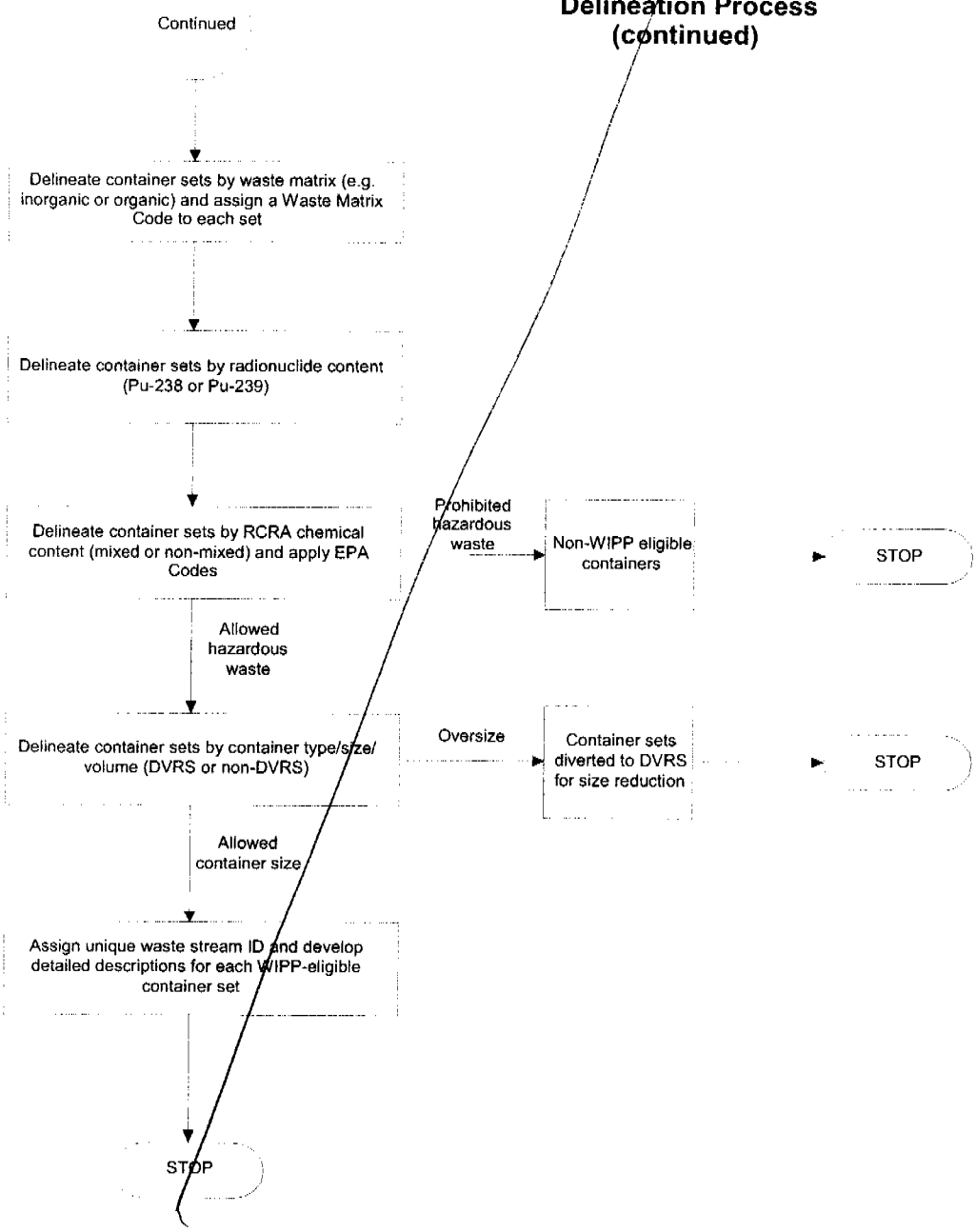

WIPP are delineated using acceptable knowledge (AK) information. LANL has re-evaluated AK waste matrix information, and has consolidated waste streams with similar waste forms. The revised strategy reduces the number of WIPP-eligible waste streams from 109 to 22.

3.2.5.2 Delineation Strategy

Delineation is made based on the waste-generating operation or activity. The container sets are then subdivided by summary category group, waste matrix, radionuclide content, and RCRA hazardous chemical content. Finally, oversize container sets are separated for diversion to LANL's Decontamination and Volume Reduction System.

The resultant container sets are assigned unique waste stream identifiers, and detailed descriptions are developed from supplemental AK sources. The following general waste streams, with the applicable waste matrix codes, have been delineated for containers.

- Heterogeneous debris waste (mixed and non-mixed) (Waste Matrix Code S5400)
- Combustible debris waste (mixed and non-mixed) (Waste Matrix Code S5300)
- Inorganic homogeneous solid waste (mixed and non-mixed) (Waste Matrix Code S3100)
- Organic homogeneous solid waste (mixed) (Waste Matrix Code S3200)
- Soils (mixed and non-mixed) (Waste Matrix Code S4100)

~~3.2.5.3 Rationale~~

LANL TRU debris waste streams are not delineated beyond the organic (combustible) and heterogeneous categories to more detailed waste matrix codes. Delineation to identify detailed waste streams such as metal or glass waste has been previously attempted (see the *Los Alamos National Laboratory Transuranic Waste Characterization Sampling Plan*, TWCP-PLAN-0.2.7-001,R.0, 1997). However, as supplemental AK information is gathered on specific waste-generating operations, it is apparent that detailed delineation cannot be reliably made

because TRU waste management practices at LANL have historically not made such distinctions for waste packaging purposes.

The majority of the TRU waste originates at TA-55, which is LANL's Plutonium Facility. The delineation of waste streams based on waste matrix is based largely on the TRU waste management practices at TA-55. Historically, TRU debris wastes have been segregated into combustible and noncombustible categories. AK information for the physical form and material content of waste containers reflects this segregation practice. LANL waste management practices allow for the combustible waste to include some unspecified "small" fraction of noncombustible solids, such as scrap metal. Similarly, it is acceptable for the noncombustible waste to include some unspecified "small" fraction of combustible solids such as plastics. Therefore, debris waste that is at least 50 volume percent combustible (organic) items is delineated from waste that contains less than 50 volume percent combustible items (i.e. greater than 50 volume percent noncombustible inorganic items).

3.2.5.4 Reconciliation of Characterization Data with AK Information

For legacy waste, each container in the TRU waste inventory is assigned to a waste stream based on the available container-specific AK information. Each waste stream is associated with a waste matrix code that describes the expected material composition of the waste stream. The waste material parameter (WMP) composition of an individual container, as verified by real-time radiography (RTR) or visual examination (VE), may deviate from the expected composition based on the waste stream description. However, an individual container that deviates from the overall waste stream description may remain in that waste stream as long as the characterization data for the entire population of containers are consistent with the AK description of the waste stream.

In the past, LANL has reconciled the RTR and VE characterization data with AK information for individual containers by changing the waste stream assignment of any container that did not meet the definition of the waste matrix code associated with the AK waste stream. The AK reconciliation process is described in *Waste Characterization Data Reconciliation with Acceptable Knowledge and*

Acceptable Knowledge Accuracy Reporting (TWCP-DTP-1.2-064). LANL proposes to alter the AK reconciliation procedure in the following way.

- If the WMP volume percentages for an individual container do not meet the definition of the waste matrix code associated with the AK waste stream, the volume percentage distribution for the entire population of characterized containers in that waste stream is evaluated.

- If the aggregate WMP volume percentage distribution *with the inclusion of the nonconforming container data* meets the waste matrix code definition, the deviant container will not be reassigned to different waste stream.

- If the aggregate WMP volume percentage distribution with the inclusion of the nonconforming container data does *not* meet the waste matrix code definition, the nonconforming container will be reassigned to different waste stream.

For example, the RTR data for a container assigned to an organic debris waste stream indicates that glass comprises 62% of the waste by volume and plastic debris comprises 48%. A nonconformance report is issued for the container because the RTR data do not verify the waste matrix code of S5300 that is assigned to the waste stream. However, the average organic volume percent for 1,700 characterized containers in the waste stream, including the nonconforming container, is 92%. The nonconforming container may remain in the waste stream because the overall description is unchanged: the majority (greater than 50 volume percent) of the waste is organic debris. Verification of proper waste stream delineation is provided with the pre-WAP RTR data, which shows TA-55-19 as basically 100 percent combustibles and shows TA-55-30 as 70 percent heterogeneous. (TWCP-11062).

For newly generated waste, waste items are packaged into waste containers based on the material content of the waste, not by the P/S of origin. Therefore a single waste container may include waste items from several different P/S codes. In the AK Information Summary, wastes are assigned to waste streams based on the following waste segregation schemes:

- First by radioisotope content (Pu-238 or Pu-239 material type)
- Then by material matrix with consideration to the NDA technique to be used (combustible, noncombustible, metal, glass, etc. waste types)
- Then by hazardous waste status (mixed, non-mixed, or special case waste streams)

Waste stream delineation is performed using waste generator information (such as the WODF) that is compiled in the AK Information Summary. Because waste items from several different P/S codes may be combined into each waste container, a special sort on the P/S code of each waste item in a container is necessary to determine if the container contains all non-mixed items, some or all mixed-waste items, or a special case item.

3.2.~~6~~4 Waste Physical Form and Content Description: Assignment of Waste Stream Numbers

3.2.~~6~~4.1 Waste Segregation Practices

Prior to April 17, 1995, debris waste was segregated only according to Pu isotopic make-up and combustibility. Although individual waste items were tracked (and recorded on WODF and DWLS forms), no attempt was made to separate them along composition or process lines. Thus, numerous waste material parameters and constituents would end up in the same drum. For this reason, all Pu-239 debris waste generated before April 17, 1995 is nominally assigned to two waste streams: TA-55-19 (~~>50%~~ predominantly combustible) and TA-55-30 (~~>50%~~ predominantly heterogeneous).

Between April 17, 1995 and July 17, 2001, additional segregation of debris waste was conducted. Non-combustible items were disposed of according to whether or not RCRA constituents were present (i.e., mixed vs. non-mixed). This resulted in the generation of new waste streams. Combustibles were not segregated according to matrix (i.e., rubber, plastics, cellulose-based materials, etc. were still combined), but were separated on the basis of RCRA constituent content. Therefore, from 1995 through July 16, 2001, combustibles were further categorized as either mixed or non-mixed.

Beginning July 17, 2001, all debris waste generated at TA-55 bears the label "newly generated" and falls into four distinct waste streams:

1. TA-55-19: Mixed combustible
2. LA-NCD01: Non-mixed combustible
3. TA-55-30 Mixed heterogeneous
4. LA-NHD01: Non-mixed heterogeneous

3.2.6.2 Records and Written Evidence

In addition to the segregation protocols described above, records exist that give more detailed information about the contents of some drums. For example, a subset of debris waste drums generated between 1987 and 1995 can be shown to be non-mixed based upon database records. Five primary information sources have been found that significantly augment "procedural" information such as that given in Section 3.2.5. These are listed in Table 5 in descending order of reliability. The reliability/quality of the data source is determined by how "close" the information is to entries made by the original waste generator. The WMS list contains data entered by the generators and data were entered under a quality assurance program; it is therefore considered the most reliable source of information pertaining to TA-55 wastes. The other data sources in Table 5 provide unique information of one type or another, but the information is considered somewhat less reliable because of occasional discrepancies that arise between listed entries and original generator data (when the latter exist). The non-certified archive database is particularly useful for tracking information pertaining to "S" drums (older drums having a different numbering scheme). The ~~TA-54~~ LANL TRU Waste Management database is used to obtain filter dates, location information, and package dates. The certified archive database contains unique information about waste generated between 1992 and 1996, and the Sampling Plan (Rev. 0) contains information about older "legacy" drums.

Table 5. Primary Information Sources

Source #	Description
1	TA-55 WMS
2A	Archive certified Microsoft Access database
2B	Archive noncertified Microsoft Access database
3A	Sampling Plan Rev. 0
3B	~~TA-54 unofficial~~ LANL TRU Waste Management Oracle database

The possible presence of Cm-244 in TRU waste is of particular interest to radioassay operations because it can affect the choice of a radioassay instrument to use for optimal results. Cm-244 was introduced in recovery operations in P/S code DOP, which started in 1988 (TWCP-5165). Material outputs from this operation sometimes are sent to P/S codes IS or WE. Cm-244 could also be part of waste under P/S code CA because both operations take place in the 300 Wing of PF-4. Because only one room in this area is available for bagouts, TRU waste from P/S codes DOP and CA are sometimes combined. In addition, because rags from DOP are sent to IS, Cm-244 could be present in the ash produced by this operation, which is then processed through nitrate aqueous recovery operations. Some unknown fraction of the Cm-244 could ultimately end up in the evaporator bottoms, which is then immobilized in cement in P/S code CF. In any case, however, Cm-244 is not expected to be present in any waste generated before 1988.

During Project 2010 characterization, the contents of each waste package undergo non-destructive analysis to provide detailed radioisotopic data. These data are used to evaluate the accuracy of AK information in accordance with *Waste Characterization Data Reconciliation with Acceptable Knowledge and Acceptable Knowledge Accuracy Reporting* (TWCP-DTP-1.2-064).

5.0 CORRELATIONS BETWEEN WASTE STREAMS

All of the debris waste streams covered by this AK Report were generated by the same plutonium recovery activities at LANL but differ in physical form, waste matrix code, and hazardous constituents. In addition to these waste streams in which Pu-239 is the dominant Pu isotope, analogous waste streams containing Pu-238 as the dominant Pu isotope were generated during the same time period at the plutonium facility. Homogeneous waste streams were also generated from the Pu-239 recovery process; they are described in a separate report.

Waste containers in a waste stream are characterized as a campaign, in which the targeted group of waste containers to be characterized are selected based on criteria such as availability of the waste containers, waste loading level, availability of waste generator records, and hazardous waste numbers. Waste stream lots selected for convenience of characterization activities are defined in the applicable WSPF.

6.0 ASSIGNMENT OF WASTE MATRIX CODES

Waste matrix codes are assigned to waste streams based on waste physical form and content ~~generation practices~~ and AK reports in accordance with *Assignment of Waste Matrix Codes* (TWCP-DTP-1.2-053). Additional codes apply to these waste streams, based on code descriptions in the *WIPP Transuranic Waste Baseline Inventory Report* (WTWBIR) (CAO-94-1005), the *Transuranic Package Transporter (TRUPACT)-II Content Codes* (DOE/WIPP-89-004/Rev.13.5), Radioactive Solid Waste Disposal (RSWD) code, and Item Description

Code (IDC) (Table 13). RSWD and IDC codes assigned to individual containers by the waste generator are summarized by waste stream in the AK I~~nformation~~ S~~ummary~~.

7.0 ASSIGNMENT OF WASTE MATERIAL PARAMETER CODES

The waste material parameter codes are qualitatively assigned to the waste streams based on AK information and knowledge of waste generation practices described in the Waste Management Procedures (see Section 3.2). These waste material parameter (WMP) codes are confirmed for legacy waste by comparing them against WIPP-compliant waste characterization data from real-time radiography and for newly generated waste by comparing them against WIPP-compliant waste characterization data from visual examination techniques.

8.0 ASSIGNMENT OF EPA HAZARDOUS WASTE NUMBERS

8.1 F, K, and P Listings

F001, F002, F003 and F005 apply to combustible and non-combustible waste generated by several of the P/S codes covered by this report. In many cases, the applicability of the HWN is limited to waste generated during a specific period, as discussed in the appropriate AK report. All four F codes are conservatively applied to wastes with unknown P/S codes.

The applicability of F-listings to a specific waste stream is determined by the contents of the waste containers and the associated P/S codes (see Table 14). If any F-listing is applicable to combustible debris from a particular P/S code, then it is also assumed to be applicable to non-combustible debris from the same P/S code. Metal and glass are generally non-porous and do not absorb liquids, and any metal or glass in contact with volatile organic chemicals would have been air-dried before being discarded as waste. However, noncombustible waste streams also contain a small percentage of combustible waste that could be contaminated with organic chemicals.

At one time a P120 code was applied to certain drums generated in 1998 because of the temporary use of vanadium pentoxide for about 6 months in that year. Based upon investigation into the way the material was handled, this code is no longer needed. A P120 assignment would be used only if waste resulted from spillage of this material or from disposal of un-reacted/unspent material. No un-reacted/unspent material was disposed of in TRU waste drums. In addition, no significant spill of this material occurred. If a spill had occurred, suitable records would exist (e.g., incident reports, waste profile forms). The absence of such documentation, coupled with information obtained through interviews of people who worked with the material, indicate that a P120 assignment is not necessary (TWCP-12081).

Table 13. Assignment of Waste Codes to Waste Streams Containing Pu-239

Waste Stream	Mixed or Non-Mixed Status	Waste Stream Name	WMC	WTWBIR Code[a]	TRUCON Code*	RSWD Code*	IDC*
TA-55-19	Mixed	Combustible debris waste	S5300	LA-W004	LA116 LA154	A14, A15, A16, A17, A18, A55, A60	004
LA-NCD01	Non-Mixed	Combustible debris waste	S5300	LA-T004	LA116 LA154	A14, A15, A16, A17, A18, A55, A60	004
TA-55-30	Mixed	~~Noncombustible~~ Heterogeneous debris waste	S5400	LA-W005	LA116 LA117 LA118 LA123 LA125 LA154	A18, A19, A25, A27, A28, A30, A47, A50, A51, A52, A60, A61, A95	001 005
LA-NHD01	Non-Mixed	~~Noncombustible~~ Heterogeneous debris waste	S5400	LA-T005	— [copy]	A18, A19, A25, A27, A28, A30, A47, A50, A51, A52, A60, A61, A95	001 005

NOTES: *These codes are defined in ~~Tables F-4, F-5, and F-6 of~~ the AK ~~Information~~ ~~Summary~~. For the majority of legacy waste containers, traceable AK documentation has not been obtained that shows what codes, if any, were assigned by the waste generator. In many cases, the code listed may apply to only one out of thousands of containers in the waste stream.

- Sources: TA-55 TWID, R3, Appendix G; NMT7-WI2-SOP-TA55-013,R4, Appendix D; AK ~~Information Summary, R.6, Table 3-1 and Appendix D~~. Attachment b.
- WTWBIR numbers have been assigned to waste streams covered by this AK Report based upon the identifier from CAO-94-1005 that is considered to provide the closest match to the waste stream characteristics, based on the table sources listed above.

- RTR batch data report indication of the observed layers of packaging
- If packaging filter information is indeterminate, use the TRUCON code for "no filters in packaging"
- If RTR information is indeterminate, use the default assignment given in the Waste Stream Profile Form package
- If no default code is assigned, assign code based on most conservative (maximum packaging layers) TRUCON letter designator

This guidance only applies to retrievably stored waste. Newly generated waste is packaged under procedures approved by Project 2010 and CBFO, and are assigned correct TRUCON codes.

15.0 CITED PROCEDURES AND REQUIREMENTS DOCUMENTS

- 40 CFR Part 261—Identification and Listing of Hazardous Wastes
- 49 CFR Part 261, Subpart C—Segregation and separation chart of hazardous materials. Section 177.848, Segregation of hazardous materials
- *Acceptable Knowledge Accuracy Report* (TWCP-AK-2.1-012,R.0)
- *Acceptable Knowledge Documentation* (TWCP-QP-1.1-021)
- *Acceptable Knowledge for Isotope Ratios* (TWCP-AK-2.1-020)
- Acceptable Knowledge Information Summary for LANL Transuranic Waste Streams (TWCP-AK-2.1-019)
- *Assignment of Waste Matrix Codes* (TWCP-DTP-1.2-053)
- *Calculation of UCL_{90} Values* (TWCP-DTP-1.2-006)
- *Content Code Assessments for LANL TRUCON Codes* (DOE/WIPP-89-004)
- *Determining Isotopic Ratios in Waste Containers Using the RANT PC/FRAM Assay System* (TWCP-DTP-1.2-029)
- *DOE Order 5820.1 and 5820.2,* Management of Transuranic Contaminated Material, U.S. Department of Energy, 09/30/82 and 02/06/84
- *DOE Order 435.1* Radioactive Waste Management, Department of Energy, Environmental Management, 2001
- *Hazardous Waste Facility Permit Issued to Waste Isolation Pilot Plant* (EPA No. NM4890139088) (Attachment B, Waste Analysis Plan)

- *Headspace Gas Sampling and Analysis Using an Automated Manifold* (TWCP-DTP-1.2-041)
- *Inspecting, Labeling, and Preparing TRU Waste Containers* (NMT7-WI1-SOP-TA55-013)
- *Inspecting, Packaging, Rejecting, and Remediating Transuranic Waste for WIPP and for TA-54 Safe Storage* (NMT7-SOP-TA55-013), with associated detailed Work Instructions (WI)
- ~~*Los Alamos National Laboratory Transuranic Waste Characterization Acceptable Knowledge Information Summary* (TWCP-PLAN-0.2.7-001)~~
- *Nonconformance Reporting and Tracking* (TWCP-QP-1.1-007)
- *Operating the High Efficiency Neutron Counter (HENC) Using INCC* (TWCP-DTP-1.2-059)
- *Packing TRU Waste Containers* (NMT7-WI3-SOP-TA55-013)
- *Performing Nondestructive Testing Using the Mobile Real-Time Radiography System* (TWCP-DTP-1.2-008)
- *Performing Visual Examinations of TRU Waste* (NMT7-WI2-SOP-TA55-013)
- *Purex Technical Manual* (WHC-CM-5-25, 8/25/88)
- *Reconciliation of Visual Examination and Radiography Information* (TWCP-QP-1.1-028)
- *Records Management* (TWCP-QP-1.1-004)
- *Sealing TRU Waste Containers* (NMT7-WI4-SOP-TA55-013)
- *TA-55 Standard Operation Procedure (SOP)* (406-GEN-R00)
- *TA-55 Transuranic Waste Interface Document* (NMT7-AP-TA55-018)
- *Transuranic Package Transporter (TRUPACT)-II Content Codes* (DOE/WIPP-89-004)
- *U.S. Atomic Energy Commission AEC Manual:* Chapter 0511, Radioactive Waste Management, AEC 1993
- *Waste Analysis at Facilities that Generate, Treat, Store and Dispose of Hazardous Waste* (EPA-530-R-94-024)

TWCP Record No.	Information Category Code	Information	Source	Summary	Limitations
TWCP-5372	D	Vanadium pentoxide in waste generated by P/S codes SD and SS	Interview with Jim Foxx (TA-55 SME) on May 7, 2001	Vanadium pentoxide was used between February 1998 and June 1998. SME information indicates that waste from this work would have been packaged into containers that were closed by the end of December 1998.	None
TWCP-8003	D	Description of information developed for database system for tracking waste disposed and/or stored at TA-54, Area G	Report, "Documentation for Rad Waste ORACLE Database's List of Acceptable Radioisotopes, Specific Activities, Categories, and Regulatory Limits"	Information is provided on how specific activities were assigned for different material types	Developed to evaluate waste stored at TA-54, Area G
TWCP-9499	D	Memo regarding Actinium usage	Memo from Wayne Punjak regarding AC-227 usage	Information regarding a previously undocumented use of Actinium.	None
TWCP-9810	D	Memo regarding reporting U-234	Memo from Mike Baker regarding U-234 assay	Approach for calculating U-234 concentration based on U-235.	None
TWCP-11061	C	Headspace gas data collected prior to WAP becoming effective.	Review of Headspace Gas data from Pre-WAP Analysis for Additions to AK	Detailed information on the tentatively identified compounds found in pre-WAP HGAS batch data reports.	Pre-WAP and limited on waste streams covered.
TWCP-11062	C	Real-time-radiography data collected prior to WAP becoming effective.	Review of RTR Data from Pre-WAP Analysis for TA-55 Debris Waste	Summary information on the waste material parameters and prohibited items for TA-55 debris waste streams.	Only on TA-55 debris waste streams.
TWCP-12081	C	Interview with SME	Interview with Jim Foxx (TA-55 SME) on March 11, 2003	While vanadium pentoxide was used, no history or information regarding a spill was found. Therefore, the P120 HWN does not apply	None
TWCP-12088	B	Discussion of use of plastic ties	*Memo LAAMEP 2BL-006 To Stanley Kasiewicz*	Documents waste management practices regarding use of ties on bag-out closures.	None

* Information Category Codes: A = forms intended for use in waste certification, B = data from controlled databases and published documents, C = unpublished data, and D = interviews, memos, and letters

TWCP Record No.	Information Category Code	Information	Source	Summary	Limitations
TWCP-AK-2.1-002,R.2	A	Generator interviews and TWCP AK references	*Acceptable Knowledge Report for Chloride Operations at ~~TA-55~~* LANL	Detailed information on each P/S code for chloride operations at TA-55	None
TWCP-AK-2.1-003,R.2	A	Generator interviews and TWCP AK references	*Acceptable Knowledge Report for Metal Operations at ~~TA-55~~* LANL	Detailed information on each P/S code for metal operations at TA-55	None
TWCP-AK-2.1-004,R.2/IC1	A	Generator interviews and TWCP AK references	*Acceptable Knowledge Report for Miscellaneous Operations at ~~TA-55~~* LANL	Detailed information on each P/S code for miscellaneous operations at TA-55	None
TWCP-AK-2.1-005,R.2	A	Generator interviews and TWCP AK references	*Acceptable Knowledge Report for Nitrate Operations at ~~TA-55~~* LANL	Detailed information on each P/S code for nitrate operations at TA-55	None
TWCP-AK-2.1-006,R.2	A	Generator interviews and TWCP AK references	*Acceptable Knowledge Report for Pyrochemical Operations at ~~TA-55~~* LANL	Detailed information on each P/S code for pyrochemical processes at TA-55	None
TWCP-AK-2.1-007,R.2	A	Generator interviews and TWCP AK references	*Acceptable Knowledge Report for Special Processing Operations at ~~TA-55~~* LANL	Detailed information on each P/S code for special processing operations at TA-55	None
TWCP-AK-2.1-019 AND TWCP-AK-2.1-020	C	LANL TA-55 waste management database, LANL TA-54 TRU waste management database, and TWCP AK references based on generator's original data	*~~Los Alamos National Laboratory Transuranic Waste Characterization~~ AK Information Summary* [and] *Acceptable Knowledge for Isotopic Ratios*	Detailed information on each waste drum and waste stream	Reliability and completeness of waste generator data is highly variable, and this information summary is continually being updated

do not italicize

for LANL Transuranic Waste Streams

* Information Category Codes: A = forms intended for use in waste certification, B = data from controlled databases and published documents, C = unpublished data, and D = interviews, memos, and letters

QP-00-004,R.0
Effective Date: 06/18/03

TWCP-15415

RECORDS SUBMITTAL

INSTRUCTIONS: This form is prepared by the record source when submitting individual records, batch data reports, or a records package to the RMDC Center. For records packages, a Table of Contents (TOC) must also be submitted. Each record submitted requires a complete form.

MANDATORY: X To the best of my knowledge, the record(s) have no radioactive contamination.

Signature: _____

RECORD TYPE:

X Project 2010 ☐ Facility (RRES)

☐ Other: _____ ☐ UCNI ☐ Proprietary

RECORD SOURCE:

Submittal Date: 7/25/03___ Z No.: 109592_____ Name/Org: PATRICIA PATTON – RRES-CE_____

Originator: JOHN MUSGRAVE_____ Organization: NMT_____

TYPE OF RECORD/ACTION TO BE TAKEN

X Individual Record ☐ Batch Data Report ☐ Records Package (+ TOC)

X New ☐ Revision* ☐ Addition* ☐ Supersedes*

*Record Barcode Number: _____ *Review Cycle (if applicable): ☐ Yes ☐ No ☐ NA

RECORD ID NUMBER: (e.g., memo symbol number, procedure (include revision), deficiency number, batch data report number, unique record identifier if applicable):

TWCP-AK-2.1-006, R.2 PP 7/25/03

Record Date: 5/18/01____ Physical Page Count: 112 X Single Sided ☒ Double Sided

Category Number: (from page two): 07_____

RECORD TITLE, SUBJECT, AND/OR KEYWORDS:

TWCP-AK-2.1-006, R.2/IC1 Process AK Report for Pyrochemical Processes at TA-55 (INCLUDES INTERIM CHANGE 1) - LA-UR-01-2558 – LA-UR-02-1713

RECORD CENTER USE ONLY

☑ Accepted Date: 7-25-03 ☐ Return Date: _____

Signature: _____ Resubmitted: _____

RIDs Type: LT

Scan Date: _____ By: _____ QC Date: _____

X-Sender: chsmith@norris-mail.lanl.gov
X-Mailer: QUALCOMM Windows Eudora Version 5.1
Date: Thu, 24 Jul 2003 10:37:16 -0600
To: pgp@lanl.gov
From: Cathy Smith <chsmith@lanl.gov>
Subject: Please retire Process AK Reports
Cc: sgw@lanl.gov
X-Scanned-By: MIMEDefang 2.35

Hi Patsy,

As we discussed yesterday, here is the list of Process AK Reports that we would like to retire as controlled documents and submit as records to RMDC. Could you let Betty Humphrey and myself know when you have the record IDs - we need to update the references in the main AKIS document.

Thanks a million!

Cheers, Cathy

The following can be turned into Records, to be referenced in our AKIS or AK Summaries...

1. TWCP-AK-2.1-002, R.2/IC1 Process AK Report for Chloride Operations at TA-55

2. TWCP-AK-2.1-003, R.2/IC1 Process AK Report for Metal Operations Processes at TA-55

3. TWCP-AK-2.1-004, R.2/IC2 Process AK Report for Miscellaneous Operations at TA-55

4. TWCP-AK-2.1-005, R.2/IC1 Process AK Report for Nitrate Operations at TA-55

5. TWCP-AK-2.1-006, R.2/IC1 Process AK Report for Pyrochemical Processes at TA-55

6. TWCP-AK-2.1-007, R.2/IC1 Process AK Report for Special Processing at TA-55

7. TWCP-AK-2.1-009, R.0/IC1 Process AK Report for Pu-238 Operations at TA-55

8. TWCP-AK-2.1-013, R.0 AK Report for NG Waste from Nitrate Operations at TA-55

9. TWCP-AK-2.1-014,R.0 AK Report for NG Waste from Miscellaneous Operations at TA-55

10. TWCP-AK-2.1-016,R.0 AK Report for NG Waste from Special Processing Operations at TA-55

11. TWCP-AK-2.1-017,R.0 AK Report for NG Waste from Metal/Pyrochemical Operations at TA-55

"The simplest questions are the hardest to answer."
Northrop Frye

Catherine H. Smith
Project 2010
RRES-CE Certification Group
Risk Reduction & Environmental Stewardship Division
Phone: 667-0113 Page: 664-7104

LA-UR-02-1713

INTERIM CHANGE REQUEST

☑ **TWCP** ☐ **WRR** ☐ **Other** **If Other, please identify:** _____	**IC Number:** 1
Person Requesting this Interim Change: Sandy Wander	
DOCUMENT INFORMATION	
Document Title: Process Acceptable Knowledge Report for Pyrochemical Processes at TA-55	**Document No./Revision:** TWCP-AK-2.1-006,R.2/IC1 (LA-UR-1713)
Effective Date of Current Document: 05/18/01	**Document Preparer:** John Musgrave

CHANGE INFORMATION: Please ensure the following changes are made:

Section/Page	Change:	Reason/Justification:
Title Page and p. 1	Delete "Summary" from title to read: "Process Acceptable Knowledge Report for Miscellaneous Operations at TA-55"	Clarification
Global	Change all occurrences of "AK Information Summary" to "AK Information Summary"	Document title change
Note and 3rd column heading / p. vi	Delete "summary" from "NOTE" at top if page vi and from "*" note at bottom of page viii Change 3rd column heading on page vi and vii to read:"Process AK Report*" Delete entire 4th column	Clarification
RCRA Constituents/ EPA Hazardous Waste Numbers: / p. viii of viii	Change first bullet to read: "D005 (barium) applies to salt waste generated under P/S code RA discarded under P/S code OR In bullet beginning D008 (lead), add "*" after D008, and "except Neptunium after "P/S codes" and before "in pyrochemical processes"	Per SME, chemically D005(barium) would stay only in the salt which is discarded under P/S code OR, not P/S code RA. * due to typo error. Per SME, P/S code Neptunium did not generate any waste.
Global search and delete / pp. 2 and 6	From all references to "process AK summary report," delete "summary" to read "process AK report. From all titles that previously read "Process Acceptable Knowledge Summary Report, " delete "Summary" to read "Process Acceptable Knowledge Report."	Clarification
Attach. 3 / pp. 1 and 2 of 3	In timeline for OR, add D005; in timeline for RA, delete D005 Add "*D008" to PK timeline, "two asterisks" to D019 in PTP timeline and P120 in SD and SS timelines and Notes, and "D008" to SS timeline. Add "*" to D008 in footnotes.	See justification above regarding D005 to timeline for OR and deleting in RA timeline. Typo errors found upon review.

Attach. 4 / pp. 1, 2, 3, and 4 of 4	In row for OR, add D005 to "EPA Codes" column; in row for RA, delete D005 Add "*" to all P/S codes, add "P120" to ER Add "*D008 due to leaded gloves" as footnote	See justification above regarding D005 to timeline for OR and deleting D005 in RA in Attachment 4. Typo errors found upon review.
Attach. 6, pp. 1, 2	Add new Attachment 6 and update "Contents" page to reflect addition Add following paragraph to end of Section 2.0: "When discrepancies in AK information are discovered, they are documented and resolved in accordance with Acceptable Knowledge Documentation (TWCP-QP-1.1-021). The resulting documentation is found in Decision/Discrepancies Resolution Documentation (Attachment 6)."	New TWCP-QP-1.1-021 requirement

Date changes submitted: 02/12/02 **Desired effective date for changes**:

INTERIM CHANGE APPROVAL

Document Preparer: S Wander		Reviewer (if applicable): Facility Rep	
Signature: Sandy Wander	Date: 3/19/02	Signature: Wayne A. Dunyak	Date: 3/20/02
Site Project QA Officer: MA Gorrell		LAAO (if implementing WAP requirements): N/A	
Signature: MA Gorrell	Date: 3/21/02	Signature:	Date:
☑ IC Approved ☐ Major Rev. ☐ Hold for next Rev.		Do changes affect WAP data collection, data quality, or performance criteria? ☐ Yes ☑ No If yes, date of CBFO approval: _____ (documentation attached)	
Site Project Mgr/Line Mgr: P Rogers			
Signature: Pamela Rogers	Date: 3/19/02		
USQ Screener (if applicable): NA			
Signature: [illegible]	Date: 3-25-02		

NOTE: Changes can be designated on the document and attached to this form.

Effective date for this interim change: 3/21/02

TA-55 PLUTONIUM FACILITY
ACCEPTABLE KNOWLEDGE REPORT

REPORT TITLE: Process Acceptable Knowledge Summary Report for Pyrochemical Processes at TA-55

REPORT NUMBER: TWCP-AK-2.1-006,R.2 (LA-UR-01-2558)

WASTE GENERATED FROM PROCESS/STATUS CODES: CRD, ER, MO, MP, Neptunium, OR, PK, PTP, RA, SCB, SD, SS, and SSMD

EFFECTIVE DATE: 05/18/01

NEXT REVIEW DATE: 05/18/03

DOCUMENT PREPARER:

John Musgrave — 5/7/01
NAME — DATE

APPROVALS:

June Fabryka-Martin — 5/7/01
INDEPENDENT TECHNICAL REVIEWER/EDITOR — DATE

Mavis R. Lo — 5/10/01
SITE PROJECT MANAGER — DATE

Sandy Wander — 5/14/01
WASTE CERTIFICATION OFFICIAL — DATE

[illegible] — 5/14/01
SITE PROJECT QA OFFICER — DATE

Charles L. Fox — 5/7/01
FACILITY REPRESENTATIVE — DATE

© 2000, 2001 University of California

HISTORY OF REVISIONS

Revision No.	Date	Pages Revised	Reason for Change
0	07/13/00	—	New report (TWCP-03939)
1	12/04/00	All	Make report a controlled document and respond to CAR-00-036
2	05/18/01	All	Respond to CBFO comments and update to include new AK information
2/IC1	03/21/02	Title page, vi, viii, 1–5 Att. 3, 4	Clarification and update to include new information.

CONTENTS

Section **Page**

ACRONYMS iv

TA-55 PROCESS/STATUS (P/S) CODE INDEX vi

PROCESS ACCEPTABLE KNOWLEDGE SUMMARY vii

1.0 INTRODUCTION 1

2.0 METHODOLOGY USED TO SEARCH FOR AK RECORDS 1

3.0 DESCRIPTION OF THE PROCESS WASTE 3
- 3.1 Facility and Mission 3
- 3.2 Basis, Rationale, and Assumptions Used to Delineate the Waste Streams 3
- 3.3 Waste Physical Form and Content Description 4
- 3.4 Waste Volume and Time Period of Waste Generation 4
- 3.5 Waste Generation Processes 5
- 3.6 Material Inputs to the Waste Generation Process 13

4.0 ASSIGNMENT OF EPA HAZARDOUS WASTE NUMBERS 18
- 4.1 F, K, and P Listings 18
- 4.2 Toxicity Listings 18

5.0 VERIFICATION THAT IGNITABLE, REACTIVE, AND CORROSIVE WASTES WERE EXCLUDED 20

6.0 VERIFICATION THAT INCOMPATIBLE CHEMICALS WERE PROHIBITED 21

7.0 VERIFICATION THAT THERE ARE NO COMPRESSED GASES, FREE LIQUIDS, NONRADIONUCLIDE PYROPHORICS, SEALED CONTAINERS GREATER THAN FOUR LITERS IN VOLUME, OR >1% RADIONUCLIDE PYROPHORICS 22

8.0 VERIFICATION THAT THERE ARE NO POLYCHLORINATED BIPHENYLS (PCBs) IN THE WASTE STREAM 22

9.0 CITED PROCEDURES AND REQUIREMENTS DOCUMENTS 23

Tables

1 Process Feed Materials for Pyrochemical Operations 14
2 Average Isotopic Content of Plutonium Material Types and Enrichments 16
3 Chemical Inputs to Processes Described in This Report 19

Attachments

1 Acceptable Knowledge Roadmap (9 pages)
2 LANL and TA-55 Sites Maps (2 pages)
3 Timeline for Pyrochemical Processes (3 pages)
4 Process Inputs and Outputs (4 pages)
5 Simplified Process Status Diagram (1 page)
6 Decision/Discrepancies Resolution Documentation (1 page)

ACRONYMS

AK	acceptable knowledge
AK Information Summary	*Los Alamos National Laboratory Transuranic Waste Characterization Acceptable Knowledge Information Summary* (TWCP-PLAN-0.2.7-001,R.5)
CFR	Code of Federal Regulations
D	EPA hazardous waste number prefix for wastes with hazardous characteristics, defined in 40 CFR Subpart C, Sections 261.21 to 261.24
DL	discard limit
DOE	U.S. Department of Energy
DOR	direct oxide reduction (process conducted under P/S code OR)
DTP	detailed technical procedure
DWLS	Discardable Waste Log Sheet
EPA	U.S. Environmental Protection Agency
ER	electrorefining
F	EPA hazardous waste number prefix for hazardous wastes from non-specific sources, defined in 40 CFR Subpart D, Section 261.31
HEPA	high-efficiency particulate air
HWN	hazardous waste number
K	EPA hazardous waste number prefix for hazardous wastes from specific sources, defined in 40 CFR Subpart D, Section 261.32
LANL	Los Alamos National Laboratory
MCDOR	multicycle direct oxide reduction
MPL	metal preparation line
MSE	molten salt extraction
MT	Material Type
NMT	Nuclear Material Technology
OSWER	Office of Solid Waste and Emergency Response (EPA)
P	EPA hazardous waste number prefix for discarded commercial chemical products, off-specification species, container residues, and spill residues, defined in 40 CFR Subpart D, Section 261.33
P/S [code]	process/status [code]
PCB	polychlorinated biphenyl
PF-4	Plutonium Facility, Building 4
PYRO	pyrochemical [designator for individual documents in pyrohemical processes reports in Attachment 1, Acceptable Knowledge Roadmap]
QA	quality assurance
QP	quality procedure
R&D	research and development
RCRA	Resource Conservation and Recovery Act
RD&D	research, development and demonstration
RLWTF	Radioactive Liquid Waste Treatment Facility
RMDC	records management/document control
SME	subject matter expert
SOP	safe/standard operating procedure

TA	technical area
TCLP	toxicity characteristic leaching procedure
TRU	transuranic
TWCP	Transuranic Waste Characterization/Certification Program
UCNI	Unclassified Controlled Nuclear Information
WAC	waste acceptance criteria
WIPP WAC	*Waste Acceptance Criteria for the Waste Isolation Pilot Plant* (DOE/WIPP-069)
WIPP WAP	Attachment B, Waste Analysis Plan, to the *Hazardous Waste Facility Permit Issued to the Waste Isolation Pilot Plant* (EPA No. NM4890139088)
WIPP	Waste Isolation Pilot Plant
WODF	Waste Origination and Disposition Form
WPRF	Waste Profile Request form

TA-55 PROCESS/STATUS (P/S) CODE INDEX

Note: This index indicates the main process AK report and report section that covers each P/S code mentioned in this report.

P/S Code	P/S Name	Process AK Report*
CA	Casting	Metal Operation Processes
CRD	Chlorination/reduction RD&D	Pyrochemical Processes
CX	Chloride Anion Exchange	Chloride Operations
CXL	Experimental Chloride Extraction Line	Chloride Operations
DO	Dissolution of Oxide	Special Processing
DS	Ion Exchange	Nitrate Operations
ED	Cascade Dissolver	Nitrate Operations
ER	Electrorefining	Pyrochemical Processes
LR	Ion Exchange	Nitrate Operations
MA	Machining	Metal Operation Processes
MO	Metal Oxidation, Room 429	Pyrochemical Processes
MP	Metal Preparation	Pyrochemical Processes
NEPTUNIUM	Neptunium	Pyrochemical Processes
OR	Direct Oxide Reduction	Pyrochemical Processes
PK	Pickling and Nitrate Holding	Pyrochemical Processes
PTP	Plutonium Trichloride Preparation	Pyrochemical Processes
RA	Recovery of Anodes	Pyrochemical Processes
RB	Roasting and Blending	Nitrate Operations
RBJ	Roasting and Blending Jr	Nitrate Operations
SC	Cascade Dissolver, G437	Nitrate Operations
SCB	Chlorination Ca/Al Scrubbing RD&D	Pyrochemical Processes
SD	Salt Distillation	Pyrochemical Processes
SS	Salt Stripping	Pyrochemical Processes
SSMD	SS Material Development	Pyrochemical Processes
WM	Waste Management	Miscellaneous Operations

* Process AK reports: Chloride Operations (TWCP-AK-2.1-002,R.2), Metal Operation Processes (TWCP-AK-2.1-003,R.2), Miscellaneous Operations (TWCP-AK-2.1-004,R.2), Nitrate Operations (TWCP-AK-2.1-005,R.2), Pyrochemical Processes (this report), Special Processing (TWCP-AK-2.1-007,R.2)

PROCESS ACCEPTABLE KNOWLEDGE SUMMARY

Waste-generating process: Pyrochemical Processes

P/S codes: CRD, ER, MO, MP, Neptunium, OR, PK, PTP, RA, SCB, SD, SS, and SSMD

Type of waste generated:

Retrievably stored and newly generated, mixed and non-mixed pyrochemical salts and debris.

Site: LANL

Facility Mission (including defense and non-defense programs):

TA-55 has extensive capabilities for the extraction and recovery of plutonium from residues and scraps generated from operations at various LANL facilities and other DOE sites in the defense complex. The recovered plutonium is converted into pure plutonium feedstock. These manufacturing and recovery operations, as well as associated maintenance operations, and TA-55 plutonium research are the sources of TRU waste contaminated scrap, residues, and debris generated at TA-55. The scrap and residues are processed to recover as much plutonium as practicable before disposal. Wastes from pyrochemical operations are generated from plutonium metal preparation and purification for defense programs; these wastes may have been generated and produced in the same rooms as were used for non-defense activities and so were not segregated from non-defense waste until August 27, 1998.

Area(s) or building(s) where the process waste was generated (including operations carried out in those areas):

TA-55 Plutonium Facility (Building PF-4), 400 Wing. Pyrochemical operations include processes for the preparation and purification of plutonium metal.

Description of the process waste (physical form and typical content description):

Waste from pyrochemical operations consists primarily of slag containing chloride salts, calcium fluoride and calcium oxide salts; crucibles; debris waste including cellulosic, plastic, rubber, glass, and metal items. Liquid waste is sent to the Radioactive Liquid Waste Treatment Facility at TA-50.

Summary Category Groups: S3000, S5000

Waste Matrix Codes: S3100, S3200, S5100, S5300, S5400

Description of the waste-generating process:

The overall goal of the pyrochemical operations is to prepare plutonium from impure metal, metal alloys, oxides, scrap, and residues and produce a purified plutonium metal. Processes include the metal preparation line, single-pass and multicycle direct oxide reduction, electrorefining, molten salt extraction, salt stripping, salt distillation, carbonate oxidation, oxygen sparge, and pyroredox.

Process feed:

Plutonium metal, metal alloys, or oxides; plutonium scrap; Np-237 (briefly in 1993).

Radioisotopic content of the waste:

Variety of plutonium material types with different well-defined isotopic compositions. Am-241, Np-237, and U-234 may be present at detectable concentrations as decay products of their plutonium precursors. Some processes separate plutonium and americium, or plutonium and uranium, so that the waste will usually be enriched in Am-241 or U-234, but may also be depleted in some cases. Np-237 may be the dominant radionuclide in some cases. Pa-231 and Cs-137 may be present in trace amounts due to their widespread presence as contaminants in TA-55 operations.

RCRA Constituents/EPA Hazardous Waste Numbers:

- D005 (barium) applies to salt waste discarded under P/S code OR
- D006 (cadmium) and D008 (lead) apply to P/S codes ER and SS
- D006 (cadmium), D007 (chromium), D008 (lead), and D011 (silver): zinc metal waste from P/S code RA
- D006 (cadmium), D007 (chromium), D008 (lead), and D011 (silver): waste from P/S code PK
- D008* (lead): metal waste debris from all P/S codes except Neptunium in pyrochemical processes due to disposal of leaded gloves; after May 1992, leaded gloves were separated from other metal debris
- D009 (mercury): waste from P/S code SSMD during the summer of 1994
- D019 (carbon tetrachloride): waste from P/S code PTP (1986 to June 1989)
- No F or K codes
- P120 (vanadium pentoxide): waste from P/S code SD from 02/98 to 03/98; and P/S code SS from 05/27/98 to 06/10/98

Process waste volume (if known):

Waste volumes for each P/S code have not been tracked. Instead, waste items are segregated into similar material types and packaged in waste containers. Waste containers are segregated into waste streams in the AK Information Summary, and waste stream volumes are reported in that document.

Years of generation for the process waste: 1979–present

PROCESS ACCEPTABLE KNOWLEDGE REPORT FOR PYROCHEMICAL PROCESSES AT TA-55

1.0 INTRODUCTION

All transuranic (TRU) waste must be sufficiently characterized and certified before it is shipped to the Waste Isolation Pilot Plant (WIPP). The U.S. Environmental Protection Agency (EPA) allows use of acceptable knowledge (AK) for waste characterization. EPA uses the term AK in its guidance document, *Waste Analysis at Facilities that Generate, Treat, Store and Dispose of Hazardous Waste.* Attachment B, Waste Analysis Plan, to the *Hazardous Waste Facility Permit Issued to the Waste Isolation Pilot Plant* (EPA No. NM4890139088) (WIPP WAP) defines AK and provides guidelines on how AK should be obtained and documented.

This process AK report was prepared in accordance with *Acceptable Knowledge Documentation* (TWCP-QP-1.1-021). The primary purpose of this report is to systematically organize, evaluate, and summarize detailed AK information about individual processes that generate TRU waste in the Plutonium Facility at Technical Area (TA) 55, one of the TRU-waste generators at Los Alamos National Laboratory (LANL). By doing so, this report provides detailed technical support for several waste stream AK reports that include these process wastes.

2.0 METHODOLOGY USED TO SEARCH FOR AK RECORDS

The AK search for the information related to TA-55 waste streams resulting from pyrochemical processes covered:

- Review of the *Los Alamos National Laboratory Transuranic Waste Characterization Acceptable Knowledge Information Summary* (TWCP-PLAN-0.2.7-001) (AK Information Summary) that includes information regarding all TRU waste streams
- Review of documents related to waste generation and waste management activities at TA-55 as listed on the Acceptable Knowledge Roadmap (Attachment 1)
- Interviews with personnel involved with waste generation and waste management at TA-55 as listed on the Acceptable Knowledge Roadmap (Attachment 1)

NOTE: Much of the AK information related to pyrochemical processes is contained in Transuranic Waste Characterization/Certification Project (TWCP) Record No. TWCP-3542. Individual documents in this record have been assigned a separate identifier, PYRO-nn, where nn is a sequential 1- or 2-digit number. This referencing nomenclature is used throughout this report and its attachments.

- Analyses of individual processes generating waste, and evaluations of the potential for Resource Conservation and Recovery Act (RCRA)-regulated constituents to be

present in the process wastes, based on subject matter expert (SME) interviews and any relevant data

The TWCP Records Management/Document Control (RMDC) Center contains copies of the documents referenced in this report. Any Unclassified Controlled Nuclear Information (UCNI) is contained in these records, and will not be included in this report. Such records are identified as UCNI in the Acceptable Knowledge Roadmap (Attachment 1).

This process AK report is part of a set of closely related reports about TRU-waste generating activities at TA-55. For convenience in organizing AK for plutonium processing at this facility, the processes were categorized into six operational areas. The multiple processes in each area are described in detail in the following six process AK reports for plutonium:

- *Process Acceptable Knowledge Report for Chloride Operations at TA-55* (TWCP-AK-2.1-002)
- *Process Acceptable Knowledge Report for Metal Operation Processes at TA-55* (TWCP-AK-2.1-003)
- *Process Acceptable Knowledge Report for Miscellaneous Operations at TA-55* (TWCP-AK-2.1-004)
- *Process Acceptable Knowledge Report for Nitrate Operations at TA-55* (TWCP-AK-2.1-005)
- *Process Acceptable Knowledge Report for Pyrochemical Processes at TA-55* (TWCP-AK-2.1-006 [this report])
- *Process Acceptable Knowledge Report for Special Processing at TA-55* (TWCP-AK-2.1-007)

Each process AK report contains information on multiple individual processes that are assigned unique identifiers called process/status (P/S) codes. For example, pyrochemical processes include 13 individual processes that are each assigned a P/S code, as listed on the cover page of this report. The search and compilation of AK information was based on P/S code because that is the most detailed level of process information generally recorded in waste generation records. The process AK reports frequently cross-reference one another because P/S codes in one operational area often provide the material feed for P/S codes in another area. An index of P/S codes cited in this process AK report follows the list of acronyms; this index lists process descriptions and the primary process AK report in which that P/S code is discussed.

When discrepancies in AK information are discovered, they are documented and resolved in accordance with *Acceptable Knowledge Documentation* (TWCP-QP-1.1-021). The resulting documentation is found in Decision/Discrepancies Resolution Documentation (Attachment 6).

3.0 DESCRIPTION OF THE PROCESS WASTE

The following sections describe processes used in pyrochemical processes, and identify the resulting wastes as well as outputs that are sent to other operations, such as nitrate operations, for further processing.

3.1 Facility and Mission

The TA-55 Plutonium Facility (Building PF-4) recovers plutonium from scrap and residues generated throughout the U.S. Department of Energy (DOE) defense complex, and processes it into pure plutonium oxide for conversion to metal and other products. A LANL site map and a detailed map of the buildings at TA-55, including Building PF-4, are shown in Attachment 2.

Processes in pyrochemical operations were solely defense related (TWCP-614, TWCP-4162). However, wastes from various processes were not segregated by funding source, waste-generating process, or waste-generating location (e.g., room or glovebox) until recently (August 27, 1998), but rather were segregated and packaged based on waste type (TWCP-887, TWCP-4162, TWCP-4167). Consequently, a single waste container often contains wastes from multiple processes. Some debris waste was also co-mingled with room trash related to these same operations (both defense and non-defense), and was initially boxed as low-level waste. Subsequently, some of these waste boxes were returned for disposal in drums as TRU waste when on-site radioassay results showed them exceeding the low-level discard limits (TWCP-816).

3.2 Basis, Rationale, and Assumptions Used to Delineate the Waste Streams

The basis for delineation of TA-55 waste streams was established by the evolving set of LANL and TA-55 waste management plans and site-specific procedures, which date back to the start of operations at the Plutonium Facility in 1978 (TWCP-352, TWCP-697, TWCP-700, TWCP-701, TWCP-3943). The stated guidance and practice from the beginning, continuing to the present day, has been to handle and package all combustible and noncombustible debris waste in a similar fashion, regardless of the process (i.e., P/S code) of origin. Inspection, collection, documentation and packaging operations of solid, certifiable TRU wastes at TA-55 are conducted in PF-4 by a waste management section or team (TWCP-352, TWCP-700, TWCP-701, TWCP-3943). Wastes from all TRU waste-generating activities at TA-55 are handled and packaged into waste containers by this team based on the material content of the waste, without regard to P/S code. Materials are considered waste only when they have been received and processed by the waste management team.

Assignment of a particular waste container to a waste stream is then made on the basis of waste generator information compiled in the AK Information Summary. Waste generator information is reviewed to identify the types and sources of

waste items present in each drum, to evaluate the most appropriate waste summary group, waste matrix code, and potential for the presence of hazardous constituents. In the AK Information Summary, TA-55 wastes have been assigned to waste streams based on the waste segregation schemes used by TA-55:

- By radioisotope content (Pu-238 or Pu-239 material type)
- By material matrix (combustible, noncombustible, metal, glass, etc. waste types)
- By hazardous waste status (mixed, non-mixed, or special case waste streams)

3.3 Waste Physical Form and Content Description

Wastes generated during pyrochemical operations contain a variety of pyrochemical chloride salts as well as mixtures of calcium fluoride and calcium oxide salts, that were generated as byproducts of the operations and that met the discard limit for plutonium content. Debris wastes and caustic liquid wastes sent to the Radioactive Liquid Waste Treatment Facility (RLWTF) at TA-50 are also covered by this process AK report. General debris waste categories from pyrochemical processes include

- Cellulose-based waste (for example, paper, cloth)
- Plastic-based waste (for example, gloves, tape, labware)
- Rubber
- Magnesium oxide crucibles
- Metal debris (for example, tantalum crucibles, wire, hose clamps, tools, labware)
- Glass debris

These debris items are contaminated with small amounts of radioactive and chemical substances from pyrochemical processes.

3.4 Waste Volume and Time Period of Generation

This report covers waste streams generated from 1979, when pyrochemical processes first began in Building PF-4, to the present. Wastes from the pyrochemical processes have different associated EPA hazardous waste numbers (HWNs) depending on the time period during which they were generated. The P/S codes, their time period of generation, and corresponding RCRA codes are shown graphically in Attachment 3, Timeline for Pyrochemical Processes.

Waste volumes for each P/S code have not been tracked. Instead, waste items are segregated into similar material types and packaged in waste containers. Waste containers are assigned to waste streams in the AK Information Summary, and waste stream volumes are reported in that document.

3.5 Waste Generation Processes

The following subsections describe the generation of waste by pyrochemical processes, as well as product and waste outputs to other processes or operations.

Manufacturing and research operations performed at TA-55 results in the production of plutonium-contaminated scrap and residues. These residues are processed to recover as much plutonium as is practical (TWCP-352). TA-55 has extensive capabilities for the extraction and recovery of plutonium from residues and scraps generated from operations at various LANL facilities. The metal production and purification operations as well as associated maintenance operations are the sources of most TRU waste generated from pyrochemical processing. Detailed background information about the TA-55 plutonium recovery processes can be found in *Waste from Plutonium Conversion and Scrap Recovery Operations* (TWCP-352 and TWCP-886).

This report focuses on metal preparation and purification processes (pyrochemical processes). Pyrochemical operations for plutonium include the following processes:

- metal preparation line (MPL) (P/S code MP),
- single-pass direct oxide reduction (DOR) and multiple-cycle direct oxide reduction (MCDOR) with in-situ regeneration (P/S code OR),
- electrorefining (ER) (initially P/S code ER; but now part of P/S code SS),
- molten salt extraction (MSE) (P/S code SS),
- salt stripping (salt stripping, salt distillation, carbonate oxidation, and oxygen sparging) (P/S code SS),
- pyroredox (P/S code RA),
- pickling (P/S code PK) and metal oxidation (P/S code MO).

NOTE: In contrast with most P/S codes, P/S code SS has grown over the years to encompass several activities that are different steps in the metal refining process, rather than representing a single distinct operation. As such, discussion of this P/S code is covered under more than one subsection.

Several research and development (R&D) processes also took place in pyrochemical operations:

- Chlorination/Reduction R&D (P/S code CRD),
- Chlorination Ca/Al Scrubbing R&D (P/S code SCB) (PYRO-24/ TWCP-3542), and
- Salt Stripping Materials Development (P/S code SSMD) (PYRO-22/TWCP-3542).

Each of these processes is described below. A complete listing of P/S codes for pyrochemical processes, their descriptions, feed materials, and inputs and outputs is found in Attachment 4. A simplified process flow diagram for pyrochemical processes is found in Attachment 5.

3.5.1 Metal Preparation Line (P/S code MP)

The MPL (conducted under P/S code MP) produced plutonium metal from PuF_4 until 1992 (TWCP-352, TWCP-2539). Plutonium oxides derived from the calcination of oxalate or peroxide precipitates (in nitrate operations) were reacted with hydrogen fluoride gas to form plutonium tetrafluoride. Because the plutonium oxide feed material had been purified in previous aqueous processes, it contained less than trace amounts of RCRA-regulated metal impurities. Input material came from the vault or P/S codes RB or RBJ (in nitrate operations). In the metal production process, plutonium oxide was converted to plutonium tetrafluoride, which in turn was reacted at high temperature (600 °C to 2000 °C) with metallic calcium in a magnesium oxide crucible. Iodine was added as a reaction initiator. The desired product was plutonium metal, which was recovered as a button by breaking the crucible and mechanically separating the contents. The metal was transferred to P/S codes SS or CA or sent to the vault.

The waste products were calcium fluoride (CaF_2) and calcium iodide (CaI_2), which formed a slag, magnesium oxide sand, and magnesium oxide crucible pieces. These were discarded under P/S code MP if the plutonium content was below the discard limit (DL). If the plutonium content was above the DL, the slag and crucible pieces were sent to nitrate operations (*Process Acceptable Knowledge Report for Nitrate Operations at TA-55* [TWCP-AK-2.1-005]) to be dissolved in nitric acid (HNO_3) and aluminum oxide (Al_2O_3). The leached materials were then discarded under P/S codes ED or SC, with the waste described as leached solids. The leachate was also treated in nitrate operations under P/S code DS to recover the plutonium. The magnesium oxide sand was reused if possible.

Little or no purification of the plutonium occurred during this process. However, because the reagents introduced no impurities and the highest purity feed material was used, the resulting metal was often satisfactory for high-purity applications. In this process, any trace metals were below the toxicity characteristic levels, so that the associated debris and slag wastes were below the toxicity characteristic levels in RCRA metal content (TWCP-2502).

3.5.2 DOR and MCDOR (P/S codes OR and SCB)

Prior to the multiple-cycle DOR process, a single pass DOR process was used for plutonium oxide (TWCP-2507, PYRO-14/TWCP-3542). Plutonium oxide and calcium metal are reacted in molten calcium chloride ($CaCl_2$) or $CaCl_2$ mixed with calcium fluoride (CaF_2), to produce plutonium metal. The reaction is conducted in a magnesium oxide (MgO) crucible at 820°C to 875°C. Any arsenic, mercury or selenium present in the impure plutonium oxide would be driven off due to their volatility at this high temperature (TWCP-1258). The reaction proceeds to completion when excess calcium is present and when sufficient $CaCl_2$ is available to dissolve the calcium oxide (CaO) product.

After cooling, a plutonium metal button is removed by breaking the crucible. A layer of salt above the button contains unreacted oxide and metal shot, which was sometimes recovered by addition of fresh salt plus additional calcium metal. The process was then rerun. If the unreacted oxide and metal shot did not process after the second run, the material was sent to aqueous recovery. The product plutonium metal contains significant impurities, including additional metal impurities derived from the calcium metal and calcium chloride reagents. It must be further purified by ER. All DOR salts were oxygen sparged, which would have oxidized any pyrophoric metals that might have been present. The salt is then either routed through aqueous chloride operations to recover the plutonium, or else discarded as waste along with the remaining calcium metal and MgO crucible pieces. After May 1987, spent salts above the DL were sent to controlled oxidation to oxidize the pyrophoric metals.

The feed oxide, reagent salts and reductant are of the highest purity available because the process is non-purifying. In fact, the plutonium metal produced from this operation is always less pure than the feed material due to impurities derived from the reductants. Plutonium metal from this process typically requires further processing to meet purity requirements.

To minimize the salt waste, the MCDOR process was started in 1988 (TWCP-2502, PYRO-16/TWCP-3542). In this process, the molten salt is regenerated by sparging the $CaCl_2$-CaO mixture with chlorine gas between multiple plutonium metal production runs. After approximately five cycles of metal production, the mixture is cooled and the salt and metal phases are separated. The salt is chlorinated and reused for MCDOR. The salt is discarded under P/S code OR if the plutonium concentration is below the DL. The salts above the DL are returned to P/S code CXL for dissolution and recovery. Before 1987, the salts may have been discarded under P/S code OR or routed to chloride operations. The chlorine off-gas is passed through a caustic scrubber, with the caustic solution going to the RLWTF at TA-50 for disposal if the solution meets this facility's Waste Acceptance Criteria (WAC). If the solution does not meet the WAC, it is returned to P/S code CXL for additional treatment.

MCDOR process inputs are low in contaminants. Only high-purity reagent chemical salts are used in the process, and the plutonium oxide feed materials are also of high purity, with absorbed water being the main impurity. MCDOR metal feed material analytical samples were analyzed for cadmium, chromium, lead, and silver. A review of 100 analyses showed that, even in the most impure sample, these D-listed toxicity characteristic metals were well below RCRA regulatory limits (TWCP-2540), as follows:

Metal	**Totals Analysis**	**Calculated TCLP Result**	**Regulatory Level**
Cadmium	<10 ppm	<0.5 mg/L	1 mg/L
Chromium	30 ppm	1.5 mg/L	5 mg/L
Lead	20 ppm	1 mg/L	5 mg/L
Silver	2 ppm	0.1 mg/L	5 mg/L

All metal impurities except barium would be reduced to the metal state and remain with the plutonium metal phase rather than be transferred into the molten salt phase. Hence, the molten salt phase is purified of regulated metals except for barium. These regulated metals will be present in the waste salt at levels below the toxicity characteristic levels. Because the salts are reused, only the initial reduction in fresh salt would contain any of the salt feed impurities.

The waste salt, crucibles, and debris waste items associated with this process are discarded under P/S codes OR or CXL. Asbestos gloves

were also used in glovebox operations under P/S code OR, and were disposed as part of ceramic and glass debris wastes.

P/S code SCB was an R&D effort examining the feasibility of this process at extracting Pu (MT 52) from salt before discarding the salt. Pu was chlorinated then reduced to the metal with calcium metal (similar to DOR).

3.5.3 Molten Salt Extraction (P/S code SS)

MSE is used to separate americium and the more reactive elements such as rare earth elements, alkali metals, and alkaline earth metals from plutonium metal (PYRO-4/TWCP-3542, TWCP-352). This process is employed only if the americium content is greater than 1000 ppm (TWCP-2506). In the original process, which operated from 1979 to 1988, magnesium chloride ($MgCl_2$) was added to the impure plutonium metal in a molten salt of sodium chloride (NaCl) and potassium chloride (KCl), contained in a MgO crucible and heated to 750°C. The magnesium chloride oxidized americium to $AmCl_3$, although some plutonium was also converted to the chloride salt form. In 1988, the MSE process was converted to use plutonium chloride ($PuCl_3$) produced by in-situ chlorination in a tantalum crucible. In the LANL process, 90 percent of the americium and 10 percent of the plutonium are transferred from the feed metal to the salt. After cooling, the salt and metal are mechanically separated. The salts are transferred to the salt stripping process under P/S code SS.

In the late 1980s, several chloride salt systems were studied, including lithium chloride (LiCl), potassium chloride (KCl), calcium chloride ($CaCl_2$), and $NaCl/CaCl_2$.

3.5.4 Electrorefining (currently part of P/S code SS, historically P/S code ER)

The ER process was introduced in 1962 at TA-21 and was moved to TA-55 in 1979. This process takes impure metal from the MSE and MCDOR (DOR) processes and produces high purity plutonium metal (PYRO-2, PYRO-3, PYRO-4, PYRO-6, PYRO-17 [all in TWCP-3542], TWCP-2505). Impure plutonium is cast as an anode, which is then placed in a magnesium oxide crucible with a salt mixture, a metal cathode (typically tungsten), and a seeding reagent that is $MgCl_2$ or $PuCl_3$ (TWCP-2505). After the anode and salt melt, current is applied to the system, and plutonium at the anode is oxidized to plutonium ions, which travel to the cathode and are reduced back to the metal state. Impurities in the original plutonium anode that are easier to be reduced than plutonium (including cadmium, chromium, lead, and silver) remain in the anode, while impurities easier to be oxidized than plutonium

(including barium) are left in the molten salt. After cooling, the crucible is broken and the residues are physically separated from the high purity product metal. Anode heels were sent to pyroredox (P/S code RA) from 1984 to 1986. Currently, salts are sent to P/S code CXL (chloride operations) or carbonate oxidation/distillation (section 3.5.5).

From 1987 to 1989, secondary solvent metals such as cadmium, bismuth, lead, and gallium were added to experimental studies of the electrorefining process (PYRO-15/TWCP-3542). The salts and crucibles from those ER runs may be contaminated with additional cadmium and lead, although those metals should have remained in the anode heels. However, these particular anode heels are retained in the vault at TA-55, with no plans to reprocess them in the near future. Crucible wastes were discarded under P/S code SS. Salts are stored in the vault; very little salt from this process met the DL.

3.5.5 Salt Stripping (P/S codes SD and SS)

The MSE and ER salts are further treated by salt stripping, oxygen sparging or carbonate oxidation, and salt distillation (PYRO-7, PYRO-8, PYRO-9, PYRO-10 [all in TWCP-3542], TWCP-2498). The salt stripping process treats the residue by melting and stirring the salt with calcium metal in a magnesium oxide crucible at 850°C (TWCP-2502). This treatment reduces the plutonium in the salt to metal and allows the metal to coalesce for physical removal and recovery. After cooling, the crucible is broken and the metal physically separated and recycled to the ER process or burned to oxide and sent back through aqueous recovery. The crucible shards are transferred to P/S code CXL, leached in hydrochloric acid, then discarded under CXL. During the salt stripping, the RCRA-regulated metals, except for barium, will be reduced with plutonium into the metal product, so that the salt is essentially free of heavy metals but may still contain barium, although this element is unlikely to be present above RCRA threshold levels.

Oxygen sparging and, since 1996, carbonate oxidation are used to ensure that any plutonium, americium, or metallic sodium or potassium left in the salts are converted to nonpyrophoric oxide forms. The NaCl/KCl salt is either discarded under P/S code SS or distilled for recycle and discarded under P/S codes SS or SD. $CaCl_2$ salts are routed to aqueous chloride processing for further plutonium recovery before being discarded under P/S code CXL.

Vanadium pentoxide (V_2O_5) was used in place of carbonate to convert metals to oxide as part of the salt stripping process for a few months in 1998. V_2O_5 was used in experiments under P/S code SD from early February to early March of 1998 and under P/S code SS from May 27 to

June 10 of 1998 (PYRO-27/TWCP-3542). Molybdenum oxide was used for the same purpose during the same period of time.

Salt distillation, begun in 1997, allows the recovery of plutonium oxide from the salt and produces purified salt for reuse (PYRO-23/TWCP-3542, TWCP-2498]). NaCl/KCl salt is distilled at 850°C. Process wastes from the salt distillation are the bottoms from the distillation, which are composed of metal oxides, including any RCRA heavy metals originally present in the salt. These metal oxides are rerouted for plutonium recovery. The purified salts are reused or discarded under P/S code SD or SS. However, at the present time salt distillation is on hold awaiting the installation of a new still (PYRO-18/TWCP-3542). In the meantime, the salts and crucibles from ER and MSE are dissolved in P/S code CXL.

3.5.6 Pyroredox (P/S code RA)

The pyroredox operation was used to recover plutonium from spent anode heels in the mid to late 1980s (TWCP-2541). The anode heel was polished with calcium metal to remove surface oxide, then oxidized to plutonium (III) with zinc chloride ($ZnCl_2$) in molten KCl, forming plutonium chloride ($PuCl_3$). Elements more electroactive than zinc (including barium) were oxidized into the salt phase, and the zinc formed a metal button. Any of the residual RCRA-regulated heavy metals that may have been present in the spent anode heel (barium, cadmium, chromium, lead, and silver), with the exception of barium, would be present in the zinc button. The salt was then mixed with calcium metal in $CaCl_2$ to reduce the plutonium to the metal phase, as well as reducing all elements less electroactive than calcium. The salt phase containing small amounts of the impurity barium was mechanically separated from the metal phase and discarded under P/S code RA. The metal phase containing zinc was placed in the vault or further treated (TWCP-2540), and the plutonium eventually was routed back to ER. In the ER process, the RCRA-regulated metals are concentrated in the anode heel, which then may be treated in the pyroredox process to transfer these RCRA metals to the zinc button, or may be roasted in air to form metal oxides and then be dissolved in nitrate operations. Thus, the zinc button output could contain RCRA-regulated heavy metals (D006, D007, D008, D011) above the toxicity characteristic limits. Salt waste could contain barium (D005) above the limit.

3.5.7 Ingot Casting (P/S code SS)

Metal is melted in an MgO crucible to cast the ingot. If the plutonium content of the crucible is greater than the DL, the crucible goes to CXL

for plutonium recovery. If its plutonium content is less than the DL, the crucible is discarded under P/S code SS.

3.5.8 Metal Coalescence (P/S code SS)

Metal coalescence is used for plutonium turnings to coalesce the turnings into a metal button. Calcium metal and $CaCl_2$ are added to a MgO crucible along with the turnings and melted. Turnings may contain Freon from the machining process, but any Freon would be destroyed and volatilized by the high temperatures. Residues are handled in the same manner as MCDOR/DOR residues (section 3.5.2). Metal coalescence is conducted under P/S code SS.

3.5.9 Metal Oxidation (P/S code MO)

Small pieces of metal remaining on furnace or crucible surfaces are collected for conversion to the oxide phase in P/S code MO. These metal pieces are placed in a furnace for the conversion process. The oxide is then transferred to the vault (PYRO-11/TWCP-3542).

3.5.10 Neptunium (P/S code Neptunium)

A campaign to work off neptunium residues stored in the vault was undertaken in 1993 (PYRO-21/TWCP-3542). This operation was only active during 1993. Any debris wastes generated from this operation would carry the P/S code Neptunium. SME information indicates that wastes generated under P/S code Neptunium would not contain RCRA-listed constituents nor would they have any RCRA hazardous characteristics (PYRO-21/TWCP-3542).

3.5.11 Pickling and Nitrate Holding (P/S code PK)

Pickling (i.e., leaching metal with a strong acid) is typically a head-end operation. However, P/S code PK is included in this report because, after a few furnace runs, plutonium metal begins to accumulate on tools and furnace parts. It then becomes necessary to leach the plutonium from these items. In addition, after calcium metal reduction processes such as the metal preparation line (section 3.5.1), direct oxide reduction (section 3.5.2), and molten salt extraction (section 3.5.3), plutonium metal will have an adherent skin of calcium metal. Hydrochloric acid is used to dissolve Pu from tantalum furnace parts, and nitric acid is used to pickle Pu from other metals. The plutonium-bearing leachate solution is transferred to P/S codes CX or CXL in chloride operations, or to P/S code LR in nitrate operations (PYRO-12/TWCP-3542). P/S code PK has not been active since 1992 and may have been incorporated into P/S code SS at that time (PYRO-28/TWCP-3542). Due to the potential for

leaching heavy metals from the items treated, D006 (cadmium), D007 (chromium), D008 (lead), and D011 (silver) are assigned to waste produced from P/S code PK

3.5.12 Plutonium Trichloride Preparation (P/S code PTP)

P/S code PTP was an intermediate process used in Pu metal production (PYRO-13/TWCP-3542). Under this code, carbon tetrachloride was used to prepare plutonium trichloride by bubbling a carrier gas through carbon tetrachloride and passing the mixed gas stream through a bed of plutonium oxide at 500°–600°C before being absorbed in a 5–6 molar potassium hydroxide solution. The scrubber solution went in the caustic waste line to the RLWTF at TA-50. The carrier gases were argon, hydrogen chloride gas, and chlorine gas. The carbon tetrachloride was broken down into phosgene, carbon monoxide, and carbon dioxide gases in this process, which was active between January 1987 and June 1989, at which time the process switched to the use of phosgene gas until the process ended in May 1991.

Feed material for P/S code PTP was high purity oxides from the vault or from P/S codes CA and MA. The product plutonium trichloride was sent to P/S code SS to be reduced to metal by the MSE or ER processes.

3.6 Material Inputs to the Waste Generation Process

Attachment 4 lists P/S codes for pyrochemical processes at TA-55, including process descriptions, feed material, other process inputs, process outputs, and type of waste. The feed materials for pyrochemical processes consist of the general types of materials listed in Table 1 that are obtained either from the storage vault, as process output from other P/S codes, or from sources outside TA-55, including other DOE sites.

The remainder of this section summarizes the nature of the process waste in terms of its physical, chemical and radioisotopic characteristics.

3.6.1 Physical Waste Form Identification

Solid waste from pyrochemical processes primarily consists of spent salts, magnesium oxide crucibles, and debris waste. Debris waste contains glassware, plastics, ceramic materials, paper, rags, high-efficiency particulate air (HEPA) filters, metal containers, and small tools. Asbestos and leaded gloves may also be generated as process

Table 1. Process Feed Materials for Pyrochemical Operations

Feed Materials	Potential Presence of RCRA-Regulated Substances	P/S Codes in Pyrochemical Processes
Anode heels from P/S codes ER or SS (electrorefining step)	Typically contaminated with RCRA-regulated heavy metals Cd, Cr, Pb and Ag (D006, D007, D008, D011). Heavy metals As, Hg, and Se are not present because they are volatilized from the Pu oxide feed at the high temperatures to which this material is subjected in P/S codes ER, RM, and SS (electrorefining step).	ER, RA, SS
Miscellaneous materials with Pu contamination	Typically contaminated with RCRA-regulated heavy metals Cd, Pb, Hg, Ag and possibly Cr (D006, D008, D009, D011, and D007)	MO: Pu scrap and crucible pieces from P/S code SS PK: hardware, metal, anode chips from other P/S codes
Neptunium residues from vault	No RCRA-regulated substances	Neptunium (only active in 1993)
Pu chlorides and fluorides from various P/S codes	Variable purity; may or may not contain RCRA-regulated substances	ER, SD, SS
Pu metal or metal alloy from vault or from various P/S codes	High purity, no RCRA-regulated substances, unless noted otherwise	CRD (variable purity), MO, SCB, SS, SSMD
Pu oxalates	Typically fairly pure, no RCRA substances present	MP
Pu oxides from vault or from P/S codes CA, MA, RB, or RBJ	High purity oxides from P/S codes CA and MA. Variable purity oxides from P/S codes RB and RBJ; suspect contaminated with RCRA-regulated heavy metals Cd, Cr and Pb (D006, D007, D008).	MP (generally high purity), OR (variable purity), PTP (generally high purity)

waste. Prior to 1987, leaded gloves were discarded in the combustible and non-combustible debris waste streams. Between 1987 and May 1992, leaded gloves were segregated from combustible debris and discarded in the metal debris waste stream because of concern that explosive lead oxides might form if the combustible debris waste was incinerated. Since May 1992, leaded gloves have been routinely segregated from other metal debris waste and assigned to a separate leaded-glove waste stream.

Because items from several different processes are usually combined into individual waste drums, the physical waste form of each drum must be determined independently. This information is documented on a Waste Origination and Disposition Form (WODF) by the waste generator according to controlled procedures. The P/S code for each waste item is also documented on this form. In the packaging process, a standard form, the Discardable Waste Log Sheet (DWLS), was used to list each item identifier code and record its matrix material. This form was signed by the waste packager, reviewed, and approved by quality assurance (QA) personnel. Example forms for one drum of waste generated by pyrochemical processes can be viewed in record TWCP-2513.

3.6.2 Radionuclide Content Identification

The primary plutonium material type inputs for plutonium feed materials at Building PF-4 are listed in Table 2. The designation *material type* (MT) (e.g., MT 52) is used within the DOE Complex to describe the isotopic composition of common blends of radioactive materials used within the Complex. The material type notation was developed because it is a convenient way to describe material types that have very consistent isotopic compositions. Table 2 indicates the isotopic composition of the material types at the time the waste was characterized.

The material type provides the basis for estimating an upper bound for U-234, U-235, and Am-241 contents based on the rate of decay of their precursors, Pu-238, Pu-239 and Pu-241, respectively. The purpose of such bounding calculations is to provide a basis for identifying significant enrichment or depletion of one radionuclide versus another, based on radioassays of individual waste containers. The results of these calculations are tabulated in the last three columns of Table 2. The calculations assume that (a) none of these isotopes were initially present in the material, (b) the oldest plutonium material in inventory dates back to 1 January 1960, and (c) the waste was packaged on 1 January 1996, making it 36 years old at that time (TWCP-698)

Table 2. Average Isotopic Content of Plutonium Material Types and Enrichments

Material Type (MT)	Plutonium Isotope Wt.% and Half-Life						Upper Bounds for Dimensionless Weight Ratios[a]		
	Pu-238 (87.74 yr)	Pu-239 (24120 yr)	Pu-240 (6564 yr)	Pu-241 (14.35 yr)	Pu-242 (376,300 yr)	Pu-244 (8.26 x 10^7 yr)	U-234/ Total Pu	U-235/ Total Pu	Am-241/ Total Pu
MT 51	0.006	96.77	3.13	0.076	0.018	—	1×10^{-5}	0.001	0.0006
MT 52	0.01	93.78	6	0.2	0.02	—	2×10^{-5}	0.001	0.002
MT 53	0.03	91.08	8.45	0.366	0.071	—	7×10^{-5}	0.0009	0.003
MT 54	0.046	87.42	11.5	0.81	0.22	—	0.0001	0.0009	0.007
MT 55	0.06	83.88	14.73	1.03	0.304	—	0.0002	0.0009	0.009
MT 56	0.061	81.9	16.51	1.18	0.355	—	0.0002	0.0009	0.01
MT 57	0.433	74.63	20.7	2.55	1.69	—	0.001	0.0008	0.02
MT 42									
84%	1.02	1.37	10.32	3.13	84.14	0.02	0.003	1×10^{-5}	0.03
90%	0.72	1.26	6.4	1.86	89.77	—	0.002	1×10^{-5}	0.02
95%	0.45	0.56	2.47	0.906	95.58	0.029	0.001	6×10^{-6}	0.008
MT 83									
83%	83.89	13.8	1.9	0.32	0.09	—	0.26	0.0002	0.003
89%	89.26	10.07	0.633	0.021	0.015	—	0.28	0.0001	0.0002

[a] These ratios are calculated under the assumption that no chemical fractionation occurs and, hence, are intended to be used to identify fractionation when it is present by comparing these upper bounds to radioassay data.

Source: TWCP-698

The results of these calculations are also tabulated in Table 2, assuming (a) none of these isotopes were initially present in the material, (b) the oldest plutonium material in inventory dates back to 1 January 1960, and (c) the waste was packaged on 1 January 1996, making it 36 years old (TWCP-698).

The material type used in the process generating each waste item was documented on the WODF and DWLS. However, some of the plutonium recovery processes separate plutonium and americium, or plutonium and uranium, so that their relative ratios may be altered in the process outputs and wastes. Waste items may be either depleted or enriched in americium depending on whether the source of contamination is the process product or the process residues (TWCP-882).

Residues submitted for reprocessing often contain Np-237, the decay product of Am-241 (half-life, 458 yr). This radioisotope is expected to be present in minor amounts in nearly all debris waste from pyrochemical processes at TA-55, and may be enriched in some cases, such as in MSE process waste from P/S code SS from 1992 to the present (TWCP-882). Am-241, Am-243, and Np-237 are present as secondary radionuclides in process waste from P/S code SS from 1984 to 1990 (TWCP-882). Np-237 is expected to be the dominant radionuclide in waste from P/S code Neptunium.

In general, uranium and its isotopes are expected to be present only at trace levels, if at all. U-238 would only be present if purposefully added to the feed material. U-235 ingrowth from the decay of plutonium-239 (half-life, 24,120 years) would be negligible due to the long half-life of Pu-239. U-234 would be present in MT 83 as a decay product of Pu-238 (half-life, 87.74 years). After 20 years, 14.6 percent of the initial Pu-238 would have decayed to U-234. For MT 83 with an initial content of 83.89 percent Pu-238, the atomic ratio U-234 to total plutonium would be about 0.14. Pa-231 and Cs-137 may be present in trace amounts because of their widespread presence as contaminants in TA-55 operations (TWCP-5164, TWCP-5165).

During TWCP characterization, the contents of each waste package undergo non-destructive analysis to provide detailed radioisotopic data. These data will be used to evaluate the accuracy of AK information in accordance with *Waste Characterization Data Reconciliation with Acceptable Knowledge* (TWCP-DTP-1.2-064). If warranted, this AK report will be updated to incorporate the results of these comparisons.

3.6.3 Chemical Content Identification

Chemical inputs to pyrochemical processes are listed in Table 3. The use of strong acids, bases, or oxidizers does not result in RCRA listings for solid wastes from these processes because of the absence of free liquids in this waste. However, D006, D008, D009, D019 and P120 codes apply to some of the pyrochemical process wastes, as noted in Table 3.

4.0 ASSIGNMENT OF EPA HAZARDOUS WASTE NUMBERS

The assignment of EPA hazardous waste numbers (HWNs) to process wastes from pyrochemical operations is summarized below, as well as on the process timelines in Attachment 3, and the table of process inputs and outputs in Attachment 4. These assignments take into account the possible presence of RCRA chemicals in process waste as a result of their suspected or known presence in feed materials, chemical inputs, equipment, and glovebox surfaces.

4.1 F, K, and P Listings

P120 (vanadium pentoxide) applies to waste generated under P/S code SD from February to March 1998, and under P/S code SS from May 27, 1998 to June 10, 1998. To be conservative, this HWN is assigned to waste containers with packaging dates extending to the end of December 1998 (TWCP-5372).

No F or K codes apply to solid wastes generated by pyrochemical processes. Although used for cleaning metal parts, Freon would not be present in the waste because the parts were air-dried. Carbon tetrachloride was used as a chlorination reagent, and not as a solvent. No K-listed chemicals were present in the feed materials, chemicals or equipment used in these processes.

4.2 Toxicity Listings

No D001 (ignitable), D002 (corrosive), or D003 (reactive) listings apply to solid wastes from pyrochemical processes because no ignitable chemicals were used in these processes and because the solid wastes do not contain any free liquids (see Section 5.0).

D005 (barium) applies to salt waste generated under P/S code RA.

D006 (cadmium), D007 (chromium), D008 (lead), and D011 (silver) are assigned to the zinc metal waste produced from P/S code RA. In the ER process, these RCRA-regulated heavy metals concentrate in the anode heel, which then may be treated in the pyroredox process (P/S code RA) to transfer them to the zinc button, or may be roasted in air to form metal oxides and then be dissolved in nitrate operations. Thus, only the zinc button output could contain RCRA-regulated metals above the toxicity characteristic limits.

Table 3. Chemical Inputs to Processes Described in This Report

Chemical Input	P/S Codes in Which RCRA-Listed Chemical Is Used	Comments on Applicability of RCRA HWNs (if any)
Gases		
Chlorine gas Hydrogen chloride Hydrogen fluoride Phosgene gas		D001 and D002 do not apply to these gases because there are no free liquids in this waste. Also the gas cylinders are outside the building, and the gases are plumbed into the glovebox. D003 does not apply to phosgene because any excess chemical was passed through a solution of sodium hydroxide or potassium hydroxide, thereby producing a chloride salt solution.
Acids		
Hydrochloric acid Nitric acid		D002 does not apply to the solid wastes because there are no free liquids in this waste
Bases		
Potassium hydroxide Sodium hydroxide		D002 does not apply to the solid wastes because there are no free liquids in this waste
Inorganic chemicals		
Aluminum oxide Calcium chloride Calcium fluoride Iodine Lithium chloride Molybdenum oxide Potassium chloride Sodium chloride		
Vanadium pentoxide	SD, SS	P120 applies to waste generated under P/S code SD from February to March 1998, and under P/S code SS from May 27, 1998 to June 10, 1998
Zinc chloride		
Metals		
Bismuth metal		
Cadmium metal	ER, SS	D006 applies to a limited number of anode heels produced in P/S codes ER and/or SS using cadmium as a solvent. However, these heels are in the vault, with no plans to purify them in the near future.
Calcium metal		
Gallium metal		
Lead metal	ER, SS	D008 applies to a limited number of anode heels produced in P/S codes ER and/or SS using lead as a solvent. However, these heels are in the vault, with no plans to purify them in the near future
Mercury metal	SSMD	D009 applies to P/S code SSMD, in which it was used for about one week in the summer of 1994.
Organic chemicals		
Carbon tetrachloride	PTP	D019 applies to P/S code PTP in which this chemical was used between 1/87 and 6/89. F002 does not apply because carbon tetrachloride was used as a chlorination reagent, not as a solvent.
Freon	SCB	F002 does not apply to debris waste from P/S code SCB. While freon may have been used to clean parts (PYRO-24/TWCP-3542), the parts were air dried , and no free liquids are present in the waste.

D006 (cadmium), D007 (chromium), D008 (lead), and D011 (silver) are assigned to waste produced from P/S code PK.

D006 (cadmium) and D008 (lead) apply to waste from P/S codes ER and SS due to their use as secondary solvent metals.

D008 (lead) is assigned to metal waste debris from all P/S codes in pyrochemical processes due to the disposal of leaded gloves. Prior to May 1992, leaded gloves were disposed as metal debris without otherwise being segregated. Since May 1992, however, these gloves have been routinely segregated from other metal debris although they are still discarded under the originating P/S code (TWCP-4166).

D009 (mercury) is assigned to wastes generated under P/S code SSMD during the summer of 1994, when a week-long set of experiments contacted small amounts of plutonium with mercury (under 10 grams) (PYRO-22/TWCP-3542). At the end of these experiments, the mercury was solidified to allow disposal.

D019 (carbon tetrachloride): Until sample analyses become available, debris waste items from P/S code PTP (1986 to early 1988) are conservatively assigned D019 although the carbon tetrachloride was probably destroyed in the process.

5.0 VERIFICATION THAT IGNITABLE, REACTIVE, AND CORROSIVE WASTES WERE EXCLUDED

According to the WIPP WAP, "The prohibition of liquids and containerized gases prevents the shipment of corrosive, ignitable, or reactive wastes." Administrative controls on waste packaging were in place at various times to ensure the absence of such items from the waste stream.

- Liquids were prohibited from solid waste streams at TA-55 when the facility opened in January 1978. A waste management procedure written to cover operations at the new facility, *TA-55 Standard Operating Procedure (SOP) 406-GEN-R00*, stated that "Liquids are not permitted in any container of solid waste materials" (TWCP-3943).

- Chemical Waste Disposal Requests introduced in June 1980 included checkboxes that the waste generator was required to check if the waste contained corrosive acids or bases, or pyrophoric, flammable, corrosive, explosive, toxic, carcinogenic or highly reactive materials.

- The Certification Plan (TWCP-697) and related Generator Attachments (TWCP-701) were implemented in 1987. Waste generators were required to sign a statement on the WODF documenting that the waste contained "no free liquids, pyrophorics, explosives, compressed gases, powders or materials other than the indicated matrix." Checkboxes were also present for indicating the presence or absence of corrosive chemicals. Full implementation of this generator statement occurred in May 1987.

- Waste management inspectors perform visual verification of the waste prior to its initial packaging, thus allowing the inspectors to verify the generator's WODF statement (TWCP-701, Sections 3.8.5 to 3.8.6).

- In addition to the above-mentioned prohibitions on explosives in wastes, explosives were prohibited from TA-55 until installation of the Impact Test Facility in the early 1990s. Explosives continue to be banned in the solid waste streams up to the present time. If a misfire should occur, the requirement is to destroy the unspent powder by burning (TWCP-4720).

- The Waste Profile Request Form (WPRF), which has been in use at LANL since 1991, includes a statement which must be authenticated by the waste generator, that the waste is not ignitable (flash point >200 °F), reactive, or corrosive.

- The TA-55 Generator Attachments to the Certification Plan were updated in 1995 (TWCP-700) but the prohibition on liquids in the waste, and the waste management inspection, remained in effect.

Hence, since the inception of operations at TA-55, corrosive and reactive wastes have been excluded from TA-55 solid wastes through the prohibition of liquids. Corroborative data are provided by screening tests on similar pyrochemical salts and residues (which contain higher amounts of plutonium) at the Rocky Flats Environmental Technology Site (TWCP-2501, page WF-34-10). These tests yielded liquid with pH greater than 3, so the wastes cannot be considered corrosive, and demonstrated that the liquid does not corrode steel at a rate greater than 0.25 inch per year.

The absence of these prohibited items is verified through radiography of each waste container and visual examination of selected containers during TWCP characterization activities. These data will be used to assess the accuracy of AK information in accordance with *Reconciliation of Visual Examination and Radiography Information* (TWCP-QP-1.1-028). Any free liquids are remediated, or the container is tagged as non-compliant by filing a Prohibited Waste Report in accordance with *Nonconformance Reporting and Tracking* (TWCP-QP-1.1-007).

6.0 VERIFICATION THAT INCOMPATIBLE CHEMICALS WERE PROHIBITED

Section 5.0 summarizes administrative controls in place at TA-55 that prohibit incompatible chemicals in the waste, and measures taken to verify their absence. In addition, all waste containers shipped from TA-55 to TA-54 for storage were evaluated for potentially incompatible chemicals in accordance with 49 *Code of Federal Regulations* (CFR) Subpart C—Segregation and separation chart of hazardous materials; Section 177.848, Segregation of hazardous materials, and were determined to be in compliance with this requirement.

7.0 VERIFICATION THAT THERE ARE NO COMPRESSED GASES, FREE LIQUIDS, NONRADIONUCLIDE PYROPHORICS, SEALED CONTAINERS GREATER THAN FOUR LITERS IN VOLUME, OR >1% RADIONUCLIDE PYROPHORICS

Most gases used at the TA-55 Plutonium Facility are stored outside the building and the gas is plumbed into the glovebox from outside the building (TWCP-4164). Occasionally, a lecture bottle may have been used for a process inside the building, but these bottles were kept outside of the glovebox with the gas plumbed into the glovebox. Consequently, compressed gas cylinders or containers are not expected to be in any of the TRU wastes generated by TA-55 operations.

Spray cans, especially WD-40, were in common use in TA-55 gloveboxes until May 1992 (TWCP-4166). These were routinely discarded as metal debris waste. From 1988 until May 1992, the protocol was to vent or puncture the spray cans inside the glovebox; venting was indicated by inserting a metal wire into the valve. After May 1992, spray cans were no longer used in gloveboxes.

For items of pyrochemical salt waste, the procedures of oxygen sparging and/or carbonate oxidation have been used since May 1987 to ensure that pyrophorics were oxidized. In addition, screening tests on similar pyrochemical salts and residues (which contain higher amounts of plutonium) at the Rocky Flats Environmental Technology Site (TWCP-2501) have shown (1) no autoignition, (2) no spontaneous combustion, (3) and no sparking. Experimental results on the reactivity of LANL DOR salt with water and the reactivity in air of heated calcium metal nodules from DOR salts indicate the absence of "dangerous when wet materials" and pyrophoricity in these salts (TWCP-3730, TWCP-3731, TWCP-3732).

Verification that individual waste drums do not contain compressed gases, free liquids, or sealed containers greater than 4 L in volume is obtained from radiography of each waste containers and visual examination of selected containers during TWCP characterization activities. Any free liquids are remediated, and any sealed containers greater than 4 L in volume, or unpunctured or unvented gas containers, are removed; or else the waste container is tagged as non-compliant by filing a Prohibited Waste Report in accordance with *Nonconformance Reporting and Tracking* (TWCP-QP-1.1-007). For administrative controls on the prohibition of pyrophorics, see Sections 5.0 and 6.0.

8.0 VERIFICATION THAT THERE ARE NO POLYCHLORINATED BIPHENYLS (PCBs) IN THE WASTE STREAM

No PCBs were introduced into the pyrochemical processes, based on documentation in TA-55 procedures reviewed during the AK investigation and summarized in the process inputs listed in Table 1, Table 3, and Attachment 4. Oils used in the reviewed processes include vacuum pump oils, and cutting fluids used for cooling purposes; none of these oils are known to contain PCBs. Any organic compounds present in the process materials would be destroyed or vaporized by the high temperatures of the pyrochemical processes

that dominate pyrochemical processing. All transformers known to contain PCBs have been tracked from the time of startup of TA-55 in 1978. Whenever any transformer oil is drained, it is handled by a subcontractor who is wholly responsible for its disposal (TWCP-AK-2.1-005,R.2, Section 8.0). This oil does not enter the LANL disposal operations.

9.0 CITED PROCEDURES AND REQUIREMENTS DOCUMENTS

- 40 CFR Part 261, Subpart C—Characteristics of hazardous waste, Sections 261.21 (*Characteristic of ignitability*), 261.22 (*Characteristic of corrosivity*), 261.23 (*Characteristic of reactivity*), and 261.24 (*Toxicity characteristic*)
- 40 CFR Part 261, Subpart D—Lists of hazardous waste, Sections 261.31 *(Hazardous wastes from non-specific sources),* 261.32 *(Hazardous wastes from specific sources),* and 261.33 *(Discarded commercial chemical products, off-specification species, container residues, and spill residues thereof)*
- 49 CFR Subpart C—Segregation and separation chart of hazardous materials. Section 177.848, *Segregation of hazardous materials*
- *Acceptable Knowledge Documentation* (TWCP-QP-1.1-021,R.5)
- *Nonconformance Reporting and Tracking* (TWCP-QP-1.1-007)
- *Records Management* (TWCP-QP-1.1-004)
- *Reconciliation of Visual Examination and Radiography Information* (TWCP-QP-1.1-028)
- *Waste Acceptance Criteria for the Waste Isolation Pilot Plant* (DOE/WIPP-069)
- *Waste Analysis at Facilities that Generate, Treat, Store and Dispose of Hazardous Waste* (EPA/OSWER 9938.4-03)
- Waste Analysis Plan (Attachment B) to the *Hazardous Waste Facility Permit Issued to the Waste Isolation Pilot Plant* (EPA No. NM4890139088)
- *Waste Characterization Data Reconciliation with Acceptable Knowledge* (TWCP-DTP-1.2-064)

ACCEPTABLE KNOWLEDGE ROADMAP

P/S codes: CRD, ER, MO, MP, OR, Neptunium, PK, PTP, RA, SCB, SD, SS, and SSMD.

Copies of these documents are in the TWCP RMDC Center. Refer to *Records Management* (TWCP-QP-1.1-004) for information on obtaining copies.

TWCP Record No.	Information Category Code*	Information	Source	Summary	Limitations
TWCP-352	B	Description of plutonium recovery processes	*Wastes from Plutonium Conversion and Scrap Recovery Operations,* LA-11069-MS, March 1988.	Document describes the Pu residues and the various treatment approaches used in recovering plutonium from scrap	Document does not give information about RCRA constituents introduced or present in the processes
TWCP-614	D	All TA-55 waste is Defense related.	Memo from Doug Sankey.	All TA-55 waste is Defense related.	Budget information may not be acceptable.
TWCP-697	C	Waste management requirements to meet WIPP WAC requirements were formalized in 1984.	*Los Alamos TRU Waste Certification Plan for Newly Generated TRU Waste,* WCP-HSE7-CPL-01, R.2 (November 1984)	Waste management requirements to meet WIPP WAC requirements. Generator Attachments were used to describe and reference specific generator procedures.	Overview document - Generator Attachments provide more detailed information.
TWCP-698	B	Gives Material Type compositions	NMT Memo, NMT-7 WM/EC-96-032 Benchmark Environmental Corp. Memo, AL-7193 BEC	Gives Material Type compositions	Does not give information on how material may fractionate in TA-55 waste processes.
TWCP-700	C	*Attachment 3 to the Los Alamos TRU Waste Certification Plan for Newly Generated TRU Waste,* R05	*NMT-7 Attachment, January 1995,* TRUWM-TA55-CPA-03,R00	Documents how controls to meet WIPP WAC were implemented and how independent verification was accomplished.	Information is not extremely detailed.
TWCP-701	C	*TA-55 Generator Attachment* to the *TRU Waste Certification Plan for Newly Generated TRU Waste*	*TA-55 Attachment, 1987,* TRU-MST12-CPA-03,R00	Documents how controls to meet WIPP WAC were implemented and how independent verification was accomplished.	Information is not extremely detailed.

* Information Category Codes: A = forms intended for use in waste certification, B = data from controlled databases and published documents, C = unpublished data, and D = interviews, memos, and letters

TWCP Record No.	Information Category Code*	Information	Source	Summary	Limitations
TWCP-816	D	Jim Foxx Interview on Number of Layers of Packaging	C.L. Foxx, Los Alamos National Laboratory	Waste was co-mingled with room trash, and was initially boxed as low-level waste. Subsequently, some of these waste boxes were returned for disposal in drums as TRU waste when on-site radioassay results showed them exceeding the low-level discard limits.	None
TWCP-882 (UCNI)	D	Secondary Radionuclides and Toxic Metals in TA-55 TRU Waste	Memo from Jim Foxx	Lists additional radionuclides and metals potentially in waste, subdivided by process status code. Covers time period from 1978 to present.	Best information available, but it is based on worker recollection because other records are not available.
TWCP-886	C	Color Flow Diagram of Pu-processes at TA-55.	Diagram from Jim Foxx	Indicates that process inputs are thermally treated and that heavy metals from process inputs end up in the nitric acid evaporator bottoms.	Does not indicate solvent input to processes.
TWCP-887	D	Co-mingling of Defense and Non-Defense TRU Waste	Memo from Jim Foxx	Wastes generated from defense and non-defense activities were not segregated at TA-55 through 1997	None
TWCP-1258	B	"Waste Determination Report for Waste Stream TA-55-43, Lot No.1"	LANL internal report	Table B-1 lists the decomposition and vaporization temperatures of Hg, Se, and As and their oxides and chlorides.	None
TWCP-2498	C	Procedure for Salt Distillation in Room 429, PF-4	TA-55 Document, 103-MPP-R02	Contains materials used in the process	No RCRA analyses documents
TWCP-2501	B	"Backlog Waste Reassessment Baseline Book, Waste Form 34"	Rocky Flats Environmental Technology Site Report 1995	Page WF34-10 contains results of tests for corrosivity	Tests were conducted on residues rather than on waste.

* Information Category Codes: A = forms intended for use in waste certification, B = data from controlled databases and published documents, C = unpublished data, and D = interviews, memos, and letters

TWCP Record No.	Information Category Code*	Information	Source	Summary	Limitations
TWCP-2502	D	"Acceptable Knowledge Personnel Interview Form" for Waste Stream TA-55-39 (pyrochemical salts) and P/S codes MP, OR, SS, PX, PY, ER and RM	Jim Foxx, NMT-7	Answers to miscellaneous questions on pyrochemical processes.	Not a good overview
TWCP-2505 (UCNI)	C	Procedure for Plutonium Electrorefining (P/S code SS)	TA-55 Document, 432-MPP-R08	Contains materials used in the process	No RCRA analyses documents
TWCP-2506 (UCNI)	C	Procedure for Fused Salt Extraction of Americium and Plutonium Metal (P/S code SS)	TA-55 Document, 440-MPP-R08	Contains materials used in the process	No RCRA analyses documents
TWCP-2507 (UCNI)	C	Procedure for Direct Oxide Reduction (P/S code OR)	TA-55 Document, 426-MPP-R05	Contains materials used in the process	No RCRA analyses documents
TWCP-2513	A	Example of Generator Reports for Drum 54856	TA-55 Records Management Center	Example of generator records including WPRF #07045 and WODF form showing the waste generator certification statement.	Older forms are often hard to read
TWCP-2539 (UCNI)	C	Preparation of Pu Metal by the Fluoride Reduction Process	TA-55 Document, 487-REC-R01	Contains materials used in the process	No RCRA analyses documents
TWCP-2540 (UCNI)	A	Answers to questions about pyrochemical processes	Jim Foxx, NMT-7-WM/EC-99-118	Also contains old records of analysis of DOR salts	None
TWCP-2541 (UCNI)	C	Procedure for Pyroredox Processing of Spent Electrorefining Anodes (P/S code RA)	TA-55 Document, 460-MPP-R00	Contains materials used in the process	No RCRA analyses documents
TWCP-3542 (UCNI) (PYRO-1)	C	Procedure for Metal Breaking Press (P/S code SS)	TA-55 Document, 408-MPP-R05	Contains materials used in the process	No RCRA analyses documents
TWCP-3542 (UCNI) (PYRO-2)	C	Procedure for Electrorefining Plutonium Metal - CRAC Cell (P/S code SS)	TA-55 Document, 410-MPP-R03	Contains materials used in the process	No RCRA analyses documents

* Information Category Codes: A = forms intended for use in waste certification, B = data from controlled databases and published documents, C = unpublished data, and D = interviews, memos, and letters

TWCP Record No.	Information Category Code*	Information	Source	Summary	Limitations
TWCP-3542 (UCNI) (PYRO-3)	C	Procedure for Electrorefining of Plutonium Metal, Nominal Four Kg Scale (P/S code SS)	TA-55 Document, 430-MPP-R02	Contains materials used in the process	No RCRA analyses documents
TWCP-3542 (UCNI) (PYRO-4)	C	Procedure for Chloride Melt Preparation for Electrorefining and Fused Salt Extraction (P/S code SS)	TA-55 Document, 431-MPP-R05	Contains materials used in the process	No RCRA analyses documents
TWCP-3542 (UCNI) (PYRO-6)	C	Procedure for Reverse Cell Electrorefining (P/S code SS)	TA-55 Document, 435-MPP-R02	Contains materials used in the process	No RCRA analyses documents
TWCP-3542 (UCNI) (PYRO-7)	C	Procedure for In-Situ Chlorination of Plutonium Metal (P/S code SS)	TA-55 Document, 437-MPP-R02	Contains materials used in the process	No RCRA analyses documents
TWCP-3542 (UCNI) (PYRO-8)	C	Procedure for Coalescence of Plutonium Metal (P/S code SS)	TA-55 Document, 445-MPP-R06.1	Contains materials used in the process	No RCRA analyses documents
TWCP-3542 (UCNI) (PYRO-9)	C	Procedure for Salt Stripping of Electrorefining Salts (P/S code SS)	TA-55 Document, 450-MPP-R04	Contains materials used in the process	No RCRA analyses documents
TWCP-3542 (UCNI) (PYRO-10)	C	Procedure for Salt Stripping of Electrorefining Salts Using Oxygen/Argon Sparging (P/S code SS)	TA-55 Document, 453-MPP-R07	Contains materials used in the process	No RCRA analyses documents
TWCP-3542 (UCNI) (PYRO-11)	C	Procedure for Actinide Metal and Alloy Oxidation (P/S code MO)	TA-55 Document, 497-MPP-R04	Contains materials used in the process	No RCRA analyses documents
TWCP-3542 (UCNI) (PYRO-12)	C	Procedure for Pickling of Plutonium Metal and Pyrochemical Process Equipment (P/S code PK)	TA-55 Document, 405-MPP-R03	Contains materials used in the process	No RCRA analyses documents
TWCP-3542 (UCNI) (PYRO-13)	C	Procedure for Chlorination of Plutonium Compounds (P/S code PTP)	TA-55 Document, 407-MPP-R04	Contains materials used in the process	No RCRA analyses documents

* Information Category Codes: A = forms intended for use in waste certification, B = data from controlled databases and published documents, C = unpublished data, and D = interviews, memos, and letters

TWCP Record No.	Information Category Code*	Information	Source	Summary	Limitations
TWCP-3542 (UCNI) (PYRO-14)	C	Procedure for Reduction of PuO2 to Metal, 700g Scale (P/S code OR)	TA-55 Document, 420-MPP-R05	Contains materials used in the process	No RCRA analyses documents
TWCP-3542 (UCNI) (PYRO-15)	C	See Special Processing reference SP-29 in TWCP-3543	TA-55 Document, 434-MPP-R01	Contains materials used in the process	No RCRA analyses documents
TWCP-3542 (UCNI) (PYRO-16)	C	Procedure for Semi-continuous DOR with Salt Regeneration (P/S code OR)	TA-55 Document, 426-MPP-R05	Contains materials used in the process	No RCRA analyses documents
TWCP-3542 (UCNI) (PYRO-17)	C	Procedure for Electrorefining of Pu Metal, Nominal 6 kg Scale (P/S code SS)	TA-55 Document, 432-MPP-07	Contains materials used in the process	No RCRA analyses documents
TWCP-3542 (UCNI) (PYRO-18)	D	Acceptable Knowledge Interview Form for Pyrochemical Processing	Jim McNeese, NMT-2	SME review of Pyrochemical Processing AK Report	Generally good comments, but SME couldn't always recall specific information about an aspect of a process.
TWCP-3542 (UCNI) (PYRO-19)	D	Acceptable Knowledge Interview Form for Pyrochemical Processing	Jim Foxx, NMT-7	SME review of Pyrochemical Processing AK Report	None
TWCP-3542 (UCNI) (PYRO-21)	D	Acceptable Knowledge Interview Form for Pyrochemical Processing	Sammi Owens, NMT-2	Answers to questions about P/S code Neptunium	Classified nature of information places limitations on information
TWCP-3542 (UCNI) (PYRO-22)	D	Acceptable Knowledge Interview Form for Pyrochemical Processing	Peter Lopez, NMT-5 Walt Griego, NMT-2	Answers to questions about P/S code SSMD	Project occurred long enough in the past that SMEs had difficulty recalling details.
TWCP-3542 (UCNI) (PYRO-23)	C	Procedure for Salt Distillation (P/S code SD)	TA-55 Document, 102-MPP-R01	Contains materials used in the process	No RCRA analyses documents

* Information Category Codes: A = forms intended for use in waste certification, B = data from controlled databases and published documents, C = unpublished data, and D = interviews, memos, and letters

TWCP Record No.	Information Category Code*	Information	Source	Summary	Limitations
TWCP-3542 (UCNI) (PYRO-24)	D	Acceptable Knowledge Interview Form for Pyrochemical Processing	Mike West, NMT-2 Greg Bird, NMT-2	Answers to questions regarding P/S codes SBB and SCB. No RCRA-listed metals used in processes, Freon may have been used to clean parts.	SMEs couldn't recall some specific information.
TWCP-3542 (UCNI) (PYRO-25)	C	Procedure for Fused Salt Extraction of Americium from Plutonium Metal	TA-55 Document 440-MPP-R00 – R08	Contains materials used in the process	No RCRA analyses documents
TWCP-3542 (UCNI) (PYRO-27)	D	Acceptable Knowledge Interview Form for Pyrochemical Processing	Jim Foxx, NMT-7	Answers to questions regarding usage timeframe for vanadium pentoxide	Answers to specific questions or topics
TWCP-3542 (UCNI) (PYRO-28)	C	Acceptable Knowledge Interview Form for Pyrochemical Processing	Jim Foxx, NMT-7 9/23/99	Answers to questions regarding processes done in Special Processing and Pyrochemical Processes	Answers to specific questions
TWCP-3730 (UCNI)	B	Pyrophoricity characterization	Characterization of Direct Oxide Salts (LA-CP-95-0098)	Hydrogen generation and pyrophoricity of DOR salts. Also gives reference for MSE, ER, and Cr-containing salts.	None
TWCP-3731	D	Sodium pyrophoricity in pyrochemical salts	Memo (MST-12-ARO-88-052)	Treatment of sodium in salts is effective	Sodium only
TWCP-3732	C	Experimental data on calcium pyrophoricity in salts	Memo (MST-12-ARO-88-077)	Treatment of calcium in salts is effective	Calcium only
TWCP-3943	D	Procedure for Waste Management at TA-55	TA-55 Document, 406-GEN-R00	Contains information on waste management procedures in 1978	None, but doesn't address today's waste management concerns
TWCP-4162	D	Answers to questions about P/S codes PB, PuBe, CC, MB, MS, FF, BF, and other issues	Interview with Jim Foxx, 10/12/00	Answers to questions on use of asbestos at TA-55, non-defense activities, and specific P/S codes in chloride operations.	None

* Information Category Codes: A = forms intended for use in waste certification, B = data from controlled databases and published documents, C = unpublished data, and D = interviews, memos, and letters

TWCP Record No.	Information Category Code*	Information	Source	Summary	Limitations
TWCP-4164	D	Answers to questions about various P/S codes	Interview with Jim Foxx, 10/16/00	Answers to questions on use of silver, disposal of ash and resins, and use of gases.	None
TWCP-4166	D	Answers to questions about P/S codes DO, EV, HP, CF, OR, RM, PY	Interview with Jim Foxx, 10/17/00	Answers to questions on use of chromium and silver, RCRA metals in cement, asbestos in furnaces and gloves, and disposal of spray cans used in gloveboxes.	None
TWCP-4167	D	Answers to questions about segregation of non-defense wastes; leachability of silver from ash	Interview with Jim Foxx, 10/18/00	Segregation of non-defense wastes began on 27 August 1998; analytical data show that silver in ash is below limits of regulatory concern	None
TWCP-4720	B	Describes the procedure to be taken at TA-55 in the event of a misfire or unconsumed explosives (from the Impact Test Facility 40-mm gun, P/S codes ITF and ITF4) to ensure that explosives do not enter the waste stream	40-mm Powder Breech Project Waste Management Plan, Rev. 2 (issued March 27, 2000)	Procedure to be taken at TA-55 in the event of a misfire or unconsumed explosives (from the Impact Test Facility 40-mm gun) to ensure that explosives do not enter the waste stream	Does not appear to be a controlled document. Without revision history, cannot tell when this document was first issued, and how the potential for unconsumed explosives was addressed when the Impact Test Facility (ITF) began in 1996
TWCP-5164	D	Sources of Cs-137 and Pa-231 in TA-55 TRU waste	Interview with Jim Foxx (TA-55 SME) on April 2, 2001	Plutonium operations never handled Cs-137 or Pa-231 in any of the Pu processing areas at TA-55. However, Cs-137 is expected to be present in the wastes because it is a fission product of several Pu isotopes. Pa-231 is expected to be present (as a function of the age of the waste) because it is a decay chain daughter of Pu-239 and U-235.	None

* Information Category Codes: A = forms intended for use in waste certification, B = data from controlled databases and published documents, C = unpublished data, and D = interviews, memos, and letters

TWCP Record No.	Information Category Code*	Information	Source	Summary	Limitations
TWCP-5165	D	Sources of Cs-137, Pa-231, and Cm-244 in TA-55 TRU waste	Interview with Jim Foxx (TA-55 SME) on April 11, 2001	Dominant source of Cs-137 expected to be due to residual contamination from original separation of Pu from production fuel. Cm-244 introduced in P/S code DOP starting in 1988, but could also show up after that date in IS, WE, CA and CF.	None
TWCP-5372	D	Applicability of P120 to waste generated by P/S codes SD and SS	Interview with Jim Foxx (TA-55 SME) on May 7, 2001	Vanadium pentoxide was used between February 1998 and June 1998. SME information indicates that waste from this work would have been packaged into containers that were closed by the end of December 1998.	None
TWCP-AK-2.1-002,R.2	A	*Process Acceptable Knowledge Report for Chloride Operations at TA-55*	Generators interview and TWCP AK references	Detailed information on each P/S code for chloride operations at TA-55	None
TWCP-AK-2.1-003,R.2	A	*Process Acceptable Knowledge Report for Metal Operations at TA-55*	Generators interview and TWCP AK references	Detailed information on each P/S code for metal operations at TA-55	None
TWCP-AK-2.1-004,R.2	A	*Process Acceptable Knowledge Report for Miscellaneous Operations at TA-55*	Generators interview and TWCP AK references	Detailed information on each P/S code for miscellaneous operations at TA-55	None
TWCP-AK-2.1-005,R.2	A	*Process Acceptable Knowledge Report for Nitrate Operations at TA-55*	Generators interview and TWCP AK references	Detailed information on each P/S code for nitrate operations at TA-55	None
TWCP-AK-2.1-007,R.2	A	*Process Acceptable Knowledge Report for Special Processing Operations at TA-55*	Generators interview and TWCP AK references	Detailed information on each P/S code for special processing operations at TA-55	None

* Information Category Codes: A = forms intended for use in waste certification, B = data from controlled databases and published documents, C = unpublished data, and D = interviews, memos, and letters

TWCP Record No.	Information Category Code*	Information	Source	Summary	Limitations
TWCP-PLAN-0.2.7-001,R.5	C	*Los Alamos National Laboratory Transuranic Waste Characterization AK Information Summary*	LANL TA-55 waste management database, LANL TA-54 TRU waste management database, and TWCP AK reference base on generator's original data	Detailed information on each waste drum and waste stream	None

* Information Category Codes: A = forms intended for use in waste certification, B = data from controlled databases and published documents, C = unpublished data, and D = interviews, memos, and letters

MAP OF LANL

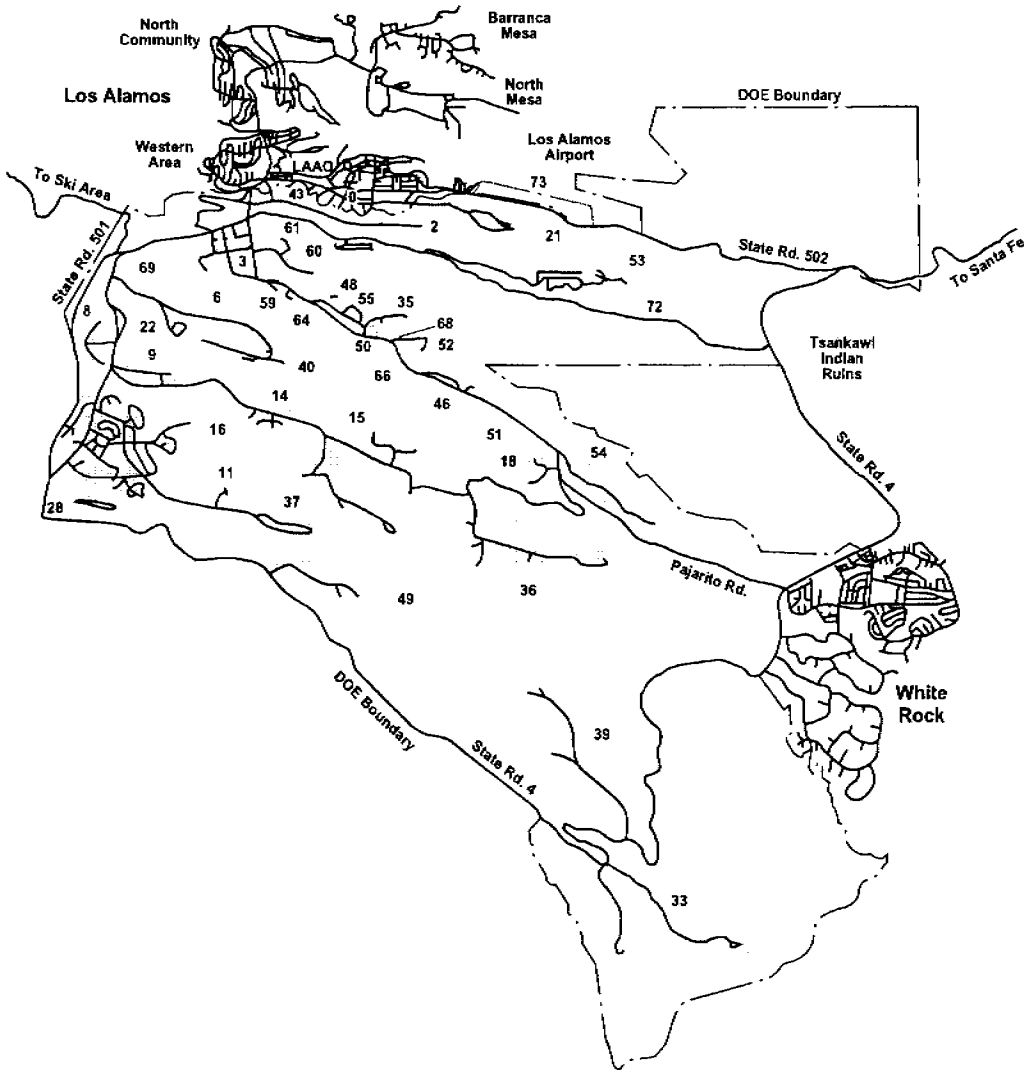

Technical Area Locations

TA-0	Unassigned Land Reserve
TA-2	Omega Site
TA-3	South Mesa Site
TA-5	Beta Site
TA-6	Two Mile Mesa Site
TA-8	Anchor Site West
TA-9	Anchor Site East
TA-11	K-Site
TA-14	Q-Site
TA-15	R-Site
TA-16	S-Site
TA-18	Pajarito Laboratory
TA-21	DP-Site
TA-22	TD-Site
TA-28	Magazine Area A
TA-33	HP-Site
TA-35	Ten Site
TA-36	Kappa Site
TA-37	Magazine Area C
TA-39	Ancho Canyon Site
TA-40	DF-Site
TA-41	W-Site
TA-43	Health Research Lab & DOE Headquarters
TA-46	WA-Site
TA-48	Radiochemistry Site
TA-49	Frijoles Mesa Site
TA-50	Waste Management Site
TA-51	Radiation Exposure Facility
TA-52	Reactor Development Site
TA-53	Meson Physics Facility
TA-54	Waste Disposal Site
TA-55	Plutonium Facility Site
TA-57	Fenton Hill Site
TA-58	Two Mile North Site
TA-59	OH-Site

MAP OF TA-55

Note: The Plutonium Facility, Building PF-4, is labeled PF- 4 on this map.

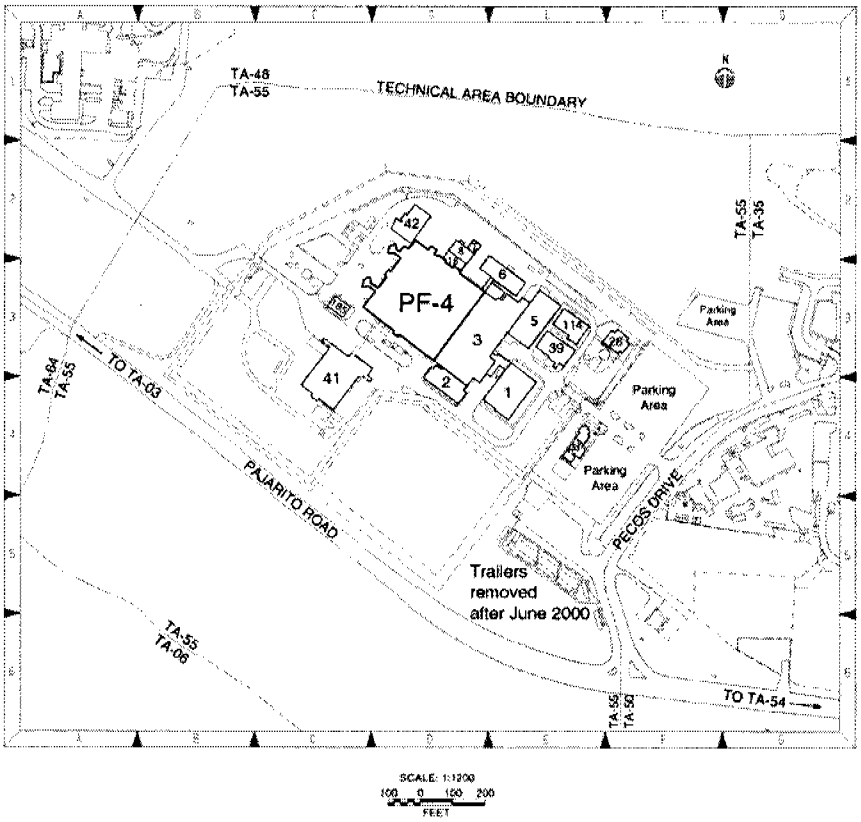

TIMELINE FOR PYROCHEMICAL PROCESSES

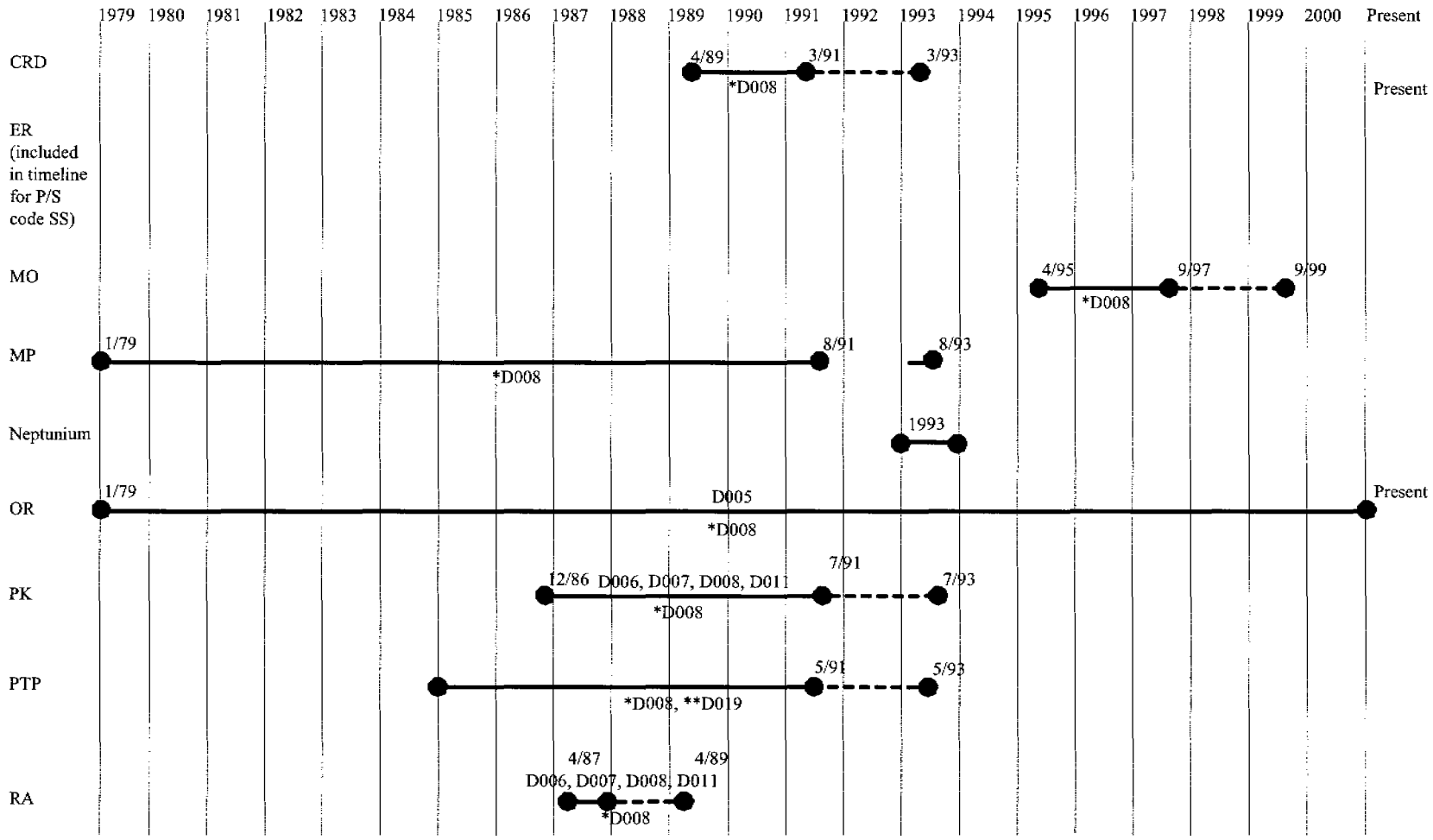

TIMELINE FOR PYROCHEMICAL PROCESSES (continued)

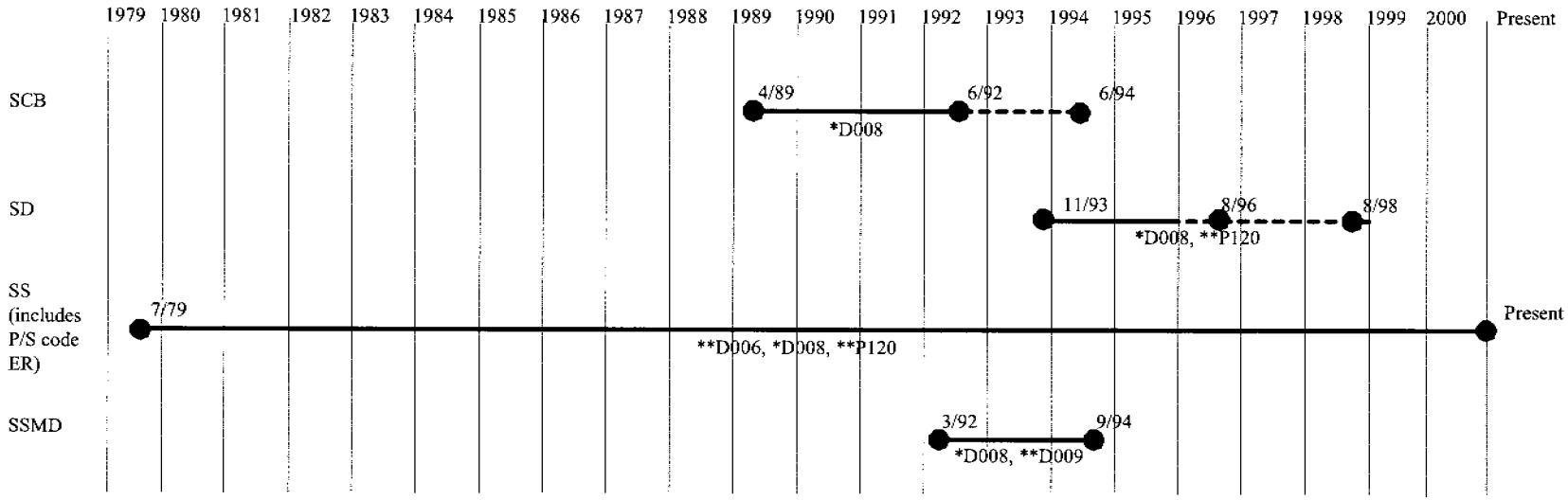

* D008 applies to leaded gloves which where discarded in a separate waste stream after 1992, still under the originating P/S code; also, D008 applies to crucibles and salts discarded under P/S codes ER and/or SS from 1987 to 1989

** Notes on time-dependence of RCRA codes. Prior to 1987, leaded gloves were not segregated from combustible debris. Between 1987 and May 1992, they were segregated and discarded in the metal debris waste stream. Since May 1992, they have been routinely segregated and assigned to a leaded-glove waste stream, still under the originating P/S code (TWCP-4166).

P120 = applies to waste generated under P/S code SD from 2/98 - 3/98 and under P/S code SS from 5/27/98 - 6/10/98
D006 = applies to crucibles and salts discarded under P/S codes ER and/or SS from 1987 to 1989
D009 = applies to waste discarded under P/S code SSMD from 06/94–08/94
D019 = applies to waste discarded under P/S code PTP from 01/87–06/89

TIMELINE EXPLANATION

The P/S code is established either in the P/S diagrams and/or in the procedures designating the start and end dates.

Extrapolate out two (2) years beyond the last revision date for the procedure to next possible review date.

PROCESS INPUTS AND OUTPUTS

P/S Code	P/S Title	Process Inputs		Process Outputs		EPA Codes[2]	References[3]
		Feed Stream(s)	Chemicals/Reagents	Product	Waste Stream[1]		
CRD	Chlorination/reduction RD&D	plutonium metal (varying purity)	Calcium metal, chlorine gas	Pu to vault; salt and crucibles to vault if >DL.	Salt and crucibles to discard if <DL Rags, tools, labware, gloves to discard	*D008	TWCP-3542 (PYRO-18)
ER (currently included in P/S code SS)	Electrorefining	Impure Pu metal from P/S code OR	Magnesium chloride, cadmium metal, bismuth metal, lead metal, gallium metal	Pu metal (high purity); anode heels sent to vault or to P/S code RA; molten salts sent to vault or to P/S code CXL (1984-86) or to carbonate oxidation/distillation	Magnesia crucibles, metal cathodes (usually tungsten)	D006 D008 *D008, P120	
MO	Metal Oxidation, Room 429	plutonium scrap and crucibles from P/S code SS	No chemicals used.	Pu oxide to vault. Crucible >DL to vault	Crucibles <DL to discard. Labware, gloves, rags to discard	*D008	TWCP-3542 (PYRO-11)
MP	Metal Preparation	Pu oxide (varying purity, generally high), from vault or from P/S codes RB or RBJ	Calcium metal, iodine, hydrogen fluoride gas, magnesium oxide	Pu metal to vault or to P/S codes CA or SS. Slag and crucibles to P/S codes ED or SC if > DL. MgO sand reused if possible.	Labware, tools, rags, gloves to discard. Slag (calcium fluoride and calcium iodide), magnesium oxide sand, and crucible pieces sent to P/S codes ED or SC if < DL, to be leached and discarded	*D008	TWCP-352, TWCP-2502, TWCP-2506, TWCP-2539

P/S Code	P/S Title	Process Inputs		Process Outputs		EPA Codes[2]	References[3]
		Feed Stream(s)	Chemicals/Reagents	Product	Waste Stream[1]		
Neptunium	Neptunium	Neptunium residues from vault; no RCRA-regulated constituents or characteristics	Chemicals used not described, but no RCRA-regulated constituents or characteristics were used.	Classified	Waste description is classified, but does not contain any RCRA-regulated constituents or characteristics		TWCP-3542 (PYRO-21)
OR	Direct Oxide Reduction	plutonium oxide (varying purity)	Calcium metal, oxygen gas, chlorine gas	Pu metal to P/S CA or SS depending on purity. Salts and crucibles >DL to vault or P/S code SS or CXL. Chlorine off-gas sent through scrubber, and caustic solution to P/S code CXL if > DL	Salts and crucibles <DL sent to chloride operations and discarded under P/S code CXL or DO after 1988 (or under OR before 1988); caustic solution < DL sent to RLWTF	D005, *D008	TWCP-1258, TWCP-2502, TWCP-2507; TWCP-3542 (PYRO-14, PYRO-15, PYRO-16, PYRO-18, PYRO-19)
PK	Pickling and Nitrate Holding	Hardware, metal, anode chips.	Hydrochloric acid, nitric acid	Pu metal to originating P/S. HCl leach solution to P/S CX or CXL, nitric acid leach solution to P/S LR.	Hardware to discard	D006 D007 D008 *D008 D011	TWCP-3542 (PYRO-12)
PTP	Plutonium Trichloride Preparation	Plutonium dioxide	Chlorine gas, hydrogen chlorine gas, carbon tetrachloride, phosgene gas, calcium metal, aluminum metal, calcium chloride, sodium chloride, potassium chloride, sodium hydroxide, potassium hydroxide, hydrochloric acid, nitric acid	Pu metal to P/S code SS, CA, or vault. HCl leach solution to P/S CX, nitric acid leach solution to P/S LR.	Salt, crucibles < DL to discard. Tools, labware, rags, gloves to discard	*D008 D019	TWCP-3542 (PYRO-13)

P/S Code	P/S Title	Process Inputs		Process Outputs		EPA Codes[2]	References[3]
		Feed Stream(s)	Chemicals/Reagents	Product	Waste Stream[1]		
RA	Recovery of Anode	Anode heels from vault	Calcium metal, zinc chloride, potassium chloride	Pu metal to vault or to P/S code ER, zinc metal (containing any RCRA heavy metals) to vault or further treated	Salt Labware, gloves, rags to discard	D006 D007 D008 *D008 D011	TWCP-2541
SCB	Chlorination Ca/Al Scrubbing RD&D	Pu samples from P/S codes OR or SS	Calcium metal, aluminum metal, calcium chloride, sodium chloride, potassium chloride, chlorine gas	Pu to Vault. Salt, crucibles > DL to vault.	Salt, crucibles < DL to discard Tools labware, rags, gloves to discard	*D008	TWCP-3542 (PYRO-25)
SD	Salt Distillation	Salts from various P/S codes	Vanadium pentoxide, molybdenum oxide	Calcium chloride salts to P/S CXL or vault. Sodium and potassium chloride salts to vault or distillation. Pu residue to vault	Distilled salts to discard Crucible pieces to discard	*D008 P120	TWCP-2498, TWCP-3542 (PYRO-23, PYRO-24)
SS	Salt Stripping	Pu oxide or metal from the vault or from P/S codes DO, CA, MA (Pu turnings)	Calcium metal, calcium chloride, sodium chloride, potassium chloride, chlorine gas, vanadium pentoxide, oxygen gas, molybdenum oxide, magnesium chloride, lithium chloride	Pu metal (high purity) to P/S CA. Impure metal pieces to P/S MO. Salt and crucibles to P/S codes CXL or WM. Labware, tools to aqueous recovery or vault if >DL.	Labware, tools, magnesium oxide crucible to discard if <DL	D006 D008 *D008 P120	TWCP-352, TWCP-2498, TWCP-2505, TWCP-2506; TWCP-3542 (PYRO-1 through -4, and -6 through -10, PYRO-17, PYRO-18, PYRO-28)

P/S Code	P/S Title	Process Inputs		Process Outputs		EPA Codes[2]	References[3]
		Feed Stream(s)	Chemicals/Reagents	Product	Waste Stream[1]		
SSMD	SS Material Development	Samples of Pu from P/S codes CA and SS.	Calcium chloride, sodium chloride, potassium chloride, mercury metal,	Pu metal returned to P/S codes CA and SS.	Salt residue to P/S code SS and vault. Crucible residue to vault or discard.	*D008 D009	TWCP-3542 (PYRO-22)

[1] All P/S codes generate routine laboratory debris waste which typically consists of glassware, plastics, ceramic materials, paper, rags, high-efficiency particulate air filters, metal containers, brushes, and small tools. Leaded gloves may also be generated and are segregated from other metal debris.

[2] See discussion in Section 4.0 for details on the applicability of the EPA HWNs listed in this column. The EPA HWNs listed apply to the solid TRU waste only and not to any other waste forms that may undergo further treatment or processing (e.g., evaporation or cement fixation). The resulting treated waste stream is evaluated for hazardous waste constituents and assigned the applicable EPA HWNs. All P/S codes have the potential to generate leaded gloves. The gloves are segregated from other metal debris waste and are assigned EPA HWN D008 under the originating P/S code.

[3] Refer to the Acceptable Knowledge Roadmap in Attachment 1.

* D008 due to leaded gloves

SIMPLIFIED PROCESS STATUS DIAGRAM

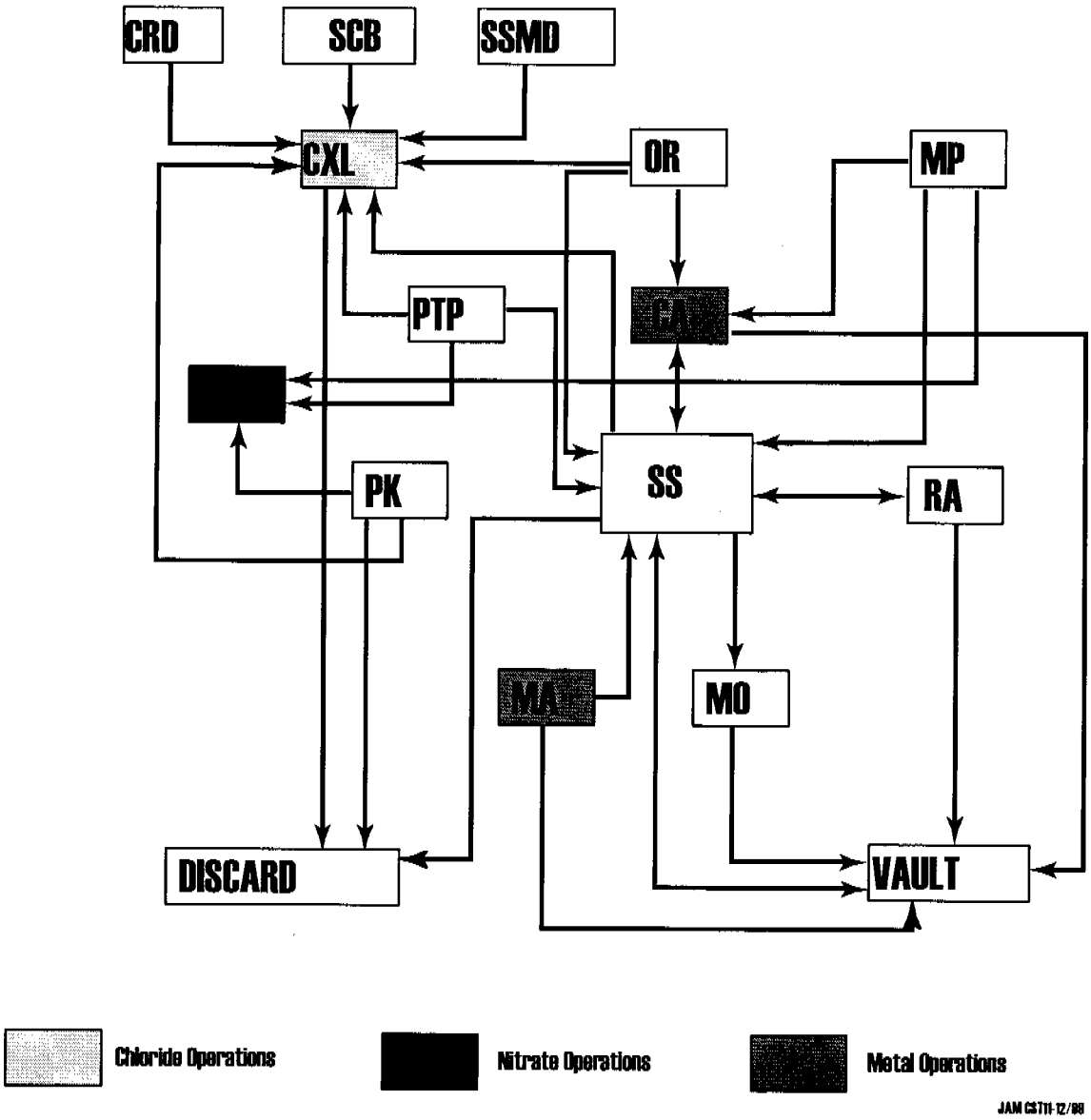

Decision/Discrepancy Resolution Documentation
TA-55 Pyrochemical Processes

Item Identification*	AK No. 1	Source No. 1	AK No. 2	Source No. 2	Decision/Discrepancy	Rationale**
SBB and SCB, and General	Procedure review form indicates possible use of Freon TF for R01-R04	TWCP-3542/Pyro-8	Interview with Jim Foxx, doesn't recall use of Freon, said it could have been used to clean tantalum or tungsten parts. Then not TRU	TWCP-3542/Pyro-18	Freon not listed in report	C—SME indicated Freon could have been used but the cleaning takes place outside the glovebox before the TRU process took place. TRU waste would have no Freon TF. See attached meeting notes.
			Interview with Mike West and Greg Bird-SBB an SCB- no RCRA metals, but Freon may have been used.	TWCP-3542/Pyro-24		
OR and SCB	Per Jim Foxx, Ba (D005) possible in some batches of waste stream	TWCP-2540	Report assigns D005 to P/S code RA only	Process Report		C—SME said D005(AR grade used) would stay in salt Need to remove D005 from the RA. See attached meeting notes.

Sandy Wander — Evaluator (Print Name)
Alt Investigator — Title
Sandy Wander — Signature
2/25/02 — Date

P Rogers — SPM Review (Print Name)
Pamela Rogers — Signature
2/26/02 — Date

* Item identification can be PS Code, waste stream, drum ID, item ID, or other identification of items affected.
** Rationale code: [A=Professional Judgment; B=Most Conservative Decision; C=Other (Specify)]

Source: TWCP-07908

TWCP/WRR
Document Modification/Review Cycle

Step 7: Preparation for Document Control

☐ Revision
☒ Interim Change

Document ID: TWCP-AK-2.1-006 New Rev/IC: R.2/IC1

Preparer: Sandy Wander

Document Title:
Process Acceptable Knowledge Report for Pyrochemical Processes at TA-55

Blank entries are Not Applicable items.

- ☒ Procedure number verified
- ☒ Procedure Title verified
- ☒ Procedu
- ☒ Paginati
- ☒ Docume
- ☒ Attachm
- ☐ Hazard
- ☒ Effective/Review Date/LAUR# on cover page
- ☐ Copy of final to Training/Signature Copies

AK- effective date 3/21/02 – posted to web on 3/28/02, delay in posting was due to pending response from CBFO per Jim Bailey.

RMDC
3/28/02

- ☒ Signatures and Dates typed on cover page
- ☒ Revision History table reflect changes and effective date
- ☐ Forms have been marked as SAMPLE, if applicable
- ☐ Forms extracted for Web publishing
- ☒ Electronic files archived
- ☒ Diskette Prepared for Document Control
- ☒ Document Control packet contains signed original, diskette, DRR/Redline, review documentation

Document Tracking Closed ○ Open ◉ Closed Date to DC: 3/27/2002 Signed Initials: JBB

Step 8: Document Control - Tracking and Web Conversion

Date Received: 3/28/02

- ☑ Verify Signatures
- ☑ Verify Effective Date cover/history
- ☑ Verify IC added to document (if applicable)
- ☑ Log into Database/Make Assignment
- ☑ Print Receipts/Cover sheets
- ☑ Copy document: 2
- ☑ Control Stations Updated - Date: 3/28/02
- ☑ Master Index Updated - Date: 3/28/02
- N/A Archive old revision (Record)

- ☑ Capture Document: __ Word ✓ PDF
- ☑ Forms: __ Yes ✓ No
- ☑ Transfer to Web Server
- ☑ Quality check to Original
- ☑ Verify Signatures ✓ Signature Dates ✓
- ☑ Dates: ✓ Cover ✓ Rev. History ✓ Review Date

- ☑ Web Page TOC: ✓ No/Rev ✓ Effective Date ✓ LAUR ✓ Title ✓ Link ✓ Test
- ☑ On-line test: ✓ Open Doc
- ☑ Electronic Notification: ✓ Sent ✓ Printed
- N/A CBFO: __ Electronic Copy __ Printed
- ☑ Change Control Notification ___ Sent ___ Printed ✓ NA

Date Completed: 3/28/02 Signed Initials: [illegible]

TWCP/WRR
Document Modification/Review Cycle

Step 1: Receipt of Document

Status: ○ Open ◉ Closed ☐ Revision ☒ Interim Change

Date Received: 3/21/2002

Current Rev/IC: R.2

Document ID: TWCP-AK-2.1-006

Rev/IC: R.2/IC1

Document Title:
Process Acceptable Knowledge Report for Pyrochemical Processes at TA-55

Preparer: Sandy Wander

Date to DP Team: 3/21/2002

Step 2: Modification Cycle

Technical Reviewer:
(QA and Preparer)

Release for Review:

Comments:
03/27/02: Prepared document for transmittal to Document Control

Step 3: Preliminary Review Cycle

☒ IC - Not Applicable (enter action in comments section)

Reviewer	Name	Sent Out	Returned	Comments

Comments:

TWCP/WRR
Document Modification/Review Cycle

Step 4: Comment Reconciliation Cycle ☒ IC - Not Applicable (enter action in comments section)

Reviewer Comments Incorporated:
Redline/DRR Given to Preparer:
Reconciled Comments Returned:
Modifications Made to Document:
Preparer Review of Modifications:
Signed/Release for Final Signature:

Comments:

Step 5: Final Signature Cycle ☒ IC - Not Applicable (enter action in comments section)

Signature	Position	Sent Out	Returned	Comments

Comments:

Step 6: External Review Cycle

Organization	Contact	Sent Out	Returned	Comments
Change Control	G M Polley	3/21/2002	3/25/2002	NA

Comments

LOS ALAMOS
NATIONAL LABORATORY - TWCP RMDC

Controlled Document Acknowledgment

Failure to return receipt by response date may result in removal from Distribution and/or placement on Supervised Work Activities for reciepients who are overseeing or performing work to this document.

Please Sign, Fold, and Return this Form

To: TWCP RMDC **Mail Stop: M 319** **Please Respond 4/11/2002**

TWCP-AK-2.1-006,R.2/IC1

Effective Date 3-21-2002 **Doc_Source** TWCP **Doc_Status** FINAL **Entry No**

Document Title PROCESS ACCEPTABLE KNOWLEDGE REPORT FOR PYROCHEMICAL PROCESSES AT TA-55 (LA-UR-02-1713)

Document Comments

Work Stations	ID_No	Name	MS	Organization	Copy
☒ RMDC	N/A	?	?	?	
☐ WCRRF					
☐ RAMROD					
☐ RANT					
☐ DECON					
☒ QA					

Action Required:
Please sign receipt and return to **RMDC, M 319**. My Signature on this Form verifies that I have Received this Document.

___ Please remove me from the Controlled Distribution List. Since the contents of this document does not apply to our operation the document is being returned. (Not applicable for Controlled Stations)

To be signed by the Controlled Document Recipient or their designee.

Signature: _____ Date: 3/28/02

To: rubyannf@lanl.gov, mlgarcia@lanl.gov
From: Patricia G Patton <pgp@lanl.gov>
Subject: Procedure Notification
Cc: fabi,bailey, lpc
Bcc:
Attached:

The following are revised AK reports.

Effective Date: 3/21/02

TWCP-AK-2.1-004,R.2/IC1 - Process Acceptable Knowledge Report for Miscellaneous Operations at TA-55 (LA-UR-02-1714)

TWCP-AK-2.1-005,R.2/IC1 - Process Acceptable Knowledge Report for Nitrate Operations at TA-55 (LA-UR-02-1715)

TWCP-AK-2.1-006,R.2/IC1 - Process Acceptable Knowledge Report for Pyrochemical Processes at TA-55 (LA-UR-02-1713)

TWCP-AK-2.1-007,R.2/IC1 - Process Acceptable Knowledge Report for Special Processing at TA-55 (LA-UR-02-1712)

TWCP-AK-2.1-009,R.0/IC1 - Process Acceptable Knowledge Report for Plutonium-238 Operations at TA-55 (LA-UR-02-1709)

~~~~**~~**~~**~~**~~**~~**~~**~~**

Patricia G. Patton
Los Alamos National Laboratory
E-ET / TWCP
Records Management - Document Control
(RMDC)
557 Oppenheimer
TA-00 - bldg 764
MS M319
Phone: (505) 667-2071
Email: pgp@lanl.gov

~~~~**~~**~~**~~**~~**~~**~~**~~**

TWCP/WRR
Document Modification/Review Cycle

Step 7: Preparation for Document Control

☒ Revision
☐ Interim Change

Document ID: TWCP-AK-2.1-006 New Rev/IC: R.2

Preparer: John Musgrave

Document Title:
Process Acceptable Knowledge Summary Report for Pyrochemical Processes at TA-55

Blank entries are Not Applicable items.

- ☒ Procedure number verified
- ☒ Procedure Title verified
- ☒ Procedure Revision/IC verified
- ☒ Pagination verified
- ☒ Document Header verified
- ☒ Attachment Header verified
- ☐ Hazard Summary verified (if applicable)
- ☒ Effective/Review Date/LAUR# on cover page
- ☐ Copy of final to Training/Signature Copies
- ☒ Signatures and Dates typed on cover page
- ☒ Revision History table reflect changes and effective date
- ☐ Forms have been marked as SAMPLE
- ☐ Forms extracted for Web publishing
- ☒ Electronic files archived
- ☒ Diskette Prepared for Document Control
- ☒ Document Control packet contains signed original, diskette, DRR/Redline, review documentation

Document Tracking Closed ○ Open ◉ Closed Date to DC: 5/17/2001 Signed Initials: JSS

Step 8: Document Control - Tracking and Web Conversion

Date Received: 5/18/01

- ☑ Verify Signatures
- ☑ Verify Effective Date cover/history
- NA Verify IC added to document (if applicable)
- ☑ Log into Database/Make Assignment
- ☑ Print Receipts/Cover sheets
- ☑ Copy document: 1
- ☑ Control Stations Updated - Date: 5/18/
- ☑ Master Index Updated - Date: _____
- ☑ Archive old revision (Record)

- ☑ Capture Document: ✓ Word ✓ PDF
- ☑ Forms: __ Yes ✓ No
- ☑ Transfer to Web Server
- ☑ Quality check to Original
- ☑ Verify Signatures ✓ Signature Dates ✓
- ☑ Dates: ✓ Cover ✓ Rev. History ✓ Review Date
- NA Add: Controlled Document Original Signatures on File at the RMDC
- NA Security Set for: ____ Read Only
- ☑ Web Page TOC: ✓ No/Rev ✓ Effective Date NA LAUR ✓ Title ✓ Link ✓ Test
- ☑ On-line test: ✓ Open Doc NA Password
- ☑ Electronic Notification: ✓ Sent __ Printed
- ☑ CAO: ✓ Electronic Copy __ Printed

Date Completed: 5/18/01 Signed Initials: [illegible]

TWCP/WRR
Document Modification/Review Cycle

Step 4: Comment Reconciliation Cycle

☐ IC - Not Applicable (enter action in comments section)

Reviewer Comments Incorporated:

Redline/DRR Given to Preparer:

Reconciled Comments Returned:

Modifications Made to Document:

Preparer Review of Modifications:

Signed/Release for Final Signature:

Comments:

Step 5: Final Signature Cycle

☐ IC - Not Applicable (enter action in comments section)

Signature	Position	Sent Out	Returned	Comments
J. Fabryka-Martin	Technical	5/7/2001	5/7/2001	Independent Technical Reviewer/Editor
M. Lin	SPM	5/10/2001	5/10/2001	Site Project Manager
S. Wander	QA	5/14/2001	5/14/2001	Waste Certification Official
M. Gavett	QA	5/14/2001	5/14/2001	Site Project QA Officer
C. Foxx	Fac Mgr	5/7/2001	5/7/2001	Facility Representative

Comments:

Step 6: External Review Cycle

Organization	Contact	Sent Out	Returned	Comments
Classification			5/16/2001	LA-UR-01-2558

Comments

TWCP/WRR
Document Modification/Review Cycle

Step 1: Receipt of Document

Status: ○ Open ◉ Closed ☒ Revision ☐ Interim Change

Date Received: 4/1/2001

Current Rev/IC: R.1

Document ID: TWCP-AK-2.1-006

Rev/IC: R.2

Document Title:
Process Acceptable Knowledge Summary Report for Pyrochemical Processes at TA-55

Preparer: John Musgrave

Date to DP Team: 4/1/2001

Step 2: Modification Cycle

Technical Reviewer:
(QA and Preparer)

Release for Review:

Comments:
04/01/01 through 05/16/01: Incorporated changes made by author, reviewers, and auditors

Step 3: Preliminary Review Cycle

☐ IC - Not Applicable (enter action in comments section)

Reviewer	Name	Sent Out	Returned	Comments

Comments:

To: rubyannf@lanl.gov, mlgarcia@lanl.gov, prmtz@lanl.gov
From: Louise Garcia <louise@lanl.gov>
Subject: For Training Distribution
Cc: fl@lanl.gov, manmtz@lanl.gov
Bcc:
Attached:

The following are revised AK Reports.

TWCP-AK-2.1-006,R.2 - Process Acceptable Knowledge Summary Report for Pyrochemical Processes at TA-55

TWCP-AK-2.1-007,R.2 - Process Acceptable Knowledge Summary Report for Special Processing at TA-55

To: wipp.notify@wipp.carlsbad.nm.us
From: Louise Garcia <louise@lanl.gov>
Subject: [Procedure]
Cc: Tammy.Bowden@wipp.carlsbad.nm.us
Bcc: fl@lanl.gov
Attached: K:\twcp\RMDC\AK\TWCP-AK-2.1-006\TWCP-AK-2^1-006R2.pdf;
K:\twcp\RMDC\AK\TWCP-AK-2.1-007\TWCP-AK-2^1-007R2.pdf;

The following are revised AK Reports.

TWCP-AK-2.1-006,R.2 - Process Acceptable Knowledge Summary Report for Pyrochemical Processes at TA-55

TWCP-AK-2.1-007,R.2 - Process Acceptable Knowledge Summary Report for Special Processing at TA-55

LOS ALAMOS
NATIONAL LABORATORY - TWCP RMDC

Controlled Document Acknowledgment

Failure to return receipt by response date may result in removal from Distribution and/or placement on Supervised Work Activities for reciepients who are overseeing or performing work to this document.

Please Sign, Fold, and Return this Form

To: **CST-7 RMDC** Mail Stop: **E517** Please Respond By: **6/1/2001**

TWCP-AK-2.1-006,R.2

Effective Date 5-18-2001 **Doc_Source** TWCP **Doc_Status** FINAL **Entry No**

Document Title PROCESS ACCEPTABLE KNOWLEDGE SUMMARY REPORT FOR PYROCHEMICAL PROCESSES AT TA-55

Document Comments

Work Stations	ID_No	Name	MS	Organization	Copy
☒ RMDC	N/A	?	?	?	
☐ WCRRF					
☐ RAMROD					
☐ RANT					
☐ DECON					
☐ QA					

Action Required:

Please sign receipt and return to **RMDC, E517**. My Signature on this Form verifies that I have Received this Document.

___ Please remove me from the Controlled Distribution List. Since the contents of this document does not apply to our operation the document is being returned. (Not applicable for Controlled Stations)

To be signed by the Controlled Document Recipient or their designee.

Signature: _____ Date: 5/15/01

Draft # 1

TA-55 PLUTONIUM FACILITY
ACCEPTABLE KNOWLEDGE REPORT

REPORT TITLE: Process Acceptable Knowledge Summary Report for Pyrochemical Processes at TA-55

REPORT NUMBER: TWCP-AK-2.1-006,R.1 (LA-UR-00-5862)

WASTE GENERATED FROM PROCESS/STATUS CODES: CRD, ER, MO, MP, Neptunium, OR, PK, PTP, RA, SCB, SD, SS, and SSMD

EFFECTIVE DATE: 12/04/00

NEXT REVIEW DATE: 12/04/02

DOCUMENT PREPARER:

John Musgrave	12/04/00
NAME	DATE

APPROVALS:

June Fabryka-Martin	12/04/00
INDEPENDENT TECHNICAL REVIEWER/EDITOR	DATE
Pamela Rogers	12/04/00
SITE PROJECT MANAGER	DATE
Matt J. Riggs	12/04/00
WASTE CERTIFICATION OFFICIAL	DATE
M A Gavett	12/04/00
SITE PROJECT QA OFFICER	DATE
Charles L. Foxx	12/04/00
FACILITY REPRESENTATIVE	DATE

© 2000 University of California

Radioisotopic content of the waste:

Variety of plutonium material types with different isotopic compositions. Am-241, Am-243, Np-237, and U-234 may be present at detectable concentrations as decay products of their plutonium precursors. Some processes separate plutonium and americium so that the waste will usually be enriched in americium, but may also be depleted in some cases. Np-237 may be the dominant radionuclide in some cases.

RCRA Constituents/EPA Hazardous Waste Numbers:

- D005 (barium) applies to salt waste generated under P/S code RA
- D006 (cadmium) and D008 (lead) apply to P/S codes ER and SS
- D006 (cadmium), D007 (chromium), D008 (lead), and D011 (silver): zinc metal waste from P/S code RA
- D006 (cadmium), D007 (chromium), D008 (lead), and D011 (silver): waste from P/S code PK
- D008 (lead): metal waste debris from all P/S codes in pyrochemical processes due to disposal of leaded gloves; after May 1992, leaded gloves were separated from other metal debris
- D009 (mercury): waste from P/S code SSMD during the summer of 1994
- D019 (carbon tetrachloride): waste from P/S code PTP (1986 to early 1988) June 1989 — Section 3.4.12
- No F or K codes
- P120 (vanadium pentoxide): waste from P/S code SD from 02/98 to 03/98; and P/S code SS from 5/27/98 to 6/10/98

Process waste volume (if known):

Waste volumes for each P/S code have not been tracked. Instead, waste items are segregated into similar material types and packaged in waste containers. Waste containers are segregated into waste streams in the Sampling Plan, and waste stream volumes are reported in that document.

Years of generation for the process waste: 1979–present

- Metal preparation and purification (pyrochemical processes)
- Aqueous waste treatment

This report focuses on metal preparation and purification processes (pyrochemical processes). Pyrochemical operations for plutonium include the following processes:

- metal preparation line (MPL) (P/S code MP),
- single-pass direct oxide reduction (DOR) and multiple-cycle direct oxide reduction (MCDOR) with in-situ regeneration ~~and electrorefining~~ (P/S code OR),
- electrorefining (ER) (initially P/S code ER; but now part of P/S code SS),
- molten salt extraction (MSE) (P/S code SS),
- salt stripping (salt stripping, salt distillation, carbonate oxidation, and oxygen sparging) (P/S code SS),
- pyroredox (P/S code RA),
- pickling (P/S code PK) and metal oxidation (P/S code MO).

NOTE: In contrast with most P/S codes, P/S code SS has grown over the years to encompass several activities that are different steps in the metal refining process, rather than representing a single distinct operation. As such, discussion of this P/S code is covered under more than one subsection.

Several research and development (R&D) processes also took place in pyrochemical operations:

- Chlorination/Reduction R&D (P/S code CRD),
- Chlorination Ca/Al Scrubbing R&D (P/S code SCB) (PYRO-24/ TWCP-3542), and
- Salt Stripping Materials Development (P/S code SSMD) (PYRO-22/TWCP-3542).

Each of these processes is described below. A complete listing of P/S codes for pyrochemical processes, their descriptions, feed materials, and inputs and outputs is found in Attachment 4. A simplified process flow diagram for pyrochemical processes is found in Attachment 5.

use past Verb tense

3.4.1 Metal Preparation Line (P/S code MP)

The MPL (conducted under P/S code MP) produced plutonium metal from the tetrafluoride salt until 1992 (TWCP-352). Plutonium oxides derived from the calcination of oxalate or peroxide precipitates (in nitrate operations) are reacted with hydrogen fluoride gas to form plutonium tetrafluoride. Because the plutonium oxide feed material had been purified in previous aqueous processes, it contained less than trace amounts of RCRA-regulated metal impurities. Input material came from the vault or P/S codes RB or RBJ (in nitrate operations). In the metal production process, plutonium oxide is converted to plutonium tetrafluoride, which in turn is reacted at high temperature (600°C to 2000°C) with metallic calcium in a magnesium oxide crucible. Iodine was added as a reaction initiator. The desired product was plutonium metal, which was recovered as a button by breaking the crucible and mechanically separating the contents. The metal was transferred to P/S codes SS or CA or sent to the vault.

The waste products were calcium fluoride (CaF_2) and calcium iodide (CaI_2), which formed a slag, magnesium oxide sand, and magnesium oxide crucible pieces. These were discarded under P/S code MP if the plutonium content was below the discard limit (DL). If the plutonium content was above the DL, the slag and crucible pieces were sent to nitrate operations (TWCP-AK-2.1-005,R.1) to be dissolved in nitric acid (HNO_3) and aluminum oxide (Al_2O_3). The leached materials were then discarded under P/S codes ED or SC, with the waste described as leached solids. The leachate was also treated in nitrate operations under P/S code DS to recover the plutonium. The magnesium oxide sand was reused if possible.

Little or no purification of the plutonium occurred during this process. However, because the reagents introduced no impurities and the highest purity feed material was used, the resulting metal was often satisfactory for high-purity applications. In this process, any trace metals were below the toxicity characteristic levels, so that the associated debris and slag wastes were below the toxicity characteristic levels in RCRA metal content (TWCP-2502).

3.4.2 DOR and MCDOR (P/S codes OR and SCB)

Prior to the multiple-cycle DOR process, a single pass DOR process was used for plutonium oxide (TWCP-2507, PYRO-14/TWCP-3542). Plutonium oxide and calcium metal are reacted in molten calcium chloride ($CaCl_2$) or $CaCl_2$ mixed with calcium fluoride (CaF_2), to produce plutonium metal. The reaction is conducted in a magnesium

Table 1. Process Feed Materials for Pyrochemical Operations

Feed Materials	Potential Presence of RCRA-Regulated Substances	P/S Codes in Pyrochemical Processes
Anode heels from P/S codes ER or SS (electrorefining step)	Typically contaminated with RCRA-regulated heavy metals Cd, Cr, Pb and Ag (D006, D007, D008, D011). Heavy metals As, Hg, and Se are not present because they are volatilized from the Pu oxide feed at the high temperatures to which this material is subjected in P/S codes ER, RM, and SS (electrorefining step).	ER, RA, SS
Miscellaneous materials with Pu contamination	Typically contaminated with RCRA-regulated heavy metals Cd, Pb, Hg, Ag and possibly Cr (D006, D008, D009, D011, and D007)	MO: Pu scrap and crucible pieces from P/S code SS PK: hardware, metal, anode chips from other P/S codes
Neptunium residues from vault	No RCRA-regulated substances	Neptunium (only active in 1993)
Pu chlorides and fluorides from various P/S codes	Variable purity	ER, SD, SS
Pu metal or metal alloy from vault or from various P/S codes	High purity, no RCRA-regulated substances, unless noted otherwise	CRD (variable purity), MO, SCB, SS, SSMD
Pu oxalates	Typically fairly pure, no RCRA substances present	MP
Pu oxides from vault or from P/S codes CA, DS, MA, RB, or RBJ	High purity oxides from P/S codes CA and MA. Variable purity oxides from P/S codes RB and RBJ; suspect contaminated with RCRA-regulated heavy metals Cd, Cr and Pb (D006, D007, D008).	MP (generally high purity), OR (variable purity), PTP (generally high purity)

3.5.2 Radionuclide Content Identification

The primary plutonium material type inputs for plutonium feed materials at Building PF-4 are listed in Table 2. The designation *material type* (MT) (e.g., MT 52) is used within the DOE Complex to describe the isotopic composition of common blends of radioactive materials used within the Complex. The material type notation was developed because it is a convenient way to describe material types that have very consistent isotopic compositions. Table 2 indicates the isotopic composition of the material types at the time the waste was characterized. The material type provides the basis for estimating an upper bound for U-234, U-235, and Am-241 contents based on the rate of decay of their precursors, Pu-238, Pu-239 and Pu-241, respectively.

Table 2. Average Isotopic Content ~~of Plutonium~~ Material Types and Enrichments (Weight %)

bounds dimensionless

Material Type (MT)	Plutonium isotope and half-life						Upper limits for weight ratios		
	Pu-238 (87.74 yr)	Pu-239 (24120 yr)	Pu-240 (6564 yr)	Pu-241 (14.35 yr)	Pu-242 (376,300 yr)	Pu-244 (8.26 x 10^7 yr)	U-234/ Total Pu	U-235/ Total Pu	Am-241/ Total Pu
MT 51	0.006	96.77	3.13	0.076	0.018	—	1×10^{-5}	0.001	0.0006
MT 52	0.01	93.78	6	0.2	0.02	—	2×10^{-5}	0.001	0.002
MT 53	0.03	91.08	8.45	0.366	0.071	—	7×10^{-5}	0.0009	0.003
MT 54	0.046	87.42	11.5	0.81	0.22	—	0.0001	0.0009	0.007
MT 55	0.06	83.88	14.73	1.03	0.304	—	0.0002	0.0009	0.009
MT 56	0.061	81.9	16.51	1.18	0.355	—	0.0002	0.0009	0.01
MT 57	0.433	74.63	20.7	2.55	1.69	—	0.001	0.0008	0.02
MT 42									
84%	1.02	1.37	10.32	3.13	84.14	0.02	0.003	1×10^{-5}	0.03
90%	0.72	1.26	6.4	1.86	89.77	—	0.002	1×10^{-5}	0.02
95%	0.45	0.56	2.47	0.906	95.58	0.029	0.001	6×10^{-6}	0.008
MT 83									
83%	83.89	13.8	1.9	0.32	0.09	—	0.26	0.0002	0.003
89%	89.26	10.07	0.633	0.021	0.015	—	0.28	0.0001	0.0002

Source: TWCP-698

Footnote: (see AK-02)

Table 3. Chemical Inputs to Processes Described in This Report

Chemical input	P/S codes in which RCRA-listed chemical is used	Comments on applicability of RCRA hazardous waste numbers (if any)
Gases		
Chlorine gas Hydrogen chloride Hydrogen fluoride Phosgene gas	~~PTP, CRD, SCB~~, SS ~~MP~~ ~~MP~~ ~~PTP~~	D001 and D002 do not apply to these gases because there are no free liquids in this waste. Also the gas cylinders are outside the building, and the gases are plumbed into the glovebox. D003 does not apply to phosgene because any excess chemical was passed through a solution of sodium hydroxide or potassium hydroxide, thereby producing a chloride salt solution.
Acids		
Hydrochloric acid Nitric acid		D002 does not apply to the solid wastes because there are no free liquids in this waste
Bases		
Potassium hydroxide Sodium hydroxide		D002 does not apply to the solid wastes because there are no free liquids in this waste
Inorganic chemicals		
Aluminum oxide Calcium chloride Calcium fluoride Iodine Lithium chloride Molybdenum oxide Potassium chloride Sodium chloride Vanadium pentoxide Zinc chloride	SD, SS	P120 applies to waste generated under P/S code SD from February to March 1998, and under P/S code SS from May 27, 1998 to June 10, 1998
Metals		
Bismuth metal Cadmium metal	ER, SS	D006 applies to a limited number of anode heels produced in P/S code ER and/or SS using cadmium as a solvent. However, these heels are in the vault, with no plans to purify them in the near future.
Calcium metal Gallium metal Lead metal	ER, SS	D008 applies to a limited number of anode heels produced in P/S code ER and/or SS using lead as a solvent. However, these heels are in the vault, with no plans to purify them in the near future
Mercury metal	SSMD	D009 applies to P/S code SSMD, in which it was used for about one week in the summer of 1994.
Organic chemicals		
Carbon tetrachloride	PTP	D019 applies to P/S code PTP in which this chemical was used between 1/87 and 6/89. F002 does not apply because carbon tetrachloride was used as a chlorination reagent, not as a solvent.
Freon	SCB	F002 does not apply to debris waste from P/S code SCB. While freon may have been used to clean parts (PYRO-24/TWCP-3542), the parts were air dried , and no free liquids are present in the waste.

- The Certification Plan (TWCP-697) and related Generator Attachments (TWCP-701) were implemented in 1987. Waste generators were required to sign a statement on the WODF documenting that the waste contained "no free liquids, pyrophorics, explosives, compressed gases, powders or materials other than the indicated matrix." Checkboxes were also present for indicating the presence or absence of corrosive chemicals. Full implementation of this generator statement occurred in May 1987.

- Waste management inspectors perform visual examination of the waste prior to its initial packaging, thus allowing the inspectors to verify the generator's WODF statement (TWCP-701, Sections 3.8.5 to 3.8.6). see (AK-02)

- ~~Explosives were prohibited from TA-55 until installation of the Impact Test Facility~~ in the early 1990s. Explosives continue to be banned in the solid waste streams up to the present time. If a misfire should occur, the requirement is to destroy the unspent powder by burning.

- The Waste Profile Request Form (WPRF), which has been in use at LANL since 1991, includes a statement which must be authenticated by the waste generator, that the waste is not ignitable (flash point >200°F), reactive, or corrosive.

- The TA-55 Generator Attachments to the Certification Plan were updated in 1995 (TWCP-700) but the prohibition on liquids in the waste, and the waste management inspection, remained in effect.

Hence, since the inception of operations at TA-55, corrosive and reactive wastes have been excluded from TA-55 solid wastes through the prohibition of liquids. Corroborative data are provided by screening tests on similar pyrochemical salts and residues (which contain higher amounts of plutonium) at the Rocky Flats Environmental Technology Site (TWCP-2501, page WF-34-10). These tests yielded liquid with pH greater than 3, so the wastes cannot be considered corrosive, and demonstrated that the liquid does not corrode steel at a rate greater than 0.25 inch per year.

The absence of these prohibited items is verified through radiography of each waste container and visual examination of selected containers during TWCP characterization activities. These data will be used to assess the accuracy of AK information in accordance with *Reconciliation of Visual Examination and Radiography Information* (TWCP-QP-1.1-028). Any free liquids are remediated, or the container is tagged as non-compliant by filing a Prohibited Waste Report in accordance with *Nonconformance Reporting and Tracking* (TWCP-QP-1.1-007).

7.0 VERIFICATION THAT INCOMPATIBLE CHEMICALS WERE PROHIBITED

Section 6.0 summarizes administrative controls in place at TA-55 that prohibit incompatible chemicals in the waste, and measures taken to verify their absence. In addition, all waste containers shipped from TA-55 to TA-54 for storage were evaluated

9.0 VERIFICATION THAT THERE ARE NO POLYCHLORINATED BIPHENYLS (PCBs) IN THE WASTE STREAM

No PCBs were introduced into the pyrochemical processes, based on documentation in TA-55 procedures reviewed during the AK investigation and summarized in the process inputs listed in Table 1, Table 3, and Attachment 4. Oils used in the reviewed processes include vacuum pump oils, and cutting fluids used for cooling purposes; none of these oils are known to contain PCBs. Any organic compounds present in the process materials would be destroyed or vaporized by the high temperatures of the pyrochemical processes that dominate pyrochemical processing. All transformers known to contain PCBs have been tracked from the time of startup of TA-55 in 1978. Whenever any transformer oil is drained, it is handled by a subcontractor who is wholly responsible for its disposal (TWCP-AK-2.1-005,R.1, Section 9.0). This oil does not enter the LANL disposal operations.

10.0 VERIFICATION THAT THERE IS NO ASBESTOS IN THE WASTE

Asbestos heating mantles were never used at TA-55. Asbestos gloves were used in glovebox operations in P/S codes OR and RM (TWCP-4162, TWCP-4166), which are discussed in section 3.4.2 of this report and in the *Process Acceptable Knowledge Summary Report for Special Processing at TA-55* (TWCP-AK-2.1-007,R.1), respectively. Asbestos-bearing transite was widely used until recently for thermal insulation, including as a coverplate over the furnace in glovebox wells, and as part of end plates on Lindberg furnaces (TWCP-4162, TWCP-4166). Although many Lindberg furnaces have been replaced with newer asbestos-free furnaces, some are still in use at TA-55. The transite would have been disposed either as metal or as ceramic and glass waste.

11.0 CITED PROCEDURES AND REQUIREMENTS DOCUMENTS

- 40 CFR Part 261, Subpart C—Characteristics of hazardous waste, Sections 261.21 (*Characteristic of ignitability*), 261.22 (*Characteristic of corrosivity*), 261.23 (*Characteristic of reactivity*), and 261.24 (*Toxicity characteristic*)

- 40 CFR Part 261, Subpart D—Lists of hazardous waste, Sections 261.31 *(Hazardous wastes from non-specific sources),* 261.32 *(Hazardous wastes from specific sources),* and 261.33 *(Discarded commercial chemical products, off-specification species, container residues, and spill residues thereof)*

- 49 CFR Subpart C—Segregation and separation chart of hazardous materials. Section 177.848, *Segregation of hazardous materials*

- *Acceptable Knowledge Documentation* (TWCP-QP-1.1-021,R.5)

- ~~*Los Alamos National Laboratory Transuranic Waste Characterization Sampling Plan*~~ (TWCP-PLAN-0.2.7-001,R.3)

Delete

- *Nonconformance Reporting and Tracking* (TWCP-QP-1.1-007)
- *Process Acceptable Knowledge Summary Report for Chloride Operations at TA-55* (TWCP-AK-2.1-002,R.1)
- *Process Acceptable Knowledge Summary Report for Metal Operation Processes at TA-55* (TWCP-AK-2.1-003,R.1)
- *Process Acceptable Knowledge Summary Report for Miscellaneous Operations at TA-55* (TWCP-AK-2.1-004,R.1)
- *Process Acceptable Knowledge Summary Report for Nitrate Operations at TA-55* (TWCP-AK-2.1-005,R.1)
- *Process Acceptable Knowledge Summary Report for Special Processing at TA-55* (TWCP-AK-2.1-007,R.1)
- *Reconciliation of Visual Examination and Radiography Information* (TWCP-QP-1.1-028)
- *Waste Acceptance Criteria for the Waste Isolation Pilot Plant* (DOE/WIPP-069)
- *Waste Analysis at Facilities that Generate, Treat, Store and Dispose of Hazardous Waste* (EPA/OSWER 9938.4-03)
- Waste Analysis Plan (Attachment B) to the *Hazardous Waste Facility Permit Issued to the Waste Isolation Pilot Plant* (EPA No. NM4890139088)
- *Waste Characterization Data Reconciliation with Acceptable Knowledge* (TWCP-DTP-1.2-064)

ACCEPTABLE KNOWLEDGE ROADMAP

P/S codes: CRD, ER, MO, MP, OR, Neptunium, PK, PTP, RA, SCB, SD, SS, and SSMD.

Copies of these documents are in the TWCP RMDC Center.

TWCP Record No.	Information Category Code*	Information	Source	Summary	Limitations
TWCP-352	B	Description of plutonium recovery processes	*Wastes from Plutonium Conversion and Scrap Recovery Operations,* LA-11069-MS, March 1988.	Document describes the Pu residues and the various treatment approaches used in recovering plutonium from scrap	Document does not give information about RCRA constituents introduced or present in the processes
TWCP-614	D	All TA-55 waste is Defense related.	Memo from Doug Sankey.	All TA-55 waste is Defense related.	Budget information may not be acceptable.
TWCP-697	C	Waste management requirements to meet WIPP WAC requirements were formalized in 1984.	*Los Alamos TRU Waste Certification Plan for Newly Generated TRU Waste,* WCP-HSE7-CPL-01, R.2 (November 1984)	Waste management requirements to meet WIPP WAC requirements. Generator Attachments were used to describe and reference specific generator procedures.	Overview document - Generator Attachments provide more detailed information.
TWCP-698	B	Gives Material Type compositions	NMT Memo, NMT-7 WM/EC-96-032 Benchmark Environmental Corp. Memo, AL-7193 BEC	Gives Material Type compositions	Does not give information on how material may fractionate in TA-55 waste processes.
TWCP-700	C	*Attachment 3 to the Los Alamos TRU Waste Certification Plan for Newly Generated TRU Waste,* R05	*NMT-7 Attachment, January 1995,* TRUWM-TA55-CPA-03,R00	Documents how controls to meet WIPP WAC were implemented and how independent verification was accomplished.	Information is not extremely detailed.
TWCP-701	C	*TA-55 Generator Attachment* to the *TRU Waste Certification Plan for Newly Generated TRU Waste*	*TA-55 Attachment, 1987,* TRU-MST12-CPA-03,R00	Documents how controls to meet WIPP WAC were implemented and how independent verification was accomplished.	Information is not extremely detailed.

Add to the roadmap: TWCP-samplingplan < AK reports. See AK-02.

* Information Category Codes: A = forms intended for use in waste certification, B = data from controlled databases and published documents, C = unpublished data, and D = interviews, memos, and letters

TWCP Record No.	Information Category Code*	Information	Source	Summary	Limitations
TWCP-3542 (UCNI) (PYRO-22)	D	Acceptable Knowledge Interview Form for Pyrochemical Processing	Peter Lopez, NMT-5 Walt Griego, NMT-2	Answers to questions about P/S code SSMD	Project occurred long enough in the past that SMEs had difficulty recalling details.
TWCP-3542 (UCNI) (PYRO-23)	C	Procedure for Salt Distillation (P/S code SD)	TA-55 Document, 102-MPP-R01	Contains materials used in the process	No RCRA analyses documents
TWCP-3542 (UCNI) (PYRO-24)	D	Acceptable Knowledge Interview Form for Pyrochemical Processing	Mike West, NMT-2 Greg Bird, NMT-2	Answers to questions regarding P/S codes SBB and SCB. No RCRA-listed metals used in processes, Freon may have been used to clean parts.	SMEs couldn't recall some specific information.
TWCP-3542 (UCNI) (PYRO-25)	C	Procedure for Fused Salt Extraction of Americium from Plutonium Metal	TA-55 Document 440-MPP-R00 – R08	Contains materials used in the process	No RCRA analyses documents
TWCP-3542 (UCNI) (PYRO-27)	D	Acceptable Knowledge Interview Form for Pyrochemical Processing	Jim Foxx, NMT-7	Answers to questions regarding usage timeframe for vanadium pentoxide	Answers to specific questions or topics
TWCP-3542 (UCNI) (PYRO-28)	C	Acceptable Knowledge Interview Form for Pyrochemical Processing	Jim Foxx, NMT-7 9/23/99	Answers to questions regarding processes done in Special Processing and Pyrochemical Processes	Answers to specific questions
delete TWCP-3543 (~~SP-40~~) (UCNI)	D	Acceptable Knowledge Interview Form for Pyrochemical Processing	Jim Foxx, NMT-7	Answers to questions regarding ~~processes done in Special~~ Processing and Pyrochemical operations	Answers to specific questions or topics
TWCP-3730 (UCNI)	B	Pyrophoricity characterization	Characterization of Direct Oxide Salts (LA-CP-95-0098)	Hydrogen generation and pyrophoricity of DOR salts. Also gives reference for MSE, ER, and Cr-containing salts.	None
TWCP-3731	D	Sodium pyrophoricity in pyrochemical salts	Memo (MST-12-ARO-88-052)	Treatment of sodium in salts is effective	Sodium only

* Information Category Codes: A = forms intended for use in waste certification, B = data from controlled databases and published documents, C = unpublished data, and D = interviews, memos, and letters

TIMELINE FOR PYROCHEMICAL PROCESSES

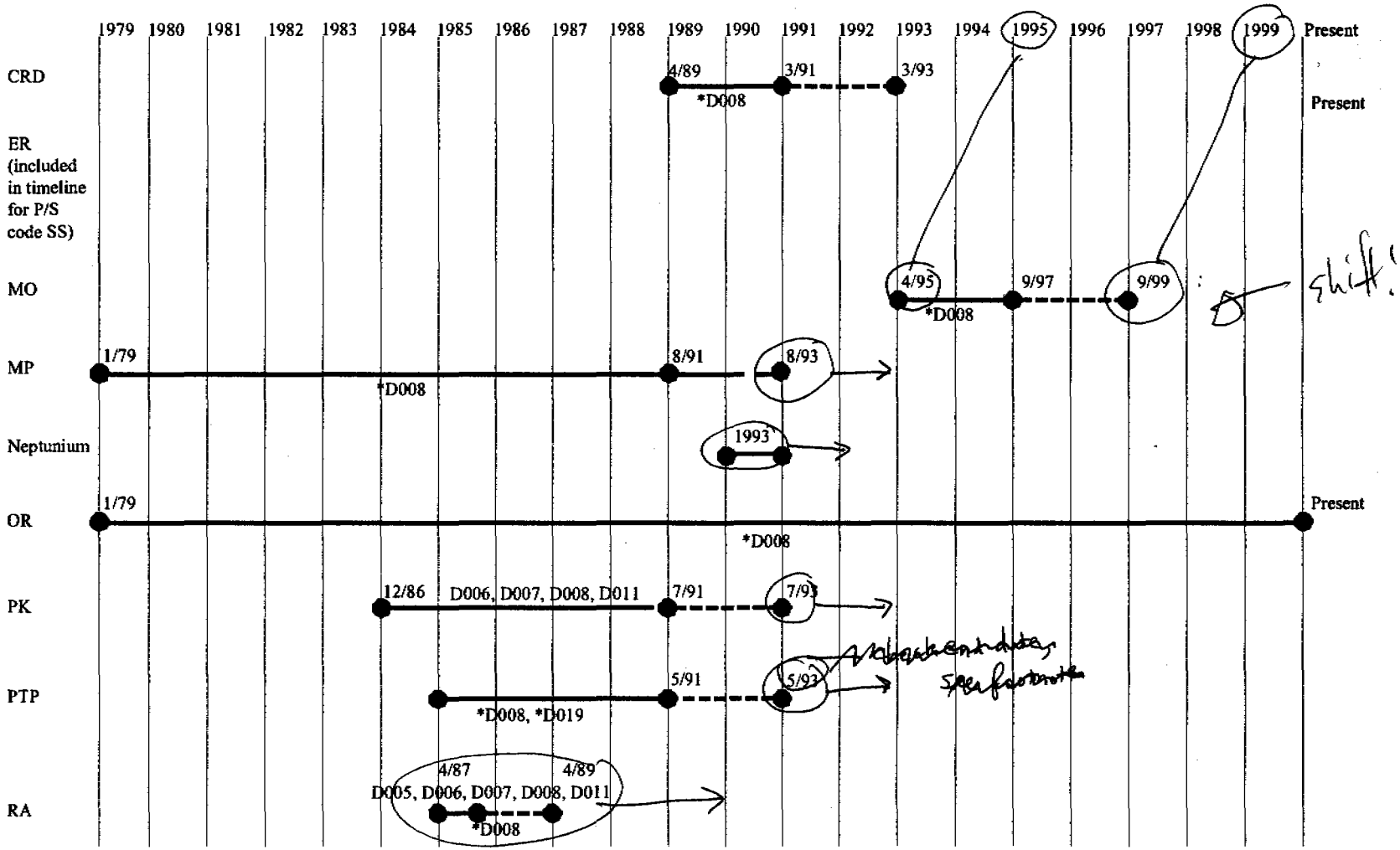

TIMELINE FOR PYROCHEMICAL PROCESSES (continued)

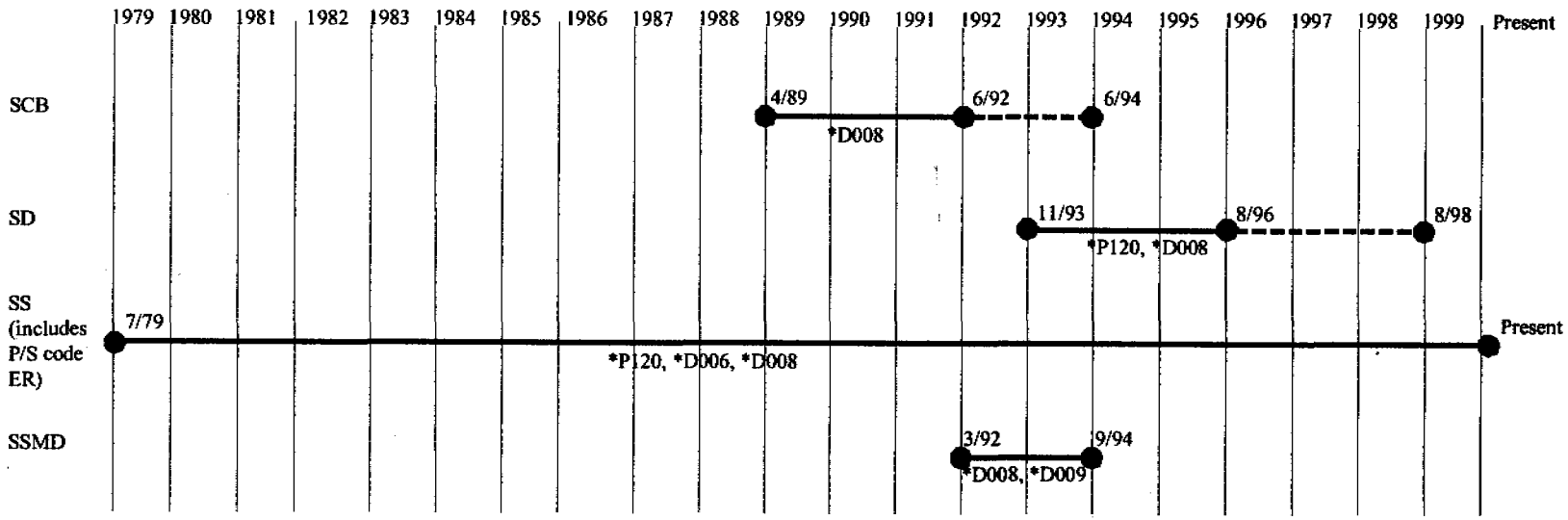

*Notes on time-dependence of RCRA codes
P120 = applies to waste generated under P/S code SD from 2/98 - 3/98 and/or SS and under P/S code SS from 5/27/98 - 6/10/98
D006 = applies to crucibles and salts discarded under P/S code ER from 1987 to 1989
D008 = applies to leaded gloves which where discarded in a separate waste stream after 1992, still under the originating P/S code; also D008 applies to [copy from D006 footnote]
D009 = applies to waste discarded under P/S code SSMD from 6/94 - 8/94
D019 = applies to waste discarded under P/S code PTP from 1/87 - 6/89 ~~6/98~~ so: PTP inactive after 6/89 on timeline

Draft #2
5/1/01 JTM

TA-55 PLUTONIUM FACILITY
ACCEPTABLE KNOWLEDGE REPORT

REPORT TITLE: Process Acceptable Knowledge Summary Report for Pyrochemical Processes at TA-55

REPORT NUMBER: TWCP-AK-2.1-006,R.2a (LA-UR-01-)

checked against ~~Draft #3~~ ~~JTM~~ ~~5-6-01~~

WASTE GENERATED FROM PROCESS/STATUS CODES: CRD, ER, MO, MP, Neptunium, OR, PK, PTP, RA, SCB, SD, SS, and SSMD

EFFECTIVE DATE: _____

NEXT REVIEW DATE: _____

DOCUMENT PREPARER:

_____ _____
NAME DATE

APPROVALS:

_____ _____
INDEPENDENT TECHNICAL REVIEWER/EDITOR DATE

_____ _____
SITE PROJECT MANAGER DATE

_____ _____
WASTE CERTIFICATION OFFICIAL DATE

_____ _____
SITE PROJECT QA OFFICER DATE

_____ _____
FACILITY REPRESENTATIVE DATE

~~©2000~~ ? 2001 University of California

HISTORY OF REVISIONS

Revision No.	Date	Pages Revised	Reason for Change
0	07/13/00	—	New report (TWCP-03939)
1	12/04/00	All	Make report a controlled document and respond to CAR-00-036
2		All	Respond to CBFO comments, ~~and~~ update
			with new AK information ~~and~~
			~~to~~

CONTENTS

Section **Page**

ACRONYMS iv

TA-55 PROCESS/STATUS (P/S) CODE INDEX vi

PROCESS ACCEPTABLE KNOWLEDGE SUMMARY vii

1.0 INTRODUCTION 1

2.0 METHODOLOGY USED TO SEARCH FOR AK RECORDS 1

New 3.2 Basis, Rationale, and Assumptions used to Delineate the waste Streams

3.0 DESCRIPTION OF THE PROCESS WASTE 3
- 3.1 Facility and Mission 3
- 3.~~2~~3 Waste Physical Form and Content Description 3
- 3.~~3~~4 Waste Volume and Time Period of Waste Generation 4
- 3.~~4~~5 Waste Generation Processes 4
- 3.~~5~~6 Material Inputs to the Waste Generation Process es 13

4.0 ASSIGNMENT OF EPA HAZARDOUS WASTE NUMBERS 17
- 4.1 F, K, and P Listings 17
- 4.2 Toxicity Listings 17
- ~~4.3 Corrosivity, Reactivity, and Ignitability ..... 19~~

~~5.0 DETERMINATION OF THE RADIOISOTOPIC COMPOSITION ..... 19~~

5 ~~6~~.0 VERIFICATION THAT IGNITABLE, REACTIVE, AND CORROSIVE WASTES WERE EXCLUDED 19

6 ~~7~~.0 VERIFICATION THAT INCOMPATIBLE CHEMICALS WERE PROHIBITED 20

7 ~~8~~.0 VERIFICATION THAT THERE ARE NO COMPRESSED GASES, FREE LIQUIDS, NONRADIONUCLIDE PYROPHORICS, SEALED CONTAINERS GREATER THAN FOUR LITERS IN VOLUME, OR >1% RADIONUCLIDE PYROPHORICS 21

8 ~~9~~.0 VERIFICATION THAT THERE ARE NO POLYCHLORINATED BIPHENYLS (PCBs) IN THE WASTE STREAM 22

9 ~~10.0~~ CITED PROCEDURES AND REQUIREMENTS DOCUMENTS 22

Tables

1 Process Feed Materials for Pyrochemical Operations 14
2 Average Isotopic Content of Plutonium Material Types and Enrichments 15
3 Chemical Inputs to Processes Described in This Report 18

Attachments

1 Acceptable Knowledge Roadmap (8 pages)
2 LANL and TA-55 Sites Maps (2 pages)
3 Timeline for Pyrochemical Processes (3 pages)
4 Process Inputs and Outputs (4 pages)
5 Simplified Process Status Diagram (1 page)

ACRONYMS

AK	acceptable knowledge
CFR	Code of Federal Regulations
D	EPA hazardous waste number prefix for wastes with hazardous characteristics, defined in 40 CFR Subpart C, Sections 261.21 to 261.24
DL	discard limit
DOE	U.S. Department of Energy
DOR	direct oxide reduction (process conducted under P/S code OR)
DWLS	Discardable Waste Log Sheet
EPA	U.S. Environmental Protection Agency
ER	electrorefining
F	EPA hazardous waste number prefix for hazardous wastes from non-specific sources, defined in 40 CFR Subpart D, Section 261.31
HEPA	high-efficiency particulate air
HWN → K	EPA hazardous waste number prefix for hazardous wastes from specific sources, defined in 40 CFR Subpart D, Section 261.32
LANL	Los Alamos National Laboratory
MCDOR	multicycle direct oxide reduction
MPL	metal preparation line
MSE	molten salt extraction
MT	Material Type
NMT	Nuclear Material Technology
P	EPA hazardous waste number prefix for discarded commercial chemical products, off-specification species, container residues, and spill residues, defined in 40 CFR Subpart D, Section 261.33
P/S [code]	process/status [code]
PCB	polychlorinated biphenyl
PF-4	Plutonium Facility, Building 4
QA	quality assurance
R&D	research and development
RCRA	Resource Conservation and Recovery Act
RD&D	research, development and demonstration
RLWTF	Radioactive Liquid Waste Treatment Facility
RMDC	records management/document control
Sampling Plan	*Los Alamos National Laboratory Transuranic Waste Characterization Sampling Plan* (TWCP-PLAN-0.2.7-001)
SME	subject matter expert
SOP	safe/standard operating procedure
TA	technical area
TRU	transuranic
TWCP	Transuranic Waste Characterization/Certification Program
UCNI	Unclassified Controlled Nuclear Information
WAC	waste acceptance criteria
WIPP WAC	*Waste Acceptance Criteria for the Waste Isolation Pilot Plant* (DOE/WIPP-069)

Change all sections 3.4... to 3.5...

TA-55 PROCESS/STATUS (P/S) CODE INDEX

Note: This index indicates the main process AK summary report and report section that covers each P/S code mentioned in this report.

P/S Code	P/S Name	Process AK Summary Report and Report Section*	
CA	Casting	Metal Operation Processes	3.4.2, Att. 4
CRD	Chlorination/reduction RD&D	Pyrochemical Processes	3.4, Att. 4
CX	Chloride Anion Exchange	Chloride Operations	3.4.2, 3.4.3, 3.4.4, Att. 4
CXL	Experimental Chloride Extraction Line	Chloride Operations	3.4.2, 3.4.3, Att. 4
DO	Dissolution of Oxide	Special Processing	3.4.3, 3.4.5, 3.4.7, Att. 4
DS	Ion Exchange	Nitrate Operations	3.4.3, Att. 4
ED	Cascade Dissolver	Nitrate Operations	3.4.2, Att. 4
ER	Electrorefining	Pyrochemical Processes	3.4.4, Att. 4
LR	Ion Exchange	Nitrate Operations	3.4.3, Att. 4
MA	Machining	Metal Operation Processes	3.4.2, Att. 4
MO	Metal Oxidation, Room 429	Pyrochemical Processes	3.4.9, Att. 4
MP	Metal Preparation	Pyrochemical Processes	3.4.1, Att. 4
NEPTUNIUM	Neptunium	Pyrochemical Processes	3.4.10, Att. 4
OR	Direct Oxide Reduction	Pyrochemical Processes	3.4.2, Att. 4
PK	Pickling and Nitrate Holding	Pyrochemical Processes	3.4.11, Att. 4
PTP	Plutonium Trichloride Preparation	Pyrochemical Processes	3.4.12, Att. 4
RA	Recovery of Anodes	Pyrochemical Processes	3.4.6, Att. 4
RB	Roasting and Blending	Nitrate Operations	3.4.3, Att. 4
RBJ	Roasting and Blending Jr	Nitrate Operations	3.4.3, Att. 4
SC	Cascade Dissolver, G437	Nitrate Operations	3.4.2, Att. 4
SCB	Chlorination Ca/Al Scrubbing RD&D	Pyrochemical Processes	3.4.2, Att. 4
SD	Salt Distillation	Pyrochemical Processes	3.4.5, Att. 4
SS	Salt Stripping	Pyrochemical Processes	3.4.3, 3.4.4, 3.4.5, 3.4.7, 3.4.8, Att. 4
SSMD	SS Material Development	Pyrochemical Processes	3.4, Att. 4
WM	Waste Management	Miscellaneous Operations	3.4.9, Att. 4

* Process AK summary reports: Chloride Operations (TWCP-AK-2.1-002,R.~~1~~), Metal Operation Processes (TWCP-AK-2.1-003,R.~~1~~), Miscellaneous Operations (TWCP-AK-2.1-004,R.~~1~~), Nitrate Operations (TWCP-AK-2.1-005,R.~~1~~), Pyrochemical Processes (this report), Special Processing (TWCP-AK-2.1-007,R.~~1~~)

R.2

PROCESS ACCEPTABLE KNOWLEDGE SUMMARY

Waste-generating process: Pyrochemical Processes

Summary Cat. Gr. Waste

P/S codes: CRD, ER, MO, MP, Neptunium, OR, PK, PTP, RA, SCB, SD, SS, and SSMD

Type of waste generated:

Retrievably stored and newly generated, mixed and non-mixed pyrochemical salts and debris.

Site: LANL

Facility Mission (including defense and non-defense programs):

TA-55 has extensive capabilities for the extraction and recovery of plutonium from residues and scraps generated from operations at various LANL facilities and other DOE sites in the defense complex. The recovered plutonium is converted into pure plutonium feedstock. These manufacturing and recovery operations, as well as associated maintenance operations, and TA-55 plutonium research are the sources of TRU waste contaminated scrap, residues, and debris generated at TA-55. The scrap and residues are processed to recover as much plutonium as practicable before disposal. Wastes from pyrochemical operations are generated from plutonium metal preparation and purification for defense programs; these wastes may have been generated and produced in the same rooms as were used for non-defense activities and so were not segregated from non-defense waste until August 27, 1998.

Area(s) or building(s) where the process waste was generated (including operations carried out in those areas):

TA-55 Plutonium Facility (Building PF-4), 400 Wing. Pyrochemical operations include processes for the preparation and purification of plutonium metal.

Description of the process waste (physical form and typical content description):

Waste from pyrochemical operations consists primarily of slag containing chloride salts, calcium fluoride and calcium oxide salts; crucibles; debris waste including cellulosic, plastic, rubber, glass, and metal items. Liquid waste is sent to the Radioactive Liquid Waste Treatment Facility at TA-50.

Description of the waste-generating process:

The overall goal of the pyrochemical operations is to prepare plutonium from impure metal, metal alloys, oxides, scrap, and residues and produce a purified plutonium metal. Processes include the metal preparation line, single-pass and multicycle direct oxide reduction, electrorefining, molten salt extraction, salt stripping, salt distillation, carbonate oxidation, oxygen sparge, and pyroredox.

Process feed:

Plutonium metal, metal alloys, or oxides; plutonium scrap; Np-237 (briefly in 1993).

Summary Category Groups: S3000, S5000
Waste Matrix Codes:
S3000, S5100, S5300, S5400

Pa-231 and Cs-137 may be present in trace amounts due to their widespread presence as contaminants in TA-55 operations.

Radioisotopic content of the waste:

Variety of plutonium material types with different well-defined isotopic compositions. Am-241, ~~Am-243~~, Np-237, and U-234 may be present at detectable concentrations as decay products of their plutonium precursors. Some processes separate plutonium and americium or plutonium and uranium, so that the waste will usually be enriched in ~~americium~~ Am-241 or U-234, but may also be depleted in some cases. Np-237 may be the dominant radionuclide in some cases.

RCRA Constituents/EPA Hazardous Waste Numbers: ~~(HWNs)~~ ~~No HWNs apply to P/S codes CRD, Pu-Th and~~

- D005 (barium) applies to salt waste generated under P/S code RA
- D006 (cadmium) and D008 (lead) apply to P/S codes ER and SS
- D006 (cadmium), D007 (chromium), D008 (lead), and D011 (silver): zinc metal waste from P/S code RA
- D006 (cadmium), D007 (chromium), D008 (lead), and D011 (silver): waste from P/S code PK
- D008 (lead): metal waste debris from all P/S codes in pyrochemical processes due to disposal of leaded gloves; after May 1992, leaded gloves were separated from other metal debris
  ~~D008 also applies to P/S codes ER~~
- D009 (mercury): waste from P/S code SSMD during the summer of 1994
- D019 (carbon tetrachloride): waste from P/S code PTP (1986 to June 1989)
- No F or K codes
- P120 (vanadium pentoxide): waste from P/S code SD from 02/98 to 03/98; and P/S code SS from 05/27/98 to 06/10/98

• D008 for leaded gloves is the only HWN that applies to ~~metal~~ waste from P/S codes CRD, MO, MP, Neptunium, OR, and SCB.

last bullet

Process waste volume (if known):

Waste volumes for each P/S code have not been tracked. Instead, waste items are segregated into similar material types and packaged in waste containers. Waste containers are segregated into waste streams in the Sampling Plan, and waste stream volumes are reported in that document.

Years of generation for the process waste: 1979–present

ACCEPTABLE KNOWLEDGE SUMMARY REPORT FOR PYROCHEMICAL PROCESSES AT TA-55

1.0 INTRODUCTION

All transuranic (TRU) waste must be sufficiently characterized and certified before it is shipped to the Waste Isolation Pilot Plant (WIPP). The U.S. Environmental Protection Agency (EPA) allows use of acceptable knowledge (AK) for waste characterization. EPA uses the term AK in its guidance document, *Waste Analysis at Facilities that Generate, Treat, Store and Dispose of Hazardous Waste.* Attachment B, Waste Analysis Plan, to the *Hazardous Waste Facility Permit Issued to the Waste Isolation Pilot Plant* (EPA No. NM4890139088) (WIPP WAP) defines AK and provides guidelines on how AK should be obtained and documented.

This process AK summary report was prepared in accordance with *Acceptable Knowledge Documentation* (TWCP-QP-1.1-021~~R.5~~). The primary purpose of this report is to systematically organize, evaluate, and summarize detailed AK information about individual processes that generate TRU waste in the Plutonium Facility at Technical Area (TA) 55, one of the TRU waste generators ~~used by one of the TRU waste generators~~ at Los Alamos National Laboratory (LANL). By doing so, this report provides detailed technical support for ~~one or more~~ several waste stream AK summary reports that include these process wastes.

2.0 METHODOLOGY USED TO SEARCH FOR AK RECORDS

The AK search for the information related to ~~Technical Area~~ (TA)-55 waste streams resulting from pyrochemical processes covered:

- Review of the *Los Alamos National Laboratory Transuranic Waste Characterization Sampling Plan* (TWCP-PLAN-0.2.7-001~~R.3~~) (Sampling Plan) that includes information regarding all TRU waste streams

- Review of documents related to waste generation and waste management activities at TA-55 as listed on the Acceptable Knowledge Roadmap (Attachment 1)

- Interviews with personnel involved with waste generation and waste management at TA-55 as listed on the Acceptable Knowledge Roadmap (Attachment 1)

NOTE: Much of the AK information related to pyrochemical processes is contained in Transuranic Waste Characterization/Certification Project (TWCP) Record No. TWCP-3542. Individual documents in this record have been assigned a separate identifier, PYRO-nn, where nn is a sequential 1- or 2-digit number. This referencing nomenclature is used throughout this report and its attachments.

- Analyses of individual processes generating waste, and evaluations of the potential for Resource Conservation and Recovery Act (RCRA)-regulated constituents to be

3.0 DESCRIPTION OF THE PROCESS WASTE

The following sections describe processes used in pyrochemical processes, and identify the resulting wastes as well as outputs that are sent to other operations, such as nitrate operations, for further processing.

3.1 Facility and Mission

The TA-55 Plutonium Facility (Building PF-4) recovers plutonium from scrap and residues generated throughout the U.S. Department of Energy (DOE) defense complex, and processes it into pure plutonium oxide for conversion to metal and other products. A LANL site map and a detailed map of the buildings at TA-55, including Building PF-4, are shown in Attachment 2.

Processes in pyrochemical operations were solely defense related (TWCP-614, TWCP-4162). However, wastes from various processes were not segregated by funding source, waste-generating process, or waste-generating location (e.g., room or glovebox) until recently (August 27, 1998), but rather were segregated and packaged based on waste type (TWCP-887, TWCP-4162, TWCP-4167). Consequently, a single waste container often contains wastes from multiple processes. Some debris waste was also co-mingled with room trash related to these same operations (both defense and non-defense), and was initially boxed as low-level waste. Subsequently, some of these waste boxes were returned for disposal in drums as TRU waste when on-site radioassay results showed them exceeding the low-level discard limits (TWCP-816).

Insert new 3.2 Basis, Rationale, and Assumptions used to Delineate the Waste Streams [See file Process AK Section 3-2.doc]

3.~~2~~3 Waste Physical Form and Content Description

Wastes generated during pyrochemical operations ~~are defined as retrievably stored TRU waste. The waste~~ contains a variety of pyrochemical chloride salts as well as mixtures of calcium fluoride and calcium oxide salts, that were generated as byproducts of the operations and that met the discard limit for plutonium content. Debris wastes and caustic liquid wastes sent to the Radioactive Liquid Waste Treatment Facility (RLWTF) at TA-50 are also covered by this process AK report. General debris waste categories from pyrochemical processes include

- Cellulose-based waste (for example, paper, cloth)
- Plastic-based waste (for example, gloves, tape, labware)
- Rubber
- Magnesium oxide crucibles
- Leaded rubber

- Metal debris (for example, tantalum crucibles, wire, hose clamps, tools, labware)
- Glass debris

These debris items are contaminated with small amounts of radioactive and chemical substances from pyrochemical processes.

3.~~3~~4 Waste Volume and Time Period of Generation

EPA hazardous waste numbers (HWNs)

This report covers waste streams generated from 1979, when pyrochemical processes first began in Building PF-4, to the present. Wastes from the pyrochemical processes have different associated ~~RCRA codes~~ depending on the time period during which they were generated. The P/S codes, their time period of generation, and corresponding RCRA codes are shown graphically in Attachment 3, Timeline for Pyrochemical Processes.

Waste volumes for each P/S code have not been tracked. Instead, waste items are segregated into similar material types and packaged in waste containers. Waste containers are assigned to waste streams in the Sampling Plan, and waste stream volumes are reported in that document.

3.~~4~~5 Waste Generation Processes

The following subsections describe the generation of waste by pyrochemical processes, as well as product and waste outputs to other processes or operations.

Manufacturing and research operations performed at TA-55 results in the production of plutonium-contaminated scrap and residues. These residues are processed to recover as much plutonium as is practical (TWCP-352). TA-55 has extensive capabilities for the extraction and recovery of plutonium from residues and scraps generated from operations at various LANL facilities. The metal production and purification operations as well as associated maintenance operations are the sources of most TRU waste generated from pyrochemical processing.

Detailed background information about the TA-55 plutonium recovery processes can be found in *Waste from Plutonium Conversion and Scrap Recovery Operations* (TWCP-352 and TWCP-886).

This report focuses on metal preparation and purification processes (pyrochemical processes). Pyrochemical operations for plutonium include the following processes:

- metal preparation line (MPL) (P/S code MP),
- single-pass direct oxide reduction (DOR) and multiple-cycle direct oxide reduction (MCDOR) with in-situ regeneration (P/S code OR),
- electrorefining (ER) (initially P/S code ER; but now part of P/S code SS),
- molten salt extraction (MSE) (P/S code SS),
- salt stripping (salt stripping, salt distillation, carbonate oxidation, and oxygen sparging) (P/S code SS),
- pyroredox (P/S code RA),
- pickling (P/S code PK) and metal oxidation (P/S code MO).

NOTE: In contrast with most P/S codes, P/S code SS has grown over the years to encompass several activities that are different steps in the metal refining process, rather than representing a single distinct operation. As such, discussion of this P/S code is covered under more than one subsection.

Several research and development (R&D) processes also took place in pyrochemical operations:

- Chlorination/Reduction R&D (P/S code CRD),
- Chlorination Ca/Al Scrubbing R&D (P/S code SCB) (PYRO-24/ TWCP-3542), and
- Salt Stripping Materials Development (P/S code SSMD) (PYRO-22/TWCP-3542).

Each of these processes is described below. A complete listing of P/S codes for pyrochemical processes, their descriptions, feed materials, and inputs and outputs is found in Attachment 4. A simplified process flow diagram for pyrochemical processes is found in Attachment 5.

3.~~4~~5.1 Metal Preparation Line (P/S code MP)

The MPL (conducted under P/S code MP) produced plutonium metal from the tetrafluoride salt until 1992 (TWCP-352). Plutonium oxides derived from the calcination of oxalate or peroxide precipitates (in nitrate operations) were reacted with hydrogen fluoride gas to form plutonium tetrafluoride. Because the plutonium oxide feed material had been purified in previous aqueous processes, it contained less than trace

amounts of RCRA-regulated metal impurities. Input material came from the vault or P/S codes RB or RBJ (in nitrate operations). In the metal production process, plutonium oxide was converted to plutonium tetrafluoride, which in turn was reacted at high temperature (600 °C to 2000 °C) with metallic calcium in a magnesium oxide crucible. Iodine was added as a reaction initiator. The desired product was plutonium metal, which was recovered as a button by breaking the crucible and mechanically separating the contents. The metal was transferred to P/S codes SS or CA or sent to the vault.

The waste products were calcium fluoride (CaF_2) and calcium iodide (CaI_2), which formed a slag, magnesium oxide sand, and magnesium oxide crucible pieces. These were discarded under P/S code MP if the plutonium content was below the discard limit (DL). If the plutonium content was above the DL, the slag and crucible pieces were sent to nitrate operations (*Process Acceptable Knowledge Summary Report for Nitrate Operations at TA-55* [TWCP-AK-2.1-005]) to be dissolved in nitric acid (HNO_3) and aluminum oxide (Al_2O_3). The leached materials were then discarded under P/S codes ED or SC, with the waste described as leached solids. The leachate was also treated in nitrate operations under P/S code DS to recover the plutonium. The magnesium oxide sand was reused if possible.

Little or no purification of the plutonium occurred during this process. However, because the reagents introduced no impurities and the highest purity feed material was used, the resulting metal was often satisfactory for high-purity applications. In this process, any trace metals were below the toxicity characteristic levels, so that the associated debris and slag wastes were below the toxicity characteristic levels in RCRA metal content (TWCP-2502).

3.~~4~~5.2 DOR and MCDOR (P/S codes OR and SCB)

Prior to the multiple-cycle DOR process, a single pass DOR process was used for plutonium oxide (TWCP-2507, PYRO-14/TWCP-3542). Plutonium oxide and calcium metal are reacted in molten calcium chloride ($CaCl_2$) or $CaCl_2$ mixed with calcium fluoride (CaF_2), to produce plutonium metal. The reaction is conducted in a magnesium oxide (MgO) crucible at 820°C to 875°C. Any arsenic, mercury or selenium present in the impure plutonium oxide would be driven off due to their volatility at this high temperature (TWCP-1258). The reaction proceeds to completion when excess calcium is present and when sufficient $CaCl_2$ is available to dissolve the calcium oxide (CaO) product.

toxicity characteristic metals were well below RCRA regulatory limits (TWCP-2540), as follows:

Metal	Totals Analysis	Calculated TCLP Result	Regulatory Level
Cadmium	<10 ppm	<0.5 mg/L	1 mg/L
Chromium	30 ppm	1.5 mg/L	5 mg/L
Lead	20 ppm	1 mg/L	5 mg/L
Silver	2 ppm	0.1 mg/L	5 mg/L

All metal impurities except barium would be reduced to the metal state and remain with the plutonium metal phase rather than be transferred into the molten salt phase. Hence, the molten salt phase is purified of regulated metals except for barium. These regulated metals will be present in the waste salt at levels below the toxicity characteristic levels. Because the salts are reused, only the initial reduction in fresh salt would contain any of the salt feed impurities.

The waste salt, crucibles, and debris waste items associated with this process are discarded under P/S codes OR or CXL. Asbestos gloves were also used in glovebox operations under P/S code OR, and were disposed as part of ceramic and glass debris wastes.

P/S code SCB was an R&D effort examining the feasibility of this process at extracting Pu (MT 52) from salt before discarding the salt. Pu was chlorinated then reduced to the metal with calcium metal (similar to DOR).

5

3.~~4~~.3 Molten Salt Extraction (P/S code SS)

MSE is used to separate americium and the more reactive elements such as rare earth elements, alkali metals, and alkaline earth metals from plutonium metal (PYRO-4/TWCP-3542, TWCP-352). This process is employed only if the americium content is greater than 1000 ppm (TWCP-2506). In the original process, which operated from 1979 to 1988, magnesium chloride ($MgCl_2$) was added to the impure plutonium metal in a molten salt of sodium chloride (NaCl) and potassium chloride (KCl), contained in a MgO crucible and heated to 750°C. The magnesium chloride oxidized americium to $AmCl_3$, although some plutonium was also converted to the chloride salt form. In 1988, the MSE process was converted to use plutonium chloride ($PuCl_3$) produced by in-situ chlorination in a tantalum crucible. In the LANL process, 90 percent of the americium and 10 percent of the plutonium are transferred

from the feed metal to the salt. After cooling, the salt and metal are mechanically separated. The salts are transferred to the salt stripping process under P/S code SS.

In the late 1980s, several chloride salt systems were studied, including lithium chloride (LiCl), potassium chloride (KCl), calcium chloride ($CaCl_2$), and $NaCl/CaCl_2$.

3.~~4~~5.4 Electrorefining (currently part of P/S code SS, historically P/S code ER)

The ER process was introduced in 1962 at TA-21 and was moved to TA-55 in 1979. This process takes impure metal from the MSE and MCDOR (DOR) processes and produces high purity plutonium metal (PYRO-2, PYRO-3, PYRO-4, PYRO-6, PYRO-17 [all in TWCP-3542], TWCP-2505). Impure plutonium is cast as an anode, which is then placed in a magnesium oxide crucible with a salt mixture, a metal cathode (typically tungsten), and a seeding reagent that is $MgCl_2$ or $PuCl_3$ (TWCP-2505). After the anode and salt melt, current is applied to the system, and plutonium at the anode is oxidized to plutonium ions, which travel to the cathode and are reduced back to the metal state. Impurities in the original plutonium anode that are less electroactive than plutonium (including cadmium, chromium, lead, and silver) remain in the anode, while impurities more electroactive than plutonium (including barium) are left in the molten salt. After cooling, the crucible is broken and the residues are physically separated from the high purity product metal. Anode heels were sent to pyroredox (P/S code RA) from 1984 to 1986. Currently, salts are sent to P/S ~~code CXL~~ (chloride operations) or carbonate oxidation/distillation (section 3.~~4~~5.5).

From 1987 to 1989, secondary solvent ~~metals~~ such as cadmium, bismuth, lead, and gallium were added to experimental studies of the electrorefining process (PYRO-15/TWCP-3542). The salts and crucibles from those ER runs may be contaminated with additional cadmium and lead, although those metals should have remained in the anode heels. However, these particular anode heels are retained in the vault at TA-55, with no plans to reprocess them in the near future. Crucible wastes were discarded under P/S code SS. Salts are stored in the vault; very little salt from this process met the DL.

3.~~4~~5.5 Salt Stripping (P/S codes SD and SS)

The MSE and ER salts are further treated by salt stripping, oxygen sparging or carbonate oxidation, and salt distillation (PYRO-7, PYRO-8, PYRO-9, PYRO-10 [all in TWCP-3542], TWCP-2498). The salt stripping process treats the residue by melting and stirring the salt with calcium metal in a magnesium oxide crucible at 850°C (TWCP-2502).

This treatment reduces the plutonium in the salt to metal and allows the metal to coalesce for physical removal and recovery. After cooling, the crucible is broken and the metal physically separated and recycled to the ER process or burned to oxide and sent back through aqueous recovery. The crucible shards are transferred to P/S code CXL, leached in hydrochloric acid, then discarded under CXL. During the salt stripping, the RCRA-regulated metals, except for barium, will be reduced with plutonium into the metal product, so that the salt is essentially free of heavy metals but may still contain barium, although this element is unlikely to be present above RCRA threshold levels.

Oxygen sparging and, since 1996, carbonate oxidation are used to ensure that any plutonium, americium, or metallic sodium or potassium left in the salts are converted to nonpyrophoric oxide forms. The NaCl/KCl salt is either discarded under P/S code SS or distilled for recycle and discarded under P/S codes SS or SD. $CaCl_2$ salts are routed to aqueous chloride processing for further plutonium recovery before being discarded under P/S code CXL.

Vanadium pentoxide (V_2O_5) was used in place of carbonate to convert metals to oxide as part of the salt stripping process for a few months in 1998. V_2O_5 was used in experiments under P/S code SD from early February to early March of 1998 and under P/S code SS from May 27 to June 10 of 1998 (PYRO-27/TWCP-3542). Molybdenum oxide was used for the same purpose during the same period of time.

Salt distillation, begun in 1997, allows the recovery of plutonium oxide from the salt and produces purified salt for reuse (PYRO-23/TWCP-3542, TWCP-2498]). NaCl/KCl salt is distilled at 850°C. Process wastes from the salt distillation are the bottoms from the distillation, which are composed of metal oxides, including any RCRA heavy metals originally present in the salt. These metal oxides are rerouted for plutonium recovery. The purified salts are reused or discarded under P/S code SD or SS. However, at the present time salt distillation is on hold awaiting the installation of a new still (PYRO-18/TWCP-3542). In the meantime, the salts and crucibles from ER and MSE are dissolved in P/S code CXL.

3.~~4~~5.6 Pyroredox (P/S code RA)

The pyroredox operation was used to recover plutonium from spent anode heels in the mid to late 1980s (TWCP-2541). The anode heel was polished with calcium metal to remove surface oxide, then oxidized to plutonium (III) with zinc chloride ($ZnCl_2$) in molten KCl, forming plutonium chloride ($PuCl_3$). Elements more electroactive than zinc

(including barium) were oxidized into the salt phase, and the zinc formed a metal button. Any of the residual RCRA-regulated heavy metals that may have been present in the spent anode heel (barium, cadmium, chromium, lead, and silver), with the exception of barium, would be present in the zinc button. The salt was then mixed with calcium metal in $CaCl_2$ to reduce the plutonium to the metal phase, as well as reducing all elements less electroactive than calcium. The salt phase containing small amounts of the impurity barium was mechanically separated from the metal phase and discarded under P/S code RA. The metal phase containing zinc was placed in the vault or further treated (TWCP-2540), and the plutonium eventually was routed back to ER. In the ER process, the RCRA-regulated metals are concentrated in the anode heel, which then may be treated in the pyroredox process to transfer these RCRA metals to the zinc button, or may be roasted in air to form metal oxides and then be dissolved in nitrate operations. Thus, the zinc button output could contain RCRA-regulated heavy metals (D006, D007, D008, D011) above the toxicity characteristic limits. Salt waste could contain barium (D005) above the limit.

5
3.~~4~~.7 Ingot Casting (P/S code SS)

Metal is melted in an MgO crucible to cast the ingot. If the plutonium content of the crucible is greater than the DL, the crucible goes to CXL for plutonium recovery. If its plutonium content is less than the DL, the crucible is discarded under P/S code SS.

5
3.~~4~~.8 Metal Coalescence (P/S code SS)

Metal coalescence is used for plutonium turnings to coalesce the turnings into a metal button. Calcium metal and $CaCl_2$ are added to a MgO crucible along with the turnings and melted. Turnings may contain Freon from the machining process, but any Freon would be destroyed and volatilized by the high temperatures. Residues ~~are~~ handled in the same manner as MCDOR/DOR residues (section 3.~~4~~.2). Metal coalescence is conducted under P/S code SS. 5

5
3.~~4~~.9 Metal Oxidation (P/S code MO)

Small pieces of metal remaining on furnace or crucible surfaces are collected for conversion to the oxide phase in P/S code MO. These metal pieces are placed in a furnace for the conversion process. The oxide is then transferred to the vault (PYRO-11/TWCP-3542).

3.~~4~~5.10 Neptunium (P/S code Neptunium)

A campaign to work off neptunium residues stored in the vault was undertaken in 1993 (PYRO-21/TWCP-3542). This operation was only active during 1993. Any debris wastes generated from this operation would carry the P/S code Neptunium. SME information indicates that wastes generated under P/S code Neptunium would not contain RCRA-listed constituents nor would they have any RCRA hazardous characteristics (PYRO-21/TWCP-3542).

3.~~4~~5.11 Pickling and Nitrate Holding (P/S code PK)

Pickling (i.e., leaching metal with a strong acid) is typically a head-end operation. However, P/S code PK is included in this report because, after a few furnace runs, plutonium metal begins to accumulate on tools and furnace parts. It then becomes necessary to leach the plutonium from these items. In addition, after calcium metal reduction processes such as the metal preparation line (section 3.4.1), direct oxide reduction (section 3.4.2), and molten salt extraction (section 3.4.3), plutonium metal will have an adherent skin of calcium metal. Hydrochloric acid is used to dissolve Pu from tantalum furnace parts, and nitric acid is used to pickle Pu from other metals. The plutonium-bearing leachate solution is transferred to P/S codes CX or CXL in chloride operations, or to P/S code LR in nitrate operations (PYRO-12/TWCP-3542). P/S code PK has not been active since 1992 and may have been incorporated into P/S code SS at that time (PYRO-28/TWCP-3542). Due to the potential for leaching heavy metals from the items treated, D006 (cadmium), D007 (chromium), D008 (lead), and D011 (silver) are assigned to waste produced from P/S code PK

3.~~4~~5.12 Plutonium Trichloride Preparation (P/S code PTP)

P/S code PTP was an intermediate process used in Pu metal production. Under this code, carbon tetrachloride was used to prepare plutonium trichloride by bubbling a carrier gas through carbon tetrachloride and passing the mixed gas stream through a bed of plutonium oxide at 500°–600°C before being absorbed in a 5–6 molar potassium hydroxide solution. The scrubber solution went in the caustic waste line to the RLWTF at TA-50. The carrier gases were argon, hydrogen chloride gas, and chlorine gas. The carbon tetrachloride was broken down into phosgene, carbon monoxide, and carbon dioxide gases in this process, which was active between January 1987 and June 1989, at which time the process switched to the use of phosgene gas until the process ended in May 1991.

Feed material for P/S code PTP was high purity oxides from the vault or from P/S codes CA and MA. The product plutonium trichloride was sent to P/S code SS to be reduced to metal by the MSE or ER processes.

3.~~5~~6 Material Inputs to the Waste Generation Process

Attachment 4 lists P/S codes for pyrochemical processes at TA-55, including process descriptions, feed material, other process inputs, process outputs, and type of waste. The feed materials for pyrochemical processes consist of the general types of materials listed in Table 1 that are obtained either from the storage vault, as process output from other P/S codes, or from sources outside TA-55, including other DOE sites.

The remainder of this section summarizes the nature of the process waste in terms of its physical, chemical and radioisotopic characteristics.

3.~~5~~6.1 Physical Waste Form Identification

Solid waste from pyrochemical processes primarily consists of spent salts, magnesium oxide crucibles, and debris waste. Debris waste contains glassware, plastics, ceramic materials, paper, rags, high-efficiency particulate air (HEPA) filters, metal containers, and small tools. Asbestos and leaded gloves may also be generated as process waste. Prior to 1987, leaded gloves were discarded in the combustible and non-combustible debris waste streams. Between 1987 and May 1992, leaded gloves were segregated from combustible debris and discarded in the metal debris waste stream because of concern that explosive lead oxides might form if the combustible debris waste was incinerated. Since May 1992, leaded gloves have been routinely segregated from other metal debris waste and assigned to a separate leaded-glove waste stream.

insert t

insert g

Because items from several different processes are usually combined into individual waste drums, the physical waste form of each drum must be determined independently. This information is documented on a Waste Origination and Disposition Form (WODF) by the waste generator according to controlled procedures. The P/S code for each waste item is also documented on this form. In the packaging process, a standard form, the Discardable Waste Log Sheet (DWLS), was used to list each item identifier code and record its matrix material. This form was signed by the waste packager, reviewed, and approved by quality assurance (QA) personnel. Example forms for one drum of waste generated by pyrochemical processes can be viewed in record TWCP-2513.

3.~~5~~.2 Radionuclide Content Identification

The primary plutonium material type inputs for plutonium feed materials at Building PF-4 are listed in Table 2. The designation *material type* (MT) (e.g., MT 52) is used within the DOE Complex to describe the isotopic composition of common blends of radioactive materials used within the Complex. The material type notation was developed because it is a convenient way to describe material types that have very consistent isotopic compositions. Table 2 indicates the isotopic composition of the material types at the time the waste was characterized. The material type provides the basis for estimating an upper bound for U-234, U-235, and Am-241 contents based on the rate of decay of their precursors, Pu-238, Pu-239 and Pu-241, respectively. ~~Continue ¶ same ¶ from next page~~ Start new ¶

The purpose of such bounding calculations is to provide a basis for identifying significant enrichment or depletion of one radionuclide versus another, based on radio assays of individual waste containers.

Table 2. Average Isotopic Content of Plutonium Material Types and Enrichments

Material Type (MT)	Plutonium Isotope Weight (%) and Half-Life						Upper Bounds for Dimensionless Weight Ratios[a]		
	Pu-238 (87.74 yr)	Pu-239 (24120 yr)	Pu-240 (6564 yr)	Pu-241 (14.35 yr)	Pu-242 (376,300 yr)	Pu-244 (8.26 x 10^7 yr)	U-234/ Total Pu	U-235/ Total Pu	Am-241/ Total Pu
MT 51	0.006	96.77	3.13	0.076	0.018	—	1×10^{-5}	0.001	0.0006
MT 52	0.01	93.78	6	0.2	0.02	—	2×10^{-5}	0.001	0.002
MT 53	0.03	91.08	8.45	0.366	0.071	—	7×10^{-5}	0.0009	0.003
MT 54	0.046	87.42	11.5	0.81	0.22	—	0.0001	0.0009	0.007
MT 55	0.06	83.88	14.73	1.03	0.304	—	0.0002	0.0009	0.009
MT 56	0.061	81.9	16.51	1.18	0.355	—	0.0002	0.0009	0.01
MT 57	0.433	74.63	20.7	2.55	1.69	—	0.001	0.0008	0.02
MT 42									
84%	1.02	1.37	10.32	3.13	84.14	0.02	0.003	1×10^{-5}	0.03
90%	0.72	1.26	6.4	1.86	89.77	—	0.002	1×10^{-5}	0.02
95%	0.45	0.56	2.47	0.906	95.58	0.029	0.001	6×10^{-6}	0.008
MT 83									
83%	83.89	13.8	1.9	0.32	0.09	—	0.26	0.0002	0.003
89%	89.26	10.07	0.633	0.021	0.015	—	0.28	0.0001	0.0002

Superscript (a) These ratios are calculated under the assumption that no chemical fractionation occurs and, hence, are intended to be used to identify fractionation when it is present by comparing these upper bounds to radioassay data.

Source: TWCP-698

Same ¶

The results of these bounding calculations are ~~also~~ listed tabulated in Table 2, assuming (a) none of these isotopes were initially present in the material, (b) the oldest plutonium material in inventory dates back to 1 January 1960, and (c) the waste was packaged on 1 January 1996, making it 36 years old (TWCP-698).

The material type used in the process generating each waste item was documented on the WODF and DWLS. However, some of the plutonium recovery processes separate plutonium and americium, or plutonium and uranium, so that their relative ratios may be altered in the process outputs and wastes. Waste items may be either depleted or enriched in americium or uranium depending on whether the source of contamination is the process product or the process residues (TWCP-882).

Residues submitted for reprocessing often contain Np-237, the decay product of Am-241 (half-life, 458 yr). This radioisotope is expected to be present in minor amounts in nearly all debris waste from pyrochemical processes at TA-55, and may be enriched in some cases, such as in MSE process waste from P/S code SS from 1992 to the present (TWCP-882). Am-241, Am-243, and Np-237 are present as secondary radionuclides in process waste from P/S code SS from 1984 to 1990 (TWCP-882). Np-237 is expected to be the dominant radionuclide in waste from P/S code Neptunium.

In general, uranium and its isotopes are expected to be present only at trace levels, if at all. U-238 would only be present if purposefully added to the feed material. U-235 ingrowth from the decay of plutonium-239 (half-life, 24,120 years) would be negligible due to the long half-life of Pu-239. U-234 would be present in MT 83 as a decay product of Pu-238 (half-life, 87.74 years). After 20 years, 14.6 percent of the initial Pu-238 would have decayed to U-234. For MT 83 with an initial content of 83.89 percent Pu-238, the atomic ratio U-234 to total plutonium would be about 0.14. ~~No U-236 is present.~~ Pa-231 and Cs-137 may be present in trace amounts because of their widespread presence as contaminants in TA-55 operations (TWCP-5164, TWCP-5165).

During TWCP characterization, the contents of each waste package undergo non-destructive analysis to provide detailed radioisotopic data. These data will be used to evaluate the accuracy of AK information in accordance with *Waste Characterization Data Reconciliation with Acceptable Knowledge* (TWCP-DTP-1.2-064). If warranted, this AK report will be updated to incorporate the results of these comparisons.

3.~~5~~6.3 Chemical Content Identification

Chemical inputs to pyrochemical processes are listed in Table 3. The use of strong acids, bases, or oxidizers does not result in RCRA listings for

solid wastes from these processes because of the absence of free liquids in this waste. However, D006, D008, D009, D019 and P120 codes apply to some of the pyrochemical process wastes, as noted in Table 3.

4.0 ASSIGNMENT OF EPA HAZARDOUS WASTE NUMBERS

The assignment of EPA hazardous waste numbers (HWNs) to process wastes from pyrochemical operations is summarized below, as well as on the process timelines in Attachment 3, and the table of process inputs and outputs in Attachment 4. These assignments take into account the possible presence of RCRA chemicals in process waste as a result of their suspected or known presence in feed materials, chemical inputs, equipment, and glovebox surfaces.

4.1 F, K, and P Listings

P120 (vanadium pentoxide) applies to waste generated under P/S code SD from February to March 1998, and under P/S code SS from May 27, 1998 to June 10, 1998.

No F or K codes apply to solid wastes generated by pyrochemical processes. Although used for cleaning metal parts, Freon would not be present in the waste because the parts were air-dried. Carbon tetrachloride was used as a chlorination reagent, and not as a solvent. No K-listed chemicals were present in the feed materials, chemicals or equipment used in these processes.

4.2 Toxicity Listings

No D001 (ignitable), D002 (corrosive), or D003 (reactive) listings apply to solid wastes from pyrochemical processes because no ignitable chemicals were used in these processes and because the solid wastes do not contain any free liquids (see Section 5.0).

D005 (barium) applies to salt waste generated under P/S code RA.

D006 (cadmium), D007 (chromium), D008 (lead), and D011 (silver) are assigned to the zinc metal waste produced from P/S code RA. In the ER process, these RCRA-regulated heavy metals concentrate in the anode heel, which then may be treated in the pyroredox process (P/S code RA) to transfer them to the zinc button, or may be roasted in air to form metal oxides and then be dissolved in nitrate operations. Thus, only the zinc button output could contain RCRA-regulated metals above the toxicity characteristic limits.

D006 (cadmium), D007 (chromium), D008 (lead), and D011 (silver) are assigned to waste produced from P/S code PK.

D006 (cadmium) and D008 (lead) apply to waste from P/S codes ER and SS due to their use as secondary solvent metals.

D008 (lead) is assigned to metal waste debris from all P/S codes in pyrochemical processes due to the disposal of leaded gloves. Prior to May 1992, leaded gloves were disposed as metal debris without otherwise being segregated. Since May 1992, however, these gloves have been routinely segregated from other metal debris although they are still discarded under the originating P/S code (TWCP-4166).

D009 (mercury) is assigned to wastes generated under P/S code SSMD during the summer of 1994, when a week-long set of experiments contacted small amounts of plutonium with mercury (under 10 grams) (PYRO-22/TWCP-3542). At the end of these experiments, the mercury was solidified to allow disposal.

D019 (carbon tetrachloride): Until sample analyses become available, debris waste items from P/S code PTP (1986 to early 1988) are conservatively assigned D019 although the carbon tetrachloride was probably destroyed in the process.

4.3 Corrosivity, Reactivity, and Ignitability

See Section 6.0.

5.0 DETERMINATION OF THE RADIONUCLIDE ISOTOPIC COMPOSITION

See Section 3.5.2.

5 ~~6~~.0 VERIFICATION THAT IGNITABLE, REACTIVE, AND CORROSIVE WASTES WERE EXCLUDED

According to the WIPP WAP, "The prohibition of liquids and containerized gases prevents the shipment of corrosive, ignitable, or reactive wastes." Administrative controls on waste packaging were in place at various times to ensure the absence of such items from the waste stream.

- Liquids were prohibited from solid waste streams at TA-55 when the facility opened in January 1978. A waste management procedure written to cover operations at the new facility, *TA-55 Standard Operating Procedure (SOP) 406-GEN-R00*, stated that "Liquids are not permitted in any container of solid waste materials" (TWCP-3943).

- Chemical Waste Disposal Requests introduced in June 1980 included checkboxes which the waste generator was required to check if the waste contained corrosive acids or bases, or pyrophoric, flammable, corrosive, explosive, toxic, carcinogenic or highly reactive materials.

- The Certification Plan (TWCP-697) and related Generator Attachments (TWCP-701) were implemented in 1987. Waste generators were required to sign a statement on the WODF documenting that the waste contained "no free liquids, pyrophorics, explosives, compressed gases, powders or materials other than the indicated matrix." Checkboxes were also present for indicating the presence or absence of corrosive chemicals. Full implementation of this generator statement occurred in May 1987.

- Waste management inspectors perform visual examination of the waste prior to its initial packaging, thus allowing the inspectors to verify the generator's WODF statement (TWCP-701, Sections 3.8.5 to 3.8.6).

Stet, except add (TWCP-4720) at end

- In addition to the above-mentioned prohibitions on explosives in wastes, explosives were prohibited from TA-55 until installation of the Impact Test Facility in the early 1990s. ~~Explosives continue to be banned in the solid waste streams up to the present time. If a misfire should occur, the requirement is to destroy the unspent powder by burning.~~ (TWCP-

~~In case of a misfire or unconsumed explosives, a procedure is in place at TA-55 to ensure that explosives do not enter the waste stream (TWCP-4720).~~

- The Waste Profile Request Form (WPRF), which has been in use at LANL since 1991, includes a statement which must be authenticated by the waste generator, that the waste is not ignitable (flash point >200°F), reactive, or corrosive.

- The TA-55 Generator Attachments to the Certification Plan were updated in 1995 (TWCP-700) but the prohibition on liquids in the waste, and the waste management inspection, remained in effect.

Hence, since the inception of operations at TA-55, corrosive and reactive wastes have been excluded from TA-55 solid wastes through the prohibition of liquids. Corroborative data are provided by screening tests on similar pyrochemical salts and residues (which contain higher amounts of plutonium) at the Rocky Flats Environmental Technology Site (TWCP-2501, page WF-34-10). These tests yielded liquid with pH greater than 3, so the wastes cannot be considered corrosive, and demonstrated that the liquid does not corrode steel at a rate greater than 0.25 inch per year.

The absence of these prohibited items is verified through radiography of each waste container and visual examination of selected containers during TWCP characterization activities. These data will be used to assess the accuracy of AK information in accordance with *Reconciliation of Visual Examination and Radiography Information* (TWCP-QP-1.1-028). Any free liquids are remediated, or the container is tagged as non-compliant by filing a Prohibited Waste Report in accordance with *Nonconformance Reporting and Tracking* (TWCP-QP-1.1-007).

6 ~~7~~.0 VERIFICATION THAT INCOMPATIBLE CHEMICALS WERE PROHIBITED

Section 5 ~~6~~.0 summarizes administrative controls in place at TA-55 that prohibit incompatible chemicals in the waste, and measures taken to verify their absence. In

addition, all waste containers shipped from TA-55 to TA-54 for storage were evaluated for potentially incompatible chemicals in accordance with 49 *Code of Federal Regulations* (CFR) Subpart C—Segregation and separation chart of hazardous materials; Section 177.848, Segregation of hazardous materials, and were determined to be in compliance with this requirement.

7 ~~8~~.0 VERIFICATION THAT THERE ARE NO COMPRESSED GASES, FREE LIQUIDS, NONRADIONUCLIDE PYROPHORICS, SEALED CONTAINERS GREATER THAN FOUR LITERS IN VOLUME, OR >1% RADIONUCLIDE PYROPHORICS

Most gases used at the TA-55 Plutonium Facility are stored outside the building and the gas is plumbed into the glovebox from outside the building (TWCP-4164). Occasionally, a lecture bottle may have been used for a process inside the building, but these bottles were kept outside of the glovebox with the gas plumbed into the glovebox. Consequently, compressed gas cylinders or containers are not expected to be in any of the TRU wastes generated by TA-55 operations.

Spray cans, especially WD-40, were in common use in TA-55 gloveboxes until May 1992 (TWCP-4166). These were routinely discarded as metal debris waste. From 1988 until May 1992, the protocol was to vent or puncture the spray cans inside the glovebox; venting was indicated by inserting a metal wire into the valve. After May 1992, spray cans were no longer used in gloveboxes.

For items of pyrochemical salt waste, the procedures of oxygen sparging and/or carbonate oxidation have been used since May 1987 to ensure that pyrophorics were oxidized. In addition, screening tests on similar pyrochemical salts and residues (which contain higher amounts of plutonium) at the Rocky Flats Environmental Technology Site (TWCP-2501) have shown (1) no autoignition, (2) no spontaneous combustion, (3) and no sparking. Experimental results on the reactivity of LANL DOR salt with water and the reactivity in air of heated calcium metal nodules from DOR salts indicate the absence of "dangerous when wet materials" and pyrophoricity in these salts (TWCP-3730, TWCP-3731, TWCP-3732).

Verification that individual waste drums do not contain compressed gases, free liquids, or sealed containers greater than 4 L in volume is obtained from radiography of each waste containers and visual examination of selected containers during TWCP characterization activities. Any free liquids are remediated, and any sealed containers greater than 4 L in volume, or unpunctured or unvented gas containers, are removed; or else the waste container is tagged as non-compliant by filing a Prohibited Waste Report in accordance with *Nonconformance Reporting and Tracking* (TWCP-QP-1.1-007). For administrative controls on the prohibition of pyrophorics, see Sections ~~9~~.0 and ~~7~~.0.
5 6

8 ~~9~~.0 VERIFICATION THAT THERE ARE NO POLYCHLORINATED BIPHENYLS (PCBs) IN THE WASTE STREAM

No PCBs were introduced into the pyrochemical processes, based on documentation in TA-55 procedures reviewed during the AK investigation and summarized in the process inputs listed in Table 1, Table 3, and Attachment 4. Oils used in the reviewed processes include vacuum pump oils, and cutting fluids used for cooling purposes; none of these oils are known to contain PCBs. Any organic compounds present in the process materials would be destroyed or vaporized by the high temperatures of the pyrochemical processes that dominate pyrochemical processing. All transformers known to contain PCBs have been tracked from the time of startup of TA-55 in 1978. Whenever any transformer oil is drained, it is handled by a subcontractor who is wholly responsible for its disposal (TWCP-AK-2.1-005,R.~~1~~2, Section ~~9~~ 8.0). This oil does not enter the LANL disposal operations.

9 ~~10~~.0 CITED PROCEDURES AND REQUIREMENTS DOCUMENTS

- 40 CFR Part 261, Subpart C—Characteristics of hazardous waste, Sections 261.21 (*Characteristic of ignitability*), 261.22 (*Characteristic of corrosivity*), 261.23 (*Characteristic of reactivity*), and 261.24 (*Toxicity characteristic*)
- 40 CFR Part 261, Subpart D—Lists of hazardous waste, Sections 261.31 *(Hazardous wastes from non-specific sources),* 261.32 *(Hazardous wastes from specific sources),* and 261.33 *(Discarded commercial chemical products, off-specification species, container residues, and spill residues thereof)*
- 49 CFR Subpart C—Segregation and separation chart of hazardous materials. Section 177.848, *Segregation of hazardous materials*
- *Acceptable Knowledge Documentation* (TWCP-QP-1.1-021,R.5)
- *Nonconformance Reporting and Tracking* (TWCP-QP-1.1-007)
- *Reconciliation of Visual Examination and Radiography Information* (TWCP-QP-1.1-028)
- *Waste Acceptance Criteria for the Waste Isolation Pilot Plant* (DOE/WIPP-069)
- *Waste Analysis at Facilities that Generate, Treat, Store and Dispose of Hazardous Waste* (EPA/OSWER 9938.4-03)
- Waste Analysis Plan (Attachment B) to the *Hazardous Waste Facility Permit Issued to the Waste Isolation Pilot Plant* (EPA No. NM4890139088)
- *Waste Characterization Data Reconciliation with Acceptable Knowledge* (TWCP-DTP-1.2-064)

TWCP Record No.	Information Category Code*	Information	Source	Summary	Limitations
TWCP-3943	D	Procedure for Waste Management at TA-55	TA-55 Document, 406-GEN-R00	Contains information on waste management procedures in 1978	None, but doesn't address today's waste management concerns
TWCP-4162	D	Answers to questions about P/S codes PB, PuBe, CC, MB, MS, FF, BF, and other issues	Interview with Jim Foxx, 10/12/00	Answers to questions on use of asbestos at TA-55, non-defense activities, and specific P/S codes in chloride operations.	None
TWCP-4164	D	Answers to questions about various P/S codes	Interview with Jim Foxx, 10/16/00	Answers to questions on use of silver, disposal of ash and resins, and use of gases.	None
TWCP-4166	D	Answers to questions about P/S codes DO, EV, HP, CF, OR, RM, PY	Interview with Jim Foxx, 10/17/00	Answers to questions on use of chromium and silver, RCRA metals in cement, asbestos in furnaces and gloves, and disposal of spray cans used in gloveboxes.	None
TWCP-4167	D	Answers to questions about segregation of non-defense wastes; leachability of silver from ash	Interview with Jim Foxx, 10/18/00	Segregation of non-defense wastes began on 27 August 1998; analytical data show that silver in ash is below limits of regulatory concern	None
TWCP-AK-2.1-002,R.2	A	*Process Acceptable Knowledge Summary Report for Chloride Operations at TA-55*	Generators interview and TWCP AK references	Detailed information on each P/S code for chloride operations at TA-55	None
TWCP-AK-2.1-003,R.2	A	*Process Acceptable Knowledge Summary Report for Metal Operations at TA-55*	Generators interview and TWCP AK references	Detailed information on each P/S code for metal operations at TA-55	None
TWCP-AK-2.1-004,R.2	A	*Process Acceptable Knowledge Summary Report for Miscellaneous Operations at TA-55*	Generators interview and TWCP AK references	Detailed information on each P/S code for miscellaneous operations at TA-55	None

Insert TWCP-4720, 5164, 5165 → (Copy from TWCP-AK-2.1-008, R.2 AK Roadmap)

* Information Category Codes: A = forms intended for use in waste certification, B = data from controlled databases and published documents, C = unpublished data, and D = interviews, memos, and letters

MAVIS

TA-55 PLUTONIUM FACILITY
ACCEPTABLE KNOWLEDGE REPORT

REPORT TITLE: Process Acceptable Knowledge Summary Report for Pyrochemical Processes at TA-55

REPORT NUMBER: TWCP-AK-2.1-006,R.2 (LA-UR-01-)

WASTE GENERATED FROM PROCESS/STATUS CODES: CRD, ER, MO, MP, Neptunium, OR, PK, PTP, RA, SCB, SD, SS, and SSMD

EFFECTIVE DATE: _____

NEXT REVIEW DATE: _____

DOCUMENT PREPARER:

_____ _____
NAME DATE

APPROVALS:

_____ _____
INDEPENDENT TECHNICAL REVIEWER/EDITOR DATE

_____ _____
SITE PROJECT MANAGER DATE

_____ _____
WASTE CERTIFICATION OFFICIAL DATE

_____ _____
SITE PROJECT QA OFFICER DATE

_____ _____
FACILITY REPRESENTATIVE DATE

© 2000, 2001 University of California

HISTORY OF REVISIONS

Revision No.	Date	Pages Revised	Reason for Change
0	07/13/00	—	New report (TWCP-03939)
1	12/04/00	All	Make report a controlled document and respond to CAR-00-036
2		All	Respond to CBFO comments and update to include new AK information

group, waste matrix code, and potential for the presence of hazardous constituents. In the Sampling Plan, TA-55 wastes have been assigned to waste streams based on the waste segregation schemes used by TA-55:

- ~~First~~ By radioisotope content (Pu-238 or Pu-239 material type)
- ~~Then~~ By material matrix (combustible, noncombustible, metal, glass, etc. waste types)
- ~~Then~~ By hazardous waste status (mixed, non-mixed, or special case waste streams)

3.3 Waste Physical Form and Content Description

Wastes generated during pyrochemical operations contain a variety of pyrochemical chloride salts as well as mixtures of calcium fluoride and calcium oxide salts, that were generated as byproducts of the operations and that met the discard limit for plutonium content. Debris wastes and caustic liquid wastes sent to the Radioactive Liquid Waste Treatment Facility (RLWTF) at TA-50 are also covered by this process AK report. General debris waste categories from pyrochemical processes include

- Cellulose-based waste (for example, paper, cloth)
- Plastic-based waste (for example, gloves, tape, labware)
- Rubber
- Magnesium oxide crucibles
- Metal debris (for example, tantalum crucibles, wire, hose clamps, tools, labware)
- Glass debris

These debris items are contaminated with small amounts of radioactive and chemical substances from pyrochemical processes.

3.4 Waste Volume and Time Period of Generation

This report covers waste streams generated from 1979, when pyrochemical processes first began in Building PF-4, to the present. Wastes from the pyrochemical processes have different associated EPA hazardous waste numbers (HWNs) depending on the time period during which they were generated. The P/S codes, their time period of generation, and corresponding RCRA codes are shown graphically in Attachment 3, Timeline for Pyrochemical Processes.

3.0 DESCRIPTION OF THE PROCESS WASTE

The following sections describe processes used in pyrochemical processes, and identify the resulting wastes as well as outputs that are sent to other operations, such as nitrate operations, for further processing.

3.1 Facility and Mission

The TA-55 Plutonium Facility (Building PF-4) recovers plutonium from scrap and residues generated throughout the U.S. Department of Energy (DOE) defense complex, and processes it into pure plutonium oxide for conversion to metal and other products. A LANL site map and a detailed map of the buildings at TA-55, including Building PF-4, are shown in Attachment 2.

Processes in pyrochemical operations were solely defense related (TWCP-614, TWCP-4162). However, wastes from various processes were not segregated by funding source, waste-generating process, or waste-generating location (e.g., room or glovebox) until recently (August 27, 1998), but rather were segregated and packaged based on waste type (TWCP-887, TWCP-4162, TWCP-4167). Consequently, a single waste container often contains wastes from multiple processes. Some debris waste was also co-mingled with room trash related to these same operations (both defense and non-defense), and was initially boxed as low-level waste. Subsequently, some of these waste boxes were returned for disposal in drums as TRU waste when on-site radioassay results showed them exceeding the low-level discard limits (TWCP-816).

3.2 Basis, Rationale, and Assumptions Used to Delineate the Waste Stream(s)

The basis for delineation of TA-55 waste streams was established by the evolving set of LANL and TA-55 waste management plans and site-specific procedures, which date back to the start of operations at the Plutonium Facility in 1978 (TWCP-352, TWCP-697, TWCP-700, TWCP-701, TWCP-3943). The stated guidance and practice from the beginning, continuing to the present day, has been to handle and package all debris waste in a similar fashion, regardless of the process (i.e., P/S code) of origin. Inspection, collection, documentation and packaging operations of solid, certifiable TRU wastes at TA-55 are conducted in PF-4 by a waste management section or team (TWCP-352, TWCP-700, TWCP-701, TWCP-3943). Wastes from all TRU waste-generating activities at TA-55 are handled and packaged into waste containers by this team based on the material content of the waste, without regard to P/S code. Materials are considered waste only when they have been received and processed by the waste management team.

Assignment of a particular waste container to a waste stream is then made on the basis of waste generator information compiled in the Sampling Plan. Waste generator information is reviewed to identify the types and sources of waste items present in each drum, in order to evaluate the most appropriate waste summary

Several research and development (R&D) processes also took place in pyrochemical operations:

- Chlorination/Reduction R&D (P/S code CRD),
- Chlorination Ca/Al Scrubbing R&D (P/S code SCB) (PYRO-24/ TWCP-3542), and
- Salt Stripping Materials Development (P/S code SSMD) (PYRO-22/TWCP-3542).

Each of these processes is described below. A complete listing of P/S codes for pyrochemical processes, their descriptions, feed materials, and inputs and outputs is found in Attachment 4. A simplified process flow diagram for pyrochemical processes is found in Attachment 5.

3.5.1 Metal Preparation Line (P/S code MP)

PuF_4

The MPL (conducted under P/S code MP) produced plutonium metal from the ~~tetrafluoride salt~~ until 1992 (TWCP-352). Plutonium oxides derived from the calcination of oxalate or peroxide precipitates (in nitrate operations) were reacted with hydrogen fluoride gas to form plutonium tetrafluoride. Because the plutonium oxide feed material had been purified in previous aqueous processes, it contained less than trace amounts of RCRA-regulated metal impurities. Input material came from the vault or P/S codes RB or RBJ (in nitrate operations). In the metal production process, plutonium oxide was converted to plutonium tetrafluoride, which in turn was reacted at high temperature (600 °C to 2000 °C) with metallic calcium in a magnesium oxide crucible. Iodine was added as a reaction initiator. The desired product was plutonium metal, which was recovered as a button by breaking the crucible and mechanically separating the contents. The metal was transferred to P/S codes SS or CA or sent to the vault.

The waste products were calcium fluoride (CaF_2) and calcium iodide (CaI_2), which formed a slag, magnesium oxide sand, and magnesium oxide crucible pieces. These were discarded under P/S code MP if the plutonium content was below the discard limit (DL). If the plutonium content was above the DL, the slag and crucible pieces were sent to nitrate operations (*Process Acceptable Knowledge Summary Report for Nitrate Operations at TA-55* [TWCP-AK-2.1-005]) to be dissolved in nitric acid (HNO_3) and aluminum oxide (Al_2O_3). The leached materials were then discarded under P/S codes ED or SC, with the waste described as leached solids. The leachate was also treated in nitrate operations under P/S code DS to recover the plutonium. The magnesium oxide sand was reused if possible.

Waste volumes for each P/S code have not been tracked. Instead, waste items are segregated into similar material types and packaged in waste containers. Waste containers are assigned to waste streams in the Sampling Plan, and waste stream volumes are reported in that document.

3.5 Waste Generation Processes

The following subsections describe the generation of waste by pyrochemical processes, as well as product and waste outputs to other processes or operations.

Manufacturing and research operations performed at TA-55 results in the production of plutonium-contaminated scrap and residues. These residues are processed to recover as much plutonium as is practical (TWCP-352). TA-55 has extensive capabilities for the extraction and recovery of plutonium from residues and scraps generated from operations at various LANL facilities. The metal production and purification operations as well as associated maintenance operations are the sources of most TRU waste generated from pyrochemical processing. Detailed background information about the TA-55 plutonium recovery processes can be found in *Waste from Plutonium Conversion and Scrap Recovery Operations* (TWCP-352 and TWCP-886).

This report focuses on metal preparation and purification processes (pyrochemical processes). Pyrochemical operations for plutonium include the following processes:

- metal preparation line (MPL) (P/S code MP),
- single-pass direct oxide reduction (DOR) and multiple-cycle direct oxide reduction (MCDOR) with in-situ regeneration (P/S code OR),
- electrorefining (ER) (initially P/S code ER; but now part of P/S code SS),
- molten salt extraction (MSE) (P/S code SS),
- salt stripping (salt stripping, salt distillation, carbonate oxidation, and oxygen sparging) (P/S code SS),
- pyroredox (P/S code RA),
- pickling (P/S code PK) and metal oxidation (P/S code MO).

NOTE: In contrast with most P/S codes, P/S code SS has grown over the years to encompass several activities that are different steps in the metal refining process, rather than representing a single distinct operation. As such, discussion of this P/S code is covered under more than one subsection.

Little or no purification of the plutonium occurred during this process. However, because the reagents introduced no impurities and the highest purity feed material was used, the resulting metal was often satisfactory for high-purity applications. In this process, any trace metals were below the toxicity characteristic levels, so that the associated debris and slag wastes were below the toxicity characteristic levels in RCRA metal content (TWCP-2502).

3.5.2 DOR and MCDOR (P/S codes OR and SCB)

Prior to the multiple-cycle DOR process, a single pass DOR process was used for plutonium oxide (TWCP-2507, PYRO-14/TWCP-3542). Plutonium oxide and calcium metal are reacted in molten calcium chloride ($CaCl_2$) or $CaCl_2$ mixed with calcium fluoride (CaF_2), to produce plutonium metal. The reaction is conducted in a magnesium oxide (MgO) crucible at 820°C to 875°C. Any arsenic, mercury or selenium present in the impure plutonium oxide would be driven off due to their volatility at this high temperature (TWCP-1258). The reaction proceeds to completion when excess calcium is present and when sufficient $CaCl_2$ is available to dissolve the calcium oxide (CaO) product.

After cooling, a plutonium metal button is removed by breaking the crucible. A layer of salt above the button contains unreacted oxide and metal shot, which was sometimes recovered by addition of fresh salt plus additional calcium metal. The process was then rerun. If the unreacted oxide and metal shot did not process after the second run, the material was sent to aqueous recovery. The product plutonium metal contains significant impurities, including additional metal impurities derived from the calcium metal and calcium chloride reagents. It must be further purified by ER. All DOR salts were oxygen sparged, which would have oxidized any pyrophoric metals that might have been present. The salt is then either routed through aqueous chloride operations to recover the plutonium, or else discarded as waste along with the remaining calcium metal and MgO crucible pieces. After May 1987, spent salts above the DL were sent to controlled oxidation to oxidize the pyrophoric metals.

The feed oxide, reagent salts and reductant are of the highest purity available because the process is non-purifying. In fact, the plutonium metal produced from this operation is always less pure than the feed material due to impurities derived from the reductant~~reagents~~. Plutonium metal from this process typically requires further processing to meet purity requirements.

To minimize the salt waste, the MCDOR process was started in 1988 (TWCP-2502, PYRO-16/TWCP-3542). In this process, the molten salt is regenerated by sparging the $CaCl_2$-CaO mixture with chlorine gas between multiple plutonium metal production runs. After approximately five cycles of metal production, the mixture is cooled and the salt and metal phases are separated. The salt is chlorinated and reused for MCDOR. The salt is discarded under P/S code OR if the plutonium concentration is below the DL. The salts above the DL are returned to P/S code CXL for dissolution and recovery. Before 1987, the salts may have been discarded under P/S code OR or routed to chloride operations. The chlorine off-gas is passed through a caustic scrubber, with the caustic solution going to the RLWTF at TA-50 for disposal if the solution meets this facility's Waste Acceptance Criteria (WAC). If the solution does not meet the WAC, it is returned to P/S code CXL for additional treatment.

Mavis:
What method was used to analyze the metals?
~~June is looking up the answer~~
Stet
(No information in record)
JTM

MCDOR process inputs are low in contaminants. Only high-purity reagent chemical salts are used in the process, and the plutonium oxide feed materials are also of high purity, with absorbed water being the main impurity. MCDOR metal feed material analytical samples were analyzed for cadmium, chromium, lead, and silver. A review of 100 analyses showed that, even in the most impure sample, these D-listed toxicity characteristic metals were well below RCRA regulatory limits (TWCP-2540), as follows:

Metal	Totals Analysis	Calculated TCLP Result	Regulatory Level
Cadmium	<10 ppm	<0.5 mg/L	1 mg/L
Chromium	30 ppm	1.5 mg/L	5 mg/L
Lead	20 ppm	1 mg/L	5 mg/L
Silver	2 ppm	0.1 mg/L	5 mg/L

All metal impurities except barium would be reduced to the metal state and remain with the plutonium metal phase rather than be transferred into the molten salt phase. Hence, the molten salt phase is purified of regulated metals except for barium. These regulated metals will be present in the waste salt at levels below the toxicity characteristic levels. Because the salts are reused, only the initial reduction in fresh salt would contain any of the salt feed impurities.

The waste salt, crucibles, and debris waste items associated with this process are discarded under P/S codes OR or CXL. Asbestos gloves

were also used in glovebox operations under P/S code OR, and were disposed as part of ceramic and glass debris wastes.

P/S code SCB was an R&D effort examining the feasibility of this process at extracting Pu (MT 52) from salt before discarding the salt. Pu was chlorinated then reduced to the metal with calcium metal (similar to DOR).

3.5.3 Molten Salt Extraction (P/S code SS)

MSE is used to separate americium and the more reactive elements such as rare earth elements, alkali metals, and alkaline earth metals from plutonium metal (PYRO-4/TWCP-3542, TWCP-352). This process is employed only if the americium content is greater than 1000 ppm (TWCP-2506). In the original process, which operated from 1979 to 1988, magnesium chloride ($MgCl_2$) was added to the impure plutonium metal in a molten salt of sodium chloride (NaCl) and potassium chloride (KCl), contained in a MgO crucible and heated to 750°C. The magnesium chloride oxidized americium to $AmCl_3$, although some plutonium was also converted to the chloride salt form. In 1988, the MSE process was converted to use plutonium chloride ($PuCl_3$) produced by in-situ chlorination in a tantalum crucible. In the LANL process, 90 percent of the americium and 10 percent of the plutonium are transferred from the feed metal to the salt. After cooling, the salt and metal are mechanically separated. The salts are transferred to the salt stripping process under P/S code SS.

In the late 1980s, several chloride salt systems were studied, including lithium chloride (LiCl), potassium chloride (KCl), calcium chloride ($CaCl_2$), and NaCl/$CaCl_2$.

3.5.4 Electrorefining (currently part of P/S code SS, historically P/S code ER)

The ER process was introduced in 1962 at TA-21 and was moved to TA-55 in 1979. This process takes impure metal from the MSE and MCDOR (DOR) processes and produces high purity plutonium metal (PYRO-2, PYRO-3, PYRO-4, PYRO-6, PYRO-17 [all in TWCP-3542], TWCP-2505). Impure plutonium is cast as an anode, which is then placed in a magnesium oxide crucible with a salt mixture, a metal cathode (typically tungsten), and a seeding reagent that is $MgCl_2$ or $PuCl_3$ (TWCP-2505). After the anode and salt melt, current is applied to the system, and plutonium at the anode is oxidized to plutonium ions, which travel to the cathode and are reduced back to the metal state. easier to be reduced Impurities in the original plutonium anode that are l~~ess electroactiv~~e than plutonium (including cadmium, chromium, lead, and silver) remain in the anode, while impurities m~~ore electroactiv~~e than plutonium (including easier to be oxidized.

barium) are left in the molten salt. After cooling, the crucible is broken and the residues are physically separated from the high purity product metal. Anode heels were sent to pyroredox (P/S code RA) from 1984 to 1986. Currently, salts are sent to P/S code CXL (chloride operations) or carbonate oxidation/distillation (section 3.5.5).

From 1987 to 1989, secondary solvent metals such as cadmium, bismuth, lead, and gallium were added to experimental studies of the electrorefining process (PYRO-15/TWCP-3542). The salts and crucibles from those ER runs may be contaminated with additional cadmium and lead, although those metals should have remained in the anode heels. However, these particular anode heels are retained in the vault at TA-55, with no plans to reprocess them in the near future. Crucible wastes were discarded under P/S code SS. Salts are stored in the vault; very little salt from this process met the DL.

3.5.5 Salt Stripping (P/S codes SD and SS)

The MSE and ER salts are further treated by salt stripping, oxygen sparging or carbonate oxidation, and salt distillation (PYRO-7, PYRO-8, PYRO-9, PYRO-10 [all in TWCP-3542], TWCP-2498). The salt stripping process treats the residue by melting and stirring the salt with calcium metal in a magnesium oxide crucible at 850°C (TWCP-2502). This treatment reduces the plutonium in the salt to metal and allows the metal to coalesce for physical removal and recovery. After cooling, the crucible is broken and the metal physically separated and recycled to the ER process or burned to oxide and sent back through aqueous recovery. The crucible shards are transferred to P/S code CXL, leached in hydrochloric acid, then discarded under CXL. During the salt stripping, the RCRA-regulated metals, except for barium, will be reduced with plutonium into the metal product, so that the salt is essentially free of heavy metals but may still contain barium, although this element is unlikely to be present above RCRA threshold levels.

Mavis: oxidation by long-chain alcohol?

Oxygen sparging and, since 1996, carbonate oxidation are used to ensure that any plutonium, americium, or metallic sodium or potassium left in the salts are converted to nonpyrophoric oxide forms. The NaCl/KCl salt is either discarded under P/S code SS or distilled for recycle and discarded under P/S codes SS or SD. $CaCl_2$ salts are routed to aqueous chloride processing for further plutonium recovery before being discarded under P/S code CXL.

Stet – this is correct per John Musgrave
John

Vanadium pentoxide (V_2O_5) was used in place of carbonate to convert metals to oxide as part of the salt stripping process for a few months in 1998. V_2O_5 was used in experiments under P/S code SD from early

transferred to P/S codes CX or CXL in chloride operations, or to P/S code LR in nitrate operations (PYRO-12/TWCP-3542). P/S code PK has not been active since 1992 and may have been incorporated into P/S code SS at that time (PYRO-28/TWCP-3542). Due to the potential for leaching heavy metals from the items treated, D006 (cadmium), D007 (chromium), D008 (lead), and D011 (silver) are assigned to waste produced from P/S code PK

3.5.12 Plutonium Trichloride Preparation (P/S code PTP)

P/S code PTP was an intermediate process used in Pu metal production. Under this code, carbon tetrachloride was used to prepare plutonium trichloride by bubbling a carrier gas through carbon tetrachloride and passing the mixed gas stream through a bed of plutonium oxide at 500°–600°C before being absorbed in a 5–6 molar potassium hydroxide solution. The scrubber solution went in the caustic waste line to the RLWTF at TA-50. The carrier gases were argon, hydrogen chloride gas, and chlorine gas. The carbon tetrachloride was broken down into phosgene, carbon monoxide, and carbon dioxide gases in this process, which was active between January 1987 and June 1989, at which time the process switched to the use of phosgene gas until the process ended in May 1991. Excess phosgene gas

excess phosphene passed thru water or base? John Musgrave is checking

Feed material for P/S code PTP was high purity oxides from the vault or from P/S codes CA and MA. The product plutonium trichloride was sent to P/S code SS to be reduced to metal by the MSE or ER processes.

3.6 Material Inputs to the Waste Generation Process

Attachment 4 lists P/S codes for pyrochemical processes at TA-55, including process descriptions, feed material, other process inputs, process outputs, and type of waste. The feed materials for pyrochemical processes consist of the general types of materials listed in Table 1 that are obtained either from the storage vault, as process output from other P/S codes, or from sources outside TA-55, including other DOE sites.

The remainder of this section summarizes the nature of the process waste in terms of its physical, chemical and radioisotopic characteristics.

3.6.1 Physical Waste Form Identification

Solid waste from pyrochemical processes primarily consists of spent salts, magnesium oxide crucibles, and debris waste. Debris waste contains glassware, plastics, ceramic materials, paper, rags, high-efficiency particulate air (HEPA) filters, metal containers, and small tools. Asbestos and leaded gloves may also be generated as process

waste. Prior to 1987, leaded gloves were discarded in the combustible and non-combustible debris waste streams. Between 1987 and May 1992, leaded gloves were segregated from combustible debris and discarded in the metal debris waste stream because of concern that explosive lead oxides might form if the combustible debris waste was incinerated. Since May 1992, leaded gloves have been routinely segregated from other metal debris waste and assigned to a separate leaded-glove waste stream.

Because items from several different processes are usually combined into individual waste drums, the physical waste form of each drum must be determined independently. This information is documented on a Waste Origination and Disposition Form (WODF) by the waste generator according to controlled procedures. The P/S code for each waste item is also documented on this form. In the packaging process, a standard form, the Discardable Waste Log Sheet (DWLS), was used to list each item identifier code and record its matrix material. This form was signed by the waste packager, reviewed, and approved by quality assurance (QA) personnel. Example forms for one drum of waste generated by pyrochemical processes can be viewed in record TWCP-2513.

would be destroyed or vaporized by the high temperatures of the pyrochemical processes that dominate pyrochemical processing. All transformers known to contain PCBs have been tracked from the time of startup of TA-55 in 1978. Whenever any transformer oil is drained, it is handled by a subcontractor who is wholly responsible for its disposal (TWCP-AK-2.1-005,R.2, Section 8.0). This oil does not enter the LANL disposal operations.

9.0 [~~9.0~~] CITED PROCEDURES AND REQUIREMENTS DOCUMENTS

- 40 CFR Part 261, Subpart C—Characteristics of hazardous waste, Sections 261.21 (*Characteristic of ignitability*), 261.22 (*Characteristic of corrosivity*), 261.23 (*Characteristic of reactivity*), and 261.24 (*Toxicity characteristic*)
- 40 CFR Part 261, Subpart D—Lists of hazardous waste, Sections 261.31 *(Hazardous wastes from non-specific sources),* 261.32 *(Hazardous wastes from specific sources),* and 261.33 *(Discarded commercial chemical products, off-specification species, container residues, and spill residues thereof)*
- 49 CFR Subpart C—Segregation and separation chart of hazardous materials. Section 177.848, *Segregation of hazardous materials*
- *Acceptable Knowledge Documentation* (TWCP-QP-1.1-021,R.5)
- *Nonconformance Reporting and Tracking* (TWCP-QP-1.1-007)
- *Reconciliation of Visual Examination and Radiography Information* (TWCP-QP-1.1-028)
- *Waste Acceptance Criteria for the Waste Isolation Pilot Plant* (DOE/WIPP-069)
- *Waste Analysis at Facilities that Generate, Treat, Store and Dispose of Hazardous Waste* (EPA/OSWER 9938.4-03)
- Waste Analysis Plan (Attachment B) to the *Hazardous Waste Facility Permit Issued to the Waste Isolation Pilot Plant* (EPA No. NM4890139088)
- *Waste Characterization Data Reconciliation with Acceptable Knowledge* (TWCP-DTP-1.2-064)

ACCEPTABLE KNOWLEDGE ROADMAP

P/S codes: CRD, ER, MO, MP, OR, Neptunium, PK, PTP, RA, SCB, SD, SS, and SSMD.

Copies of these documents are in the TWCP RMDC Center.

TWCP Record No.	Information Category Code*	Information	Source	Summary	Limitations
TWCP-352	B	Description of plutonium recovery processes	*Wastes from Plutonium Conversion and Scrap Recovery Operations,* LA-11069-MS, March 1988.	Document describes the Pu residues and the various treatment approaches used in recovering plutonium from scrap	Document does not give information about RCRA constituents introduced or present in the processes
TWCP-614	D	All TA-55 waste is Defense related.	Memo from Doug Sankey.	All TA-55 waste is Defense related.	Budget information may not be acceptable.
TWCP-697	C	Waste management requirements to meet WIPP WAC requirements were formalized in 1984.	*Los Alamos TRU Waste Certification Plan for Newly Generated TRU Waste,* WCP-HSE7-CPL-01, R.2 (November 1984)	Waste management requirements to meet WIPP WAC requirements. Generator Attachments were used to describe and reference specific generator procedures.	Overview document - Generator Attachments provide more detailed information.
TWCP-698	B	Gives Material Type compositions	NMT Memo, NMT-7 WM/EC-96-032 Benchmark Environmental Corp. Memo, AL-7193 BEC	Gives Material Type compositions	Does not give information on how material may fractionate in TA-55 waste processes.
TWCP-700	C	*Attachment 3 to the Los Alamos TRU Waste Certification Plan for Newly Generated TRU Waste,* R05	*NMT-7 Attachment, January 1995,* TRUWM-TA55-CPA-03,R00	Documents how controls to meet WIPP WAC were implemented and how independent verification was accomplished.	Information is not extremely detailed.
TWCP-701	C	*TA-55 Generator Attachment* to the *TRU Waste Certification Plan for Newly Generated TRU Waste*	*TA-55 Attachment, 1987,* TRU-MST12-CPA-03,R00	Documents how controls to meet WIPP WAC were implemented and how independent verification was accomplished.	Information is not extremely detailed.

* Information Category Codes: A = forms intended for use in waste certification, B = data from controlled databases and published documents, C = unpublished data, and D = interviews, memos, and letters

Attachment 3 - Acceptable Knowledge Source Document Summary

Waste Stream Number(s): LA-CIN01.001, LA-MHD01.001, LA-MIN02-V.001, LA-MIN04-S.001

Site(s): Los Alamos National Laboratory	**Source Document Tracking Number:** D029
Acceptable Knowledge Documentation Type: ✔ TRU Waste Management Program Information ✔ Waste Stream-Specific Information Supporting Information	**Category:** C - Correspondence ✔ D - Documents M - Miscellaneous P - Procedures DR - Discrepancy Resolution U - Unpublished Documents

Title of Source Document: Process Acceptable Knowledge Report for Metal Operation Processes at TA-55

Source Document Reference Information (author(s), document and revision number, date, publisher): John Musgrave, TWCP-AK-2.1-003 (LA-UR-01-2556), 2, 5/17/01

AK # [a]	Source Doc. Page # [b]	AK Information Summary
WS8, WS12	27	See Table 4. Chemical Inputs to Processes ...Section 4.2 Toxicity ListingsD004 applies to P/S code PE, in which arsenic was used in 1984 and perhaps into 1985...
WS7	12, 3	TA-55 extracts and recovers plutonium from residues and scraps generated from operations at various LANL and other DOE sites in the defense complex. This is the source of TRU waste contaminated scrap, residues and debris. The scrap and residues are processed to recover as much plutonium as possible. Waste from metal operations are generated from plutonium recovery and purification for defense and non-defense programs. These wastes were generated and produced in the same rooms and gloveboxes and were not segregated until August 1998.
WS7, WS9	vii	Solid TRU waste from metal operation processes consisted of graphite and debris waste including cellulosic, ceramic, plastic, rubber, metal and glass debris. Typical items were rags, gloves (leaded and non-leaded), small tools, steel storage containers, magnesium oxide crucibles, HEPA filters, paper, cardboard, strain gauges, plastic items, and scrap stainless steel.
WS1, WS3, WS8, WS9, WS10, WS11, WS12	ix	Summary Category Groups: S3000, S5000 Waste Matrix Codes: S3100, S3200s S5100, S5120s, S5300, S5311 an dS5400 Description: The overall defense related goal of the metal operaion process is to cast and machine plutonium metal. Reactor fuel development is also part of metal operation processes. Feed: Plutonium metal or metal alloys and oxides, disassembled weapons components (pits), other actinide metals or metal alloys and oxides, reactor fuel pellets. Dates of Generation: 1979 to 2001 Radioisotpic content: Am-241, Am-243, Co-144, Cm-244, Pa-231, Np-237, Th-232, Th-232 enriched in Th-230, U-233 and depeleted uranium. Am-241, Np-237 and U-234 may be present at detectabel concentrations as decay products. RCRA Codes: D004, D007, D008, D035, D040, F001, F002, F005
WS8, WS11, WS12	22	Table 1 contains the Process Feed Materials for Metal Operations Processes including the potential presence of RCRA-regulated substandes and P/S codes used in metal operations.

ORIGINAL

Attachment 3 - Acceptable Knowledge Source Document Summary (continued)

Site(s): Los Alamos National Laboratory		Source Document Tracking Number: D029
AK # [a]	**Source Doc. Page # [b]**	**AK Information Summary**
WS11	24	Table 2 contains the average isotopic content of plutonium material types and enrichments. Table 3 contains the average isotopic content of uranium material types and enrichments.
PR1	Att 2	Attachment 2 contains maps of LANL and TA-55.
WS3, WS11	Att. 3	Attachment 3 contains a detailed time line for metal operations which is broken down by P/S code and hazardous waste numbers

Source Document Data Limitations (if any):

1. Waste volume was not tracked for the P/S codes.

Acceptable Knowlege Expert:

Amy Johns / Amy Johns Date: 1/14/2009
Print /Sign

[a] Obtain from Acceptable Knowledge Documentation Checklist
[b] For microfilm or microfiche, identify box, tape, reel number and location.

Attachment 3 - Acceptable Knowledge Source Document Summary

Waste Stream Number(s): LA-CIN01.001, LA-MHD01.001, LA-MIN02-V.001

Site(s): Los Alamos National Laboratory	**Source Document Tracking Number:** D029
Acceptable Knowledge Documentation Type: ✔ TRU Waste Management Program Information ✔ Waste Stream-Specific Information Supporting Information	**Category:** C - Correspondence ✔ D - Documents M - Miscellaneous P - Procedures DR - Discrepancy Resolution U - Unpublished Documents

Title of Source Document: Process Acceptable Knowledge Report for Metal Operation Processes at TA-55

Source Document Reference Information (author(s), document and revision number, date, publisher): John Musgrave, TWCP-AK-2.1-003 (LA-UR-01-2556), 2, 5/17/01

AK # [a]	Source Doc. Page # [b]	AK Information Summary
WS8, WS12	27	See Table 4. Chemical Inputs to Processes ...Section 4.2 Toxicity ListingsD004 applies to P/S code PE, in which arsenic was used in 1984 and perhaps into 1985...
WS7	12, 3	TA-55 extracts and recovers plutonium from residues and scraps generated from operations at various LANL and other DOE sites in the defense complex. This is the source of TRU waste contaminated scrap, residues and debris. The scrap and residues are processed to recover as much plutonium as possible. Waste from metal operations are generated from plutonium recovery and purification for defense and non-defense programs. These wastes were generated and produced in the same rooms and gloveboxes and were not segregated until August 1998.
WS7, WS9	vii	Solid TRU waste from metal operation processes consisted of graphite and debris waste including cellulosic, ceramic, plastic, rubber, metal and glass debris. Typical items were rags, gloves (leaded and non-leaded), small tools, steel storage containers, magnesium oxide crucibles, HEPA filters, paper, cardboard, strain gauges, plastic items, and scrap stainless steel.
WS1, WS3, WS8, WS9, WS10, WS11, WS12	ix	Summary Category Groups: S3000, S5000 Waste Matrix Codes: S3100, S3200s S5100, S5120s, S5300, S5311 an dS5400 Description: The overall defense related goal of the metal operaion process is to cast and machine plutonium metal. Reactor fuel development is also part of metal operation processes. Feed: Plutonium metal or metal alloys and oxides, disassembled weapons components (pits), other actinide metals or metal alloys and oxides, reactor fuel pellets. Dates of Generation: 1979 to 2001 Radioisotpic content: Am-241, Am-243, Co-144, Cm-244, Pa-231, Np-237, Th-232, Th-232 enriched in Th-230, U-233 and depeleted uranium. Am-241, Np-237 and U-234 may be present at detectabel concentrations as decay products. RCRA Codes: D004, D007, D008, D035, D040, F001, F002, F005
WS8, WS11, WS12	22	Table 1 contains the Process Feed Materials for Metal Operations Processes including the potential presence of RCRA-regulated substandes and P/S codes used in metal operations.

ORIGINAL

Attachment 3 - Acceptable Knowledge Source Document Summary (continued)

Site(s): Los Alamos National Laboratory		Source Document Tracking Number: D029
AK # [a]	**Source Doc. Page # [b]**	**AK Information Summary**
WS11	24	Table 2 contains the average isotopic content of plutonium material types and enrichments. Table 3 contains the average isotopic content of uranium material types and enrichments.
PR1	Att 2	Attachment 2 contains maps of LANL and TA-55.
WS3, WS11	Att. 3	Attachment 3 contains a detailed time line for metal operations which is broken down by P/S code and hazardous waste numbers

Source Document Data Limitations (if any):

1. Waste volume was not tracked for the P/S codes.

Acceptable Knowlege Expert:

Amy Johns — Amy Johns — Date: 3/6/08

Print /Sign

[a] Obtain from Acceptable Knowledge Documentation Checklist
[b] For microfilm or microfiche, identify box, tape, reel number and location.

LA-UR-02-1716 ~~D009(AK5)~~
LA-UR-01-2556 D029-AK-6

INTERIM CHANGE REQUEST TWCP 15412

☑ **TWCP** ☐ **WRR** ☐ **Other** **If Other, please identify:** _____	**IC Number:** 1
Person Requesting this Interim Change: Sandy Wander	
DOCUMENT INFORMATION	
Document Title: Process Acceptable Knowledge Report for Metal Operation Processes at TA-55	**Document No./Revision:** TWCP-AK-2.1-003,R.2 (LA-UR-02-1716)
Effective Date of Current Document: 05/17/01	**Document Preparer:** John Musgrave

CHANGE INFORMATION: Please ensure the following changes are made:

Section/Page	Change:	Reason/Justification:
Title Page, p.1	Delete "Summary" from title to read: "Process Acceptable Knowledge Report for Miscellaneous Operations at TA-55"	Clarification
Global	Change all occurrences of "Sampling Plan" to "AK Information Summary"	document title change
Note and 3rd column heading / pp. vi and viii	Delete "summary" from "NOTE" at top if page vi and from "*" note at bottom of page viii Change 3rd column heading on page vi and vii to read:"Process AK Report*" Delete entire 4th column	Clarification
Global search and delete / p. 2.	From all references to "process AK summary report," delete "summary" to read "process AK report" From all titles that previously read "Process Acceptable Knowledge Summary Report, " delete "Summary" to read "Process Acceptable Knowledge Report"	Clarification
RCRA Constituents/ EPA Hazardous Waste Numbers / p. ix	Add "ARI" to bullet beginning "D007 (chromium)"	Per SME: Code added due to possible stainless steel leaching.
	Delete bullet beginning "D022 (chloroform)"	D022 does not apply because high temperature processing would vaporize all chloroform.
	Add "(between 1979 through 1984)" to bullet beginning "D035 (methyl ethyl ketone)"	Update date-information to reflect time usage.
	Add "MA (from 1995 to the present)" to bullet beginning "F002"	Update report to reflect timeline information
	Add "(between 1979 through 1984)" to bullet beginning "F005"	Update report to reflect timeline information

3.5.1 / p. 8	In third paragraph-on p. 8, insert "at 1200 °C" at end of next to last sentence. Insert "and carry D022 in P/S code CF in nitrate operations" to end of last sentence. In fifth paragraph on p. 8, insert ", thus carrying the D040 code" to end of last sentence.	Per SME: The sintering is a high temperature process, updating report to reflect information. P/S code FF carries code D040. Update report to reflect information.
3.5.2.3 / p. 11	In next to last paragraph, insert ", but no TRU waste is generated" to the end of the next to last sentence.	Per SME, Freon TF used to clean, but no TRU waste generated in this process, therefore no F code.
Table 4 / p. 28	In the "Chloroform" row, change the last sentence in the third column to read: "D022 **does not** apply~~ies~~ to P/S code FF ~~although concentrations are expected to be below RCRA threshold because freeze-drying should have~~ **because sintering** removed ~~most, if not all, of~~ the residual chloroform ~~before the microspheres were taken into the glovebox for sintering~~.	Per SME, D022 does not apply to P/S code FF because high temperature processing would vaporize all chloroform.
4.1 / p. 29	Insert ", and to P/S code MA from 1995 to the present" at the end of the second bullet Insert "from 1970 through 1984" to the end of the third bullet	Per SME, clarification of timelines, update report to reflect changes.
4.2 / p. 29	Insert "and ARI after 1996 to the end of the third paragraph	Per SME, D007 added after 1996 to P/S code due to possible stainless steel leaching.
4.2 / p. 30	Delete fourth paragraph from bottom, beginning "D022 applies" Insert "from 1979 through 1984" at end of third from last paragraph, beginning "D035 applies"	Per SME, D022 does not apply to P/S code FF because high temperature processing would vaporize all chloroform. Report updated to reflect information Per SME, timeframe updated
Attach 3/ pp. 2–4 Page 1	Delete "D022 from FF timeline. Insert "(only from 1979 through 1984)" after D035 and F005 and insert "F002 (from 1995 to the present)" on lower line in MA timeline. Move vertical bar to end of 1985 from middle of 1984 in PE timeline. Change the year "1982" to "1992" in the second note at end of table. Add "D008" to DOP timeline	Timelines updated to reflect SME and timeframe usage information.
Attach. 4 / pp. 1, 2, 3, 4, 5, 6, 7, 8, and 9	Insert "D007" in "EPA Codes" column of ARI row. Delete "D022" from "EPA Codes" column of FF row. Insert "F002" to "EPA Codes" column of MA row. Insert "D008 (gloves)" to "EPA Codes" column of WE row. Added "*D008" to EPA Codes column as appropriate	Table updated to reflect information added in report per SME and/or timeframe usage.
Attach. 6, pp. 1, 2	Add new Attachment 6 and update "Contents" page to reflect addition Add following paragraph to end of Section 2.0: "When discrepancies in AK information are discovered, they are documented and resolved in accordance with *Acceptable Knowledge Documentation* (TWCP-QP-1.1-021). The resulting documentation is found in Decision/Discrepancies Resolution Documentation (Attachment 6)."	New TWCP-QP-1.1-021 requirement

Date changes submitted: 02/12/02		**Desired effective date for changes**:	
INTERIM CHANGE APPROVAL			
Document Preparer: S. Wander		Reviewer (if applicable): Facility Rep.	
Signature: Sandy Wander	Date: 3/19/02	Signature: Wayne A Punjak	Date: 3/20/02
Site Project QA Officer: M A Gavett		LAAO (if implementing WAP requirements): NA	
Signature: M A Gavett	Date: 3/21/02	Signature:	Date:
☑ IC Approved ☐ Major Rev. ☐ Hold for next Rev.		Do changes affect WAP data collection, data quality, or performance criteria? ☐ Yes ☑ No If yes, date of CBFO approval: _____ (documentation attached)	
Site Project Mgr/Line Mgr: P Rogers			
Signature: Pamela Rogers	Date: 3/19/02		
USQ Screener (if applicable): NA			
Signature: G M Polley	Date: 3-25-02		
NOTE: Changes can be designated on the document and attached to this form.			
Effective date for this interim change: 03/21/02			

TA-55 PLUTONIUM FACILITY
ACCEPTABLE KNOWLEDGE REPORT

REPORT TITLE: Process Acceptable Knowledge Report for Metal Operation Processes at TA-55

REPORT NUMBER: TWCP-AK-2.1-003,R.2 (LA-UR-01-2556)

WASTE GENERATED FROM PROCESS/STATUS CODES: AO, ARI, BA, BC, BT, CA, CN, CO, CT, DA, DOP, DT, EL, ELW, EM, EVAC, FF, FSPF, GI, HG, ID, IN, ITF, ITF4, ITF7, JA, KBTF, MA, MBC, MOX, MW, OB, OM, PCH, PD, PE, PF, PH, PIG, RAP, RAP2, RL, RS, SRL, TIGR, UA, VD, WE, WLT

EFFECTIVE DATE: 05/17/01

NEXT REVIEW DATE: 05/17/03

DOCUMENT PREPARER:

John Musgrave	5/7/01
NAME	DATE

APPROVALS:

June Fabryka-Martin	5/7/01
INDEPENDENT TECHNICAL REVIEWER/EDITOR	DATE
Mavis R Lin	5/10/01
SITE PROJECT MANAGER	DATE
Sandy Wander	5/14/01
WASTE CERTIFICATION OFFICIAL	DATE
M A Gavett	5/14/01
SITE PROJECT QA OFFICER	DATE
Charles L. Foxx	5/7/01
FACILITY REPRESENTATIVE	DATE

© 2000, 2001 University of California

HISTORY OF REVISIONS

Revision No.	Date	Pages Revised	Reason for Change
0	06/28/00	—	New report (TWCP-03942)
1	12/04/00	All	Make report a controlled document and respond to CAO CAR-00-036
2	05/17/01	All	Respond to CBFO review comments and update to include new AK information
2/IC1	03/21/02	Title page, v–ix, 1, 8, 11, 28–30, Att. 3, Att. 4	Respond to audit comments

CONTENTS

Section **Page**

ACRONYMS iv

TA-55 PROCESS/STATUS (P/S) CODE INDEX vi

PROCESS ACCEPTABLE KNOWLEDGE SUMMARY viii

1.0 INTRODUCTION 1

2.0 METHODOLOGY USED TO SEARCH FOR AK RECORDS 1

3.0 DESCRIPTION OF THE PROCESS WASTE 3
- 3.1 Facility and Mission 3
- 3.2 Basis, Rationale, and Assumptions Used to Delineate the Waste Streams 3
- 3.3 Waste Physical Form and Content Description 4
- 3.4 Waste Volume and Time Period of Generation 4
- 3.5 Waste Generation Processes 5
- 3.6 Material Inputs to the Waste Generation Processes 22

4.0 ASSIGNMENT OF EPA HAZARDOUS WASTE NUMBERS 26
- 4.1 F, K, and P Listings 26
- 4.2 Toxicity Listings 29

5.0 VERIFICATION THAT IGNITABLE, REACTIVE, AND CORROSIVE WASTES WERE EXCLUDED 30

6.0 VERIFICATION THAT INCOMPATIBLE CHEMICALS WERE PROHIBITED 31

7.0 VERIFICATION THAT THERE ARE NO COMPRESSED GASES, FREE LIQUIDS, NONRADIONUCLIDE PYROPHORICS, SEALED CONTAINERS GREATER THAN FOUR LITERS IN VOLUME, OR >1% RADIONUCLIDE PYROPHORICS 32

8.0 VERIFICATION THAT THERE ARE NO POLYCHLORINATED BIPHENYLS (PCBs) IN THE WASTE STREAM 32

9.0 CITED PROCEDURES AND REQUIREMENTS DOCUMENTS 33

Tables

1 Process Feed Materials for Metal Operation Processes 22
2 Average Isotopic Content of Plutonium Material Types and Enrichments 24
3 Average Isotopic Content of Uranium Material Types and Enrichments 24
4 Chemical Inputs to Processes Described in This Report 27

Attachments

1 Acceptable Knowledge Roadmap (13 pages)
2 LANL and TA-55 Sites Maps (2 pages)
3 Timeline for Metal Operations (5 pages)
4 Process Inputs and Outputs (9 pages)
5 Simplified Process Flow Diagram for Metal Operations (3 pages)
6 Decision/Discrepancies Resolution Documentation (2 pages)

ACRONYMS

AK	acceptable knowledge
AK Information Summary	*Los Alamos National Laboratory Transuranic Waste Characterization Acceptable Knowledge Information Summary* (TWCP-PLAN-0.2.7-001,R.5)
ARIES	Advanced Recovery and Integrated Extraction System
CFR	*Code of Federal Regulations*
C-N-O	carbon-nitrogen-oxygen
D	EPA hazardous waste number prefix for wastes with hazardous characteristics, defined in 40 CFR Subpart C, Sections 261.21 to 261.24
DL	discard limit
DOE	U.S. Department of Energy
DOR	Direct Oxide Reduction (process conducted under P/S code OR)
DTP	detailed technical procedure
DWLS	Discardable Waste Log Sheet
EB	electron beam
EPA	U.S. Environmental Protection Agency
F	EPA hazardous waste number prefix for hazardous wastes from non-specific sources, defined in 40 CFR Subpart D, Section 261.31
GB	glovebox
GTAW	gas tungsten arc welder
HEPA	high-efficiency particulate air
HIP	Hot Isostatic Press
HWN	hazardous waste number
K	EPA hazardous waste number prefix for hazardous wastes from specific sources, defined in 40 CFR Subpart D, Section 261.32
LANL	Los Alamos National Laboratory
LLW	low-level waste
MEK	methyl ethyl ketone
MET	Metal [designator for individual documents in metal operation processing reports in Attachment 1, Acceptable Knowledge Roadmap]
MOX	mixed oxide
MT	material type
Nd:YAG	Neodynium:Yttrium Alumina Garnet
NMT	Nuclear Material Technology
OSWER	Office of Solid Waste and Emergency Response (EPA)
P	EPA hazardous waste number prefix for acute hazardous waste defined in 40 CFR Subpart D, Section 261.33
P/S [code]	process/status [code]
PCB	polychlorinated biphenyl
PF-4	Plutonium Facility, Building 4
PIGMA	pressurized inert gas metal arc [welder]
QA	quality assurance
QP	quality procedure

R&D	research and development
RCRA	Resource Conservation and Recovery Act
RLWTF	Radioactive Liquid Waste Treatment Facility
RMDC	Records Management/Document Control
SME	subject matter expert
SNM	special nuclear material
SOP	safe/standard operating procedure
TA	technical area
TIG	tungsten inert gas
TRU	transuranic
TWCP	Transuranic Waste Characterization/Certification Program
UCNI	Unclassified Controlled Nuclear Information
WIPP	Waste Isolation Pilot Plant
WIPP WAC	*Waste Acceptance Criteria for the Waste Isolation Pilot Plant* (DOE/WIPP-069)
WIPP WAP	Attachment B, Waste Analysis Plan, to the *Hazardous Waste Facility Permit Issued to the Waste Isolation Pilot Plant* (EPA No. NM4890139088)
WODF	Waste Origination and Disposition Form
WPRF	Waste Profile Request form

TA-55 PROCESS/STATUS (P/S) CODE INDEX

Note: This index indicates the main process AK report and report section that covers each P/S code mentioned in this report.

P/S Code	P/S Name	Process AK Report*
ACL	Analytical Chemistry Laboratory	Miscellaneous Operations
AO	Assembly Operation	Metal Operation Processes
ARI	ARIES	Metal Operation Processes
BA	Basement Isopress	Metal Operation Processes
BC	Physical Properties	Metal Operation Processes
BT	Burst Testing	Metal Operation Processes
CA	Casting	Metal Operation Processes
CF	Cement Fixation	Nitrate Operations
CN	C-N-O Analysis	Metal Operation Processes
CO	Comminution	Metal Operation Processes
CT	Compatibility Testing	Metal Operation Processes
DA	Alloy Development	Metal Operation Processes
DOP	Detector Oxide Preparation	Metal Operation Processes
DT	John Ward R&D	Metal Operation Processes
EL	Element Loading	Metal Operation Processes
ELW	Experimental Laser Welding	Metal Operation Processes
EM	Electron Microscopy	Metal Operation Processes
ER	Electrorefining	Pyrochemical Processes
EVAC	Evacuation and Bake Out	Metal Operation Processes
FF	Fuel Fabrication	Metal Operation Processes
FSPF	Special Furnace Operation	Metal Operation Processes
GI	Pellet Grinding & Inspection	Metal Operation Processes
HG	Pu Removal by Mercury	Metal Operation Processes
HP	Cement Fixation	Nitrate Operations
ID	Immersion Density	Metal Operation Processes
IN	Inspection	Metal Operation Processes
IS	Incinerator	Nitrate Operations
ITF	Impact Test Facility	Metal Operation Processes
ITF4	Impact Test Facility	Metal Operation Processes
ITF7	Impact Test Facility	Metal Operation Processes
JA	Gas Isostatic Press	Metal Operation Processes
KBTF	Kolsky Bar Test Facility	Metal Operation Processes
MA	Machining	Metal Operation Processes

P/S Code	P/S Name	Process AK Report*
MBC	Crystal	Metal Operation Processes
ME	Metallography	Miscellaneous Operations
MOX	Mixed Oxide Fuel Production	Metal Operation Processes
MW	Metal Working	Metal Operation Processes
OB	Oxide Blending	Metal Operation Processes
OM	Oxygen To Metal Ratio Determination	Metal Operation Processes
OR	Direct Oxide Reduction	Pyrochemical Processes
PAF	Passivation Furnaces	Nitrate Operations
PCH	Plasma Chemistry	Metal Operation Processes
PD	Pit Disassembly	Metal Operation Processes
PE	Sputtering Process	Metal Operation Processes
PF	Plutonium Surfaces	Metal Operation Processes
PH	Thermal Hydride/Dehydride	Metal Operation Processes
PIG	Welding	Metal Operation Processes
RAP	Research Alloy Preparation	Metal Operation Processes
RAP2	Research Alloy Preparation	Metal Operation Processes
RL	Radiochemical Coating	Metal Operation Processes
RM	Reduction to Metal	Special Processing
RS	Pellet Sintering	Metal Operation Processes
SP	Scrap Dissolution, G438	Nitrate Operations
SRL	Special Recovery Line	Metal Operation Processes
SS	Salt Stripping	Pyrochemical Processes
TIGR	Thermally-Induced Gallium Removal	Metal Operation Processes
UA	Uranium Fabrication	Metal Operation Processes
VD	Vapor Degreaser and Sand Blasting	Metal Operation Processes
WE	Welding	Metal Operation Processes
WLT	Welding Leak Test	Metal Operation Processes
WM	Waste Management	Miscellaneous Operations

* Process AK reports: Metal Operation Processes (this report), Miscellaneous Operations (TWCP-AK-2.1-004,R.2), Pyrochemical Processes (TWCP-AK-2.1-006,R.2), and Special Processing (TWCP-AK-2.1-007,R.2)

PROCESS ACCEPTABLE KNOWLEDGE SUMMARY

Waste Generating Process: Metal Operations

P/S codes: AO, ARI, BA, BC, BT, CA, CN, CO_x CT, DA, DOP, DT, EL, ELW, EM, EVAC, FF, FSPF, GI, HG, ID, IN, ITF, ITF4, ITF7, JA, KBTF, MA, MBC, MOX, MW, OB, OM, PCH, PD, PE, PF, PH, PIG, RAP, RAP2, RL, RS, SRL, TIGR, UA, VD, WE, WLT

Type of waste generated:

Retrievably stored and newly generated, mixed and non-mixed debris

Site: LANL

Facility Mission (including defense and non-defense programs):

TA-55 has extensive capabilities for the extraction and recovery of plutonium from residues and scraps generated from operations at various LANL facilities and other DOE sites in the defense complex. The recovered plutonium is converted into pure plutonium feedstock. These manufacturing and recovery operations, as well as associated maintenance operations and TA-55 plutonium research are the sources of TRU waste contaminated scrap, residues, and debris generated at TA-55. The scrap and residues are processed to recover as much plutonium as practicable before disposal. Wastes from metal operations are generated from plutonium recovery and purification for defense and non-defense programs; these wastes are generated and produced in the same rooms and gloveboxes and so were not segregated until August 27, 1998.

Area(s) or building(s) where the process waste was generated (including operations carried out in those areas):

TA-55 Plutonium Facility, Building PF-4, rooms 115, 124, 125 and 126 (reactor fuel development activities) and rooms 38 East, 113, 114, 201E, 305, 306, 308, 309, 319 and 327 (other metal operation processes). Plutonium operations included preparing ultra-pure plutonium metal, alloys, and compounds; preparing specific alloys on a large scale; determining high temperature thermodynamic properties of plutonium; and disassembling compounds for inspection and analysis.

Description of the process waste (physical form and typical content description):

Solid TRU waste from metal operation processes consists primarily of graphite and debris waste, including cellulosic, ceramic, plastic, rubber, metal, and glass debris. Typical debris items are rags, gloves (leaded and non-leaded), small tools, steel storage containers, magnesium oxide crucibles, HEPA filters, paper, cardboard, strain gauges, plastic items, and scrap stainless steel.

Solid TRU waste from reactor fuel development processes: tungsten carbide and hardened steel press dies, diamond or aluminum oxide grinding wheels, HEPA filters, rubber, wood, paper, rags, cardboard, glass vials, balances, steel and brass storage containers, ceramic, graphite, magnesium oxide crucibles, vacuum pumps, graphite trays, tungsten trays, molybdenum trays, thermocouples, heating elements, non-leaded gloves, and stainless and hardened steel balls.

Summary Category Groups: S3000, S5000

Waste Matrix Codes: S3100, S3200, S5100, S5110, S5120, S5300, S5310, S5311, S5400

Description of the waste-generating process:

The overall defense-related goal of the metal operation processes is to cast and machine plutonium metal. Reactor fuel development is also part of metal operation processes.

Process feed:

Plutonium metal or metal alloys and oxides, disassembled weapons components (pits), other actinide metals or metal alloys and oxides, reactor fuel pellets.

Radioisotopic content of the waste:

Variety of uranium and plutonium material types with different well-defined isotopic compositions; various radionuclides used as sources, including Am-241, Am-243, Ce-144, Cm-244, Pa-231, Np-237, Th-232, Th-232 enriched in Th-230, U-233, and depleted uranium. Am-341, Np-237, and U-234 may be present at detectable concentrations as decay products of their plutonium precursors. Cs-137 and Pa-231 may be occasionally be present in trace amounts.

RCRA Constituents/EPA Hazardous Waste Numbers:

- D004 (arsenic): P/S code PE (1984–1985 only)
- D007 (chromium): P/S codes ARI, PCH
- D008 (lead materials): P/S codes BT, DOP, and KBTF
- D008* (leaded gloves until May 1992): P/S codes BA, BC, CA, DA, DOP, IN, JA, MA, MW, PCH, PE, PF, PH, RL, UA, VD, WE
- D035 (methyl ethyl ketone): P/S code MA (between 1979 through 1984)
- D040 (trichloroethylene): P/S codes EL, FF, and MA (for MA, applies from 1979–1992 and from February 2000–present)
- F001: P/S code MA due to use of trichloroethylene (from 1979–1992 and from February 2000 to the present)
- F002: P/S codes DA and MA (form 1995 to the present) due to use of Freon TF
- F005: P/S code MA due to use of methyl ethyl ketone (between 1979 through 1984)
- No K or P codes apply

Process waste volume (if known):

Waste volumes for each P/S code have not been tracked. Instead, waste items are segregated into similar material types and packaged in waste containers. Waste containers are segregated into waste streams in the AK Information Summary, and waste stream volumes are reported in that document.

Years of generation for the process waste: 1979–present

PROCESS ACCEPTABLE KNOWLEDGE REPORT FOR METAL OPERATION PROCESSES AT TA-55

1.0 INTRODUCTION

All transuranic (TRU) waste must be sufficiently characterized and certified before it is shipped to the Waste Isolation Pilot Plant (WIPP). The U.S. Environmental Protection Agency (EPA) allows use of acceptable knowledge (AK) for waste characterization. EPA uses the term AK in its guidance document, *Waste Analysis at Facilities that Generate, Treat, Store and Dispose of Hazardous Waste.* Attachment B, Waste Analysis Plan, to the *Hazardous Waste Facility Permit Issued to the Waste Isolation Pilot Plant* (EPA No. NM4890139088) (WIPP WAP) defines AK and provides guidelines on how AK should be obtained and documented.

This process AK summary report was prepared in accordance with *Acceptable Knowledge Documentation* (TWCP-QP-1.1-021). The primary purpose of this report is to systematically organize, evaluate, and summarize detailed AK information about individual processes that generated TRU waste in the Plutonium Facility at Technical Area (TA) 55, one of the TRU-waste generators at Los Alamos National Laboratory (LANL). By doing so, this report provides detailed technical support for several waste stream AK summary reports that include these process wastes.

2.0 METHODOLOGY USED TO SEARCH FOR AK RECORDS

The AK search for the information related to TA-55 waste streams resulting from metal operation processes covered:

- Review of the *Los Alamos National Laboratory Transuranic Waste Characterization Acceptable Knowledge Information Summary* (TWCP-PLAN-0.2.7-001) (AK Information Summary) that includes information regarding all TRU waste streams

- Review of documents related to waste generation and waste management activities at TA-55 as listed on the Acceptable Knowledge Roadmap (Attachment 1)

- Interviews with personnel involved with waste generation and waste management at TA-55 as listed on the Acceptable Knowledge Roadmap (Attachment 1)

NOTE: Much of the AK information related to metal operations is contained in Transuranic Waste Characterization/Certification Project (TWCP) Record No. TWCP-3541. Individual documents in this record have been assigned a separate identifier, MET-nn, where nn is a sequential 1- or 2-digit number. This referencing nomenclature is used throughout this report and its attachments.

- Analyses of individual processes generating waste, and evaluations of the potential for Resource Conservation and Recovery Act (RCRA)-regulated constituents to be

present in the process wastes, based on subject matter expert (SME) interviews and any relevant records

The TWCP Records Management/Document Control (RMDC) Center contains copies of the documents referenced in this report. Any Unclassified Controlled Nuclear Information (UCNI) is contained in these records, and will not be included in this report. Such records are identified as UCNI in the Acceptable Knowledge Roadmap (Attachment 1).

This process AK report is part of a set of closely related reports about TRU-waste generating activities at TA-55. For convenience in organizing AK for plutonium processing at this facility, the processes were categorized into six operational areas. The multiple processes in each area are described in detail in the following six process AK reports for plutonium:

- *Process Acceptable Knowledge Report for Chloride Operations at TA-55* (TWCP-AK-2.1-002)
- *Process Acceptable Knowledge Report for Metal Operation Processes at TA-55* (TWCP-AK-2.1-003) [this report]
- *Process Acceptable Knowledge Report for Miscellaneous Operations at TA-55* (TWCP-AK-2.1-004)
- *Process Acceptable Knowledge Report for Nitrate Operations at TA-55* (TWCP-AK-2.1-005)
- *Process Acceptable Knowledge Report for Pyrochemical Processes at TA-55* (TWCP-AK-2.1-006)
- *Process Acceptable Knowledge Report for Special Processing at TA-55* (TWCP-AK-2.1-007)

Each process AK report contains information on multiple individual processes that are assigned unique identifiers called process/status (P/S) codes. For example, metal operation processes include 49 individual processes that are each assigned a P/S code, as listed on the cover page of this report. The search and compilation of AK information was based on P/S code because that is the most detailed level of process information generally recorded in waste generation records. The process AK reports frequently cross-reference one another because P/S codes in one operational area often provide the material feed for P/S codes in another area. An index of P/S codes cited in this process AK report follows the list of acronyms; this index lists process descriptions and the primary process AK report in which that P/S code is discussed.

When discrepancies in AK information are discovered, they are documented and resolved in accordance with *Acceptable Knowledge Documentation* (TWCP-QP-1.1-021). The resulting documentation is found in Decision/Discrepancies Resolution Documentation (Attachment 6).

3.0 DESCRIPTION OF THE PROCESS WASTE

The following sections describe processes used in metal operation processing, and identify the resulting wastes as well as outputs that are sent to other operations, such as nitrate operations, for further processing.

3.1 Facility and Mission

The TA-55 Plutonium Facility (Building PF-4) recovers plutonium from scrap and residues generated throughout the U.S. Department of Energy (DOE) defense complex, and processes it into pure plutonium oxide for conversion to metal and other products. A LANL site map and a detailed map of the buildings at TA-55, including Building PF-4, are shown in Attachment 2.

Most processes in metal operations were solely defense-related (TWCP-614, TWCP-4162). Exceptions are the majority of activities in the reactor-fuel fabrication program that was active from 1979 to 1997, and ongoing non-defense research and development (R&D) activities. However, wastes from various processes were not segregated by funding source, waste-generating process, or waste-generating location (e.g., room or glovebox) until recently (August 27, 1998), but were segregated and packaged based on waste type (TWCP-887, TWCP-4162, TWCP-4167). Consequently, a single waste container often contains wastes from multiple processes. Some debris waste was also co-mingled with room trash related to these same operations (both defense and non-defense), and was initially boxed as low-level waste (LLW). Subsequently, some of these waste boxes were returned for disposal in drums as TRU waste when on-site radioassay results showed them exceeding the low-level discard limits (DLs) (TWCP-816).

3.2 Basis, Rationale, and Assumptions Used to Delineate the Waste Streams

The basis for delineation of TA-55 waste streams was established by the evolving set of LANL and TA-55 waste management plans and site-specific procedures, which date back to the start of operations at the Plutonium Facility in 1978 (TWCP-352, TWCP-697, TWCP-700, TWCP-701, TWCP-3943). The stated guidance and practice from the beginning, continuing to the present day, has been to handle and package all combustible and noncombustible debris waste in a similar fashion, regardless of the process (i.e., P/S code) of origin. Inspection, collection, documentation and packaging operations of solid, certifiable TRU wastes at TA-55 are conducted in PF-4 by a waste management section or team (TWCP-352, TWCP-700, TWCP-701, TWCP-3943). Wastes from all TRU waste-generating activities at TA-55 are handled and packaged into waste containers by this team based on the material content of the waste, without regard to P/S code. Materials are considered waste only when they have been received and processed by the waste management team.

Assignment of a particular waste container to a waste stream is then made on the basis of waste generator information compiled in the AK Information Summary. Waste generator information is reviewed to identify the types and sources of waste items present in each drum, to evaluate the most appropriate waste summary group, waste matrix code, and potential for the presence of hazardous constituents. In the AK Information Summary, TA-55 wastes have been assigned to waste streams based on the waste segregation schemes used by TA-55:

- By radioisotope content (Pu-238 or Pu-239 material type)
- By material matrix (combustible, noncombustible, metal, glass, etc. waste types)
- By hazardous waste status (mixed, non-mixed, or special case waste streams)

3.3 Waste Physical Form and Waste Content Description

Wastes generated during metal operation processes consist primarily of debris wastes, and wastes entered into the cement fixation process or sent to the Radioactive Liquid Waste Treatment Facility (RLWTF) at TA-50. General debris waste consists of cellulosic materials (for example, paper, cloth), plastics (for example, gloves, tape, labware), rubber, metal, and glass debris.

- Debris waste from the reactor fuel development operations includes tungsten carbide and hardened steel press dies; diamond or aluminum oxide grinding wheels; high-efficiency particulate air (HEPA) filters; rubber; wood; paper; rags; cardboard; glass vials; balances; steel and brass storage containers; ceramic, graphite, and magnesium oxide crucibles (crucible waste out of P/S code CN), vacuum pumps; graphite and molybdenum trays; thermocouples; non-leaded gloves; and stainless and hardened steel balls.

- Debris waste from on-going metal operations include rags, graphite, gloves (leaded and non-leaded), steel storage containers, graphite and tantalum crucibles, HEPA filters, paper, cardboard, plastic items, and scrap aluminum and stainless steel.

- Debris waste from developmental metal operations include rags, gloves (leaded and non-leaded), HEPA filters, paper, cardboard, strain gauges, plastic items, and scrap stainless steel.

These debris items are contaminated with small amounts of radioactive and chemical substances from metal operation processes.

3.4 Waste Volume and Time Period of Waste Generation

This report covers waste streams generated from 1979, when metal operation processes first began, to the present. Wastes from the metal operation processes have different associated EPA hazardous waste numbers (HWNs) depending on

the time period during which they were generated. The P/S codes, their time period of generation, and corresponding EPA HWNs are shown graphically in Attachment 3, Time Lines.

Waste volumes for each P/S code have not been tracked. Instead, waste items are segregated into similar material types and packaged in waste containers. Waste containers are assigned to waste streams in the AK Information Summary, and waste stream volumes are reported in that document.

3.5 Waste Generation Processes

The following subsections describe the generation of waste by metal operation processes.

Manufacturing and research operations performed at TA-55 in the production of plutonium also generate plutonium-contaminated scrap and residues. The metal operation processes contribute to these scrap and residue wastes. These residues are processed to recover as much plutonium as is practical (TWCP-352). TA-55 has extensive capabilities for the extraction and recovery of plutonium from residues and scraps generated from operations at various LANL facilities and other DOE sites. These recovery and manufacturing operations, associated maintenance operations, and TA-55 plutonium research are the sources of TRU waste generated at TA-55.

Detailed background information about the TA-55 plutonium recovery processes can be found in *Waste from Plutonium Conversion and Scrap Recovery Operations* (TWCP-352). A full-block flow diagram for plutonium processing and waste management at TA-55 is given in reference TWCP-886.

Metal operation processes can be divided into three categories:

- Reactor fuel development processes (Section 3.5.1)
- On-going metal operation processes conducted since TA-55 began operations (Section 3.5.2)
- Developmental metal operations that were developed recently (Section 3.5.3)

Processes included in each of these three categories are described below. Timelines for these processes are shown Attachment 3. A complete listing of P/S codes for metal operation processes, their descriptions, feed materials, and inputs and outputs is found in Attachment 4. A simplified process flow diagram for metal operations is found in Attachment 5.

3.5.1 Reactor Fuel Development (P/S codes CN, CO, CT, EL, FF, GI, ID, MOX, OB, OM, RS)

Procedures for reactor fuel development activities reviewed during the AK search did not have P/S codes assigned to them. However, SME input provided assignment of P/S codes to these procedures (references MET-1 through MET-38 and MET-59 [all in TWCP-3541]). The descriptions below are based on SME input, as indicated in the text and in Attachment 4.

Enriched uranium oxide, depleted uranium oxide, and/or plutonium oxide feeds were blended and mixed with graphite and stearic acid. Stearic acid was used to keep the material from sticking during milling. The blended oxide was then pressed into briquettes. This operation was performed under P/S code OB. Small pieces of briquette and powder left after pressing were sent to the vault or to recovery.

The briquettes produced under P/S code OB were transferred to P/S code RS for carbothermic reduction. In this process the plutonium or uranium oxide were reduced to the carbide form, resulting in the removal of most carbon and nearly all oxygen from the material, and in the decomposition of the stearic acid. The carbide briquettes were then transferred to P/S code CO.

A jaw crusher was used to reduce the size of the carbide briquettes in preparation for pulverizing in P/S code CO. The crushed material was mixed with 0.2 wt.% stearic acid and polyethylene glycol. A vibratory mill pulverized the crushed material to 325 mesh. Nickel powder at a concentration of 2000 ppm was added to the pulverized carbide as a sintering aid. This material was sent back to P/S code RS.

The plutonium and uranium carbide powder was pressed into pellets under P/S code RS. These pellets were then loaded into molybdenum trays. The trays were placed in a furnace at 450 °C to burn off the stearic acid and polyethylene glycol. Small amounts of MolyKote were used for hand pressing of pellets. The pellets were sintered in an argon-hydrogen atmosphere at 1600 °C. Sintered pellets were transferred to P/S code GI.

Pellets were inspected to meet specification (P/S code GI). Out-of-specification material was ground to specification with either diamond or aluminum oxide grinding wheels. A final inspection was performed on these pellets with a hand micrometer, which was later replaced by a laser micrometer. Those pellets that met final inspection specifications were transferred to P/S code EL. Those that did not were sent to the vault for recovery. Sample pellets were collected for chemical analysis (P/S code ACL), carbon-nitrogen-oxygen (C-N-O) analysis (P/S code

CN), compatibility testing (P/S code CT), immersion density measurements (P/S code ID), metallographic inspection (P/S code ME), and/or determination of the oxygen to metal ratio (P/S code OM). (P/S codes ACL and ME are discussed in *Process Acceptable Knowledge Report for Miscellaneous Operations at TA-55* [TWCP-AK-2.1-004].)

Fuel pellets were loaded into fuel elements under P/S code EL. Pellets were placed into "V" troughs made of 1-inch x 1-inch V-shaped stainless steel and aluminum for measurement of fuel pellet dimensions. After the dimensional analysis, the pellets were transferred into another glovebox through a one-inch port. Maintenance of a differential pressure between gloveboxes, with lower pressure in the glovebox where dimensional analysis was done, ensured the cleaniness of the glovebox in which the fuel cladding was added. The fuel pellets were transferred into the cladding glovebox through the port. The cladding tube was held in a lathe while the pellets were pushed into the cladding with a pushrod. A stainless steel shroud tube was placed in the cladding tube prior to insertion of the pellets. A spring and end cap were placed in the open end of the cladding tube, and a tungsten inert gas (TIG) weld was made at the joint between the end cap and the cladding. Cladding, spring, and end cap were stainless steel. Bonding of the fuel was done with either helium or sodium. Any excess sodium was reacted with Dowanol 80 to form a stable sodium salt, which prevented metallic sodium from entering the waste stream.

A cleaning machine was used outside the glovebox for cleaning the different tubing prior to loading. The cleaning solution was ethanol, water, and a mild caustic or acid. Any waste generated from this operation would not be TRU waste. These operations took place in Room 124 from 1979 until 1994.

In February 1988, P/S codes CN, CO, CT, EL, GI, ID, OB, OM, and RS for reactor fuel development became P/S code FF, marking the change from carbide fuels to nitride fuels. All processes under the old P/S codes should have remained the same under P/S code FF. Molybdenum equipment was replaced with tungsten equipment. No changes occurred in the chemicals used in the processes except for removal of the nickel sintering aid. Defense-related SP100 reactor fuel wastes were segregated from all other wastes.

Magnesium perchlorate was used in the glovebox line in P/S code FF, and was the only chemical used there (TWCP-5158). It was used as a water getter, and was changed once during the period 1987 to 1992. The spent chemical was sent to cement fixation, P/S code CF.

From 1988 to 1989, P/S code MOX was set up to fabricate mixed oxide (MOX) fuel. Researchers from Hanford were the principal personnel involved in the work. Only a small amount of LANL waste was generated under this P/S code; the remainder was segregated as Hanford-generated waste. Zinc stearate was used as an anti-sticking agent during blending.

Starting in 1996 and continuing to the present time, LANL began work on MOX fuel under P/S code FF. As a result of the current effort in MOX fuel development, the issue of gallium removal became important. Early thermal gallium removal was the precursor to Thermally Induced Gallium Removal under P/S code TIGR (see section 3.5.3.11).

Some R&D efforts took place under P/S code FF. Microspherical fuel R&D was conducted mostly in a fumehood, not in a glovebox, and the waste generated from this operation would be low level. The microspherical fuel work involved the use of graphite, depleted uranium, sugar, surfactants, and ethylene glycol, which were mixed with water to form slurry. This slurry was sprayed or injected into supercooled hexane or chloroform in order to form frozen microspheres. The microspheres were then freeze-dried before being introduced into a glovebox where they were sintered at 1200 °C. Some of the depleted uranium microspheres were discarded in cemented waste and carry D022 in P/S code CF in nitrate operations.

Uranium residues and scrap from the reactor fuel development program had several disposal paths (MET-75/TWCP-3541). Most of the highly-enriched uranium nitride fuel went to the Y-12 Plant in Oak Ridge, Tennessee, and some remaining material in the TA-55 vault will also be sent there in the near future. However, the Y-12 Plant will not accept this material in the form of scrap or excess because of its plutonium contamination, nor will the Y-12 Plant take depleted nitride pellets due to the low uranium enrichment. Consequently, those items have been oxidized and blended as necessary, canned, and stored in the vault. Depleted nitride material used for development was burned and discarded in a cement matrix. Earlier carbide fuels were sent to Savannah River Site for recovery. MOX material is being consolidated and packaged for shipment and recovery at the Savannah River Site.

Acetone was used outside the glovebox, and ethanol was used inside the glovebox. Trichloroethylene was used as a lubricant for an Isomet cut-off saw, thus carrying the D040 code.

Waste materials generated from the reactor fuel development program included: tungsten carbide and hardened steel press dies; diamond or aluminum oxide grinding wheels; HEPA filters; rubber; wood; paper;

rags; cardboard; glass vials; balances; steel and brass storage containers; ceramic, graphite, and magnesium oxide crucibles (crucible waste out of P/S code CN), vacuum pumps; graphite, tungsten and molybdenum trays; thermocouples; heating elements; non-leaded gloves; and stainless and hardened steel balls.

3.5.2 On-Going Metal Operation Processes

3.5.2.1 P/S Code BA: Basement Isopress

The Autoclave Hot Isostatic Press (HIP) uses high pressure and high temperature (up to 1500 °C) to increase the densities of parts (MET-48/TWCP-3541). R&D projects to bond materials and consolidate powders are also mentioned in the written procedure. In addition to plutonium, other isotopes that may be used in the HIP include Am-241, Cm-244, Np-237, U-233, and Pu-242 as long as the material is placed in coupons. The process takes place in Room 38 East. Wastes include rags and paper from cleaning; tools; spent hydraulic fluid, silicone lubricant and isopropyl alcohol; and miscellaneous materials consisting of stainless steel, aluminum, titanium and firebrick.

3.5.2.2 P/S Code BC: Physical Properties

Measuring Physical Properties (MET-41, MET-64 [both in TWCP-3541]) is a procedure that describes techniques for the study of physical properties of alloys, including the structural, magnetic, electronic and metallurgical properties of actinide metals, alloys and compounds. A muffle furnace with an argon atmosphere is used for testing sample homogeneity or compatibility, and for temporary storage. Measurements include dilatometry (thermal expansion) and electrical resistivity. A Carver press is used to produce sample wires and pellets. The process takes place in Room 113, glovebox G187. Wastes include rags and paper from cleaning; glass, plastic, and metal labware; and discarded dies from the press.

3.5.2.3 P/S Code CA: Casting

The casting process receives plutonium metal from pyrochemical operations under P/S codes RM or SS (described in TWCP-AK-2.1-006 and TWCP-AK-2.1-007, respectively) depending on material type, or from other sources such as P/S code SRL. The metal is combined with

other metal from different sources to produce a product metal that meets purity specifications. Specification metal is then cast as a prealloyed feed aliquot at which time gallium metal is added, it is analyzed chemically in-line to determine the proper gallium content, and the metal is placed into in-line storage. Metal is pulled from in-line storage to cast into shapes. Casting is done by an induction furnace using tantalum crucibles and tantalum puller plugs. Molten plutonium is poured into the graphite mold through a tantalum funnel. Casting is done under vacuum so that the plutonium does not oxidize. The mold is allowed to cool at which time the cast shape is unmolded and sent to heat treatment to homogenize the plutonium. After heat treatment, the parts undergo density determination using bromobenzene. Bromobenzene is volatile, and hence evaporates and is removed by the ventilation system. The cast shape undergoes a final heat treatment and density measurement. The finished cast parts are sent to machining (P/S code MA), or are placed in temporary in-line storage. Other parts produced by casting are transferred to P/S codes such as ITF and KBTF.

Chemical analysis is performed on rejected parts. If the rejected parts meet the chemical requirements, the parts are added to other metal in the metal blending step described above. Those parts that do not meet the chemical specifications are cast into ingots. These ingots are sent to P/S code RM or SS, depending on the material type, to be electrorefined.

Casting skulls, which are small amounts of plutonium left on the furnace and crucible surfaces, are oxidized to plutonium oxide. The plutonium oxide easily brushes from the metal surfaces with a paintbrush, thus allowing the tantalum crucibles and funnels to be reused many times. In addition, scrap from the cast pre-alloyed feed aliquot and the casting step are roasted to oxide. This plutonium oxide is sent to aqueous recovery.

Graphite molds have always constituted the largest volume of waste from casting operations because these molds are used only once. R&D efforts are exploring the use of metal molds because they would be reusable, thereby reducing the amount of waste generated by casting operations. The used graphite molds sometimes undergo a scabbling process in which the graphite mold surfaces are removed so that

residual plutonium can be dissolved from these fines. The graphite molds are discarded as waste under P/S code CA.

Other wastes generated by casting include the occasional discard of tantalum crucibles and funnels, tools, rags, gloves (leaded), gaskets, and small amounts of plastics and glass. All these items would be discarded under P/S code CA.

Bromobenzene and Freon TF are the only chemicals used in casting. Freon TF is used infrequently to clean the furnace and tantalum parts, but no TRU waste is generated. The Freon-cleaned parts are air-dried.

Roadmap references for casting are MET-45, MET-62, and MET-66 (all in TWCP-3541).

3.5.2.4 P/S Code MA: Machining

Machining involves a variety of operations on cast parts obtained from P/S code CA. Machining operations include turning, milling, grinding, and boring. The objective of the machining operations is to bring the parts to their final dimensional specifications.

Chemicals used in the past as coolants during machining include Tap Magic (which contains 1,1,1 trichloroethane) and Freon TF. Tap Magic use was discontinued in 1992, and Freon TF use was discontinued in 1995 because it was an inferior coolant for plutonium due to the nature of machining this metal. Processes within machining have used dry machining techniques since 1992. When cooling is required, SF-2I is used. SF-2I is a perfluro compound made by 3M. Although the components are proprietary information and therefore not known, SF-2I is quite volatile and evaporates during use. Texaco Regal 32 is used as a cutting oil for the final cut on a part because of the superior finish it gives to the final cut. Although Tap Magic contains 1,1,1 trichloroethane, the EPA HWN F002 listing does not apply in this case because the chemical was used as a coolant, and not as a solvent.

Cleaning solvents were used in machining operations in the past, and still are occasionally used, although with less-hazardous substitutes. Methyl ethyl ketone (MEK) (EPA HWNs D035 and F005) was used. Metalprep 79 was a phosphoric acid-based metal cleaner used until about 1992

when it was replaced by a metal cleaner derived from citrus fruit. This cleaner met with only limited success and is no longer used. Freon TF is used to remove oil from turnings (degreasing) before they are sent to recovery. For final cleaning, trichloroethylene was used from 1979 until 1992, when it was replaced by the use of ethanol or isopropanol until February 2000. Since February 2000, trichloroethylene has been used to clean parts at the assembly stage. Cellulosic wastes generated as a result of assembly operations under P/S code MA would have EPA HWN F001 from 1979 to 1992 and again during March 2000, as well as EPA HWN D035 throughout its period of operation (in the absence of information about the extent of use of MEK).

Ultrasonic Pit Inspection is a physical inspection process performed during machining and uses no chemicals. The process takes place in Room 319. The written procedure did not include a process flow diagram.

Roadmap references for machining are MET-42, MET-62, MET-67, MET-68, and MET-76 (all in TWCP-3541).

Wastes generated from machining operations include rags, gloves, small amounts of plastics and other metals, routine glovebox maintenance items, tools, grinding wheels, and cutters. Cellulosic, plastic and rubber wastes generated under P/S code MA would be conservatively assigned the EPA HWNs F001 and F005 because of the historical and continuing use of F-listed solvents. This code would not apply to glass or metal debris because the non-porous surfaces of these materials would not absorb any fluid.

3.5.2.5 P/S Codes MW: Metal Working, PD: Pit Disassembly, and SRL: Special Recovery Line

Pit disassembly is conducted under P/S codes MA, MW, PD, and SRL, depending on whether the pit is contaminated with tritium (MET-42, MET-51, MET-52, MET-53, MET-62 [all in TWCP-3541]). The procedures describe separation and sampling of pit assemblies using milling, turning and grinding techniques. The process takes place in Rooms 305, 308, 309 and 319.

Pits are received and monitored for tritium. If no tritium is detected or is below a specified activity, the pit is placed in GB 386 where it is cut in half, and its components are

separated and decontaminated of slight tritium contamination. Care is taken not to mix non-special nuclear material metals with the special nuclear material (SNM) metals. The non-SNM metals are discarded as waste. Uranium and plutonium shells are decontaminated of minor surface contamination. Uranium shells are sent to the vault. Plutonium shells are sent to the vault or to P/S codes CA, MA, or SS. P/S code SS is discussed in *Process Acceptable Knowledge Report for Pyrochemical Processes at TA-55* (TWCP-AK-2.1-006).

Tritium is recovered in the Special Recovery Line (P/S code SRL) if tritium is above a specified activity. Separation of pit components is done using a special abrasive cut-off wheel. The pit is cut in half, and the shells are cleaned with copper wool and Freon TF. Scrap is sent to recovery or to waste management depending on whether the material is SNM or not. After the shells are cleaned with the copper wool and Freon TF, they are placed in an ultrasonic bath for cleaning using product SF-2I. Tritium-contaminated water is collected and poured over zeolites for disposal.

Small-scale decontamination of tritium-contaminated plutonium and other SNM is done in the SRL furnace. The SRL furnace area consists of different sections, including metal handling, tritium removal furnace, equipment for collecting tritium liberated in furnace, and effluent treatment system. The procedure that describes the operation of the furnace and furnace gas treatment system contains no details on disposition of output materials, or post-run cleaning operations.

Wastes generated from pit disassembly operations include rags and paper from cleaning, glass and rubber labware, hand tools and aluminum foil, cutting wheels, milling machine cutters, and lathe cutting tools. Tritium-contaminated trash is generated in the form of copper wool and rags.

3.5.2.6 P/S Code PCH: Plasma Chemical Reactor

Plasma etching of samples is conducted in a 20-liter vacuum chamber into which up to four process gases are dynamically pumped (MET-40/TWCP-3541). The gases are tetrafluoromethane, hexafluoroethane, perfluoropropane, oxygen, argon and carbon dioxide. Two electrodes are in the chamber: (1) an upper power electrode through which

reactant gas enters, and (2) a lower substrate electrode where the sample is placed. A plasma of the gases is formed through ionization and disassociation of the gases. The process takes place in Room 114, glovebox GB111, and in Room 319, in hood XB305. Wastes include rags and paper from cleaning; glass, plastic and metal labware; used pump oil (Fomblin brand, contains perfluoropolyether); discarded test samples such as tantalum foil, tungsten foil, tungsten-coated silicon, silicon dioxide; and various actinide surfaces. No RCRA-regulated materials are used. Gases are consumed in the plasma. EPA HWN D007 (chromium) is assigned to solid wastes generated under P/S code PCH.

3.5.2.7 P/S Code PH: Thermal Hydride/Dehydride

a. Plutonium Hydriding System

The plutonium hydriding process studies the reactions of Plutonium alloys and other actinides with hydrogen and other gases (MET-43/TWCP-3541). The process takes place in Room 114, glovebox 110, and uses no chemicals other than the gases. Wastes include debris wastes, but the types of wastes are not mentioned in the procedure.

b. Operating the Hydride-Dehydride Systems

The hydride-dehydride operating procedure describes how to safely form plutonium hydride, and then to decompose it to plutonium metal (MET-44/TWCP-3541). Three phases are involved: (1) phase one uses hydrogen gas in large amounts and dehydriding is done in a separate reactor, and (2) phases two and three use a closed loop, minimal hydrogen gas, and a single reactor. The process takes place in Room 114, GB 116, GB 119 and GB 154. No chemicals are used besides the gases. Wastes produced are debris wastes, not RCRA-regulated, including rags and paper from cleaning, used Fromblin pump oil and tools.

3.5.2.8 P/S Code WE: Welding

Welding operations under P/S code WE fall into two categories: encapsulation of radioactive isotopes (MET-39/TWCP-3541) and other welding operations (MET-69/TWCP-3541). Two methods of welding are employed: a gas tungsten arc welder (GTAW) and an

electron beam (EB) welder. Encapsulation of radioactive isotopes involves placing the isotope to be sealed into a stainless steel capsule and subsequently welding the capsule closed. The exterior of the capsule is cleaned with Freon TF. The Freon TF is allowed to evaporate, hence no wiping of the capsule surface with rags is required. Other welding operations include welding of plutonium samples on vanadium in an argon atmosphere, brazing gold to repair platinum frits, welding titanium to repair titanium boats, and welding of aluminum. No welding of lead occurs. Welding outside of the glovebox line is also done under this P/S code. Waste generated under P/S code WE includes hand tools, spent welding rods, stainless steel capsules, rags, and glovebox maintenance items.

Other P/S codes included in the Ongoing Metal Operations are covered below; however, no written procedures were found for them, and descriptions are based solely on SME information.

3.5.2.9 P/S Code DA: Alloy Development

This process was for the development of plutonium alloys (MET-55/TWCP-3541). Pu metal was placed in metal cups onto which the alloying metal was coated on the cup walls. The alloys were melted in the metal cups. The melt was allowed to cool. Observations were made on the success of the alloying process. If the alloy reacted with the cup, it was sent to aqueous recovery. If not, it could either be sent back to casting (P/S code CA) or possibly to electrorefining (P/S code ER or SS), depending on the circumstances. Bromobenzene was used for density measurements. Freon TF was used to clean parts prior to 1992; accordingly, EPA HWN F002 was assigned to cellulosic, rubber, and plastic debris from this process during that time period. No RCRA-listed metals were used to produce the alloys. Outputs of P/S code DA would go to P/S codes CA, SS (ER, prior to SS), or aqueous recovery. Waste would include rags, gloves, metal cups, and other general glovebox maintenance items.

3.5.2.10 P/S Code DOP: Detector Oxide Preparation

This operation involved preparation of radionuclide detector packages. The process ended operations in 1993, and the two gloveboxes involved have been inactive since that time. However, TA-55 personnel are planning to clean out those

gloveboxes so that new operations can be carried out in them. AK information in this report will still be applicable to the decommissioning waste, but will be generated in 2001. A small amount of lead sheet was used for shielding (TWCP-5167); therefore, EPA HWN D008 applies to waste generated under this P/S code. No RCRA-listed chemicals were used in this operation, although leaded gloves were probably discarded under this P/S code (MET-71, MET-72/TWCP-3541).

3.5.2.11 P/S Code DT: John Ward R&D

This P/S code was used in a nonprocessing area, and only generated routine TRU glovebox waste.

3.5.2.12 P/S Code EM: Electron Microscopy.

No written procedures were found for this process, and the SMEs associated with the process have either retired or left the laboratory.

3.5.2.13 P/S Code HG: Plutonium Removal by Mercury

Only "cold" work was done under this P/S code so no TRU waste would be generated from it (MET-62/TWCP-3541).

3.5.2.14 P/S Code IN: Inspection

This code applies to the physical inspection of parts for dimensionality (MET-69/TWCP-3541), which only generates routine glove box maintenance waste items.

3.5.2.15 P/S Code ITF, ITF4, and ITF7: Impact Test Facility

ITF4 is an old designation for P/S code ITF. There is a 7-inch gas gun (ITF7) and a 40-mm powder gun (ITF4) used in this test facility (MET-58/TWCP-3541). The 7-inch gun is used for Pu-238 experiments, such as heat source impact testing and impact testing of Pu-238 capsules in graphite blocks. No explosives are used in this process. The entire test is conducted in a tube so that the material is contained. The entire tube with contents is transferred back to Nuclear Material Technology (NMT)-9 for recovery elsewhere in Building PF-4. No TRU waste is generated from the 7-inch gun experiments.

The 40-mm gun enables the experimenter to generate data on materials in high stress environments. During the test, a projectile propelled to hyper-velocity by a charge of smokeless powder, strikes an instrumented target contained within a glovebox. The target is shattered into macro and microscopic pieces during the impact and the projectile is arrested by a series of stopping plates. Target materials can range from surrogate materials to actinides. Post test, the remains of the target material, projectile, instrumentation, and stopping plates are removed as waste or reused. Materials are segregated to minimize generation of mixed wastes and to recover actinides for reuse. The barrel, breech and other operating parts are cleaned using rags and GoJo cleaner. Since the launcher is contained within a glovebox, materials removed are possibly contaminated with actinides. MET-70/TWCP-3541 has a more complete description of the process and of the wastes generated.

Wastes generated from this operation include rags, metals, wire, HEPA filters, and gloves. GoJo cleaner is a high-purity kerosene derivative.

3.5.2.16 P/S Code JA: Gas Isostatic Press

This process is similar to P/S code BA except that it takes place in a glovebox, samples are not heated, and air is the medium used to pressurize the press instead of hydraulic oil (MET-64, MET-69 [both in TWCP-3541]). No RCRA-listed chemicals were used in this process. Only rags and glovebox maintenance items were generated. This process was active from 1979 to 1997 or 1998.

3.5.2.17 P/S Code PE: Sputtering Process

From 1982 to 1990, this process sputtered various metals onto plutonium and vice versa (MET-54/TWCP-3541). The only RCRA-listed metal used was arsenic (EPA HWN D004) for a short duration in 1984 to 1985. Other metals recalled by the SME were gold and lutetium. No solvents were used in this process.

3.5.2.18 P/S Code PF: Plutonium Surfaces

Starting in 1983 and continuing to the present, various physical and spectroscopic methods are used to characterize plutonium surfaces (MET-64/TWCP-3541). Freon TF and

SF2I are used outside the glovebox line as cutting fluids. An alcohol is used, but the SME could not recall which type.

3.5.2.19 P/S Code RL: Radiochemical Coating

Based on SME input, this process is similar to P/S code PE (MET-65/TWCP-3541). Metals were coated onto plutonium. Metals used by this SME were gold and lutetium. No solvents were used.

3.5.2.20 P/S Code UA: Uranium Fabrication

Two activities are covered by this P/S code—pit disassembly and detector fabrication (MET-69/ TWCP-3541). Uranium shells removed during pit disassembly are accounted for under P/S code UA. Plutonium operations that are identical during pit disassembly to the uranium operation are covered under P/S codes IN, MW and SRL. Detector packages using uranium-233 were fabricated under P/S code UA, generating the same types of wastes as were generated by detector package fabrication under P/S code WE. This P/S code may contain leaded gloves; however, no lead chemicals were used. P/S code UA generates the same wastes as do P/S codes IN, MW and SRL.

3.5.2.21 P/S Code VD: Vapor Degreaser & Sand Blasting

Sand blasting is a "cold" operation. The vapor degreaser operation cleans parts in an ultrasonic bath using Freon TF (MET-69/TWCP-3541). The operation accepts parts from P/S codes CA, PE, and PF. The parts are placed in the ultrasonic bath, cleaned, and allowed to air dry. Over time, the Freon TF evaporates from the bath. Wastes include rags and general glovebox maintenance items.

3.5.3 Developmental Metal Operations

3.5.3.1 P/S Code ARI: ARIES

The Advanced Recovery and Integrated Extraction System (ARIES) is a demonstration process which receives and disassembles pits, plutonium hydrides and metallic plutonium, from which it produces Pu metal or oxide powder (MET-49/TWCP-3541). The product is canned for long-term storage. Wastes include plutonium-contaminated debris waste. Wastes also come from the electrolytic decontamination module. No RCRA-regulated waste is produced.

Operation of the ARIES Electrolytic Can Decontamination System (MET-50/TWCP-3541) decontaminates the external surfaces of canned plutonium using an electrolytic decontamination system. An electrolyte (initially sodium nitrate, now sodium sulfate) and water are used in the system in a recycle mode. Sodium hydroxide is used for pH control. Wastes include electrolyte and water solutions contaminated with plutonium. There is the potential for chromium (D007) to be present in the electrolyte solution waste when this solution has been used to decontaminate stainless steel. Although no disposal path is mentioned in the reference, it is assumed that this liquid waste is sent either to cement fixation (P/S code CF) or to the RLWTF at TA-50.

Other P/S codes included in the Developmental Metal Operations group but for which no procedures were found during this AK search are listed below. SME input provided information on these P/S codes.

3.5.3.2 P/S Code AO: Assembly Operations

Operations in P/S code AO involve bringing nuclear material out of the glovebox and encapsulating it in a cold container (MET-69, MET-74/TWCP-3541). This outer container can be a bolted assembly or a welded assembly using electron beam, pressurized inert-gas metal arc (PIGMA), tungsten inert gas (TIG), or laser welding techniques. No solvents are used. Wastes include aluminum foil, plastic bags, and gloves. This waste is nearly always LLW.

3.5.3.3 P/S Code BT: Burst Testing

Hemi-shells are placed on a test stand and a buffered test solution is pumped into the shell and pressurized until it bursts (MET-58/TWCP-3541). Strain gauges monitor the deformation of the shell. The test solution is sodium tetraborate and sodium hydroxide and is filtered and reused. The solution is eventually discarded in the caustic waste line to the RLWTF at TA-50.

Wastes include rags. HEPA filters, gloves, electric lead wires, and strain gauges. Strain gauges have electrical contact points that are tin-lead solder. Metal waste from this P/S code would, therefore, carry EPA HWN D008. No solvents are used.

3.5.3.4 P/S Code ELW: Experimental Laser Welding

Laser welding and brazing is performed at TA-55 on a variety of materials, ranging from stainless steel to SNM materials (MET-60/TWCP-3541). It is performed in one of three high-purity argon gloveboxes located in PF-4. A 1-kW, pulsed Neodynium:Yttrium Alumina Garnet (Nd:YAG) laser energy beam is delivered into the glovebox environment through an optical fiber. Computerized numerical control motion systems and rotary motion systems manipulate the relative position of the laser with respect to a weld joint. Laser melting and subsequent solidification is used to join the components being fabricated. No RCRA constituents are used in this process.

3.5.3.5 P/S Code EVAC: Evacuation and Bake Out

Only LLW is generated under this P/S code (MET-69, MET-74/TWCP-3541).

3.5.3.6 P/S Code FSPF: Special Furnace Operations

This process involves heating samples in a controlled environment (MET-57, MET-64/TWCP-3541). The furnace is controlled by a computer, and is capable of being evacuated by a cryo-pump during the heating. There is a neutron detector that can be used during heating. The furnace is large enough to do full-size tests, and can also be used to heat-treat samples. Although no chemicals are used, waste is created by compatibility and weld testing, mostly in the form of contaminated scrap metals, ceramics, glass, and plastic.

3.5.3.7 P/S Code KBTF: Kolsky Bar Test Facility

The KBTF is a gas gun operation for physical property testing (MET-58/TWCP-3541). A stainless steel bar with plastic seals at each end is fired by gas pressure down a stainless steel barrel that strikes a target, usually plutonium. Behind the target is another stainless steel bar instrumented with sensors. This bar is butted against a plastic wrapped lead brick at the back of the chamber. The facility started operation in December 1997 and has had 40 shots fired thus far.

Wastes include rags, HEPA filters, and gloves. The rags may contain some lead/lead oxide from cleaning operations; hence, wastes from this operation are assigned EPA HWN

D008. The barrel is cleaned with a cotton swab. No solvents are used.

3.5.3.8 P/S Code MBC: Crystal

This process studied the work hardening of plutonium (MET-63/ TWCP-3541). Plutonium metal samples were placed in a Carver press and subjected to high pressure. The Carver press developed a leak and was discarded. No RCRA-listed constituents were used in this operation. Rags and routine glovebox maintenance items are typical wastes generated under this P/S code.

3.5.3.9 P/S Code PIG: Welding

This operation uses aluminum to weld beryllium (MET-61/ TWCP-3541). No other metals have been used. Ethanol is the only chemical used in this operation.

3.5.3.10 P/S Code RAP and RAP2: Research Alloy Preparation

No activity has occurred in these P/S codes (MET-64/ TWCP-3541).

3.5.3.11 P/S Code TIGR: Thermally Induced Gallium Removal

The process involves passing argon—6 percent hydrogen gas—over PuO_2-Ga_2O_3 powder at 600 °C to 1200 °C to produce Ga_2O and H_2O. Ga_2O is evolved from the powder and condenses on a cold spiral condenser downstream. The Ga_2O is eventually converted to Ga_2O_3 upon exposure to the glovebox atmosphere (MET-56/TWCP-3541). No RCRA constituents are used in this process.

3.5.3.12 P/S Code WLT: Welding Leak Test

This operation performs the leak detection of containers back-filled with gas to allow storage of plutonium metal in gloveboxes without reaction with atmospheric contaminants (MET-74/TWCP-3541). No solvents are used. Because items under P/S code WLT are in the glovebox line, they become TRU waste when discarded. These items consist of plastic rags and bags, cotton gloves, and a minimal quantity of metal including Swagelok fittings.

3.6 Material Inputs to the Waste Generation Processes

Attachment 4 lists P/S codes for metal operation processes at TA-55, including process descriptions, feed material, other process inputs, process outputs, and type of waste. The feed materials for metal operation processes consist of the general types of materials listed in Table 1 that are obtained from the storage vault, as process output from other P/S codes, or from sources outside TA-55, including other DOE sites.

The remainder of this section summarizes the nature of the process waste in terms of its physical, chemical and radioisotopic characteristics.

Table 1. Process Feed Materials for Metal Operation Processes

Feed Material	Potential Presence of RCRA-Regulated Substances	P/S Codes in Metal Operation Processes
Disassembled weapons components (pit disassembly)	High-purity Pu and U material types	ARI, CA, PH, SRL
Pu metal or metal alloys	High purity, no RCRA-regulated substances, unless noted otherwise	AO, ARI, BC, BT, CA, DA, ELW, EVAC, FSPF, ITF, ITF4, ITF7, JA, KBTF, MA, MBC, MW, PCH (variable purity), PD, PE, PF, PH, RL, SRL, VD, WE, WLT
Pu and other radionuclides, as oxides	High purity, no RCRA-regulated substances	DOP
Reactor fuel pellets	High purity Pu and U material types, no RCRA-regulated substances	FF, MOX, OB

3.6.1 Physical Waste Form Identification

Waste from metal operation processes primarily consists of debris waste, including cellulosic materials, plastics, rubber, metal debris, glass debris, and graphite. Some waste is immobilized in cement and discarded under P/S codes CF or HP (discussed in TWCP-AK-2.1-005). Process waste from reactor fuel development processes include tungsten carbide and hardened steel press dies, diamond or aluminum oxide grinding wheels, HEPA filters, rubber, wood, paper, rags, cardboard, glass vials, balances, steel and brass storage containers, ceramic, graphite, and magnesium oxide crucibles, vacuum pumps, graphite and molybdenum trays, thermocouples, non-leaded gloves, and stainless and hardened steel balls. Process waste from other metal operations include rags, graphite, gloves (leaded and non-leaded), steel storage containers,

graphite and tantalum crucibles, HEPA filters, paper, cardboard, strain gauges, plastic items, and scrap stainless steel.

Leaded gloves are also generated as process waste. Prior to 1987, leaded gloves were discarded in the combustible and non-combustible debris waste streams. Between 1987 and May 1992, leaded gloves were segregated from combustible debris and discarded in the metal debris waste stream because of concern that explosive lead oxides might form if the combustible debris waste were incinerated. Since May 1992, leaded gloves have been routinely segregated from other metal debris waste and assigned to a separate leaded-glove waste stream.

Because items from several different processes are usually combined into individual waste drums, the physical waste form of each drum must be determined independently. This information is documented on a Waste Origination and Disposition Form (WODF) by the waste generator according to controlled procedures. The P/S code for each waste item is also documented on this form. In the packaging process, a standard form, the Discardable Waste Log Sheet (DWLS), was used to list each item ID number and record its matrix material. This form was signed by the waste packager, then reviewed and approved by quality assurance (QA) personnel.

3.6.2 Radionuclide Content Identification

The primary plutonium material type inputs for metal operation processes at TA-55 are listed in Table 2. The designation *material type* (MT) (e.g., MT 52) is used within the DOE Complex to describe the isotopic composition of common blends of radioactive materials used within the Complex. The MT notation was developed because it is a convenient way to describe MTs that have very consistent isotopic compositions. Table 2 indicates the isotopic composition of the MTs at the time the waste was characterized.

The MT provides the basis for estimating an upper bound for U-234, U-235, and Am-241 contents based on the rate of decay of their precursors, Pu-238, Pu-239 and Pu-241, respectively. These bounding calculations provide a basis for identifying enrichment or depletion of one radionuclide verus another based on radioassays of individual waste containers. The results of these calculations are also tabulated in Table 2. The calculations assume that (a) none of these isotopes were initially present in the material, (b) the oldest Pu material in inventory dates back to 1 January 1960, and (c) the waste was packaged on 1 January 1996, making it 36 years old at that time (TWCP-698).

The primary uranium MT inputs for reactor fuel development activities and for pit disassembly at TA-55 are listed in Table 3.

Table 2. Average Isotopic Content of Plutonium Material Types and Enrichments

Material Type (MT)	Pu Isotope (Wt.%) and Half-Life						Upper Bounds for Dimensionless Weight Ratios[a]		
	Pu-238 (87.74 yr)	Pu-239 (24120 yr)	Pu-240 (6564 yr)	Pu-241 (14.35 yr)	Pu-242 (376,300 yr)	Pu-244 (8.26 x 10^7 yr)	U-234/ Total Pu	U-235/ Total Pu	Am-241/ Total Pu
MT 51	0.006	96.77	3.13	0.076	0.018	—	1×10^{-5}	0.001	0.0006
MT 52	0.01	93.78	6	0.2	0.02	—	2×10^{-5}	0.001	0.002
MT 53	0.03	91.08	8.45	0.366	0.071	—	7×10^{-5}	0.0009	0.003
MT 54	0.046	87.42	11.5	0.81	0.22	—	0.0001	0.0009	0.007
MT 55	0.06	83.88	14.73	1.03	0.304	—	0.0002	0.0009	0.009
MT 56	0.061	81.9	16.51	1.18	0.355	—	0.0002	0.0009	0.01
MT 57	0.433	74.63	20.7	2.55	1.69	—	0.001	0.0008	0.02
MT 42									
84%	1.02	1.37	10.32	3.13	84.14	0.02	0.003	1×10^{-5}	0.03
90%	0.72	1.26	6.4	1.86	89.77	—	0.002	1×10^{-5}	0.02
95%	0.45	0.56	2.47	0.906	95.58	0.029	0.001	6×10^{-6}	0.008
MT 83									
83%	83.89	13.8	1.9	0.32	0.09	—	0.26	0.0002	0.003
89%	89.26	10.07	0.633	0.021	0.015	—	0.28	0.0001	0.0002

[a] These ratios are calculated under the assumption that no chemical fractionation occurs and, hence, are intended to be used to identify fractionation when it is present by comparing these upper bounds to radioassay data.

SOURCE: TWCP-698

Table 3. Average Isotopic Content of Uranium Material Types and Enrichments (Wt.%)

Material Type	U-234	U-235	U-236	U-238
MT 12	0.0015	0.23	0.008	99.77
MT 35	0.36	37.6	0.14	61.9
MT 36	0.63	62.44	0.18	36.75
MT 38	1.03	93.04	0.41	5.53
MT 39	1.32	97.52	0.17	0.99

SOURCE: TWCP-698

Metal operation processes primarily receive feed material from other P/S codes, particularly P/S code SS (*Process Acceptable Knowledge Report for Pyrochemical Processes at TA-55* [TWCP-AK-2.1-006]) and RM (*Process Acceptable Knowledge Report for Special Processing at TA-55* [TWCP-AK-2.1-007]), and are not expected to alter the isotopic ratios of the feed material. The MT used in the process generating each waste item was documented on the WODF and DWLS. Many P/S codes processed feed material in which radionuclides other than plutonium were present in significant levels (Attachment 4):

- Depleted or enriched uranium metal or oxides were the process feed materials for P/S codes CN, FF, GI, MW, OB, PD, RS, SRL, and UA. Of these codes, FF, PD, and SRL are still active.

- P/S code WE worked with radionuclides used as sources from 1978 to the present (Am-241, Am-243, Ce-144, Cm-244, depleted uranium, Pa-231, Np-237, Th-232, Th-232 enriched in Th-230) (TWCP-882).

- P/S codes BC and JA worked with Am-243 (1992 to present), depleted uranium (1990 to present), Np-237 (1983 to present), Pa-231 (1989), and Th-232 enriched in Th-230 (1994 to present). (P/S code JA ended in 1997 or 1998; BC is still active.)

- P/S code DOP worked with Am, Ce-144, Cm-244, Np-237, Th-232, U-233. Cm-244 was introduced in P/S code DOP starting in 1988, but could also show up after that date in P/S codes IS, WE, CA and CF (TWCP-5165).

- P/S code BA worked with various radionuclides (unspecified).

- P/S code PI worked with U, Np, and Am isotopes (TWCP-5166).

In some cases, SME information has identified several P/S codes in which secondary radionuclides are expected to be present in process wastes, in addition to the cases listed above (TWCP-698):

- Some of the process wastes from P/S codes CA and MA contain Am-241, Am-243 and Np-237 during the period 1984 to 1990.

- Some of the process wastes from P/S code PH contains Am-243 (1993 to present).

Np-237, the decay product of Am-241 (half-life, 458 yr), is expected to be present mostly in minor amounts in nearly all debris waste from metal operation processes at TA-55, with the exceptions as noted above.

Cs-137 and Pa-231 could be present in trace amounts due to their widespread presence as contaminants in TA-55 operations (TWCP-5164, TWCP-5165).

In general, uranium and its isotopes are expected to be present only at trace levels, if at all, if the feed material did not purposefully contain uranium. If the waste generator indicates that only plutonium is present in the feed material, then U-236 and U-238 are not expected to be present in measurable concentrations. U-235 ingrowth from the decay of Pu-239 (half-life, 24,120 years) would be negligible due to the long half-life of Pu-239. On the other hand, U-234 would be present in MT 83 (and to a lesser extent in other plutonium material types) as a decay product of Pu-238 (half-life, 87.74 years) (Table 2). After 20 years, 14.6 percent of the initial Pu-238 would have decayed to U-234. For MT 83 with an initial content of 83.89 percent Pu-238, the atomic ratio U-234 to total plutonium would be about 0.14. After 36 years, this ratio would increase to 0.26.

During TWCP characterization, the contents of each waste package undergo non-destructive analysis to provide detailed radioisotopic data. These data will be used to evaluate the accuracy of AK information in accordance with *Waste Characterization Data Reconciliation with Acceptable Knowledge* (TWCP-DTP-1.2-064). If warranted, this AK report will be updated to incorporate the results of these comparisons.

3.6.3 Chemical Content Identification

Chemical inputs to metal operation processes are listed in Table 4.

4.0 ASSIGNMENT OF EPA HAZARDOUS WASTE NUMBERS

The assignment of EPA HWNs to process wastes from metal operations is summarized below, as well as on the process timelines in Attachment 3, and the table of process inputs and outputs in Attachment 4. These assignments are based on the possible presence of RCRA chemicals in process waste as a result of their suspected or known presence in feed materials, chemical inputs, equipment, and glovebox surfaces.

4.1 F, K, and P Listings

The following F listings only apply to cellulosic, ceramic, plastic, and rubber items. The F listings do not apply to glass or metal debris, even if these items were in contact with the F-listed chemicals, because their non-porous surfaces do not absorb liquids or gases.

Table 4. Chemical Inputs to Processes Described in This Report

Chemical Input	P/S Codes in which RCRA-Listed Chemical Is Used	Comments on Applicability of RCRA HWNs (if any)
Gases		
Argon Carbon dioxide gas Hexafluoroethane gas Hydrogen Oxygen Perfluoropropane gas Tetrafluoromethane gas		
Bases		
Potassium hydroxide Sodium hydroxide	NA	D002 (strong base) does not apply because there are no free liquids in the solid wastes from these processes.
Inorganic Chemicals		
Graphite		
Magnesium perchlorate	FF	D001 (oxidizer) does not apply to P/S code FF (TWCP-5158).
Silicone lubricant		
Sodium nitrate		
Sodium sulfate		
Sodium tetraborate		
Uranium nitride, depleted	FF	D003 does not apply in this case. Although uranium nitride is pyrophoric, its disposal in an oxidizing environment eliminates this characteristic because it is converted to uranium oxide
Uranium oxide, depleted		
Zinc stearate		
Zirconium carbide		
Metals		
Arsenic metal	PE	D004 applies to P/S code PE; used between 1984 to 1985
Copper wool		
Gallium		
Gold metal		
Lead metal	DOP, KBTF	D008 applies to P/S codes DOP and KBTF
Lutetium metal		
Nickel powder, Nickel ribblets		
Niobium + 1% zirconium metal (as sheet)		
Platinum		
Sodium metal	EL	D003 does not apply because excess Na is dissolved in Dowanol 80
Stainless steel	WE	D007 does not apply. No potential to leach chromium because stainless steel is not exposed to strong acids in P/S code WE
Tin-lead solder	BT	D008 applies to metal waste generated under P/S code BT
Titanium		
Uranium metal powder, depleted		
Vanadium metal		

Chemical Input	P/S Codes in which RCRA-Listed Chemical Is Used	Comments on Applicability of RCRA HWNs (if any)
Organic Chemicals		
3-in-1 Household Oil		
Acetone	FF, MOX	F003 does not apply because acetone was only used outside the glovebox and hence is not in the TRU process waste
Bromobenzene		D001 does not apply because there are no free liquids in solid waste
Chloroform	FF	D022 does not apply to P/S code FF because sintering removed the residual chloroform.
Dow Corning 2000 Oil		
Dowanol 80 (long-chain alcohol)		
Ethanol		D001 does not apply to ethanol; no free liquids in this waste
Ethylene glycol		
Fantastic		
Freon TF	CA, DA, MA, MW, PD, PF, SRL, UA, VD, WE	F002 applies to P/S code DA.. In P/S codes MA and PF, F002 does not apply because Freon TF is used as a coolant for cutting saws. In other P/S codes, Freon TF is used as a solvent to clean metal parts, but the parts are routinely air-dried to avoid the need for cellulosic wipes, and F002 does not apply.
Fomblin pump oil (contains perfluoropolyether)		
GoJo cleaner (kerosene derivative)		
Hexane		D001 does not apply; no free liquids in this waste
Isopropanol		D001 does not apply; no free liquids in this waste
Metalprep 79 (phosphoric acid-based metal cleaner)		
Methanol		F003 does not apply because methanol is only used outside glovebox.
Methyl ethyl ketone	MA	F005 and D035 apply to P/S code MA
MolyKote		
Nuetracleaner #1		
Nuetracleaner #2		
Polyethylene glycol		
SF-2I (as coolant)		
Stearic acid		
Sugar		
Surfactants		
Tap Magic (contains 1,1,1 trichloroethane)	MA	F002 does not apply because Tap Magic is used as a metal cutting fluid or coolant, not as a solvent. Its use was discontinued in 1992.
Tetrachloroethane		No codes apply. Although tetrachloroethane is listed on the chemical inventory for metal operations, it was never used in glovebox operations
Texaco Regal 32 oil (cutting oil)		

Chemical Input	P/S Codes in which RCRA-Listed Chemical Is Used	Comments on Applicability of RCRA HWNs (if any)
Trichloroethylene	EL, FF, MA	D040 applies to P/S codes EL, FF, and MA. F001 applies to P/S code MA, in which trichloroethylene was used as a degreaser during final cleaning of metal parts from 1979 to 1992, resuming again in February 2000. No F codes apply to EL or FF, in which trichloro-ethylene was used as a lubricant for a cutting saw, not as a solvent or degreaser.
Vactra Oil		
Windex		

- F001 applies to wastes generated under P/S code MA due to the use to trichloroethylene as a degreaser until 1992, resuming again in February 2000.
- F002 applies to wastes generated under P/S code DA because Freon TF was occasionally used in this process, and to P/S code MA from 1995 to the present.
- F005 applies to waste generated under P/S code MA due to the use of methyl ethyl ketone from 1979 through 1984.

K or P listings do not apply to solid wastes generated from any of the metal operation processes because no K-listed or P-listed chemicals were present in the feed materials, chemicals or equipment used in these processes.

4.2 Toxicity Listings

D001 (ignitable), D002 (corrosive), or D003 (reactive) listings do not apply to the solid wastes from metal operation processes because no ignitable chemicals were used in these processes and because the solid wastes do not contain any free liquids (see Section 5.0). Although the strong oxidizer magnesium perchlorate was used as a water getter in P/S code FF, the used salts were sent to cement fixation (TWCP-5158).

D004 applies to P/S code PE, in which arsenic was used in 1984 and perhaps into 1985 (MET-54/TWCP-3541).

D007 applies to P/S code PCH and ARI after 1996.

D008 applies to metal debris from P/S codes codes BA, BC, CA, DA, DOP, IN, JA, MA, MW, PCH, PE, PF, PH, RL, UA, VD, and WE until May 1992, when leaded gloves began to be routinely segregated from other metal debris waste (TWCP-4166). Prior to 1987, leaded gloves were not segregated from combustible debris. Between 1987 and May 1992, leaded gloves were segregated and discarded in the metal debris waste stream. Since May 1992, leaded gloves

have been routinely segregated and assigned to a leaded-glove waste stream, still under the originating P/S code (TWCP-4166).

D008 applies to metal waste generated under P/S code BT due to the use of tin-lead solder connections on the strain gauges used in this series of experiments (MET-58/TWCP-3541).

D008 applies to P/S code KBTF, in which a plastic-wrapped lead brick is used as a damper at the rear end of the test chamber (MET-58/TWCP-3541). Waste could potentially be contaminated with lead or lead oxide during clean-up operations in the test chamber.

D008 applies to P/S code DOP due to the use of lead sheet for shielding (TWCP-5167).

D035 applies to P/S code MA due to the use of methyl ethyl ketone from 1979 through 1984.

D040 applies to P/S codes EL and FF due to the use of trichloroethylene as a lubricant in an Isomet cut-off saw (MET-59/TWCP-3541).

D040 applies to P/S code MA due to the use of trichloroethylene in the final cleaning of metal parts from 1979 to 1992, resuming again in February 2000.

5.0 VERIFICATION THAT IGNITABLE, REACTIVE, AND CORROSIVE WASTES WERE EXCLUDED

According to the WIPP WAP, "The prohibition of liquids and containerized gases prevents the shipment of corrosive, ignitable, or reactive wastes." Administrative controls on waste packaging were in place at various times to ensure the absence of such items from the waste stream.

- Liquids were prohibited from solid waste streams at TA-55 when the facility opened in January 1978. A waste management procedure written to cover operations at the new facility, *TA-55 Standard Operating Procedure (SOP) 406-GEN-R00*, stated that "Liquids are not permitted in any container of solid waste materials" (TWCP-3943).

- Chemical Waste Disposal Requests introduced in June 1980 included checkboxes that the waste generator was required to check if the waste contained corrosive acids or bases, or pyrophoric, flammable, corrosive, explosive, toxic, carcinogenic or highly reactive materials.

- The Certification Plan (TWCP-697) and related Generator Attachments (TWCP-701) were implemented in 1987. Waste generators were required to sign a statement on the WODF documenting that the waste contained "no free liquids, pyrophorics, explosives, compressed gases, powders or materials other than the indicated matrix."

Checkboxes were also present for indicating the presence or absence of corrosive chemicals. Full implementation of this generator statement occurred in May 1987.

- Waste management inspectors perform visual verification of the waste prior to its initial packaging, thus allowing the inspectors to verify the generator's WODF statement (TWCP-701, sections 3.8.5 to 3.8.6).

- In addition to the above-mentioned prohibitions on explosives in wastes, explosives were prohibited from TA-55 until installation of the Impact Test Facility in the early 1990s. Explosives continue to be banned in the solid waste streams up to the present time. If a misfire should occur, the requirement is to destroy the unspent powder by burning (TWCP-4720).

- The Waste Profile Request Form (WPRF), in use at LANL since 1991, includes a statement that must be authenticated by the waste generator, that the waste is not ignitable (flash point >200°F), reactive, or corrosive.

- The TA-55 Generator Attachments to the Certification Plan were updated in 1995 (TWCP-700) re-emphasizing the prohibition on liquids in the waste, and the continuation of waste management inspection, remained in effect.

Hence, since the inception of operations at TA-55, corrosive and reactive wastes have been excluded from TA-55 solid wastes through the prohibition of liquids.

The absence of these prohibited items is verified through radiography of each waste container and visual examination of selected containers during TWCP characterization activities. These data are used to assess the accuracy of AK information in accordance with *Reconciliation of Visual Examination and Radiography Information* (TWCP-QP-1.1-028). Any free liquids are remediated, or the container is tagged as non-compliant by filing a Prohibited Waste Report in accordance with *Nonconformance Reporting and Tracking* (TWCP-QP-1.1-007).

6.0 VERIFICATION THAT INCOMPATIBLE CHEMICALS WERE PROHIBITED

Section 5.0 summarizes administrative controls in place at TA-55 that prohibit incompatible chemicals in the waste, and measures taken to verify their absence. In addition, all waste containers shipped from TA-55 to TA-54 for storage were evaluated for potentially incompatible chemicals in accordance with 49 *Code of Federal Regulations* (CFR) Subpart C—Segregation and separation chart of hazardous materials; Section 177.848, Segregation of hazardous materials, and were determined to be in compliance with this requirement.

7.0 VERIFICATION THAT THERE ARE NO COMPRESSED GASES, FREE LIQUIDS, NONRADIONUCLIDE PYROPHORICS, SEALED CONTAINERS GREATER THAN FOUR LITERS IN VOLUME, OR >1% RADIONUCLIDE PYROPHORICS

Most gases used at the TA-55 Plutonium Facility are stored outside the building and the gas is plumbed into the glovebox from outside the building (TWCP-4164). Occasionally, a lecture bottle may have been used for a process inside the building, but these bottles were kept outside of the glovebox with the gas plumbed into the glovebox. Consequently, compressed gas cylinders or containers are not expected to be in any of the TRU wastes generated by TA-55 operations.

Spray cans, especially WD-40, were in common use in TA-55 gloveboxes until May 1992 (TWCP-4166) and were routinely discarded as metal debris waste. From 1988 until May 1992, the protocol was to vent or puncture the spray cans inside the glovebox; venting was indicated by inserting a metal wire into the valve. After May 1992, spray cans were no longer used in gloveboxes.

For items of pyrochemical salt waste, the procedures of oxygen sparging and/or carbonate oxidation have been used since May 1987 to ensure that pyrophorics were oxidized. In addition, screening tests on similar pyrochemical salts and residues (which contain higher amounts of plutonium) at the Rocky Flats Environmental Technology Site (TWCP-2501) have shown (1) no autoignition, (2) no spontaneous combustion, and (3) no sparking. Experimental results on the reactivity of LANL Direct Oxide Reduction (DOR) salt with water and the reactivity in air of heated calcium metal nodules from DOR salts indicate the absence of "dangerous when wet materials" and pyrophoricity in these salts (TWCP-3730, TWCP-3731, TWCP-3732).

Verification that individual waste drums do not contain compressed gases, free liquids, or sealed containers greater than 4 L in volume is obtained from radiography of each waste container and visual examination of selected containers during TWCP characterization activities. Any free liquids are remediated, and any sealed containers greater than 4 L in volume, or unpunctured or unvented gas containers, are removed, or the waste container is tagged as non-compliant by filing a Prohibited Waste Report in accordance with *Nonconformance Reporting and Tracking* (TWCP-QP-1.1-007). For administrative controls on the prohibition of pyrophorics, see sections 5.0 and 6.0.

8.0 VERIFICATION THAT THERE ARE NO POLYCHLORINATED BIPHENYLS (PCBs) IN THE WASTE STREAM

No PCBs were introduced into the metal operation processes, based on documentation in TA-55 procedures reviewed during the AK investigation and summarized in the process inputs listed in Table 1, Table 4, and Attachment 4. Oils used in the reviewed processes include vacuum pump oils, and cutting fluids used for cooling purposes; none of these oils are known to contain PCBs. All transformers known to contain PCBs have been tracked from the time of startup of TA-55 in 1978. Whenever any transformer oil is

drained, it is handled by a subcontractor who is wholly responsible for its disposal (*Process Acceptable Knowledge Report for Nitrate Operations at TA-55* [TWCP-AK-2.1-005, R.2, section 8.0]); this oil does not enter the LANL disposal operations.

9.0 CITED PROCEDURES AND REQUIREMENTS DOCUMENTS

- 40 CFR Part 261, Subpart C—Characteristics of hazardous waste, Sections 261.21 (*Characteristic of ignitability*), 261.22 (*Characteristic of corrosivity*), 261.23 (*Characteristic of reactivity*), and 261.24 (*Toxicity characteristic*)
- 40 CFR Part 261, Subpart D—Lists of hazardous waste, Sections 261.31 *(Hazardous wastes from non-specific sources),* 261.32 *(Hazardous wastes from specific sources),* and 261.33 *(Discarded commercial chemical products, off-specification species, container residues, and spill residues thereof)*
- 49 CFR Subpart C—Segregation and separation chart of hazardous materials. Section 177.848, *Segregation of hazardous materials*
- *Acceptable Knowledge Documentation* (TWCP-QP-1.1-021)
- *Nonconformance Reporting and Tracking* (TWCP-QP-1.1-007)
- *Records Management* (TWCP-QP-1.1-004)
- *Reconciliation of Visual Examination and Radiography Information* (TWCP-QP-1.1-028)
- *Waste Acceptance Criteria for the Waste Isolation Pilot Plant* (DOE/WIPP-069)
- *Waste Analysis at Facilities that Generate, Treat, Store and Dispose of Hazardous Waste* (EPA/OSWER 9938.4-03)
- *Waste Analysis Plan, to the Hazardous Waste Facility Permit Issued to the Waste Isolation Pilot Plant* (EPA No. NM4890139088, Attachment B)
- *Waste Characterization Data Reconciliation with Acceptable Knowledge* (TWCP-DTP-1.2-064)

ACCEPTABLE KNOWLEDGE ROADMAP

Waste Stream: Waste from Process/Status codes ARI, BA, BC, BT, CA, CN, CO, CT, DA, DOP, DT, EL, ELW, EM, FF, FSPF, GI, HG, ID, IN, ITF, ITF4, ITF7, JA, KBTF, MA, MBC, MOX, MW, OB, OM, PCH, PD, PE, PF, PH, PIG, RAP, RAP2, RL, RS, SRL, TIGR, UA, VD, WE, WLT

Copies of these documents are in the TWCP RMDC Center. Refer to *Records Management* (TWCP-QP-1.1-004) for information on obtaining copies.

TWCP Record No.	Information Category Code	Information	Source	Summary	Limitations
TWCP-352	B	Description of Pu recovery processes	*Wastes from Plutonium Conversion and Scrap Recovery Operations,* LA-11069-MS, March 1988.	Document describes the Pu residues and the various treatment approaches used in recovering Pu from scrap	Document does not give information about RCRA constituents introduced or present in the processes
TWCP-614	D	All TA-55 waste is Defense related.	Memo from Doug Sankey.	All TA-55 waste is Defense related.	None
TWCP-697	C	Waste management requirements to meet WIPP WAC requirements were formalized in 1984.	*Los Alamos TRU Waste Certification Plan for Newly Generated TRU Waste,* WCP-HSE7-CPL-01, R.2 (November 1984)	Waste management requirements to meet WIPP WAC requirements. Generator Attachments were used to describe and reference specific generator procedures.	Overview document—Generator Attachments provide more detailed information.
TWCP-698	B	Gives Material Type compositions	NMT Memo, NMT-7 WM/EC-96-032 Benchmark Environmental Corp. Memo, AL-7193 BEC	Gives Material Type compositions	Does not give information on how material may fractionate in TA-55 waste processes.
TWCP-700	C	*Attachment 3 to the Los Alamos TRU Waste Certification Plan for Newly Generated TRU Waste,* R05	*NMT-7 Attachment, January 1995,* TRUWM-TA55-CPA-03,R00	Documents controls to meet WIPP WAC were implemented and how independent verification was accomplished.	Information is not extremely detailed.
TWCP-701	C	*TA-55 Generator Attachment* to the *TRU Waste Certification Plan for Newly Generated TRU Waste*	*TA-55 Attachment, 1987,* TRU-MST12-CPA-03,R00	Documents controls to meet WIPP WAC were implemented and how independent verification was accomplished.	Information is not extremely detailed.

* Information Category Codes: A = forms intended for use in waste certification, B = data from controlled databases and published documents, C = unpublished data, and D = interviews, memos, and letters

TWCP Record No.	Information Category Code	Information	Source	Summary	Limitations
TWCP-816	D	Jim Foxx Interview on Number of Layers of Packaging	C.L. Foxx, Los Alamos National Laboratory	Waste was co-mingled with room trash, and was initially boxed as low-level waste. Subsequently, some of these waste boxes were returned for disposal in drums as TRU waste when on-site radioassay results showed them exceeding the low-level discard limits.	None
TWCP-882 (UCNI)	D	Secondary Radionuclides and Toxic Metals in TA-55 TRU Waste	Memo from Jim Foxx	Lists additional radionuclides and metals potentially in waste, subdivided by process/status code. Covers time period from 1978 to present.	Best information available, but it is based on worker recollection because other records are not available.
TWCP-886	C	Color Flow Diagram of Pu-processes at TA-55.	N/A	Indicates that process inputs are thermally treated and that heavy metals from process inputs end up in the nitric acid evaporator bottoms.	Does not indicate solvent input to processes.
TWCP-887	D	Segregation of Defense and Non-Defense TRU Waste	Memo from Jim Foxx	Wastes generated from defense and non-defense activities were not segregated at TA-55 through 1997.	None.
TWCP-2501	B	"Backlog Waste Reassessment Baseline Book, Waste Form 34"	Rocky Flats Environmental Technology Site Report 1995	Page WF34-10 contains results of tests for corrosivity	Tests were conducted on residues rather than on waste.
MET-1/TWCP-3541 (UCNI)	C	Reactor Fuels Development	MAS-NF-DE-11-13—Potential hazards associated with metallography in Room 115	Describes metallography process involved in reactor fuel development.	None
MET-2/TWCP-3541 (UCNI)	C	Reactor Fuels Development	MAS-NF-DE-11-18—Metallographic procedure for making alpha autoradiographs	Describes procedure for making alpha autoradiographs.	None

* Information Category Codes: A = forms intended for use in waste certification, B = data from controlled databases and published documents, C = unpublished data, and D = interviews, memos, and letters

TWCP Record No.	Information Category Code	Information	Source	Summary	Limitations
MET-3/TWCP-3541 (UCNI)	C	Reactor Fuels Development	MAS-NF-DE-11-8—Metallurgical examination of Pu-contaminated materials	Describes procedure for metallurgical examination of Pu-contaminated materials.	None
MET-4/TWCP-3541 (UCNI)	C	Reactor Fuels Development	MAS-NF-DE-11-14—Identification of potential hazards associated with metallography in Rooms G104 and G107	Describes procedure for identifying hazards associated with metallography at TA-55.	None
MET-5/TWCP-3541 (UCNI)	C	Reactor Fuels Development	FAB-PP-3401—Cleaning of SP-100 fuel pin components (P/S EL)	Describes procedure for cleaning of SP-100 fuel pin components.	None
MET-6/TWCP-3541 (UCNI)	C	Reactor Fuels Development	FAB-PP-3402—Heat treatment of SP-100 components (P/S EL)	Describes process for heat treatment of SP-100 components.	None
MET-7/TWCP-3541 (UCNI)	C	Reactor Fuels Development	FAB-PP-3530—Shroud tube fuel and insulator pellet loading (P/S EL)	Describes process for shroud tube fuel and insulator pellet loading.	None
MET-8/TWCP-3541 (UCNI)	C	Reactor Fuels Development	FAB-PP-3540—Fuel element component assembly (P/S EL)	Describes process for fuel element component assembly.	None
MET-9/TWCP-3541 (UCNI)	C	Reactor Fuels Development	FAB-PP-3570—Fuel element and component examination (P/S EL)	Describes process for fuel element and component examination,.	None
MET-10/ TWCP-3541 (UCNI)	C	Reactor Fuels Development	FAB-PP-3590—Wire wrap (P/S EL)	Describes process for wire wrap.	None
MET-11/ TWCP-3541 (UCNI)	C	Reactor Fuels Development	FAB-PP-3620—Fuel and insulator pellet archive (P/S EL)	Describes process for fuel and insulator pellet archives.	None
MET-12/ TWCP-3541 (UCNI)	C	Reactor Fuels Development	FAB-PP-3630—Sampling of EBRI-II type fuel elements and wrap wires for residual chloride and fluoride (P/S EL)	Describes process for sampling of EBRI-II type fuel elements and wrap wires for residual chloride and fluoride.	None

* Information Category Codes: A = forms intended for use in waste certification, B = data from controlled databases and published documents, C = unpublished data, and D = interviews, memos, and letters

TWCP Record No.	Information Category Code	Information	Source	Summary	Limitations
MET-13/ TWCP-3541 (UCNI)	C	Reactor Fuels Development	FAB-PP-3820—Cleaning requirements for large components (P/S EL)	Describes process for cleaning and requirements for large components.	None
MET-14/ TWCP-3541 (UCNI)	C	Reactor Fuels Development	FAB-PP-3830—Cleaning for small components (P/S EL)	Describes process for cleaning of small components.	None
MET-15/ TWCP-3541 (UCNI)	C	Reactor Fuels Development	FAB-PP-3340—Sodium melting using cassette (P/S EL)	Describes process for sodium melting using cassette.	None
MET-16/ TWCP-3541 (UCNI)	C	Reactor Fuels Development	FAB-FI-3002—Fabrication and inspection of He-bonded fuel elements (P/S EL)	Describes process for fabrication and inspection of He-bonded fuel elements.	None
MET-17/ TWCP-3541 (UCNI)	C	Reactor Fuels Development	FAB-FI-3004—Fabrication and inspection of Na-bonded WSA-60 fuel pin capsules (P/S EL)	Describes process for fabrication and inspection of Na-bonded WSA-60 fuel pin capsules.	None
MET-18/ TWCP-3541 (UCNI)	C	Reactor Fuels Development	FAB-MS-2006—Material specification for 235-U	Describes process for material specification for 235-U.	QA Requirement documents
MET-19/ TWCP-3541 (UCNI)	C	Reactor Fuels Development	FAB-MS-2004—Carbothermic process material specification for U oxide powder	Describes process for carbothermic process material specification for U oxide powder.	QA Requirement documents
MET-20/ TWCP-3541 (UCNI)	C	Reactor Fuels Development	FAB-MS-2001—Carbothermic process material specification for Pu oxide powder	Describes process for carbothermic process material specification for Pu oxide powder.	QA Requirement documents
MET-21/ TWCP-3541 (UCNI)	C	Reactor Fuels Development	FAB-MS-2000—Material specification for U oxide powder, depleted	Describes process for material specification for depleted U oxide powder.	QA Requirement documents
MET-22/ TWCP-3541 (UCNI)	C	Reactor Fuels Development	FAB-PP-2011—Master blend preparation for Pu oxide powder (P/S OB and FF)	Describes process for master blend preparation for Pu oxide powder.	None

* Information Category Codes: A = forms intended for use in waste certification, B = data from controlled databases and published documents, C = unpublished data, and D = interviews, memos, and letters

TWCP Record No.	Information Category Code	Information	Source	Summary	Limitations
MET-23/ TWCP-3541 (UCNI)	C	Reactor Fuels Development	FAB-PP-2040—Vacuum reduction procedure for U carbide or U-Pu carbide preparation (P/S RS and FF)	Describes process for vacuum reduction for U carbide or U-Pu carbide preparation.	None
MET-24/ TWCP-3541 (UCNI)	C	Reactor Fuels Development	FAB-PP-2050—Comminution and Ni addition for U carbide or U-Pu carbide (P/S CO and FF)	Describes process for comminution and Ni addition for U carbide or U-Pu carbide.	None
MET-25/ TWCP-3541 (UCNI)	C	Reactor Fuels Development	FAB-PP-2060—Automatic pellet pressing (P/S MOX and FF)	Describes process for automatic pellet pressing.	None
MET-26/ TWCP-3541 (UCNI)	C	Reactor Fuels Development	FAB-PP-2070—Sintering for U or U-Pu carbide pellets (P/S MOX, RS, and FF)	Describes process for sintering for U or U-Pu carbide pellets.	None
MET-27/ TWCP-3541 (UCNI)	C	Reactor Fuels Development	FAB-PP-2080—Manual pellet pressing (P/S MOX and FF)	Describes process for manual pellet pressing.	None
MET-28/ TWCP-3541 (UCNI)	C	Reactor Fuels Development	FAB-PP-2090—Sampling sintered fuel and insulator pellets (P/S MOX, GI, and FF)	Describes process for sampling sintered fuel and insulator pellets.	None
MET-29/ TWCP-3541 (UCNI)	C	Reactor Fuels Development	FAB-PP-2100—Measuring density of sintered fuel or insulator pellets (P/S MOX, ID, GI, and FF)	Describes process for measuring density of sintered fuel or insulator pellets.	None
MET-30/ TWCP-3541 (UCNI)	C	Reactor Fuels Development	FAB-PP-2110—Physical inspection and size sorting (P/S MOX, GI, and FF)	Describes process for physical inspection and size sorting.	None
MET-31/ TWCP-3541 (UCNI)	C	Reactor Fuels Development	FAB-PP-2130—Centerless grinding (P/S MOX, GI, and FF)	Describes process for centerless grinding.	None
MET-32/ TWCP-3541 (UCNI)	C	Reactor Fuels Development	FAB-PP-2160—Binder burnout (P/S RS, MOX, and FF)	Describes process for binder burnout.	None
MET-33/ TWCP-3541 (UCNI)	C	Reactor Fuels Development	FAB-PP-3000—Cleaning requirements (P/S EL)	Describes process for cleaning requirements.	None

* Information Category Codes: A = forms intended for use in waste certification, B = data from controlled databases and published documents, C = unpublished data, and D = interviews, memos, and letters

TWCP Record No.	Information Category Code	Information	Source	Summary	Limitations
MET-34/ TWCP-3541 (UCNI)	C	Reactor Fuels Development	FAB-PP-3300—Sodium canister startup and casting (P/S EL)	Describes process for sodium canister startup and casting.	None
MET-35/ TWCP-3541 (UCNI)	C	Reactor Fuels Development	FAB-PP-3310—Sodium extrusion (P/S EL)	Describes process for sodium extrusion.	None
MET-36/ TWCP-3541 (UCNI)	C	Reactor Fuels Development	FAB-PP-3330—Sodium loading into fuel elements (P/S EL)	Describes process for sodium loading into fuel elements.	None
MET-37/ TWCP-3541 (UCNI)	C	Reactor Fuels Development	FAB-PP-3350—Sodium bonding (P/S EL)	Describes process for sodium bonding.	None
MET-38/ TWCP-3541 (UCNI)	C	Reactor Fuels Development	FAB-PP-3360—WSA capsule loading and sodium melting (P/S EL)	Describes process for WSA capsule loading and sodium melting.	None
MET-39/ TWCP-3541 (UCNI)	C	On-Going Metal Operations	353-WEL—Encapsulation of Radioactive Isotopes (P/S WE)	Describes process for encapsulation of radioactive isotopes	Vague description of process; therefore vague on chemical use
MET-40/ TWCP-3541 (UCNI)	C	On-Going Metal Operations	118-MRD—Plasma Chemical Reactor (P/S PCH)	Describes process for plasma chemical reactor operation	None
MET-41/ TWCP-3541 (UCNI)	C	On-Going Metal Operations	116-MRD -Measuring Physical Properties (P/S BC)	Describes process for measuring physical properties	Poor description of chemical use
MET-42/ TWCP-3541 (UCNI)	C	On-Going Metal Operations	397-SEC—Safe Operating Procedure for Pit Disassembly (P/S MW, MA, PD, SRL)	Describes process for safe operating procedure for pit disassembly	None
MET-43/ TWCP-3541 (UCNI)	C	On-Going Metal Operations	NMT5-SOP-3026-MRD—Plutonium Hydriding System (formerly 3026-MRD-R01) (P/S PH)	Describes process for Pu hydriding system	None
MET-44/ TWCP-3541 (UCNI)	C	On-Going Metal Operations	119-MRD—Operating the Hydride-Dehydride Systems (P/S PH)	Describes process for operating the hydride-dehydride systems	None
MET-45/ TWCP-3541 (UCNI)	C	On-Going Metal Operations	317-CAS—Button Breaking Press (P/S CA)	Describes process for button breaking press	None

* Information Category Codes: A = forms intended for use in waste certification, B = data from controlled databases and published documents, C = unpublished data, and D = interviews, memos, and letters

TWCP Record No.	Information Category Code	Information	Source	Summary	Limitations
MET-46/ TWCP-3541 (UCNI)	C	On-Going Metal Operations	321-MET—Ultrasonic Degreaser (P/S MA)	Describes process for operation of the ultrasonic degreaser	None
MET-47/ TWCP-3541 (UCNI)	C	On-Going Metal Operations	ESA-2 SOP-20.6.4—Ultrasonic Pit Inspection at TA-55 (P/S MA)	Describes process for ultrasonic pit inspection at TA-55	None, physical inspection—no chemical use
MET-48/ TWCP-3541 (UCNI)	C	On-Going Metal Operations	399-MET—Operating the Autoclave Hot Isostatic Press (P/S BA)	Describes process for operating the autoclave hot isostatic press	None
MET-49/ TWCP-3541 (UCNI)	C	Developmental Metal Operations	NMT6-AP-AR-142—ARIES Integration System (P/S ARI)	Describes process for ARIES integration system	Weak on describing chemical use
MET-50/ TWCP-3541 (UCNI)	C	Developmental Metal Operations	NMT6-SOP-AR-127—Operation of the ARIES Electrolytic Can Decontamination System (P/S ARI)	Describes process for operation of the ARIES electrolytic can decontamination system	None
MET-51/ TWCP-3541 (UCNI)	C	Developmental Metal Operations	ATP/SRL-104—Pit Disassembly (formerly 397-SRL-R04) (P/S SRL)	Describes process for pit disassembly	None
MET-52/ TWCP-3541 (UCNI)	C	Developmental Metal Operations	ATP/SRL-105—Processing Material in the Special Recovery Line Furnace (P/S SRL)	Describes process for processing material in the special recovery line furnace	None
MET-53/ TWCP-3541 (UCNI)	C	Developmental Metal Operations	397-SRL—Pit Disassembly (Special Recovery Line) (P/S SRL)	Describes process for pit disassembly (Special Recovery Line)	None
MET-54/ TWCP-3541 (UCNI)	D	Information regarding P/S code PE	Rueben Gutierrez, SME, 2/17/2000	Sputtering operations deposited Pu onto other surfaces. Other sputtering operations deposited other metals as thin films onto Pu.	No procedure existed for this process. SME recall of information about a process that occurred over a decade ago.
MET-55/ TWCP-3541 (UCNI)	D	Information regarding P/S code DA	Dale Soderquist, SME. 2/28/2000	P/S code DA was a process to study Pu alloys.	No procedure existed for this process.

* Information Category Codes: A = forms intended for use in waste certification, B = data from controlled databases and published documents, C = unpublished data, and D = interviews, memos, and letters

TWCP Record No.	Information Category Code	Information	Source	Summary	Limitations
MET-56/ TWCP-3541 (UCNI)	D	Information regarding P/S code TIGR	David Kolman, SME, 3/2/2000	Process is a dry process to remove gallium from Pu. Very little waste generated from this process.	No procedure existed for this process.
MET-57/ TWCP-3541 (UCNI)	D	Information regarding P/S code FSPF	Janice Aasen, SME, 3/7/2000	FSPF replaced P/S code DA and was set up to be like DA. Process involves heating samples in a furnace under a controlled environment.	As with P/S code DA, no procedure existed for FSPF.
MET-58/ TWCP-3541 (UCNI)	D	Information regarding P/S codes KBTF, ITF, ITF4, ITF7, and BT	Jim Foxx, SME, 3/15/2000	Jim Foxx interviewed Ben Lopez, SME for KBTF and ITF, ITF4, and ITF7. Both processes are impact tests for determining physical properties of materials.	No procedures existed for these processes.
MET-59/ TWCP-3541 (UCNI)	D	Information regarding the reactor fuels program.	Ken Chidster, Roberta Simpson, and Rudy Fernandez, SMEs, 3/7/2000, 3./13/200	Provided detailed information on reactor fuels development work. Provided information on P/S codes CN, CO, CT, EL, FF, ID, OB, OM, MOX, and RS.	Very thorough source of information
MET-60/ TWCP-3541 (UCNI)	D	Information regarding P/S code ELW	John Milewski, SME, 2/29/2000	Laser welding operation for Pu and other metals. Minimal amounts of waste generated, no RCRA-listed constituents	No procedure existed for this process
MET-61/ TWCP-3541 (UCNI)	D	Information regarding P/S code PIG	Richard Oleary, SME, 2/29/2000	Welding operation in which ethanol is the only chemical use.	No procedure existed for this process
MET-62/ TWCP-3541 (UCNI)	D	Information regarding P/S code CA, MA, PD, SRL, and HG	David Olivas, Charles Rense, SMEs, 3/2/2000	Information provided clarified issues for these P/S codes that were unclear from the limited procedures available.	Limited number of procedures available for these P/S codes, hence it was difficult to generate a clear understanding of these processes.

* Information Category Codes: A = forms intended for use in waste certification, B = data from controlled databases and published documents, C = unpublished data, and D = interviews, memos, and letters

TWCP Record No.	Information Category Code	Information	Source	Summary	Limitations
MET-63/ TWCP-3541 (UCNI)	D	Information on P/S code MBC	Mike Blau, Dane Spearing, SMEs, 3/6/2000, 3/8/2000	Information on potential RCRA-listed constituents. This operation uses none.	No process description available
MET-64/ TWCP-3541 (UCNI)	D	Information on P/S codes RAP, RAP2, FSPF, PF, and JA	Barbara Cort Martinez, SME, 2/29/2000	Reasonable information on P/S code PF obtained, but limited information on other codes. Time information good. RCRA information good.	No procedures existed for these processes. Sketchy information on P/S code JA process. Limited information on P/S code FSPF.
MET-65/ TWCP-3541 (UCNI)	D	Information on P/S code RL	Jack Simpson, SME, 2/28/2000	Process is similar to P/S code PE in that Pu metal was coated with thin film of other metals.	No procedures existed for this process. SME couldn't recall a lot of detail.
MET-66/ TWCP-3541 (UCNI)	D	Information on P/S code CA	Dale Soderquist, SME, 3/29/2000	Detailed information on casting operations.	Procedures available for casting operations provided little useful information. SME input provided the detail.
MET-67/ TWCP-3541 (UCNI)	D	Information on chemicals used in machining operations, P/S code MA.	George Zakar, SME, 3/15/2000	SME provided a list of chemicals used in machining operations.	Procedures available for machining operations were sketchy and provided little information about chemical use in machining. SME input provided a detailed list.
MET-68/ TWCP-3541 (UCNI)	D	Information regarding P/S code MA	George Zakar, SME, 3/29/2000	SME provided detailed information on machining operations that was not available from the procedures.	Procedures provided little information on process descriptions or chemicals used in machining. SME input provided required information.
MET-69/ TWCP-3541 (UCNI)	D	Information regarding P/S codes AO, EVAC, IN, JA, UA, VD, and WE	Jim Foxx, SME, 4/12/2000	SME provided information on process and wastes generated from these various P/S codes.	No procedures existed for these P/S codes.

* Information Category Codes: A = forms intended for use in waste certification, B = data from controlled databases and published documents, C = unpublished data, and D = interviews, memos, and letters

TWCP Record No.	Information Category Code	Information	Source	Summary	Limitations
MET-70/ TWCP-3541 (UCNI)		Waste Management Plan, October 14, 1999 Rev. 1, 40-MM Powder Breech Project, TA-55 Bldg. PF-4, Los Alamos National Laboratory	Jim Foxx, 3/9/2000	Information regarding P/S code ITF. Includes process description, some of the materials used.	Details on materials used is sketchy, hence input from SME was required.
MET-71/ TWCP-3541 (UCNI)	C	Procedure for Curium-244 Detector Fabrication, P/S code DOP	TA-55 Document, 308-FAB-R03	Contains materials used in the process	No RCRA analyses documents
MET-72/ TWCP-3541 (UCNI)	C	Procedure for Robotic Isotope Detector Fabrication	TA-55 Document, 3029-DET-R00	Contains materials used in the process	No RCRA analyses documents
MET-73/ TWCP-3541 (UCNI)	D	Information regarding P/S codes PPD, UA, VD, IN, WE and type of Dowanol used in P/S codes EL and FF	Jim Foxx, SME, 5/2/2000	SME provided additional information about processes, time periods, and chemical use and type	Answers to specific questions
MET-74/ TWCP-3541 (UCNI)	D	Information regarding P/S codes AO, EVAC, MA, and WLT	Jim Foxx, SME, 6/26/2000	SME provided additional information on P/S codes AO, EVAC, and WLT than was contained in MET69	Answers to specific questions
MET-75/ TWCP-3541 (UCNI)	D	Information regarding deposition of uranium used in reactor fuel development	Jim Foxx, SME, 6/27/2000	SME provided information on uranium deposition	Answers to specific questions
MET-76/ TWCP-3541 (UCNI)	D	Information on TCE use in P/S code MA	Jim Foxx, SME, 6/29/2000	SME provided information on trichloroethylene use in P/S code MA	Answers to specific questions
TWCP-3730 (UCNI)	B	Pyrophoricity characterization	Characterization of Direct Oxide Salts (LA-CP-95-0098)	Hydrogen generation and pyrophoricity of DOR salts. Also gives reference for MSE, ER, and Cr-containing salts.	None
TWCP-3731	D	Sodium pyrophoricity in pyrochemical salts	Memo (MST-12-ARO-88-052)	Treatment of sodium in salts is effective	Sodium only
TWCP-3732	C	Experimental data on calcium pyrophoricity in salts	Memo (MST-12-ARO-88-077)	Treatment of calcium in salts is effective	Calcium only

* Information Category Codes: A = forms intended for use in waste certification, B = data from controlled databases and published documents, C = unpublished data, and D = interviews, memos, and letters

TWCP Record No.	Information Category Code	Information	Source	Summary	Limitations
TWCP-3943	B	Procedure for Waste Management at TA-55	TA-55 Document, 406-GEN-R00	Contains information on waste management procedures in 1978	None, but doesn't address today's waste management concerns
TWCP-4162	D	Answers to questions about P/S codes PB, PuBe, CC, MB, MS, FF, BF, and other issues	Interview with Jim Foxx, 10/12/00	Answers to questions on use of asbestos at TA-55, non-defense activities, and specific P/S codes in chloride operations.	None
TWCP-4164	D	Answers to questions about various P/S codes	Interview with Jim Foxx, 10/16/00	Answers to questions on use of Ag, disposal of ash and resins, and use of gases.	None
TWCP-4166	D	Answers to questions about P/S codes DO, EV, HP, CF, OR, RM, PY	Interview with Jim Foxx, 10/17/00	Answers to questions on use of Cr and Ag, RCRA metals in cement, asbestos in furnaces and gloves, and disposal of spray cans used in gloveboxes.	None
TWCP-4167	D	Answers to questions about segregation of non-defense wastes; leachability of Ag from ash	Interview with Jim Foxx, 10/18/00	Segregation of non-defense wastes began on 27 August 1998; analytical data show that Ag in ash is below limits of regulatory concern	None
TWCP-4720	A	Describes the procedure to be taken at TA-55 in the event of a misfire or unconsumed explosives (from the Impact Test Facility 40-mm gun, P/S codes ITF and ITF4) to ensure that explosives do not enter the waste stream	40-mm Powder Breech Project Waste Management Plan, Rev. 2 (issued March 27, 2000)	Procedure to be taken at TA-55 in the event of a misfire or unconsumed explosives (from the Impact Test Facility 40-mm gun) to ensure that explosives do not enter the waste stream	Does not appear to be a controlled document. Without revision history, cannot tell when this document was first issued, and how the potential for unconsumed explosives was addressed when the Impact Test Facility (ITF) began in 1996

* Information Category Codes: A = forms intended for use in waste certification, B = data from controlled databases and published documents, C = unpublished data, and D = interviews, memos, and letters

TWCP Record No.	Information Category Code	Information	Source	Summary	Limitations
TWCP-5158	D	Chemical use in P/S code FF	Interview with Fred Hampel (TA-55 SME) on 4/19/01	Magnesium perchlorate was used in the glovebox line in P/S code FF, and was the only chemical used there. It was used as a water getter, and was changed once during the period 1987 to 1992. The spent chemical was sent to cement fixation, P/S code CF.	No information about after 1992
TWCP-5164	D	Sources of Cs-137 and Pa-231 in TA-55 TRU waste	Interview with Jim Foxx (TA-55 SME) on April 2, 2001	Plutonium operations never handled Cs-137 or Pa-231 in any of the Pu processing areas at TA-55. However, Cs-137 is expected to be present in the wastes because it is a fission product of several Pu isotopes. Pa-231 is expected to be present (as a function of the age of the waste) because it is a decay chain daughter of Pu-239 and U-235.	None
TWCP-5165	D	Sources of Cs-137, Pa-231, and Cm-244 in TA-55 TRU waste	Interview with Jim Foxx (TA-55 SME) on April 11, 2001	Dominant source of Cs-137 expected to be due to residual contamination from original separation of Pu from production fuel. Cm-244 introduced in P/S code DOP starting in 1988, but could also show up after that date in IS, WE, CA and CF.	None
TWCP-5166	D	Secondary radionuclides used in P/S code PI	Interview with Jim Foxx (TA-55 SME) on April 11, 2001	Amendment of Foxx's 1997 memo (TWCP-882): P/S code PI was a user of U, Np and Am isotopes	None

* Information Category Codes: A = forms intended for use in waste certification, B = data from controlled databases and published documents, C = unpublished data, and D = interviews, memos, and letters

TWCP Record No.	Information Category Code	Information	Source	Summary	Limitations
TWCP-5167	D	Use of lead in P/S code DOP	Interview with Jim Foxx (TA-55 SME) on February 7, 2001	In addition to an encapsulated lead pig, P/S code DOP also used lead shielding (which therefore requires application of HWN D008 to its waste).	None
TWCP-AK-2.1-002,R.2	A	*Process Acceptable Knowledge Report for Chloride Operations at TA-55*	Generators interview and TWCP AK references	Detailed information on each P/S code for chloride operations at TA-55	None
TWCP-AK-2.1-004,R.2	A	*Process Acceptable Knowledge Report for Miscellaneous Operations at TA-55*	Generators interview and TWCP AK references	Detailed information on each P/S code for miscellaneous operations at TA-55	None
TWCP-AK-2.1-005,R.2	A	*Process Acceptable Knowledge Report for Nitrate Operations at TA-55*	Generators interview and TWCP AK references	Detailed information on each P/S code for nitrate operations at TA-55	None
TWCP-AK-2.1-006,R.2	A	*Process Acceptable Knowledge Report for Pyrochemical Operations at TA-55*	Generators interview and TWCP AK references	Detailed information on each P/S code for pyrochemical operations at TA-55	None
TWCP-AK-2.1-007,R.2	A	*Process Acceptable Knowledge Report for Special Processing Operations at TA-55*	Generators interview and TWCP AK references	Detailed information on each P/S code for special processing operations at TA-55	None
TWCP-PLAN-0.2.7-001,R.5	C	*Los Alamos National Laboratory Transuranic Waste Characterization AK Information Summary*	LANL TA-55 waste management database, LANL TA-54 TRU waste management database, and TWCP AK reference base on generator's original data	Detailed information on each waste drum and waste stream	None

* Information Category Codes: A = forms intended for use in waste certification, B = data from controlled databases and published documents, C = unpublished data, and D = interviews, memos, and letters

MAP OF LANL

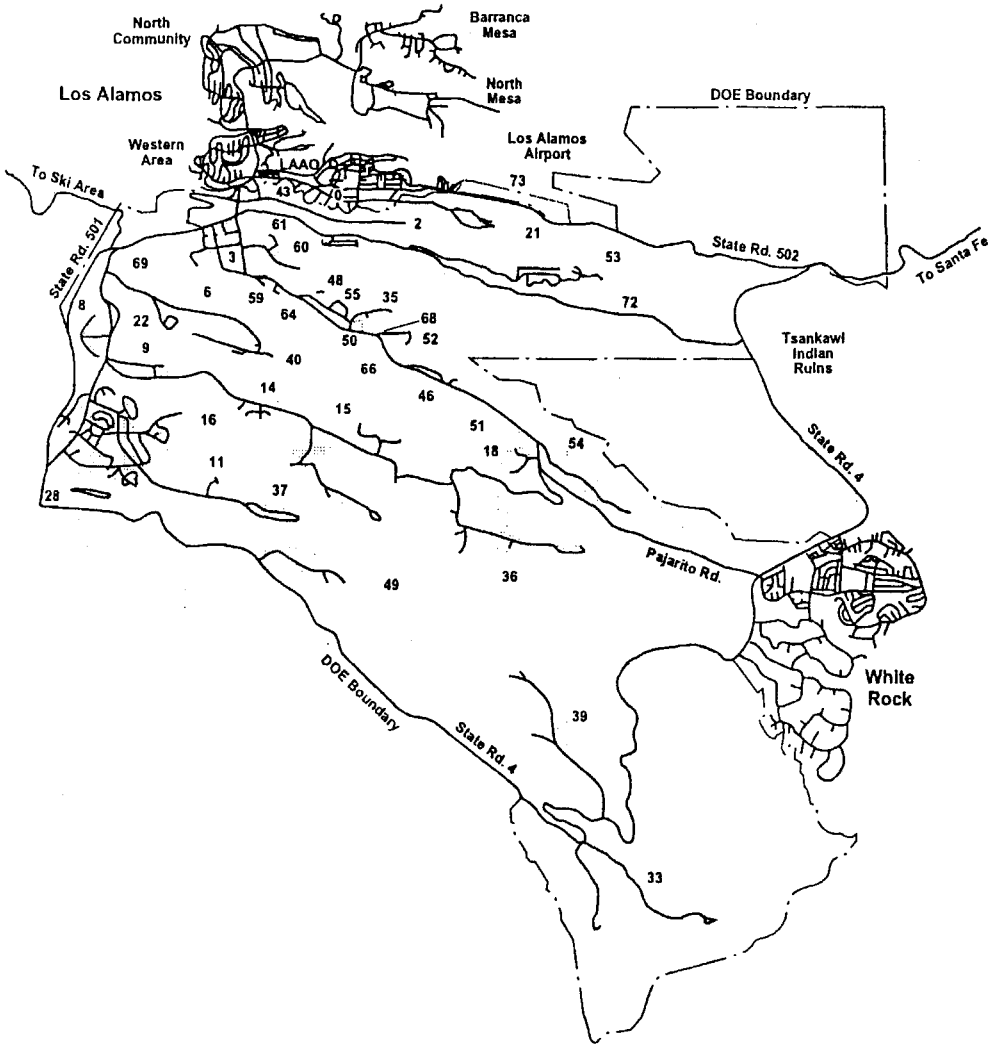

Technical Area Locations

TA-0	Unassigned Land Reserve
TA-2	Omega Site
TA-3	South Mesa Site
TA-5	Beta Site
TA-6	Two Mile Mesa Site
TA-8	Anchor Site West
TA-9	Anchor Site East
TA-11	K-Site
TA-14	Q-Site
TA-15	R-Site
TA-16	S-Site
TA-18	Pajarito Laboratory
TA-21	DP-Site
TA-22	TD-Site
TA-28	Magazine Area A
TA-33	HP-Site
TA-35	Ten Site
TA-36	Kappa Site
TA-37	Magazine Area C
TA-39	Ancho Canyon Site
TA-40	DF-Site
TA-41	W-Site
TA-43	Health Research Lab & DOE Headquarters
TA-46	WA-Site
TA-48	Radiochemistry Site
TA-49	Frijoles Mesa Site
TA-50	Waste Management Site
TA-51	Radiation Exposure Facility
TA-52	Reactor Development Site
TA-53	Meson Physics Facility
TA-54	Waste Disposal Site
TA-55	Plutonium Facility Site
TA-57	Fenton Hill Site
TA-58	Two Mile North Site
TA-59	OH-Site

MAP OF TA-55

Note: The Plutonium Facility, Building PF-4, is labeled PF-4 on this map.

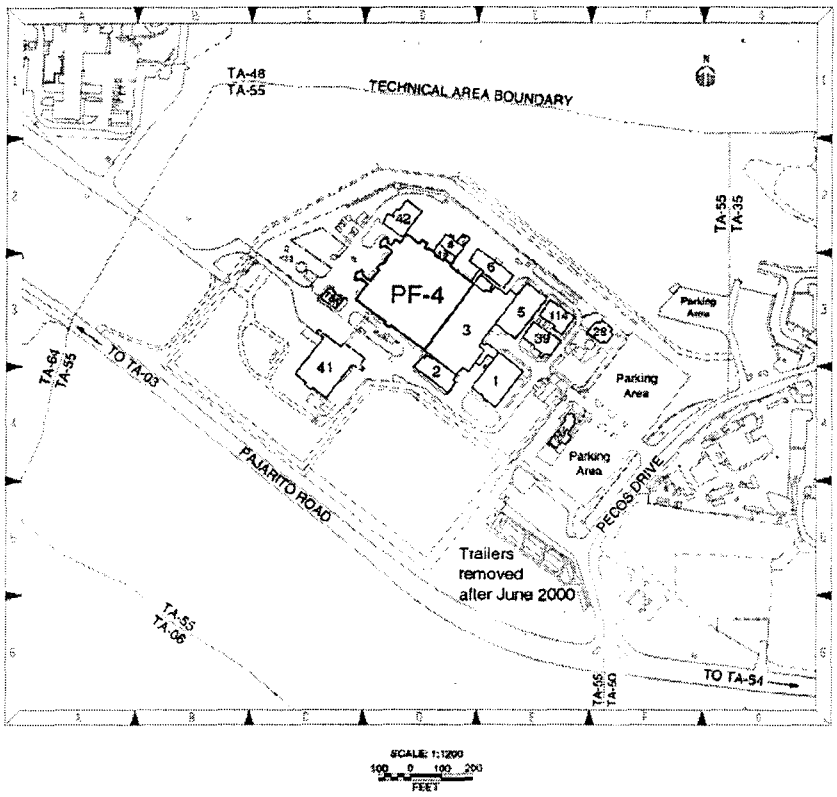

TIMELINE FOR METAL OPERATIONS

See Section 4.0 for details of RCRA code applicability to waste types generated under each P/S Code.

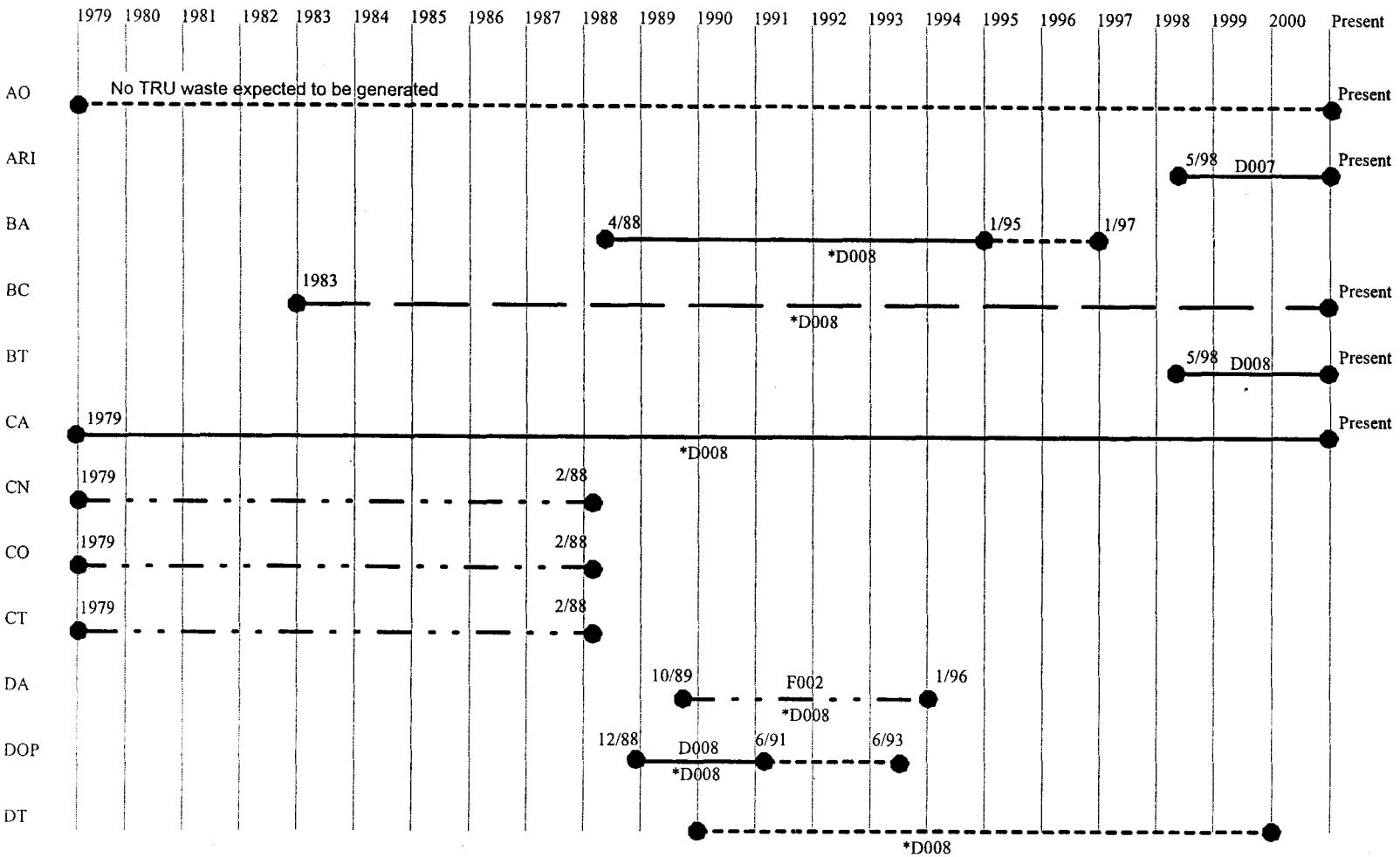

TIMELINE FOR METAL OPERATIONS (continued)

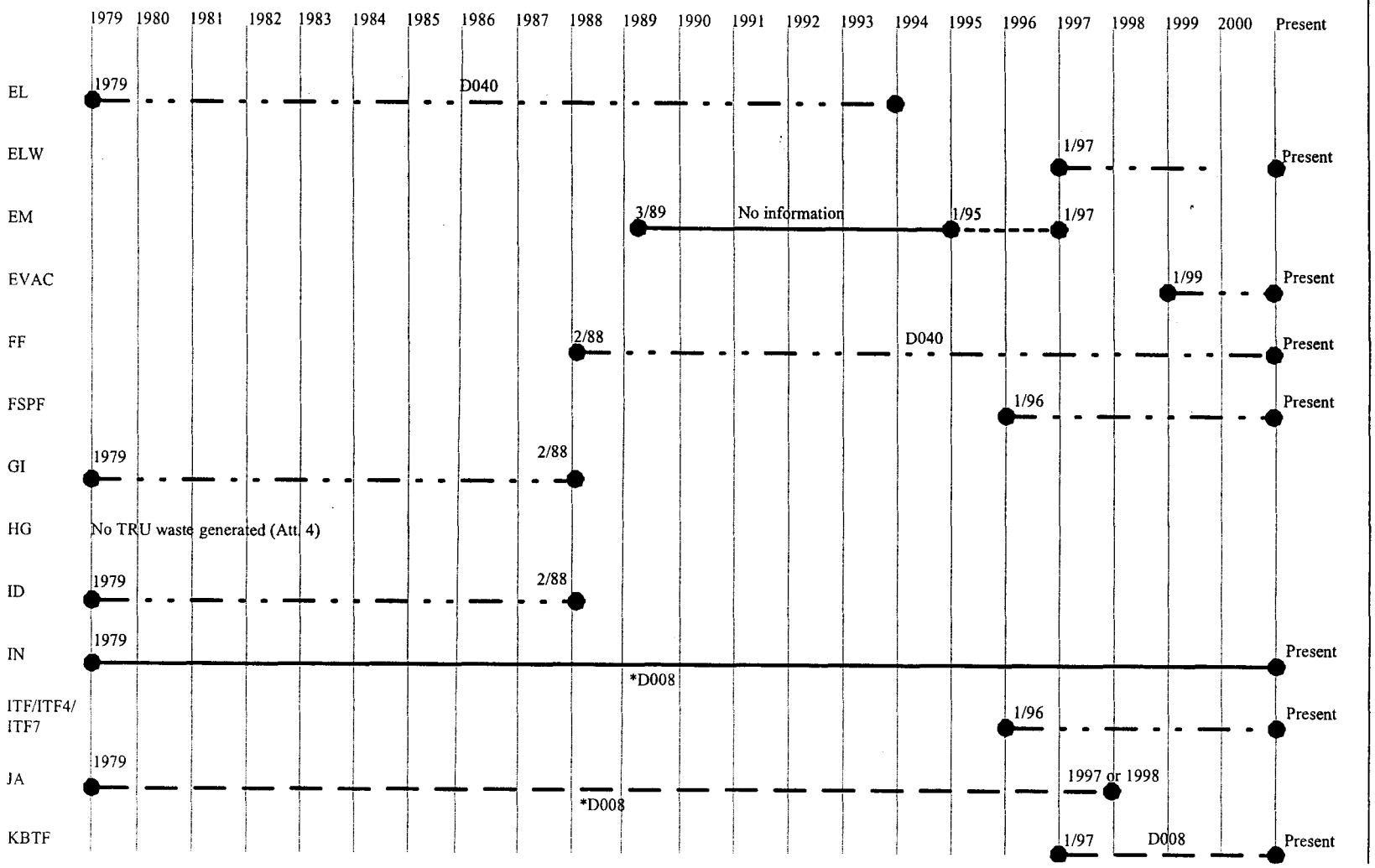

TIMELINE FOR METAL OPERATIONS (continued)

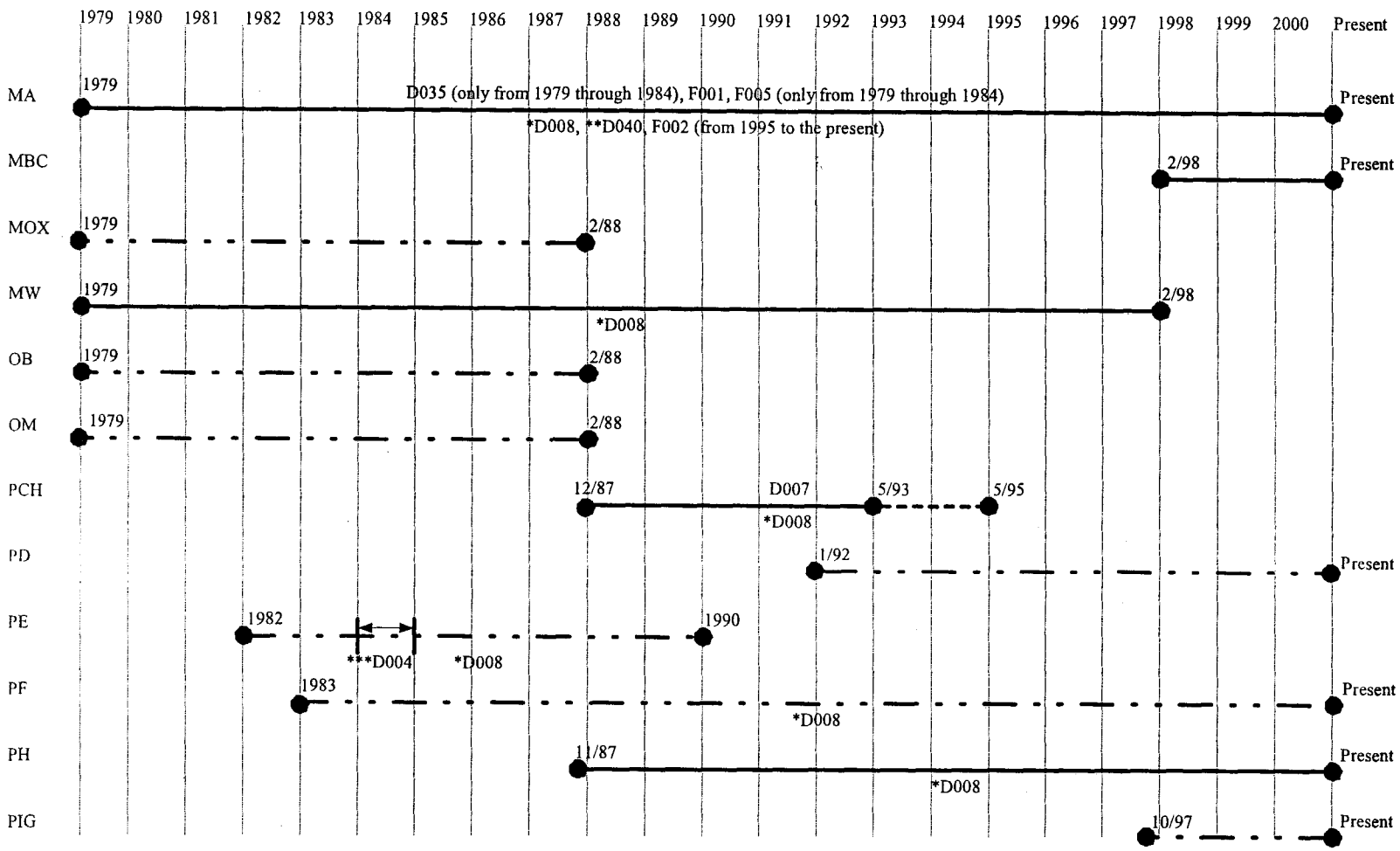

TIMELINE FOR METAL OPERATIONS (continued)

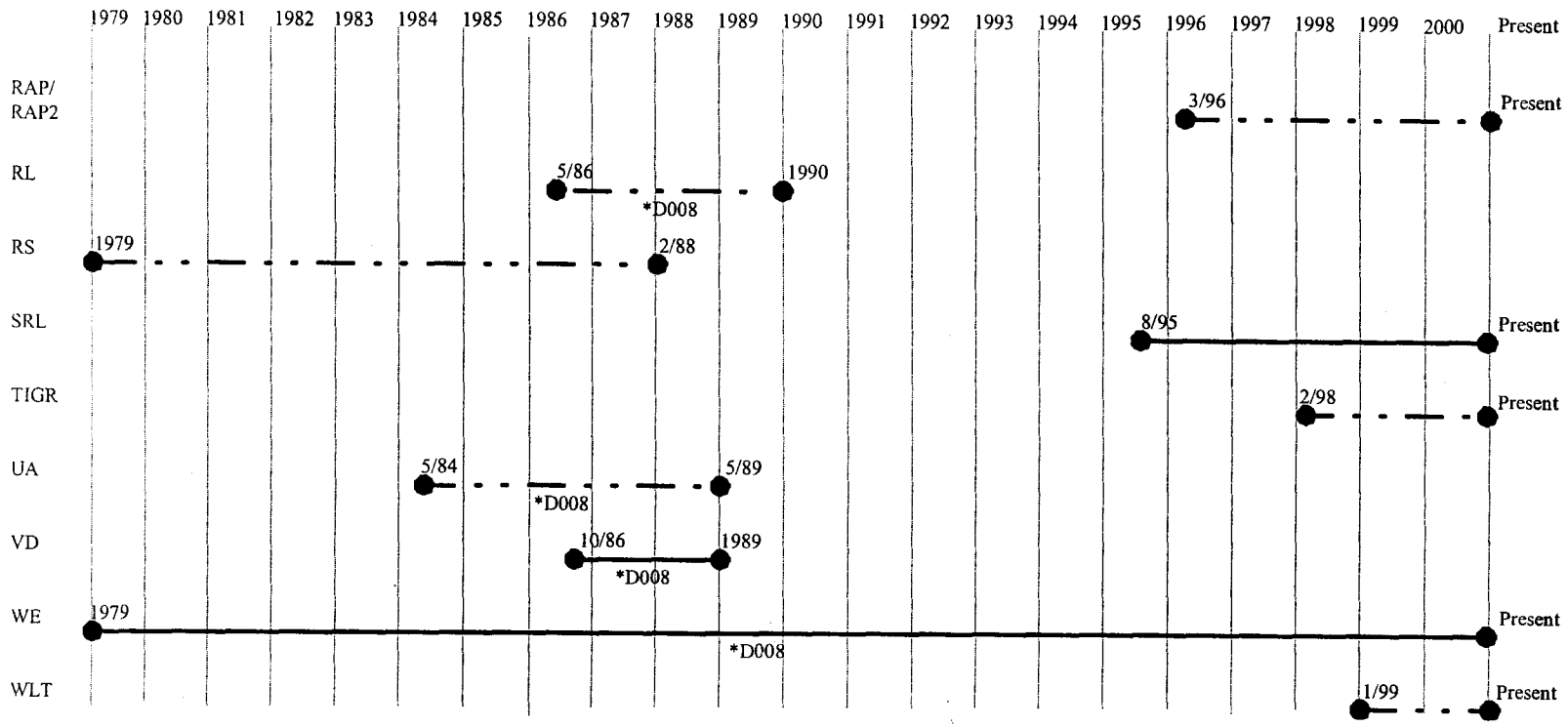

* Prior to 1987, leaded gloves were not segregated from combustible debris. Between 1987 and May 1992, they were segregated and discarded in the metal debris waste stream. Since May 1992, they have been routinely segregated and assigned to a leaded-glove waste stream, still under the originating P/S code (TWCP-4166).

** Trichloroethylene was used in the final cleaning of metal parts from 1979–1992, resuming in February 2000.

*** Arsenic was only used in 1984 and perhaps into 1985.

TIMELINE EXPLANATION

The P/S code is established in either the P/S diagrams or in both (or all) revisions of the procedures designating the start and end dates (e.g., Rev. 0 to Rev. 1; or Rev. 0 to Rev. 5)

The P/S code is not identified in the procedure, but the process description matches the P/S code and the description in previous or later revisions of the same procedure.

Extrapolate out two(2) years beyond the last procedure to next possible review date.

Time period based on subject matter expert comments.

PROCESS INPUTS AND OUTPUTS

P/S Code	P/S Title	Process Inputs		Process Outputs		EPA Codes[2]	References[3]
		Feed Stream(s)	Chemicals/Reagents	Product	Waste Stream[1]		
AO	Assembly Operation	Pu metal (high purity)	No chemicals used	Pu metal parts	Waste is LLW		MET-69, MET-74/ TWCP-3541
ARI	ARIES	Pu metal (high purity)	Sodium hydroxide, sodium nitrate, sodium sulfate	Pu metal and plutonium oxide to vault	rags, tools, labware, gloves, spent electrolyte solution	D007	MET-49, MET-50/ TWCP-3541
BA	Basement Isopress	Pu and isotopes of other radionuclides sealed in coupons	No chemicals used	Pu and isotopes of other radionuclides sealed in coupons	Rags, paper, tools, gloves, spent hydraulic fluid, spent hydraulic fluid, silicone lubricant, isopropyl alcohol, miscellaneous materials consisting of stainless steel, aluminum, titanium and firebrick	*D008	MET-48/ TWCP-3541
BC	Physical Properties	Actinide metals, alloys, and compounds	No chemicals used	Actinide metals, alloys, and compounds	rags, paper, tools, gloves, glass, plastic and metal labware, press dies	*D008	MET-41, MET-64/ TWCP-3541
BT	Burst Testing	Pu metal (high purity)	sodium hydroxide, sodium tetraborate, tin-lead solder	Material to vault.	rags, tools, gloves, HEPA filters, wire, strain gauges	D008	MET-58/ TWCP-3541
CA	Casting	High purity metal from P/S code RM and SS or other P/S codes, e.g. SRL	Freon TF, bromobenzene	Cast metal parts	Rags, tools, gaskets, graphite crucibles, rags, tools, tantalum parts, plastic and glass, leaded gloves	*D008	MET-45, MET-62, MET-66/ TWCP-3541

P/S Code	P/S Title	Process Inputs		Process Outputs		EPA Codes[2]	References[3]
		Feed Stream(s)	Chemicals/Reagents	Product	Waste Stream[1]		
CN	Carbon-Nitrogen-Oxygen (C-N-O) Analysis	Sample reactor fuel pellet for analysis	No chemicals used	No Product. Samples not analyzed returned to P/S code GI. Analyzed samples to vault	Labware, rags, non-leaded gloves, HEPA filters, rubber, wood, paper, cardboard, glass vials, balances, steel and brass storage containers, graphite, molybdenum trays, magnesium oxide crucibles		MET-59/ TWCP-3541
CO	Comminution	Crushed briquettes from P/S code RS	Stearic acid, nickel powder, polyethylene glycol	Product to P/S code RS, scrap to vault.	Tools, labware, rags, non-leaded gloves, HEPA filters, rubber, wood, paper, cardboard, glass vials, balances, steel and brass storage containers, graphite, molybdenum trays, stainless and hardened steel balls		MET-59/ TWCP-3541
CT	Compatibility Testing	Encapsulated material, P/S code is a status only, hence no TRU waste was probably generated.	No chemicals used	N/A	N/A		MET-59/ TWCP-3541
DA	Alloy Development	Pu metal, alloying metals.	Bromobenzene, Freon TF	Pu alloys to P/S CA, SS or aqueous recovery	Labware, gloves, rags, metal cups	*D008 F002	MET-55/ TWCP-3541
DOP	Detector Oxide Preparation	Oxides of various radionuclides	No chemicals used	Encapsulated oxide	Labware, gloves, rags	D008 *D008	MET-71, MET-72/ TWCP-3541
DT	John Ward R&D	Nonprocessing	Nonprocessing	N/A	N/A		

P/S Code	P/S Title	Process Inputs		Process Outputs		EPA Codes[2]	References[3]
		Feed Stream(s)	Chemicals/Reagents	Product	Waste Stream[1]		
EL	Element Loading	Reactor fuel pellets from P/S code GI	Ethanol, mild acids and caustics, helium, sodium metal, Dowanol 80, trichloroethylene	Fuel pin	Tools, labware, rags, non-leaded gloves, spent welding rods, Dowanol 80 containing sodium metal	D040	MET-59/ TWCP-3541
ELW	Experimental Laser Welding	Pu metal	Ethanol	Welded part	Gloves, rags		MET-60/ TWCP-3541
EM	Electron Microscopy	No AK information available					
EVAC	Evacuation and Bake-out	Pu metal parts	No chemicals used	Pu metal parts	Waste is LLW		MET-69, MET-74/ TWCP-3541
FF	Fuel Fabrication	Uranium oxide, uranium carbide, uranium nitride	Graphite, sugar, stearic acid, ethylene glycol, helium, argon, hydrogen gas, sodium metal, Dowanol 80, bromobenzene, MolyKote, magnesium perchlorate, microspheres, ethylene glycol, surfactants, hexane, chloroform, ethanol, trichloroethylene, chloroform	Fuel pin	Tools, labware, rags, non-leaded gloves, tungsten carbide and hardened steel press dies; diamond or aluminum oxide grinding wheels; HEPA filters; rubber; wood; paper; cardboard; glass vials; balances; steel and brass storage containers; ceramic, graphite, and magnesium oxide crucibles, vacuum pumps; graphite and molybdenum trays; thermocouples; stainless and hardened steel balls	D040	MET-59/ TWCP-3541

P/S Code	P/S Title	Process Inputs		Process Outputs		EPA Codes[2]	References[3]
		Feed Stream(s)	Chemicals/Reagents	Product	Waste Stream[1]		
FSPF	Special Furnace Operation	Pu metal (high puity)	No chemicals used	Pu metal to vault, Pu contaminated metals to recovery if > DL.	Pu contaminated metals to discard if < DL. Rags, gloves, ceramics, glass, plastics		MET-57, MET-64/ TWCP-3541
GI	Pellet Grinding and Inspection	Uranium or Pu pellets from P/S code RS	No chemicals used	Pellets to P/S EL or to vault	Rags, tools, non-leaded gloves, HEPA filters, rubber, wood, paper, cardboard, glass vials, balances, steel and brass storage containers, graphite, molybdenum trays, diamond and aluminum oxide grinding wheels		MET-59/ TWCP-3541
HG	Pu Removal by Mercury	"Cold" Experiments only	N/A	N/A	No TRU waste generated		MET-62/ TWCP-3541
ID	Immersion Density	Uranium or Pu pellets from P/S code GI	Bromobenzene	Pellets to P/S code EL, FF or ME	Status code, so no TRU waste generated; non-leaded gloves; LLW		MET-59/ TWCP-3541
IN	Inspection	Status only, Physical inspection of parts	No chemicals used	Inspected Parts	Gloves, rags, tools	*D008	MET-69/ TWCP-3541
ITF	Impact Test Facility	Pu metal	GoJo cleaner	7" gas gun tube to NMT-9 for recovery; data from 40-mm gun; materials reused if possible	Rags, metals, wire, HEPA filters, gloves from 40-mm gun; no TRU waste generated from 7" gas gun		MET-58/ TWCP-3541
ITF4	Impact Test Facility	Pu metal	GoJo cleaner	7" gas gun tube to NMT-9 for recovery; data from 40-mm gun; materials reused if possible	Rags, metals, wire, HEPA filters, gloves from 40-mm gun; no TRU waste generated from 7" gas gun		MET-58/ TWCP-3541

P/S Code	P/S Title	Process Inputs		Process Outputs		EPA Codes[2]	References[3]
		Feed Stream(s)	Chemicals/Reagents	Product	Waste Stream[1]		
ITF7	Impact Test Facility	Pu metal	GoJo cleaner	7-in. gas gun tube to NMT-9 for recovery; data from 40-mm gun; materials reused if possible	Rags, metals, wire, HEPA filters, gloves from 40-mm gun; no TRU waste generated from 7-in. gas gun		MET-58/ TWCP-3541
JA	Gas Isostatic Press	Pu and isotopes of other radionuclides	No chemicals used	Material returned to P/S code BC	Gloves, rags, tools	*D008	MET-64, MET-69/ TWCP-3541
KBTF	Kolsky Bar Test Facility	Pu metal	No chemicals used; plastic-wrapped lead bricks used as damper	Pu metal returned to sending P/S code	Gloves, rags, tools	D008	MET-58/ TWCP-3541
MA	Machining	High purity Pu metal	Tap Magic, Freon TF, Metalprep 79, Texaco Regal 32 oil, methyl ethyl ketone, trichloroethylene, ethanol, isopropanol	Machined part, scrap and trunings to recovery	Gloves, rags, tools, plastics, grinding wheels, lathe cutting tools, milling machining cutters	F001 F002 F005 *D008 D035 D040	MET-42, MET-46, MET-47, MET-62, MET-67, MET-68, MET-76/ TWCP-3541
MBC	Crystal	Pu metal	No chemicals used	Pu metal to recovery	Gloves and rags		MET-63/ TWCP-3541
MOX	Mixed Oxide Fuel Production	Uranium/Pu oxide	Zinc stearate	Fuel pellets	Tools, labware, rags, non-leaded gloves, HEPA filters, rubber, wood, paper, cardboard, glass vials, balances, steel and brass storage containers, graphite, molybdenum trays		MET-63/ TWCP-3541

P/S Code	P/S Title	Process Inputs		Process Outputs		EPA Codes[2]	References[3]
		Feed Stream(s)	Chemicals/Reagents	Product	Waste Stream[1]		
MW	Metal Working	Pu metal, uranium metal	Freon TF	Pu metal to recovery, uranium metal to vault	Gloves, rags, paper, copper wool, tools, plastic bottles, glass and rubber labware, aluminum foil, cutting wheels, milling machine cutters, and lathe cutting tools. Tritium-contaminated copper wool and rags	*D008	MET-42/ TWCP-3541
OB	Oxide Blending	Enriched uranium oxide, depleted uranium oxide, Pu oxide	Graphite, stearic acid	Blended oxides to P/S code RS	Rags, tools, non-leaded gloves, HEPA filters, rubber, wood, paper, cardboard, glass vials, balances, steel and brass storage containers, graphite, molybdenum trays, ceramic and graphite crucibles		MET-59/ TWCP-3541
OM	Oxygen to Metal Ratio Determination	Reactor fuel pellets	No chemicals used	Reactor fuel pellets	Status code, no TRU waste generated; LLW		MET-59/ TWCP-3541

P/S Code	P/S Title	Process Inputs		Process Outputs		EPA Codes[2]	References[3]
		Feed Stream(s)	Chemicals/Reagents	Product	Waste Stream[1]		
PCH	Plasma Chemistry	Pu metal (varying purity)	Various gases used for plasma: tetrafluoroethane, hexafluoroethane, perfluoropropane, oxygen, argon, carbon dioxide, Fomblin pump oil (contains perfluoropolyether)	Pu metal to recovery	Gloves, rags, tools, glass, plastic and metal labware; used pump oil (Fomblin brand); discarded test samples such as tantalum foil, tungsten foil, tungsten-coated silicon, silicon dioxide; and various actinide surfaces	D007 *D008	MET-40/ TWCP-3541
PD	Pit Disassembly	Pu metal, uranium metal	Freon TF SF-2I	Pu metal to recovery, uranium metal to vault	Gloves, rags, copper wool, tools, plastic bottles, glass and rubber labware, aluminum foil, cutting wheels, milling machine cutters, and lathe cutting tools. Tritium-contaminated copper wool and rags		MET-42, MET-50/ TWCP-3541
PE	Sputtering Process	Pu metal (high purity), arsenic, gold, lutetium	No other chemicals used	Part with sputtered metal coating	Gloves, rags, tools, metals used in coating process	D004 *D008	MET-54/ TWCP-3541
PF	Plutonium Surfaces	Pu metal	Ethanol and possibly methanol	Pu metal to recovery	Tools, labware, rags, gloves, plastics	*D008	MET-64/ TWCP-3541
PH	Thermal Hydride/Dehydride	Pu metal, Pu alloys and other actinides	hydrogen gas	Pu metal and alloys to recovery, other actinides to vault	Tools, labware, rags, paper, gloves, used Fromblin pump oil	*D008	MET-43, MET-44/ TWCP-3541
PIG	Welding	Beryllium, aluminum	Ethanol	Beryllium welded part	Gloves and rags		MET-61/ TWCP-3541
RAP/ RAP2	Research Alloy Preparation	No activity in these P/S codes	None				MET-64/ TWCP-3541

P/S Code	P/S Title	Process Inputs		Process Outputs		EPA Codes[2]	References[3]
		Feed Stream(s)	Chemicals/Reagents	Product	Waste Stream[1]		
RL	Radiochemical Coating	Pu metal (high purity), other metals	Gold metal and lutecium metal	Pu metal part with metal coating	Gloves and rags, metals used in coating process	*D008	MET-65/ TWCP-3541
RS	Pellet Sintering	Enriched uranium oxide, depleted uranium oxide, Pu oxide from P/S code OB; also returned from P/S code CO	Argon, hydrogen gas, MolyKote	Sintered fuel pellets to P/S code GI	Tools, labware, rags, non-leaded gloves, HEPA filters, rubber, wood, paper, cardboard, glass vials, balances, steel and brass storage containers, graphite, molybdenum trays, ceramic and graphite crucibles, thermocouples, heating elements, vacuum pumps		MET-59/ TWCP-3541
SRL	Special Recovery Line	Pu metal, uranium metal	Freon TF SF-2I copper wool	Pu metal to recovery, uranium metal to vault	Gloves, rags, copper wool, tools, plastic bottles, glass and rubber labware, aluminum foil, cutting wheels, milling machine cutters, and lathe cutting tools, tritium-contaminated copper wool and rags		MET-42, MET-51, MET-52 MET-53, MET-62/ TWCP-3541
TIGR	Thermally Induced Gallium Removal	Pu-gallium oxide	argon and hydrogen gas	Separated Pu oxide and gallium oxide	Tools, labware, rags, gloves		MET-56/ TWCP-3541

P/S Code	P/S Title	Process Inputs		Process Outputs		EPA Codes[2]	References[3]
		Feed Stream(s)	Chemicals/Reagents	Product	Waste Stream[1]		
UA	Uranium Fabrication	Uranium metal and oxide	Freon TF	Uranium to vault	Gloves, rags, copper wool, tools, glass and rubber labware, aluminum foil, cutting wheels, milling machine cutters, and lathe cutting tools.	*D008	MET-69, MET-73/ TWCP-3541
VD	Vapor Degreaser and Sand Blasting	Pu metal parts	Freon TF	Cleaned parts	Gloves, rags, tools	*D008	MET-69/ TWCP-3541
WE	Welding	Pu metal, other metals including aluminum, titanium, gold	Freon TF	Welded parts	Gloves, rags, tools, spent welding rods, stainless steel capsules	*D008	MET-39, MET-69/ TWCP-3541
WLT	Welding Leak Test	Pu metal parts	No chemicals used	Pu metal parts	Plastic gloves, bags and rags, cotton gloves, minimal amount of metal items		MET-74/ TWCP-3541

[1] All P/S codes generate routine laboratory debris waste. The debris waste may consist of glassware, plastics, ceramic materials, paper, rags, HEPA filters, metal containers, brushes, and small tools. Leaded gloves may also be generated and are segregated.

[2] See discussion in Section 4.0 for details on the applicability of the EPA HWNs listed in this column. The EPA HWNs listed apply to the solid TRU waste only and not to any other waste forms that may undergo further treatment or processing (e.g., evaporation or cement fixation). The resulting treated waste stream is evaluated for hazardous waste constituents and assigned the applicable EPA HWNs. All P/S codes have the potential to generate leaded gloves. The gloves are segregated from other metal debris waste and are assigned EPA HWN D008 under the originating P/S code.

[3] Refer to the Acceptable Knowledge Roadmap in Attachment 1.

*D008 due to leaded gloves

SIMPLIFIED PROCESS FLOW DIAGRAM FOR METAL OPERATIONS

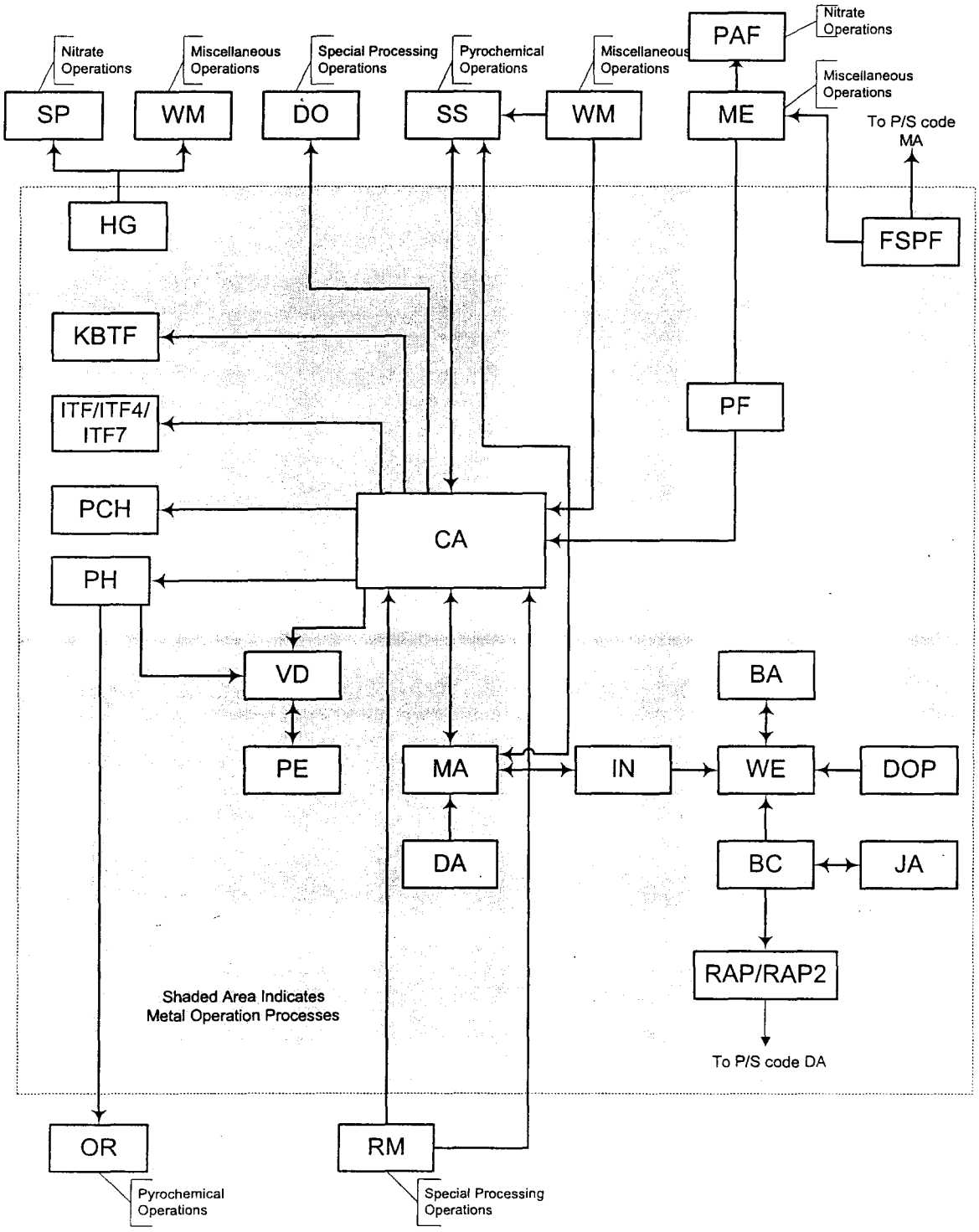

NOTE: All of these P/S codes may obtain feed material from or send product output to the vault.

SIMPLIFIED PROCESS FLOW DIAGRAM FOR METAL OPERATIONS (continued)

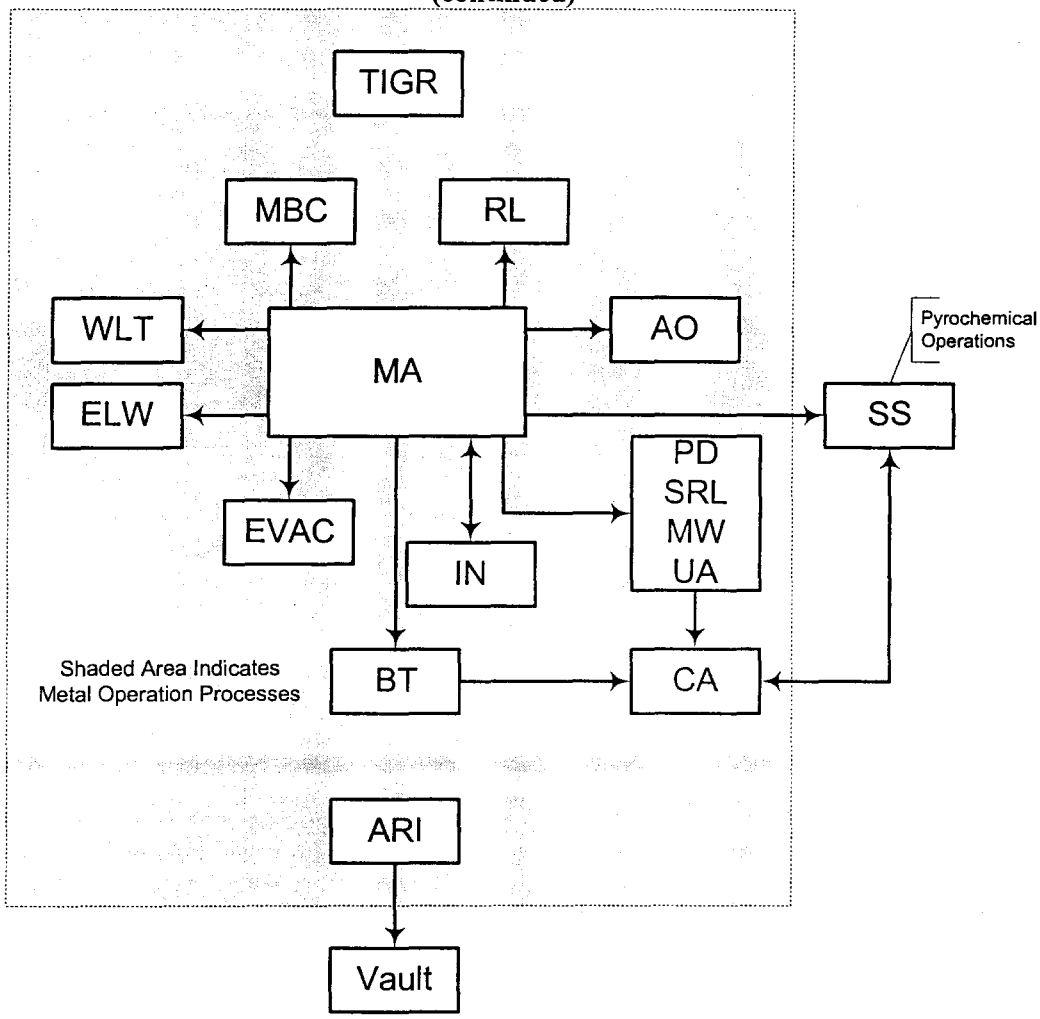

NOTE: All of these P/S codes may obtain feed material from or send product output to the vault.

NOTE: P/S code UA tracks uranium compounds from Pit Disassembly. Activities under this P/S code would be similar to those under P/S codes IN, MW, and WE.

LEGEND

AO	Assembly Operations	MW	Metal Working
ARI	ARIES	PD	Pit Disassembly
BM	Burning Metal	RB	Roasting and Blending
BT	Burst Testing	RL	Radiochemical Coating
CA	Casting	SRL	Special Recovery Line
ELW	Experimental Laser Welding	SS	Salt Stripping
EVAC	Evacuation and Bake Out	TIGR	Thermally Induced Gallium Removal
IN	Inspection	UA	Uranium Fabrication
MA	Machining	WLT	Welding Leak Test
MBC	Crystal		

SIMPLIFIED PROCESS FLOW DIAGRAM: REACTOR FUEL DEVELOPMENT

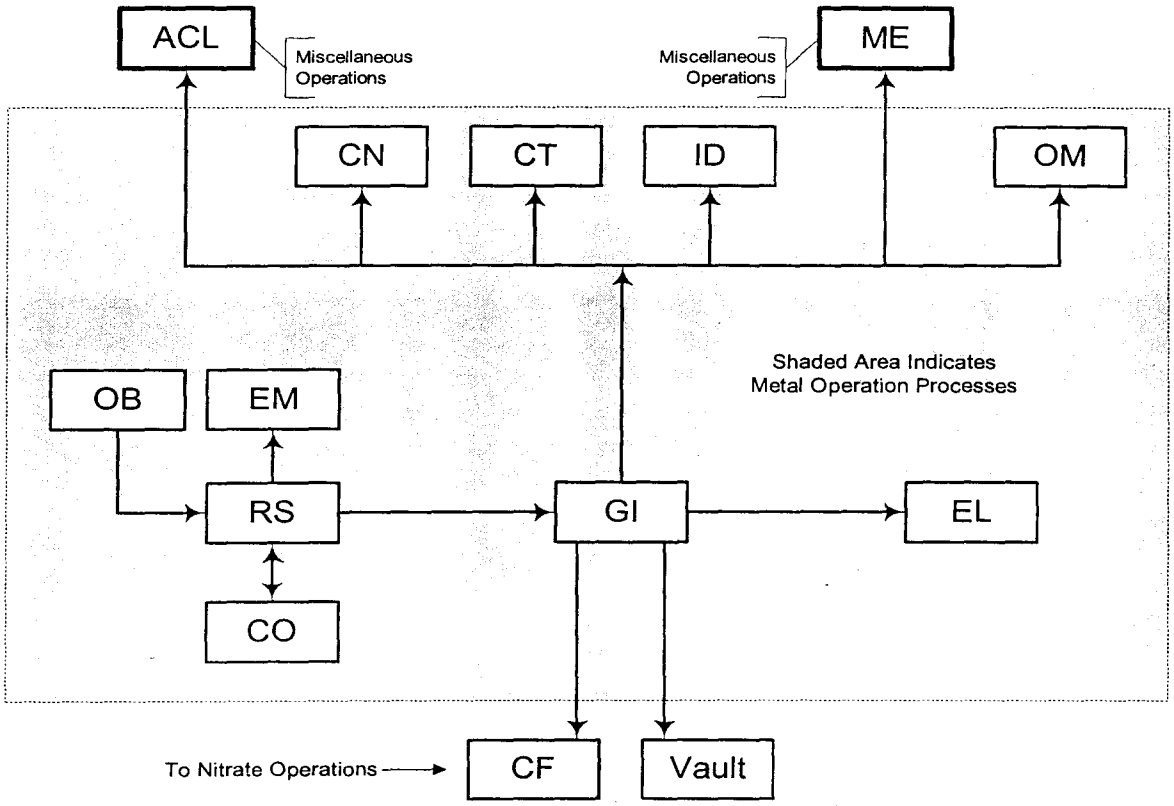

In 1988, P/S codes CO, GI, ID, OB, and RS were combined into P/S code FF. P/S codes CT, ID, and OM are status codes only, and probably do not generate TRU waste.

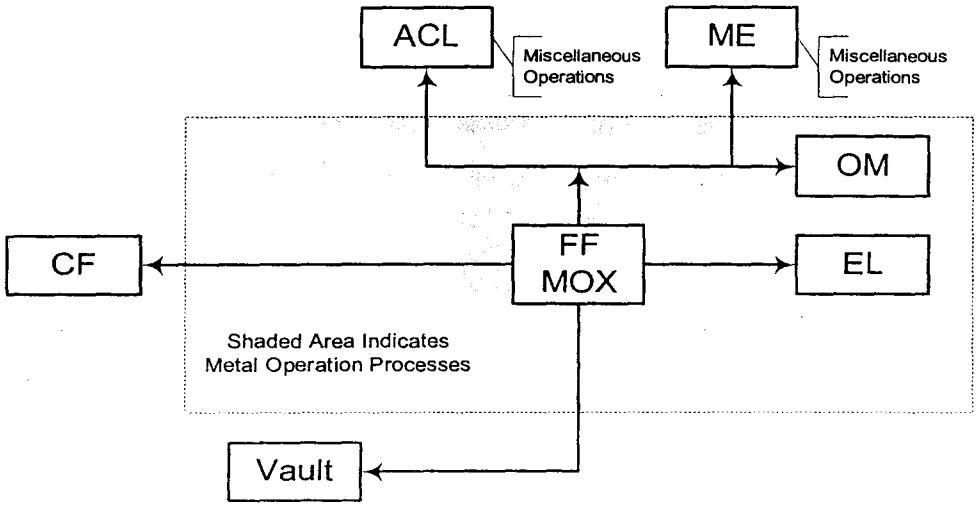

NOTE: All of these P/S codes may obtain feed material from or send product output to the vault.

Decision/Discrepancy Resolution Documentation
TA-55 Metals Operations

Item Identification*	AK No. 1	Source No. 1	AK No. 2	Source No. 2	Decision/Discrepancy	Rationale**
CA	Freon used until 1992 and then replaced by SF2I	MET-62/TWCP-3541	Freon and bromobenzene were the only chemicals used	MET-66/TWCP-3541	Process report states freon and bromobenzene	C—meeting with SMEs said to keep freon and bromobenzene. Bromobenzene has no hazardous waste number. SF2I is non-hazardous. See attached meeting notes.
FSPF	States FSPF is a new code and does not generate waste	MET-64/TWCP-3541	States DA became FSPF in 1996 and generates debris waste	MET-57/TWCP-3541	Process report uses MET-57 information in section 3.5.3.6	C—meeting with SME's stated FSPF was not begun until 1996, and does not generate any hazardous waste. DA only had leaded gloves and they were segregated after 1992. Therefore FSPF does not contain any hazardous constituents. See attached meeting notes.
RL	Per Jack Simpson, arsenic may have been used as a coating material	TWCP-3541/MET-65	Process report does not mention arsenic	Process report, section 3.5.2.19		C—RL did not begin until May 1986. This process was similar to P/S code PE, which possibly used arsenic between 1982 and 1986, probably 1984 or 1985. RL did not use arsenic, per SME. See attached meeting notes.
HG and AO	States P/S code HG is a cold process	TWCP-3541/MET-62	Lists P/S code HG and the mercury associated with HG as being in TRU waste	TWCP-882	Process report section 3.5.2.13 and the timeline in the report state it is a cold process Report also says waste in AO is LLW, but TWCP-882 indicates TRU	A—SME indicated HG P/S code never used radioactive material, so it did not generate any TRU mixed waste. Also, P/S code AO was both a LL and a TRU P/S code.

Item Identification*	AK No. 1	Source No. 1	AK No. 2	Source No. 2	Decision/Discrepancy	Rationale**
All	Timeframes for P/S codes	TWCP-882	Timeframes in report are not the same	Process report	Inconsistent	C—The purpose of TWCP-882 was to identify possible secondary radionuclides and not to assign time frames. Therefore ignore time frames from TWCP-882 as they are only estimates. Process report information is correct and is based on other, more accurate information. See attached meeting notes.

Sandy Wander — Evaluator (Print Name)
AK Investigator — Title
Sandy Wander — Signature
2/25/02 — Date

P Rogers — SPM Review (Print Name)
Pamela Rogers — Signature
2/26/02 — Date

* Item identification can be PS Code, waste stream, drum ID, item ID, or other identification of items affected.
** Rationale code: [A=Professional Judgment; B=Most Conservative Decision; C=Other (specify)]

Operation of the ARIES Electrolytic Can Decontamination System (MET-50/TWCP-3541) decontaminates the external surfaces of canned plutonium using an electrolytic decontamination system. An electrolyte (initially sodium nitrate, now sodium sulfate) and water are used in the system in a recycle mode. Sodium hydroxide is used for pH control. Wastes include electrolyte and water solutions contaminated with plutonium. There is the potential for chromium (D007) to be present in the electrolyte solution waste when this solution has been used to decontaminate stainless steel. Although no disposal path is mentioned in the reference, it is assumed that this liquid waste is sent either to cement fixation (P/S code CF) or to the RLWTF at TA-50.

Other P/S codes included in the Developmental Metal Operations group but for which no procedures were found during this AK search are listed below. SME input provided information on these P/S codes.

3.5.3.2 P/S Code AO: Assembly Operations

Operations in P/S code AO involve bringing nuclear material out of the glovebox and encapsulating it in a cold container (MET-69, MET-74/TWCP-3541). This outer container can be a bolted assembly or a welded assembly using electron beam, pressurized inert-gas metal arc (PIGMA), tungsten inert gas (TIG), or laser welding techniques. No solvents are used. Wastes include aluminum foil, plastic bags, and gloves. This waste is nearly always LLW.

3.5.3.3 P/S Code BT: Burst Testing

Hemi-shells are placed on a test stand and a buffered test solution is pumped into the shell and pressurized until it bursts (MET-58/TWCP-3541). Strain gauges monitor the deformation of the shell. The test solution is sodium tetraborate and sodium hydroxide and is filtered and reused. The solution is eventually discarded in the caustic waste line to the RLWTF at TA-50.

Wastes include rags. HEPA filters, gloves, electric lead wires, and strain gauges. Strain gauges have electrical contact points that are tin-lead solder. Metal waste from this P/S code would, therefore, carry EPA HWN D008. No solvents are used.

CCP Records Transmittal/Receiving Form

CCP Central Records/Records Custodian, 4021 National Parks HIghway - MS: GSA 203, Carlsbad, New Mexico 88220

Telephone Number: 505-234-7523, 505-234-7233, 505-234-7617
Fax Number: 505-234-7014

☒ Original Record
☐ Faxed Record

Attn:	Records Custodian	From:	Trey Greenwood
Ship to:	CCP Central Records/ CCP Records Custodian	Site:	Los Alamos National Laboratory
	4021 National Parks Highway - MS GSA 203	Company:	Technical Specialists
	Carlsbad, NM 88220	Telephone Number:	505-302-6000
		Date Sent:	11/23/04
Telephone Number:	505-234-7523		

Document Number	Title/Description	Record Date 11/10/04	Total Pages
D029	Attachment 3 - Acceptable Knowledge Source Document Summary for CCP-AK-LANL-6	~~9/17/2004~~ 9/23/04	1
	Process Acceptable Knowledge Report for Metal Operation Processes at TA-55	5/17/2001	81

N/A

Comments
None

CCP Records Center
Acceptance/Rejection Signature and Date

Records Accepted ☒ Christal Ingram (Signature) Christal Ingram (Printed Name) 02-24-05 (Date)

Records Rejected ☐ _____ (Signature) _____ (Printed Name) _____ (Date)

Reason for Rejection: _____

Re-submittal: _____ (Signature) _____ (Printed Name) _____ (Date)

DIVIDER PAGE ONLY

Not part of page count

Attachment 2 - CCP Records Transmittal/Receiving Form

CCP Central Records / Records Custodian, 4021 National Parks Highway - MS: GSA 203, Carlsbad, New Mexico 88220

Telephone Number: 505-234-7523

Fax Number: 505-234-7014

- [x] Original Record
- [ ] Fax Record
- [ ] E-mail Record

Attn:	Sheila Pearcy	From:	Amy Johns
Ship to:	CCP Central Records/ CCP Records Custodian 4021 National Parks Highway - MS GSA 203, Carlsbad, NM 88220	Site:	Los Alamos National Laboratory, CCP-AK-LANL-006
		Company:	Technical Specialists, LLC
		Telephone Number:	505-302-8669
Telephone Number:	505-234-7523	Date Sent:	1/26/2009

D029	Attachment 3 - Acceptable Knowledge Source Document Summary for CCP-AK-LANL-6	1/14/2009	2
	NA		

Please supercede existing Attachment 3.

Acceptance/Rejection Signature and Date

	Signature	Printed Name	Date
Records Accepted [x]	Sonia Gonzalez	SONIA GONZALEZ	02.17.09
Records Rejected [ ]			

Reason for Rejection:

N/A

Re-submittal:

Signature	Printed Name	Date

HP LaserJet *M2727nf MFP*

Fax Confirmation Report

HP LASERJET FAX

Feb-18-2009 8:49AM

Job	Date	Time	Type	Identification	Duration	Pages	Result
5133	2/18/2009	8:48:33AM	Send	96283238	0:33	1	OK

Controlled Copy

CCP-QP-008, Rev. 14 **Effective Date: 09/19/2007**
CCP Records Management **Page 29 of 29**

Attachment 2 - CCP Records Transmittal/Receiving Form

CCP Central Records / Records Custodian, 4021 National Parks Highway - MS: GSA 203, Carlsbad, New Mexico 88220
Telephone Number: 505-234-7523
Fax Number: 505-234-7014

☒ Original Record
☐ Fax Record
☐ E-mail Record

Attn:	Sheila Pearcy	From:	Amy Johns
Ship to:	CCP Central Records/ CCP Records Custodian	Site:	Los Alamos National Laboratory, CCP-AK-LANL-006
	4021 National Parks Highway - MS GSA	Company:	Technical Specialists, LLC
	203, Carlsbad, NM 88220	Telephone Number:	505-302-8669
Telephone Number:	505-234-7523	Date Sent:	1/26/2009

D029	Attachment 3 - Acceptable Knowledge Source Document Summary for CCP-AK-LANL-6	1/14/2009	2
	NA		

Please supercede existing Attachment 3.

Acceptance/Rejection Signature and Date

	Signature	Printed Name	Date
Records Accepted ☑	Sonia Gonzalez	SONIA GONZALEZ	02.17.09
Records Rejected ☐			

Reason for Rejection:

N/A

Re-submittal

Signature	Printed Name	Date

QP-00-004,R.0
Effective Date: 06/18/03

TWCP-15416

RECORDS SUBMITTAL

INSTRUCTIONS: This form is prepared by the record source when submitting individual records, batch data reports, or a records package to the RMDC Center. For records packages, a Table of Contents (TOC) must also be submitted. Each record submitted requires a complete form.

MANDATORY: X To the best of my knowledge, the record(s) have no radioactive contamination.

Signature: _____

RECORD TYPE:

X Project 2010 ☐ Facility (RRES)

☐ Other: _____ ☐ UCNI ☐ Proprietary

RECORD SOURCE:

Submittal Date: 7/25/03 Z No.: 109592 Name/Org: PATRICIA PATTON – RRES-CE

Originator: JOHN MUSGRAVE Organization: NMT

TYPE OF RECORD/ACTION TO BE TAKEN

X Individual Record ☐ Batch Data Report ☐ Records Package (+ TOC)

X New ☐ Revision* ☐ Addition* ☐ Supersedes*

*Record Barcode Number: _____ *Review Cycle (if applicable): ☐ Yes ☐ No ☐ NA

RECORD ID NUMBER: (e.g., memo symbol number, procedure (include revision), deficiency number, batch data report number, unique record identifier if applicable):

TWCP-AK-2.1-007, R.2

Record Date: 5/18/01 Physical Page Count: 113 X Single Sided ☐ Double Sided

Category Number: (from page two): 07

RECORD TITLE, SUBJECT, AND/OR KEYWORDS:

TWCP-AK-2.1-007, R.2/IC1 Process AK Report for Special Processing at TA-55 (INCLUDES INTERIM CHANGE 1) - LA-UR-01-2560 – LA-UR-02-1712

RECORD CENTER USE ONLY

☑ Accepted Date: 7-25-03 ☐ Return Date: _____

Signature: _____ Resubmitted: _____

RIDs Type: LT

Scan Date: Bar Code QC Date: Bar Code

X-Sender: chsmith@norris-mail.lanl.gov
X-Mailer: QUALCOMM Windows Eudora Version 5.1
Date: Thu, 24 Jul 2003 10:37:16 -0600
To: pgp@lanl.gov
From: Cathy Smith <chsmith@lanl.gov>
Subject: Please retire Process AK Reports
Cc: sgw@lanl.gov
X-Scanned-By: MIMEDefang 2.35

Hi Patsy,

As we discussed yesterday, here is the list of Process AK Reports that we would like to retire as controlled documents and submit as records to RMDC. Could you let Betty Humphrey and myself know when you have the record IDs - we need to update the references in the main AKIS document.

Thanks a million!

Cheers, Cathy

The following can be turned into Records, to be referenced in our AKIS or AK Summaries...

1. TWCP-AK-2.1-002, R.2/IC1 Process AK Report for Chloride Operations at TA-55

2. TWCP-AK-2.1-003, R.2/IC1 Process AK Report for Metal Operations Processes at TA-55

3. TWCP-AK-2.1-004, R.2/IC2 Process AK Report for Miscellaneous Operations at TA-55

4. TWCP-AK-2.1-005, R.2/IC1 Process AK Report for Nitrate Operations at TA-55

5. TWCP-AK-2.1-006, R.2/IC1 Process AK Report for Pyrochemical Processes at TA-55

6. TWCP-AK-2.1-007, R.2/IC1 Process AK Report for Special Processing at TA-55

7. TWCP-AK-2.1-009, R.0/IC1 Process AK Report for Pu-238 Operations at TA-55

8. TWCP-AK-2.1-013, R.0 AK Report for NG Waste from Nitrate Operations at TA-55

9. TWCP-AK-2.1-014,R.0 AK Report for NG Waste from Miscellaneous Operations at TA-55

10. TWCP-AK-2.1-016,R.0 AK Report for NG Waste from Special Processing Operations at TA-55

11. TWCP-AK-2.1-017,R.0 AK Report for NG Waste from Metal/Pyrochemical Operations at TA-55

"The simplest questions are the hardest to answer."
Northrop Frye

Catherine H. Smith
Project 2010
RRES-CE Certification Group
Risk Reduction & Environmental Stewardship Division
Phone: 667-0113 Page: 664-7104

LA-UR-02-1712

INTERIM CHANGE REQUEST

☑ **TWCP** ☐ **WRR** ☐ **Other** **If Other, please identify:** _____	**IC Number:** 1
Person Requesting this Interim Change: Sandy Wander	
DOCUMENT INFORMATION	
Document Title: Process Acceptable Knowledge Report for Special Processing at TA-55	**Document No./Revision:** TWCP-AK-2.1-007,R.2 (LA-UR-02-1712)
Effective Date of Current Document: 05/18/01	**Document Preparer:** John Musgrave

CHANGE INFORMATION: Please ensure the following changes are made:

Section/Page	Change:	Reason/Justification:
Title Page and p.1	Delete "Summary" from title to read: "Process Acceptable Knowledge Report for Miscellaneous Operations at TA-55"	Clarification
Global	Change all occurrences of "Sampling Plan" to "AK Information Summary"	document title change
Note and 3rd column heading / p. vi	Delete "summary" from "NOTE" at top if page vi and from "*" note at bottom of page viii Change 3rd column heading on page vi to read:"Process AK Report*" Delete entire 4th column	Clarification
RCRA Constituents/ EPA Hazardous Waste Numbers / p. viii	In bullet beginning "D005 (barium)" add "D009 (mercury)" after "D008 (lead)" and add P/S codes DO, IX, and POSM Delete fourth and sixth bullets Add "*" after "D008" in bullet 5.	Per SME, P/S codes ACD, SL, POSM, DO and IX should all be assigned the same codes due to feed material may be in each P/S code. Bullets deleted as P/S codes moved to other bullets. Asterisk denotes "leaded gloves" was omitted.
Global search and delete / pp. 2 and 7	From all references to "process AK summary report," delete "summary" to read "process AK report. From all titles that previously read "Process Acceptable Knowledge Summary Report, " delete "Summary" to read "Process Acceptable Knowledge Report."	Clarification
4.2 / p. 21	In fourth paragraph, insert ", D009 (mercury)," after "D008 (lead) In fifth paragraph, insert "D005 (barium)," at the beginning	Report updated to reflect SME comments above
4.2 / p. 23	To the end of the second sentence in the next to last paragraph of section 4.2 add: and, therefore, carry the same P/S codes as ACD, IX, and SL (D005 [chromium], D006 [cadmium], D009 [mercury])	Report updated to reflect SME comments above

Attach. 3 / pp. 1 and 2 of 3	Insert "D009" in timeline for ACD; insert "D005, D006, D009" and add additional asterisk to "*D007" and "*D011" in timeline for DO; insert "D005" in timeline for IX; insert "D005, D006" in timeline for POSM; insert "D009" in timeline for SL; insert additional asterisk in first note; insert asterisk in note beginning "D008=" Add "D008" to DO and POSM timelines; Add "D009" ti IAM and POSM timelines; Add "*D008" to PX; Add "*" ti "*D006" in PX timeline	Updated to reflect SME comments above. Asterisks added due to typo errors found during review. Updated report due to typo errors found during review.
Attachment 4 / pp. 1, 2 and 3.	Add "*" to D008 in ACC, DO, IAM, IX, PI, POSM, RM, SL. Add "D009" to ACD, DO, IAM, SL Add "D005" to DO, IX, POSM Add "D006" to DO and POSM Add "D008" to DO, IAM, IX, POSM, SL Add "*D008" to PX, SB, VU Add "*D008" due to leaded gloves" in footnotes	Updated report due to typo errors found during review.
Attach. 6, pp. 1, 2	Add new Attachment 6 and update "Contents" page to reflect addition Add following paragraph to end of Section 2.0: "When discrepancies in AK information are discovered, they are documented and resolved in accordance with Acceptable Knowledge Documentation (TWCP-QP-1.1-021). The resulting documentation is found in Decision/Discrepancies Resolution Documentation (Attachment 6)."	New TWCP-QP-1.1-021 requirement

Date changes submitted: 02/12/02	**Desired effective date for changes**:

INTERIM CHANGE APPROVAL

Document Preparer: S Wander		Reviewer (if applicable): Facility Rep	
Signature: Sandy Wander	Date: 3/19/02	Signature: Wayne A. Dunigal	Date: 3/20/02
Site Project QA Officer: ~~not required for AK~~ MHGaul		LAAO (if implementing WAP requirements): NA	
Signature: MHGaul	Date: 3/21/02	Signature:	Date:
☑ IC Approved ☐ Major Rev. ☐ Hold for next Rev.		Do changes affect WAP data collection, data quality, or performance criteria?	
Site Project Mgr/Line Mgr: P Rogers			
Signature: Pamela Rogers	Date: 3/19/02	☐ Yes ☑ No	
USQ Screener (if applicable): NA		If yes, date of CBFO approval: _____ (documentation attached)	
Signature: [illegible]	Date: 3-25-02		

NOTE: Changes can be designated on the document and attached to this form.

Effective date for this interim change: 3/21/02

TA-55 PLUTONIUM FACILITY
ACCEPTABLE KNOWLEDGE REPORT

REPORT TITLE: Process Acceptable Knowledge ~~Summary~~ Report for Special Processing at TA-55

REPORT NUMBER: TWCP-AK-2.1-007,R.2 (LA-UR-01-2560)

WASTE GENERATED FROM PROCESS/STATUS CODES: ACC, ACD, DO, IAM, IX, PI, POSM, PPD, PX, RM, SB, SBB, SL, and VU

EFFECTIVE DATE: 05/18/01

NEXT REVIEW DATE: 05/18/03

DOCUMENT PREPARER:

John Musgrave — 5/7/01
NAME — DATE

APPROVALS:

Jim Fabryka-Martin — 5/7/01
INDEPENDENT TECHNICAL REVIEWER/EDITOR — DATE

Mavis R Lo — 5/10/01
SITE PROJECT MANAGER — DATE

Sandy Wander — 5/14/01
WASTE CERTIFICATION OFFICIAL — DATE

[illegible] — 5/14/01
SITE PROJECT QA OFFICER — DATE

Charles L. Fox — 5/7/01
FACILITY REPRESENTATIVE — DATE

© 2000, 2001 University of California

HISTORY OF REVISIONS

Revision No.	Date	Pages Revised	Reason for Change
0	05/04/00	—	New report (TWCP-03938)
1	12/04/00	All	Make report a controlled document and respond to CAR-00-036
2	05/18/01	All	To respond to CBFO reviewer comments and update with new AK information
2/IC1	03/21/02	Title page, vi, viii, 1, 2, 4, 5, 7, 21, 23, Att. 3 and 4	Clarification and update to include new information.

CONTENTS

Section **Page**

ACRONYMS iv

TA-55 PROCESS/STATUS (P/S) CODE INDEX vi

PROCESS ACCEPTABLE KNOWLEDGE SUMMARY vii

1.0 INTRODUCTION 1

2.0 METHODOLOGY USED TO SEARCH FOR AK RECORDS 1

3.0 DESCRIPTION OF THE PROCESS WASTE 3
- 3.1 Facility and Mission 3
- 3.2 Basis, Rationale, and Assumptions Used to Delineate the Waste Streams 3
- 3.3 Waste Physical Form and Content Description 4
- 3.4 Waste Volume and Time Period of Waste Generation 4
- 3.5 Waste Generation Processes 5
- 3.6 Material Inputs to the Waste Generation Processes 17

4.0 ASSIGNMENT OF EPA HAZARDOUS WASTE NUMBERS 21
- 4.1 F, K, and P Listings 21
- 4.2 Toxicity Listings 21

5.0 VERIFICATION THAT IGNITABLE, REACTIVE, AND CORROSIVE WASTES WERE EXCLUDED 24

6.0 VERIFICATION THAT INCOMPATIBLE CHEMICALS WERE PROHIBITED 25

7.0 VERIFICATION THAT THERE ARE NO COMPRESSED GASES, FREE LIQUIDS, NONRADIONUCLIDE PYROPHORICS, SEALED CONTAINERS GREATER THAN FOUR LITERS IN VOLUME, OR >1% RADIONUCLIDE PYROPHORICS 25

8.0 VERIFICATION THAT THERE ARE NO POLYCHLORINATED BIPHENYLS (PCBs) IN THE WASTE STREAM 26

9.0 CITED PROCEDURES AND REQUIREMENTS DOCUMENTS 26

Tables

1 Process Feed Materials for Special Processing 18
2 Average Isotopic Content of Plutonium Material Types and Enrichments 20
3 Chemical Inputs to Processes Described in This Report 22

Attachments

1 Acceptable Knowledge Roadmap (10 pages)
2 LANL and TA-55 Sites Maps (2 pages)
3 Timeline for Special Processing (3 pages)
4 Process Inputs and Outputs (3 pages)
5 Simplified Process Flow Diagram for Special Processing (1 page)
6 Decision/Discrepancies Resolution Documentation (1 page)

ACRONYMS

AK	acceptable knowledge
AK Information Summary	*Los Alamos National Laboratory Transuranic Waste Characterization Acceptable Knowledge Information Summary* (TWCP-PLAN-0.2.7-001,R.5)
CFR	*Code of Federal Regulations*
D	EPA hazardous waste number prefix for wastes with hazardous characteristics, defined in 40 CFR Subpart C, Sections 261.21 to 261.24
DL	discard limit
DOE	U.S. Department of Energy
DOR	direct oxide reduction
DTP	detailed technical procedure
DWLS	Discardable Waste Log Sheet
EPA	U.S. Environmental Protection Agency
ER	electrorefining
F	EPA hazardous waste number prefix for hazardous wastes from non-specific sources, defined in 40 CFR Subpart D, Section 261.31
HEPA	high-efficiency particulate air
HWN	hazardous waste number
K	EPA hazardous waste number prefix for hazardous wastes from specific sources, defined in 40 CFR Subpart D, Section 261.32
LANL	Los Alamos National Laboratory
MCDOR	multicycle direct oxide reduction
MSE	molten salt extraction
MT	material type
OSWER	Office of Solid Waste and Emergency Response (EPA)
P	EPA hazardous waste number prefix for acute hazardous waste defined in 40 CFR Subpart D, Section 261.33
PCB	polychlorinated biphenyl
PF-4	Plutonium Facility, Building 4
P/S [code]	process/status [code]
QA	quality assurance
QP	quality procedure
R&D	research and development
RCRA	Resource Conservation and Recovery Act
RLWTF	Radioactive Liquid Waste Treatment Facility
RMDC	Records Management/Document Control
SME	subject matter expert
SOP	safe/standard operating procedure
SP	special processing [designator for individual documents in special processing reports in Attachment 1, Acceptable Knowledge Roadmap]
TA	technical area
TCLP	toxicity characteristic leaching procedure
TRU	transuranic

TWCP	Transuranic Waste Characterization/Certification Project
UCNI	Unclassified Controlled Nuclear Information
WAC	waste acceptance criteria
WIPP WAC	*Waste Acceptance Criteria for the Waste Isolation Pilot Plant* (DOE/WIPP-069)
WIPP WAP	Attachment B, Waste Analysis Plan, to the *Hazardous Waste Facility Permit Issued to the Waste Isolation Pilot Plant* (EPA No. NM4890139088)
WIPP	Waste Isolation Pilot Plant
WODF	Waste Origination and Disposition Form
WPRF	Waste Profile Request Form

TA-55 PROCESS/STATUS (P/S) CODE INDEX

Note: This index indicates the main process AK report and report section that covers each P/S code mentioned in this report.

P/S Code	P/S Name	Process AK Report*
ACC	Ammonium Chloride Conversion	Special Processing
ACD	Cascade Dissolver	Special Processing
CA	Casting	Metal Operation Processes
CF	Cement Fixation	Nitrate Operations
DO	Dissolution of Oxide	Special Processing
EV	Evaporator	Nitrate Operations
HP	Cement Fixation	Nitrate Operations
IAM	Inspection and Measurement	Special Processing
IX	Ion Exchange	Special Processing
MA	Machining	Metal Operation Processes
PI	Preparation of Isotopes	Special Processing
POSM	Processing Out-of-Specification Material	Special Processing
PPD	Pu Pellet Dissolution	Special Processing
PX	Pyrochemical R&D	Special Processing
RM	Reduction to Metal	Special Processing
SB	Scrap Burning	Special Processing
SBB	Ca/Al Scrubbing RD&D	Special Processing
SE	Solvent Extraction	Chloride Operations
SL	Scrap Leaching	Special Processing
VU	Vessel Unloading	Special Processing
VUL	Vessel Unloading	Nitrate Operations

* Process AK reports: Chloride Operations (TWCP-AK-2.1-002,R.2), Metal Operation Processes (TWCP-AK-2.1-003,R.2), Nitrate Operations (TWCP-AK-2.1-005,R.2), Special Processing (this report)

PROCESS ACCEPTABLE KNOWLEDGE SUMMARY

Waste-generating process: Special Processing Operations

P/S codes: ACC, ACD, DO, IAM, IX, PI, POSM, PPD, PX, RM, SB, SBB, SL, and VU

Type of waste generated:

Retrievably stored and newly generated, mixed and non-mixed debris.

Site: LANL

Facility Mission (including defense and non-defense programs):

TA-55 has extensive capabilities for the extraction and recovery of plutonium from residues and scraps generated from operations at various LANL facilities and other DOE sites in the defense complex. The recovered plutonium is converted into pure plutonium feedstock. These manufacturing and recovery operations, as well as associated maintenance operations, and TA-55 plutonium research are the sources of TRU waste contaminated scrap, residues, and debris generated at TA-55. The scrap and residues are processed to recover as much plutonium as practicable before disposal. Wastes from special processing operations are generated from plutonium recovery and purification for defense and non-defense programs; these wastes are generated and produced in the same rooms and gloveboxes and so were not segregated until August 27, 1998.

Area(s) or building(s) where the process waste was generated (including operations carried out in those areas):

TA-55 Plutonium Facility, Building PF-4, rooms 209 and 401. Plutonium operations included preparing ultra-pure plutonium metals, alloys, and compounds; and reclaiming plutonium from scrap and residues produced by numerous feed sources.

Description of the process waste (physical form and typical content description):

Waste from special processing operations consists primarily of debris waste, including cellulose-based waste, plastic-based waste, rubber, metal debris, glass debris. Some waste was also sent to nitrate operations for cement fixation.

Summary Category Group: S3000, S5000

Waste Matrix Codes: S3100, S3200, S5100, S5300, S5400

Description of the waste-generating process:

The overall goal of the special processing operations is to recover plutonium from impure metal, metal alloys, scrap, and residues and produce a purified plutonium oxide product or purified plutonium metal. Processes include head-end ion exchange, metal preparation, separation and purification by precipitation, and pyrochemical operations.

Process feed:

Plutonium metal or metal alloys and oxides; pyrochemical salts; crucible pieces; anode heels; and ash.

Radioisotopic content of the waste:

Variety of plutonium material types with different well-defined isotopic compositions. Am-241, Np-237, and U-234 may be present at detectable concentrations as decay products of their plutonium precursors. Some of the processes separate plutonium and americium, or plutonium and uranium, so that the waste will usually be enriched in Am-241 or U-234, but may also be depleted in some cases. Pa-231 and Cs-137 may be present in trace amounts due to their widespread presence as contaminants in TA-55 operations.

RCRA Constituents/EPA Hazardous Waste Numbers:

- D005 (barium) and D008 (lead): P/S code VU
- D005 (barium), D006 (cadmium), D007 (chromium), D008 (lead), D009 (mercury), and D011 (silver): P/S codes ACD, DO, IAM, IX, POSM, SB (not D009), and SL.
- D006 (cadmium), D007 (chromium), D008 (lead), and D011 (silver): P/S code PX (zinc metal button)
- D006 (cadmium), D008 (lead), and D019 (carbon tetrachloride): P/S code PX because the salts, crucibles, and debris waste items discarded under this code may include some RCRA-regulated constituents above the toxicity characteristic limits
- D008* (lead): metal waste debris from all P/S codes in special processing, except ACD and PPD, due to disposal of leaded gloves; after May 1992, leaded gloves were separated from other metal debris
- No F, K or P codes

Process waste volume (if known):

Waste volumes for each P/S code have not been tracked. Instead, waste items are segregated into similar material types and packaged in waste containers. Waste containers are segregated into waste streams in the AK Information Summary, and waste stream volumes are reported in that document.

Years of generation for the process waste: 1980–present

PROCESS ACCEPTABLE KNOWLEDGE REPORT FOR SPECIAL PROCESSING AT TA-55

1.0 INTRODUCTION

All transuranic (TRU) waste must be sufficiently characterized and certified before it is shipped to the Waste Isolation Pilot Plant (WIPP). The U.S. Environmental Protection Agency (EPA) allows use of acceptable knowledge (AK) for waste characterization. EPA uses the term AK in its guidance document, *Waste Analysis at Facilities that Generate, Treat, Store and Dispose of Hazardous Waste.* Attachment B, Waste Analysis Plan, to the *Hazardous Waste Facility Permit Issued to the Waste Isolation Pilot Plant* (EPA No. NM4890139088) (WIPP WAP) defines AK and provides guidelines on how AK should be obtained and documented.

This process AK summary report was prepared in accordance with *Acceptable Knowledge Documentation* (TWCP-QP-1.1-021). The primary purpose of this report is to systematically organize, evaluate, and summarize detailed AK information about individual processes that generate TRU waste in the Plutonium Facility at Technical Area (TA)-55, one of the TRU waste generators at Los Alamos National Laboratory (LANL). By doing so, this report provides detailed technical support for several waste stream AK summary reports that include these process wastes.

2.0 METHODOLOGY USED TO SEARCH FOR AK RECORDS

The AK search for the information related to TA-55 waste streams resulting from special processing covered:

- Review of the *Los Alamos National Laboratory Transuranic Waste Characterization Acceptable Knowledge Information Summary* (TWCP-PLAN-0.2.7-001,R.5) (AK Information Summary) that includes information regarding all TRU waste streams

- Review of documents related to waste generation and waste management activities at TA-55 as listed on the Acceptable Knowledge Roadmap (Attachment 1)

- Interviews with personnel involved with waste generation and waste management at TA-55 as listed on the Acceptable Knowledge Roadmap (Attachment 1)

NOTE: Much of the AK information related to special processing is contained in Transuranic Waste Characterization/Certification Project (TWCP) Record No. TWCP-3543. Individual documents in this record have been assigned a separate identifier, SP-nn, where nn is a sequential 1- or 2-digit number. This referencing nomenclature is used throughout this report and its attachments.

- Analyses of individual processes generating waste, and evaluations of the potential for Resource Conservation and Recovery Act (RCRA)-regulated constituents to be

present in the process wastes, based on subject matter expert (SME) interviews and any relevant data

The TWCP Records Management/Document Control (RMDC) Center contains copies of the documents referenced in this report. Any Unclassified Controlled Nuclear Information (UCNI) is contained in these records, and will not be included in this report. Such records are identified as UCNI in the Acceptable Knowledge Roadmap (Attachment 1).

This process AK report is part of a set of closely related reports about TRU-waste generating activities at TA-55. For convenience in organizing AK for plutonium processing at this facility, the processes were categorized into six operational areas. The multiple processes in each area are described in detail in the following six process AK reports for plutonium:

- *Process Acceptable Knowledge Report for Chloride Operations at TA-55* (TWCP-AK-2.1-002)
- *Process Acceptable Knowledge Report for Metal Operation Processes at TA-55* (TWCP-AK-2.1-003)
- *Process Acceptable Knowledge Report for Miscellaneous Operations at TA-55* (TWCP-AK-2.1-004)
- *Process Acceptable Knowledge Report for Nitrate Operations at TA-55* (TWCP-AK-2.1-005)
- *Process Acceptable Knowledge Report for Pyrochemical Processes at TA-55* (TWCP-AK-2.1-006)
- *Process Acceptable Knowledge Report for Special Processing at TA-55* (TWCP-AK-2.1-007 [this report])

Each process AK report contains information on multiple individual processes that are assigned unique identifiers called process/status (P/S) codes. For example, special processing includes 14 individual processes that are each assigned a P/S code, as listed on the cover page of this report. The search and compilation of AK information was based on P/S code because that is the most detailed level of process information generally recorded in waste generation records. The process AK reports frequently cross-reference one another because P/S codes in one operational area often provide the material feed for P/S codes in another area. An index of P/S codes cited in this process AK report follows the list of acronyms; this index lists process descriptions and the primary process AK report in which that P/S code is discussed.

When discrepancies in AK information are discovered, they are documented and resolved in accordance with *Acceptable Knowledge Documentation* (TWCP-QP-1.1-021). The resulting documentation is found in Decision/Discrepancies Resolution Documentation (Attachment 6).

3.0 DESCRIPTION OF THE PROCESS WASTE

The following sections describe processes used in special processing, and identify the resulting wastes as well as outputs that are sent to other operations, such as nitrate operations, for further processing.

3.1 Facility and Mission

The TA-55 Plutonium Facility (Building PF-4) recovers plutonium from scrap and residues generated throughout the U.S. Department of Energy (DOE) defense complex, and processes it into pure plutonium oxide for conversion to metal and other products. A LANL site map and a detailed map of the buildings at TA-55, including Building PF-4, are shown in Attachment 2.

Most processes in special processing were solely defense related (TWCP-614, TWCP-4162). However, wastes from various processes were not always segregated by funding source, waste-generating process, or waste-generating location (e.g., room or glovebox) until recently (August 27, 1998), but rather were segregated and packaged based on waste type (TWCP-887, TWCP-4162, TWCP-4167) as well as material type. For example, plutonium material type MT-42 (enriched in Pu-242) has always been segregated from other wastes; this material type is exclusively defense-related. Similarly, plutonium material type MT-83 (enriched in Pu-238) is also segregated from other wastes; but this material type is not used solely for defense activities. Consequently, a single waste container often contains wastes from multiple processes. Some debris waste was also co-mingled with room trash related to these same operations (both defense and non-defense), and was initially boxed as low-level waste. Subsequently, some of these waste boxes were returned for disposal in drums as TRU waste when on-site radioassay results showed them exceeding the low-level discard limits (DLs) (TWCP-816).

3.2 Basis, Rationale, and Assumptions Used to Delineate the Waste Streams

The basis for delineation of TA-55 waste streams was established by the evolving set of LANL and TA-55 waste management plans and site-specific procedures, which date back to the start of operations at the Plutonium Facility in 1978 (TWCP-352, TWCP-697, TWCP-700, TWCP-701, TWCP-3943). The stated guidance and practice from the beginning, continuing to the present day, has been to handle and package all combustible and noncombustible debris waste in a similar fashion, regardless of the process (i.e., P/S code) of origin. Inspection, collection, documentation and packaging operations of solid, certifiable TRU wastes at TA-55 are conducted in PF-4 by a waste management section or team (TWCP-352, TWCP-700, TWCP-701, TWCP-3943). Wastes from all TRU waste-generating activities at TA-55 are handled and packaged into waste containers by this team based on the material content of the waste, without regard

to P/S code. Materials are considered waste only when they have been received and processed by the waste management team.

Assignment of a particular waste container to a waste stream is then made on the basis of waste generator information compiled in the AK Information Summary. Waste generator information is reviewed to identify the types and sources of waste items present in each drum, to evaluate the most appropriate waste summary group, waste matrix code, and potential for the presence of hazardous constituents. In the AK Information Summary, TA-55 wastes have been assigned to waste streams based on the waste segregation schemes used by TA-55:

- By radioisotope content (Pu-238 or Pu-239 material type)
- By material matrix (combustible, noncombustible, metal, glass, etc. waste types)
- By hazardous waste status (mixed, non-mixed, or special case waste streams)

3.3 Waste Physical Form and Content Description

Wastes generated during special processing, primarily debris wastes and wastes entered into the cement fixation process or sent to the Radioactive Liquid Waste Treatment Facility (RLWTF) at TA-50, are covered by this process AK report. General debris waste categories from special processing include

- Cellulose-based waste (for example, paper, cloth)
- Plastic-based waste (for example, gloves, tape, labware)
- Rubber
- Magnesium oxide crucibles
- Metal debris (for example, tantalum crucibles, wire, hose clamps, tools, labware)
- Glass debris

These debris items are contaminated with small amounts of radioactive and chemical substances from special processing.

3.4 Waste Volume and Time Period of Waste Generation

This report covers waste streams generated from 1980, when special processing first began in Building PF-4, to the present. Process wastes from special processing have different associated EPA hazardous waste numbers (HWNs) depending on the time period during which they were generated. The P/S codes, their time period of generation, and corresponding EPA HWNs are shown graphically in Attachment 3, Timeline for Special Processing.

Waste volumes for each P/S code have not been tracked. Instead, waste items are segregated into similar material types and packaged in waste containers. Waste containers are assigned to waste streams in the AK Information Summary, and waste stream volumes are reported in that document.

3.5 Waste Generation Processes

The following subsections describe the generation of waste by special processing, as well as product and waste outputs to other processes or operations.

Manufacturing and research operations performed at TA-55 in the production of plutonium also generate plutonium-contaminated scrap and residues. These residues are processed to recover as much plutonium as is practical. TA-55 has extensive capabilities for the extraction and recovery of plutonium from residues and scraps generated from operations at various LANL facilities and other DOE sites. These recovery and manufacturing operations, associated maintenance operations, and TA-55 plutonium research are the sources of TRU waste generated at TA-55.

Detailed background information about the TA-55 plutonium recovery processes can be found in *Waste from Plutonium Conversion and Scrap Recovery Operations* (TWCP-352 and TWCP-886).

This report focuses on special processing activities, which include the following:

- Head-end operations (P/S codes ACD, IAM, SB, and SL)
- Nitrate anion exchange (P/S code IX)
- Chloride anion exchange (P/S codes DO and POSM)
- Metal preparation (P/S codes PI and RM)
- Separation and purification by precipitation (P/S code DO)
- Pyrochemical operations (P/S codes PX and RM)
- Direct oxide reduction processes (P/S codes PX and RM)
- Molten salt extraction (P/S codes ACC, PX, and RM)
- Electrorefining (P/S codes PX, RM, and SBB)
- Pyroredox (P/S code PX)
- Plutonium pellet dissolution (P/S code PPD)

Each of these process categories is described below. Timelines for individual processes are presented in Attachment 3. A complete listing of P/S codes for special processing, their descriptions, feed materials, and inputs and outputs are found in Attachment 4. A simplified process flow diagram for special processing is found in Attachment 5.

3.5.1 Head-End Operations (P/S Codes ACD, IAM, SB, and SL)

Head-end operations involve incineration, calcination, leaching of noncombustible materials (including ash), conversion of pyrophoric metal and compounds to stable oxides, and dissolution. P/S code IAM is also classified as a head-end operation in this report because it involves inspection of scrap items from the vault to determine an appropriate disposition for them.

Combustible wastes are burned in a combustion chamber, and the ash is screened and the fines (<#12 sieve) are sent to the rotary calciner (P/S code RC, described in TWCP-AK-2.1-005) (TWCP-3543/SP-42). Rotary calciners remove incompletely oxidized organic material from some types of feed prior to leaching or dissolution in nitric acid (SP-5, SP-43 [both in TWCP-3543]). This treatment step is quite advantageous for the following reasons:

- Organic materials sometimes react vigorously when treated with strong nitric acid,
- Emulsions that form when nitric acid reacts with organic material impede plutonium recovery, and
- Some of the organic materials react in nitric acid to yield a dark mixture that in turn poisons the ion-exchange resin.

Glovebox operations and research and development (R&D) projects routinely generate non-plutonium scrap metal, glass, high-efficiency particulate air (HEPA) filters, tools, plastics, glovebox sweepings, sand, slag, crucibles, etc. Leaching in nitric acid and hydrofluoric acid, or pickling these materials in hydrochloric acid, is a relatively easy but incomplete decontamination method (SP-1, SP-2, SP-3, and SP-4 [all in TWCP-3543]).

Conversion of pyrophoric metals and compounds to stable oxides is usually done by calcination in a controlled oxygen atmosphere and at temperatures less than 600°C. Low-fired oxides are easier to dissolve in nitric acid (TWCP-3543/SP-42).

Dissolution of oxide prepares plutonium for purification by nitrate ion exchange processing and oxalate precipitation.

Under P/S code IAM, MT42 scrap items (gloves, ash, rags and other items that may contain RCRA-listed metals) were taken from the vault, visually inspected for material type, and remeasured by non-destructive assay. (MT42 is the designation for plutonium that is enriched in Pu-

242. See section 3.6.2 and Table 2.) If the Plutonium content was less than the DL, the items were discarded. Material that was not discardable, but was within specification, would be sent to P/S codes DO or SL for treatment or was returned to the vault. Out-of-specification material was sent to P/S code POSM for processing. Activities conducted under POSM are similar to those for P/S code DO (section 3.5.5).

3.5.2 Nitrate Anion Exchange (P/S code IX)

Nitrate anion exchange is the primary method used at LANL for the aqueous concentration of plutonium. The most commonly used ion exchange resin is a polyvinyl pyridine base macroporous-type resin. Information on the use of this method for processing plutonium material type MT 42 (see section 3.6.2 and Table 2), is provided in references SP-6, SP-7, SP-8, SP-9, SP-34 (all in TWCP-3543). Nitrate anion exchange for MT 52 is discussed in the nitrate operations process AK report (*Process Acceptable Knowledge Report for Nitrate Operations at TA-55* [TWCP-AK-2.1-005], section 3.5.3).

Nitrate anion exchange is a very powerful technique for recovery and separation of plutonium from most elements in the periodic table. At constant acidity, the amount of plutonium absorption onto the resin increases with nitrate concentration. Aluminum nitrate is added to the column to complex with fluoride and oxalate anions, which would otherwise complex with plutonium and prevent its full absorption onto the resin. The plutonium must be in the +IV oxidation state for absorption onto the column and, because plutonium can exist in five different oxidation states in aqueous solution, the oxidation state must be adjusted by careful selection of the sequence and type of reducing and oxidizing agents.

Major reducing and oxidizing agents used in plutonium production operations include hydroxylamine nitrate ($NH_2OH{\bullet}HNO_3$), ferrous ammonium sulfate [$Fe(SO_4)$ $(NH_4)_2SO_4{\bullet}6H_2O$], sodium nitrite ($NaNO_2$), urea [$CO(NH_2)_2$] and hydrogen peroxide (H_2O_2).

Ion exchange operations are typically divided into the following steps: (1) column conditioning, (2) feed oxidation state adjustment, (3) loading plutonium in nitric acid, (4) washing with 7 molar nitric acid, (5) elution with hydroxylamine nitrate, and (6) readjustment of the column from the low-acid elution step to 7–8 molar nitric acid for the next column run.

Effluents from nitrate ion exchange, when discardable, are sent to P/S code EV (part of nitrate operations), where they are reduced in volume by evaporation. Similar to waste from ion exchange processes in nitrate

operations (e.g., P/S codes DS and LR), these wastes may be contaminated with the heavy metals cadmium (D006), chromium (D007), lead (D008), mercury (D009), and silver (D011). The evaporator salts are sent to cement fixation (P/S code CF, also part of nitrate operations). The distillate is sent to the RLWTF at TA-50.

3.5.3 Chloride Anion Exchange (P/S codes DO and POSM)

Chloride salts are an important class of residues and are by-products of pyrochemical operations that are also important to Special Processing operations. In addition, plutonium must be recovered from the hydrochloric acid leach solutions employed during pickling (also conducted under P/S code DO). Chloride anion exchange is the method of choice for recovery of plutonium from these chloride-based processes (SP-14, SP-16, SP-30, SP-33, SP-34 [all in TWCP-3543]). Chloride anion exchange is a more recent innovation in Special Processing operations. It was probably implemented sometime in the early 1990s (TWCP-3543/SP-37). Prior to that, hydroxide precipitation was used and is discussed in the chloride operations process AK report (TWCP-AK-2.1-002,R.2, section 3.5.4).

Special Processing operations use chloride anion exchange to recover plutonium from salts produced by multicycle direct oxide reduction (MCDOR), molten salt extraction (MSE), electrorefining (ER), and pyroredox operations. The general chloride anion exchange process consists of the following steps: (1) dissolution of salt in 2-4 molar hydrochloric acid, (2) adjustment of plutonium oxidation state, chloride concentrations, and pH using 12 molar hydrochloric acid and sodium nitrite, (3) loading of feed solution onto the ion exchange column, (4) washing with 8 molar hydrochloric acid, (5) elution of plutonium from the column with 0.5 molar hydrochloric acid and 0.5 molar hydroxylamine hydrochloride, and (6) precipitation of plutonium oxalate by addition of solid oxalic acid. Chloride concentrations in the column eluant were measured by titration using silver nitrate and potassium dichromate until the end of 1992 when this method was replaced with a silver electrode.

Activities conducted under P/S code POSM are similar to those described above for P/S code DO. Feed materials to P/S code POSM are provided by P/S code IAM (section 3.5.1).

3.5.4 Metal Preparation (P/S codes PI and RM)

Conversion of plutonium to an oxide from scrap can be used as feed material for metal preparation (TWCP-3543/SP-17). The oxide compound is reduced to metal, often an impure form; however, the

oxide would not contribute RCRA-listed heavy metals to wastes produced during metal preparation (TWCP-3543/SP-44). In pyrochemical operations, several processes are used to convert this impure metal into high-purity metal.

3.5.4.1 Fluorides

Reactive plutonium oxides formed by calcination of oxalate or peroxide precipitates can be treated in a hydrofluorinator to form plutonium fluoride (PuF_4). In the hydrofluorination step, the oxide is treated with hydrogen fluoride (HF) or fluorine gas (F_2) to produce PuF_4. The PuF_4 is mixed with calcium metal, which in turn is heated to form calcium fluoride (CaF_2) and plutonium metal. Quite often, a catalyst (in this case iodine [I_2]) is added to initiate the reaction and to provide sufficient energy to ensure the reaction goes to completion. This method of metal preparation neither purifies the product metal, nor does it introduce many impurities. However, a high-purity oxide feed can produce metal that meets purity specifications for many applications. Wastes generated from this operation include magnesium oxide (MgO) sand, CaF_2, and MgO crucibles. These waste items are sent to leaching operations to recovery any plutonium. Subsequent wastes are discarded. Hydrofluorination at LANL was discontinued in the early 1990s. In the Special Processing operations, this activity was conducted under P/S code PI (SP-22, SP-23, SP-41 [all in TWCP-3543]).

3.5.4.2 Oxides

Metal scrap containing plutonium can be converted to plutonium oxide by burning it at elevated temperature in air. Reactive plutonium oxides can then be converted to plutonium fluoride for reduction to plutonium metal. Unreactive or high-fired plutonium oxide does not react to form plutonium fluoride; instead, the addition of a strong reducing agent in a solvent salt is required to produce plutonium metal from such oxide. The resulting impure metal forms a button in the bottom of the crucible that is covered by a fused oxide/salt layer. The button is removed mechanically from the salt. All residues containing plutonium in excess of the DL are sent to aqueous recovery.

3.5.5 Separation and Purification by Precipitation (P/S code DO)

The separation of plutonium from aqueous solutions makes use of many different precipitation reactions, the most common being reactions involving oxalate, peroxide, hydroxide, and fluoride anions (TWCP-352; SP-10, SP-11, SP-12, SP-13, SP-15, SP-16, SP-25, SP-43 [all in TWCP-3543]). Common reasons for conducting these precipitation reactions include the following:

- Relatively concentrated plutonium nitrate solutions can be largely or partially purified from many cationic impurities.
- Precipitation of plutonium (III) oxalate from very large volumes of nitrate anion-exchange eluates is a very quick and convenient concentration step.
- Calcination at 550°C can easily convert precipitated oxalates of plutonium (III) and plutonium (IV) to reactive plutonium oxide (PuO_2) suitable for hydrofluorination prior to metal preparation by calcium reduction.
- Some precipitated plutonium fluoride salts are suitable precursors for reduction to metal.
- Precipitation of plutonium and americium hydroxides from waste solutions such as oxalate or peroxide filtrates is an effective method to allow discard of the alkaline filtrate and recycle of the plutonium and americium in the separated solids. The hydroxide filtrate is discarded to the caustic waste line for treatment at the RLWTF at TA-50.

The following discussion summarizes the more important precipitation reactions and disposition paths for their filtrates (TWCP-352).

3.5.5.1 Plutonium (III) oxalate

Since the early days of the Manhattan Project, researchers have found it advantageous to produce large-particle-size precipitate because large grain sizes filter most readily. Plutonium (III) oxalate precipitation provides good separation from such impurities as aluminum (Al^{3+}), ferric iron (Fe^{3+}), and uranium oxide (UO_2^{2+}). Less separation is provided from calcium, potassium or sodium, and none from americium (III).

3.5.5.2 Plutonium (IV) oxalate

Plutonium (IV) oxalate is often quite fine-grained and gummy, but controlled addition of oxalic acid solution produces a coarse-grained precipitate that compares favorably with the best plutonium (III) oxalate precipitates. The higher acidity of plutonium (IV) oxalate gives better separation of Al^{3+}, Fe^{3+}, and UO_2^{2+} than does plutonium (III) oxalate.

3.5.5.3 Plutonium peroxide

Plutonium peroxide precipitate gives the best overall separation from cations; and, unlike the two oxalate precipitates, peroxide precipitation also gives excellent separation from Am-241. Plutonium peroxide is dissolved, reprecipitated as plutonium (III) oxalate, and calcined to provide plutonium oxide for plutonium metal production. Calcination of plutonium oxalate is more easily controlled than calcination of plutonium peroxide.

3.5.5.4 Plutonium hydroxide

Plutonium hydroxide precipitation is quite useful for producing a filtrate that can be discarded to final waste disposal. Oxalate and peroxide filtrates are frequently treated with sodium or potassium hydroxide to precipitate plutonium and Am-241 hydroxides and to destroy residual hydrogen peroxide. In addition, hydroxide precipitation is a good method for discarding spent chloride process solutions because alkaline solutions cause less corrosion of stainless steel. One potential problem with hydroxide precipitation is the generation of voluminous amounts of magnesium and calcium precipitates if pH is not carefully controlled.

3.5.5.5 Plutonium fluoride

Plutonium fluoride precipitation is not as common as precipitation of plutonium oxalate, peroxide, or hydroxide. The feedstock must be relatively pure because separation of plutonium from impurities is not as good for plutonium fluoride as for the other precipitation methods.

3.5.5.6 Disposition of oxalate and peroxide filtrates

Oxalate and peroxide filtrates cannot be sent directly to final waste management without further processing. Oxalate

filtrates cannot be directly processed by ion exchange because oxalic acid interferes with adsorption of plutonium onto the resin. Oxalate filtrates are evaporated to destroy the oxalate ion while reducing the volume of solution to be recycled through the ion exchange column (either nitrate or chloride ion exchange).

Both oxalate and peroxide filtrates are amenable to recovery of residual plutonium by hydroxide precipitation and subsequent disposal of the filtrate. The hydroxide cake can then be recycled to recover and purify the plutonium and americium if above the discard level, or can be discarded if these radionuclide concentrations are below the discard level.

3.5.6 Pyrochemical Operations (P/S codes PX and RM)

Pyrochemical operations for MT 42 (defined in section 3.6.2) include MCDOR with in-situ regeneration and electrorefining (P/S code RM) and MSE (P/S code RM), and oxide reduction (P/S code RM) (SP-17, SP-18, SP-19, SP-20, SP-21 [all in TWCP-3543]). Pyrochemical R&D efforts for MT 52 in the Special Processing area were done under P/S code PX. This included MCDOR with in-situ regeneration, electrorefining, pyroredox, preparation of $PuCl_3$ using chlorine gas and carbon tetrachloride, and MSE (SP-26, SP-27 SP-28, SP-29 [all in TWCP-3543]). Cadmium and lead were used occasionally as secondary solvent metals in P/S code PX.

3.5.7 Direct Oxide Reduction (DOR) Processes (P/S codes PX and RM)

3.5.7.1 Single-Pass DOR Process

Prior to the MCDOR process, a single pass DOR process was used for plutonium oxide (TWCP-2507, PYRO-14/TWCP-3542). Plutonium oxide and calcium metal are reacted in molten calcium chloride ($CaCl_2$) or $CaCl_2$ mixed with calcium fluoride (CaF_2), to produce plutonium metal. The reaction is conducted in a magnesium oxide (MgO) crucible at 820°C to 875°C. Any arsenic, mercury or selenium present in the impure plutonium oxide would be driven off due to their volatility at this high temperature (TWCP-1258). The reaction proceeds to completion when excess calcium is present and when sufficient $CaCl_2$ is available to dissolve the calcium oxide (CaO) product.

After cooling, a plutonium metal button is removed by breaking the crucible. A layer of salt above the button

contains unreacted oxide and calcium metal shot, which was sometimes recovered by addition of fresh salt plus additional calcium metal. The process was then rerun. If the unreacted oxide and metal shot did not process after the second run, the material was sent to aqueous recovery. The product plutonium metal contains significant impurities, including additional metal impurities derived from the calcium metal and calcium chloride reagents. It must be further purified by ER. The salt, remaining calcium metal, and MgO crucible pieces are sufficiently low in plutonium to be discarded directly as waste under P/S codes RM or PX. Salt that cannot be discarded as waste is routed through aqueous chloride operations (P/S code DO) to recover the plutonium. After May 1987, spent salts above the DL were sent to controlled oxidation to oxidize the pyrophoric metals. In any case, all DOR salts were oxygen sparged before disposal.

The feed oxide, reagent salts and reductant are of the highest purity available because the process is non-purifying. In fact, the plutonium metal produced from this operation is always less pure than the feed material due to impurities derived from the reductants. Plutonium metal from this process typically requires further processing to meet purity requirements.

3.5.7.2 MCDOR Process

To minimize the salt waste, the MCDOR process was started in 1988 (TWCP-2502, SP-25, SP-27, SP-39 [all in TWCP-3543]). In this process, the molten salt is regenerated by sparging the $CaCl_2$-CaO mixture with chlorine gas between multiple plutonium metal production runs. After approximately five cycles of metal production, the mixture is cooled and the salt and metal phases are separated. The salt is chlorinated and reused for MCDOR. The salt is discarded under P/S codes RM or PX if the plutonium concentration is below the DL. The salts above the DL are returned to P/S code DO for dissolution and recovery. Before 1987, the salts may have been discarded under P/S codes RM or PX or routed to chloride operations. The chlorine off-gas is passed through a caustic scrubber, with the caustic solution going to the RLWTF at TA-50 for disposal if the solution meets this facility's Waste Acceptance Criteria (WAC). If the solution does not meet the WAC, it is returned to P/S code DO for additional treatment.

MCDOR process inputs are low in contaminants. Only high-purity reagent chemical salts are used in the process, and the plutonium oxide feed materials are also of high purity, with absorbed water being the main impurity. MCDOR metal feed material analytical samples were analyzed for cadmium, chromium, lead, and silver. A review of 100 analyses showed that, even in the most impure sample, these D-listed toxicity characteristic metals were well below RCRA regulatory limits (TWCP-2540), as follows:

Metal	Totals Analysis	Calculated TCLP Result	Regulatory Level
Cadmium	<10 ppm	<0.5 mg/L	1 mg/L
Chromium	30 ppm	1.5 mg/L	5 mg/L
Lead	20 ppm	1 mg/L	5 mg/L
Silver	2 ppm	0.1 mg/L	5 mg/L

All metal impurities except barium would be reduced to the metal state and remain with the plutonium metal phase rather than be transferred into the molten salt phase. Hence, the molten salt phase is purified of regulated metals except for barium. These regulated metals will be present in the waste salt at levels below the toxicity characteristic levels. Because the salts are reused, only the initial reduction in fresh salt would contain any of the salt feed impurities.

The waste salt, crucibles, and debris waste items associated with this process are discarded under P/S codes DO, PX, or RM. Asbestos gloves were also used in glovebox operations under P/S codes RM or PX, and were disposed with ceramic and glass debris.

3.5.8 Molten Salt Extraction (P/S codes ACC, PX, and RM)

MSE is used to separate the more reactive elements such as rare earth elements, alkali metals, and alkaline earth metals, and americium from plutonium metal (TWCP-352, TWCP-3543/SP-19). This process is employed only if the americium content is greater than 1000 ppm. In the original process, which operated from 1980 to 1988, magnesium chloride ($MgCl_2$) was added to the impure plutonium metal in a tantalum crucible, covered with a mixture of sodium chloride and potassium chloride (NaCl/KCl), and then heated to 750 °C. Magnesium oxidized americium to americium chloride ($AmCl_3$), although some plutonium

was also converted to the chloride salt. In 1988, the MSE process was converted to use plutonium trichloride ($PuCl_3$) produced by in-situ chlorination. In the LANL process, 90 percent of the americium and 10 percent of the plutonium are transferred from the impure feed metal to the salt. After cooling, the salt and residual metal are mechanically separated. The salts are transferred to the aqueous chloride process under P/S code DO.

P/S code ACC was an experimental effort using ammonium chloride as a chlorinating agent to produce plutonium trichloride (SP-24/TWCP-3543).

3.5.9 Electrorefining (P/S codes PX, RM, and SBB)

The ER process was introduced in 1962 at TA-21 and was moved to TA-55 in 1979 under pyrochemical operations. This process was implemented as part of special processing in 1980. It takes impure metal from the MSE and MCDOR (DOR) processes and produces high purity plutonium metal (SP-18/TWCP-3543], TWCP-2505). Impure plutonium is cast as an anode, which is then placed in a magnesium oxide crucible with a salt mixture, a metal cathode (typically tungsten), and a seeding reagent that is $MgCl_2$ or $PuCl_3$ (TWCP-3543/SP-24, TWCP-2505). After the anode and salt melt, current is applied to the system, and plutonium at the anode is oxidized to plutonium ions, which travel to the cathode and are reduced back to the metal state. Impurities in the original plutonium anode that are less electroactive than plutonium (including cadmium, chromium, lead, and silver) remain in the anode, while impurities more electroactive than plutonium (including barium) are left in the molten salt. After cooling, the crucible is broken and the residues are physically separated from the high purity product metal. MT 42 anode heels are oxidized in P/S code RM, then are sent to aqueous recovery in P/S code DO. Salt and crucibles are sent for plutonium recovery under P/S code DO. MT 52 residues went to the vault. Salt may be stripped prior to going to P/S code DO.

In 1986 to 1989, secondary solvent metals such as cadmium, bismuth, lead, and gallium were added to experimental studies of the MT 52 electrorefining process (TWCP-3543/SP-29). The salts and crucibles from those ER runs may be contaminated with additional cadmium and lead, although those metals should have remained in the anode heels. However, these particular anode heels are retained in the vault at TA-55, with no plans to reprocess them in the near future. A pyroredox process was developed to recover plutonium from the anode heels, but it was mostly limited to demonstration runs.

The salt and crucible residues were discarded under P/S code PX when the plutonium content was sufficiently low. However, very little salt from this process met the DL. The salt typically contains up to eight percent of the feed plutonium and is treated by salt stripping to recover the plutonium under P/S code PX.

P/S code SBB was an R&D effort examining the feasibility of a DOR-like process for extracting plutonium from salt before discarding the salt. plutonium was chlorinated then reduced to the metal with calcium metal. The feed material for this process was salt containing plutonium MT 42.

3.5.10 Pyroredox (P/S code PX)

The pyroredox operation was developed to recover plutonium material type MT 52 from spent anode heels in the mid- to late-1980s (TWCP-2541). The anode heel was polished with calcium metal to remove surface oxide, then oxidized to plutonium (III) with zinc chloride ($ZnCl_2$) in molten KCl, forming plutonium chloride ($PuCl_3$). Elements easier to be oxidized than zinc (including barium) were oxidized into the salt phase, and the zinc formed a metal button. Any of the residual RCRA-regulated heavy metals that may have been present in the spent anode heel (barium, cadmium, chromium, lead, and silver), with the exception of barium, would be present in the zinc button. The salt was then mixed with calcium metal in $CaCl_2$ to reduce the plutonium to the metal phase, as well as reducing all elements easier to be reduced than calcium. The salt phase containing small amounts of the impurity barium was mechanically separated from the metal phase and discarded under P/S code PX. The metal phase containing zinc was placed in the vault or further treated (TWCP-2540), and the plutonium eventually was routed back to electrorefining (also conducted under P/S code PX). In the electrorefining process, the RCRA-regulated metals are concentrated in the anode heel, which then may be treated in the pyroredox process to transfer these RCRA metals to the zinc button, or may be roasted in air to form metal oxides and then be dissolved in nitrate operations. Thus, only the zinc button output could contain RCRA-regulated metals above the toxicity characteristic limits.

3.5.11 Plutonium Pellet Dissolution (P/S Code PPD)

Pu-238 pellets were dissolved in a combination of nitric and hydrofluoric acid (TWCP-3543/SP-45). The plutonium was precipitated as the oxalate using either oxalic acid or sodium oxalate. After digestion, the mixture was filtered to separate the solid plutonium oxalate. The oxalate was converted to the oxide by heating to 600 °C to 700 °C, then the oxide was heated with water vapor to about 800 °C to volatilize the residual ion fluoride as HF. The oxalate filtrate was treated with a

caustic solution to remove the plutonium by hydroxide precipitation. After subsequent filtration, the hydroxide cake was dried and sent to the vault. The hydroxide filtrate was discarded to the RLWTF at TA-50 if it met this facility's WAC or was recycled to filtration until it did meet the WAC. No organic solvents or heavy metals were used in the process.

3.6 Material Inputs to the Waste Generation Processes

Attachment 4 lists P/S codes for special processing at TA-55, including process descriptions, feed material, other process inputs, process outputs, and type of waste. The feed materials for special processing consist of the general types of materials listed in Table 1 that are obtained from the storage vault, as process output from other P/S codes, or from sources outside TA-55, including other DOE sites.

The remainder of this section summarizes the nature of the process waste in terms of its physical, chemical and radioisotopic characteristics.

3.6.1 Physical Waste Form Identification

Solid waste from special processing primarily consists of debris waste. Debris waste contains glassware, plastics, ceramic materials, paper, rags, HEPA filters, metal containers, brushes, and small tools. Leaded gloves may also be generated as process waste. Prior to 1987, leaded gloves were discarded in combustible and non-combustible waste streams. Between 1987 and May 1992, leaded gloves were segregated from combustible debris and discarded in the metal debris waste stream because of concern that explosive lead oxides might form if the combustible debris waste was incinerated. Since May 1992, leaded gloves have been routinely segregated from other metal debris waste and assigned to a separate leaded-glove waste stream. In addition, caustic solutions from hydroxide precipitation are discarded through the waste line to the RLWTF at TA-50.

Because items from several different processes are usually combined into individual waste drums, the physical waste form of each drum must be determined independently. This information is documented on a Waste Origination and Disposition Form (WODF) by the waste generator according to controlled procedures. The P/S code for each waste item is also documented on this form. In the packaging process, a standard form, the Discardable Waste Log Sheet (DWLS), was used to list each item and record its matrix material. This form was signed by the waste packager, reviewed, and approved by quality assurance (QA) personnel. Example forms for one drum of waste generated can be viewed in record TWCP-2513.

Table 1. Process Feed Materials for Special Processing

Feed Material	Potential Presence of RCRA-Regulated Substances	P/S Codes in Special Processing
Ash from P/S code SB	Usually suspect contaminated with Ba, Cd, Cr, Pb, and Ag (D005, D006, D007, D008, D011). As, Hg, and Se may also be present although these metals are volatilized at high temperatures if present in the oxide and chloride forms.	ACD, DO, SL
Crucible pieces (tantalum, magnesium oxide)	Typically fairly pure, no RCRA substances present	ACD, SL
Hydroxide cakes	Typically contaminated with RCRA-regulated heavy metals Cd, Pb, Hg, Ag and possibly Cr (D006, D008, D009, D011, and D007)	DO, POSM
Miscellaneous materials contaminated with Pu (e.g. sand, slag, tools, crucibles, metal, glass, plastic, labware, scrap, rags, glovebox sweepings)	Typically contaminated with RCRA-regulated heavy metals Cd, Pb, Hg, Ag and possibly Cr (D006, D008, D009, D011, and D007)	ACD, DO, SB, SL
Pu chlorides and fluorides (from P/S codes PI, PX, and RM)	Variable purity; may or may not contain RCRA-regulated substances	RM
Pu metal or metal alloy	High purity, no RCRA-regulated substances, unless noted otherwise	ACC (variable purity), PI (variable purity), PPD, POSM, RM, SB
Pu oxalates	Typically fairly pure, no RCRA substances present	SL
Pu oxides	Variable purity, suspect contaminated with RCRA-regulated heavy metals Cd, Cr and Pb (D006, D007, D008)	DO, PI, PX, POSM, RM
Pyrochemical salts	Typically fairly pure, no RCRA substances other than Ba (D005) are present	DO

3.6.2 Radionuclide Content Identification

The primary plutonium material type inputs for plutonium feed materials at Building PF-4 are listed in Table 2. The designation *material type* (e.g., MT 52) is used within the DOE Complex to describe the isotopic composition of common blends of radioactive materials used within the Complex. The material type notation was developed because it is a convenient way to describe material types that have very consistent isotopic compositions. Table 2 indicates the isotopic composition of the material types at the time the waste was characterized.

The material type provides the basis for estimating an upper bound for U-234, U-235, and Am-241 contents based on the rate of decay of their precursors, Pu-238, Pu-239 and Pu-241, respectively. The purpose of such bounding calculations is to provide a basis for identifying significant enrichment or depletion of one radionuclide versus another, based on radioassays of individual waste containers. The results of these calculations are also tabulated in Table 2. The calculations assume that (a) none of these isotopes were initially present in the material, (b) the oldest plutonium material in inventory dates back to 1 January 1960, and (c) the waste was packaged on 1 January 1996, making it 36 years old at that time (TWCP-698).

The material type used in the process generating each waste item was documented on the WODF and DWLS. However, some of the plutonium recovery processes separate plutonium and americium, or plutonium and uranium, so that their relative ratios may be altered in the process outputs and wastes. Waste items may be either depleted or enriched in Am-241 or U-234 depending on whether the source of contamination is the process product or the process residues (TWCP-882).

Residues submitted for reprocessing often contain Np-237, the decay product of Am-241 (half-life, 458 yr). This radioisotope is expected to be present in minor amounts in nearly all debris waste from special processing at TA-55.

In general, uranium and its isotopes are expected to be present only at trace levels, if at all. U-238 would only be present if purposefully added to the feed material. U-235 in growth from the decay of Pu-239 (half-life, 24,120 years) would be negligible due to the long half-life of Pu-239. Uranium-234 would be present in MT 83 as a decay product of Pu-238 (half-life, 87.74 years). After 20 years, 14.6 percent of the initial Pu-238 would have decayed to U-234. For MT 83 with an initial content of 83.89 percent Pu-238, the atomic ratio U-234 to total plutonium would be about 0.14. Pa-231 and Cs-137 may be present in trace

Table 2. Average Isotopic Content of Plutonium Material Types and Enrichments

Material Type (MT)	Plutonium Isotope (Wt.%) and Half-Life						Upper Bounds for Dimensionless Weight Ratios[a]		
	Pu-238 (87.74 yr)	Pu-239 (24120 yr)	Pu-240 (6564 yr)	Pu-241 (14.35 yr)	Pu-242 (376,300 yr)	Pu-244 (8.26 x 10^7 yr)	U-234/ Total Pu	U-235/ Total Pu	Am-241/ Total Pu
MT 51	0.006	96.77	3.13	0.076	0.018	—	1×10^{-5}	0.001	0.0006
MT 52	0.01	93.78	6	0.2	0.02	—	2×10^{-5}	0.001	0.002
MT 53	0.03	91.08	8.45	0.366	0.071	—	7×10^{-5}	0.0009	0.003
MT 54	0.046	87.42	11.5	0.81	0.22	—	0.0001	0.0009	0.007
MT 55	0.06	83.88	14.73	1.03	0.304	—	0.0002	0.0009	0.009
MT 56	0.061	81.9	16.51	1.18	0.355	—	0.0002	0.0009	0.01
MT 57	0.433	74.63	20.7	2.55	1.69	—	0.001	0.0008	0.02
MT 42									
84%	1.02	1.37	10.32	3.13	84.14	0.02	0.003	1×10^{-5}	0.03
90%	0.72	1.26	6.4	1.86	89.77	—	0.002	1×10^{-5}	0.02
95%	0.45	0.56	2.47	0.906	95.58	0.029	0.001	6×10^{-6}	0.008
MT 83									
83%	83.89	13.8	1.9	0.32	0.09	—	0.26	0.0002	0.003
89%	89.26	10.07	0.633	0.021	0.015	—	0.28	0.0001	0.0002

[a] These ratios are calculated under the assumption that no chemical fractionation occurs and, hence, are intended to be used to identify fractionation when it is present by comparing these upper bounds to radioassay data.

Source: TWCP-698

amounts because of their widespread presence as contaminants in TA-55 operations (TWCP-5164, TWCP-5165).

During TWCP characterization, the contents of each waste package undergo non-destructive analysis to provide detailed radioisotopic data. These data will be used to evaluate the accuracy of AK information in accordance with *Waste Characterization Data Reconciliation with Acceptable Knowledge* (TWCP-DTP-1.2-064). If warranted, this AK report will be updated to incorporate the results of these comparisons.

3.6.3 Chemical Content Identification

Chemical inputs to special processing are listed in Table 3. The use of strong acids, bases, or oxidizers does not result in RCRA listings for solid debris waste from these processes because of the absence of free liquids in this waste. However, D006, D007, D008, D011, and D019 apply to some of the process wastes generated by special processing, as noted in Table 3.

4.0 ASSIGNMENT OF EPA HAZARDOUS WASTE NUMBERS

The assignment of EPA HWNs to process wastes from special processing operations is summarized below, as well as on the process timelines in Attachment 3, and the table of process inputs and outputs in Attachment 4. These assignments take into account the possible presence of RCRA chemicals in process waste as a result of their suspected or known presence in feed materials, chemical inputs, equipment, and glovebox surfaces.

4.1 F, K, and P Listings

No F, K, or P listings apply to solid wastes generated from any of the special processing because no F-listed, K-listed, or P-listed chemicals were present in the feed materials, chemicals or equipment used in these processes.

4.2 Toxicity Listings

No D001 (ignitable), D002 (corrosive), or D003 (reactive) listings apply to solid wastes from special processing because no ignitable chemicals were used in these processes and because the solid wastes do not contain any free liquids (see Section 6.0).

D005 (barium) and D008 (lead) apply to P/S code VU.

D005 (barium), D006 (cadmium), D007 (chromium), D008 (lead), D009 (mercury), and D011 (silver) apply to P/S codes ACD, IAM, SB (not D009), and SL.

D005 (barium), D006 (cadmium), D007 (chromium), D008 (lead), D009 (mercury), and D011 (silver) apply to waste generated under P/S code IX.

Table 3. Chemical Inputs to Processes Described in This Report

Chemical Input	P/S Codes in Which RCRA-Listed Chemical Is Used	Comments on Applicability of RCRA HWNs (if any)
Gas		
Chlorine gas Fluorine gas Hydrogen fluoride gas		D001 and D002 do not apply to these gases, because there are no free liquids in this waste. Also the gas cylinders are outside the building, and the gases are plumbed into the glovebox.
Acids		
Hydrochloric acid Hydrofluoric acid Nitric acid Oxalic acid		D002 does not apply to the solid process waste because there are no free liquids in this waste
Bases		
Potassium hydroxide Sodium hydroxide		D002 does not apply to the TRU process waste because there are no free liquids in this waste
Metals		
Bismuth metal		
Cadmium metal	PX	D006
Calcium metal		
Gallium metal		
Lead metal	PX	D008
Inorganic Chemicals		
Aluminum nitrate Ammonium chloride Calcium chloride Calcium fluoride Ferrous ammonium sulfate Hydrogen peroxide Hydroxylamine hydrochloride Hydroxylamine nitrate Iodine Magnesium chloride Magnesium oxide (sand and crucibles) Potassium chloride		
Potassium dichromate	DO	D007 until end of 1993. Used in P/S code DO as titration endpoint until end of 1993. Solution and precipitates then processed by hydroxide precipitation under same code. Hydroxide cakes (in which chromium would be present) sent to P/S code POSM. Ultimately, chromium ends up in the solution sent to P/S code EV, from which residue gets sent to cement fixation.
Silver nitrate	DO, POSM	D011 until end of 1993. Used in P/S code DO for chloride titration until end of 1993. Solution and precipitates then processed by hydroxide precipitation under same code. Hydroxide cakes (in which silver would be present) sent to P/S code POSM. Ultimately, silver ends up in the solution sent to P/S code EV, from which residue gets sent to cement fixation.

Chemical Input	P/S Codes in Which RCRA-Listed Chemical Is Used	Comments on Applicability of RCRA HWNs (if any)
Sodium chloride Sodium nitrite Sodium oxalate Zinc chloride		
Organic Chemicals		
Carbon tetrachloride Urea	PX	D019. F002 does not apply because carbon tetrachloride was used as a chlorination reagent.

D006 (cadmium), D008 (lead), and D019 (carbon tetrachloride) apply to salt, crucible and debris waste generated P/S code PX.

D006 (cadmium), D007 (chromium), D008 (lead), and D011 (silver) are assigned to the zinc metal waste produced from P/S code PX. In the ER process, these RCRA-regulated heavy metals concentrate in the anode heel, which then may be treated in the pyroredox process (P/S code PX) to transfer them to the zinc button, or may be roasted in air to form metal oxides and then be dissolved in nitrate operations. Thus, only the zinc button output could contain RCRA-regulated metals above the toxicity characteristic limits.

D006 (cadmium), D008 (lead), and D019 (carbon tetrachloride) apply to P/S code PX, as the salts, crucibles, and debris waste items discarded under this code may include some RCRA-regulated metal residues above the toxicity characteristic limits. Carbon tetrachloride was used as a chlorination reagent in this P/S code from April 1988 until July 1989.

D007 (chromium) and D011 (silver) apply to P/S codes DO and POSM. Potassium dichromate and silver nitrate were used in P/S codes DO and POSM for chloride titrations from 1990 until the middle of 1993. Solution and precipitates were then processed by hydroxide precipitation under the same code and, therefore, carry the same P/S codes as ACD, IX, and SL (D005 [barium], D006 [cadmium], and D009 [mercury]). Hydroxide cakes (in which chromium and silver would be present) were sent to P/S code POSM for additional processing. Ultimately, chromium and silver end up in the solution sent to P/S code EV, from which the residue gets sent to cement fixation.

D008 (lead) applies to metal waste from all P/S codes in special processing, except for P/S codes ACD and PPD. Prior to 1987, leaded gloves were not segregated from combustible debris. Between 1987 and May 1992, they were segregated and discarded in the metal debris waste stream. Since May 1992, they have been routinely segregated and assigned to a leaded-glove waste stream, still under the originating P/S code (TWCP-4166).

5.0 VERIFICATION THAT IGNITABLE, REACTIVE, AND CORROSIVE WASTES WERE EXCLUDED

According to the WIPP WAP, "The prohibition of liquids and containerized gases prevents the shipment of corrosive, ignitable, or reactive wastes." Administrative controls on waste packaging were in place at various times to ensure the absence of such items from the waste stream.

- Liquids were prohibited from solid waste streams at TA-55 when the facility opened in January 1978. A waste management procedure written to cover operations at the new facility, *TA-55 Standard Operating Procedure (SOP) 406-GEN-R00*, stated that "Liquids are not permitted in any container of solid waste materials" (TWCP-3943).

- Chemical Waste Disposal Requests introduced in June 1980 included checkboxes that the waste generator was required to check if the waste contained corrosive acids or bases, or pyrophoric, flammable, corrosive, explosive, toxic, carcinogenic or highly reactive materials.

- The Certification Plan (TWCP-697) and related Generator Attachments (TWCP-701) were implemented in 1987. Waste generators were required to sign a statement on the WODF documenting that the waste contained "no free liquids, pyrophorics, explosives, compressed gases, powders or materials other than the indicated matrix." Checkboxes were also present for indicating the presence or absence of corrosive chemicals. Full implementation of this generator statement occurred in May 1987.

- Waste management inspectors perform visual verification of the waste prior to its initial packaging, thus allowing the inspectors to verify the generator's WODF statement (TWCP-701, Sections 3.8.5 to 3.8.6).

- In addition to the above-mentioned prohibitions on explosives in wastes, explosives were prohibited from TA-55 until installation of the Impact Test Facility in the early 1990s. Explosives continue to be banned in the solid waste streams up to the present time. If a misfire should occur, the requirement is to destroy the unspent powder by burning (TWCP-4720).

- The Waste Profile Request Form (WPRF), which has been in use at LANL since 1991, includes a statement which must be authenticated by the waste generator, that the waste is not ignitable (flash point >200 °F), reactive, or corrosive.

- The TA-55 Generator Attachments to the Certification Plan were updated in 1995 (TWCP-700) but the prohibition on liquids in the solid waste, and the waste management inspection, remained in effect.

Hence, since the inception of operations at TA-55, corrosive and reactive wastes have been excluded from TA-55 solid wastes through the prohibition of liquids.

The absence of these prohibited items is verified through radiography of each waste container and visual examination of selected containers during TWCP characterization activities. These data will be used to assess the accuracy of AK information in accordance with *Reconciliation of Visual Examination and Radiography Information* (TWCP-QP-1.1-028). Any free liquids are remediated, or the container is tagged as non-compliant by filing a Prohibited Waste Report in accordance with *Nonconformance Reporting and Tracking* (TWCP-QP-1.1-007).

6.0 VERIFICATION THAT INCOMPATIBLE CHEMICALS WERE PROHIBITED

Section 5.0 summarizes administrative controls in place at TA-55 that prohibit incompatible chemicals in the waste, and measures taken to verify their absence. In addition, all waste containers shipped from TA-55 to TA-54 for storage were evaluated for potentially incompatible chemicals in accordance with 49 *Code of Federal Regulations* (CFR) Subpart C—Segregation and separation chart of hazardous materials; Section 177.848, Segregation of hazardous materials, and were determined to be in compliance with this requirement.

7.0 VERIFICATION THAT THERE ARE NO COMPRESSED GASES, FREE LIQUIDS, NONRADIONUCLIDE PYROPHORICS, SEALED CONTAINERS GREATER THAN FOUR LITERS IN VOLUME, OR >1% RADIONUCLIDE PYROPHORICS

Most gases used at the TA-55 Plutonium Facility are stored outside the building and the gas is plumbed into the glovebox from outside the building (TWCP-4164). Occasionally, a lecture bottle may have been used for a process inside the building, but these bottles were kept outside of the glovebox with the gas plumbed into the glovebox. Consequently, compressed gas cylinders or containers are not expected to be in any of the TRU wastes generated by TA-55 operations.

Spray cans, especially WD-40, were in common use in TA-55 gloveboxes until May 1992 (TWCP-4166). These were routinely discarded as metal debris waste. From 1988 until May 1992, the protocol was to vent or puncture the spray cans inside the glovebox; venting was indicated by inserting a metal wire into the valve. After May 1992, spray cans were no longer used in gloveboxes.

For items of pyrochemical salt waste, the procedures of oxygen sparging and/or carbonate oxidation have been used since May 1987 to ensure that pyrophorics were oxidized. In addition, screening tests on similar pyrochemical salts and residues (which contain higher amounts of plutonium) at the Rocky Flats Environmental Technology Site (TWCP-2501) have shown (1) no autoignition, (2) no spontaneous combustion, (3) and no sparking. Experimental results on the reactivity of LANL DOR salt with water and the reactivity in air of heated calcium metal nodules from DOR salts indicate the absence of "dangerous when wet materials" and pyrophoricity in these salts (TWCP-3730, TWCP-3731, TWCP-3732).

Verification that individual waste drums do not contain compressed gases, free liquids, or sealed containers greater than 4 L in volume is obtained from radiography of each waste containers and visual examination of selected containers during TWCP characterization activities. Any free liquids are remediated, and any sealed containers greater than 4 L in volume, or unpunctured or unvented gas containers, are removed; or else the container is tagged as non-compliant by filing a Prohibited Waste Report in accordance with *Nonconformance Reporting and Tracking* (TWCP-QP-1.1-007). For administrative controls on the prohibition of pyrophorics, see Sections 5.0 and 6.0.

8.0 VERIFICATION THAT THERE ARE NO POLYCHLORINATED BIPHENYLS (PCBs) IN THE WASTE STREAM

No PCBs were introduced into special processing, based on documentation in TA-55 procedures reviewed during the AK investigation and summarized in the process inputs listed in Table 1, Table 3, and Attachment 4. Oils used in the reviewed processes include vacuum pump oils, and cutting fluids used for cooling purposes; none of these oils are known to contain PCBs. All transformers known to contain PCBs have been tracked from the time of startup of TA-55 in 1978. Whenever any transformer oil is drained, it is handled by a subcontractor who is wholly responsible for its disposal (TWCP-AK-2.1-005,R.2, Section 8.0). This oil does not enter the LANL disposal operations.

9.0 CITED PROCEDURES AND REQUIREMENTS DOCUMENTS

- 40 CFR Part 261, Subpart C—Characteristics of hazardous waste, Sections 261.21 (*Characteristic of ignitability*), 261.22 (*Characteristic of corrosivity*), 261.23 (*Characteristic of reactivity*), and 261.24 (*Toxicity characteristic*)
- 40 CFR Part 261, Subpart D—Lists of hazardous waste, Sections 261.31 *(Hazardous wastes from non-specific sources),* 261.32 *(Hazardous wastes from specific sources),* and 261.33 *(Discarded commercial chemical products, off-specification species, container residues, and spill residues thereof)*
- 49 CFR Subpart C—Segregation and separation chart of hazardous materials. Section 177.848, *Segregation of hazardous materials*
- *Acceptable Knowledge Documentation* (TWCP-QP-1.1-021)
- *Nonconformance Reporting and Tracking* (TWCP-QP-1.1-007)
- *Records Management* (TWCP-QP-1.1-004)
- *Reconciliation of Visual Examination and Radiography Information* (TWCP-QP-1.1-028)
- *Waste Acceptance Criteria for the Waste Isolation Pilot Plant* (DOE/WIPP-069)

- *Waste Analysis at Facilities that Generate, Treat, Store and Dispose of Hazardous Waste* (EPA/OSWER 9938.4-03)
- Waste Analysis Plan, Attachment B to the *Hazardous Waste Facility Permit Issued to the Waste Isolation Pilot Plant* (EPA No. NM4890139088)
- *Waste Characterization Data Reconciliation with Acceptable Knowledge* (TWCP-DTP-1.2-064)

ACCEPTABLE KNOWLEDGE ROADMAP

Waste Stream: P/S Codes ACC, ACD, DO, IAM, IX, PI, POSM, PPD, PX, RM, SB, SBB, SL, and VU.

Copies of these documents are in the TWCP RMDC Center. Refer to Records Management (TWCP-QP-1.1-004) for information on obtaining copies.

TWCP Record No.	Information Category Code	Information	Source	Summary	Limitations
TWCP-352	B	Description of plutonium recovery processes	*Wastes from Plutonium Conversion and Scrap Recovery Operations,* LA-11069-MS, March 1988.	Document describes the plutonium residues and the various treatment approaches used in recovering plutonium from scrap	Document does not give information about RCRA constituents introduced or present in the processes
TWCP-614	D	All TA-55 waste is defense related	Memo from Doug Sankey.	All TA-55 waste is defense related	None
TWCP-697	C	Waste management requirements to meet WIPP WAC requirements were formalized in 1984.	*Los Alamos TRU Waste Certification Plan for Newly Generated TRU Waste,* WCP-HSE7-CPL-01, R.2 (November 1984)	Waste management requirements to meet WIPP WAC requirements. Generator Attachments were used to describe and reference specific generator procedures.	Overview document - Generator Attachments provide more detailed information.
TWCP-698	B	Gives Material Type compositions	NMT Memo, NMT-7 WM/EC-96-032 Benchmark Environmental Corp. Memo, AL-7193 BEC	Gives Material Type compositions	Does not give information on how material may fractionate in TA-55 waste processes.
TWCP-700	C	*Attachment 3 to the Los Alamos TRU Waste Certification Plan for Newly Generated TRU Waste,* R05	*NMT-7 Attachment, January 1995,* TRUWM-TA55-CPA-03,R00	Documents controls to meet WIPP WAC were implemented and how independent verification was accomplished.	Information is not extremely detailed.
TWCP-701	C	*TA-55 Generator Attachment* to the *TRU Waste Certification Plan for Newly Generated TRU Waste*	*TA-55 Attachment, 1987,* TRU-MST12-CPA-03,R00	Documents controls to meet WIPP WAC were implemented and how independent verification was accomplished.	Information is not extremely detailed.

* Information Category Codes: A = forms intended for use in waste certification, B = data from controlled databases and published documents, C = unpublished data, and D = interviews, memos, and letters

TWCP Record No.	Information Category Code	Information	Source	Summary	Limitations
TWCP-816	D	Jim Foxx Interview on Number of Layers of Packaging	C.L. Foxx, Los Alamos National Laboratory	Waste was co-mingled with room trash, and was initially boxed as low-level waste. Subsequently, some of these waste boxes were returned for disposal in drums as TRU waste when on-site radioassay results showed them exceeding the low-level DLs.	None
TWCP-882 (UCNI)	D	Secondary Radionuclides and Toxic Metals in TA-55 TRU Waste	Memo from Jim Foxx	Lists additional radionuclides and metals potentially in waste, subdivided by process status code. Covers time period from 1978 to present.	Best information available, but it is based on worker recollection because other records are not available.
TWCP-886	C	Color Flow Diagram of Pu-processes at TA-55.	Diagram from Jim Fixx	Indicates that process inputs are thermally treated and that heavy metals from process inputs end up in the nitric acid evaporator bottoms.	Does not indicate solvent input to processes.
TWCP-887	D	Co-mingling of Defense and Non-Defense TRU Waste	Memo from Jim Foxx	Wastes generated from defense and non-defense activities were not segregated at TA-55 through 1997	None
TWCP-1258	B	"Waste Determination Report for Waste Stream TA-55-43, Lot No.1"	LANL internal report	Table B-1 lists the decomposition and vaporization temperatures of Hg, Se, and As and their oxides and chlorides.	None
TWCP-2501	B	"Backlog Waste Reassessment Baseline Book, Waste Form 34"	Rocky Flats Environmental Technology Site Report 1995	Page WF34-10 contains results of tests for corrosivity	Tests were conducted on residues rather than on waste.

* Information Category Codes: A = forms intended for use in waste certification, B = data from controlled databases and published documents, C = unpublished data, and D = interviews, memos, and letters

TWCP Record No.	Information Category Code	Information	Source	Summary	Limitations
TWCP-2502	D	"Acceptable Knowledge Personnel Interview Form" for Waste Stream TA-55-39 (pyrochemical salts) and P/S codes MP, OR, SS, PX, ER, and RM	Jim Foxx, NMT-7	Answers to miscellaneous questions on pyrochemical processes.	Not a good overview
TWCP-2505 (UCNI)	C	Procedure for Plutonium Electrorefining (P/S SS)	TA-55 Document, 432-MPP-R08	Contains materials used in the process	No RCRA analyses documents
TWCP-2507 (UCNI)	C	Procedure for Direct Oxide Reduction (P/S code OR)	TA-55 Document, 426-MPP-R05	Contains materials used in the process	No RCRA analyses documents
TWCP-2513	A	Example of Generator Reports for Drum 54856	TA-55 Records Management Center	Example of generator records including WPRF #07045 and WODF form showing the waste generator certification statement.	Older forms are often hard to read.
TWCP-2540 (UCNI)	A	Answers to Questions about pyrochemical Processes	Jim Foxx, NMT-7-WM/EC-99-118	Also contains old records of analysis of DOR salts	
TWCP-2541 (UCNI)	C	Procedure for Pyroredox Processing of Spent Electrorefining Anodes (P/S RA)	TA-55 Document, 460-MPP-R00	Contains materials used in the process	No RCRA analyses documents
TWCP-3542 (UCNI) (PYRO-14)	C	Procedure for Reduction of PuO2 to Metal, 700g Scale (P/S code OR)	TA-55 Document, 420-MPP-R05	Contains materials used in the process	No RCRA analyses documents
TWCP-3543 (SP-1) (UCNI)	C	Procedure for Pickling, Leaching, and Dissolution (P/S SL)	TA-55 Document, 209-MPP-R00-R01	Contains materials used in the process	No RCRA analyses documents
TWCP-3543 (SP-2) (UCNI)	C	Procedure for Pickling or Surface Leaching (P/S SL)	TA-55 Document, 211-MPP-R00-R04	Contains materials used in the process	No RCRA analyses documents

* Information Category Codes: A = forms intended for use in waste certification, B = data from controlled databases and published documents, C = unpublished data, and D = interviews, memos, and letters

TWCP Record No.	Information Category Code	Information	Source	Summary	Limitations
TWCP-3543 (SP-3) (UCNI)	C	Procedure for Stirred Tank Leaching of Bulk Solids (P/S SL)	TA-55 Document, 240-MPP-R00-R07	Contains materials used in the process	No RCRA analyses documents
TWCP-3543 (SP-4) (UCNI)	C	Procedure for Distillation of Lean Plutonium Solutions (P/S SL)	TA-55 Document, 241-MPP-R01-R08	Contains materials used in the process	No RCRA analyses documents
TWCP-3543 (SP-5) (UCNI)	C	Procedure for Rotary Calcination of Scrap (P/S SB)	TA-55 Document, 220-MPP-R08	Contains materials used in the process	No RCRA analyses documents
TWCP-3543 (SP-6) (UCNI)	C	Procedure for Oxalate Precipitation of Plutonium From Nitrate Solutions (P/S IX)	TA-55 Document, 215-MPP-R01	Contains materials used in the process	No RCRA analyses documents
TWCP-3543 (SP-7) (UCNI)	C	Procedure for Oxalate Precipitation of Ion Exchange Eluates (P/S IX)	TA-55 Document, 216-MPP-R01-R08	Contains materials used in the process	No RCRA analyses documents
TWCP-3543 (SP-8) (UCNI)	C	Procedure for Nitrate Ion Exchange (P/S IX)	TA-55 Document, 219-MPP-R01-R07	Contains materials used in the process	No RCRA analyses documents
TWCP-3543 (SP-9) (UCNI)	C	Procedure for Transfer of Waste-Acid Solution (P/S IX)	TA-55 Document, 236-MPP-R00-R06	Contains materials used in the process	No RCRA analyses documents
TWCP-3543 (SP-10) (UCNI)	C	Procedure for Dissolution of Various Residue Materials in Hot Nitric Acid or Hydrochloric Acid (P/S DO)	TA-55 Document, 212-MPP-R01-R06	Contains materials used in the process	No RCRA analyses documents
TWCP-3543 (SP-11) (UCNI)	C	Procedure for Conversion of Plutonium Oxalate to Oxide (P/S DO)	TA-55 Document, 213-MPP-R01-R09	Contains materials used in the process	No RCRA analyses documents
TWCP-3543 (SP-12) (UCNI)	C	Procedure for Oxalate (IV) Precipitation (P/S DO)	TA-55 Document, 214-MPP-R01-R07	Contains materials used in the process	No RCRA analyses documents
TWCP-3543 (SP-13) (UCNI)	C	Procedure for Peroxide Precipitation (P/S DO)	TA-55 Document, 217-MPP-R01	Contains materials used in the process	No RCRA analyses documents

* Information Category Codes: A = forms intended for use in waste certification, B = data from controlled databases and published documents, C = unpublished data, and D = interviews, memos, and letters

TWCP Record No.	Information Category Code	Information	Source	Summary	Limitations
TWCP-3543 (SP-14) (UCNI)	C	Procedure for Dissolving Chloride Portion of Electrorefining Residues (P/S DO)	TA-55 Document, 226-MPP-R00	Contains materials used in the process	No RCRA analyses documents
TWCP-3543 (SP-15) (UCNI)	C	Procedure for Hydroxide Precipitation (P/S DO)	TA-55 Document, 230-MPP-R01-R08	Contains materials used in the process	No RCRA analyses documents
TWCP-3543 (SP-16) (UCNI)	C	Procedure for Oxalate Precipitation of Plutonium from Hydrochloric Acid Solutions (P/S DO)	TA-55 Document, 232-MPP-R01-R03	Contains materials used in the process	No RCRA analyses documents
TWCP-3543 (SP-17) (UCNI)	C	Procedure for Oxidation of Plutonium Metal and Alloys (P/S RM)	TA-55 Document, 222-MPP-R00-R02	Contains materials used in the process	No RCRA analyses documents
TWCP-3543 (SP-18) (UCNI)	C	Procedure for Electrorefining of Plutonium Metal (P/S RM)	TA-55 Document, 258-MPP-R00-R05	Contains materials used in the process	No RCRA analyses documents
TWCP-3543 (SP-19) (UCNI)	C	Procedure for Molten Salt Extraction and Liquidation (P/S RM)	TA-55 Document, 262-MPP-R00-R04	Contains materials used in the process	No RCRA analyses documents
TWCP-3543 (SP-20) (UCNI)	C	Procedure for Salt Stripping of Electrorefining Salts (P/S RM)	TA-55 Document, 264-MPP-R00-R02	Contains materials used in the process	No RCRA analyses documents
TWCP-3543 (SP-21) (UCNI)	C	Procedure for Spent DOR Salt Regeneration (P/S RM)	TA-55 Document, 425-MPP-R00	Contains materials used in the process	No RCRA analyses documents
TWCP-3543 (SP-22) (UCNI)	C	Procedure for Hydrofluorination in the Special Isotope Preparation Line (P/S PI)	TA-55 Document, 290-MPP-R02-R03	Contains materials used in the process	No RCRA analyses documents
TWCP-3543 (SP-23) (UCNI)	C	Procedure for Small Scale Bomb Reduction (P/S PI)	TA-55 Document, 291-MPP-R00-R01	Contains materials used in the process	No RCRA analyses documents

* Information Category Codes: A = forms intended for use in waste certification, B = data from controlled databases and published documents, C = unpublished data, and D = interviews, memos, and letters

TWCP Record No.	Information Category Code	Information	Source	Summary	Limitations
TWCP-3543 (SP-24) (UCNI)	C	Procedure for Chlorination of Plutonium Compounds with Ammonium Chloride (P/S ACC)	TA-55 Document, 292-MPP-R00	Contains materials used in the process	No RCRA analyses documents
TWCP-3543 (SP-25) (UCNI)	C	Feed Preparation for +4 Oxalate Precipitation (P/S DO)	TA-55 Document, 210-MPP-R02	Contains materials used in the process	No RCRA analyses documents
TWCP-3543 (SP-26) (UCNI)	C	Procedure for Chlorination of Plutonium Compounds (P/S PX)	TA-55 Document, 224-MPP-R00	Contains materials used in the process	No RCRA analyses documents
TWCP-3543 (SP-27) (UCNI)	C	Procedure for Multiple-cycle Direct Oxide Reduction (P/S PX)	TA-55 Document, 251-MPP-R00-R05	Contains materials used in the process	No RCRA analyses documents
TWCP-3543 (SP-28) (UCNI)	C	Procedure for Breaking Press Operation (P/S PX)	TA-55 Document, 253-MPP-R00	Contains materials used in the process	No RCRA analyses documents
TWCP-3543 (SP-29) (UCNI)	C	Procedure for Solvent Anode Electrorefining (P/S PX). Also referenced in Pyrochemical Processes as PYRO-15/TWCP-3542)	TA-55 Document, 434-MPP-R00	Contains materials used in the process	No RCRA analyses documents
TWCP-3543 (SP-30) (UCNI)	C	Purifying and Recovery of Plutonium by Chloride Anion Exchange (P/S DO)	TA-55 Document, 273-CLO-R02, R03, R04	Contains materials used in the process	No RCRA analyses documents
TWCP-3543 (SP-31) (UCNI) add to Att. 4	C	Procedure for Vessel Handling (P/S VU)	TA-55 Document, 201-MPP-R01, R02, R05-R07	Contains materials used in the process	No RCRA analyses documents
TWCP-3543 (SP-33) (UCNI)	C	Procedure for Precipitation of Plutonium (III) Oxalate in Hydrochloric Acid (P/S code DO)	TA-55 Document, 242-MPP-R00-R01	Contains materials used in the process	No RCRA analyses documents

* Information Category Codes: A = forms intended for use in waste certification, B = data from controlled databases and published documents, C = unpublished data, and D = interviews, memos, and letters

TWCP Record No.	Information Category Code	Information	Source	Summary	Limitations
TWCP-3543 (SP-34) (UCNI)	C	Procedure for Leaching of Non-combustible Materials in Nitric Acid (P/S IX or NC)	TA-55 Document, 235-MPP-R00	Contains materials used in the process	No RCRA analyses documents
TWCP-3543 (SP-37) (UCNI)	D	Acceptable Knowledge Interview Form for Special Processing	Jim Foxx, NMT-7 1/19/00	SME review of Special Processing AK Report	Addresses specific questions
TWCP-3543 (SP-38) (UCNI)	D	Acceptable Knowledge Interview Form for Special Processing	Jim Foxx, NMT-7 2/3/00	Answers to questions about P/S code PPD and to MT42 waste volume	Addresses specific questions
TWCP-3543 (SP-39) (UCNI)	D	Procedure for Direct Oxide Reduction R&D	TA-55 Document 422-MPP-R00	Contains materials used in the process	No RCRA analyses documents
TWCP-3543 (SP-41) (UCNI)	C	Procedure for Generation of 242PuF6	TA-55 Document 122-LPN-R00	Contains materials used in the process	No RCRA analyses documents
TWCP-3543 (SP-42) (UCNI)	C	Procedure for Burning of Combustibles in Head-End Operations	TA-55 Document, 221-MPP-R00	Contains materials used in the process	Contains no chemical list: no chemicals used. No P/S code
TWCP-3543 (SP-43) (UCNI)	C	Alternate Procedure for Dissolution of Oxide Derived from Calcination of Oxalate	TA-55 Document, 448-REC-R00	Contains materials used in the process, mineral acids used	No chemical list: no P/S code
TWCP-3543 (SP-44) (UCNI)	D	Acceptable Knowledge Interview Form for Special Processing	Jim Foxx, NMT-7 8/2/00	Answer to question as to whether plutonium metal, pure or impure, is a contributor of RCRA-listed metals	Addresses specific questions
TWCP-3543 (SP-45) (UCNI)	D	Acceptable Knowledge Interview Form for Special Processing	Jim Foxx, NMT-7	Answer to questions regarding P/S codes PPD, RAP2, SBB and SCB	Addresses specific questions
TWCP-3730 (UCNI)	B	Pyrophoricity characterization	Characterization of Direct Oxide Salts (LA-CP-95-0098)	Hydrogen generation and pyrophoricity of DOR salts. Also gives reference for MSE, ER, and Cr-containing salts.	None

* Information Category Codes: A = forms intended for use in waste certification, B = data from controlled databases and published documents, C = unpublished data, and D = interviews, memos, and letters

TWCP Record No.	Information Category Code	Information	Source	Summary	Limitations
TWCP-3731	D	Sodium pyrophoricity in pyrochemical salts	Memo (MST-12-ARO-88-052)	Treatment of sodium in salts is effective	Sodium only
TWCP-3732	C	Experimental data on calcium pyrophoricity in salts	Memo (MST-12-ARO-88-077)	Treatment of calcium in salts is effective	Calcium only
TWCP-3943	B	Procedure for Waste Management at TA-55	TA-55 Document, 406-GEN-R00	Contains information on waste management procedures in 1978	None, but doesn't address today's waste management concerns
TWCP-4162	D	Answers to questions about P/S codes PB, PuBe, CC, MB, MS, FF, BF, and other issues	Interview with Jim Foxx, 10/12/00	Answers to questions on use of asbestos at TA-55, non-defense activities, and specific P/S codes in chloride operations.	None
TWCP-4164	D	Answers to questions about various P/S codes	Interview with Jim Foxx, 10/16/00	Answers to questions on use of Ag, disposal of ash and resins, and use of gases.	None
TWCP-4166	D	Answers to questions about P/S codes DO, EV, HP, CF, OR, RM, PY	Interview with Jim Foxx, 10/17/00	Answers to questions on use of Cr and Ag, RCRA metals in cement, asbestos in furnaces and gloves, and disposal of spray cans used in gloveboxes.	None
TWCP-4167	D	Answers to questions about segregation of non-defense wastes; leachability of Ag from ash	Interview with Jim Foxx, 10/18/00	Segregation of non-defense wastes began on 27 August 1998; analytical data show that Ag in ash is below limits of regulatory concern	None
TWCP-4720	B	Describes the procedure to be taken at TA-55 in the event of a misfire or unconsumed explosives (from the Impact Test Facility 40-mm gun, P/S codes ITF and ITF4) to ensure that explosives do not enter the waste stream	40-mm Powder Breech Project Waste Management Plan, Rev. 2 (issued March 27, 2000)	Procedure to be taken at TA-55 in the event of a misfire or unconsumed explosives (from the Impact Test Facility 40-mm gun) to ensure that explosives do not enter the waste stream	Does not appear to be a controlled document. Without revision history, cannot tell when this document was first issued, and how the potential for unconsumed explosives was addressed when the Impact Test Facility (ITF) began in 1996

* Information Category Codes: A = forms intended for use in waste certification, B = data from controlled databases and published documents, C = unpublished data, and D = interviews, memos, and letters

TWCP Record No.	Information Category Code	Information	Source	Summary	Limitations
TWCP-5164	D	Sources of Cs-137 and Pa-231 in TA-55 TRU waste	Interview with Jim Foxx (TA-55 SME) on April 2, 2001	Plutonium operations never handled Cs-137 or Pa-231 in any of the Pu processing areas at TA-55. However, Cs-137 is expected to be present in the wastes because it is a fission product of several Pu isotopes. Pa-231 is expected to be present (as a function of the age of the waste) because it is a decay chain daughter of Pu-239 and U-235.	None
TWCP-5165	D	Sources of Cs-137, Pa-231, and Cm-244 in TA-55 TRU waste	Interview with Jim Foxx (TA-55 SME) on April 11, 2001	Dominant source of Cs-137 expected to be due to residual contamination from original separation of Pu from production fuel. Cm-244 introduced in P/S code DOP starting in 1988, but could also show up after that date in IS, WE, CA and CF.	None
TWCP-AK-2.1-002,R.2	A	*Process Acceptable Knowledge Report for Chloride Operations at TA-55*	Generators interview and TWCP AK references	Detailed information on each P/S code for chloride operations at TA-55	None
TWCP-AK-2.1-003,R.2	A	*Process Acceptable Knowledge Report for Metal Operations at TA-55*	Generators interview and TWCP AK references	Detailed information on each P/S code for metal operations at TA-55	None
TWCP-AK-2.1-004,R.2	A	*Process Acceptable Knowledge Report for Miscellaneous Operations at TA-55*	Generators interview and TWCP AK references	Detailed information on each P/S code for miscellaneous operations at TA-55	None
TWCP-AK-2.1-005,R.2	A	*Process Acceptable Knowledge Report for Nitrate Operations at TA-55*	Generators interview and TWCP AK references	Detailed information on each P/S code for nitrate operations at TA-55	None

* Information Category Codes: A = forms intended for use in waste certification, B = data from controlled databases and published documents, C = unpublished data, and D = interviews, memos, and letters

TWCP Record No.	Information Category Code	Information	Source	Summary	Limitations
TWCP-AK-2.1-006,R.2	A	*Process Acceptable Knowledge Report for Pyrochemical Operations at TA-55*	Generators interview and TWCP AK references	Detailed information on each P/S code for pyrochemical operations at TA-55	None
TWCP-PLAN-0.2.7-001,R.5	C	*Los Alamos National Laboratory Transuranic Waste Characterization AK Information Summary*	LANL TA-55 waste management database, LANL TA-54 TRU waste management database, and TWCP AK reference base on generator's original data	Detailed information on each waste drum and waste stream	None

* Information Category Codes: A = forms intended for use in waste certification, B = data from controlled databases and published documents, C = unpublished data, and D = interviews, memos, and letters

MAP OF LANL

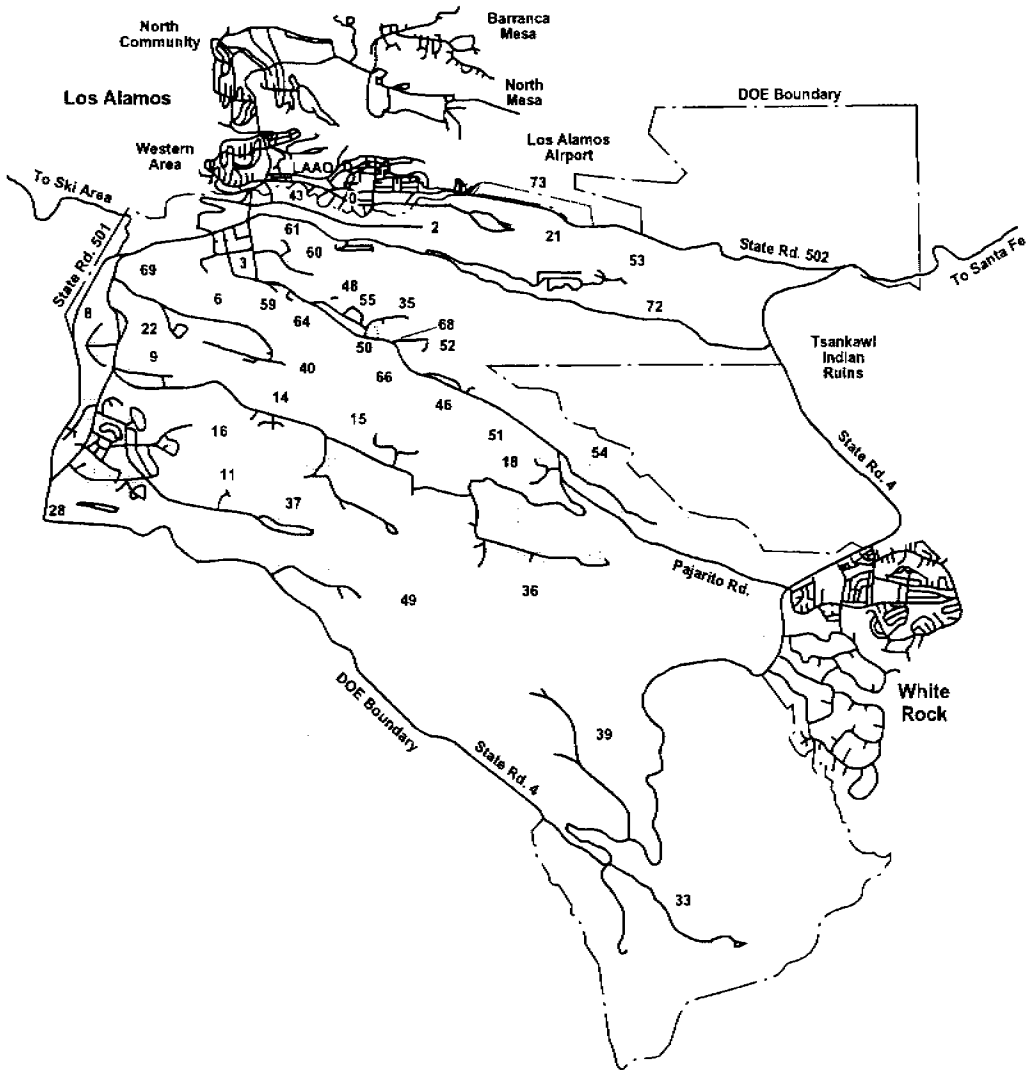

Technical Area Locations

TA-0	Unassigned Land Reserve
TA-2	Omega Site
TA-3	South Mesa Site
TA-5	Beta Site
TA-6	Two Mile Mesa Site
TA-8	Anchor Site West
TA-9	Anchor Site East
TA-11	K-Site
TA-14	Q-Site
TA-15	R-Site
TA-16	S-Site
TA-18	Pajarito Laboratory
TA-21	DP-Site
TA-22	TD-Site
TA-28	Magazine Area A
TA-33	HP-Site
TA-35	Ten Site
TA-36	Kappa Site
TA-37	Magazine Area C
TA-39	Ancho Canyon Site
TA-40	DF-Site
TA-41	W-Site
TA-43	Health Research Lab & DOE Headquarters
TA-46	WA-Site
TA-48	Radiochemistry Site
TA-49	Frijoles Mesa Site
TA-50	Waste Management Site
TA-51	Radiation Exposure Facility
TA-52	Reactor Development Site
TA-53	Meson Physics Facility
TA-54	Waste Disposal Site
TA-55	Plutonium Facility Site
TA-57	Fenton Hill Site
TA-58	Two Mile North Site
TA-59	OH-Site

MAP OF TA-55

Note: The Plutonium Facility, Building PF-4, is labeled PF-4 on this map

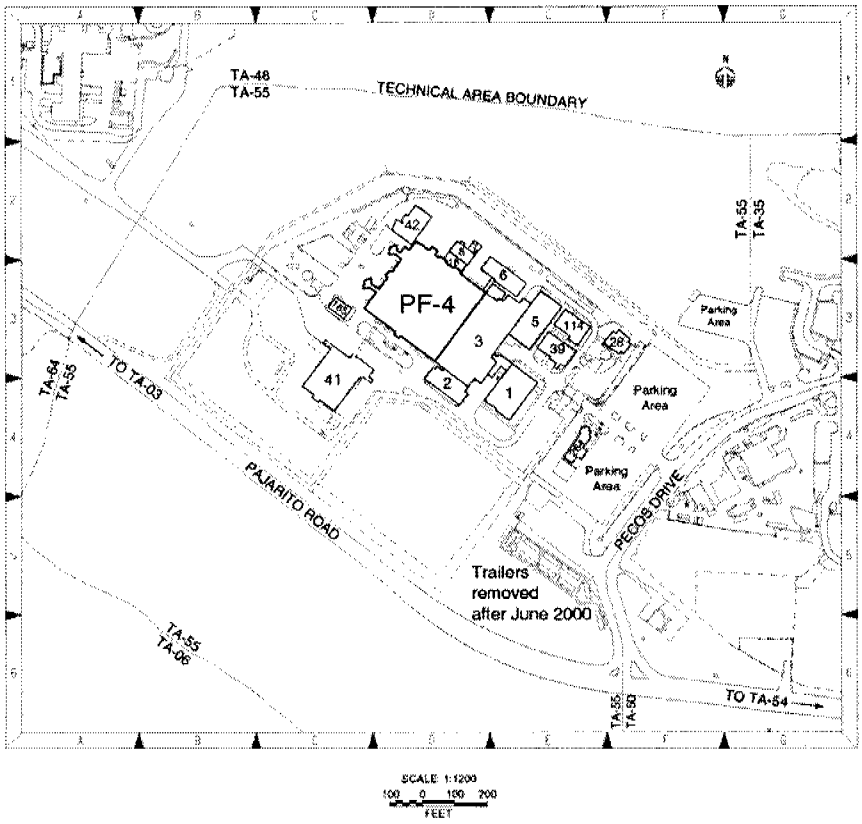

TIMELINE FOR SPECIAL PROCESSING

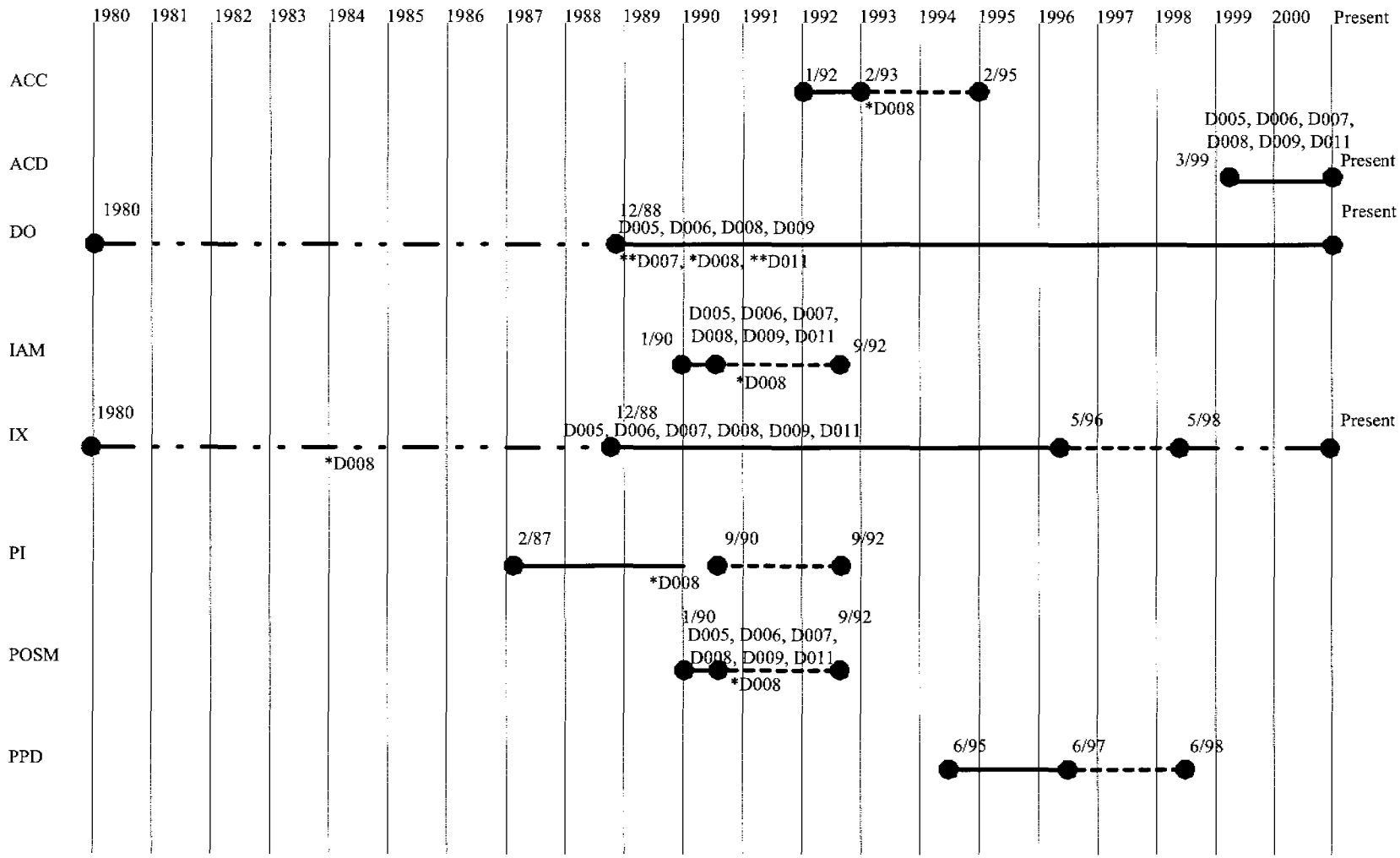

TIMELINE FOR SPECIAL PROCESSING (continued)

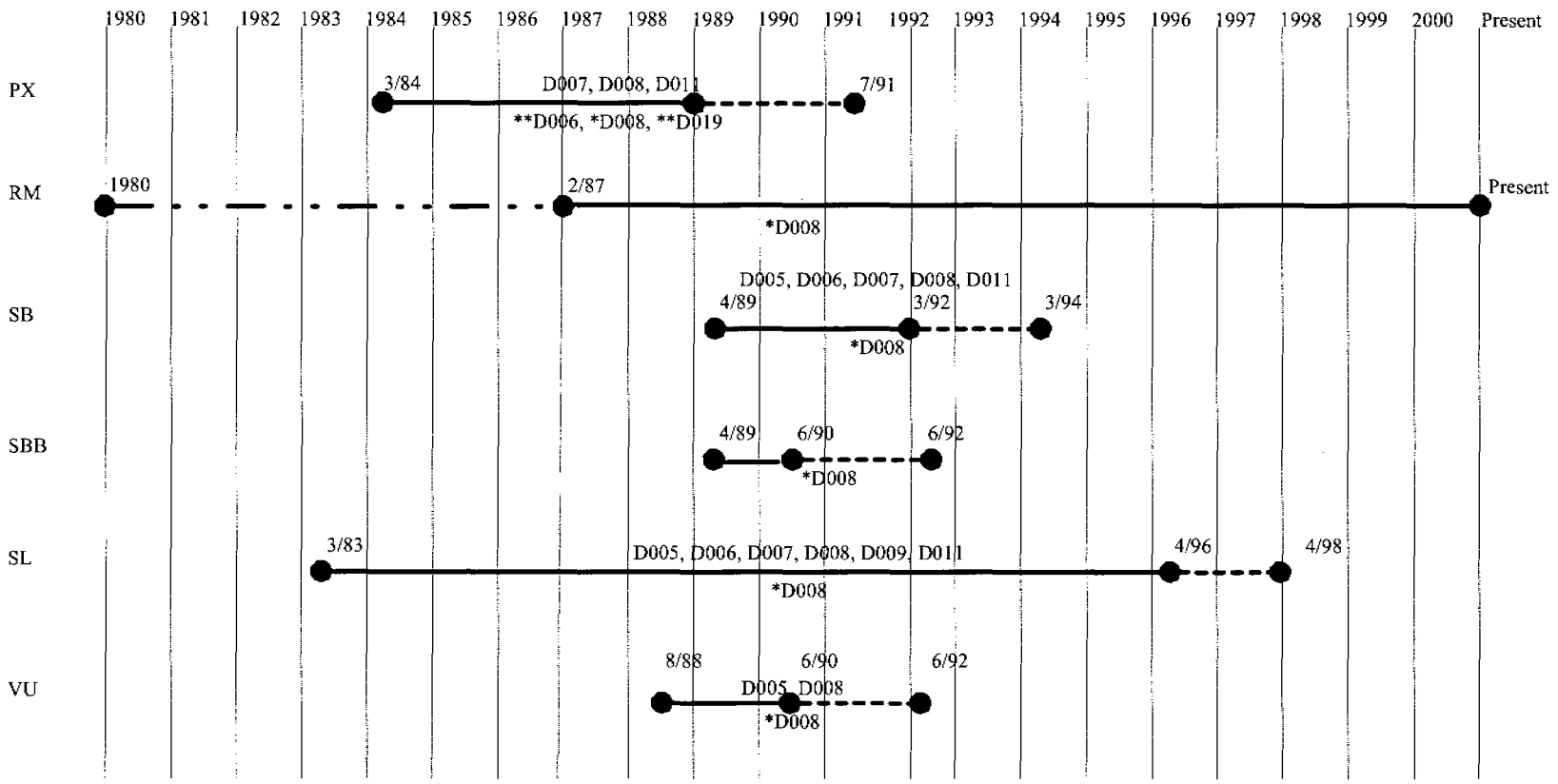

*D008 = applies to leaded gloves. Prior to 1987, leaded gloves were not segregated from combustible debris. Between 1987 and May 1992, they were segregated and discarded in the metal debris waste stream. Since May 1992, they have been routinely segregated and assigned to a leaded-glove waste stream, still under the originating P/S code (TWCP-4166).

**Notes on time-dependence of EPA HWNs
D006 = applies to P/S code PX from 02/87 to 07/89
D007 = applies to P/S code DO from 1990 to mid-1993
D011 = applies to P/S code DO from 1990 to mid-1993
D019 = applies to P/S code PX from 04/88 to 07/89

TIMELINE EXPLANATION

The P/S code is established either in the P/S diagrams and/or in the procedures designating the start and end dates.

Extrapolate out two (2) years beyond the last revision date for the procedure to next possible review date.

Dates for which a process is known to have been in operation based on Subject Matter Expert input, but no procedures exist nor is there a P/S code for this time period.

PROCESS INPUTS AND OUTPUTS

P/S Code	P/S Title	Process Inputs		Process Outputs		EPA Codes[2]	References[3]
		Feed Stream(s)	Chemicals/Reagents	Product	Waste Stream[1]		
ACC	Ammonium Chloride Conversion	plutonium metal (varying purity)	Ammonium chloride	plutonium trichloride to P/S RM	rags, tools, labware, gloves	*D008	TWCP-3543 (SP-24)
ACD	Cascade Dissolver	plutonium scrap; plutonium contaminated tools, crucibles, metal items, and labware; labware; tools	Hydrofluoric acid, hydrochloric acid, nitric acid	plutonium lean leach solution to P/S IX, some material to vault	leached tools, crucibles, metal items, and labware to discard	D005, D006, D007, D008, D009, D011	None
DO	Dissolution of Oxide	plutonium oxide (varying purity); plutonium scrap; plutonium contaminated tools, crucibles, salt, metal items, and labware, filtrates from oxalate precip in P/S IX, hydroxide cake from DO, solutions with solids	Nitric acid, hydrochloric acid, sodium hydroxide, potassium hydroxide, calcium fluoride, hydrofluoric acid, oxalic acid, hydroxylamine hydrochloride	Some material to vault. Hydroxide precip filtrate to caustic waste line. Hydroxide cake to DO or vault. Isotopically out-of-spec material to P/S code IAM or POSM. Plutonium lean leach solution to P/S IX.	Leached tools, crucibles, salt, metal, labware, spent ion exchange resins to discard.	D005, D006, D007, D008, *D008, D009, D011	TWCP-3543 (SP-10, SP-11, SP-12, SP-13, SP-14, SP-15, SP-16, SP-25, SP-30, SP-33, SP-37, SP-43)
IAM	Inspection and Measurement	Material from P/S code DO, RM, other P/S codes.	No chemicals used.	Out-of-spec material to P/S code POSM. In-spec material to P/S DO, SL, or vault.	Discardable items to WM	D005, D006, D007, D008, *D008, D009, D011	None
IX	Ion Exchange	Leach solutions from P/S codes DO and SL.	Nitric acid, hydroxylamine nitrate, sodium nitrite, aluminum nitrate, calcium fluoride, hydrofluoric acid, oxalic acid, ferrous ammonium sulfate, urea, hydrogen peroxide	Plutonium dioxide to P/S code RM. Filtrates to P/S DO. Washes and effluents off ion exhange columns DL to P/S code EVDL back through IX	Labware. Spent ion exchange resins to discard	D005, D006, D007, D008, *D008, D009, D011	TWCP-3543 (SP-6, SP-7, SP-8, SP-9, SP-34)

P/S Code	P/S Title	Process Inputs		Process Outputs		EPA Codes[2]	References[3]
		Feed Stream(s)	Chemicals/Reagents	Product	Waste Stream[1]		
PI	Preparation of Isotopes	Plutonium dioxide, impure plutonium metal	Fluorine gas, hydrogen fluoride gas, calcium metal, iodine	Plutonium metal to originating P/S code	Slag and crucible to vault or discard. Tools, labware, rags, gloves to discard	*D008	TWCP-3543 (SP-22, SP-23, SP-41)
POSM	Processing Out-of-Specification Material	Out-of-spec plutonium scrap, hydroxide cakes	Nitric acid, sodium hydroxide, potassium hydroxide	Plutonium to vault	Ion exchange resins, hydroxide filtrate to caustic waste; labware, gloves, tools, rags to discard	D005, D006, D007, D008, *D008, D011	None
PPD	Pu Pellet Dissolution	Pu pellet	Nitric acid, hydrofluoric acid, oxalic acid, sodium oxalate, sodium hydroxide, potassium hydroxide	Pu oxide to 238-Pu operations; Hydroxide cake to vault	Labware, gloves, rags to discard	None	TWCP-3543 (SP-38)
PX	Pyrochemical R&D	Pu oxide feed	Calcium metal, MgO crucibles, mineral acids, calcium chloride, sodium chloride, potassium chloride, carbon tetrachloride, cadmium metal, lead metal, gallium metal, bismuth metal	Pu metal to P/S CA, salts and crucible to vault or discard, anode residue to vault, spent hardware leach solution to P/S code SE.	Labware, gloves, rags to discard	D006, D007, D008, *D008, D011, D019	TWCP-3543 (SP-26, SP-27, SP-28, SP-29)
RM	Reduction to Metal	Pu oxide or metal from various P/S's DO, CA, MA, vault.	Calcium metal, calcium chloride, sodium chloride, potassium chloride, chlorine gas	Pu metal (high purity) to P/S CA. Out-of-spec to P/S POSM or vault. Reprocess material to P/S DO. Salt and crucibles to P/S DO or discard. Labware, tools to P/S DO if >DL or to discard if <DL.	Covered in column to right	*D008	TWCP-3543 (SP-17, SP-18, SP-19, SP-20, SP-21, SP-44)

P/S Code	P/S Title	Process Inputs		Process Outputs		EPA Codes[2]	References[3]
		Feed Stream(s)	Chemicals/Reagents	Product	Waste Stream[1]		
SB	Scrap Burning	Pu scrap from various P/S codes.	No chemicals used	Calcinced scrap to P/S code SL	Gloves <DL to discard	D005, D006, D007, D008, *D008, D011	TWCP-3543 (SP-5, SP-43)
SBB	Ca/Al Scrubbing RD&D	Pu samples from P/S codes OR or SS	Calcium metal, aluminum metal, calcium chloride, sodium chloride, potassium chloride, chlorine gas	Vault. Salt, crucibles > discard limit to vault.	Salt, crucibles <DL discard. Tools labware, rags, and gloves to discard.	*D008	None
SL	Scrap Leaching	Pu scrap, other scrap metals, labware, gloves	Nitric acid, hydrofluoric acid, hydrochloric acid	Lean leach solution to P/S IX	Leached items to discard	D005, D006, D007, D008, *D008, D009, D011	TWCP-3543 (SP-1, SP-2, SP-3, SP-4)
VU	Vessel Unloading	Vessels	WD-40 Vacuum grease Silicon adhesive Pneumatic tool oil	Vessel residues	Metal and wire debris	D005, D008, *D008	TWCP-3543 (SP-31)

[1]All P/S codes generate routine laboratory debris waste. For those P/S codes that generate only debris waste, this column is left blank. The debris waste may consist of glassware, plastics, ceramic materials, paper, rags, HEPA filters, metal containers, brushes, and small tools. Leaded gloves may also be generated and are segregated.

[2]The EPA hazardous waste codes listed apply to the solid TRU waste only and not to any other waste forms that may undergo further treatment or processing (e.g., evaporation or cement fixation). The resulting treated waste stream is evaluated for hazardous waste constituents and assigned the applicable EPA hazardous waste codes. All P/S codes have the potential to generate leaded gloves. The gloves are segregated from other debris waste and are assigned EPA hazardous waste code D008. The D008 code is assigned to the leaded gloves waste stream rather than to each P/S code waste stream.

[3]Refer to the Acceptable Knowledge Roadmap in Attachment 1.

*D008 due to leaded gloves

SIMPLIFIED PROCESS FLOW DIAGRAM

FOR SPECIAL PROCESSING

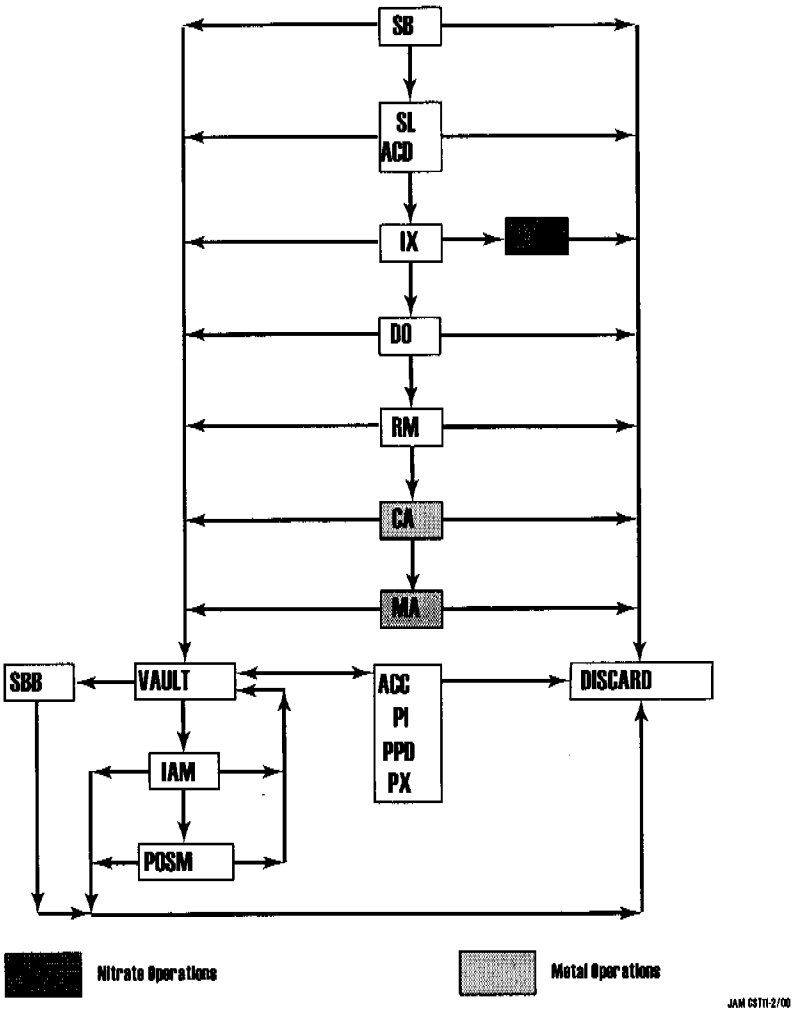

Decision/Discrepancies Resolution Documentation
TA-55 Special Processes Operations

Item Identification*	AK No. 1	Source No. 1	AK No. 2	Source No. 2	Decision/Discrepancy	Rationale**
SBB	States that SCB and SBB are pyro processes and should be grouped there	TWCP-3543/SP-45	P/S code SBB is in special process AK report SCB is in pyrochemical report	Process Report	SCB in pyro process report and SBB in special process report.	C—SMEs stated in meeting that SBB was a developmental process performed in the pyrochemical process, and SCB was also a developmental process performed in the special processes operations. See attached meeting notes.
ACD, DO and SL	States As, Hg, and Se could not be in the waste	TWCP-4167	Table 1 of Process report states that As, Hg, and Se may be present	Process Report	Codes not in process report.	C—SME said As, Hg, and Se would be volatilized in the process and therefore would not be in the waste. See attached meeting notes
All	All waste generated from TA-55 is defense related	TWCP-614	Indicates that waste generated is from both defense and non-defense related operations.	TWCP-886, -4162, -4167		C—Memo dated 8/27/98 says segregation begun. See attached meeting notes. TWCP-4167

Sandy Wander — Evaluator (Print Name)
AK Investigator — Title
Sandy Wander — Signature
2/25/02 — Date

P Rogers — SPM Review (Print Name)
Pamela Rogers — Signature
2/26/02 — Date

* Item identification can be PS Code, waste stream, drum ID, item ID, or other identification of items affected.
** Rationale code: [A=Professional Judgment; B=Most Conservative Decision; C=Other (Specify)]

Source: TWCP-07909

TWCP/WRR
Document Modification/Review Cycle

Step 7: Preparation for Document Control

☐ Revision
☐ Interim Change

Document ID: TWCP-AK-2.1-007 New Rev/IC: R.2/IC1

Preparer: Sandy Wander

Document Title:
Process Acceptable Knowledge Report for Special Processing at TA-55

Blank entries are Not Applicable items.

- ☒ Procedure number verified
- ☒ Procedure Title verified
- ☒ Procedure Revis
- ☒ Pagination verifie
- ☒ Document Heade
- ☒ Attachment Head
- ☐ Hazard Summary
- ☒ Effective/Review Date/LAUR# on cover page
- ☐ Copy of final to Training/Signature Copies
- ☒ Signatures and Dates typed on cover page
- ☒ Revision History table reflect changes and effective date
- orms have been marked as SAMPLE, if applicable
- orms extracted for Web publishing
- ectronic files archived
- Diskette Prepared for Document Control
- ☒ Document Control packet contains signed original, diskette, DRR/Redline, review documentation

AK-007 effective date 3/21/02 -- posted to web on 3/28/02, delay in posting was due to pending response from CBFO per Jim Bailey.

RMDC 3/28/02

Document Tracking Closed ○ Open ◉ Closed Date to DC: 3/27/2002 Signed Initials: SSS.

Step 8: Document Control - Tracking and Web Conversion

Date Received: 3/28/02

- ☑ Verify Signatures
- ☑ Verify Effective Date cover/history
- ☑ Verify IC added to document (if applicable)
- ☑ Log into Database/Make Assignment
- ☑ Print Receipts/Cover sheets
- ☑ Copy document: 2
- ☑ Control Stations Updated - Date: 3/28/02
- ☑ Master Index Updated - Date: 3/28/02
- N/A Archive old revision (Record)

- ☑ Capture Document: __ Word ✓ PDF
- ☑ Forms: __ Yes ✓ No
- ☑ Transfer to Web Server
- ☑ Quality check to Original
- ☑ Verify Signatures ✓ Signature Dates ✓
- ☑ Dates: ✓ Cover ✓ Rev. History ✓ Review Date
- ☑ Web Page TOC: ✓ No/Rev ✓ Effective Date ✓ LAUR ✓ Title ✓ Link ✓ Test
- ☑ On-line test: ✓ Open Doc
- ☑ Electronic Notification: ✓ Sent ✓ Printed
- N/A CBFO: __ Electronic Copy __ Printed
- ☑ Change Control Notification ✓ Sent ✓ Printed ✓ NA

Date Completed: 3/28/02 Signed Initials: [illegible]

If pages are separated match to Document: TWCP-AK-2.1-007

TWCP/WRR
Document Modification/Review Cycle

Step 1: Receipt of Document

Status: ○ Open ◉ Closed ☐ Revision ☐ Interim Change

Date Received: 3/21/2002

Current Rev/IC: R.2

Document ID: TWCP-AK-2.1-007

Rev/IC: R.2/IC1

Document Title:
Process Acceptable Knowledge Report for Special Processing at TA-55

Preparer: Sandy Wander

Date to DP Team: 3/21/2002

Step 2: Modification Cycle

Technical Reviewer:
(QA and Preparer)

Release for Review:

Comments:
03/27/02: Prepared document for transmittal to Document Control

Step 3: Preliminary Review Cycle

☒ IC - Not Applicable (enter action in comments section)

Reviewer	Name	Sent Out	Returned	Comments

Comments:

TWCP/WRR
Document Modification/Review Cycle

Step 4: Comment Reconciliation Cycle

☒ IC - Not Applicable (enter action in comments section)

Reviewer Comments Incorporated:
Redline/DRR Given to Preparer:
Reconciled Comments Returned:
Modifications Made to Document:
Preparer Review of Modifications:
Signed/Release for Final Signature:

Comments:

Step 5: Final Signature Cycle

☒ IC - Not Applicable (enter action in comments section)

Signature	Position	Sent Out	Returned	Comments

Comments:

Step 6: External Review Cycle

Organization	Contact	Sent Out	Returned	Comments
Change Control	G M Polley	3/21/2002	3/25/2002	NA

Comments

To: rubyannf@lanl.gov, mlgarcia@lanl.gov
From: Patricia G Patton <pgp@lanl.gov>
Subject: Procedure Notification
Cc: fabi,bailey, lpc
Bcc:
Attached:

The following are revised AK reports.

Effective Date: 3/21/02

TWCP-AK-2.1-004,R.2/IC1 - Process Acceptable Knowledge Report for Miscellaneous Operations at TA-55 (LA-UR-02-1714)

TWCP-AK-2.1-005,R.2/IC1 - Process Acceptable Knowledge Report for Nitrate Operations at TA-55 (LA-UR-02-1715)

TWCP-AK-2.1-006,R.2/IC1 - Process Acceptable Knowledge Report for Pyrochemical Processes at TA-55 (LA-UR-02-1713)

[redacted] Process Acceptable Knowledge Report for Special Processing at TA-55 (LA-UR-02-1712)

TWCP-AK-2.1-009,R.0/IC1 - Process Acceptable Knowledge Report for Plutonium-238 Operations at TA-55 (LA-UR-02-1709)

~~~~**~~**~~**~~**~~**~~**~~**~~**~~**

Patricia G. Patton

Los Alamos National Laboratory
E-ET / TWCP
Records Management / Document Control
(RMDC)
557 Oppenheimer
TA-00 / bldg 764
MS M319
Phone: (505) 667-2071
Email: pgp@lanl.gov

~~~~**~~**~~**~~**~~**~~**~~**~~**~~**

LOS ALAMOS
NATIONAL LABORATORY - TWCP RMDC

Controlled Document Acknowledgment

Failure to return receipt by response date may result in removal from Distribution and/or placement on Supervised Work Activities for reciepients who are overseeing or performing work to this document.

Please Sign, Fold, and Return this Form

To: TWCP RMDC **Mail Stop: M 319** **Please Respond 4/11/2002**

TWCP-AK-2.1-007,R.2/IC1

Effective Date 3-21-2002 **Doc_Source** TWCP **Doc_Status** FINAL **Entry No**

Document Title PROCESS ACCEPTABLE KNOWLEDGE REPORT FOR SPECIAL PROCESSING AT TA-55 (LA-UR-021712)

Document Comments

Work Stations	ID_No	Name	MS	Organization	Copy
☒ RMDC ✓	N/A	?	?	?	
☐ WCRRF					
☐ RAMROD					
☐ RANT					
☐ DECON ✓					
☒ QA					

Action Required:
Please sign receipt and return to **RMDC, M 319**. My Signature on this Form verifies that I have Received this Document.

___ Please remove me from the Controlled Distribution List. Since the contents of this document does not apply to our operation the document is being returned. (Not applicable for Controlled Stations)

To be signed by the Controlled Document Recipient or their designee.

Signature: _____ Date: 3/28/02

TWCP/WRR
Document Modification/Review Cycle

Step 7: Preparation for Document Control

☒ Revision
☐ Interim Change

Document ID: TWCP-AK-2.1-007 New Rev/IC: R.2

Preparer: John Musgrave

Document Title:
Process Acceptable Knowledge Summary Report for Special Processing at TA-55

Blank entries are Not Applicable items.

- ☒ Procedure number verified
- ☒ Procedure Title verified
- ☒ Procedure Revision/IC verified
- ☒ Pagination verified
- ☒ Document Header verified
- ☒ Attachment Header verified
- ☐ Hazard Summary verified (if applicable)
- ☒ Effective/Review Date/LAUR# on cover page
- ☐ Copy of final to Training/Signature Copies
- ☒ Signatures and Dates typed on cover page
- ☒ Revision History table reflect changes and effective date
- ☐ Forms have been marked as SAMPLE
- ☐ Forms extracted for Web publishing
- ☒ Electronic files archived
- ☒ Diskette Prepared for Document Control
- ☒ Document Control packet contains signed original, diskette, DRR/Redline, review documentation

Document Tracking Closed ○ Open ◉ Closed Date to DC: 5/17/2001 Signed Initials: JS

Step 8: Document Control - Tracking and Web Conversion

Date Received: 5/18/01

- ☑ Verify Signatures
- ☑ Verify Effective Date cover/history
- NA Verify IC added to document (if applicable)
- ☑ Log into Database/Make Assignment
- ☑ Print Receipts/Cover sheets
- ☑ Copy document: 1
- ☑ Control Stations Updated - Date: 5/18/01
- ☑ Master Index Updated - Date: 5/18/01
- ☑ Archive old revision (Record)

- ☑ Capture Document: ✓ Word ✓ PDF
- ☑ Forms: __ Yes ✓ No
- ☑ Transfer to Web Server
- ☑ Quality check to Original
- ☑ Verify Signatures ✓ Signature Dates ✓
- ☑ Dates: ✓ Cover ✓ Rev. History ✓ Review Date
- NA Add: Controlled Document Original Signatures on File at the RMDC
- NA Security Set for: ____ Read Only
- ☑ Web Page TOC: ✓ No/Rev ✓ Effective Date NA LAUR ✓ Title ✓ Link ✓ Test
- ☑ On-line test: ✓ Open Doc NA Password
- ☑ Electronic Notification: ✓ Sent ✓ Printed
- ☑ CAO: ✓ Electronic Copy ✓ Printed

Date Completed: 5/18/01 Signed Initials: CG

TWCP/WRR
Document Modification/Review Cycle

Step 4: Comment Reconciliation Cycle

☐ IC - Not Applicable (enter action in comments section)

		Comments:
Reviewer Comments Incorporated:		
Redline/DRR Given to Preparer:		
Reconciled Comments Returned:		
Modifications Made to Document:		
Preparer Review of Modifications:		
Signed/Release for Final Signature:		

Step 5: Final Signature Cycle

☐ IC - Not Applicable (enter action in comments section)

Signature	Position	Sent Out	Returned	Comments
J. Fabryka-Martin	Technical	5/7/2001	5/7/2001	Independent Technical Reviewer/Editor
M. Lin	SPM	5/10/2001	5/10/2001	Site Project Manager
S. Wander	QA	5/14/2001	5/14/2001	Waste Certification Official
M. Gavett	QA	5/14/2001	5/14/2001	Site Project QA Officer
C. Foxx	Fac Mgr	5/7/2001	5/7/2001	Faciity Representative

Comments:

Step 6: External Review Cycle

Organization	Contact	Sent Out	Returned	Comments
Classification			5/16/2001	LA-UR-01-2560

Comments

TWCP/WRR
Document Modification/Review Cycle

Step 1: Receipt of Document

Status: ○ Open ◉ Closed ☒ Revision ☐ Interim Change

Date Received: 4/1/2001

Current Rev/IC: R.1

Document ID: TWCP-AK-2.1-007

Rev/IC: R.2

Document Title:
Process Acceptable Knowledge Summary Report for Special Processing at TA-55

Preparer: John Musgrave

Date to DP Team: 4/1/2001

Step 2: Modification Cycle

Technical Reviewer:
(QA and Preparer)

Release for Review:

Comments:
04/01/01 through 05/16/01: Incorporated changes as made by author, reviewers, and auditors.

Step 3: Preliminary Review Cycle

☐ IC - Not Applicable (enter action in comments section)

Reviewer	Name	Sent Out	Returned	Comments

Comments:

To: rubyannf@lanl.gov, mlgarcia@lanl.gov, prmtz@lanl.gov
From: Louise Garcia <louise@lanl.gov>
Subject: For Training Distribution
Cc: fl@lanl.gov, manmtz@lanl.gov
Bcc:
Attached:

The following are revised AK Reports.

TWCP-AK-2.1-006,R.2 - Process Acceptable Knowledge Summary Report for Pyrochemical Processes at TA-55

TWCP-AK-2.1-007,R.2 - Process Acceptable Knowledge Summary Report for Special Processing at TA-55

To: wipp.notify@wipp.carlsbad.nm.us
From: Louise Garcia <louise@lanl.gov>
Subject: [Procedure]
Cc: Tammy.Bowden@wipp.carlsbad.nm.us
Bcc: fl@lanl.gov
Attached: K:\twcp\RMDC\AK\TWCP-AK-2.1-006\TWCP-AK-2^1-006R2.pdf;
K:\twcp\RMDC\AK\TWCP-AK-2.1-007\TWCP-AK-2^1-007R2.pdf;

The following are revised AK Reports.

TWCP-AK-2.1-006,R.2 - Process Acceptable Knowledge Summary Report for Pyrochemical Processes at TA-55

TWCP-AK-2.1-007,R.2 - Process Acceptable Knowledge Summary Report for Special Processing at TA-55

LOS ALAMOS
NATIONAL LABORATORY - TWCP RMDC

Controlled Document Acknowledgment

Failure to return receipt by response date may result in removal from Distribution and/or placement on Supervised Work Activities for reciepients who are overseeing or performing work to this document.

Please Sign, Fold, and Return this Form

To: **CST-7 RMDC** Mail Stop: **E517** Please Respond By: **6/1/2001**

TWCP-AK-2.1-007,R.2

Effective Date 5-18-2001 **Doc_Source** TWCP **Doc_Status** FINAL **Entry No**

Document Title PROCESS ACCEPTABLE KNOWLEDGE SUMMARY REPORT FOR SPECIAL PROCESSING AT TA-55

Document Comments

Work Stations	ID_No	Name	MS	Organization	Copy
☒ RMDC ✓	N/A	?	?	?	
☐ WCRRF					
☐ RAMROD					
☐ RANT					
☐ DECON					
☐ QA					

Action Required:

Please sign receipt and return to **RMDC, E517**. My Signature on this Form verifies that I have Received this Document.

___ Please remove me from the Controlled Distribution List. Since the contents of this document does not apply to our operation the document is being returned. (Not applicable for Controlled Stations)

To be signed by the Controlled Document Recipient or their designee.

Signature: Louise Garcia Date: 5/18/01

Draft #1

TA-55 PLUTONIUM FACILITY
ACCEPTABLE KNOWLEDGE REPORT

REPORT TITLE: Process Acceptable Knowledge Summary Report for Special Processing at TA-55

REPORT NUMBER: TWCP-AK-2.1-007,R.1 (LA-UR-00-5863)

WASTE GENERATED FROM PROCESS/STATUS CODES: ACC, ACD, DO, IAM, IX, PI, POSM, PPD, PX, RM, SB, SBB, SL, and VU

EFFECTIVE DATE: 12/04/00

NEXT REVIEW DATE: 12/04/02

DOCUMENT PREPARER:

John Musgrave	12/04/00
NAME	DATE

APPROVALS:

June Fabryka-Martin	12/04/00
INDEPENDENT TECHNICAL REVIEWER/EDITOR	DATE
Pamela Rogers	12/04/00
SITE PROJECT MANAGER	DATE
Matt J Riggs	12/04/00
WASTE CERTIFICATION OFFICIAL	DATE
M A Gavett	12/04/00
SITE PROJECT QA OFFICER	DATE
Charles L. Foxx	12/04/00
FACILITY REPRESENTATIVE	DATE

© 2000 University of California

PROCESS/STATUS (P/S) CODE INDEX

Note: This index indicates the main process AK summary report and report section that covers each P/S code mentioned in this report.

P/S Code	P/S Name	Process AK Summary Report and Report Section*	
ACC	Ammonium Chloride Conversion	Special Processing	3.4.8, Att. 4
ACD	Cascade Dissolver	Special Processing	3.4.1, Att. 4
CA	Casting	Metal Operation Processes	3.4.2, Att. 4
CF	Cement Fixation	Nitrate Operations	3.4.5, Att. 4
DO	Dissolution of Oxide	Special Processing	3.4.3, 3.4.5, 3.4.7, Att. 4
EV	Evaporator	Nitrate Operations	3.4.4, Att. 4
HP	Cement Fixation	Nitrate Operations	3.4.5, Att. 4
IAM	Inspection and Measurement	Special Processing	3.4.1, Att. 4
IX	Ion Exchange	Special Processing	3.4.2, Att. 4
MA	Machining	Metal Operation Processes	3.4.2, Att. 4
PI	Preparation of Isotopes	Special Processing	3.4.4, Att. 4
POSM	Processing Out-of-Specification Material	Special Processing	3.4.3, Att. 4
PPD	Pu Pellet Dissolution	Special Processing	3.4.11, Att. 4
PX	Multiple DOR with In-Situ Regeneration and Electrorefining	Special Processing	3.4.6, 3.4.7, 3.4.8, 3.4.9, 3.4.10, Att. 4
RM	Reduction to Metal	Special Processing	3.4.4, 3.4.6, 3.4.7, Att. 4
SB	Scrap Burning	Special Processing	3.4.1, Att. 4
SBB	Ca/Al Scrubbing RD&D	Special Processing	3.4.9, Att. 4
SE	Solvent Extraction	Chloride Operations	3.4.3, Att. 4
SL	Scrap Leaching	Special Processing	3.4.1, Att. 4
VU	Vessel Unloading	Special Processing	Att. 4
VUL	Vessel Unloading	Nitrate Operations	3.4.1, Att. 4

* Process AK summary reports: Chloride Operations (TWCP-AK-2.1-002,R.1), Metal Operation Processes (TWCP-AK-2.1-003,R.1), Nitrate Operations (TWCP-AK-2.1-005,R.1), Special Processing (this report)

Rename
Pyrochemical R & D

Process feed:

Plutonium metal or metal alloys and oxides; pyrochemical salts; crucible pieces; anode heels; and ash.

Radioisotopic content of the waste:

Variety of plutonium material types with different isotopic compositions. Am-241, Np-237, and U-234 may be present at detectable concentrations as decay products of their plutonium precursors. Some of the processes separate plutonium and americium so that the waste will usually be enriched in americium, but may also be depleted in some cases.

RCRA Constituents/EPA Hazardous Waste Numbers:

- D005 (barium) and D008 (lead): P/S code VU
- D005 (barium), D006 (cadmium), D007 (chromium), D008 (lead), and D011 (silver): P/S codes ACD, IAM, SB and SL.
- D006 (cadmium), D007 (chromium), D008 (lead), and D011 (silver): P/S code PX (zinc metal button)
- D006 (cadmium), D007 (chromium), D008 (lead), D009 (mercury), and D011 (silver): P/S code IX
- D006 (cadmium), D008 (lead), and D019 (carbon tetrachloride): P/S code PX because the salts, crucibles, and debris waste items discarded under this code may include some RCRA-regulated ~~metal residues~~ constituents above the toxicity characteristic limits
- D007 (chromium) and D011 (silver): P/S codes DO and POSM
- D008 (lead): metal waste debris from all P/S codes in special processing, except ACD and PPD, due to disposal of leaded gloves; after May 1992, leaded gloves were separated from other metal debris
- No F, K or P codes

Process waste volume (if known):

Waste volumes for each P/S code have not been tracked. Instead, waste items are segregated into similar material types and packaged in waste containers. Waste containers are segregated into waste streams in the Sampling Plan, and waste stream volumes are reported in that document.

Years of generation for the process waste: 1980–present

(MT42 is the designation for plutonium that is enriched in Pu-242. See section 3.5.2 and Table 2.)

Under P/S code IAM, MT42 scrap items (gloves, ash, rags and other items that may contain RCRA-listed metals) were taken from the vault, visually inspected for material type, and remeasured by non-destructive assay. If the Pu content was less than the DL, the items were discarded. Material that was not discardable, but was within specification, would be sent to P/S codes DO or SL for treatment or was returned to the vault. Out-of-specification material was sent to P/S code POSM for processing. Activities conducted under POSM are similar to those for P/S code DO (section 3.4.5).

3.4.2 Nitrate Anion Exchange (P/S code IX)

and Table 2)

Nitrate anion exchange is the primary method used at LANL for the aqueous concentration of plutonium. The most commonly used ion exchange resin is a polyvinyl pyridine base macroporous-type resin. Information on the use of this method for processing plutonium material ~~type MT 42 (see section 3.5.2)~~, is provided in references SP-6, SP-7, SP-8, SP-9, SP-34 (all in TWCP-3543). Nitrate anion exchange for MT 52 is discussed in the nitrate operations process AK report (TWCP-AK-2.1-005,R.1, section 3.4.3).

Nitrate anion exchange is a very powerful technique for recovery and separation of plutonium from most elements in the periodic table. At constant acidity, the amount of plutonium absorption onto the resin increases with nitrate concentration. Aluminum nitrate is added to the column to complex with fluoride and oxalate anions, which would otherwise complex with plutonium and prevent its full absorption onto the resin. The plutonium must be in the +IV oxidation state for absorption onto the column and, because plutonium can exist in five different oxidation states in aqueous solution, the oxidation state must be adjusted by careful selection of the sequence and type of reducing and oxidizing agents.

Major reducing and oxidizing agents used in plutonium production operations include hydroxylamine nitrate ($NH_2OH{\bullet}HNO_3$), ferrous ammonium sulfate [$Fe(SO_4)\ (NH_4)_2SO_4{\bullet}6H_2O$], sodium nitrite ($NaNO_2$), urea [$CO(NH_2)_2$] and hydrogen peroxide (H_2O_2).

Ion exchange operations are typically divided into the following steps: (1) column conditioning, (2) feed oxidation state adjustment, (3) loading plutonium in nitric acid, (4) washing with 7 molar nitric acid, (5) elution with hydroxylamine nitrate, and (6) readjustment of the column from the low-acid elution step to 7–8 molar nitric acid for the next column run.

Effluents from nitrate ion exchange, when discardable, are sent to P/S code EV (part of nitrate operations), where they are reduced in volume

Table 1. Process Feed Materials for Special Processing

Feed Material	Potential Presence of RCRA-Regulated Substances	P/S Codes in Special Processing
Ash from P/S code SB	Usually suspect contaminated with Ba, Cd, Cr, Pb, and Ag (D005, D006, D007, D008, D011). As, Hg, and Se may also be present although these metals are volatilized at high temperatures if present in the oxide and chloride forms.	ACD, DO, SL
Crucible pieces (tantalum, magnesium oxide)	Typically fairly pure, no RCRA substances present	ACD, SL
Hydroxide cakes	Typically contaminated with RCRA-regulated heavy metals Cd, Pb, Hg, Ag and possibly Cr (D006, D008, D009, D011, and D007)	DO, POSM,
Miscellaneous materials contaminated with Pu (e.g. sand, slag, tools, crucibles, metal, glass, plastic, labware, scrap, rags, glovebox sweepings, ~~pump oil~~)	Typically contaminated with RCRA-regulated heavy metals Cd, Pb, Hg, Ag and possibly Cr (D006, D008, D009, D011, and D007)	ACD, DO, SB, SL
Pu chlorides and fluorides (from P/S codes PI, PX, and RM)	Variable purity	RM
Pu metal or metal alloy	High purity, no RCRA-regulated substances, unless noted otherwise	ACC (variable purity), PI (variable purity), PPD, POSM, RM, SB
Pu oxalates	Typically fairly pure, no RCRA substances present	SL
Pu oxides	Variable purity, suspect contaminated with RCRA-regulated heavy metals Cd, Cr and Pb (D006, D007, D008)	DO, PI, PX, POSM, RM
Pyrochemical salts	Typically fairly pure, no RCRA substances other than Ba (D005) are present	DO

Table 2. Average Isotopic Content ~~of Plutonium~~ Material Types and Enrichments (Weight %)

bounds dimensionless

Material Type (MT)	Plutonium isotope and half-life						Upper limits for weight ratios		
	Pu-238 (87.74 yr)	Pu-239 (24120 yr)	Pu-240 (6564 yr)	Pu-241 (14.35 yr)	Pu-242 (376,300 yr)	Pu-244 (8.26 x 10^7 yr)	U-234/ Total Pu	U-235/ Total Pu	Am-241/ Total Pu
MT 51	0.006	96.77	3.13	0.076	0.018	—	1×10^{-5}	0.001	0.0006
MT 52	0.01	93.78	6	0.2	0.02	—	2×10^{-5}	0.001	0.002
MT 53	0.03	91.08	8.45	0.366	0.071	—	7×10^{-5}	0.0009	0.003
MT 54	0.046	87.42	11.5	0.81	0.22	—	0.0001	0.0009	0.007
MT 55	0.06	83.88	14.73	1.03	0.304	—	0.0002	0.0009	0.009
MT 56	0.061	81.9	16.51	1.18	0.355	—	0.0002	0.0009	0.01
MT 57	0.433	74.63	20.7	2.55	1.69	—	0.001	0.0008	0.02
MT 42									
84%	1.02	1.37	10.32	3.13	84.14	0.02	0.003	1×10^{-5}	0.03
90%	0.72	1.26	6.4	1.86	89.77	—	0.002	1×10^{-5}	0.02
95%	0.45	0.56	2.47	0.906	95.58	0.029	0.001	6×10^{-6}	0.008
MT 83									
83%	83.89	13.8	1.9	0.32	0.09	—	0.26	0.0002	0.003
89%	89.26	10.07	0.633	0.021	0.015	—	0.28	0.0001	0.0002

Source: TWCP-698

Footnote: (see AK-02)

Acceptable Knowledge (TWCP-DTP-1.2-064). If warranted, this AK report will be updated to incorporate the results of these comparisons.

3.5.3 Chemical Content Identification

Chemical inputs to special processing are listed in Table 3. The use of strong acids, bases, or oxidizers does not result in RCRA listings for solid debris waste from these processes because of the absence of free liquids in this waste. However, D006, D007, D008, D011, and D019 apply to some of the process wastes generated by special processing, as noted in Table 3.

4.0 ASSIGNMENT OF EPA HAZARDOUS WASTE NUMBERS

The assignment of EPA hazardous waste numbers to process wastes from special processing operations is summarized below, as well as on the process timelines in Attachment 3, and the table of process inputs and outputs in Attachment 4. These assignments take into account the possible presence of RCRA chemicals in process waste as a result of their suspected or known presence in feed materials, chemical inputs, equipment, and glovebox surfaces.

Table 3. Chemical Inputs to Processes Described in This Report

Chemical Input	P/S Codes in which RCRA-Listed Chemical Is Used	Comments on Applicability of RCRA Listing
Gas		
Chlorine gas Fluorine gas Hydrogen fluoride gas	~~PX, PI, RM~~ ~~PI~~ ~~PI~~	D001 and D002 do not apply to these gases, because there are no free liquids in this waste. Also the gas cylinders are outside the building, and the gases are plumbed into the glovebox.
Acids		
Hydrochloric acid Hydrofluoric acid Nitric acid Oxalic acid		D002 does not apply to the solid process waste because there are no free liquids in this waste
Bases		
Potassium hydroxide Sodium hydroxide		D002 does not apply to the TRU process waste because there are no free liquids in this waste
Metals		
Bismuth metal Cadmium metal Calcium metal Gallium metal Lead metal	 PX PX	 D006 D008
Inorganic Chemicals		
Aluminum nitrate Ammonium chloride Calcium chloride Calcium fluoride Ferrous ammonium sulfate Hydrogen peroxide Hydroxylamine hydrochloride Hydroxylamine nitrate Iodine Magnesium chloride Magnesium oxide (sand and crucibles) Potassium chloride	 ~~PI~~ delete	
Potassium dichromate	DO	D007 until end of 1993. Used in P/S code DO as titration endpoint until end of 1993. Solution and precipitates then processed by hydroxide precipitation under same code. Hydroxide cakes (in which chromium would be present) sent to P/S code POSM. Ultimately, chromium ends up in the solution sent to P/S code EV, from which residue gets sent to cement fixation.
Silver nitrate	DO, POSM	D011 until end of 1993. Used in P/S code DO for chloride titration until end of 1993. Solution and precipitates then processed by hydroxide precipitation under same code. Hydroxide cakes (in which silver would be present) sent to P/S code POSM. Ultimately, silver ends up in the solution sent to P/S code EV, from which residue gets sent to cement fixation.

limits. Carbon tetrachloride was used as a chlorination reagent in this P/S code from April 1988 until July 1989.

D007 (chromium) and D011 (silver) apply to P/S codes DO and POSM. Potassium dichromate ~~and silver~~ nitrate were used in P/S code DO for chloride titrations until ~~the end of~~ mid-1993. Solution and precipitates were then processed by hydroxide precipitation under the same code. Hydroxide cakes (in which chromium and silver would be present) were sent to P/S code POSM. Ultimately, chromium and silver end up in the solution sent to P/S code EV, from which the residue gets sent to cement fixation.

D008 (lead) applies to metal waste from all P/S codes in special processing, except for P/S codes ACD and PPD. Before 1992, leaded gloves were segregated and discarded as metal debris. Thus, metal debris containing these gloves from chloride operations before 1992 is assigned D008. Since May 1992, however, these gloves have been routinely segregated from other metal debris although they are still discarded under the originating P/S code (TWCP-4166).

4.3 Corrosivity, Reactivity, and Ignitability

See Section 6.0.

5.0 DETERMINATION OF THE RADIOISOTOPIC COMPOSITION

See Section 3.5.2.

6.0 VERIFICATION THAT IGNITABLE, REACTIVE, AND CORROSIVE WASTES WERE EXCLUDED

According to the WIPP WAP, "The prohibition of liquids and containerized gases prevents the shipment of corrosive, ignitable, or reactive wastes." Administrative controls on waste packaging were in place at various times to ensure the absence of such items from the waste stream.

- Liquids were prohibited from solid waste streams at TA-55 when the facility opened in January 1978. A waste management procedure written to cover operations at the new facility, *TA-55 Standard Operating Procedure (SOP) 406-GEN-R00*, stated that "Liquids are not permitted in any container of solid waste materials" (TWCP-3943).

- Chemical Waste Disposal Requests introduced in June 1980 included checkboxes which the waste generator was required to check if the waste contained corrosive acids or bases, or pyrophoric, flammable, corrosive, explosive, toxic, carcinogenic or highly reactive materials.

- The Certification Plan (TWCP-697) and related Generator Attachments (TWCP-701) were implemented in 1987. Waste generators were required to sign a statement on the WODF documenting that the waste contained "no free liquids, pyrophorics, explosives, compressed gases, powders or materials other than the indicated matrix." Checkboxes were also present for indicating the presence or absence of corrosive chemicals. Full implementation of this generator statement occurred in May 1987.

- Waste management inspectors perform visual examination of the waste prior to its initial packaging, thus allowing the inspectors to verify the generator's WODF statement (TWCP-701, Sections 3.8.5 to 3.8.6). (see AK-02)

- ~~Explosives were prohibited~~ from TA-55 until installation of the Impact Test Facility ~~in the early~~ 1990s. Explosives continue to be banned in the solid waste streams up to the present time. If a misfire should occur, the requirement is to destroy the unspent powder by burning.

- The Waste Profile Request Form (WPRF), which has been in use at LANL since 1991, includes a statement which must be authenticated by the waste generator, that the waste is not ignitable (flash point >200°F), reactive, or corrosive.

- The TA-55 Generator Attachments to the Certification Plan were updated in 1995 (TWCP-700) but the prohibition on liquids in the solid waste, and the waste management inspection, remained in effect.

Hence, since the inception of operations at TA-55, corrosive and reactive wastes have been excluded from TA-55 solid wastes through the prohibition of liquids.

The absence of these prohibited items is verified through radiography of each waste container and visual examination of selected containers during TWCP characterization activities. These data will be used to assess the accuracy of AK information in accordance with *Reconciliation of Visual Examination and Radiography Information* (TWCP-QP-1.1-028). Any free liquids are remediated, or the container is tagged as non-compliant by filing a Prohibited Waste Report in accordance with *Nonconformance Reporting and Tracking* (TWCP-QP-1.1-007).

7.0 VERIFICATION THAT INCOMPATIBLE CHEMICALS WERE PROHIBITED

Section 6.0 summarizes administrative controls in place at TA-55 that prohibit incompatible chemicals in the waste, and measures taken to verify their absence. In addition, all waste containers shipped from TA-55 to TA-54 for storage were evaluated for potentially incompatible chemicals in accordance with 49 *Code of Federal Regulations* (CFR) Subpart C—Segregation and separation chart of hazardous materials; Section 177.848, Segregation of hazardous materials, and were determined to be in compliance with this requirement.

the time of startup of TA-55 in 1978. Whenever any transformer oil is drained, it is handled by a subcontractor who is wholly responsible for its disposal (TWCP-AK-2.1-005,R.1, Section 9.0). This oil does not enter the LANL disposal operations.

10.0 VERIFICATION THAT THERE IS NO ASBESTOS IN THE WASTE

Asbestos gloves were used in glovebox operations in P/S codes OR, RM and PX (TWCP-4162, TWCP-4166), which are discussed in *Process Acceptable Knowledge Summary Report for Pyrochemical Processes at TA-55* (TWCP-AK-2.1-006,R.1), and in this report, section 3.4.7, respectively. These gloves were disposed with ceramic and glass debris. Asbestos heating mantles were never used at TA-55. Asbestos-bearing transite was widely used until recently for thermal insulation, including as a coverplate over the furnace in glovebox wells, and as part of end plates on Lindberg furnaces (TWCP-4162, TWCP-4166). Although many Lindberg furnaces have been replaced with newer asbestos-free furnaces, some are still in use at TA-55. The transite would have been disposed either as metal or as ceramic and glass waste streams.

11.0 CITED PROCEDURES AND REQUIREMENTS DOCUMENTS

- 40 CFR Part 261, Subpart C—Characteristics of hazardous waste, Sections 261.21 (*Characteristic of ignitability*), 261.22 (*Characteristic of corrosivity*), 261.23 (*Characteristic of reactivity*), and 261.24 (*Toxicity characteristic*)
- 40 CFR Part 261, Subpart D—Lists of hazardous waste, Sections 261.31 *(Hazardous wastes from non-specific sources)*, 261.32 *(Hazardous wastes from specific sources)*, and 261.33 *(Discarded commercial chemical products, off-specification species, container residues, and spill residues thereof)*
- 49 CFR Subpart C—Segregation and separation chart of hazardous materials. Section 177.848, *Segregation of hazardous materials*
- *Acceptable Knowledge Documentation* (TWCP-QP-1.1-021,R.5)
- ~~*Los Alamos National Laboratory Transuranic Waste Characterization Sampling Plan*~~ (TWCP-PLAN-0.2.7-001,R.3)
- *Nonconformance Reporting and Tracking* (TWCP-QP-1.1-007)
- *Process Acceptable Knowledge Summary Report for Chloride Operations at TA-55* (TWCP-AK-2.1-002,R.1)
- *Process Acceptable Knowledge Summary Report for Metal Operation Processes at TA-55* (TWCP-AK-2.1-003,R.1)
- *Process Acceptable Knowledge Summary Report for Miscellaneous Operations at TA-55* (TWCP-AK-2.1-004,R.1)

- *Process Acceptable Knowledge Summary Report for Nitrate Operations at TA-55* (TWCP-AK-2.1-005,R.1)
- *Process Acceptable Knowledge Summary Report for Pyrochemical Processes at TA-55* (TWCP-AK-2.1-006,R.1)
- *Reconciliation of Visual Examination and Radiography Information* (TWCP-QP-1.1-028)
- *Waste Acceptance Criteria for the Waste Isolation Pilot Plant* (DOE/WIPP-069)
- *Waste Analysis at Facilities that Generate, Treat, Store and Dispose of Hazardous Waste* (EPA/OSWER 9938.4-03)
- Waste Analysis Plan, Attachment B to the *Hazardous Waste Facility Permit Issued to the Waste Isolation Pilot Plant* (EPA No. NM4890139088)
- *Waste Characterization Data Reconciliation with Acceptable Knowledge* (TWCP-DTP-1.2-064)

TIMELINE FOR SPECIAL PROCESSING

Center HWNs

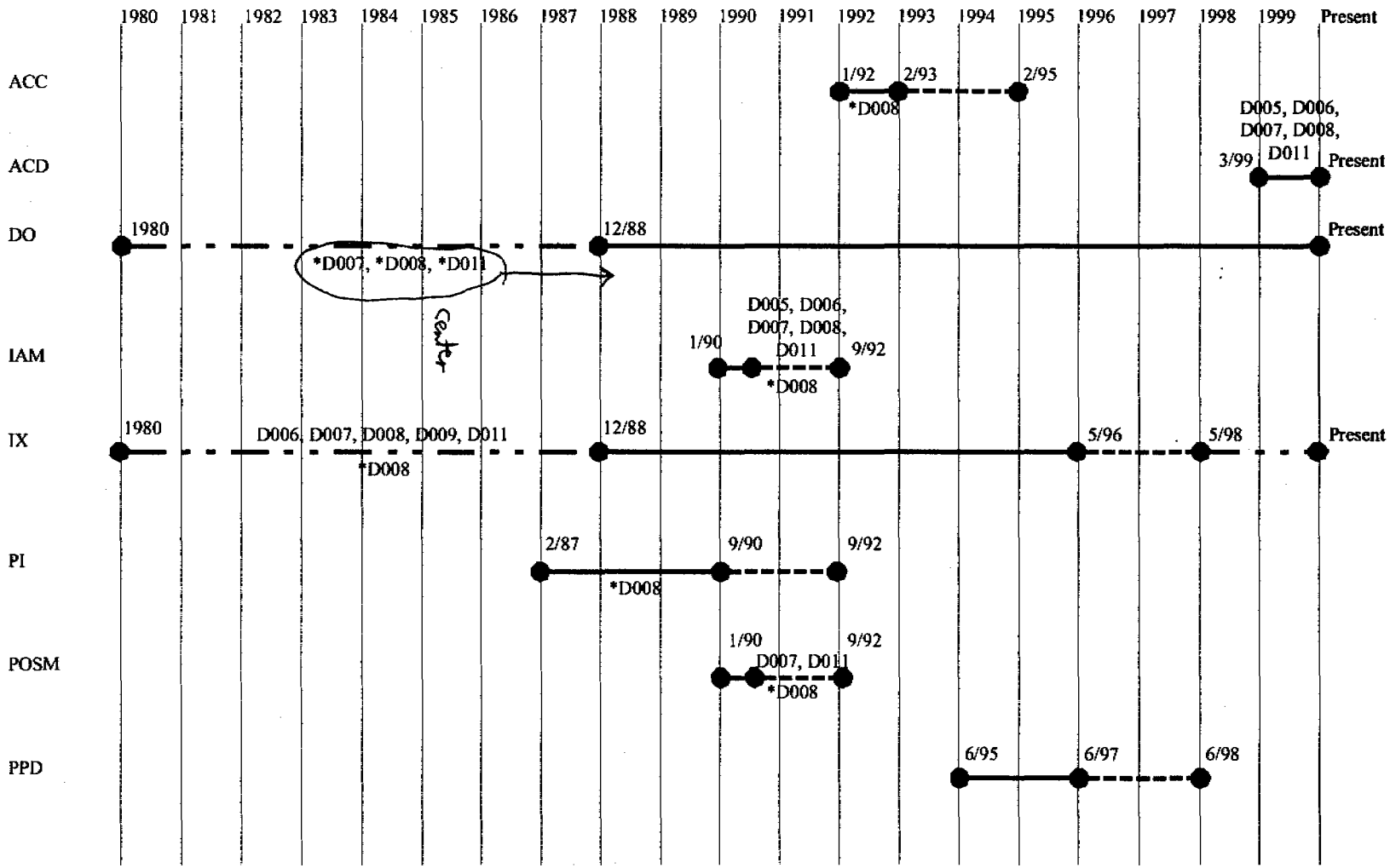

TIMELINE FOR SPECIAL PROCESSING (continued)

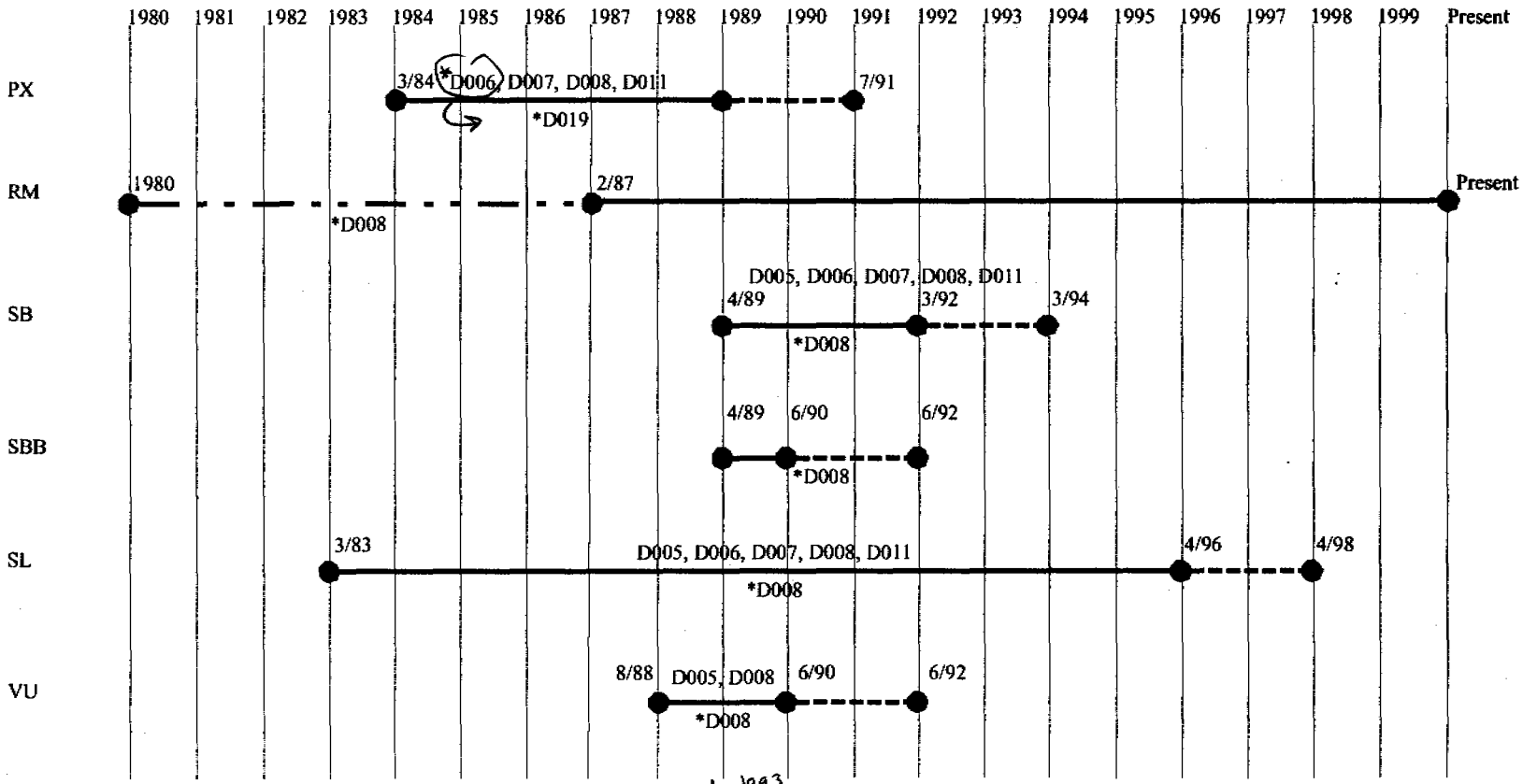

*Notes on time-dependence of RCRA codes
D006 = applies to P/S code PX from 2/87 - 7/89
D007 = applies to P/S codes DO ~~and POSM until the end of 1993~~ ← POSM ends 9/92
D008 = applies to leaded gloves which were discarded in a separate waste stream after 1992, still under the originating P/S code
D011 = applies to P/S codes DO ~~and POSM (until the end of)~~ 1993
D019 = applies to P/S code PX from 4/88 to 7/89

from 1990 to mid-1993

from 1990 to mid

P/S Code	P/S Title	Process Inputs		Process Outputs		EPA Codes[2]	References[3]
		Feed Stream(s)	Chemicals/Reagents	Product	Waste Stream[1]		
PI	Preparation of Isotopes	Plutonium dioxide, impure Pu metal	Fluorine gas, hydrogen fluoride gas, calcium metal, iodine	Pu metal to originating P/S code	Slag and crucible to vault or discard. Tools, labware, rags, gloves to discard	D008	TWCP-3543 (SP-22, SP-23, SP-41)
POSM	Processing Out-of-Specification Material	Out-of-spec plutonium scrap, hydroxide cakes	Nitric acid, sodium hydroxide, potassium hydroxide	Plutonium to vault	Ion exchange resins, hydroxide filtrate to caustic waste; labware, gloves, tools, rags to discard	D007, D008, D011	None
PPD	Pu Pellet Dissolution	Pu pellet	Nitric acid, hydrofluoric acid, oxalic acid, sodium oxalate, sodium hydroxide, potassium hydroxide	Pu oxide to 238-Pu operations; Hydroxide cake to vault	Labware, gloves, rags to discard	None	TWCP-3543 (SP-38)
PX	~~Multiple DOR with in-situ Regeneration and Electrorefining~~ Rename hydrochemical R&D.	Pu oxide feed	Calcium metal, MgO crucibles, mineral acids, calcium chloride, sodium chloride, potassium chloride, carbon tetrachloride, cadmium metal, lead metal, gallium metal, bismuth metal	Pu metal to P/S CA, salts and crucible to vault or discard, anode residue to vault, spent hardware leach solution to P/S code SE.	Labware, gloves, rags to discard	D006, D007, D008, D011, D019	TWCP-3543 (SP-26, SP-27, SP-28, SP-29)
RM	Reduction to Metal	Pu oxide or metal from various P/S's DO, CA, MA, vault.	Calcium metal, calcium chloride, sodium chloride, potassium chloride, chlorine gas	Pu metal (high purity) to P/S CA. Out-of-spec to P/S POSM or vault. Reprocess material to P/S DO. Salt and crucibles to P/S DO or discard. Labware, tools to P/S DO if >DL or to discard if <DL.	Covered in column to right	D008	TWCP-3543 (SP-17, SP-18, SP-19, SP-20, SP-21, SP-44)

P/S Code	P/S Title	Process Inputs		Process Outputs		EPA Codes[2]	References[3]
		Feed Stream(s)	Chemicals/Reagents	Product	Waste Stream[1]		
SB	Scrap Burning	Pu scrap from various P/S codes.	No chemicals used	Calcinced scrap to P/S code SL.	Gloves <DL to discard	D005, D006, D007, D008, D011	TWCP-3543 (SP-5, SP-43)
SBB	Ca/Al Scrubbing RD&D	Pu samples from P/S codes OR or SS	Calcium metal, aluminum metal, calcium chloride, sodium chloride, potassium chloride, chlorine gas	Vault. Salt, crucibles > discard limit to vault.	Salt, crucibles <DL discard. Tools labware, rags, and gloves to discard.	D008	None
SL	Scrap Leaching	Pu scrap, other scrap metals, labware, gloves	Nitric acid, hydrofluoric acid, hydrochloric acid	Lean leach solution to P/S IX.	Leached items to discard	D005, D006, D007, D008, D011	TWCP-3543 (SP-1, SP-2, SP-3, SP-4)
VU	Vessel Unloading	Vessels	WD-40 Vacuum grease Silicon adhesive Pneumatic tool oil	Vessels Residues	Metal and wire debris	D005, D008	TWCP-3543 (SP-31)

[1]All P/S codes generate routine laboratory debris waste. For those P/S codes that generate only debris waste, this column is left blank. The debris waste may consist of glassware, plastics, ceramic materials, paper, rags, HEPA filters, metal containers, brushes, and small tools. Leaded gloves may also be generated and are segregated.

[2]The EPA hazardous waste codes listed apply to the solid TRU waste only and not to any other waste forms that may undergo further treatment or processing (e.g., evaporation or cement fixation). The resulting treated waste stream is evaluated for hazardous waste constituents and assigned the applicable EPA hazardous waste codes. All P/S codes have the potential to generate leaded gloves. The gloves are segregated from other debris waste and are assigned EPA hazardous waste code D008. The D008 code is assigned to the leaded gloves waste stream rather than to each P/S code waste stream.

[3]Refer to the Acceptable Knowledge Roadmap in Attachment 1.

MAVIS 5/4/01

TA-55 PLUTONIUM FACILITY
ACCEPTABLE KNOWLEDGE REPORT

REPORT TITLE: Process Acceptable Knowledge Summary Report for Special Processing at TA-55

REPORT NUMBER: TWCP-AK-2.1-007,R.2 (LA-UR-01-)

WASTE GENERATED FROM PROCESS/STATUS CODES: ACC, ACD, DO, IAM, IX, PI, POSM, PPD, PX, RM, SB, SBB, SL, and VU

EFFECTIVE DATE: _____

NEXT REVIEW DATE: _____

DOCUMENT PREPARER:

NAME	DATE

APPROVALS:

June Fabryka-Martin	5/4/01
INDEPENDENT TECHNICAL REVIEWER/EDITOR	DATE
SITE PROJECT MANAGER	DATE
WASTE CERTIFICATION OFFICIAL	DATE
SITE PROJECT QA OFFICER	DATE
FACILITY REPRESENTATIVE	DATE

© 2000, 2001 University of California

present in the process wastes, based on subject matter expert (SME) interviews and any ~~available~~ relevant data

The TWCP Records Management/Document Control (RMDC) Center contains copies of the documents referenced in this report. Any Unclassified Controlled Nuclear Information (UCNI) will be contained in these records, and will not be included in this report. Such records are identified as UCNI in the Acceptable Knowledge Roadmap (Attachment 1).

This process AK summary report is part of a set of closely-related reports about TRU-waste generating activities at TA-55. For convenience in organizing AK for plutonium processing at this facility, the processes were categorized into six arbitrary operational areas. The multiple processes in each area are then described in detail in the following six process AK reports for plutonium:

- *Process Acceptable Knowledge Summary Report for Chloride Operations at TA-55* (TWCP-AK-2.1-002)
- *Process Acceptable Knowledge Summary Report for Metal Operation Processes at TA-55* (TWCP-AK-2.1-003)
- *Process Acceptable Knowledge Summary Report for Miscellaneous Operations at TA-55* (TWCP-AK-2.1-004)
- *Process Acceptable Knowledge Summary Report for Nitrate Operations at TA-55* (TWCP-AK-2.1-005)
- *Process Acceptable Knowledge Summary Report for Pyrochemical Processes at TA-55* (TWCP-AK-2.1-006)
- *Process Acceptable Knowledge Summary Report for Special Processing at TA-55* (TWCP-AK-2.1-007 [this report])

Each process AK report contains information on multiple individual processes that are assigned unique identifiers called process/status (P/S) codes. For example, special processing includes 14 individual processes that are each assigned a P/S code, as listed on the cover page of this report. The search and compilation of AK information was based on P/S code because that is the most detailed level of process information generally recorded in waste generation records. The process AK reports frequently cross-reference one another because P/S codes in one operational area often provide the material feed for P/S codes in another area. An index of P/S codes cited in this process AK report follows the list of acronyms; this index lists process descriptions and the primary process AK report in which that P/S code is discussed.

Assignment of a particular waste container to a waste stream is then made on the basis of waste generator information compiled in the Sampling Plan. Waste generator information is reviewed to identify the types and sources of waste items present in each drum, in order to evaluate the most appropriate waste summary group, waste matrix code, and potential for the presence of hazardous constituents. In the Sampling Plan, TA-55 wastes have been assigned to waste streams based on the waste segregation schemes used by TA-55:

- ~~First~~ B. by radioisotope content (Pu-238 or Pu-239 material type)
- ~~Then~~ B by material matrix (combustible, noncombustible, metal, glass, etc. waste types)
- ~~Then~~ B. by hazardous waste status (mixed, non-mixed, or special case waste streams)

3.3 Waste Physical Form and Content Description

Wastes generated during special processing, primarily debris wastes and wastes entered into the cement fixation process or sent to the Radioactive Liquid Waste Treatment Facility (RLWTF) at TA-50, are covered by this process AK report. General debris waste categories from special processing include

- Cellulose-based waste (for example, paper, cloth)
- Plastic-based waste (for example, gloves, tape, labware)
- Rubber
- Magnesium oxide crucibles
- Metal debris (for example, tantalum crucibles, wire, hose clamps, tools, labware)
- Glass debris

These debris items are contaminated with small amounts of radioactive and chemical substances from special processing.

3.4 Waste Volume and Time Period of Waste Generation

This report covers waste streams generated from 1980, when special processing first began in Building PF-4, to the present. Process wastes from special processing have different associated EPA hazardous waste numbers (HWNs) depending on the time period during which they were generated. The P/S codes, their time period of generation, and corresponding EPA HWNs are shown graphically in Attachment 3, Timeline for Special Processing.

Waste volumes for each P/S code have not been tracked. Instead, waste items are segregated into similar material types and packaged in waste containers. Waste

also classified as a head-end operation in this report because it involves inspection of scrap items from the vault to determine an appropriate disposition for them.

Combustible wastes are burned in a combustion chamber, and the ash is screened and the fines (<#12 sieve) are sent to the rotary calciner (P/S code RC, described in TWCP-AK-2.1-005) (TWCP-3543/SP-42). Rotary calciners remove incompletely oxidized organic material from some types of feed prior to leaching or dissolution in nitric acid (SP-5, SP-43 [both in TWCP-3543]). This treatment step is quite advantageous for the following reasons:

- Organic materials sometimes react vigorously when treated with strong nitric acid,
- Emulsions that form when nitric acid reacts with organic material impede plutonium recovery, and
- Some of the organic materials ~~dissolve~~ react in nitric acid to yield a dark ~~solution~~ mixture that in turn poisons the ion-exchange resin.

Glovebox operations and research and development (R&D) projects routinely generate non-plutonium scrap metal, glass, high-efficiency particulate air (HEPA) filters, tools, plastics, glovebox sweepings, sand, slag, crucibles, etc. Leaching in nitric acid and hydrofluoric acid, or pickling these materials in hydrochloric acid, is a relatively easy but incomplete decontamination method (SP-1, SP-2, SP-3, and SP-4 [all in TWCP-3543]).

Conversion of pyrophoric metals and compounds to stable oxides is usually done by calcination in a controlled oxygen atmosphere and at temperatures less than 600°C. Low-fired oxides are easier to dissolve in nitric acid (TWCP-3543/SP-42).

Dissolution of oxide prepares plutonium for purification by nitrate ion exchange processing and oxalate precipitation.

Under P/S code IAM, MT42 scrap items (gloves, ash, rags and other items that may contain RCRA-listed metals) were taken from the vault, visually inspected for material type, and remeasured by non-destructive assay. (MT42 is the designation for plutonium that is enriched in Pu-242. See section 3.6.2 and Table 2.) If the Pu content was less than the DL, the items were discarded. Material that was not discardable, but was within specification, would be sent to P/S codes DO or SL for treatment or was returned to the vault. Out-of-specification material was sent to

3.5.4.1 Fluorides

Reactive plutonium oxides formed by calcination of oxalate or peroxide precipitates can be treated in a hydrofluorinator to form plutonium fluoride (PuF_4). In the hydrofluorination step, the oxide is treated with hydrogen fluoride (HF) or fluorine gas (F_2) to produce PuF_4. The PuF_4 is mixed with calcium metal, which in turn is heated to form calcium fluoride (CaF_2) and plutonium metal. Quite often, a ~~booster~~ ~~an initiator~~ catalyst (in this case iodine [I_2]) is added to initiate the reaction and to provide sufficient energy to ensure the reaction goes to completion. This method of metal preparation neither purifies the product metal, nor does it introduce many impurities. However, a high-purity oxide feed can produce metal that meets purity specifications for many applications. Wastes generated from this operation include magnesium oxide (MgO) sand, CaF_2, and MgO crucibles. These waste items are sent to leaching operations to recovery any plutonium. Subsequent wastes are discarded. Hydrofluorination at LANL was discontinued in the early 1990s. In the Special Processing operations, this activity was conducted under P/S code PI (SP-22, SP-23, SP-41 [all in TWCP-3543]).

3.5.4.2 Oxides

Metal scrap containing plutonium can be converted to plutonium oxide by burning it at elevated temperature in air. Reactive plutonium oxides can then be converted to plutonium fluoride for reduction to plutonium metal. Unreactive or high-fired plutonium oxide does not react to form plutonium fluoride; instead, the addition of a strong reducing agent in a solvent salt is required to produce plutonium metal from such oxide. The resulting impure metal forms a button in the bottom of the crucible that is covered by a fused oxide/salt layer. The button is removed mechanically from the salt. All residues containing plutonium in excess of the DL are sent to aqueous recovery.

3.5.5 Separation and Purification by Precipitation (P/S code DO)

The separation of plutonium from aqueous solutions makes use of many different precipitation reactions, the most common being reactions involving oxalate, peroxide, hydroxide, and fluoride anions (TWCP-352; SP-10, SP-11, SP-12, SP-13, SP-15, SP-16, SP-25, SP-43 [all in TWCP-3543]). Common reasons for conducting these precipitation reactions include the following:

3.5.5.3 Plutonium peroxide

Plutonium peroxide precipitate gives the best overall separation from cations; and, unlike the two oxalate precipitates, peroxide precipitation also gives excellent separation from Am-241. Plutonium peroxide is dissolved, reprecipitated as plutonium (III) oxalate, and calcined to provide plutonium oxide for plutonium metal production. Calcination of plutoinium oxalate is more easily controlled than calcination of plutonium peroxide.

3.5.5.4 Plutonium hydroxide

Plutonium hydroxide precipitation is quite useful for producing a filtrate that can be discarded to final waste disposal. Oxalate and peroxide filtrates are frequently treated with sodium or potassium hydroxide to precipitate plutonium and Am-241 hydroxides and to destroy residual hydrogen peroxide. In addition, hydroxide precipitation is a good method for discarding spent chloride process solutions because alkaline solutions cause less corrosion of stainless steel. One potential problem with hydroxide precipitation is the generation of voluminous amounts of magnesium and calcium precipitates if pH is not carefully controlled.

3.5.5.5 Plutonium fluoride

Plutonium fluoride precipitation is not as common as precipitation of plutonium oxalate, peroxide, or hydroxide. The feedstock must be relatively pure because separation of plutonium from impurities is not as good for plutonium fluoride as for the other precipitation methods.

3.5.5.6 Disposition of oxalate and peroxide filtrates

Oxalate and peroxide filtrates cannot be sent directly to final waste management without further processing. Oxalate filtrates cannot be directly processed by ion exchange because oxalic acid interferes with adsorption of plutonium onto the resin. ~~LANL evaporates~~ oxalate filtrates are evaporated to destroy the oxalate ion while reducing the volume of solution to be recycled through the ion exchange column (either nitrate or chloride ion exchange).

Both oxalate and peroxide filtrates are amenable to recovery of residual plutonium by hydroxide precipitation and

pieces are sufficiently low in plutonium to be discarded directly as waste under P/S codes RM or PX. Salt that cannot be discarded as waste is routed through aqueous chloride operations (P/S code DO) to recover the plutonium. After May 1987, spent salts above the DL were sent to controlled oxidation to oxidize the pyrophoric metals. In any case, all DOR salts were oxygen sparged before disposal.

The feed oxide, reagent salts and reductant are of the highest purity available because the process is non-purifying. In fact, the plutonium metal produced from this operation is always less pure than the feed material due to impurities derived from the reductant~~reagents~~. Plutonium metal from this process typically requires further processing to meet purity requirements.

3.5.7.2 MCDOR Process

To minimize the salt waste, the MCDOR process was started in 1988 (TWCP-2502, SP-25, SP-27, SP-39 [all in TWCP-3543]). In this process, the molten salt is regenerated by sparging the $CaCl_2$-CaO mixture with chlorine gas between multiple plutonium metal production runs. After approximately five cycles of metal production, the mixture is cooled and the salt and metal phases are separated. The salt is chlorinated and reused for MCDOR. The salt is discarded under P/S codes RM or PX if the plutonium concentration is below the DL. The salts above the DL are returned to P/S code DO for dissolution and recovery. Before 1987, the salts may have been discarded under P/S codes RM or PX or routed to chloride operations. The chlorine off-gas is passed through a caustic scrubber, with the caustic solution going to the RLWTF at TA-50 for disposal if the solution meets this facility's Waste Acceptance Criteria (WAC). If the solution does not meet the WAC, it is returned to P/S code DO for additional treatment.

MCDOR process inputs are low in contaminants. Only high-purity reagent chemical salts are used in the process, and the plutonium oxide feed materials are also of high purity, with absorbed water being the main impurity. MCDOR metal feed material analytical samples were analyzed for cadmium, chromium, lead, and silver. A review of 100 analyses showed that, even in the most impure sample, these D-listed toxicity

chlorinated then reduced to the metal with calcium metal. The feed material for this process was salt containing plutonium MT 42.

3.5.10 Pyroredox (P/S code PX)

The pyroredox operation was developed to recover plutonium material type MT 52 from spent anode heels in the mid- to late-1980s (TWCP-2541). The anode heel was polished with calcium metal to remove surface oxide, then oxidized to plutonium (III) with zinc chloride ($ZnCl_2$) in molten KCl, forming plutonium chloride ($PuCl_3$). Elements easier to be oxidized ~~more electroactive~~ than zinc (including barium) were oxidized into the salt phase, and the zinc formed a metal button. Any of the residual RCRA-regulated heavy metals that may have been present in the spent anode heel (barium, cadmium, chromium, lead, and silver), with the exception of barium, would be present in the zinc button. The salt was then mixed with calcium metal in $CaCl_2$ to reduce the plutonium to the metal phase, as well as reducing all elements ~~less electroactive~~ than easier to be reduced calcium. The salt phase containing small amounts of the impurity barium was mechanically separated from the metal phase and discarded under P/S code PX. The metal phase containing zinc was placed in the vault or further treated (TWCP-2540), and the plutonium eventually was routed back to electrorefining (also conducted under P/S code PX). In the electrorefining process, the RCRA-regulated metals are concentrated in the anode heel, which then may be treated in the pyroredox process to transfer these RCRA metals to the zinc button, or may be roasted in air to form metal oxides and then be dissolved in nitrate operations. Thus, only the zinc button output could contain RCRA-regulated metals above the toxicity characteristic limits.

3.5.11 Plutonium Pellet Dissolution (P/S Code PPD)

Pu-238 pellets were dissolved in a combination of nitric and hydrofluoric acid (TWCP-3543/SP-45). The plutonium was precipitated as the oxalate using either oxalic acid or sodium oxalate ~~and~~ after u.c. digestion the mixture was filtered to separate the solid plutonium oxalate. The oxalate was converted to the oxide by heating to 600°C to 700°C, then the oxide was heated with water vapor to about 800°C to volatilize the residual fluoride ion ~~content~~ as HF ~~to prepare the finished product.~~ The oxalate filtrate was treated with a caustic solution to remove the plutonium by hydroxide precipitation ~~and~~ After subsequent filtration. The hydroxide cake was dried and sent to the vault. The hydroxide filtrate was discarded to the RLWTF at TA-50 if it met this facility's WAC or was recycled to filtration until it did meet the WAC. No solvents or heavy metals were used in the process.

organic

Draft #2
5/1/01 JJM

TA-55 PLUTONIUM FACILITY
ACCEPTABLE KNOWLEDGE REPORT

REPORT TITLE: Process Acceptable Knowledge Summary Report for Special Processing at TA-55

REPORT NUMBER: TWCP-AK-2.1-007,R.2 (LA-UR-01-)

WASTE GENERATED FROM PROCESS/STATUS CODES: ACC, ACD, DO, IAM, IX, PI, POSM, PPD, PX, RM, SB, SBB, SL, and VU

EFFECTIVE DATE: _____

NEXT REVIEW DATE: _____

DOCUMENT PREPARER:

_____ _____
NAME DATE

APPROVALS:

_____ _____
INDEPENDENT TECHNICAL REVIEWER/EDITOR DATE

_____ _____
SITE PROJECT MANAGER DATE

_____ _____
WASTE CERTIFICATION OFFICIAL DATE

_____ _____
SITE PROJECT QA OFFICER DATE

_____ _____
FACILITY REPRESENTATIVE DATE

?

© 2000, 2001 University of California

HISTORY OF REVISIONS

Revision No.	Date	Pages Revised	Reason for Change
0	05/04/00	—	New report (TWCP-03938)
1	12/04/00	All	Make report a controlled document and respond to CAR-00-036
2		All	Respond to CBFO comments and update with new AK information

CONTENTS

Section **Page**

ACRONYMS iv

TA-55 PROCESS/STATUS (P/S) CODE INDEX vi

PROCESS ACCEPTABLE KNOWLEDGE SUMMARY vii

1.0 INTRODUCTION 1

2.0 METHODOLOGY USED TO SEARCH FOR AK RECORDS 1

3.0 DESCRIPTION OF THE PROCESS WASTE 3
Insert new 3.2
3.1 Facility and Mission 3
3.~~2~~3 Waste Physical Form and Content Description 3
3.~~3~~4 Waste Volume and Time Period of Waste Generation 4
3.~~4~~5 Waste Generation Processes 4
3.~~5~~6 Material Inputs to the Waste Generation Processes 16

4.0 ASSIGNMENT OF EPA HAZARDOUS WASTE NUMBERS 19
4.1 F, K, and P Listings 21
4.2 Toxicity Listings 21

5.0 VERIFICATION THAT IGNITABLE, REACTIVE, AND CORROSIVE WASTES WERE EXCLUDED 22

6.0 VERIFICATION THAT INCOMPATIBLE CHEMICALS WERE PROHIBITED 23

7.0 VERIFICATION THAT THERE ARE NO COMPRESSED GASES, FREE LIQUIDS, NONRADIONUCLIDE PYROPHORICS, SEALED CONTAINERS GREATER THAN FOUR LITERS IN VOLUME, OR >1% RADIONUCLIDE PYROPHORICS ... 24

8.0 VERIFICATION THAT THERE ARE NO POLYCHLORINATED BIPHENYLS (PCBs) IN THE WASTE STREAM 24

9.0 CITED PROCEDURES AND REQUIREMENTS DOCUMENTS 25

Tables

1 Process Feed Materials for Special Processing 17
2 Average Isotopic Content of Plutonium Material Types and Enrichments 19
3 Chemical Inputs to Processes Described in This Report 20

Attachments

1 Acceptable Knowledge Roadmap (9 pages)
2 LANL and TA-55 Sites Maps (2 pages)
3 Timeline for Special Processing (3 pages)
4 Process Inputs and Outputs (3 pages)
5 Simplified Process Flow Diagram for Special Processing (1 page)

Change all 3.4.... to 3.5.---

TA-55 PROCESS/STATUS (P/S) CODE INDEX

Note: This index indicates the main process AK summary report and report section that covers each P/S code mentioned in this report.

P/S Code	P/S Name	Process AK Summary Report and Report Section*	
ACC	Ammonium Chloride Conversion	Special Processing	3.4.8, Att. 4
ACD	Cascade Dissolver	Special Processing	3.4.1, Att. 4
CA	Casting	Metal Operation Processes	3.4.2, Att. 4
CF	Cement Fixation	Nitrate Operations	3.4.5, Att. 4
DO	Dissolution of Oxide	Special Processing	3.4.3, 3.4.5, 3.4.7, Att. 4
EV	Evaporator	Nitrate Operations	3.4.4, Att. 4
HP	Cement Fixation	Nitrate Operations	3.4.5, Att. 4
IAM	Inspection and Measurement	Special Processing	3.4.1, Att. 4
IX	Ion Exchange	Special Processing	3.4.2, Att. 4
MA	Machining	Metal Operation Processes	3.4.2, Att. 4
PI	Preparation of Isotopes	Special Processing	3.4.4, Att. 4
POSM	Processing Out-of-Specification Material	Special Processing	3.4.3, Att. 4
PPD	Pu Pellet Dissolution	Special Processing	3.4.11, Att. 4
PX	Pyrochemical R&D	Special Processing	3.4.6, 3.4.7, 3.4.8, 3.4.9, 3.4.10, Att. 4
RM	Reduction to Metal	Special Processing	3.4.4, 3.4.6, 3.4.7, Att. 4
SB	Scrap Burning	Special Processing	3.4.1, Att. 4
SBB	Ca/Al Scrubbing RD&D	Special Processing	3.4.9, Att. 4
SE	Solvent Extraction	Chloride Operations	3.4.3, Att. 4
SL	Scrap Leaching	Special Processing	3.4.1, Att. 4
VU	Vessel Unloading	Special Processing	Att. 4
VUL	Vessel Unloading	Nitrate Operations	3.4.1, Att. 4

* Process AK summary reports: Chloride Operations (TWCP-AK-2.1-002,R.2), Metal Operation Processes (TWCP-AK-2.1-003,R.2), Nitrate Operations (TWCP-AK-2.1-005,R.2), Special Processing (this report)

PROCESS ACCEPTABLE KNOWLEDGE SUMMARY

Waste-generating process: Special Processing Operations

P/S codes: ACC, ACD, DO, IAM, IX, PI, POSM, PPD, PX, RM, SB, SBB, SL, and VU

Type of waste generated:

Retrievably stored and newly generated, mixed and non-mixed debris.

Site: LANL

Facility Mission (including defense and non-defense programs):

TA-55 has extensive capabilities for the extraction and recovery of plutonium from residues and scraps generated from operations at various LANL facilities and other DOE sites in the defense complex. The recovered plutonium is converted into pure plutonium feedstock. These manufacturing and recovery operations, as well as associated maintenance operations, and TA-55 plutonium research are the sources of TRU waste contaminated scrap, residues, and debris generated at TA-55. The scrap and residues are processed to recover as much plutonium as practicable before disposal. Wastes from special processing operations are generated from plutonium recovery and purification for defense and non-defense programs; these wastes are generated and produced in the same rooms and gloveboxes and so were not segregated until August 27, 1998.

Area(s) or building(s) where the process waste was generated (including operations carried out in those areas):

TA-55 Plutonium Facility, Building PF-4, rooms 209 and 401. Plutonium operations included preparing ultra-pure plutonium metals, alloys, and compounds; and reclaiming plutonium from scrap and residues produced by numerous feed sources.

Description of the process waste (physical form and typical content description):

Waste from special processing operations consists primarily of debris waste, including cellulose-based waste, plastic-based waste, rubber, metal debris, glass debris. Some waste was also sent to nitrate operations for cement fixation.

Summary Category Group(s): S5000

Waste Matrix Code(s): S5100, S5300, S5400

Description of the waste-generating process:

The overall goal of the special processing operations is to recover plutonium from impure metal, metal alloys, scrap, and residues and produce a purified plutonium oxide product or purified Pu metal. Processes include head-end ion exchange, metal preparation, separation and purification by precipitation, and pyrochemical operations.

Process feed:

Plutonium metal or metal alloys and oxides; pyrochemical salts; crucible pieces; anode heels; and ash.

Radioisotopic content of the waste:

Variety of plutonium material types with different isotopic compositions. Am-241, Np-237, and U-234 may be present at detectable concentrations as decay products of their plutonium precursors. Some of the processes separate plutonium and americium so that the waste will usually be enriched in americium, but may also be depleted in some cases.

RCRA Constituents/EPA Hazardous Waste Numbers:

- D005 (barium) and D008 (lead): P/S code VU
- D005 (barium), D006 (cadmium), D007 (chromium), D008 (lead), and D011 (silver): P/S codes ACD, IAM, SB and SL.
- D006 (cadmium), D007 (chromium), D008 (lead), and D011 (silver): P/S code PX (zinc metal button)
- D006 (cadmium), D007 (chromium), D008 (lead), D009 (mercury), and D011 (silver): P/S code IX
- D006 (cadmium), D008 (lead), and D019 (carbon tetrachloride): P/S code PX because the salts, crucibles, and debris waste items discarded under this code may include some RCRA-regulated constituents above the toxicity characteristic limits
- D007 (chromium) and D011 (silver): P/S codes DO and POSM
- D008 (lead): metal waste debris from all P/S codes in special processing, except ACD and PPD, due to disposal of leaded gloves; after May 1992, leaded gloves were separated from other metal debris
- No F, K or P codes

Process waste volume (if known):

Waste volumes for each P/S code have not been tracked. Instead, waste items are segregated into similar material types and packaged in waste containers. Waste containers are segregated into waste streams in the Sampling Plan, and waste stream volumes are reported in that document.

Years of generation for the process waste: 1980–present

PROCESS ACCEPTABLE KNOWLEDGE SUMMARY REPORT FOR SPECIAL PROCESSING AT TA-55

1.0 INTRODUCTION

All transuranic (TRU) waste must be sufficiently characterized and certified before it is shipped to the Waste Isolation Pilot Plant (WIPP). The U.S. Environmental Protection Agency (EPA) allows use of acceptable knowledge (AK) for waste characterization. EPA uses the term AK in its guidance document, *Waste Analysis at Facilities that Generate, Treat, Store and Dispose of Hazardous Waste.* Attachment B, Waste Analysis Plan, to the *Hazardous Waste Facility Permit Issued to the Waste Isolation Pilot Plant* (EPA No. NM4890139088) (WIPP WAP) defines AK and provides guidelines on how AK should be obtained and documented.

This process AK summary report was prepared in accordance with *Acceptable Knowledge Documentation* (TWCP-QP-1.1-021 ~~R.5~~). The primary purpose of this report is to systematically organize, evaluate, and summarize detailed AK information about ~~individual~~ processes that generate TRU waste in the Plutonium Facility at Technical Area (TA) 55, one of the TRU waste generators ~~used by one of the TRU-waste generators~~ at Los Alamos National Laboratory (LANL). By doing so, this report provides detailed technical support for ~~one or more~~ several waste stream AK summary reports that include these process wastes.

2.0 METHODOLOGY USED TO SEARCH FOR AK RECORDS

The AK search for the information related to ~~Technical Area~~ TA-55 waste streams resulting from special processing covered:

- Review of the *Los Alamos National Laboratory Transuranic Waste Characterization Sampling Plan* (TWCP-PLAN-0.2.7-001 ~~R.3~~) (Sampling Plan) that includes information regarding all TRU waste streams

- Review of documents related to waste generation and waste management activities at TA-55 as listed on the Acceptable Knowledge Roadmap (Attachment 1)

- Interviews with personnel involved with waste generation and waste management at TA-55 as listed on the Acceptable Knowledge Roadmap (Attachment 1)

NOTE: Much of the AK information related to special processing is contained in Transuranic Waste Characterization/Certification Project (TWCP) Record No. TWCP-3543. Individual documents in this record have been assigned a separate identifier, SP-nn, where nn is a sequential 1- or 2-digit number. This referencing nomenclature is used throughout this report and its attachments.

- Analyses of individual processes generating waste, and evaluations of the potential for Resource Conservation and Recovery Act (RCRA)-regulated constituents to be

3.0 DESCRIPTION OF THE PROCESS WASTE

The following sections describe processes used in special processing, and identify the resulting wastes as well as outputs that are sent to other operations, such as nitrate operations, for further processing.

3.1 Facility and Mission

The TA-55 Plutonium Facility (Building PF-4) recovers plutonium from scrap and residues generated throughout the U.S. Department of Energy (DOE) defense complex, and processes it into pure plutonium oxide for conversion to metal and other products. A LANL site map and a detailed map of the buildings at TA-55, including Building PF-4, are shown in Attachment 2.

Most processes in special processing were solely defense related (TWCP-614, TWCP-4162). However, wastes from various processes were not always segregated by funding source, waste-generating process, or waste-generating location (e.g., room or glovebox) until recently (August 27, 1998), but rather were segregated and packaged based on waste type (TWCP-887, TWCP-4162, TWCP-4167) as well as material type. For example, plutonium material type MT-42 (enriched in Pu-242) has always been segregated from other wastes; this material type is exclusively defense-related. Similarly, plutonium material type MT-83 (enriched in Pu-238) is also segregated from other wastes; but this material type is not used solely for defense activities. Consequently, a single waste container often contains wastes from multiple processes. Some debris waste was also co-mingled with room trash related to these same operations (both defense and non-defense), and was initially boxed as low-level waste. Subsequently, some of these waste boxes were returned for disposal in drums as TRU waste when on-site radioassay results showed them exceeding the low-level discard limits (DLs) (TWCP-816).

Insert new text from file Process AK Section 3-2.doc

3.2 Basis, Rationale, and Assumptions Used to Delineate the Waste Stream(s)

3.3 Waste Physical Form and Content Description

Wastes generated during special processing, primarily debris wastes and wastes entered into the cement fixation process or sent to the Radioactive Liquid Waste Treatment Facility (RLWTF) at TA-50 ~~are covered by this process AK report~~. General debris waste categories from ~~special processing~~ include

Stet, except add comma

- Cellulose-based waste (for example, paper, cloth)
- Plastic-based waste (for example, gloves, tape, labware)
- Rubber
- Magnesium oxide crucibles

Dental rubber

- Metal debris (for example, tantalum crucibles, wire, hose clamps, tools, labware)
- Glass debris

These debris items are contaminated with small amounts of radioactive and chemical substances from special processing.

3.4 Waste Volume and Time Period of Waste Generation

This report covers waste streams generated from 1980, when special processing first began in Building PF-4, to the present. Process wastes from special processing have different associated EPA hazardous waste numbers (HWNs) depending on the time period during which they were generated. The P/S codes, their time period of generation, and corresponding EPA HWNs are shown graphically in Attachment 3, Timeline for Special Processing.

Waste volumes for each P/S code have not been tracked. Instead, waste items are segregated into similar material types and packaged in waste containers. Waste containers are assigned to waste streams in the Sampling Plan, and waste stream volumes are reported in that document.

3.5 Waste Generation Processes

The following subsections describe the generation of waste by special processing, as well as product and waste outputs to other processes or operations.

Manufacturing and research operations performed at TA-55 in the production of plutonium also generate plutonium-contaminated scrap and residues. These residues are processed to recover as much plutonium as is practical. TA-55 has extensive capabilities for the extraction and recovery of plutonium from residues and scraps generated from operations at various LANL facilities and other DOE sites. These recovery and manufacturing operations, associated maintenance operations, and TA-55 plutonium research are the sources of TRU waste generated at TA-55.

Detailed background information about the TA-55 plutonium recovery processes can be found in *Waste from Plutonium Conversion and Scrap Recovery Operations* (TWCP-352 and TWCP-886).

Each of these process categories is described below. Timelines for ~~these~~ individual processes are presented in Attachment 3. A complete listing of P/S codes for special processing, their descriptions, feed materials, and inputs and outputs is found in Attachment 4. A simplified process flow diagram for special processing is found in Attachment 5.

This report focuses on special processing activities, which include the following:

- head-end operations (P/S codes ACD, IAM, SB and SL)
- nitrate anion exchange (P/S code IX)
- chloride anion exchange (P/S code DO and POSM)
- metal preparation (P/S codes RM and PI)
- separation and purification by precipitation (P/S code DO)

over →

3.5.1 Head-End Operations (P/S Codes ACD, IAM, SB, and SL)

Head-end operations involve incineration, calcination, leaching of noncombustible materials (including ash), conversion of pyrophoric metal and compounds to stable oxides, and dissolution. P/S code IAM is also classified as a head-end operation in this report because it involves inspection of scrap items from the vault to determine an appropriate disposition for them.

Combustible wastes are burned in air in a ~~furnace~~ ~~prior to being calcined~~ ~~Calcination uses~~ combustion chamber, and the ash is screened and the fines (< #12 sieve) are sent to the rotary ~~calciner (SP-42)~~ (TWCP-3543/SP-42). rotary calciners to remove incompletely oxidized organic material from some types of feed prior to leaching or dissolution in nitric acid (SP-5, SP-43 [both in TWCP-3543]). This treatment step is quite advantageous for the following reasons:

- Organic materials sometimes react vigorously when treated with strong nitric acid,
- Emulsions that form when nitric acid reacts with organic material impede plutonium recovery, and
- Some of the organic materials dissolve in nitric acid to yield a dark solution that in turn poisons the ion-exchange resin.

(P/S code RC, ~~covered~~ described in TWCP-AK-2.1-005)

Glovebox operations and research and development (R&D) projects routinely generate non-plutonium scrap metal, glass, high-efficiency particulate air (HEPA) filters, tools, plastics, glovebox sweepings, sand, slag, crucibles, etc. Leaching in nitric acid and hydrofluoric acid, or pickling these materials in hydrochloric acid, is a relatively easy but incomplete decontamination method (SP-1, SP-2, SP-3, and SP-4 [all in TWCP-3543]).

Conversion of pyrophoric metals and compounds to stable oxides is usually done by calcination in a controlled oxygen atmosphere and at temperatures less than 600°C. Low-fired oxides are easier to dissolve in nitric acid (TWCP-3543/SP-42).

Dissolution of oxide prepares plutonium for purification by nitrate ion exchange processing and oxalate precipitation.

Under P/S code IAM, MT42 scrap items (gloves, ash, rags and other items that may contain RCRA-listed metals) were taken from the vault, visually inspected for material type, and remeasured by non-destructive assay. (MT42 is the designation for plutonium that is enriched in Pu-242. See section 3.6.2 and Table 2.) If the Pu content was less than the DL, the items were discarded. Material that was not discardable, but was

within specification, would be sent to P/S codes DO or SL for treatment or was returned to the vault. Out-of-specification material was sent to P/S code POSM for processing. Activities conducted under POSM are similar to those for P/S code DO (section 3.~~4~~.5).

3.5.2 Nitrate Anion Exchange (P/S code IX)

Nitrate anion exchange is the primary method used at LANL for the aqueous concentration of plutonium. The most commonly used ion exchange resin is a polyvinyl pyridine base macroporous-type resin. Information on the use ~~of this~~ method for processing plutonium material type MT 42 (see section 3.~~6~~.2 and Table 2), is provided in references SP-6, SP-7, SP-8, SP-9, ~~SP-34~~ (all in TWCP-3543). Nitrate anion exchange for MT 52 is discussed in the nitrate operations process AK report (*Process Acceptable Knowledge Summary Reports for Nitrate Operations at TA-55* [TWCP-AK-2.1-005], section 3.~~4~~.3).

Nitrate anion exchange is a very powerful technique ~~for~~ recovery and separation of plutonium from most elements in the periodic table. At constant acidity, the amount of plutonium absorption onto the resin increases with nitrate concentration. Aluminum nitrate is added to the column to complex with fluoride and oxalate anions, which would otherwise complex with plutonium and prevent its full absorption onto the resin. The plutonium must be in the +IV oxidation state for absorption onto the column and, because plutonium can exist in five different oxidation states in aqueous solution, the oxidation state must be adjusted by careful selection of the sequence and type of reducing and oxidizing agents.

Major reducing and oxidizing agents used in plutonium production operations include hydroxylamine nitrate ($NH_2OH{\bullet}HNO_3$), ferrous ammonium sulfate [$Fe(SO_4)\ (NH_4)_2SO_4{\bullet}6H_2O$], sodium nitrite ($NaNO_2$), urea [$CO(NH_2)_2$] and hydrogen peroxide (H_2O_2).

Ion exchange operations are typically divided into the following steps: (1) column conditioning, (2) feed oxidation state adjustment, (3) loading plutonium in nitric acid, (4) washing with 7 molar nitric acid, (5) elution with hydroxylamine nitrate, and (6) readjustment of the column from the low-acid elution step to 7–8 molar nitric acid for the next column run.

Effluents from nitrate ion exchange, when discardable, are sent to P/S code EV (part of nitrate operations), where they are reduced in volume by evaporation. Similar to waste from ion exchange processes in nitrate operations (e.g., P/S codes DS and LR), these wastes may be contaminated with the heavy metals cadmium (D006), chromium (D007), lead (D008), mercury (D009), and silver (D011). The evaporator

salts are sent to cement fixation (P/S code CF, also part of nitrate operations). The distillate is sent to the RLWTF at TA-50.

3.5.3 Chloride Anion Exchange (P/S codes DO and POSM)

Chloride salts are an important class of residues and are by-products of pyrochemical operations that are also important to Special Processing operations. In addition, plutonium must be recovered from the hydrochloric acid leach solutions employed during pickling (also conducted under P/S code DO). Chloride anion exchange is the method of choice for recovery of plutonium from these chloride-based processes (SP-14, SP-16, SP-30, SP-33, SP-34 [all in TWCP-3543]). Chloride anion exchange is a more recent innovation in Special Processing operations. It was probably implemented sometime in the early 1990s (TWCP-3543/SP-37). Prior to that, hydroxide precipitation was used and is discussed in the chloride operations process AK report (TWCP-AK-2.1-002,R.1, section 3.4.4).

Special Processing operations use chloride anion exchange to recover plutonium from salts produced by multicycle direct oxide reduction (MCDOR), molten salt extraction (MSE), electrorefining (ER), and pyroredox operations. The general chloride anion exchange process consists of the following steps: (1) dissolution of salt in 2-4 molar hydrochloric acid, (2) adjustment of plutonium oxidation state, chloride concentrations, and pH using 12 molar hydrochloric acid and sodium nitrite, (3) loading of feed solution onto the ion exchange column, (4) washing with 8 molar hydrochloric acid, (5) elution of plutonium from the column with 0.5 molar hydrochloric acid and 0.5 molar hydroxylamine hydrochloride, and (6) precipitation of plutonium oxalate by addition of solid oxalic acid. Chloride concentrations in the column eluant were measured by titration using silver nitrate and potassium dichromate until the end of 1992 when this method was replaced with a silver electrode.

Activities conducted under P/S code POSM are similar to those described above for P/S code DO. Feed materials to P/S code POSM are provided by P/S code IAM (section 3.4.1).

3.5.4 Metal Preparation (P/S code RM and PI)

Conversion of plutonium to an oxide from scrap can be used as feed material for metal preparation (TWCP-3543/SP-17). The oxide compound is reduced to metal, often an impure form; however, the oxide would not contribute RCRA-listed heavy metals to wastes produced during metal preparation (TWCP-3543/SP-44). In pyrochemical

Both oxalate and peroxide filtrates are amenable to recovery of residual plutonium by hydroxide precipitation and subsequent disposal of the filtrate. The hydroxide cake can then be recycled to recover and purify the plutonium and americium if above the discard level, or can be discarded if these radionuclide concentrations are below the discard level.

3.5.6 Pyrochemical Operations (P/S codes PX and RM)

Pyrochemical operations for MT 42 (defined in section ~~5.2.1~~ 3.6.2) include MCDOR with in-situ regeneration and electrorefining (P/S code RM) and MSE (P/S code RM), and oxide reduction (P/S code RM) (SP-17, SP-18, SP-19, SP-20, SP-21 [all in TWCP-3543]). Pyrochemical R&D efforts for MT 52 in the Special Processing area were done under P/S code PX. This included MCDOR with in-situ regeneration, electrorefining, pyroredox, preparation of $PuCl_3$ using chlorine gas and carbon tetrachloride, and MSE (SP-26, SP-27 SP-28, SP-29 [all in TWCP-3543]). Cadmium and lead were used occasionally as secondary solvent metals in P/S code PX.

3.5.7 Direct Oxide Reduction (DOR) Processes (P/S codes PX and RM)

3.5.7.1 Single-Pass DOR Process

Prior to the MCDOR process, a single pass DOR process was used for plutonium oxide (TWCP-2507, PYRO-14/TWCP-3542). Plutonium oxide and calcium metal are reacted in molten calcium chloride ($CaCl_2$) or $CaCl_2$ mixed with calcium fluoride (CaF_2), to produce plutonium metal. The reaction is conducted in a magnesium oxide (MgO) crucible at 820°C to 875°C. Any arsenic, mercury or selenium present in the impure plutonium oxide would be driven off due to their volatility at this high temperature (TWCP-1258). The reaction proceeds to completion when excess calcium is present and when sufficient $CaCl_2$ is available to dissolve the calcium oxide (CaO) product.

After cooling, a plutonium metal button is removed by breaking the crucible. A layer of salt above the button contains unreacted oxide and calcium metal shot, which was sometimes recovered by addition of fresh salt plus additional calcium metal. The process was then rerun. If the unreacted oxide and metal shot did not process after the second run, the material was sent to aqueous recovery. The product plutonium metal contains significant impurities, including additional metal impurities derived from the calcium metal

3.6 Material Inputs to the Waste Generation Processes

Attachment 4 lists P/S codes for special processing at TA-55, including process descriptions, feed material, other process inputs, process outputs, and type of waste. The feed materials for special processing consist of the general types of materials listed in Table 1 that are obtained from the storage vault, as process output from other P/S codes, or from sources outside TA-55, including other DOE sites.

The remainder of this section summarizes the nature of the process waste in terms of its physical, chemical and radioisotopic characteristics.

3.6.1 Physical Waste Form Identification

Solid waste from special processing primarily consists of debris waste. Debris waste contains glassware, plastics, ceramic materials, paper, rags, HEPA filters, metal containers, brushes, and small tools. Leaded gloves may also be generated as process waste. Between 1987 and May 1992, leaded gloves were segregated from combustible debris and discarded in the metal debris waste stream because of concern that explosive lead oxides might form if the combustible debris waste was incinerated. Since May 1992, leaded gloves have been routinely segregated from other metal debris waste and assigned to a separate leaded-glove waste stream. In addition, caustic solutions from hydroxide precipitation are discarded through the waste line to the RLWTF at TA-50.

Prior to 1987, leaded gloves were discarded in ~~the~~ combustible and non-combustible waste streams.

g

Because items from several different processes are usually combined into individual waste drums, the physical waste form of each drum must be determined independently. This information is documented on a Waste Origination and Disposition Form (WODF) by the waste generator according to controlled procedures. The P/S code for each waste item is also documented on this form. In the packaging process, a standard form, the Discardable Waste Log Sheet (DWLS), was used to list each item and record its matrix material. This form was signed by the waste packager, reviewed, and approved by quality assurance (QA) personnel. Example forms for one drum of waste generated can be viewed in record TWCP-2513.

3.6.2 Radionuclide Content Identification

The primary plutonium material type inputs for plutonium feed materials at Building PF-4 are listed in Table 2. The designation *material type* (e.g., MT 52) is used within the DOE Complex to describe the isotopic composition of common blends of radioactive materials used within the Complex. The material type notation was developed because it is a convenient way to describe material types that have very consistent isotopic compositions. Table 2 indicates the isotopic composition of the material types at the time the waste was characterized. The material type provides the basis for estimating an upper bound for U-234, U-235, and Am-241 contents based on the rate of decay of their precursors, Pu-238, Pu-239 and Pu-241, respectively.* The results of these calculations are ~~also~~ tabulated in Table 2, assuming (a) none of these isotopes were initially present in the material, (b) the oldest Pu material in inventory dates back to 1 January 1960, and (c) the waste was packaged on 1 January 1996, making it 36 years old (TWCP-698). start new ¶ stet

The material type used in the process generating each waste item was documented on the WODF and DWLS. However, some of the plutonium recovery processes separate plutonium and americium, or plutonium and uranium, so that their relative ratios may be altered in the process outputs and wastes. Waste items may be either depleted or enriched in ~~americium~~ depending on whether the source of contamination is the process product or the process residues (TWCP-882). ~~or uranium~~ Am-241 or U-234

Residues submitted for reprocessing often contain Np-237, the decay product of Am-241 (half-life, 458 yr). This radioisotope is expected to be present in minor amounts in nearly all debris waste from special processing at TA-55.

In general, uranium and its isotopes are expected to be present only at trace levels, if at all. U-238 would only be present if purposefully added to the feed material. U-235 in growth from the decay of Pu-239 (half-life, 24,120 years) would be negligible due to the long half-life of Pu-239. Uranium-234 would be present in MT 83 as a decay product of Pu-238 (half-life, 87.74 years). After 20 years, 14.6 percent of the initial Pu-238 would have decayed to U-234. For MT 83 with an initial content of 83.89 percent Pu-238, the atomic ratio U-234 to total Pu would be about 0.14. ~~No U-236 is present.~~ Pa-231 and Cs-137 may be present in trace amounts because of their widespread presence as contaminants in TA-55 operations (TWCP-5165, TWCP-5165). During TWCP characterization, the contents of each waste package undergo non-destructive analysis to provide detailed radioisotopic data. These data will be used to evaluate the accuracy of AK information in accordance with *Waste Characterization Data Reconciliation with*

Insert above:
* The purpose of such bounding calculations is to provide a basis for identifying significant enrichment or depletion of one radionuclide versus another, based on radioassays of individual waste containers.

- Waste management inspectors perform visual examination of the waste prior to its initial packaging, thus allowing the inspectors to verify the generator's WODF statement (TWCP-701, Sections 3.8.5 to 3.8.6).

Stet, except to add (TWCP-4720 at the end.

- In addition to the above-mentioned prohibitions on explosives in wastes, explosives were prohibited from TA-55 until installation of the Impact Test Facility in the early 1990s. ~~Explosives continue to be banned in the solid waste streams up to the present time. If a misfire should occur, the requirement is to destroy the unspent powder by burning.~~ ~~In case of a misfire or unconsumed explosives, a procedure is in place at TA-55 to ensure that explosives do not enter the waste stream~~ (TWCP-4720).
- The Waste Profile Request Form (WPRF), which has been in use at LANL since 1991, includes a statement which must be authenticated by the waste generator, that the waste is not ignitable (flash point >200 °F), reactive, or corrosive.
- The TA-55 Generator Attachments to the Certification Plan were updated in 1995 (TWCP-700) but the prohibition on liquids in the solid waste, and the waste management inspection, remained in effect.

Hence, since the inception of operations at TA-55, corrosive and reactive wastes have been excluded from TA-55 solid wastes through the prohibition of liquids.

The absence of these prohibited items is verified through radiography of each waste container and visual examination of selected containers during TWCP characterization activities. These data will be used to assess the accuracy of AK information in accordance with *Reconciliation of Visual Examination and Radiography Information* (TWCP-QP-1.1-028). Any free liquids are remediated, or the container is tagged as non-compliant by filing a Prohibited Waste Report in accordance with *Nonconformance Reporting and Tracking* (TWCP-QP-1.1-007).

6.0 VERIFICATION THAT INCOMPATIBLE CHEMICALS WERE PROHIBITED

Section ~~6~~ 5.0 summarizes administrative controls in place at TA-55 that prohibit incompatible chemicals in the waste, and measures taken to verify their absence. In addition, all waste containers shipped from TA-55 to TA-54 for storage were evaluated for potentially incompatible chemicals in accordance with 49 *Code of Federal Regulations* (CFR) Subpart C—Segregation and separation chart of hazardous materials; Section 177.848, Segregation of hazardous materials, and were determined to be in compliance with this requirement.

7.0 VERIFICATION THAT THERE ARE NO COMPRESSED GASES, FREE LIQUIDS, NONRADIONUCLIDE PYROPHORICS, SEALED CONTAINERS GREATER THAN FOUR LITERS IN VOLUME, OR >1% RADIONUCLIDE PYROPHORICS

Most gases used at the TA-55 Plutonium Facility are stored outside the building and the gas is plumbed into the glovebox from outside the building (TWCP-4164). Occasionally, a lecture bottle may have been used for a process inside the building, but these bottles were kept outside of the glovebox with the gas plumbed into the glovebox. Consequently, compressed gas cylinders or containers are not expected to be in any of the TRU wastes generated by TA-55 operations.

Spray cans, especially WD-40, were in common use in TA-55 gloveboxes until May 1992 (TWCP-4166). These were routinely discarded as metal debris waste. From 1988 until May 1992, the protocol was to vent or puncture the spray cans inside the glovebox; venting was indicated by inserting a metal wire into the valve. After May 1992, spray cans were no longer used in gloveboxes.

For items of pyrochemical salt waste, the procedures of oxygen sparging and/or carbonate oxidation have been used since May 1987 to ensure that pyrophorics were oxidized. In addition, screening tests on similar pyrochemical salts and residues (which contain higher amounts of plutonium) at the Rocky Flats Environmental Technology Site (TWCP-2501) have shown (1) no autoignition, (2) no spontaneous combustion, (3) and no sparking. Experimental results on the reactivity of LANL DOR salt with water and the reactivity in air of heated calcium metal nodules from DOR salts indicate the absence of "dangerous when wet materials" and pyrophoricity in these salts (TWCP-3730, TWCP-3731, TWCP-3732).

Verification that individual waste drums do not contain compressed gases, free liquids, or sealed containers greater than 4 L in volume is obtained from radiography of each waste containers and visual examination of selected containers during TWCP characterization activities. Any free liquids are remediated, and any sealed containers greater than 4 L in volume, or unpunctured or unvented gas containers, are removed; or else the container is tagged as non-compliant by filing a Prohibited Waste Report in accordance with *Nonconformance Reporting and Tracking* (TWCP-QP-~~1.1-007~~). For administrative controls on the prohibition of pyrophorics, see Sections ~~6~~ 5.0 and ~~7~~ 6.0.

8.0 VERIFICATION THAT THERE ARE NO POLYCHLORINATED BIPHENYLS (PCBs) IN THE WASTE STREAM

No PCBs were introduced into special processing, based on documentation in TA-55 procedures reviewed during the AK investigation and summarized in the process inputs listed in Table 1, Table 3, and Attachment 4. Oils used in the reviewed processes include vacuum pump oils, and cutting fluids used for cooling purposes; none of these oils are known to contain PCBs. All transformers known to contain PCBs have been tracked from

the time of startup of TA-55 in 1978. Whenever any transformer oil is drained, it is handled by a subcontractor who is wholly responsible for its disposal (TWCP-AK-2.1-005,R.2, Section ~~9~~ 8.0). This oil does not enter the LANL disposal operations.

9.0 CITED PROCEDURES AND REQUIREMENTS DOCUMENTS

- 40 CFR Part 261, Subpart C—Characteristics of hazardous waste, Sections 261.21 (*Characteristic of ignitability*), 261.22 (*Characteristic of corrosivity*), 261.23 (*Characteristic of reactivity*), and 261.24 (*Toxicity characteristic*)

- 40 CFR Part 261, Subpart D—Lists of hazardous waste, Sections 261.31 *(Hazardous wastes from non-specific sources),* 261.32 *(Hazardous wastes from specific sources),* and 261.33 *(Discarded commercial chemical products, off-specification species, container residues, and spill residues thereof)*

- 49 CFR Subpart C—Segregation and separation chart of hazardous materials. Section 177.848, *Segregation of hazardous materials*

- *Acceptable Knowledge Documentation* (TWCP-QP-1.1-021 ~~R.5~~)

- *Nonconformance Reporting and Tracking* (TWCP-QP-1.1-007)

- *Reconciliation of Visual Examination and Radiography Information* (TWCP-QP-1.1-028)

- *Waste Acceptance Criteria for the Waste Isolation Pilot Plant* (DOE/WIPP-069)

- *Waste Analysis at Facilities that Generate, Treat, Store and Dispose of Hazardous Waste* (EPA/OSWER 9938.4-03)

- Waste Analysis Plan, Attachment B to the *Hazardous Waste Facility Permit Issued to the Waste Isolation Pilot Plant* (EPA No. NM4890139088)

- *Waste Characterization Data Reconciliation with Acceptable Knowledge* (TWCP-DTP-1.2-064)

TWCP Record No.	Information Category Code	Information	Source	Summary	Limitations
TWCP-3543 (SP-34) (UCNI)	C	Procedure for Leaching of Non-combustible Materials in Nitric Acid (P/S IX or NC)	TA-55 Document, 235-MPP-R00	Contains materials used in the process	No RCRA analyses documents
TWCP-3543 (SP-37) (UCNI)	D	Acceptable Knowledge Interview Form for Special Processing	Jim Foxx, NMT-7 1/19/00	SME review of Special Processing AK Report	Addresses specific questions
TWCP-3543 (SP-38) (UCNI)	D	Acceptable Knowledge Interview Form for Special Processing	Jim Foxx, NMT-7 2/3/00	Answers to questions about P/S code PPD and to MT42 waste volume	Addresses specific questions
TWCP-3543 (SP-39) (UCNI)	D	Procedure for Direct Oxide Reduction R&D	TA-55 Document 422-MPP-R00	Contains materials used in the process	No RCRA analyses documents
TWCP-3543 (SP-41) (UCNI)	C	Procedure for Generation of 242PuF6	TA-55 Document 122-LPN-R00	Contains materials used in the process	No RCRA analyses documents
TWCP-3543 (SP-42) (UCNI)[~~add to Section 3.4.2.~~]	C	Procedure for Burning of Combustibles (in head-end operations)	TA-55 Document, 221-MPP-R00	Contains materials used in the process	Contains no chemical list: no chemicals used. No P/S code
TWCP-3543 (SP-43) (UCNI)	C	Alternate Procedure for Dissolution of Oxide Derived from Calcination of Oxalate	TA-55 Document, 448-REC-R00	Contains materials used in the process, mineral acids used	No chemical list: no P/S code
TWCP-3543 (SP-44) (UCNI)	D	Acceptable Knowledge Interview Form for Special Processing	Jim Foxx, NMT-7 8/2/00	Answer to question as to whether Pu metal, pure or impure, is a contributor of RCRA-listed metals	Addresses specific questions
TWCP-3543 (SP-45) (UCNI)	D	Acceptable Knowledge Interview Form for Special Processing	Jim Foxx, NMT-7	Answer to questions regarding P/S codes PPD, RAP2, SBB and SCB	Addresses specific questions
TWCP-3730 (UCNI)	B	Pyrophoricity characterization	Characterization of Direct Oxide Salts (LA-CP-95-0098)	Hydrogen generation and pyrophoricity of DOR salts. Also gives reference for MSE, ER, and Cr-containing salts.	None

* Information Category Codes: A = forms intended for use in waste certification, B = data from controlled databases and published documents, C = unpublished data, and D = interviews, memos, and letters

TWCP Record No.	Information Category Code	Information	Source	Summary	Limitations
TWCP-3731	D	Sodium pyrophoricity in pyrochemical salts	Memo (MST-12-ARO-88-052)	Treatment of sodium in salts is effective	Sodium only
TWCP-3732	C	Experimental data on calcium pyrophoricity in salts	Memo (MST-12-ARO-88-077)	Treatment of calcium in salts is effective	Calcium only
TWCP-3943	B	Procedure for Waste Management at TA-55	TA-55 Document, 406-GEN-R00	Contains information on waste management procedures in 1978	None, but doesn't address today's waste management concerns
TWCP-4162	D	Answers to questions about P/S codes PB, PuBe, CC, MB, MS, FF, BF, and other issues	Interview with Jim Foxx, 10/12/00	Answers to questions on use of asbestos at TA-55, non-defense activities, and specific P/S codes in chloride operations.	None
TWCP-4164	D	Answers to questions about various P/S codes	Interview with Jim Foxx, 10/16/00	Answers to questions on use of Ag, disposal of ash and resins, and use of gases.	None
TWCP-4166	D	Answers to questions about P/S codes DO, EV, HP, CF, OR, RM, PY	Interview with Jim Foxx, 10/17/00	Answers to questions on use of Cr and Ag, RCRA metals in cement, asbestos in furnaces and gloves, and disposal of spray cans used in gloveboxes.	None
TWCP-4167	D	Answers to questions about segregation of non-defense wastes; leachability of Ag from ash	Interview with Jim Foxx, 10/18/00	Segregation of non-defense wastes began on 27 August 1998; analytical data show that Ag in ash is below limits of regulatory concern	None
TWCP-AK-2.1-002,R.2	A	*Process Acceptable Knowledge Summary Report for Chloride Operations at TA-55*	Generators interview and TWCP AK references	Detailed information on each P/S code for chloride operations at TA-55	None
TWCP-AK-2.1-003,R.2	A	*Process Acceptable Knowledge Summary Report for Metal Operations at TA-55*	Generators interview and TWCP AK references	Detailed information on each P/S code for metal operations at TA-55	None

Insert TWCP-4720, 5164, 5165 → (copy from TWCP-AK-2.1-008, R2 AK Roadmap)

* Information Category Codes: A = forms intended for use in waste certification, B = data from controlled databases and published documents, C = unpublished data, and D = interviews, memos, and letters

TIMELINE FOR SPECIAL PROCESSING (continued)

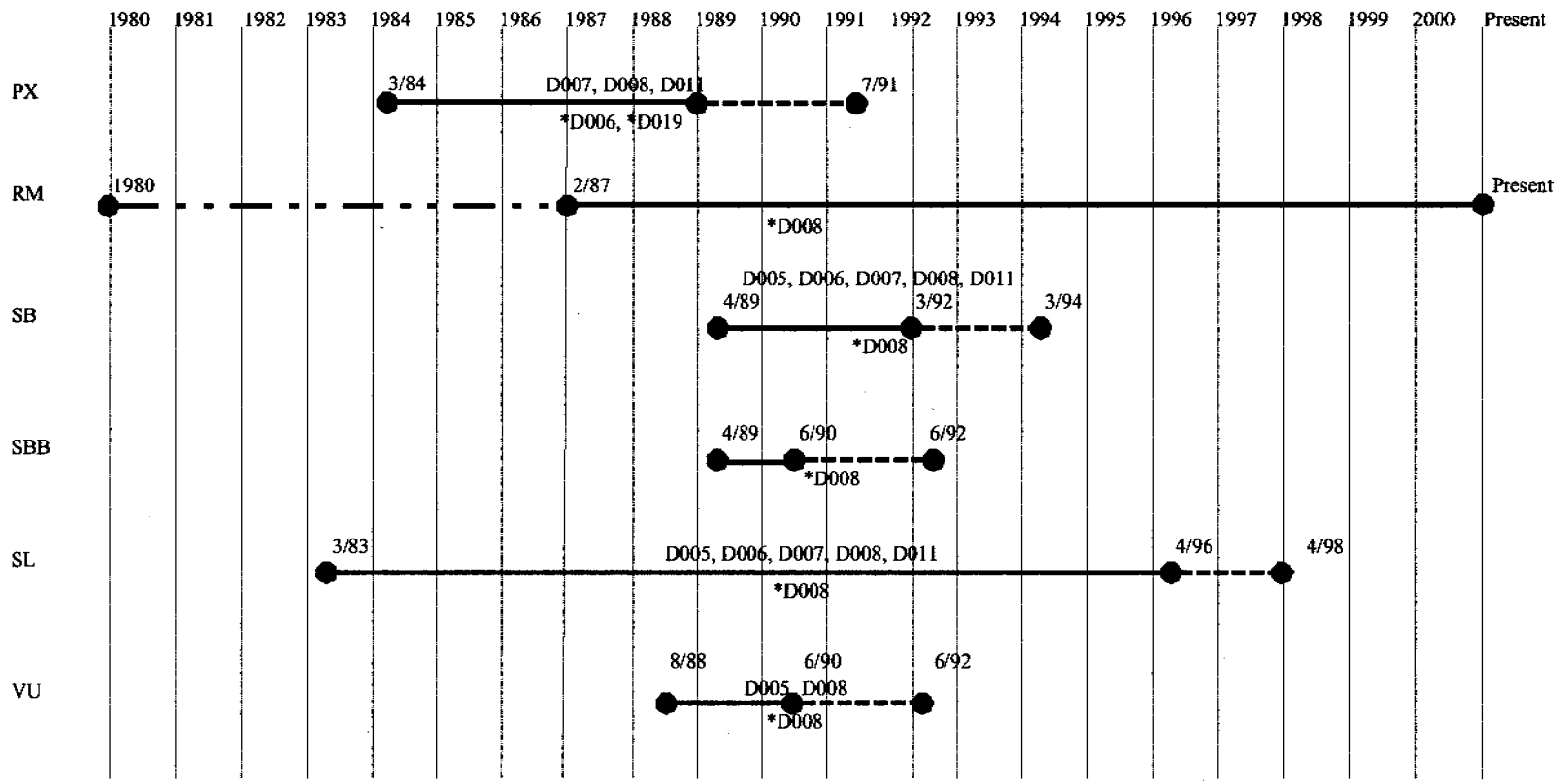

*Notes on time-dependence of EPA HWNs
D006 = applies to P/S code PX from 02/87 to 07/89
D007 = applies to P/S code DO from 1990 to mid-1993 ~~POSM ends 09/92~~
D008 = applies to leaded gloves. Prior to 1987, leaded gloves were not segregated from combustible debris. Between 1987 and May 1992, they were segregated and discarded in the metal debris waste stream. Since May 1992, they have been routinely segregated and assigned to a leaded-glove waste stream, still under the originating P/S code (TWCP-4166).
D011 = applies to P/S code DO from 1990 to mid-1993 ~~POSM ends 09/92~~
D019 = applies to P/S code PX from 04/88 to 07/89

QP-00-004,R.0
Effective Date: 06/18/03

Attachment 5–Form

TWCP-15413

RECORDS SUBMITTAL

INSTRUCTIONS: This form is prepared by the record source when submitting individual records, batch data reports, or a records package to the RMDC Center. For records packages, a Table of Contents (TOC) must also be submitted. Each record submitted requires a complete form.

MANDATORY: X To the best of my knowledge, the record(s) have no radioactive contamination.

Signature: _____

RECORD TYPE:

X Project 2010 ☐ Facility (RRES)

☐ Other: _____ ☐ UCNI ☐ Proprietary

RECORD SOURCE:

Submittal Date: 7/25/03___ Z No.: 109592_____ Name/Org: PATRICIA PATTON – RRES-CE_____

Originator: JOHN MUSGRAVE_____ Organization: NMT_____

TYPE OF RECORD/ACTION TO BE TAKEN

X Individual Record ☐ Batch Data Report ☐ Records Package (+ TOC)

X New ☐ Revision* ☐ Addition* ☐ Supersedes*

*Record Barcode Number: _____ *Review Cycle (if applicable): ☐ Yes ☐ No ☐ NA

RECORD ID NUMBER: (e.g., memo symbol number, procedure (include revision), deficiency number, batch data report number, unique record identifier if applicable):

TWCP-AK-2.1-004, R.2

Record Date: 5/17/01____ Physical Page Count: 198 X Single Sided ☐ Double Sided

Category Number: (from page two): 07_____

RECORD TITLE, SUBJECT, AND/OR KEYWORDS:

TWCP-AK-2.1-004, R.2/IC2 Process AK Report for Miscellaneous Operations at TA-55 (INCLUDES INTERIM CHANGES 1 & 2) - LA-UR-01-2559 – LA-UR-02-1714

RECORD CENTER USE ONLY

☑ Accepted Date: 7-25-03 ☐ Return Date: _____

Signature: _____ Resubmitted: _____

RIDs Type: LT

Scan Date: _____ By: _____ Index Date: _____ By: _____

X-Sender: chsmith@norris-mail.lanl.gov
X-Mailer: QUALCOMM Windows Eudora Version 5.1
Date: Thu, 24 Jul 2003 10:37:16 -0600
To: pgp@lanl.gov
From: Cathy Smith <chsmith@lanl.gov>
Subject: Please retire Process AK Reports
Cc: sgw@lanl.gov
X-Scanned-By: MIMEDefang 2.35

Hi Patsy,

As we discussed yesterday, here is the list of Process AK Reports that we would like to retire as controlled documents and submit as records to RMDC. Could you let Betty Humphrey and myself know when you have the record IDs - we need to update the references in the main AKIS document.

Thanks a million!

Cheers, Cathy

The following can be turned into Records, to be referenced in our AKIS or AK Summaries...

1. TWCP-AK-2.1-002, R.2/IC1 Process AK Report for Chloride Operations at TA-55

2. TWCP-AK-2.1-003, R.2/IC1 Process AK Report for Metal Operations Processes at TA-55

3. TWCP-AK-2.1-004, R.2/IC2 Process AK Report for Miscellaneous Operations at TA-55

4. TWCP-AK-2.1-005, R.2/IC1 Process AK Report for Nitrate Operations at TA-55

5. TWCP-AK-2.1-006, R.2/IC1 Process AK Report for Pyrochemical Processes at TA-55

6. TWCP-AK-2.1-007, R.2/IC1 Process AK Report for Special Processing at TA-55

7. TWCP-AK-2.1-009, R.0/IC1 Process AK Report for Pu-238 Operations at TA-55

8. TWCP-AK-2.1-013, R.0 AK Report for NG Waste from Nitrate Operations at TA-55

9. TWCP-AK-2.1-014,R.0 AK Report for NG Waste from Miscellaneous Operations at TA-55

10. TWCP-AK-2.1-016,R.0 AK Report for NG Waste from Special Processing Operations at TA-55

11. TWCP-AK-2.1-017,R.0 AK Report for NG Waste from Metal/Pyrochemical Operations at TA-55

"The simplest questions are the hardest to answer."
Northrop Frye

Catherine H. Smith
Project 2010
RRES-CE Certification Group
Risk Reduction & Environmental Stewardship Division
Phone: 667-0113 Page: 664-7104

INTERIM CHANGE REQUEST

LA-UR-02-1714

☑ TWCP ☐ WRR ☐ Other If Other, please identify: _____	**IC Number:** 2
Person Requesting this Interim Change: Sandy Wander	
DOCUMENT INFORMATION	
Document Title: Process Acceptable Knowledge Report for Miscellaneous Operations at TA-55	**Document No./Revision:** TWCP-AK-2.1-004,R.2/IC1 (LA-UR-02-1714)
Effective Date of Current Document: 06/18/01	**Document Preparer:** John Musgrave

CHANGE INFORMATION: Please ensure the following changes are made:

Section/Page	Change:	Reason/Justification:
Title Page, p.1	Delete "Summary" from title to read: "Process Acceptable Knowledge Report for Miscellaneous Operations at TA-55"	Clarification
Global	Change all occurrences of "Sampling Plan" to "AK Information Summary"	document title change
Note and 3rd column heading / pp. vi and viii	Delete "summary" from "NOTE" at top if page vi and from "*" note at bottom of page viii Change 3rd column heading on page vi and vii to read:"Process AK Report*" Delete entire 4th column	Clarification
RCRA Constituents/ EPA Hazardous Waste Numbers:/p. ix of x	Delete HRS, RD, and VS from bullet beginning D007 (chromium) Delete APD and add AC, AC1, and AC2 from bullet beginning D011 (silver)	Updated report due to typo errors found upon review. Confirmed with SME.
RCRA Constituents/ EPA Hazardous Waste Numbers:/p. ix of x	Delete "(D007 only)" following "EDC" and before "EOC" from bullet beginning D007 (chromium) as follows: EDC ~~(D007 only),~~ EOC Delete "IE" from bullet 7, 8, 9, and 12 Add "*" after D008 in bullet 10.	Per SME, D007 and D009 should apply to be conservative. Typos found during review. Editorial repair
Global search and delete / p. 2	From all references to "process AK summary report," delete "summary" to read "process AK report. From all titles that previously read "Process Acceptable Knowledge Summary Report, " delete "Summary" to read "Process Acceptable Knowledge Report."	Clarification
3.5.8/p. 20	In the third line from the bottom, replace "sand and slag" with "stainless steel"	Updated report due to typo errors found upon review. Confirmed with SME.

Table 1/p. 24	In the "Pu oxides" row, middle column, modify as follows: . . . EOC, **IE,** LIBS, ~~and~~ STF, **and VS**	Per SME, P/S code IE used high purity oxides. VS added due to typo errors found upon review.
Table 5/pp. 31, 32, 33	In AC2 row, add D038 to last column In FDL and FLU rows, add D004 to third column and last column In IE row, replace text in third and fifth columns with the word "none" and delete D005, D006, D007, D009, and D011 from the last column Add D008 and other codes to table . Also added "*D008 due to leaded gloves.	P/S code AC2, updated report due to typo errors found upon review. Confirmed with SME P/S codes FDL and FLU, updated report due to typo errors found upon review. Confirmed with SME P/S code IE, updated report, per SME. P/S code IE used high purity oxides. Updated table to reflect typo errors found during review.
Section 4.2, p. 35	Delete all P/S codes listing	Unnecessary. Information listed elsewhere
Attach. 3/pp. 1–4	Add D007, D008*, D009, D011, D018, D022, D038, F002, F005, F007 to timeline for AC1 Add D038 to timeline for AC/AC2 Add D009 to timeline for CV Add "D009" to EDC timeline Add D008* to timeline for ICP Add D008* and delete all other codes from timeline for IE Add D008* to timeline for SA Delete WM from timeline for WM/XO/X0 and create new WM timeline with a solid line from 1/87 to 12/93 with the codes D007, D008, D009, D022, D035, D040, F001, F002, F005 Add "*D008" to all codes listed in bullet 10 on page ix	P/S code AC1, timeline updated due to typo errors found upon review. P/S code AC/AC2, timeline updated due to typo errors found upon review. P/S code CV, timeline updated due to typo errors found upon review. P/S code EDC, timeline updated to reflect changes in report. P/S code ICP, timeline updated due to typo errors found upon review. P/S code IE, timeline updated to reflect changes to IE regarding use of high purity oxides per SME. P/S code SA, timeline updated due to typo errors found upon review. P/S code WM, timeline updated due to typo errors in dates found upon review. Report updated to reflect omission of *D008.
Attach. 4 / all pages	Added *D008 and other codes to "EPA Codes", also added "*D008 due to leaded gloves" as footnote	Typo errors found during review.
Attach. 4 / p. 5 of 11	In CV row, add D039 to "EPA Codes" column	P/S code CV, table updated due to typo errors found upon review.

Attach. 4/ p. 5 of 11	In EDC row, add "D009" to "EPA Codes" column	PS code EDC, table updated to reflect changes in report.
Attach. 4 / p. 7 of 11	In IE row, replace "Unknown" in "Chemical/ Reagents" column with "High purity inputs" and delete D005, D006, D007, D009, D011 from "EPA Codes" column	Per SME, P/S code IE used high purity oxides. Report updated to reflect information.
Attach. 6, pp. 1, 2	Add new Attachment 6 and update "Contents" page to reflect addition Add following paragraph to end of Section 2.0: "When discrepancies in AK information are discovered, they are documented and resolved in accordance with *Acceptable Knowledge Documentation* (TWCP-QP-1.1-021). The resulting documentation is found in Decision/Discrepancies Resolution Documentation (Attachment 6)."	New TWCP-QP-1.1-021 requirement

Date changes submitted: 02/12/02	**Desired effective date for changes**:

INTERIM CHANGE APPROVAL

Document Preparer: S Wander		Reviewer (if applicable): Facility Rep.	
Signature: Sandy Wander	Date: 3/19/02	Signature: Wayne A. Pierson	Date: 3/20/02
Site Project QA Officer: ~~not required~~ M A Gavet		LAAO (if implementing WAP requirements): N/A	
Signature: not required	Date: 3/21/02	Signature:	Date:
☑ IC Approved ☐ Major Rev. ☐ Hold for next Rev.		Do changes affect WAP data collection, data quality, or performance criteria? ☐ Yes ☑ No If yes, date of CBFO approval: _____ (documentation attached)	
Site Project Mgr/Line Mgr: P Rogers			
Signature: Pamela Rogers	Date: 3/19/02		
USQ Screener (if applicable): Not applicable			
Signature: [illegible]	Date: 3 25 02		

NOTE: Changes can be designated on the document and attached to this form.

Effective date for this interim change: 3/21/02

INTERIM CHANGE REQUEST

☒ TWCP ☐ WRR ☐ Other **If Other, please identify:** _____	**IC Number:** 1
Person Requesting this Interim Change: June Fabryka-Martin	
DOCUMENT INFORMATION	
Document Title: Process Acceptable Knowledge Summary Report for Miscellaneous Operations at TA-55	**Document No./Revision:** TWCP-AK-2.1-004,R.2
Effective Date of Current Document: 05-17-01	**Document Preparer:** John Musgrave

CHANGE INFORMATION: Please ensure the following changes are made:

Section/Page	Change:	Reason/Justification:
Attach. 3, pp. 1 and 64 JJ	Delete U213 from timelines for P/S codes AC/AC2 and SA	To make hazardous waste code assignments shown on timeline consistent with discussion in text

Date changes submitted:	**Desired effective date for changes:**

INTERIM CHANGE APPROVAL

Document Preparer: John Musgrave		Reviewer (if applicable):	
Signature: John Musgrave	Date: 6/14/01	Signature:	Date:
Site Project QA Officer: M A Garett		LAAO (if implementing WAP requirements):	
Signature: M A Garett	Date: 6/14/01	Signature:	Date:
☒ IC Approved ☐ Major Rev. ☐ Hold for next Rev.		Do changes affect WAP data collection, data quality, or performance criteria?	
Site Project Mgr/Line Mgr: June Fabryka-Martin		☐ Yes ☒ No	
Signature: June Fabryka-Martin	Date: 6-13-01		
USQ Screener (if applicable): Not applicable		If yes, date of CBFO approval: _____ (documentation attached)	
Signature:	Date:		

NOTE: Changes can be designated on the document and attached to this form.

Effective date for this interim change: 06/18/01

TA-55 PLUTONIUM FACILITY
ACCEPTABLE KNOWLEDGE REPORT

REPORT TITLE: Process Acceptable Knowledge ~~Summary~~ job Report for Miscellaneous Operations at TA-55

REPORT NUMBER: TWCP-AK-2.1-004,R.2 (LA-UR-01-2559)

WASTE GENERATED FROM PROCESS/STATUS CODES: AC, AC1, AC2, AC3, ACL, AD, APD, AX, CK, CV, EDC, EOC, EXT, FDL, FLU, HRS, IB, ICP, IE, LI, LIBS, ME, NCD, RASS/RSS, RD, SA, SMP, SO, STF, VS, WM, X0, XES, XO, XP

EFFECTIVE DATE: 05/17/01

NEXT REVIEW DATE: 05/17/03

DOCUMENT PREPARER:

John Musgrave — 5/7/01
NAME — DATE

APPROVALS:

June Fabryka-Martin — 5/7/01
INDEPENDENT TECHNICAL REVIEWER/EDITOR — DATE

Mari R Lo — 5/12/01
SITE PROJECT MANAGER — DATE

Sandy Wander — 5/14/01
WASTE CERTIFICATION OFFICIAL — DATE

[illegible] — 5/14/01
SITE PROJECT QA OFFICER — DATE

Charles L. Fox — 5/7/01
FACILITY REPRESENTATIVE — DATE

© 2000, 2001 University of California

HISTORY OF REVISIONS

Revision No.	Date	Pages Revised	Reason for Change
0	06/30/00	—	New report (TWCP-03941)
1	12/04/00	All	Make report a controlled document and respond to CAR-00-036
2	05/17/01	All	To respond to CBFO review comments and to update to include new AK information
2/IC1	06/18/01	Att. 3, pp. 1, 4	Remove HWN U213 to make timelines consistent with text
2/IC2	03/21/02	Title page, vi, vii, ix, 1, 2, 20, 24, Table 5, 35 Att. 3, 4	Clarification and update of information.

CONTENTS

Section **Page**

ACRONYMS iv

TA-55 PROCESS/STATUS (P/S) CODE INDEX vi

PROCESS ACCEPTABLE KNOWLEDGE SUMMARY viii

1.0 INTRODUCTION 1

2.0 METHODOLOGY USED TO SEARCH FOR AK RECORDS 1

3.0 DESCRIPTION OF THE PROCESS WASTE 3
- 3.1 Facility and Mission 3
- 3.2 Basis, Rationale, and Assumptions Used to Delineate the Waste Streams 3
- 3.3 Waste Physical Form and Content Description 4
- 3.4 Waste Volume and Time Period of Waste Generation 4
- 3.5 Waste Generation Processes 5
- 3.6 Material Inputs to the Waste Generation Process 23

4.0 ASSIGNMENT OF EPA HAZARDOUS WASTE NUMBERS 27
- 4.1 F, K, and P Listings 34
- 4.2 Toxicity Listings 34

5.0 VERIFICATION THAT IGNITABLE, REACTIVE, AND CORROSIVE WASTES WERE EXCLUDED 35

6.0 VERIFICATION THAT INCOMPATIBLE CHEMICALS WERE PROHIBITED 36

7.0 VERIFICATION THAT THERE ARE NO COMPRESSED GASES, FREE LIQUIDS, NONRADIONUCLIDE PYROPHORICS, SEALED CONTAINERS GREATER THAN FOUR LITERS IN VOLUME, OR >1% RADIONUCLIDE PYROPHORICS 36

8.0 VERIFICATION THAT THERE ARE NO POLYCHLORINATED BIPHENYLS (PCBs) IN THE WASTE STREAM 37

9.0 CITED PROCEDURES AND REQUIREMENTS DOCUMENTS 37

Tables
1. Process Feed Materials for Miscellaneous Operations 24
2. Average Isotopic Content of Plutonium Material Types and Enrichments 26
3. Average Isotopic Content of Uranium Material Types and Enrichments 26
4. Chemical Inputs to Processes Described in This Report 28
5. Evaluation of the Applicability of EPA Hazardous Waste Numbers to Processes Discussed in This Report 31

Attachments
1. Acceptable Knowledge Roadmap (16 pages)
2. LANL and TA-55 Site Maps (2 pages)
3. Timeline for TA-55 Miscellaneous Processes (6 pages)
4. Process Inputs and Outputs (11 pages)
5. Simplified Process Flow Diagram (1 page)
6. Decision/Discrepancies Resolution Documentation (1 page)

ACRONYMS

AK	acceptable knowledge
AK Information Summary	*Los Alamos National Laboratory Transuranic Waste Acceptable Knowledge Information* (TWCP-PLAN-0.2.7-001)
CFR	*Code of Federal Regulations*
CLS	Chemistry and Laser Science [Division]—former name of C Division
CMPO	octylphenyldiisobutylcarbamoylmethylphosphine oxide
D	EPA hazardous waste number prefix for wastes with hazardous characteristics, defined in 40 CFR Subpart C, Sections 261.21 to 261.24
DBBP	dibutyl butylphosphonate
DHDCMP	dihexyl N,N-diethylcarbamoylmethyl phosphonate
DL	discard limit
DOE	U.S. Department of Energy
DTP	detailed technical procedure
DWLS	Discardable Waste Log Sheet
EPA	U.S. Environmental Protection Agency
F	EPA hazardous waste number prefix for hazardous wastes from non-specific sources, defined in 40 CFR Subpart D, Section 261.31
FOOF	dioxygen difluoride
GB	glovebox
HEPA	high-efficiency particulate air
HWN	hazardous waste number
K	EPA hazardous waste number prefix for hazardous wastes from specific sources, defined in 40 CFR Subpart D, Section 261.32
LANL	Los Alamos National Laboratory
M	miscellaneous [identifier for TWCP records for miscellaneous processing]
MEGAS	Multiple Energy Gamma Assay System
MISC	Miscellaneous [designator for individual documents in miscellaneous operations reports in Attachment 1, Acceptable Knowledge Roadmap]
MSE	molten salt extract
MT	material type
NDA	non-destructive assay
OSWER	Office of Solid Waste and Emergency Response (EPA)
P	EPA hazardous waste number prefix for acute hazardous waste defined in 40 CFR Subpart D, Section 261.33(e)
PF-4	Plutonium Facility, Building 4
P/S [code]	process/status [code]
QA	quality assurance
QP	quality procedure
R&D	research and development
RCRA	Resource Conservation and Recovery Act
RD&D	research, development, and demonstration

RFETS	Rocky Flats Environmental Technology Site
RLWTF	Radioactive Liquid Waste Treatment Facility
RMDC	Records Management/Document Control
SME	subject matter expert
TA	technical area
TBP	tributyl phosphate
TCLP	toxicity characteristic leaching procedure
TRU	transuranic
TWCP	Transuranic Waste Characterization Program
U	RCRA hazardous waste number prefix for toxic waste defined in 40 CFR Subpart D, Section 261.33(f)
UCNI	Unclassified Controlled Nuclear Information
VOC	volatile organic compound
WIPP	Waste Isolation Pilot Plant
WIPP WAC	*Waste Acceptance Criteria for the Waste Isolation Pilot Plant* (DOE/WIPP-069)
WIPP WAP	Attachment B, Waste Analysis Plan, to the *Hazardous Waste Facility Permit Issued to the Waste Isolation Pilot Plant* (EPA No. NM4890139088)
WODF	Waste Origination and Disposition Form
WPRF	Waste Profile Request Form

TA-55 PROCESS/STATUS (P/S) CODE INDEX

Note: This index indicates the main process AK report and report section that covers each P/S code mentioned in this report.

P/S Code	P/S Name	Process AK Report*
AC	Actinide Chemistry, R&D	Miscellaneous Operations
AC1	Actinide Chemistry, R&D	Miscellaneous Operations
AC2	Actinide Chemistry, R&D	Miscellaneous Operations
AC3	Actinide Chemistry, R&D	Miscellaneous Operations
ACL	Analytical Chemistry Laboratory	Miscellaneous Operations
AD	Actinide Processing Demonstration	Miscellaneous Operations
APD	Actinide Processing Demonstration	Miscellaneous Operations
AX	Solution Assay	Miscellaneous Operations
CF	Cement Fixation	Nitrate Operations
CK	RD&D Volatile Fluoride Pu Recovery	Miscellaneous Operations
CV	R&D Experimental Chlorination Processes	Miscellaneous Operations
CX	Chloride Anion Exchange	Chloride Operations
EDC	Electrolytic Decontamination	Miscellaneous Operations
EOC	Experimental Oxide Characterization	Miscellaneous Operations
EV	Evaporator	Nitrate Operations
EXT	Extraction RD&D	Miscellaneous Operations
FDL	FOOF Demonstration Loop	Miscellaneous Operations
FLU	Fluorination RD&D	Miscellaneous Operations
HP	Cement Fixation	Nitrate Operations
HRS	High Resolution Spectroscopy	Miscellaneous Operations
IB	Matrix Study of Pyrochemical Salts	Miscellaneous Operations
ICP	ICP–AES Analysis	Miscellaneous Operations
IE	Isotope Enrichment	Miscellaneous Operations
IS	Incinerator	Nitrate Operations
LI	XF6 Experimental Measurements	Miscellaneous Operations
LIBS	Laser-Induced Breakdown Spectroscopy System	Miscellaneous Operations
ME	Metallography	Miscellaneous Operations
NCD	Nonconfirming Drums	Miscellaneous Operations

P/S Code	P/S Name	Process AK Report*
OR	Direct Oxide Reduction	Pyrochemical Processes
PTS	RD&D Pretreatment Study	Nitrate Operations
PX	Pyrochemical R&D	Special Processing
RASS/RSS	Raman Spectroscopy System	Miscellaneous Operations
RB	Roasting and Blending	Nitrate Operations
RBJ	Roasting and Blending Jr.	Nitrate Operations
RC	Rotary Calciner	Nitrate Operations
RD	Repackaging into Retrievable Drums	Miscellaneous Operations
RR	Ion Exchange	Nitrate Operations
SA	Super Acid RD&D	Miscellaneous Operations
SMP	SP Mounting Preparation	Miscellaneous Operations
SO	Super Oxidizer, FOOF Program	Miscellaneous Operations
SS	Salt Stripping	Pyrochemical Processing
STF	Standard Fabrication	Miscellaneous Operations
VS	Confirmation, Inspection & Sampling	Miscellaneous Operations
WM	Waste Management	Miscellaneous Operations
X0	Inactive or Unspecified P/S Material	Miscellaneous Operations
XES	X-Ray Energy Spectroscopy	Miscellaneous Operations
XO	Inactive or Unspecified P/S Material	Miscellaneous Operations
XP	RD&D Experimental Processes	Miscellaneous Operations

* Process AK reports: Chloride Operations (TWCP-AK-2.1-002,R.2), Miscellaneous Operations (this report), Nitrate Operations (TWCP-AK-2.1-005,R.2), Pyrochemical Processes (TWCP-AK-2.1-006,R.2), and Special Processing (TWCP-AK-2.1-007,R.2)

PROCESS ACCEPTABLE KNOWLEDGE SUMMARY

Waste-generating process: Miscellaneous Operations

P/S codes:

AC, AC1, AC2, AC3, ACL, AD, APD, AX, CK, CV, EDC, EOC, EXT, FDL, FLU, HRS, IB, ICP, IE, LI, LIBS, ME, NCD, RASS/RSS, RD, SA, SMP, SO, STF, VS, WM, X0, XES, XO, XP

Type of waste generated:

Retrievably stored and newly generated, mixed and non-mixed, combustible and non-combustible debris; liquid wastes sent to the Radioactive Liquid Waste Treatment Facility at TA-50 or immobilized in cement (as part of nitrate operations)

Site: LANL

Facility Mission (including defense and non-defense programs):

TA-55 has extensive capabilities for the extraction and recovery of plutonium from residues and scraps generated from operations at various LANL facilities and other DOE sites in the defense complex. The recovered plutonium is converted into pure plutonium feedstock. These manufacturing and recovery operations, as well as associated maintenance operations and TA-55 plutonium research are the sources of TRU waste contaminated scrap, residues, and debris generated at TA-55. The scrap and residues are processed to recover as much plutonium as practicable before disposal. Wastes from miscellaneous operations are generated from plutonium recovery and purification for defense and non-defense programs; these wastes are generated and produced in the same rooms and gloveboxes and so were not segregated until August 27, 1998.

Area(s) or building(s) where the process waste was generated (including operations carried out in those areas):

TA-55 Plutonium Facility (Building PF-4), Rooms 105, 106, 112, 113, 115, 120, 124, 126, 208, 209, 210, 401, 409, 420, and 432

Description of the process waste (physical form and typical content description):

Primarily debris waste, including cellulosic materials, plastic, rubber, ceramic, metal and glass debris, and waste sent to nitrate operations to be immobilized in cement.

Summary Category Group: S5000

Waste Matrix Codes: S5100, S5300, S5400

Description of the waste-generating process:

The overall goal of the miscellaneous operations is to recover plutonium from metal, metal alloys, scrap, and residues and produce a purified plutonium oxide product or feedstock for

conversion to metal. Processes in miscellaneous operations include pretreatment, dissolution, purification, and hydroxide precipitation.

Process feed:

Plutonium metal or metal alloy, oxides and hydroxide cakes; pyrochemical salts; anode heels; ash; and residues from other DOE facilities

Radioisotopic content of the waste:

Variety of plutonium material types with different well-defined isotopic compositions. Americium-241, neptunium-237, and uranium-234 may be present at detectable concentrations as decay products of their plutonium precursors. Some of the processes separate plutonium and americium, or plutonium and uranium, such that the waste is usually enriched in Am-241 or U-234, but may also be depleted in some cases. Pa-231 and Cs-137 may be present in trace amounts due to their widespread presence as contaminants in TA-55 operations.

RCRA Constituents/EPA Hazardous Waste Numbers:

- No K or P codes
- F001: P/S codes WM, XO, X0 (trichloroethylene and 1,1,2-trichloro-1,2,2-trifluoroethane (freon))
- F002: P/S codes AC, AC1, AC2, AD, APD, SA, WM, X0, XO (chlorobenzene, methylene chloride, tetrachloroethylene, trichloroethylene)
- F003: AD, APD, ME, SA (acetone, diethyl ether, methanol, xylene)
- F005: P/S codes AC, AC1, AC2, SA, WM, X0, XO (benzene, methyl ethyl ketone, toluene, pyridine)
- D004 (arsenic) and D010 (selenium): P/S codes AD, FDL, FLU, RASS/RSS, SO, XES, XP
- D005 (barium) and D006 (cadmium): P/S codes AD, CK, CV, EXT, FDL, FLU, IB, LI, RASS/RSS, SO, XES, XP
- D007 (chromium) and D009 (mercury): P/S codes AC, AC1, AC2, ACL, AD, APD, AX, CK, CV, EDC, EOC, EXT, FDL, FLU, IB, ICP, LI, ME (D007 only), RASS/RSS, SA, SO, STF (D007 only), WM, X0, XES, XO, XP
- D008 (lead, excluding leaded gloves): P/S codes AD, APD, CK, CV, EXT, FDL, FLU, IB, LI, RASS/RSS, SO, WM, X0, XES, XO, XP
- *D008 (leaded gloves only): P/S codes AC, AC1, AC2, ACL, AD, APD, AX, CK, CV, EDC, EOC, EXT, FDL, FLU, HRS, IB, ICP, IE, LI, ME, RASS/RSS, RD, SA, SO, STF, VS, WM, X0, XES, XO, XP
- D010 (selenium): P/S codes AD, FDL, FLU, RASS/RSS, SO, XES, XP
- D011 (silver): P/S codes AC, AC1, AC2, AD, CK, CV, EXT, FDL, FLU, IB, LI, RASS/RSS, SO, XES, XP

- D018 (benzene): P/S codes AC, AC1, AC2, SA
- D019 (carbon tetrachloride): P/S codes AD, APD, CV, RASS/RSS
- D021 (chlorobenzene): P/S code APD
- D022 (chloroform): P/S codes AC, AC1, AC2, APD, WM, X0, XO
- D035 (methyl ethyl ketone): P/S codes WM, X0, XO
- D038 (pyridine): P/S code AC, AC1, AC2, SA
- D039 (tetrachloroethylene): P/S codes AD, APD, CV
- D040 (trichloroethylene): P/S codes ME, WM, X0, XO
- No HWN: P/S codes LIBS, NCD, SMP

Process waste volume (if known):

Waste volumes for each P/S code have not been tracked. Instead, waste items are segregated into similar material types and packaged in waste containers. Waste containers are segregated into waste streams in the AK Information Summary, and waste stream volumes are reported in that document.

Years of generation for the process waste: 1979–present

PROCESS AK REPORT FOR MISCELLANEOUS OPERATIONS AT TA-55

1.0 INTRODUCTION

All transuranic (TRU) waste must be sufficiently characterized and certified before it is shipped to the Waste Isolation Pilot Plant (WIPP). The U.S. Environmental Protection Agency (EPA) allows use of acceptable knowledge (AK) for waste characterization. EPA uses the term AK in its guidance document, *Waste Analysis at Facilities that Generate, Treat, Store and Dispose of Hazardous Waste.* Attachment B, Waste Analysis Plan, to the *Hazardous Waste Facility Permit Issued to the Waste Isolation Pilot Plant* (EPA No. NM4890139088) (WIPP WAP) defines AK and provides guidelines on how AK should be obtained and documented.

This process AK summary report was prepared in accordance with *Acceptable Knowledge Documentation* (TWCP-QP-1.1-021). The primary purpose of this report is to systematically organize, evaluate, and summarize detailed AK information about individual processes that generate TRU waste in the Plutonium Facility at Technical Area (TA) 55, one of the TRU-waste generators at Los Alamos National Laboratory (LANL). By doing so, this report provides detailed technical support for several waste stream AK summary reports that include these process wastes.

2.0 METHODOLOGY USED TO SEARCH FOR AK RECORDS

The AK search for the information related to TA-55 waste streams resulting from miscellaneous (i.e., mixed oxide, uranium, analytical, and research and development) processes covered:

- Review of the *Los Alamos National Laboratory Transuranic Waste Characterization Acceptable Knowledge Information Summary* (TWCP-PLAN-0.2.7-001) (AK Information Summary) that includes information regarding all TRU waste streams

- Review of documents related to waste generation and waste management activities at TA-55 as listed on the Acceptable Knowledge Roadmap (Attachment 1)

- Interviews with personnel involved with waste generation and waste management at TA-55 as listed on the Acceptable Knowledge Roadmap (Attachment 1)

NOTE: Much of the AK information related to miscellaneous operations is contained in Transuranic Waste Characterization/Certification Project (TWCP) Record No. TWCP-3546. Individual documents in this record have been assigned a separate identifier, M-nnn, where nnn is a sequential 3-digit number. This referencing nomenclature is used throughout this report and its attachments.

- Analyses of individual processes generating waste, and evaluations of the potential for Resource Conservation and Recovery Act (RCRA)-regulated constituents to be

present in the process wastes, based on subject matter expert (SME) interviews and any relevant data

The TWCP Records Management/Document Control (RMDC) Center contains copies of the documents referenced in this report. Any Unclassified Controlled Nuclear Information (UCNI) is contained in these records, and is not included in this report. Such records are identified as UCNI in the Acceptable Knowledge Roadmap (Attachment 1).

This process AK report is part of a set of closely related reports about TRU-waste generating activities at TA-55. For convenience in organizing AK for plutonium processing at this facility, the processes were categorized into six operational areas. The multiple processes in each area are described in detail in the following six process AK reports for plutonium:

- *Process Acceptable Knowledge Report for Chloride Operations at TA-55* (TWCP-AK-2.1-002)
- *Process Acceptable Knowledge Report for Metal Operation Processes at TA-55* (TWCP-AK-2.1-003)
- *Process Acceptable Knowledge Report for Miscellaneous Operations at TA-55* (TWCP-AK-2.1-004) (this report)
- *Process Acceptable Knowledge Report for Nitrate Operations at TA-55* (TWCP-AK-2.1-005)
- *Process Acceptable Knowledge Report for Pyrochemical Processes at TA-55* (TWCP-AK-2.1-006)
- *Process Acceptable Knowledge Report for Special Processing at TA-55* (TWCP-AK-2.1-007)

Each process AK report contains information on multiple individual processes that are assigned unique identifiers called process/status (P/S) codes. For example, miscellaneous processes include 36 individual processes that are each assigned a P/S code, as listed on the cover page of this report. The search and compilation of AK information was based on P/S code because that is the most detailed level of process information generally recorded in waste generation records. The process AK reports frequently cross-reference one another because P/S codes in one operational area often provide the material feed for P/S codes in another area. An index of P/S codes cited in this process AK report follows the list of acronyms; this index lists process descriptions and the primary process AK report in which that P/S code is discussed.

When discrepancies in AK information are discovered, they are documented and resolved in accordance with *Acceptable Knowledge Documentation* (TWCP-QP-1.1-021). The resulting documentation is found in Decision/Discrepancies Resolution Documentation (Attachment 6).

3.0 DESCRIPTION OF THE PROCESS WASTE

The following sections describe processes used in miscellaneous operations, and identify the resulting wastes as well as outputs that are sent to other operations, such as nitrate operations, for further processing.

3.1 Facility and Mission

The TA-55 Plutonium Facility (Building PF-4) recovers plutonium from scrap and residues generated throughout the U.S. Department of Energy (DOE) defense complex, and processes it into pure plutonium oxide for conversion to metal and other products. A LANL site map and a detailed map of the buildings at TA-55, including Building PF-4, are shown in Attachment 2.

Processes in miscellaneous operation were solely defense related (TWCP-614, TWCP-4162). However, wastes from various processes were not segregated by funding source, waste-generating process, or waste-generating location (e.g., room or glovebox) until recently (August 27, 1998), but rather were segregated and packaged based on waste type (TWCP-887, TWCP-4162, TWCP-4167). Consequently, a single waste container often contains wastes from multiple processes, including those for non-defense activities. Some debris waste was also co-mingled with room trash related to these same operations (both defense and non-defense), and was initially boxed as low-level waste. Subsequently, some of these waste boxes were returned for disposal in drums as TRU waste when on-site radioassay results showed them exceeding the low-level discard limits (TWCP-816).

3.2 Basis, Rationale, and Assumptions Used to Delineate the Waste Streams

The basis for delineation of TA-55 waste streams was established by the evolving set of LANL and TA-55 waste management plans and site-specific procedures, which date back to the start of operations at the Plutonium Facility in 1978 (TWCP-352, TWCP-697, TWCP-700, TWCP-701, TWCP-3943). The stated guidance and practice from the beginning, continuing to the present day, has been to handle and package all debris waste in a similar fashion, regardless of the process (i.e., P/S code) of origin. Inspection, collection, documentation and packaging operations of solid, certifiable TRU wastes at TA-55 are conducted in PF-4 by a waste management section or team (TWCP-352, TWCP-700, TWCP-701, TWCP-3943). Wastes from all TRU waste-generating activities at TA-55 are handled and packaged into waste containers by this team based on the material content of the waste, without regard to P/S code. Materials are considered waste only when they have been received and processed by the waste management team.

Assignment of a particular waste container to a waste stream is made on the basis of waste generator information compiled in the AK Information Summary. Waste generator information is reviewed to identify the types and sources of waste items

present in each drum, in order to evaluate the most appropriate waste summary group, waste matrix code, and potential for the presence of hazardous constituents. In the AK Information Summary, TA-55 wastes have been assigned to waste streams based on the waste segregation schemes used by TA-55:

- By radioisotope content (Pu-238 or Pu-239 material type)
- By material matrix (combustible, noncombustible, metal, glass, etc. waste types)
- By hazardous waste status (mixed, non-mixed, or special case waste streams)

3.3 Waste Physical Form and Content Description

Wastes generated during miscellaneous operations include primarily debris wastes and wastes entered into the cement fixation process or sent to the Radioactive Liquid Waste Treatment Facility (RLWTF) at TA-50. General debris waste categories from miscellaneous operations include

- Cellulose-based waste (for example, paper, cloth)
- Plastic-based waste (for example, gloves, tape, labware)
- Rubber
- Metal debris (for example, wire, hose clamps, tools, labware)
- Glass debris

These debris waste items are contaminated with small amounts of radioactive and chemical substances. In addition to these general debris categories, miscellaneous processes also generated waste consisting of organometallic and inorganic solids of various compositions, sand and slag, ash, and crucibles.

3.4 Waste Volume and Time Period of Waste Generation

This report covers waste streams generated from 1979, when miscellaneous processes first began at TA-55, to the present. Process wastes from miscellaneous operations have different associated EPA hazardous waste numbers (HWNs) depending on the time period during which they were generated. The P/S codes, their time period of generation, and corresponding HWNs are shown graphically in Attachment 3, Time Lines. These timelines are based on a review of procedures that guided the experimental and demonstration studies and miscellaneous research and development (R&D) operations at TA-55 and information from SMEs familiar with the operations. Many of the operations were of short duration and/or changed frequently. Initiation or continuation of a process was based on the date of approval for a given procedure. In some cases, a series of procedures or related documents for one process could be located to establish the timeline. In many other cases, discontinuities between procedure titles and numbers made it difficult to determine how long the process may have continued before it was modified or ended. For purposes of this report, the time period for the process is assumed to continue two years beyond the date of the last approved procedure

unless otherwise indicated. Some processes have continued to the present. In cases where a given procedure did not identify the associated P/S code for the operation, a P/S code assignment was applied when the process description matched or was similar to a description in a previous or later revision of the same or a related procedure. Procedures were not available for some P/S codes (see Attachment 4). For these P/S codes, interviews with SMEs were used to develop process descriptions and timelines.

Waste volumes for each P/S code have not been tracked. Instead, waste items are segregated into similar material types and packaged in waste containers. Waste containers are assigned to waste streams in the AK Information Summary, and waste stream volumes are reported in that document.

3.5 Waste Generation Processes

The following subsections describe the generation and disposal of waste by miscellaneous operations.

Manufacturing and research operations performed at TA-55 in the production of plutonium also generate plutonium-contaminated scrap and residues. These residues are processed to recover as much plutonium as is practical. TA-55 has extensive capabilities for the extraction and recovery of plutonium from residues and scraps generated from operations at various LANL facilities and other DOE sites. These recovery and manufacturing operations, as well as associated maintenance operations and TA-55 plutonium research are the sources of TRU waste generated at TA-55. Detailed background information about the TA-55 plutonium recovery processes can be found in *Waste from Plutonium Conversion and Scrap Recovery Operations* (TWCP-352). A full-block flow diagram for plutonium processing and waste management at TA-55 is given in reference TWCP-886.

Research, development, and demonstration (RD&D) projects at TA-55 comprise an array of activities involving applied techniques and methods designed to study and improve processes associated with the purification, separation, extraction, recovery, and characterization of actinides (primarily plutonium) from various matrices. The nature of many of the investigations and experimental activities was such that no one detailed procedure could describe the variety of activities carried out. In many cases a definitive list of chemicals and reagents used in the investigations was not available. The process descriptions that follow are categorized by process group and are arranged within each group in approximate chronological order. A complete listing of P/S codes for miscellaneous operations, their descriptions, feed materials, and inputs and outputs is found in Attachment 4. A simplified process flow diagram for miscellaneous operations is found in Attachment 5.

3.5.1 Extraction, Separation, and Characterization Studies (P/S Code AD)

From July 1979 until September 1994 or later, a series of similar actinide extraction, separation, and characterization R&D studies occurred in Room 208. These studies were conducted under various revisions of three series of procedures: processing of actinide hydroxide cakes from chloride and nitrate operations, development of sensors and instrumentation for online chemical analysis, and purification process development. A P/S code was not assigned to some of the earlier revisions, but is identified as P/S code AD in the latest revision of each series.

In this subsection, each revision of the hydroxide cake processing procedure is described separately because the chemical list and waste produced in the procedure differed in each revision.

- Beginning in July 1979, gloveboxes (GB) 231 and 233 in Room 208 were designated for americium R&D (M-018/TWCP-3546). These wet chemical experiments involved the use of evaporator hydroxide cake samples as the process feedstock. The process accountability flow diagram and procedures for P/S code AD do not identify the P/S codes that feed this operation; however, according to an SME (M-053/TWCP-3546) familiar with this operation, evaporator hydroxide cake samples came from P/S codes EV and HP (part of TA-55 nitrate operations). The hydroxide cake samples were dissolved in concentrated nitric acid, sampled to determine hydrogen, americium, and other principal cations, and subjected to extraction and separation phases to strip off the organics. The reagent list includes concentrated and dilute acids and caustics. Dibutyl butylphosphonate (DBBP) and kerosene were used in the extraction process.

- Presumably, americium activities occurred as indicated above until August 1983 when the procedure was revised. The modified procedure indicates that GB 231 and 233 were no longer limited to americium R&D but were assigned for use in general process R&D studies (M-019/TWCP-3546). Experimental investigations associated with the revised procedure involved chloride anion-exchange separations of plutonium, americium, thorium, neptunium, uranium, magnesium, and calcium. The process feedstock for these experiments is assumed to have been evaporator hydroxide cake samples from P/S codes EV and HP (M-053/TWCP-3546). The reagent list includes concentrated and dilute caustic and acid solutions, DBBP/Isopar (an isoparaffinic hydrocarbon solvent) and tributyl phosphate (TBP)/Isopar for solvent extraction, as well as platinum and platinum-rhodium alloys. Lead hydroxide, oxide and

nitrate are indicated as being used "less frequently." An SME familiar with this P/S code had "not come across any lead compounds" during his tenure beginning June 1989 (M-034/TWCP-3546). However, because the SME's tenure began after the presumed end date of this activity, no definitive determination can be made about the presence or absence of lead in the process waste stream. The SME further stated that mercury was present in the 1984/85 time frame. Other chemical reagents listed in this procedure consist of acids, bases, and other extraction solvents that are not RCRA-listed constituents with associated HWNs.

- It is assumed that operations of a similar nature continued in Room 208, GB 231 and GB 233 until December 1986. At this time, in addition to GB 231 and GB 233, a third glovebox (GB 289) was assigned for general chemical and electrochemical research with actinide solutions (M-020/TWCP-3546). Experimental investigations conducted under the revised procedure appear to be similar to the two previously described procedures. The chemical list is similar except that lead-containing compounds are no longer indicated. (However, see the discussion below about lead as a possible constituent in the feedstock material.) Additional materials used in these studies included gallium and tantalum metals, oxides, or salts as solids or in solution; tetraethylamine hydrochloride, tetraethylamine hydroxide, hydrazine dihydrochloride, and perchloric acid.

- It is presumed that various chemical and electrochemical experimental research with actinide solutions continued in the same room and gloveboxes as indicated above until February 1989, at which time the procedure was revised again. The additional investigations described in the revised procedure involved studies of plutonium (III), plutonium (IV), and plutonium (VI) complexed by nitrate and fluoride (M-021/TWCP-3546). The chemical list is similar to the previously described operations with the exception of dihexyl N, N-diethylcarbamoylmethyl phosphonate (DHDCMP) and octylphenyl-diisobutylcarbamoylmethylphosphine oxide (CMPO) used in extraction experiments. None of the chemical inputs to the process are RCRA-regulated constituents with associated HWNs.

In February 1989, various research studies involving sensors and instrumentation suitable for online chemical analysis took place in Room 208, GB 261 and GB 262 (M-022/TWCP-3546). The list of frequently used chemicals includes concentrated and dilute acids and bases, actinide salts or oxides, and reducing agents.

Purification process development investigations occurred in Room 208, GB 230, GB 238, and GB 274 from May 1988 through September 1994. Processes carried out were of a non-routine developmental nature involving research, process development, small scale "trouble-shooting," and occasionally preparation of various isotopes and isotopic mixtures of plutonium, uranium, americium, and neptunium (M-006/TWCP-3546). Frequently used chemicals included concentrated and dilute acids and bases, analytical standards, and reducing and oxidizing agents. Tetrachloroethylene and diisopropyl benzene are listed as solvent diluents, and methanol and ethanol are listed as "infrequently used chemicals." Waste streams containing or contaminated with tetrachloroethylene would result in the assignment of the EPA HWN F002 for spent halogenated solvents. Carbon tetrachloride is indicated as being used as a solvent diluent from July 1991 to March 1992. Because carbon tetrachloride was not used as a degreaser, the EPA HWN F001 for carbon tetrachloride does not apply; however, the EPA HWN D019 for carbon tetrachloride would be applied unless analytical data indicate that the concentration of the hazardous constituent does not exceed the applicable regulatory threshold limit. The procedure did not clarify how methanol was used in the process; however, an SME (M-034/ TWCP-3546) familiar with the process stated that methanol and ethanol slushes were used in cooling baths outside the glovebox. Methanol used outside the glovebox would not become part of the TRU waste stream and the EPA HWN would not apply. However, methanol and/or ethanol may also have been used for cleaning inside the glovebox (M-034/ TWCP-3546).

Wastes that may be generated under P/S code AD include typical laboratory debris such as labware (e.g., glass, plastic, rubber, or metal materials and supplies), rags from general cleanup, spent solutions, and typical glovebox operations waste, including drybox gloves, windows, gaskets, and high-efficiency particulate air (HEPA) filters. Other wastes include the strip solutions and raffinate, spent organics, and unused hydroxide cake samples. The procedure indicates strip solutions and spent organics were stored but does not address ultimate disposal of these spent solutions. The process accountability flow diagram for P/S code AD indicates outputs from this operation may be sent to the vault, returned to the originating P/S code, or directed to aqueous recovery or cement fixation based on the discard limit (DL). Materials may also be sent for chemical analysis or transferred to P/S code APD for further experimental development. Assuming that evaporator hydroxide cakes comprised the primary feed material for this code, the hazardous constituents associated with the feedstock material may be concentrated in the actinide-containing matrices and solutions that are discarded as waste. Based on information presented in TWCP-AK-2.1-002,R.2 (chloride operations) and TWCP-AK-2.1-005,R.2 (nitrate operations),

hydroxide cakes may contain the heavy metals cadmium (D006), chromium (D007), lead (D008), mercury (D009), and silver (D011).

3.5.2 Halogenation Studies (P/S Codes CK, CV, FDL, FLU, IE, LI, SO)

A variety of halogenation (chlorination and fluorination) studies were conducted in various rooms and gloveboxes in Building PF-4, Rooms 105, 106, 113 and 208, from March 1988 to October 1992. Brief descriptions of these related operations are provided below. Standard debris waste items that were generated from these operations included rags from general clean-up, miscellaneous tools, labware (glass, plastic, or metal), typical glovebox operations waste; additional types of wastes are listed with each process description.

R&D efforts utilizing fluorinating agents to fluorinate ash samples containing plutonium residues were conducted in Room 105, GB-177, beginning in March 1988 under P/S code SO. A gas flow loop was used to pass a fluorinating agent through a gas-solid reactor where plutonium in the solid residue reacted chemically to form solid PuF_4 or gaseous PuF_6 (M-007, M-008/TWCP-3546). Gaseous PuF_6 was trapped in a cold trap, distilled, and reduced to PuF_4. This process was similar to that used in P/S codes FLU and CK (described later in this section) insofar as they all involved related functions (i.e., extraction of plutonium from various matrices), but each process used a slightly different approach (M-035/ TWCP-3546). Chemicals used in this process included fluorine and various halogen fluorides, aluminum oxide, and sodium bicarbonate. The feed material was ash generated in the incinerator (P/S code IS) and had passed through the rotary calciner (P/S code RC) (M-053/ TWCP-3546). Raw ash from the incinerator contains the heavy metals barium (D005), cadmium (D006), chromium (D007), lead (D008), and silver (D011) in concentrations exceeding the Toxicity Characteristic Leaching Procedure (TCLP) limits. Calcined ash also contains these metals (except silver) above the TCLP limits. The process accountability flow diagram for P/S code SO indicated that process outputs (i.e., unreacted ash and solid PuF_4) were sent to the vault. Some fluorinated items may have been sent to CLS-1 for analysis. In addition to the standard debris waste items, process waste also included spent aluminum oxide and sodium bicarbonate.

Fluorination of plutonium-containing residues was also carried out in Room 106, GB-185, beginning in October 1990 (M-009/TWCP-3546). Fluorination operations at this location may have occurred prior to 1990 because the procedure reviewed was a revised document and the process was not indicated as being new. The process end date was approximately October 1992 (M-035/TWCP-3546). This process appears to be identical to the fluorination operation (P/S code FDL) described below; however,

the procedure indicates that methanol is used in the cold trap outside the glovebox. In addition to the standard debris waste items, process waste also included spent aluminum oxide and sodium bicarbonate. The process accountability flow diagram for P/S code FDL indicated that process outputs (i.e., solid residues and PuF_4 product) were sent to the vault.

P/S code FDL was conducted in Room 105, GB-192, from August 1991 through March 1995, when it was dismantled. This process was part of the dioxygen difluoride (FOOF) program and consisted of a gas flow loop to conduct experiments that demonstrated the feasibility of fluorination at room temperature (M-011, M-036/TWCP-3546). The procedure does not identify the precise nature of the plutonium-bearing matrices. P/S code FDL used FOOF as an oxidizing agent and methane as a reduction agent. Carbon tetrafluoride was a reaction byproduct. Aluminum oxide and sodium bicarbonate were used as "getter" beds for excess fluorine. Liquid nitrogen was used in a cooling bath outside the glovebox and was not contaminated by materials inside the glovebox. Cooling was also accomplished by circulating refrigerant mixtures of freons. Upon dismantling the gas loop, the freon was captured. P/S code FDL did not involve the use of any chlorinated compounds. In addition to the standard debris waste items, process waste also included spent aluminum oxide and sodium bicarbonate. The process accountability flow diagram for P/S code FDL indicated that process outputs (i.e., solid residues and PuF_4 product) were sent to the vault.

P/S code CK was a fluorination operation carried out in Room 105, GB-193, beginning in May 1991 (M-010, M-035/TWCP-3546). The procedure does not identify the precise nature of the plutonium-bearing matrices. If ash was a process input (as in P/S codes SO and FDL), the same heavy metals may be important for subsequent processes that use feedstock from P/S code CK. The organic chemicals 1-propanol and trichloroethylene were used in cold traps and cooling baths in the standard TA-55 configuration located outside the glovebox (M-035/TWCP-3546). The process accountability flow diagram for P/S code CK indicated that outputs from this operation were sent to the countroom or vault or transferred to P/S code PTS (RD&D Pretreatment Studies, covered in TWCP-AK-2.1-005,R.1, nitrate operations).

P/S code IE (the Phoenix Project) ran from about 1984/85 until 1990 (M-035/TWCP-3546). It involved the use of PuF_6 and refluorinating agents. No RCRA constituents of concern were involved in the operation.

P/S code LI was a fairly pure operation in Rooms 105, 106, and 113 that converted small quantities of PuO_2 to PuF_6 (M-035/TWCP-3546). The

converted material was given to whomever needed it for further R&D. The timeline is likely similar to that for P/S code IE. No RCRA constituents of concern were involved in the operation.

Separation operations involving experimental chlorination processes similar to the previously described fluorination procedures were initiated in Room 106, GB-165, in March 1991 under P/S code CV (M-026/ TWCP-3546). A gas loop was used to flow carbon tetrachloride and perchlorocarbons (M-035/TWCP-3546) through a gas-solid reactor to chlorinate plutonium oxides to form recoverable plutonium compounds. Once produced, the plutonium compounds and/or plutonium-bearing matrices were subjected to further treatment to achieve complete plutonium recovery. Process chemicals included dilute acids and bases and chlorinated hydrocarbons. Carbon tetrachloride and tetrachloroethylene were used in the cold traps, which were of the standard TA-55 configuration located outside the glovebox (M-035/ TWCP-3546); therefore, the coolant chemicals would not have been part of the TRU waste stream. Process outputs from this operation may have been sent to the vault via the countroom, returned to the originating P/S code, or transferred to aqueous recovery or cement fixation (based on the discard limit). Sub-accountable samples may have been sent to chemical analysis.

Plutonium chlorination operations were used to recover or purify plutonium compounds and/or plutonium-bearing matrices in Room 208, GB-223, beginning in October 1992. During November 1994 the operation shifted to Room 106, GB-160 (M-027/TWCP-3546). The P/S code for this operation is identified as CV. This operation involves the use of various reagents, which are passed through a gas-solid reaction loop to produce recoverable plutonium compounds. Chemical reagents include dilute acids and bases, carbon tetrachloride, reducing agents, and ammonium chloride. In addition to the standard debris waste, process waste included trace carbon tetrachloride from reagent bottles. Carbon tetrachloride was used as a chlorinating compound in the reaction loop and would have been completely reacted in the chlorination process (M-035/TWCP-3546). Because carbon tetrachloride was not used as a solvent or degreaser, the EPA HWNs F001 and F002 for carbon tetrachloride are not applicable. Process outputs from this operation may have been sent to the vault via the countroom, returned to the originating P/S code, or transferred to aqueous recovery or cement fixation (based on the DL). Sub-accountable samples may have been sent to chemical analysis.

A small-scale research operation involving gas-solid and solid-solid fluorination and chlorination chemistry began in March 1992 in Room 113, GB-117 and GB 179, under P/S code FLU (M-012/TWCP-

3546). The process, materials, and chemicals used in this operation were similar to those used in P/S codes SO and CK because they all involved related functions (i.e., extraction of plutonium from various matrices) although each process used a slightly different approach (M-035/ TWCP-3546). The process feedstock (ash) was generated in P/S code IS and also passed through the rotary calciner (P/S code RC) (M-053/ TWCP-3546). Raw ash from the incinerator contains the heavy metals barium (D005), cadmium (D006), chromium (D007), lead (D008), and silver (D011) in concentrations exceeding the TCLP limits. Calcined ash also contains these metals (except silver) above the TCLP limits. The process accountability flow diagram indicates that process outputs are sent to the vault or the originating P/S code. Some items were sent to CLS-1 for analysis. No organic chemicals are listed in the procedure. In addition to standard debris waste, other process wastes included used vacuum pump oil, and heating mantles. Hazardous constituents are not expected to be present in these waste items.

3.5.3 Non-Aqueous Dissolution/Extraction Operations (P/S Codes AC, AC1, AC2, AC3, AX, SA)

Several non-aqueous dissolution/extraction operations occurred in Building PF-4 beginning in 1989 and continuing at least until 1994. These operations are described below.

In January 1989, research operations in Room 208, GB 203, involved the dissolution of actinide compounds and actinide-containing matrices in superacid media. (M-004/TWCP-3546). The superacid solutions were evaporated to leave solid products that were analyzed by a variety of methods. Chemical use included anhydrous hydrofluoric acid, antimony pentafluoride, HSO_3F, hydrofluoric acid, and "other superacid solvents" (which are not specified in the procedure). The P/S code for this operation is not identified in the procedure but the process description is consistent with P/S code SA (M-024, M-037/TWCP-3546). This P/S code covered two separate activities that did not overlap in time. P/S code SA began in 1989 with superacid work, but the process changed approximately in 1991 to organometallic studies. According to the SME, organic compounds (i.e., solvents) were never used with superacid media. Aluminum oxide and magnesium oxide were used to absorb superacid components. These spent oxides were discarded along with contaminated glass. Hazardous constituents are not expected to be present in any of the waste streams from the superacid work.

The study of the organometallic chemistry of uranium and thorium in non-aqueous solvents (as part of P/S code SA) was conducted in Room 208, GB-216 and GB 230, in 1989 (M-024/TWCP-3546). Chemical reagents and solvents are not specified but the procedure

indicates that materials used in the process may include "hydrocarbon, ethereal, and aromatic solvents, organic reagents, and inorganic salts." The procedure was revised in 1991, at which time the operation was conducted in Room 105 (GB 166 and GB 177) and Room 208 (GB 230 and GB 240). The process consisted of a variety of small-scale organoactinide operations involving fundamental research of the synthesis in non-aqueous media of new actinide compounds, their characterization and reaction chemistry, and application to existing actinide processing technology. Due to the range of experimental studies conducted under this P/S code, a definitive list of chemical reagents does not exist; however, previous studies involved the use of a wide range of hydrocarbon solvents, including the D-listed and F-listed constituents: methylene chloride (F002), diethyl ether (F003), benzene (D018, F005), toluene (F005), and pyridine (D038, F005). Tetrahydrofuran and toluene were also used in the organometallic process. Neptunium and plutonium metal were put into tetrahydrofuran and dried. Bromine and/or iodine were added to create plutonium iodide, the starting material for other studies. In addition to standard debris wastes, process wastes may have included reaction by-products and residues, various pieces of laboratory equipment, spent organic solvents, and filtration media. Process outputs from this operation may be sent to the vault, returned to the originating P/S code, or transferred to aqueous recovery or cement fixation (based on the discard limit).

The procedure associated with the previous operation was revised once again in March 1994. The P/S codes for these operations are indicated as AC, AC1, AC2 and AC3. SMEs (M-038/TWCP-3546) familiar with these activities indicated that the process began as P/S code AC in February 1989 and transformed to P/S code AC2 in February 1994. P/S codes AC2 probably ran concurrently with AC1. This revised procedure indicates that operations occurred in the same rooms and gloveboxes identified in the previous revision. The distinguishing features between AC1 and AC2 were that AC1 was an analytical process using aqueous compounds, predominantly dilute nitric, hydrochloric, and perchloric acid solutions. These acidic solutions would have been neutralized and precipitated to recover the plutonium. Solutions were sent to cementation. The solids were rinsed from rags with water before the rags were discarded. Any perchloric salts would be in the neutralized acidic solutions or in the rinse solutions, which were both sent to cementation. P/S code AC2 involved synthesis of (air-sensitive) new compounds in an inert glovebox. This was a non-aqueous process. P/S code AC3 is not related to P/S codes AC1 or AC2, but is predominantly a metal operation (M-038/TWCP-3545). This code had not yet become active by the time this report was prepared, and no other information was available for it.

The procedure describes operations that comprise a broad range of laboratory activities in support of fundamental and applied actinide chemistry research (M-025/TWCP-3546). These activities include, but are not limited to, preparation of solvents and reagents, synthesis of new chemical compounds, and characterization and analysis of new chemical compounds using wet chemistry methods and analytical instrumentation. The chemical list indicates the use of a variety of materials, including organic solvents (e.g., pyridine, toluene and benzene), alkaline earth metals, and transition metals. The SMEs (M-038/TWCP-3546) familiar with these activities indicated that a "variety of aromatic, alkaline, and chlorinated solvents" (e.g., tetrahydrofuran, toluene, benzene, methylene chloride, and chloroform) were used in these activities. Hexane and acetonitrile began to be used in P/S code AC2 recently. Acetonitrile and tetrahydrofuran are Appendix VIII VOCs, but their EPA HWNs (U003 and U213 respectively) do not apply in this case. Organic chemicals with applicable EPA HWNs are benzene (D018, F005), chloroform (D022), methylene chloride (F002), tetrahydrofuran, and toluene (F005). The SME stated that waste byproducts from the operations that contain these constituents were not discarded but were held in the glovebox for reprocessing or recovery. Because the SME was not involved with these activities after 1994, he was unable to definitively state how the waste materials were ultimately dispositioned. In a later discussion, other SMEs (M-038/TWCP-3546) indicated that use of the chlorinated solvents associated with P/S code AC1 was discontinued in 1994 and that items contaminated with these constituents mentioned are still in the glovebox and have yet to be discarded as of the date of this report. Transition metals used as reagents in the synthesis of new materials in this process included sodium salts, potassium salts, and silver salts. The precipitated salt byproducts also were not discarded but were held in the glovebox for reprocessing and recovery. In a later discussion, other SMEs confirmed that silver salts associated with P/S code AC1 are still in the glovebox awaiting determination for a path forward for disposition. Other than silver (D011), no RCRA metals were used in the processes (M-038/TWCP-3546). In addition to the standard debris wastes, process wastes may have included reaction by-products and residues, heating mantles, vacuum pump apparatus, various pieces of laboratory equipment, spent organic solvents, and filtration media. Process outputs for both P/S codes may be sent to the vault, returned to the originating P/S code, or transferred to aqueous recovery or cement fixation (based on the discard limit).

P/S code AX was related to the dissolution of actinide compounds in superacid media but involved the assay of plutonium in nitric or hydrochloric acid solutions. This operation occurred in Rooms 401, 409, and 420. The procedure was initiated in 1988 and revised in 1989 (M-005/TWCP-3546). Assay solutions were accumulated for transfer to

P/S code CX (in chloride operations) or P/S code RR (in nitrate operations). The use of RCRA solvents is not indicated in the procedure.

3.5.4 Analytical Operations (P/S Codes ACL, ICP, XP)

P/S code ACL is an umbrella operation that covers all analytical techniques performed in Room 124 (M-042/TWCP-3546). This P/S code began in the 1980s and continues to the present. Processes under this P/S code involve analysis of plutonium and americium, RCRA metals, and trace metals. Originators provide samples, which are prepared for further analyses (e.g., ICP and XES). Analytical preparation may involve the use of nitric acid solutions. Unused liquid samples are returned to the originator, sent to radiochemistry for counting, or sent to recovery operations if established discard limits are exceeded. Discardable wastes (based on discard limits) are disposed to the acid waste line. Some solid wastes (i.e., residues from chromatography) are collected, counted, and sent to recovery operations if the plutonium concentration exceeds the discard limit.

P/S code ICP is one of the plutonium analytical techniques associated with P/S code ACL (M-042/TWCP-3546). This process takes place in Room 106, GB 188 and began in 1987/88. Although still active, this P/S code will eventually be replaced by P/S code ACL.

P/S code XP involved several small-scale R&D efforts primarily focused on plutonium recovery (M-049/TWCP-3546). Operations were conducted in Room 208, GB-227, 228, and 229. This P/S code began in March 1986 and ended in May 1990. It included the following activities:

- Fluoride sintering of PuO_2 took advantage of the presence of fluoride to aid the formation of a sintered mass of PuO_2 powder at temperatures above 700°C. Process inputs did not involve constituents that would result in the generation of RCRA hazardous waste (M-049/TWCP-3546).

- Chlorination of plutonium oxides involved oxides with tantalum chips from Rocky Flats Environmental Technology Site (RFETS). Chlorination was used to recover plutonium from potassium chloride and sodium chloride matrices. Process inputs did not involve constituents that would result in the generation of RCRA hazardous waste (M-049/TWCP-3546).

- Processing of molten salt extract (MSE) salts generated at LANL and RFETS did not involve constituents that would result in the generation of RCRA hazardous waste (M-049/TWCP-3546).

- Recovery of plutonium from ash involving plutonium/thorium oxide mixtures generated ash residues that are likely to contain a variety of contaminants, including RCRA heavy metals such as cadmium, chromium, and lead (M-049/TWCP-3546). The ash was sent to recovery and ultimately cemented. The feed material was ash generated in the incinerator (P/S code IS) and that had passed through the rotary calciner (P/S code RC) (M-053/TWCP-3546). Raw ash from the incinerator contains the heavy metals barium (D005), cadmium (D006), chromium (D007), lead (D008), and silver (D011) in concentrations exceeding the TCLP limits. Calcined ash also contains these metals (except silver) above the TCLP limits.

- Processing of neptunium oxide and metal was performed to remove the protactinium daughter in order to use the neptunium for non-destructive assay (NDA) standards (M-049/TWCP-3546).

Waste from P/S code XP included standard debris items associated with laboratory operations and glovebox maintenance, as well as lead shielding. Phosphine oxide was used as the extracting/complexing agent and diisopropyl benzene, CMPO, and DHDCMP mixtures were used as diluents for processes involving solvent extraction of plutonium leached from a candidate matrix.

3.5.5 Measurement/Detection Operations and Studies (P/S Codes EOC, HRS, LIBS, RASS/RSS, SMP, VS, XES)

P/S code VS took place in Room 209, GB-210, and involved the inspection of high-purity oxides and metals to verify the inventory in the vault (M-045/TWCP-3546). Materials were retrieved from the vault, brought to the glovebox, inspected, assayed by a non-destructive method, sampled if necessary for chemical analysis (under different P/S codes), then repackaged if necessary, and returned to the vault. Waste from this activity would include vials if the inspected material were sampled, and plastic (from the bagout process). No other materials or chemicals were introduced. This P/S code ran only a few months, from August 1987 to early 1988.

P/S code XES is a plutonium assay technique in which samples containing plutonium are excited with X-rays, and the resulting emission spectra are measured to determine plutonium concentrations (M-042/TWCP-3546). Sample preparation may occasionally require the use of acid/base solutions to suspend solids. Unused sample material is returned to the originator. The time period for P/S code XES is 1988 to present. The process occurs in Room 106.

P/S code RASS/RSS involves interrogating small samples (solids or solutions containing less than 1 gram of nuclear material from other P/S

codes) using laser-based spectroscopy (M-043/TWCP-3546). This P/S code was created February 1993 and is still active although the process has not been used in two to three years. The operation takes place in Room 105, GB-165. Sample preparation is not conducted under this P/S code. If samples require preparation prior to spectroscopy (e.g., if the sample must be diluted with an acid solution because plutonium concentrations are too high), the preparation steps are performed by the originating P/S code. Once analyzed, samples are returned to the originating P/S code, sent on to other P/S codes, or sent for recovery/reprocessing. No waste is generated from this P/S code except standard glovebox trash, including gloves that may be leaded or unleaded.

P/S code LIBS used a laser for isotopic analyses of samples of high purity metals and oxides (M-047/TWCP-3546). The process was initiated January 1998 and is still operational. Some developmental work commenced prior to 1998; however, this was before the process went "hot." Process activities are conducted in Room 105, GB 158 and 180. Waste forms include standard glovebox maintenance items. There is no sample preparation involved, and no organic or RCRA metal constituents are introduced or generated during the process.

P/S code SMP has "never gone hot" (M-044/TWCP-3546) but may start up at the end of 2001. The process will take place in Room 120 and will involve mounting samples of plutonium metal and stainless steel using a low-melting bismuth-tin alloy in preparation for electron microscopy. No organic solvents or RCRA metals will be introduced or generated as wastes during the process. No other sample preparation will be done under this P/S code. Any required surface preparation will be done at the originating P/S code, and samples will be returned to the originating P/S code. Waste will consist of standard glovebox maintenance items.

P/S code EOC began in March 1992 in Room 208 as an experiment designed to calculate the surface area and pore size distribution of a sample and to analyze its surface characteristics (M-015/TWCP-3546). Mixtures of helium and nitrogen are passed through a U-shaped cell containing a sample to be analyzed. With the exception of nitrogen and helium, no solvents or chemical are used in this process (M-040/ TWCP-3546). Process outputs from this operation may be sent to the vault, returned to the originating P/S code, or transferred to aqueous recovery or cement fixation (based on the discard limit).

P/S code HRS involved spectroscopic studies in Room 105, GB-189 and 190, from January 1987 through March 1995 (M-036/TWCP-3546). Fluorinated actinide compounds were introduced with compressed gases into a long-path, variable temperature cell for spectroscopic

measurement and in preparation for physical chemistry (M-023, M-036/TWCP-3546). RCRA-regulated constituents were not indicated as being used. Process outputs, which were the experimental items used for analysis, are expected to have been the same as the process inputs; therefore, no RCRA or other waste constituents of concern were involved.

3.5.6 Pyrochemical Matrix Studies (P/S Codes IB, EXT, STF)

A pyrochemical matrix study was conducted from May 1986 through February 1995 in Room 208, GB-264. The process was initiated under P/S code IB (Incoming Oxide Blending) in May 1986 (M-039/TWCP-3546). From 1986-1992, the process involved rod milling prior to screening (M-030/TWCP-3546). This process had two objectives: (1) blending large batches of homogeneous plutonium metal oxides (up to 85 percent purity) for pyrochemical operations, and (2) dissolution of 78 percent pure (or greater) plutonium metal oxides for nitrate operations (M-039/TWCP-3546). The materials or impurities in oxides destined for dissolution consisted of high iron, chromium, and halide salts; therefore, this accounted for the sources of chromium in the evaporator bottoms.

The process changed in August 1992 to become the Matrix Study of Pyrochemical Salts when a need developed to blend oxides to provide feed material for P/S codes RB and RBJ to make NDA standards. This activity continued until February 1995 when the process became P/S code STF, which is still an active code conducted in Room 126, GB-138 and 139. The objective of this activity was to determine the effect of pyrochemical salt matrices on the accuracy of NDA measurements (M-029/TWCP-3546). Process activities involved crushing, pulverizing, blending, roasting, and sieving pyrochemical salts. The results were used to determine handling and processing of the salts and for correction of bias measurements. The feed material consisted of high-purity oxides to use in the fabrication of standards to be used at LANL and throughout the DOE complex (M-039/TWCP-3546). Waste forms included a stainless steel capsule used to contain the standard, and stainless steel cans (similar in size to a paint can) used to contain the oxides. The process did not use or generate wastes containing liquids, solvents, organics or metals (except the stainless steel). Waste included typical glovebox maintenance items (e.g., cheesecloth, rags, HEPA filters, glovebox windows, gloves). Process outputs from this operation were sent to the vault.

P/S code EXT was a small basic research operation that began in March 1992 in Room 106, GB-180. This research effort explored aqueous extraction of plutonium from various waste streams, particularly used

pyrochemical salts (M-013/TWCP-3546), using acids and bases. The procedure does not indicate the use of any RCRA-listed chemicals. Wastes from this operation would include rags and paper products from general clean-up; labware that may include glass, plastic, or metal; heating mantles, and spent pyrochemical salts. The process accountability flow diagram and procedures for this process do not identify the P/S codes that fed this operation. Spent pyrochemical salts contain barium (D005), cadmium (D006), chromium (D007), lead (D008), and silver (D011) at concentrations that depend upon the process that generated the salt. Concentrations of RCRA heavy metals are below regulatory limits for pyrochemical salts from direct oxide reduction (P/S code OR) (TWCP-2540), but concentrations are not known for pyrochemical salts from salt stripping (P/S code SS) or special processes (P/S code PX). Residues from the solution extraction process were sent to the vault via the countroom, returned to the originating P/S code, or transferred to chloride (P/S code CX) or nitrate (P/S code CF) operations. The EPA HWN D constituents would carry through to subsequent treatment processes. Solutions were transferred to chloride (P/S code CX) or nitrate (P/S code CF) operations, or were disposed to the acid waste line if the solutions met the waste acceptance criteria for the RLWTF at TA-50.

3.5.7 Hydrothermal Processing (P/S Code APD)

P/S code APD was a hydrothermal processing procedure initiated in March 1996 in Room 208, GB-230 (M-001/TWCP-3546). The operation involves the reaction of aqueous/organic mixtures, pure organic liquids, or contaminated combustible solids (e.g., ion exchange resins, plastic filters, and cellulose rags) under supercritical conditions (i.e., high temperature and pressure). Feed streams include, but are not limited to, analytical laboratory solutions that may contain carbon tetrachloride, tributyl phosphate, and organic solvents (unspecified in the procedure), as well as lead and mercury (Cl-25/TWCP-3547). Process effluents are gases, liquids and salts. Organic components are oxidized to carbon dioxide. Nitrate contaminants are converted to nitrogen gas and some nitrous oxide. Components such as chlorine, sulfur, and phosphorus are oxidized and converted to acids or salts. Gases are liberated; solids and liquids are collected for recovery or disposal.

The types of chemical wastes generated by hydrothermal processing experiments are predominantly effluents and rags. Hazardous organic constituents, including carbon tetrachloride, are probably destroyed by the hydrothermal process (M-034/TWCP-3546); therefore, organic RCRA-listed constituents in the feed streams would not be expected to be present in the resulting debris waste. Rags contaminated with carbon tetrachloride that were not processed through the hydrothermal reactor

would be assigned the EPA HWN D019. Hazardous inorganic constituents (i.e., RCRA metals) would not be present in the waste (M-034/TWCP-3546) other than any heavy metals present in the feed solutions (e.g., EPA HWNs D008 and D009). Process outputs from this operation may be sent to the vault, returned to the originating P/S code, or transferred to aqueous recovery or cement fixation (based on the discard limit). Materials may also be sent to Actinide Chemistry R&D (P/S codes AC1 or AC2) or Raman Spectroscopy (P/S code RASS/RSS) for quantification.

3.5.8 Electrochemistry Experiments (P/S Code EDC)

Under P/S code EDC, various electrochemistry R&D experiments were conducted in Rooms 105, 106, 112, 208, 209, and 210 in December 1995. Electrochemistry methodologies were designed to decontaminate items, replace processes that produce large amounts of waste, or enhance chemical reactions (M-014 and M-031/TWCP-3546). Electrolytes were typically inert nonhazardous salts. Process inputs were from the vault or metallurgy operations. The process involved uranium decontamination of disassembled weapon components from various sites with various levels of surface contamination with plutonium (M-041/TWCP-3546). The operation was strictly an aqueous process in which an alkaline solution was reacted with the components to precipitate uranium. A stainless steel cathode was used; therefore, corrosion was not an issue and the electrolyte was not degraded. Significant amounts of metal could be stripped in a short period of time. The precipitated solution comprised either uranyl hydroxide or uranyl sulfate, which was then dried for mass balance. The distillate contained small amounts of uranium. Rinse water was discarded to the industrial caustic waste line. RCRA metals would be present in the waste stream but the SME stated that there are "reams of analytical data" to support that RCRA metals are below regulatory threshold limits. However, to be conservative, it is assumed that chromium (D007) could be present in the stainless steel removed during this process (M-031/TWCP-3546). Outputs from the process are directed to the vault or nitrate recovery operations (P/S code CF).

3.5.9 Metallography (P/S Code ME)

P/S code ME takes place in Room 115 and involves a standard metallography process that was initiated at TA-55 in 1979 and continues to the present (M-048/TWCP-3546). The purpose of the metallography operation is to characterize the microstructure of metallic or ceramic pieces to verify and establish the quality and effectiveness of welds. Materials examined under this P/S code consist of plutonium and uranium carbides, nitrides, and oxides, as well as zirconium and tantalum alloys, and stainless steel. Metal pieces (pellets) are cut with a

diamond saw. Ceramic pieces are subjected to grinding with standard metal grinding media (e.g., papers impregnated with silicon carbides and diamond). The materials are polished with several different chemical compounds. Prior to May 1992, a mixture of 1–10 percent trichloroethylene and kerosene were used. Ethanol and acetone may also have been used. After May 1992, these materials were replaced with a mineral oil and a derivative from orange peels. The polishing compounds were not used for their solvent properties, but rather for their cooling and lubricating properties. Little liquid waste is generated from the process. The trichloroethylene/kerosene mixture and the alcohols largely evaporated during the polishing process. Waste trichloroethylene and kerosene was accumulated, absorbed onto vermiculite, and discarded in 55-gallon drum.

Metal or ceramic pieces are cleaned with alcohol and etched with various kinds of acid or caustic etchants, which are reused as much as possible. Waste etchants are neutralized; however, their disposal path is uncertain. Analytical data for some of the etchant residues indicated that these residues did not contain excessive concentrations of RCRA constituents; consequently, waste from this process is documented on Chemical Waste Disposal Records as "non-RCRA."

Beryllium and chromium (from the stainless steel) would be present in the grindings. However, the beryllium is not in a form that is RCRA regulated. Other waste includes standard glovebox maintenance items (e.g., rags, glovebox gloves, and HEPA filters), and a large volume of grinding paper. Although generally the gloves were not leaded, leaded gloves are used at the grinding station and for the last 3-4 years only at one glovebox.

3.5.10 Waste Management Operations (P/S Codes NCD, RD, WM, X0, XO)

P/S code RD was used only in 1984–1986 in Room 432 (M-046/TWCP-3546). This P/S code allowed for tracking of demonstration drums (one drum each year) that were packaged and prepared in accordance with the TA-55 Attachments to the *Certification Plan* (TWCP-701) to meet the WIPP requirements at that time. Packaging of these drums did not of itself result in the generation of TRU waste. The SME stated that the waste drums that were packaged contained non-mixed TRU waste.

Operations under P/S code NCD occurred during the period from April 1989 – April 1991 in Room 432 (M-046/TWCP-3546). This P/S code was established to provide a mechanism for dealing with TRU drums that did not confirm specifications (e.g., recorded weight or nuclear material content). Non-confirming drums were temporarily set aside under this P/S code until such time as personnel could reprocess them under P/S code WM to correct the nonconfirming condition. After April

1991, nonconfirming drums were dealt with immediately, and P/S code NCD was no longer needed.

According to an SME (M-046 and M-050/TWCP-3546) who researched the assignment of waste to P/S codes WM, XO, and X0, P/S code WM is currently limited to waste that arises from the TRU solid waste management operation in Room 432. This situation has been the case since the beginning of 1993. Room trash boxes from Building PF-4 have always been handled as low-level waste; however, the boxes were assayed to verify contamination levels and any that were determined to be TRU waste were diverted to Room 432 for repackaging. From May 1987 through 1992, these boxes were created as P/S code XO or X0. These codes were changed to P/S code WM after 1992. Additional controls were placed on room trash after 1992. Trash was assayed with the Multiple Energy Gamma Assay System (MEGAS). When a container was rejected on the basis of MEGAS data, the rejected container was returned to the originator for removal of any "hot" item(s). This process also allowed for greater control to prevent discarding regulated materials (e.g., RCRA constituents) in room trash. Hence, no EPA HWNs apply to waste from P/S code WM after 1993.

The designations for P/S codes XO and X0 are based on the following distinctions:

- P/S code X0 was designated for waste materials that could not be associated with a specific room, such as a hallway, mezzanine offices, rest rooms and change rooms, basement, pump rooms, and trolleys. The waste from all these areas, except the pump rooms and trolleys, would be low-level waste and no RCRA constituents would be associated with the waste items.

- P/S code XO indicated waste materials that were generated within specific rooms but could not be associated with an individual P/S code in that room. The room trash boxes assigned this P/S code, when determined by assay to qualify as TRU waste instead of low-level waste, could contain rags that had contacted ignitable constituents (e.g., ethanol, isopropyl alcohol, and hexane); however, because the waste items were not packaged as free liquids, the EPA HWN D001 for ignitability would not be applicable. Other constituents that may have been present on rags in debris waste from P/S code XO included the degreasing solvents methyl ethyl ketone (D035, F005), trichloroethylene (D040, F001, F002), and 1,1,2-trichloro-1,2,2-trifluoroethane [freon] (F001); methylene chloride (F002) used as a paint stripper until after 1999; and chloroform (D022) used in a cryogenic bath. XO switched to non-RCRA

regulated paint strippers after 1999: Citrapeel until 2001, and Organicstrip at the present time.

However, because of the difficulty in distinguishing X0 from XO on the waste containers and in waste generator records, all EPA HWNs applicable to TRU waste from XO should also be applied to TRU waste under X0 in order to be conservative.

Two other specific situations could also result in the generation of additional waste items under P/S code WM.

- During maintenance of the in-line glove box, changeout of the leaded gloves and windows would be covered under P/S code WM. No solvents or other chemicals were introduced during this routine maintenance activity.

- A spill in Room 432 in 1989 involved the release of a Pu-239-contaminated solution (consisting primarily of water with a minor amount of nitric acid) from a ventilation line. The spill was wiped up with rags and discarded under P/S code WM. Rags with excessive amounts of nitric acid would have been neutralized by dipping them in a calcium hydroxide solution inside a glovebox. No EPA HWN would be applicable to waste from this incident.

3.6 Material Inputs to the Waste Generation Process

Attachment 4 lists P/S codes for miscellaneous operations at TA-55, including process descriptions, feed material, other process inputs, process outputs, and type of waste. The feed materials for miscellaneous operations consist of the general types of materials listed in Table 1 that are obtained from the storage vault, as process output from other P/S codes, or from sources outside TA-55, including other DOE sites.

The remainder of this section summarizes the nature of the process waste in terms of its physical, chemical and radioisotopic characteristics.

3.6.1 Physical Waste Form Identification

Solid waste from miscellaneous operations primarily consists of debris waste, as well as cemented waste discarded under P/S codes CF or HP. Debris waste contains glassware, plastics, ceramic materials, paper, rags, HEPA filters, metal containers, brushes, and small tools. Leaded gloves are also generated as process waste. Prior to 1987, leaded gloves were discarded in the combustible and non-combustible debris waste streams.

Table 1. Process Feed Materials for Miscellaneous Operations

Feed Material	RCRA-Regulated Substances and Associated Hazardous Waste Number	P/S Codes in Miscellaneous Operations
Analytical laboratory solutions	Solutions from other TA-55 operations: no RCRA constituents Solutions from CLS-1: Potentially contaminated with RCRA-regulated heavy metals, mercury (D009) and lead (D008), as well as RCRA-listed organic substances used as solvents, including acetone (F003), butyl alcohol (F003), carbon tetrachloride (D019), chlorobenzene (F002, D021), chloroform (D022), methanol (F003), methylene chloride (F002), tetrachloroethylene (F002, D039), xylene (F003) (reference Cl-25 in TWCP-3547).	ACL and ICP (TA-55 solutions) APD (CLS-1 solutions)
Ash from P/S codes IS, SB, and TDC, or from other DOE sites	Usually suspect contaminated with barium (D005), cadmium (D006), chromium (D007), and lead (D008). Silver (D011), arsenic (D004), mercury (D009), and selenium (D010) may also be present; although volatile at high temperatures if present in the oxide form, these heavy metals may be alloyed to Pu if present in the metal form.	SO, XP
Disassembled weapons components	High-purity Pu and U material types	EDC
Experimental R&D feed materials; various isotopes and isotopic mixtures of actinides in various matrices	Variable purity	AD, CV, EXT, HRS, ME, RASS/RSS, SA, XES, XP
Hydroxide cakes	Typically contaminated with RCRA-regulated heavy metals cadmium (D006), chromium (D007), mercury (D009), lead (D008), and silver (D011)	AD
MSE salts	Typically fairly pure, suspect contaminated with barium but no other RCRA substances present	XP
Pu chlorides and fluorides (from various P/S codes)	Variable purity	FDL, SO
Pu metal or metal alloy	High purity, no RCRA-regulated substances, unless noted otherwise	AC, AC1, AC2, EXT, LIBS, SA, SMP, VS
Pu oxides	High-purity oxides used for P/S codes EOC, IE, LIBS, STF, and VS. Variable purity for other codes, may be contaminated with RCRA-regulated heavy metals barium (D005), cadmium (D006), chromium (D007), and lead (D008), and silver (D011)	CK, CV, EOC, EXT, FDL, FLU, IB, IE, LI, LIBS, SO, STF, VS, XP
Pyrochemical salts	Typically fairly pure, no RCRA-regulated substances other than barium (D005) present	EXT, IB

Between 1987 and May 1992, leaded gloves were segregated from combustible debris and discarded in the metal debris waste stream because of concern that explosive lead oxides might form if the combustible debris waste was incinerated. Since May 1992, leaded gloves have been routinely segregated from other metal debris waste and assigned to a separate leaded-glove waste stream.

Because items from several different processes are usually combined into individual waste drums, the physical waste form of each drum must be determined independently. This information is documented on a Waste Origination and Disposition Form (WODF) by the waste generator according to controlled procedures. The P/S code for each waste item is also documented on this form. In the packaging process, a standard form, the Discardable Waste Log Sheet (DWLS), was used to list each item ID number and record its matrix material. This form was signed by the waste packager, then reviewed and approved by quality assurance (QA) personnel.

3.6.2 Radionuclide Content Identification

The primary plutonium MT inputs for miscellaneous operations at TA-55 are listed in Table 2, and uranium material types are listed in Table 3. The designation *material type* (MT) (e.g., MT 52) is used within the DOE Complex to describe the isotopic composition of common blends of radioactive materials used within the Complex. The MT notation was developed because it is a convenient way to describe MTs that have very consistent isotopic compositions. Tables 2 and 3 indicate the isotopic composition of the MTs at the time the waste was characterized.

The plutonium MT provides the basis for estimating an upper bound for U-234, U-235, and Am-241 contents based on the rate of decay of their precursors, Pu-238, Pu-239 and Pu-241, respectively. These bounding calculations provide a basis for identifying enrichment or depletion of one radionuclide versus another based on radioassays of individual waste containers. The results of these calculations are also tabulated in Table 2, assuming (a) none of these isotopes were initially present in the material, (b) the oldest plutonium material in inventory dates back to 1 January 1960, and (c) the waste was packaged on 1 January 1996, making it 36 years old at that time (TWCP-698).

The material type used in the process generating each waste item was documented on the WODF and DWLS. However, some of the plutonium recovery processes separate plutonium and americium, or plutonium and uranium, so that their relative ratios may be altered in the process outputs and wastes. Waste items may be either depleted or enriched in Am-231 or U-234 depending on whether the source of

Table 2. Average Isotopic Content of Plutonium Material Types and Enrichments

Material Type (MT)	Plutonium Isotope (Weight %) and Half-Life						Upper Bounds for Dimensionless Weight Ratios[a]		
	Pu-238 (87.74 yr)	Pu-239 (24120 yr)	Pu-240 (6564 yr)	Pu-241 (14.35 yr)	Pu-242 (376,300 yr)	Pu-244 (8.26 x 10^7 yr)	U-234/ Total Pu	U-235/ Total Pu	Am-241/ Total Pu
MT 51	0.006	96.77	3.13	0.076	0.018	—	1×10^{-5}	0.001	0.0006
MT 52	0.01	93.78	6	0.2	0.02	—	2×10^{-5}	0.001	0.002
MT 53	0.03	91.08	8.45	0.366	0.071	—	7×10^{-5}	0.0009	0.003
MT 54	0.046	87.42	11.5	0.81	0.22	—	0.0001	0.0009	0.007
MT 55	0.06	83.88	14.73	1.03	0.304	—	0.0002	0.0009	0.009
MT 56	0.061	81.9	16.51	1.18	0.355	—	0.0002	0.0009	0.01
MT 57	0.433	74.63	20.7	2.55	1.69	—	0.001	0.0008	0.02
MT 42									
84%	1.02	1.37	10.32	3.13	84.14	0.02	0.003	1×10^{-5}	0.03
90%	0.72	1.26	6.4	1.86	89.77	—	0.002	1×10^{-5}	0.02
95%	0.45	0.56	2.47	0.906	95.58	0.029	0.001	6×10^{-6}	0.008
MT 83									
83%	83.89	13.8	1.9	0.32	0.09	—	0.26	0.0002	0.003
89%	89.26	10.07	0.633	0.021	0.015	—	0.28	0.0001	0.0002

a These ratios are calculated under the assumption that no chemical fractionation occurs and, hence, are intended to be used to identify fractionation when it is present by comparing these upper bounds to radioassay data.

Source: TWCP-698

Table 3. Average Isotopic Content of Uranium Material Types and Enrichments (Weight %)

Material Type	U-234	U-235	U-236	U-238
MT 12	0.0015	0.23	0.008	99.77
MT 35	0.36	37.6	0.14	61.9
MT 36	0.63	62.44	0.18	36.75
MT 38	1.03	93.04	0.41	5.53
MT 39	1.32	97.52	0.17	0.99

Source: TWCP-698

contamination is the process product or the process residues (TWCP-882). Americium or neptunium isotopes could also be the dominant radionuclides in some waste items due to their occasional use as primary feed materials in P/S codes such as AD, CV, EXT, HRS, RASS, SA, XES and XP.

Residues submitted for reprocessing often contain Np-237, the decay product of Am-241 (half-life, 458 yr). This radioisotope is expected to be present in minor amounts in nearly all debris waste from miscellaneous operations at TA-55.

In general, uranium and its isotopes are expected to be present only at trace levels, if at all, unless the feed material is uranium (such as disassembled weapons components, including uranium, in P/S code EDC). For plutonium feed materials, U-235 in growth from the decay of Pu-239 (half-life, 24,120 years) would be negligible due to the long half-life of Pu-239. U-234 would be present in MT 83 as a decay product of Pu-238 (half-life, 87.74 years). After 20 years, 14.6 percent of the initial Pu-238 would have decayed to U-234. For MT 83 with an initial content of 83.89 percent Pu-238, the atomic ratio U-234 to total plutonium would be about 0.14. Pa-231 and Cs-137 may be present in trace amounts due to their widespread presence as contaminants in TA-55 operations (TWCP-5164, TWCP-5165).

During TWCP characterization, the contents of each waste package undergo non-destructive analysis to provide detailed radioisotopic data. These data are used to evaluate the accuracy of AK information in accordance with *Waste Characterization Data Reconciliation with Acceptable Knowledge* (TWCP-DTP-1.2-064). This AK report is updated to incorporate the results of these comparisons.

3.6.3 Chemical Content Identification

Chemical inputs to miscellaneous operation processes are listed in Table 4. In Section 4.0, these inputs are evaluated along with constituents present in the feed materials and equipment in order to determine to applicability of EPA HWNs to process waste for each P/S code.

4.0 ASSIGNMENT OF EPA HAZARDOUS WASTE NUMBERS

The assignment of EPA HWNs to process wastes from miscellaneous operations is summarized in the text below, as well as in Table 5, as well as on the process timelines in Attachment 3, and in the table of process inputs and outputs in Attachment 4. These assignments take into account the possible presence of RCRA chemicals in process waste as a result of their suspected or known presence in feed materials, chemical inputs, equipment, and glovebox surfaces.

Table 4. Chemical Inputs to Processes Described in This Report

Chemical input	P/S Codes in which RCRA-Listed Chemicals Are Used	Comments on Applicability of EPA HWN
Gases and Cryogens		
Carbon dioxide (gas) Fluorine (gas) Halogen fluorides Krypton fluoride Methane (gas) Nitrogen dioxide (gas) Nitrogen, liquid		D001 and D002 do not apply to these gases because there are no free liquids in this waste. Also the gas cylinders are outside the building, and the gases are plumbed into the glovebox.
Acids		
Hydrochloric acid Hydrofluoric acid Nitric acid Oxalic acid Perchloric acid Sulfuric acid Superacids (e.g., HSO_3F)	 AD SA	D002 does not apply to the solid debris waste because there are no free liquids in this waste. D001 (oxidizer) does not apply to the use of nitric or perchloric acid or to the superacids for the same reason.
Bases		
Calcium hydroxide Potassium hydroxide Sodium hydroxide		D002 does not apply to the solid debris waste because there are no free liquids in this waste.
Inorganic Chemicals		
Aluminum bifluoride Aluminum chloride Aluminum fluoride Aluminum nitrate Aluminum oxide Ammonium chloride Antimony pentafluoride Bromine FOOF Hydrogen peroxide Hydroxylamine hydrochloride Hydroxylamine nitrate Iodine Iron oxide Lead and lead hydroxide, oxide, or nitrate Magnesium oxide Na, K, Li, Mg, Ca, Fe, nitrates, chlorides, carbonates, bicarbonates, oxalate, nitrites Phosphates Potassium choride Potassium dichromate	 AD, APD AD	 D008 D007

Chemical input	P/S Codes in which RCRA-Listed Chemicals Are Used	Comments on Applicability of EPA HWN
Potassium permanganate		
Potassium salt (not specified)		
Silver salt	AC1	D011
Sodium bicarbonate		
Sodium carbonate		
Sodium chloride		
Sodium chlorite		
Sodium nitrate		
Sodium salt (not specified)		
Sodium sulfate		
Thorium oxide		
Metals		
Alkaline earth metals		
Bismuth-tin alloy		
Gallium metal, oxide or salt		
Lanthanide metals		
Platinum and platinum-rhodium alloys		
Stainless steel		D007 (chromium)
Tantalum metal, oxide or salt		
Zirconium and tantalum alloys		
Organic Chemicals		
1-propanol		
Acetone	ME	F003
Acetonitrile	AC2	Appendix VIII compound. EPA HWN U003 does not apply due to the manner in which this chemical is used in TA-55 processes.
Alkylating agents (unspecified)		
Benzene	AC/AC1/AC2, SA	D018 and F005: solvent use
Carbon tetrachloride	AD, CV	D019 applies to AD and CV. F001 does not apply because this chemical was not used for degreasing.
Carbon tetrafluoride		
Chloroform	AC/AC1/AC2, APD, XO	D022
Citrapeel		
DBBP (dibutyl butyl-phosphonate)		
DBBP (dibutyl butyl-phosphonate) / Isopar (isoparaffinic hydrocarbon solvent)		
Diethyl ether	SA	F003
Dihexyl N,N-diethylcarbamoylmethyl phosphonate (DHDCMP)		
Diisopropyl benzene		
Ethanol		
Hexane		
Hydrazine dihydrochloride		
Hydrazine hydrochloride		
Isopropanol		
Kerosene		

Chemical input	P/S Codes in which RCRA-Listed Chemicals Are Used	Comments on Applicability of EPA HWN
Methanol	AD, SO	F003 applies to AD because methanol may have been used for cleaning inside the glovebox. F003 does not apply to SO because methanol was used in a cold trap outside the glovebox.
Methylene chloride (also called dichloromethane)	AC1, SA	F002 applies to P/S codes AC1 and SA because methylene chloride was used for solvent properties.
n-dodecane		
Octylphenyldiisobutyl-carbamoylmethylphosphine oxide (CMPO)		
Organicstrip		
Perchlorocarbons		
Phosphine oxide		
Phosphines		
Pyridine	AC, AC2, SA	D038, F005: used as solvent in organometallic synthesis process.
Sodium dithionate		
Tetrachloroethylene	AD, APD, CV	D039 and F002 apply to AD and APD. However no codes apply to CV because this chemical was only used as a coolant outside the glovebox.
Tetraethylamine hydrochloride		
Tetraethylamine hydroxide		
Tetraethylammonium hydroxide		
Tetrahydrofuran	AC, AC2, SA	U213 is not applicable to the use of this chemical because there is no evidence of a spill or of spill residues entering TA-55 TRU waste streams.
Thionyl chloride		
Toluene	AC, AC2, SA	F005 applies because toluene was used as a solvent in organometallic synthesis
Tributyl phosphate (TBP)		
Tributyl phosphate (TBP)/Isopar		
Trichloroethylene	CK, ME, XO	D040 applies to P/S codes ME and XO; F002 also applies to P/S code XO. Neither EPA HWN applies to P/S code CK because this chemical was used as a coolant outside the glovebox.
Vacuum pump oil		

Table 5. Evaluation of the Applicability of EPA Hazardous Waste Numbers to Processes Discussed in This Report

P/S Code	Description	Potential EPA Hazardous Waste Numbers (HWNs)			Applicable HWNs
		Due to Feed (from Table 1 and text)	Due to Chemical Use (from Table 4)	Due to Process***	
AC	Actinide Chemistry, R&D	None	D011, D018, D022, F002, F005	D007, D008, D009	D007, *D008, D009, D011, D018, D022, D038, F002, F005
AC1	Actinide Chemistry, R&D	None	D011, D018, D022, F002, F005	D007, D008, D009	D007, *D008, D009, D011, D018, D022, D038, F002, F005
AC2	Actinide Chemistry, R&D	None	D011, D018, D022, F002, F005	D007, D008, D009	D007, *D008, D009, D011, D018, D022, D038, F002, F005
AC3	Actinide Chemistry, R&D	None	None	None	None
ACL	Analytical Chemistry Laboratory	None	None	D007, D008, D009	D007, *D008, D009
AD	Actinide Processing Demonstration	D004, D005, D006, D007, D008, D009, D010, D011, D019	D008, D019, D039, F002, F003	D007, D008, D009	D004, D005, D006, D007, D008, D009, D010, D011, D019, D039, *D008, F002, F003
APD	Actinide Processing Demonstration	D008, D009, D019, D021, D022, D039, F002, F003	None	D007, D008, D009	D007, D008, D009, D019, D021, D022, D039, *D008, F002, F003
AX	Solution Assay	None	None	D007, D008, D009	D007, *D008, D009
CK	RD&D Volatile Fluoride Pu Recovery	D005, D006, D007, D008, D011	None	D007, D008, D009	D005, D006, D007, D008, *D008, D009, D011
CV	R&D Experimental Chlorination Processes	D005, D006, D007, D008, D011	D019, D039	D007, D008, D009	D005, D006, D007, D008 *D008, D009, D011, D019, D039
EDC	Electrolytic Decontamination	D007	None	D007, D008	D007,*D008
EOC	Experimental Oxide Characterization	None	None	D007, D008, D009	D007, *D008, D009
EXT	Extraction RD&D	D005, D006, D007, D008, D011	None	D007, D008, D009	D005, D006, D007, D008, *D008, D009, D011
FDL	FOOF Demonstration Loop	D004, D005, D006, D007, D008, D011	None	D007, D008, D009	D004, D005, D006, D007, D008, *D008, D009, D010, D011
FLU	Fluorination RD&D	D005, D006, D007, D004, D008, D011	None	D007, D008, D009	D004, D005, D006, D007, D008, *D008, D009, D010, D011

P/S Code	Description	Potential EPA Hazardous Waste Numbers (HWNs)			Applicable HWNs
		Due to Feed (from Table 1 and text)	Due to Chemical Use (from Table 4)	Due to Process***	
HRS	High Resolution Spectroscopy	None	None	D008	*D008
IB	Matrix Study Of Pyrochemical Salts	D005, D006, D007, D008, D011	None	D007, D008, D009	D005, D006, D007, D008, *D008, D009, D011
ICP	ICP–AES Analysis	None	None	D007, D008, D009	D007, *D008, D009
IE	Isotope Enrichment	None	None	None	*D008
LI	XF6 Experimental Measurements	D005, D006, D007, D008, D011	None	D007, D008, D009	D005, D006, D007, D008, *D008, D009, D011
LIBS	Laser-Induced Breakdown Spectroscopy System	None	None	None	None
ME	Metallography	None	D040, F003	D007, D008	D007, *D008, D040, F003
NCD	Nonconfirming Drums	None	None	None	None
RASS/ RSS	Raman Spectroscopy System	D004, D005, D006, D007, D008, D009, D010, D011, D019	None	D007, D008, D009	D004, D005, D006, D007, D008, *D008, D009, D010, D011, D019
RD	Repackaging into Retrievable Drums	None	None	D008	*D008
SA	Super Acid RD&D	None	D018, D038, F002, F003, F005	D007, D008, D009	D007, D008, *D008, D009, D018, D038, F002, F003, F005
SMP	SP Mounting Preparation	None	None	None	None
SO	Super Oxidizer, FOOF Program	D004, D005, D006, D007, D008, D009, D010, D011	None	D007, D008, D009	D004, D005, D006, D007, D008, *D008, D009, D010, D011
STF	Standard Fabrication	None	None	D007, D008	D007, *D008
VS	Confirmation, Inspection & Sampling	None	None	D008	*D008
WM	Waste Management	Must be determined on case-by-case basis			**D007, D008, *D008, D009, D022, D035, D040, F001, F002, F005
X0	Inactive or Unspecified P/S Material	Must be determined on case-by-case basis			**D007, D008, *D008, D009, D022, D035, D040, F001, F002, F005
XES	X-Ray Energy Spectroscopy	D004, D005, D006, D007, D008, D009, D010, D011	None	D007, D008, D009	D004, D005, D006, D007, D008, *D008, D009, D010, D011

P/S Code	Description	Potential EPA Hazardous Waste Numbers (HWNs)			Applicable HWNs
		Due to Feed (from Table 1 and text)	Due to Chemical Use (from Table 4)	Due to Process***	
XO	Inactive or Unspecified P/S Material	Must be determined on case-by-case basis. However, HWNs known to be applicable include those for chloroform (D022), trichloroethylene (D040, F001, F002), 1,1,2-trichloro-1,2,2-trifluorethane (F001, F002), methylene chloride (F002, use ended after 1999), and methyl ethyl ketone (D035, F005) because cleaning rags may be contaminated with these RCRA chemicals; also D007, D008, D009			**D007, D008, *D008, D009, D022, D035, D040, F001, F002, F005
XP	RD&D Experimental Processes	D004, D005, D006, D007, D008, D009, D010, D011	None	D007, D008 (gloves and shielding), D009	D004, D005, D006, D007, *D008, D008, D009, D010, D011

*** EPA HWNs assigned due to the process itself include chromium (D007) when there is the potential for this metal to be leached from stainless steel equipment or items in the process, lead (D008) when leaded gloves are used in the process, and mercury (D009) when there is a potential for a glass mercury thermometer to have been used in the same glovebox.

** P/S codes WM, X0, and XO have conservatively been assigned the same cumulative list of EPA HWNs, regardless of information indicating that specific hazardous constituents are not expected in one or more of these P/S codes, because application of these P/S codes to specific waste containers has been inconsistent at TA-55 (M-050/TWCP-3546).

* D008 due to leaded gloves

4.1 F, K, and P Listings

The following F listings only apply to cellulosic, ceramic, plastic and rubber items. The F listings do not apply to glass or metal debris, even if these items were in contact with the F-listed chemicals, because their non-porous surfaces do not absorb liquids or gases.

AC/AC1/AC2	F002 (methylene chloride), F005 (benzene, toluene)
AD	F002 (tetrachloroethylene), F003 (methanol)
APD	F002 (chlorobenzene, methylene chloride, tetrachloroethylene); F003 (acetone, methanol, xylene)
ME	F003 (acetone)
SA	F002 (methylene chloride), F003 (diethyl ether); F005 (benzene, toluene, pyridine)
WM, XO, X0	F001 (trichloroethylene, 1,1,2-trichloro-1,2,2-trifluoroethane (freon)); F002 (methylene chloride, trichloroethylene); F005 (methyl ethyl ketone)

No K or P listings apply to solid wastes generated from any of the miscellaneous operations because no K-listed or P-listed chemicals were present in the feed materials, chemicals, or equipment used in these processes.

4.2 Toxicity Listings

EPA HWNs D001 (ignitable), D002 (corrosive), and D003 (reactive) do not apply to solid wastes from miscellaneous operations because no ignitable chemicals were used in these processes and because the solid wastes do not contain any free liquids (see Section 5.0). In addition, EPA HWN D001 does not apply due to flammable organic solvent use because solutions containing these solvents are sent to aqueous recovery. For aqueous recovery, steps include dissolution of any solid plutonium in 8-16 molar nitric acid and purification by ion exchange. After recovery of plutonium from ion exchange, the solutions are below the DL and are sent to the evaporator for volume reduction. Evaporator bottoms are fixed in cement, and ignitability is not a concern in this waste form.

The list below is summarized from Table 5 and lists the EPA HWNs applicable to waste from processes described in this report. P/S codes marked with an asterisk (*) in the list do not contain RCRA-listed constituents in the feed material or in the chemicals used in the process, but have been assigned EPA HWNs due to the potential for chromium (D007) to be leached from stainless steel equipment or items in the process, lead (D008) due to the use of leaded gloves in the process, and mercury (D009) if there is a potential for a glass mercury thermometer to

have been used in the same glovebox. Prior to 1987, leaded gloves were not segregated from combustible debris. Between 1987 and May 1992, leaded gloves were segregated and discarded in the metal debris waste stream. Since May 1992, leaded gloves have been routinely segregated and assigned to a leaded-glove waste stream, still under the originating P/S code (TWCP-4166).

Activities under P/S codes LIBS, NCD, and SMP do not generate solid waste to which any HWN would be applicable.

5.0 VERIFICATION THAT IGNITABLE, REACTIVE, AND CORROSIVE WASTES WERE EXCLUDED

According to the WIPP WAP, "The prohibition of liquids and containerized gases prevents the shipment of corrosive, ignitable, or reactive wastes." Administrative controls on waste packaging were in place at various times to ensure the absence of such items from the waste stream.

- Liquids were prohibited from solid waste streams at TA-55 when the facility opened in January 1978. A waste management procedure written to cover operations at the new facility, *TA-55 Standard Operating Procedure (SOP) 406-GEN-R00*, stated that "Liquids are not permitted in any container of solid waste materials" (TWCP-3943).

- Chemical Waste Disposal Requests introduced in June 1980 included checkboxes which the waste generator was required to check if the waste contained corrosive acids or bases, or pyrophoric, flammable, corrosive, explosive, toxic, carcinogenic or highly reactive materials.

- The Certification Plan (TWCP-697) and related Generator Attachments (TWCP-701) were implemented in 1987. Waste generators were required to sign a statement on the WODF documenting that the waste contained "no free liquids, pyrophorics, explosives, compressed gases, powders or materials other than the indicated matrix." Checkboxes were also present for indicating the presence or absence of corrosive chemicals. Full implementation of this generator statement occurred in May 1987.

- Waste management inspectors perform visual examination of the waste prior to its initial packaging, thus allowing the inspectors to verify the generator's WODF statement (TWCP-701, Sections 3.8.5 to 3.8.6).

- In addition to the above-mentioned prohibitions on explosives in wastes, explosives were prohibited from TA-55 until installation of the Impact Test Facility in the early 1990s. Explosives continue to be banned in the solid waste streams up to the present time. If a misfire should occur, the requirement is to destroy the unspent powder by burning (TWCP-4720).

- The Waste Profile Request Form (WPRF), in use since 1991, includes a statement that must be authenticated by the waste generator, that the waste is not ignitable (flash point >200°F), reactive, or corrosive.

- The TA-55 Generator Attachments to the Certification Plan were updated in 1995 (TWCP-700) re-emphasizing the prohibition on liquids in the waste, and the continuation of waste management inspection, remained in effect.

Hence, since the inception of operations at TA-55, corrosive and reactive wastes have been excluded from TA-55 solid wastes through the prohibition of liquids.

The absence of these prohibited items is verified through radiography of each waste container and visual examination of selected containers during TWCP characterization activities. These data are used to assess the accuracy of AK information in accordance with *Reconciliation of Visual Examination and Radiography Information* (TWCP-QP-1.1-028). Any free liquids are remediated, or the container is tagged as non-compliant by filing a Prohibited Waste Report in accordance with *Nonconformance Reporting and Tracking* (TWCP-QP-1.1-007).

6.0 VERIFICATION THAT INCOMPATIBLE CHEMICALS WERE PROHIBITED

Section 5.0 summarizes administrative controls in place at TA-55 that prohibit incompatible chemicals in the waste, and measures taken to verify their absence. In addition, all waste containers shipped from TA-55 to TA-54 for storage were evaluated for potentially incompatible chemicals in accordance with 49 *Code of Federal Regulations* (CFR) Subpart C—Segregation and separation chart of hazardous materials; Section 177.848, Segregation of hazardous materials, and were determined to be in compliance with this requirement.

7.0 VERIFICATION THAT THERE ARE NO COMPRESSED GASES, FREE LIQUIDS, NONRADIONUCLIDE PYROPHORICS, SEALED CONTAINERS GREATER THAN FOUR LITERS IN VOLUME, OR >1% RADIONUCLIDE PYROPHORICS

Most gases used at the TA-55 Plutonium Facility are stored outside the building and the gas is plumbed into the glovebox from outside the building (TWCP-4164). Occasionally, a lecture bottle may have been used for a process inside the building, but these bottles were kept outside of the glovebox with the gas plumbed into the glovebox. Consequently, compressed gas cylinders or containers are not expected to be in any of the TRU wastes generated by TA-55 operations.

Spray cans, especially WD-40, were in common use in TA-55 gloveboxes until May 1992 (TWCP-4166). These were routinely discarded as metal debris waste. From 1988 until May 1992, the protocol was to vent or puncture the spray cans inside the glovebox; venting was indicated by inserting a metal wire into the valve. After May 1992, spray cans were no longer used in gloveboxes.

For items of pyrochemical salt waste, the procedures of oxygen sparging and/or carbonate oxidation have been used since May 1987 to ensure that pyrophorics were oxidized. In addition, screening tests on similar pyrochemical salts and residues (which contain higher amounts of plutonium) at the Rocky Flats Environmental Technology Site (TWCP-2501) have shown (1) no autoignition, (2) no spontaneous combustion, and (3) no sparking. Experimental results on the reactivity of LANL Direct Oxide Reduction (DOR) salt with water and the reactivity in air of heated calcium metal nodules from DOR salts indicate the absence of "dangerous when wet materials" and pyrophoricity in these salts (TWCP-3730, TWCP-3731, TWCP-3732).

Verification that individual waste drums do not contain compressed gases, free liquids, or sealed containers greater than 4 L in volume is obtained from radiography of each waste containers and visual examination of selected containers during TWCP characterization activities. Any free liquids are remediated, and any sealed containers greater than 4 L in volume, or unpunctured or unvented gas containers, are removed; or else the waste container is tagged as non-compliant by filing a Prohibited Waste Report in accordance with *Nonconformance Reporting and Tracking* (TWCP-QP-1.1-007). For administrative controls on the prohibition of pyrophorics, see Sections 5.0 and 6.0.

8.0 VERIFICATION THAT THERE ARE NO POLYCHLORINATED BIPHENYLS (PCBs) IN THE WASTE STREAM

No PCBs were introduced into the miscellaneous operations, based on documentation in TA-55 procedures reviewed during the AK investigation and summarized in the process inputs listed in Table 1, Table 4, and Attachment 4. Oils used in the reviewed processes include vacuum pump oils, and cutting fluids used for cooling purposes; none of these oils are known to contain PCBs. All transformers known to contain PCBs have been tracked from the time of startup of TA-55 in 1978. Whenever any transformer oil is drained, it is handled by a subcontractor who is wholly responsible for its disposal (TWCP-AK-2.1-005,R.2, Section 8.0); this oil does not enter the LANL disposal operations.

9.0 CITED PROCEDURES AND REQUIREMENTS DOCUMENTS

- 40 CFR Part 261, Subpart C—Characteristics of hazardous waste, Sections 261.21 (*Characteristic of ignitability*), 261.22 (*Characteristic of corrosivity*), 261.23 (*Characteristic of reactivity*), and 261.24 (*Toxicity characteristic*)

- 40 CFR Part 261, Subpart D—Lists of hazardous waste, Sections 261.31 *(Hazardous wastes from non-specific sources),* 261.32 *(Hazardous wastes from specific sources),* and 261.33 *(Discarded commercial chemical products, off-specification species, container residues, and spill residues thereof)*

- 49 CFR Subpart C—Segregation and separation chart of hazardous materials. Section 177.848, *Segregation of hazardous materials*

- *Acceptable Knowledge Documentation* (TWCP-QP-1.1-021)
- *Document Control* (TWCP-QP-1.1-004)
- *Nonconformance Reporting and Tracking* (TWCP-QP-1.1-007)
- *Reconciliation of Visual Examination and Radiography Information* (TWCP-QP-1.1-028)
- *Waste Acceptance Criteria for the Waste Isolation Pilot Plant* (DOE/WIPP-069)
- *Waste Analysis at Facilities that Generate, Treat, Store and Dispose of Hazardous Waste* (EPA/OSWER 9938.4-03)
- Waste Analysis Plan, Attachment B to the *Hazardous Waste Facility Permit Issued to the Waste Isolation Pilot Plant* (EPA No. NM4890139088)
- *Waste Characterization Data Reconciliation with Acceptable Knowledge* (TWCP-DTP-1.2-064)

ACCEPTABLE KNOWLEDGE ROADMAP

Waste from P/S Codes: AC, AC1, AC2, AC3, ACL, AD, APD, AX, CK, CV, EDC, EOC, EXT, FDL, FLU, HRS, IB, ICP, IE, LI, LIBS, ME, NCD, RASS/RSS, RD, SA, SMP, SO, STF, VS, WM, XES, XP, XO, X0

Copies of these documents are in the TWCP RMDC Center.

TWCP Record No.	Information Category Code*	Information	Source	Summary	Limitations
TWCP-352	B	Description of plutonium recovery processes	*Wastes from Plutonium Conversion and Scrap Recovery Operations,* LA-11069-MS, March 1988.	Document describes the Pu residues and the various treatment approaches used in recovering plutonium from scrap	Document does not give information about RCRA constituents introduced or present in the processes
TWCP-614	D	All TA-55 waste is Defense related.	Memo from Doug Sankey.	All TA-55 waste is Defense related.	Budget information may not be acceptable.
TWCP-697	C	Waste was controlled to meet WIPP WAC requirements as early as 1983.	*Los Alamos TRU Waste Certification Plan for Newly Generated TRU Waste,* WCP-HSE7-CPL-01, R.2 (November 1984)	Waste was controlled to meet WIPP WAC requirements as early as 1983. Generator Attachments were used to describe and reference specific generator procedures.	Overview document - Generator Attachments provide more detailed information.
TWCP-698	B	Gives Material Type compositions	NMT Memo, NMT-7 WM/EC-96-032 Benchmark Environmental Corp. Memo, AL-7193 BEC	Gives Material Type compositions	Does not give information on how material may fractionate in TA-55 waste processes
TWCP-700	C	*Attachment 3 to the Los Alamos TRU Waste Certification Plan for Newly Generated TRU Waste,* R05	*NMT-7 Attachment, January 1995,* TRUWM-TA55-CPA-03,R00	Documents controls to meet WIPP WAC were implemented and how independent verification was accomplished.	Information is not extremely detailed.

* Information Category Codes: A = forms intended for use in waste certification, B = data from controlled databases and published documents, C = unpublished data, and D = interviews, memos, and letters

TWCP Record No.	Information Category Code*	Information	Source	Summary	Limitations
TWCP-701	B	*TA-55 Generator Attachment* to the *TRU Waste Certification Plan for Newly Generated TRU Waste*	*TA-55 Attachment, 1987,* TRU-MST12-CPA-03,R00	Document controls to meet WIPP WAC were implemented and how independent verification was accomplished	Information is not extremely detailed
TWCP-816	D	Jim Foxx Interview on Number of Layers of Packaging	C.L. Foxx, Los Alamos National Laboratory	Waste was co-mingled with room trash, and was initially boxed as low-level waste. Subsequently, some of these waste boxes were returned for disposal in drums as TRU waste when on-site radioassay results showed them exceeding the low-level discard limits.	None
TWCP-882 (UCNI)	D	Secondary Radionuclides and Toxic Metals in TA-55 TRU Waste	Memo from Jim Foxx	Lists additional radionuclides and metals potentially in waste, subdivided by process/status code. Covers time period from 1978 to present.	Best information available, but it is based on worker recollection because other records are not available.
TWCP-886	C	Color Flow Diagram of Pu-processes at TA-55.	Diagram from Jim Foxx	Indicates that process inputs are thermally treated and that heavy metals from process inputs end up in the nitric acid evaporator bottoms.	Does not indicate solvent input to processes.
TWCP-887	D	Co-mingling of Defense and Non-Defense TRU Waste	Memo from Jim Foxx	Wastes generated from defense and non-defense activities were not segregated at TA-55 through 1997	None
TWCP-2501	B	"Backlog Waste Reassessment Baseline Book, Waste Form 34"	Rocky Flats Environmental Technology Site Report 1995	Page WF34-10 contains results of tests for corrosivity	Tests were conducted on residues rather than on waste.
TWCP-2540 (UCNI)	A	Answers to questions about pyrochemical processes	Jim Foxx, NMT-7-WM/EC-99-118	Also contains old records of analysis of DOR salts	None

* Information Category Codes: A = forms intended for use in waste certification, B = data from controlled databases and published documents, C = unpublished data, and D = interviews, memos, and letters

TWCP Record No.	Information Category Code*	Information	Source	Summary	Limitations
M-001/ TWCP-3546 (UCNI)	D	Process description, P/S diagram - APD	Hydrothermal Processing NMT6-SOP-AT-103-R00 04/16/96	Describes an organic destruction process to remove organic and nitrate components and facilitate collection and separation of the actinides.	F-listed solvents may have been used. No information was available to confirm or disprove.
M-004/ TWCP-3546 (UCNI)	D	Process description	Superacid Research and Development 403-GEN-R00; 01/30/89 SAS-100-R00; 1/30/89; appears to be the same as 403-GEN-R00 (1/30/89)	Dissolution of actinides and actinide-containing matrices in superacids. Resulting solutions are analyzed by a variety of methods.	P/S code is not identified in procedure but process is consistent with SA.
M-005/ TWCP-3546 (UCNI)	D	Process description, chemical list, P/S diagram – AX	Operation of the Solution Assay Instruments (SAIs) 413-GEN-R00 through R02; 8/8/88 and 1/23/89, no date for R02	Describes rapid, in-process assay of Pu in nitric or hydrochloric acid. Assay solutions are accumulated for transfer to chloride or nitrate processes. Related procedures include Analyst's Procedure for SAI Samples, 420-GEN-R00, 11/12/86; User Procedure for Solution Assay Instruments IO4 and IO5, 513-ACC-R00, 2/9/87; and 531-MST10-R1, 11/88.	None

* Information Category Codes: A = forms intended for use in waste certification, B = data from controlled databases and published documents, C = unpublished data, and D = interviews, memos, and letters

TWCP Record No.	Information Category Code*	Information	Source	Summary	Limitations
M-006/ TWCP-3546 (UCNI)	D	Process description, chemical list; process code AD identified only in latest procedure (403-GEN-R03.1)	Room 208 Purification Process Development, 431-GEN-R00 through R02; 5/6/88 through 7/31/90; Room 208 Process Development Glovebox Operations, 431-GEN-R03 through R03.1; 3/23/92 through 9/30/94	Procedures generally describe a variety of processes involving research, process development, small-scale "trouble-shooting," and special materials preparations of isotopes and isotopic mixtures of Pu, U, Am, and Np. Various acids, caustics, oxidizing and reducing agents, solvent extraction chemicals, and ethanol and methanol ("infrequently"). 431-GEN-R02 indicates the use of carbon tetrachloride as a solvent diluent during the time period 9/91-3/92.	The procedures are brief and state "Because of the variety of operations involved with this research effort, no one detailed procedure can describe all the activities that are carried out."
M-007/ TWCP-3546 (UCNI)	D	Process description, P/S diagram - SO	Safety Considerations in the Operation of the MST-12, Room 105, Ash Pretreatment Loop, 488-REC-R00; 3/24/88	A gas flow loop is used for room temperature fluorination of ash samples containing Pu residues. The fluorinating agent causes Pu in the solid residue to react chemically to form solid PuF_4 or gaseous PuF_6.	Procedure does not contain a chemical list or describe the process inputs. The procedure states "Because the process is in developmental stage, operating procedures and flow configuration are subject to frequent change.
M-008/ TWCP-3546 (UCNI)	D	Process description, reagent list, P/S diagram - SO	Super Oxidizer Fluorination of Ash, FPR-101-R00; 6/6/89 FPR-101-R00 is also known as 488-REC-R00	A gas flow loop is used for room temperature fluorination of ash samples containing Pu residues. The fluorinating agent causes Pu in the solid residue to react chemically to form solid PuF_4 or gaseous PuF_6.	None

* Information Category Codes: A = forms intended for use in waste certification, B = data from controlled databases and published documents, C = unpublished data, and D = interviews, memos, and letters

TWCP Record No.	Information Category Code*	Information	Source	Summary	Limitations
M-009/ TWCP-3546 (UCNI)	D	Process description, reagent list, P/S diagram - SO	Operation of the Plutonium FOOF Loop, FPR-100-R01; 10/17/90	The loop is used to flow a gas fluorinating agent through a gas-solid reactor where Pu in the solid residue reacts chemically to form gaseous PuF_6. Methanol is used in the cold trap.	None
M-010/ TWCP-3546 (UCNI)	D	Process description, reagent list, P/S diagram - CK	Operation of the Plutonium Fluorination Loop, FPR-101-R0-0; 2/7/91	The loop is used to flow a gas fluorinating agent through a gas-solid reactor where Pu in the solid residue reacts chemically to form gaseous PuF_6. 1-propanol and trichloroethylene are used in the cold traps and cooling baths.	Procedure does not describe the configuration of the cold traps and cooling baths, i.e., whether these are located inside or outside the glovebox and whether the chemicals used in cold traps/cooling baths would contaminate the waste stream.
M-011/ TWCP-3546 (UCNI)	D	Process description, reagent list, P/S diagram - FDL	Operating the FOOF Demonstration Loop, FPR-102 through R01; 8/7/91 through 3/12/93	FOOF demonstration line is used to conduct experiments that demonstrate the feasibility for fluorination at room temperature. Pu in solid residue reacts chemically to form gaseous PuF_6.	Documents do not mention the use of solvents.
M-012/ TWCP-3546 (UCNI)	D	Process description, chemical list, P/S diagram - FLU	Halogenation Research and Development, FPR-104-R00; 3/25/92	Basic research operation involving gas-solid and solid-solid halogenation (i.e., fluorination and chlorination) of actinides, particularly Pu and Np. Procedure describes operations and materials similar to fluorination and FOOF loop procedures.	None

* Information Category Codes: A = forms intended for use in waste certification, B = data from controlled databases and published documents, C = unpublished data, and D = interviews, memos, and letters

TWCP Record No.	Information Category Code*	Information	Source	Summary	Limitations
M-013/ TWCP-3546 (UCNI)	D	Process description, chemical list, P/S diagram – EXT	Plutonium Extraction Research and Development, FPR-105-R00; 3/25/92	Document describes an R&D effort exploring aqueous extraction of Pu from various waste streams, particularly pyrochemical salts. Metals in pyrochemical stream would include Na, K, and Ca when exposed to aqueous materials.	Procedure does not identify process inputs. Equipment and supplies list includes "spent pyrochemical salts."
M-014/ TWCP-3546 (UCNI)	D	Process description, P/S diagram – EDC	Electrochemistry R&D Experiments, FRP-108-R00; 12/19/95	Document describes experiments using electrochemical methodologies to decontaminate items (e.g., gloveboxes), supercede current processes that produce large amounts of waste, or speed up reactions. Electrolytes are typically inert nonhazardous salts.	Process inputs are indicated as being from the vault or P/S code MA, but inputs are not precisely defined or identified.
M-015/ TWCP-3546 (UCNI)	D	Process description, chemical list, P/S diagram – EOC	Surface Area Analysis Using the Quantasorb/Quantector 280-MRD-R00; 3/30/92 through 4/8/94 (Draft)	Mixtures of helium and nitrogen are passed through a U-shaped cell containing a sample to calculate surface area and pore size distribution of the sample, and analyze surface characteristics.	Solvents or other chemicals are not indicated in the reagent list.
M-018/ TWCP-3546 (UCNI)	D	Process description, chemical list, P/S code not identified (see limitations)	Americium R&D Facilities, 474-REC-R00; 7/17/79	Experimental operations involve evaporator hydroxide cake dissolution, filtration, sampling and analysis, extraction, separation to remove organics, and determination of Pu and Am. See 474-REC-R02 (M-020).	P/S code not identified in the procedure but process is consistent with process described in 474-REC-R02; therefore, AD seems to be appropriate P/S code. Lead compounds listed in R01 but not in R00 or R02-03.

* Information Category Codes: A = forms intended for use in waste certification, B = data from controlled databases and published documents, C = unpublished data, and D = interviews, memos, and letters

TWCP Record No.	Information Category Code*	Information	Source	Summary	Limitations
M-019/ TWCP-3546 (UCNI)	D	Process description, chemical list, P/S code not identified (see limitations)	Process Research and Development Facilities, 474-REC-R01; 8/29/83	Various wet chemistry experiments (e.g., chloride anion-exchange separations involving various radioactive elements). Research activities no longer limited to Americium. See 474-REC-R02 (M-020).	P/S code not identified in the procedure but process is consistent with process described in 474-REC-R02; therefore, AD seems to be appropriate P/S code. Lead compounds are listed in this procedure but not in R00, R02 or R03.
M-020/ TWCP-3546 (UCNI)	D	Process description, chemical list, P/S diagram – AD	Research, Development, and Demonstration Facilities, 474-REC-R02; 12/1/86	Various chemical and electrochemical experimental research with actinide solutions. Chemical list is similar to 474-REC-R01 except for the following: Gallium, Tantalum, and Platinum metals, oxides, or salts; hydrazine dihydrochloride; perchloric acid; tetraethylamine chloride; and tetraethylammonium hydroxide.	Lead compounds are listed in R01 but not in R00, R02 or R03.
M-021/ TWCP-3546 (UCNI)	D	Process description, chemical list, P/S diagram – AD	Research, Development, and Demonstration Facilities, 474-REC-R03; 2/3/89	Various chemical and electrochemical experimental research with actinide solutions. Chemical list identical to 474-REC-R02, with the exception of the following: "DHDCMP, TBP, and CMPO used in extraction experiments."	Lead compounds are listed in R01 but not in R00, R02 or R03.
M-022/ TWCP-3546 (UCNI)	D	Process description, chemical list, P/S diagram – AD	Sensors and Instrumentation Development, 476-REC-R00; 2/3/89	Various research studies involving sensors and instrumentation suitable for online chemical analysis.	None

* Information Category Codes: A = forms intended for use in waste certification, B = data from controlled databases and published documents, C = unpublished data, and D = interviews, memos, and letters

TWCP Record No.	Information Category Code*	Information	Source	Summary	Limitations
M-023/ TWCP-3546 (UCNI)	D	Process description, chemical list, P/S diagram – HRS	Low Temperature Multiple Reflection Spectroscopic Cell, SAS-106-R00 through R02; 1/9/90 through 3/30/93	Fluorinated actinide compounds are introduced into a long-path, variable temperature cell for spectroscopic studies. The procedure addresses passivation, filling, cooling, emptying, and maintaining the spectroscopic cell.	Details of procedural information (e.g., chemical lists, diagrams) unavailable for 1/9/90 and 11/12/91 versions of procedure.
M-024/ TWCP-3546 (UCNI)	D	Process description, reagent list, P/S diagram – SA	Organoactinide R&D, SAS-107-R00 through R01; 10/23/89 through 5/1/91	R00 describes studies involving organometallic chemistry of uranium, thorium, neptunium, and plutonium in non-aqueous solvents. R01 describes small-scale organoactinide R&D operations involving fundamental research on the synthesis in non-aqueous media of new actinide compounds, their characterization and reaction chemistry, and application to existing actinide processing technologies. Due to the range of experimental studies, a definitive list of reagents cannot be given. Previous studies have involved the use of aliphatic, ethereal, aromatic, and halocarbons (e.g., tetrahydrofuran, diethyl ether, benzene, toluene, pyridine, and dichloromethane).	Chemical reagents and solvents are not specified but may include hydrocarbon, ethereal, and aromatic solvents, organic reagents, and inorganic salts.

* Information Category Codes: A = forms intended for use in waste certification, B = data from controlled databases and published documents, C = unpublished data, and D = interviews, memos, and letters

TWCP Record No.	Information Category Code*	Information	Source	Summary	Limitations
M-025/ TWCP-3546 (UCNI)	D	Process description, chemical list, P/S diagram – AC1 and AC2	Actinide Chemistry Research and Development, SAS-107-R03; 3/10/94	Document addresses a broad range of lab activities involving radioactive and non-radioactive materials in support of applied actinide chemistry research. Activities include preparation of solvents and reagents, synthesis of new chemical compounds, and characterization and analysis of new chemical compounds using wet chemistry methods and analytical instrumentation. A variety of chemicals are used, including organic solvents (e.g., tetrahydrofuran, toluene, benzene, and dichloromethane), organic reagents (e.g., alcohols, phosphines, phosphates), acids and bases, and metals.	The chemical list is not definitive. The procedure states "The chemical list is representative of the types of chemicals that are used in operations covered by this procedure."
M-026/ TWCP-3546 (UCNI)	D	Process description, chemical list, P/S diagram – CV	Actinide Separation R&D Operations, SAS-108-R00; 3/25/91	A gas loop is used to flow various compounds through a reactor. Pu reacts to form recoverable Pu compounds. Pu compounds or Pu-bearing matrices may be subjected to further treatment to achieve complete recovery. Treatment of ash with carbon tetrachloride to create chlorinated Pu to facilitate further separation. Reagent is destroyed in the process. Chemical list includes acids and bases, chlorinated hydrocarbons (e.g., carbon tetrachloride, tetrachloroethylene), actinides, and compressed gases.	Although not precisely stated in the procedure, it appears that chlorinated hydrocarbons are used as chlorinating agents (therefore, not as solvents) in the reaction loop.

* Information Category Codes: A = forms intended for use in waste certification, B = data from controlled databases and published documents, C = unpublished data, and D = interviews, memos, and letters

TWCP Record No.	Information Category Code*	Information	Source	Summary	Limitations
M-027/ TWCP-3546 (UCNI)	D	Process description, chemical list, P/S diagram – CV	Plutonium Chlorination, SAS-108-R01 through R02; 10/26/92 through 11/10/94 (See note in limitations.)	Describes the recovery or purification of Pu compounds by reaction with liquid, gaseous, and solid reagents in a gas-flow loop. Process involves conversion of Pu chloride solutions to anhydrous $PuCl_3$. Chemical list includes acids and bases, carbon tetrachloride, hydroxylamine hydrochloride, actinides, and compressed gases.	Procedure revisions appear to be similar with no significant changes indicated. R02 is a draft dated 10/28/93. R01 (11/10/94) incorporates two change sheets (R01.1 and R01.2) that clarified administrative aspects of the procedure.
M-029/ TWCP-3546 (UCNI)	D	Process description, P/S diagram – IB	Matrix Study of Pyrochemical Salts, 556-NMT4-R01 through R03; 9/12/90 through 5/31/93	Feed material inputs may comprise Pu metal, pyrochemical salts of sodium, calcium, and magnesium, and crucible pieces. Describes process for crushing, pulverizing, blending, roasting, and sieving pyrochemical salts in PF-4, Room 208, G264. The research activity determined the effect that pyrochemical salt matrices have on the accuracy of NDA measurements in like materials. The results dictate handling and processing of the salts, and may be used for correction of bias measurements.	None
M-030/ TWCP-3546 (UCNI)	D	P/S code title, description, and effective dates	Jim Foxx, SME, 01/00	SME review of preliminary AK Summary Report for TA-55 Miscellaneous Operations indicated that P/S code IB was referred to as "Incoming Oxide Blending" from May 1986 to July 1992, and that the procedure involved rod milling prior to screening. See also M-029.	A procedure was not identified for this process during the time period indicated.

* Information Category Codes: A = forms intended for use in waste certification, B = data from controlled databases and published documents, C = unpublished data, and D = interviews, memos, and letters

TWCP Record No.	Information Category Code*	Information	Source	Summary	Limitations
M-031/ TWCP-3546 (UCNI)	D	Process wastes	Jim Foxx, SME, 01/00	SME review of preliminary AK Summary Report for TA-55 Miscellaneous Operations indicated that chromium may be present in the layer of sand and slag removed during the electrolytic decontamination process. See also M-014.	Conclusions are based on the SME's recollections of process activities in which he was directly involved.
M-034/ TWCP-3546 (UCNI)	D	P/S code description	Gordon Jarvinen, 02/16/00	Interview regarding operations for P/S codes AD, APD	Conclusions are based on the SME's recollections of process activities in which he was directly involved. Mr. Jarvinen could only speak to operations for P/S code AD after 1989.
M-035/ TWCP-3546 (UCNI)	D	P/S code description	Jerry Foropoulos, 02/16/00	Interview regarding operations for P/S codes CK, CV, EXT, FLU, SO, IE, LI	Conclusions are based on the SME's recollections of process activities in which he was directly involved.
M-036/ TWCP-3546 (UCNI)	D	P/S code description	Tom Mills, 02/16/00	Interview regarding operations for P/S codes FDL and HRS	Conclusions are based on the SME's recollections of process activities in which he was directly involved.
M-037/ TWCP-3546 (UCNI)	D	P/S code description	Larry Avens, 03/02/00	Interview regarding operations for P/S codes MAS and SA	Conclusions are based on the SME's recollections of process activities in which he was directly involved.
M-038/ TWCP-3546 (UCNI)	D	P/S code description	Bill Zwick, 02/29/00; and John Byrd, 03/01/00	Interview regarding operations for P/S codes AC1 and AC2	Conclusions are based on the SMEs' recollections of process activities in which they were directly involved.

* Information Category Codes: A = forms intended for use in waste certification, B = data from controlled databases and published documents, C = unpublished data, and D = interviews, memos, and letters

TWCP Record No.	Information Category Code*	Information	Source	Summary	Limitations
M-039/ TWCP-3546 (UCNI)	D	P/S code description	Steve Long, 02/29/00	Interview regarding operations for P/S codes IB and STF	Conclusions are based on the SME's recollections of process activities in which he was directly involved.
M-040/ TWCP-3546 (UCNI)	D	P/S code description	Mary Ann Reimus, 02/17/00	Interview regarding operations for P/S code EOC	Conclusions are based on the SME's recollections of process activities in which she was directly involved.
M-041/ TWCP-3546 (UCNI)	D	P/S code description	Doug Wedman, 02/16/00	Interview regarding operations for P/S code EDC	Conclusions are based on the SME's recollections of process activities in which he was directly involved.
M-042/ TWCP-3546 (UCNI)	D	P/S code description	James Barfield, 02/25/00	Interview regarding operations for P/S codes ACL, ICP, and XES	Conclusions are based on the SME's recollections of process activities in which he was directly involved.
M-043/ TWCP-3546 (UCNI)	D	P/S code description	John Byrd, 03/01/00	Interview regarding operations for P/S code RASS/RSS	Conclusions are based on the SME's recollections of process activities in which he was directly involved.
M-044/ TWCP-3546 (UCNI)	D	P/S code description	Charles Davis, 03/01/00	Interview regarding operations for P/S code SMP	Conclusions are based on the SME's recollections of process activities in which he was directly involved.
M-045/ TWCP-3546 (UCNI)	D	P/S code description	Keith Fife, 02/28/00	Interview regarding operations for P/S code VS	Conclusions are based on the SME's recollections of process activities in which he was directly involved.

* Information Category Codes: A = forms intended for use in waste certification, B = data from controlled databases and published documents, C = unpublished data, and D = interviews, memos, and letters

TWCP Record No.	Information Category Code*	Information	Source	Summary	Limitations
M-046/ TWCP-3546 (UCNI)	D	P/S code description	Jim Foxx, 02/25/00 through 06/23/00	Interviews and correspondence regarding operations for P/S codes RD, NCD, WM, and XO/X0	Conclusions are based on the SME's recollections of process activities in which he was directly involved.
M-047/ TWCP-3546 (UCNI)	D	P/S code description	Max Martinez, 02/29/00	Interview regarding operations for P/S code LIBS	Conclusions are based on the SME's recollections of process activities in which he was directly involved.
M-048/ TWCP-3546 (UCNI)	D	P/S code description	Rick Masen, 03/01/00	Interview regarding operations for P/S code ME	Conclusions are based on the SME's recollections of process activities in which he was directly involved.
M-049/ TWCP-3546 (UCNI)	D	P/S code description	Steve Yarborough, 03/10/00	Interview regarding operations for P/S code XP	Conclusions are based on the SME's recollections of process activities in which he was directly involved.
M-050/ TWCP-3546 (UCNI)	D	P/S code description	Dennis Wulff, 04/17/00	Interview regarding P/S code XO	Conclusions are based on the SME's recollections of process activities in which he was directly involved.
M-053/ TWCP-3546 (UCNI)	D	Process input information	Jim Foxx, 04/16/00	Information regarding process inputs to P/S code AD	None.
TWCP-3547/Cl-25	D	RCRA-listed constituents in analytical solutions from CLS-1	Interview with Jim Foxx, 9/23/99	Analytical laboratory solutions from CLS-1 are potentially contaminated with RCRA-regulated heavy metals, mercury and lead, as well as RCRA-listed organic substances used as solvents, including acetone, carbon tetrachloride, chlorobenzene, chloroform, methanol, methylene chloride, tetrachloroethylene, xylene	

* Information Category Codes: A = forms intended for use in waste certification, B = data from controlled databases and published documents, C = unpublished data, and D = interviews, memos, and letters

TWCP Record No.	Information Category Code*	Information	Source	Summary	Limitations
TWCP-3730 (UCNI)	B	Pyrophoricity characterization	Characterization of Direct Oxide Salts (LA-CP-95-0098)	Hydrogen generation and pyrophoricity of DOR salts. Also gives reference for MSE, ER, and Cr-containing salts.	None
TWCP-3731	D	Sodium pyrophoricity in pyrochemical salts	Memo (MST-12-ARO-88-052)	Treatment of sodium in salts is effective	Sodium only
TWCP-3732	C	Experimental data on calcium pyrophoricity in salts	Memo (MST-12-ARO-88-077)	Treatment of calcium in salts is effective	Calcium only
TWCP-3943	D	Procedure for Waste Management at TA-55	TA-55 Document, 406-GEN-R00	Contains information on waste management procedures in 1978	None, but doesn't address today's waste management concerns
TWCP-4162	D	Answers to questions about P/S codes PB, PuBe, CC, MB, MS, FF, BF, and other issues	Interview with Jim Foxx, 10/12/00	Answers to questions on use of asbestos at TA-55, non-defense activities, and specific P/S codes in chloride operations.	None
TWCP-4164	D	Answers to questions about various P/S codes	Interview with Jim Foxx, 10/16/00	Answers to questions on use of Ag, disposal of ash and resins, and use of gases.	None
TWCP-4166	D	Answers to questions about P/S codes DO, EV, HP, CF, OR, RM, PY	Interview with Jim Foxx, 10/17/00	Answers to questions on use of Cr and Ag, RCRA metals in cement, asbestos in furnaces and gloves, and disposal of spray cans used in gloveboxes.	None
TWCP-4167	D	Answers to questions about segregation of non-defense wastes; leachability of Ag from ash	Interview with Jim Foxx, 10/18/00	Segregation of non-defense wastes began on 27 August 1998; analytical data show that Ag in ash is below limits of regulatory concern	None

* Information Category Codes: A = forms intended for use in waste certification, B = data from controlled databases and published documents, C = unpublished data, and D = interviews, memos, and letters

TWCP Record No.	Information Category Code*	Information	Source	Summary	Limitations
TWCP-4720	B	Describes the procedure to be taken at TA-55 in the event of a misfire or unconsumed explosives (from the Impact Test Facility 40-mm gun, P/S codes ITF and ITF4) to ensure that explosives do not enter the waste stream	40-mm Powder Breech Project Waste Management Plan, Rev. 2 (issued March 27, 2000)	Procedure to be taken at TA-55 in the event of a misfire or unconsumed explosives (from the Impact Test Facility 40-mm gun) to ensure that explosives do not enter the waste stream	Does not appear to be a controlled document. Without revision history, cannot tell when this document was first issued, and how the potential for unconsumed explosives was addressed when the Impact Test Facility (ITF) began in 1996
TWCP-5164	D	Sources of Cs-137 and Pa-231 in TA-55 TRU waste	Interview with Jim Foxx (TA-55 SME) on April 2, 2001	Plutonium operations never handled Cs-137 or Pa-231 in any of the Pu processing areas at TA-55. However, Cs-137 is expected to be present in the wastes because it is a fission product of several Pu isotopes. Pa-231 is expected to be present (as a function of the age of the waste) because it is a decay chain daughter of Pu-239 and U-235.	None
TWCP-5165	D	Sources of Cs-137, Pa-231, and Cm-244 in TA-55 TRU waste	Interview with Jim Foxx (TA-55 SME) on April 11, 2001	Dominant source of Cs-137 expected to be due to residual contamination from original separation of Pu from production fuel. Cm-244 introduced in P/S code DOP starting in 1988, but could also show up after that date in IS, WE, CA and CF.	None
TWCP-AK-2.1-002,R.2	A	*Process Acceptable Knowledge Report for Chloride Operations at TA-55*	Generators interview and TWCP AK references	Detailed information on each P/S code for chloride operations at TA-55	None

* Information Category Codes: A = forms intended for use in waste certification, B = data from controlled databases and published documents, C = unpublished data, and D = interviews, memos, and letters

TWCP Record No.	Information Category Code*	Information	Source	Summary	Limitations
TWCP-AK-2.1-003,R.2	A	*Process Acceptable Knowledge Report for Metal Operations at TA-55*	Generators interview and TWCP AK references	Detailed information on each P/S code for metal operations at TA-55	None
TWCP-AK-2.1-005,R.2	A	*Process Acceptable Knowledge Report for Nitrate Operations at TA-55*	Generators interview and TWCP AK references	Detailed information on each P/S code for nitrate operations at TA-55	None
TWCP-AK-2.1-006,R.2	A	*Process Acceptable Knowledge Report for Pyrochemical Operations at TA-55*	Generators interview and TWCP AK references	Detailed information on each P/S code for pyrochemical operations at TA-55	None
TWCP-AK-2.1-007,R.2	A	*Process Acceptable Knowledge Report for Special Processing Operations at TA-55*	Generators interview and TWCP AK references	Detailed information on each P/S code for special processing operations at TA-55	None
TWCP-PLAN-0.2.7-001,R.5	C	*Los Alamos National Laboratory Transuranic Waste Characterization Acceptable Knowledge Information Summary*	LANL TA-55 waste management database, LANL TA-54 TRU waste management database, and TWCP AK reference base on generator's original data	Detailed information on each waste drum and waste stream	None

* Information Category Codes: A = forms intended for use in waste certification, B = data from controlled databases and published documents, C = unpublished data, and D = interviews, memos, and letters

MAP OF LANL

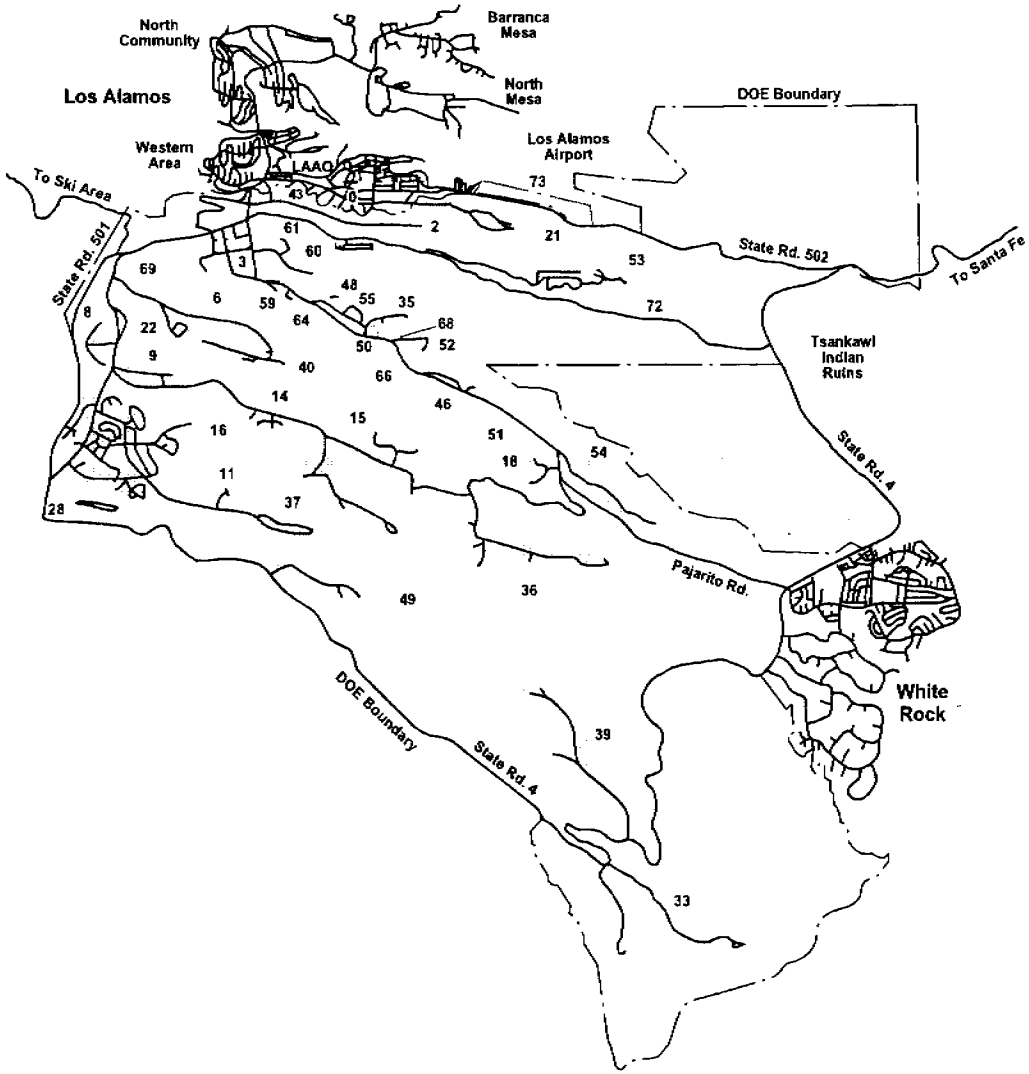

Technical Area Locations

TA-0	Unassigned Land Reserve
TA-2	Omega Site
TA-3	South Mesa Site
TA-5	Beta Site
TA-6	Two Mile Mesa Site
TA-8	Anchor Site West
TA-9	Anchor Site East
TA-11	K-Site
TA-14	Q-Site
TA-15	R-Site
TA-16	S-Site
TA-18	Pajarito Laboratory
TA-21	DP-Site
TA-22	TD-Site
TA-28	Magazine Area A
TA-33	HP-Site
TA-35	Ten Site
TA-36	Kappa Site
TA-37	Magazine Area C
TA-39	Ancho Canyon Site
TA-40	DF-Site
TA-41	W-Site
TA-43	Health Research Lab & DOE Headquarters
TA-46	WA-Site
TA-48	Radiochemistry Site
TA-49	Frijoles Mesa Site
TA-50	Waste Management Site
TA-51	Radiation Exposure Facility
TA-52	Reactor Development Site
TA-53	Meson Physics Facility
TA-54	Waste Disposal Site
TA-55	Plutonium Facility Site
TA-57	Fenton Hill Site
TA-58	Two Mile North Site
TA-59	OH-Site

MAP OF TA-55

Note: The Plutonium Facility, Building PF-4, is labeled PF-4 on this map.

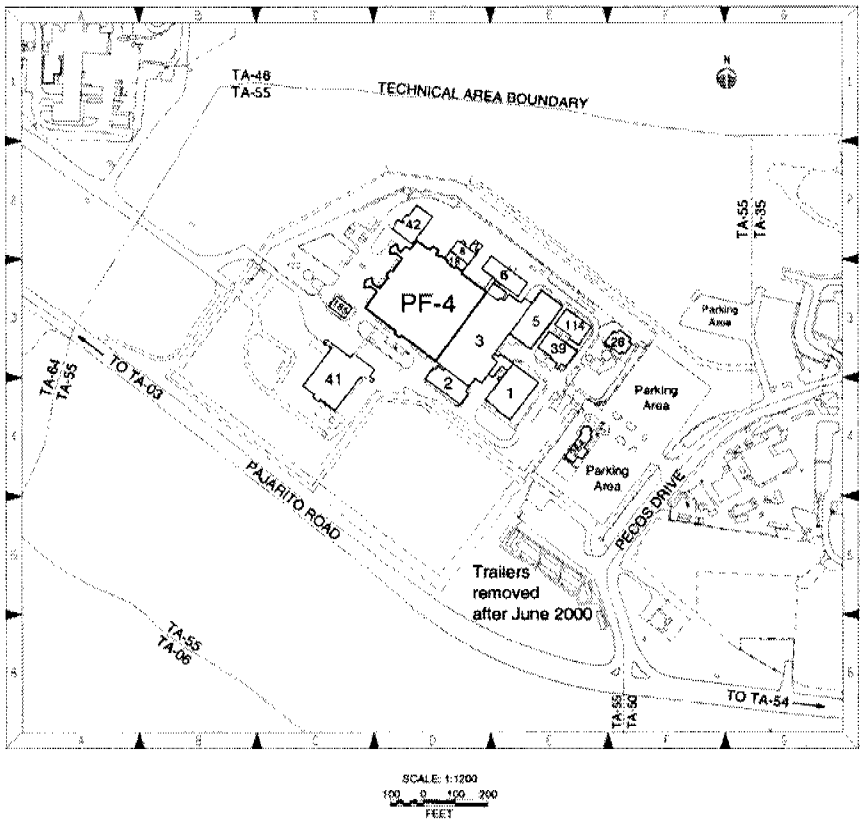

TIMELINE FOR TA-55 MISCELLANEOUS PROCESSES

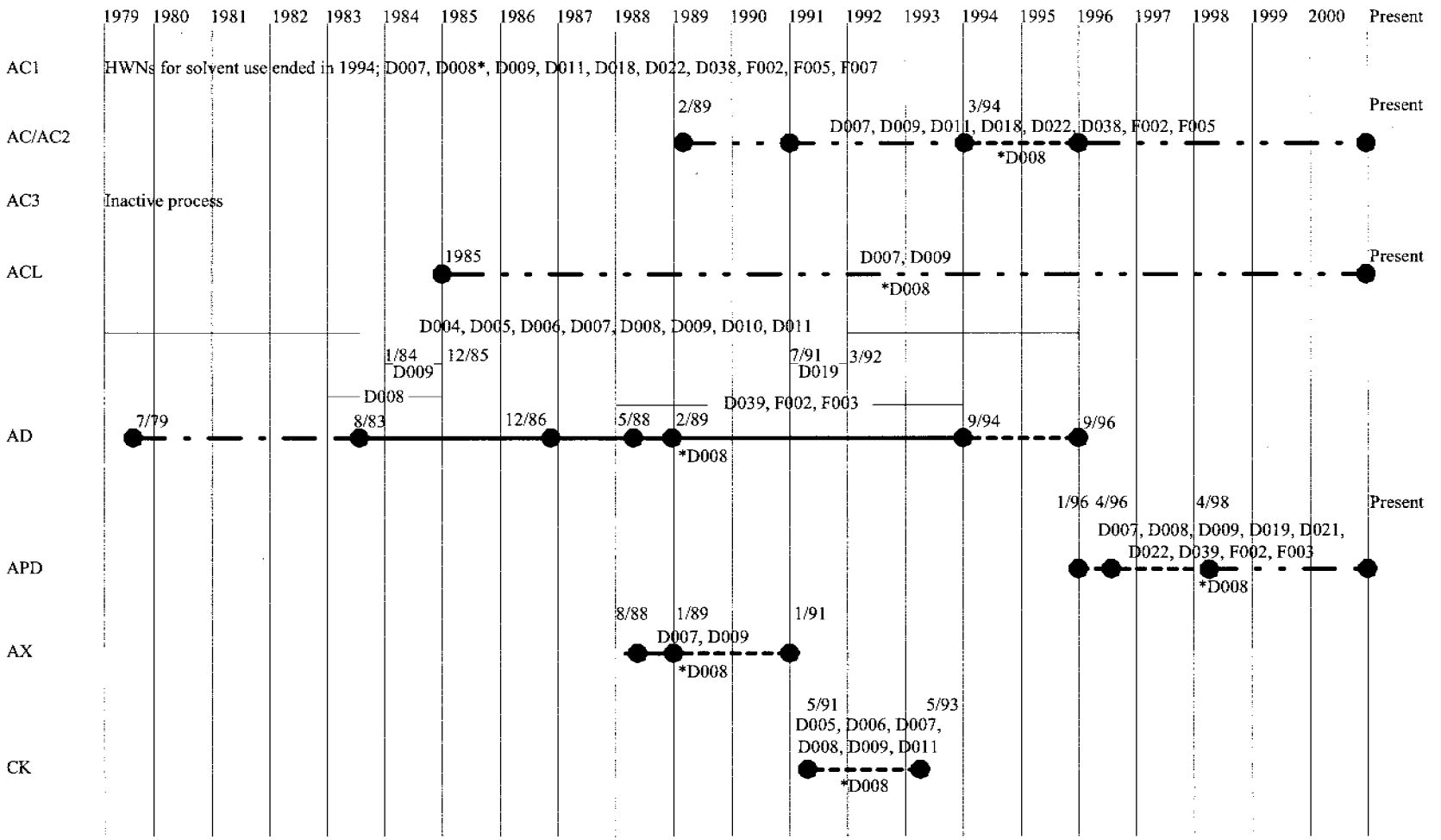

TIMELINE FOR TA-55 MISCELLANEOUS PROCESSES (continued)

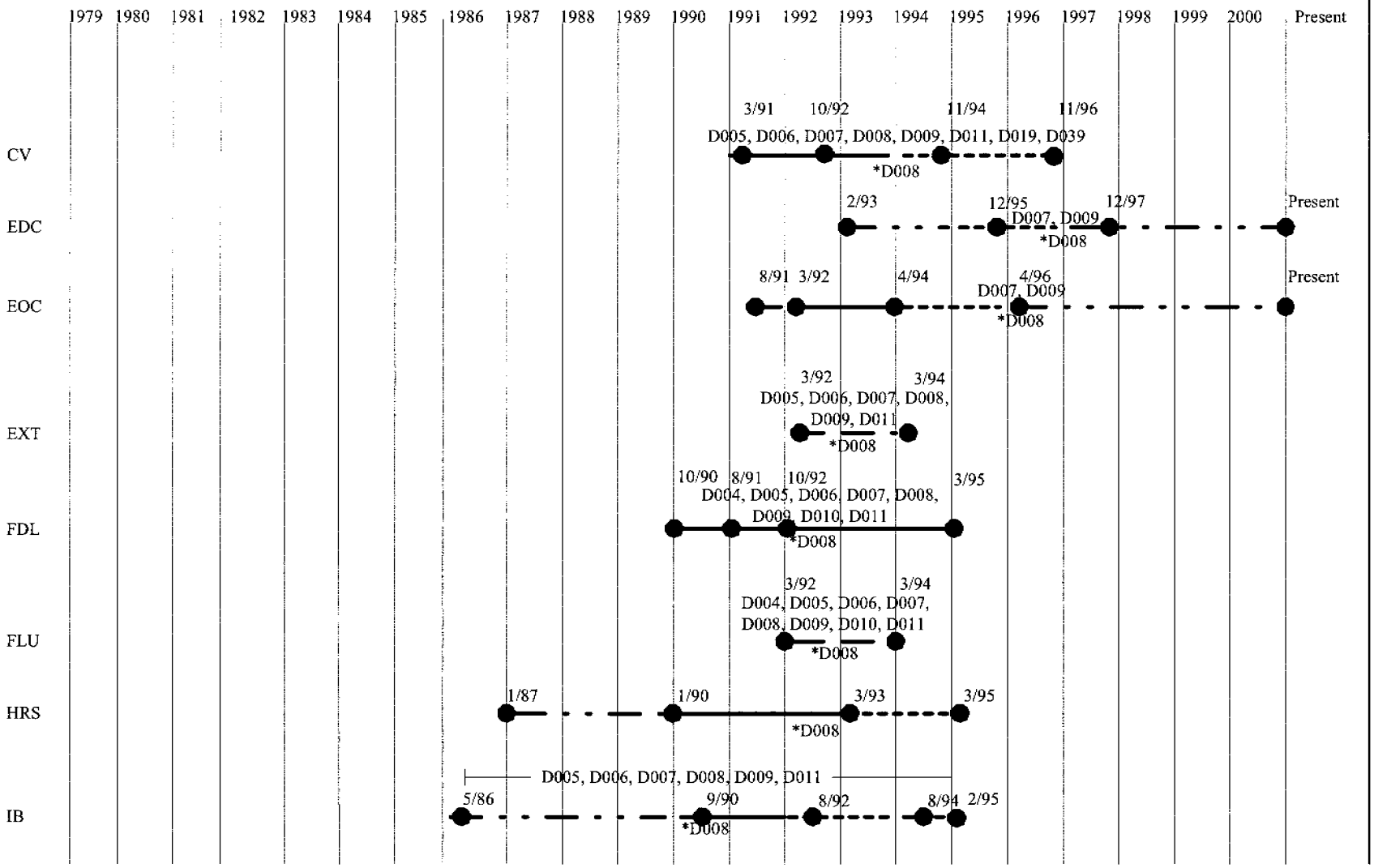

TIMELINE FOR TA-55 MISCELLANEOUS PROCESSES (Continued)

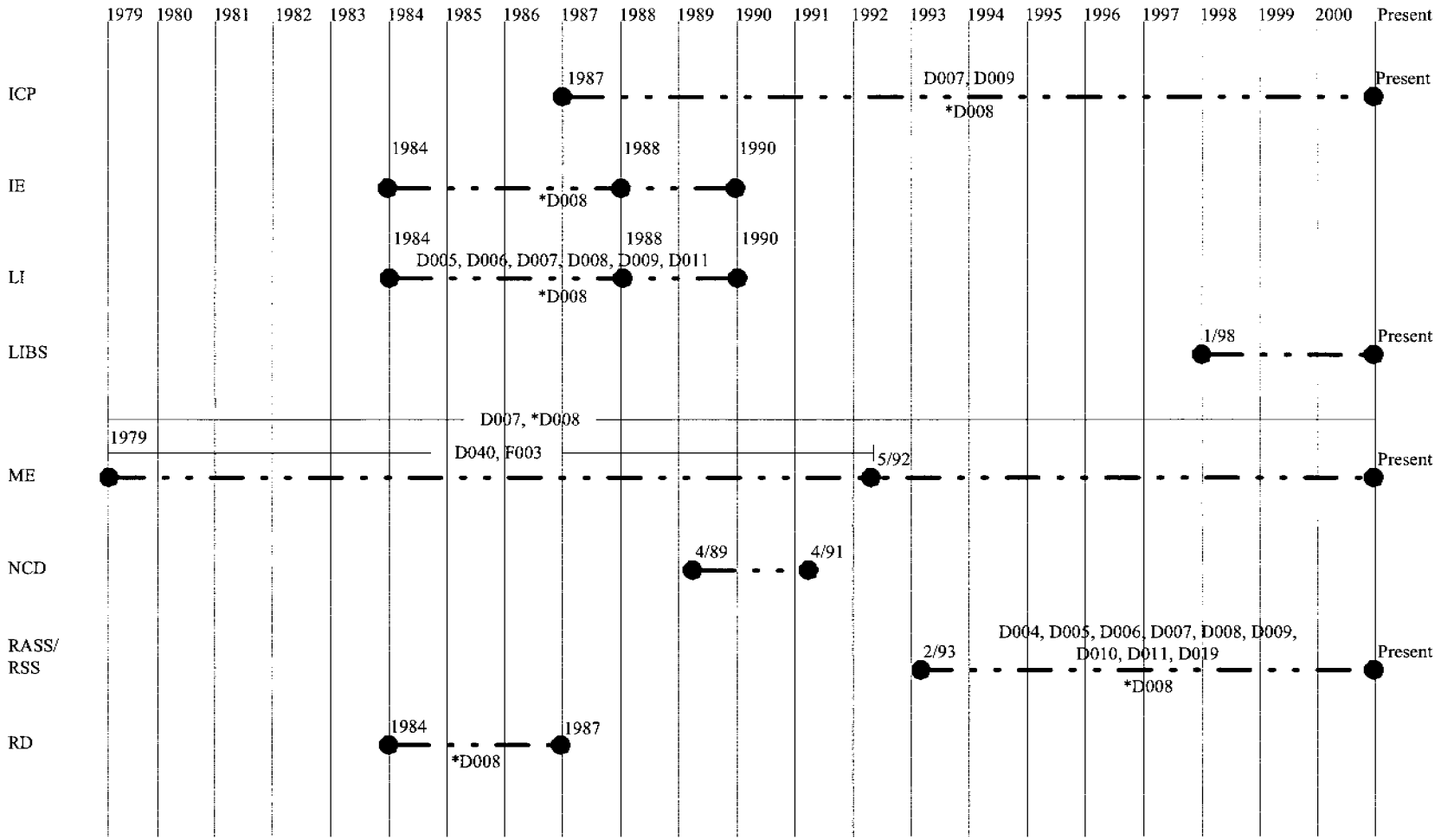

TIMELINE FOR TA-55 MISCELLANEOUS PROCESSES (continued)

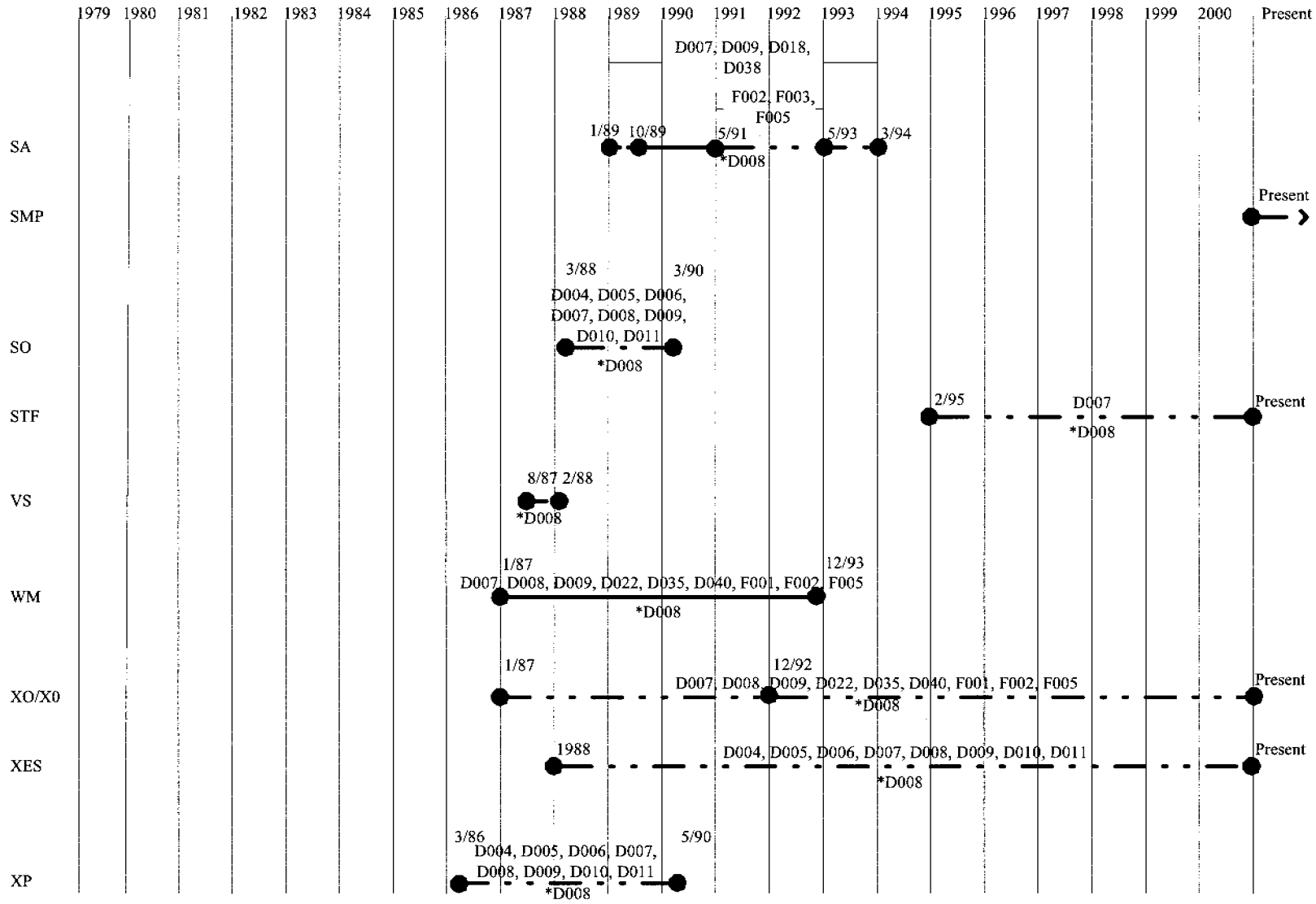

* Prior to 1987, leaded gloves were not segregated from combustible debris. Between 1987 and May 1992, they were segregated and discarded in the metal debris waste stream. Since May 1992, they have been routinely segregated and assigned to a leaded-glove waste stream, still under the originating P/S code (TWCP-4166).

TIMELINE EXPLANATION

The P/S code is established in either the P/S diagrams or in both (or all) revisions of the procedures designating the start and end dates (e.g., Rev. 0 to Rev. 1; or Rev. 0 to Rev. 5).

The P/S code is not identified in the procedure, but the process description matches the P/S code and the description in previous or later revisions of the same procedure.

Extrapolate out two (2) years beyond the last procedure to next possible review date.

The P/S code is not identified in the procedure, but the process description matches that of the P/S diagram or P/S code description.

Time period based on subject matter expert comments.

PROCESS INPUTS AND OUTPUTS

P/S Code	P/S Title	Process Inputs		Process Outputs		EPA Codes[2]	References[3]
		Feed Stream(s)	Chemicals/Reagents	Product	Waste Stream[1]		
AC AC2	Actinide Chemistry R&D	Actinide metals	Acetonitrile Actinide (Th-Am) metals Alcohols (unspecified) Alkali metals Alkaline earth metals Alkylating agents (unspecified) Benzene Chloroform Cryogens Dichloromethane Hexane Hydrochloric acid Inorganic reagents/complexes (unspecified) Inorganic salts (unspecified) Lanthanide metals Nitric acid Perchloric acid Phosphates Phosphines Potassium hydroxide Potassium salts Pyridine Silver salts Sodium hydroxide Sodium salts Tetrahydrofuran Toluene Transition metals Transition-lanthanide-, actinide- metal complexes	Solvated halide complexes yielding homoleptic alkyl complexes; and unspecified	Reaction byproducts, residues, precipitated salts, spent solvents, spent acids, filtration media, debris	D007, *D008, D009, D011, D018, D022, D038, F002, F005	M-025 M-038

P/S Code	P/S Title	Process Inputs		Process Outputs		EPA Codes[2]	References[3]
		Feed Stream(s)	Chemicals/Reagents	Product	Waste Stream[1]		
AC1	Actinide Chemistry R&D	Actinide metals	Acetonitrile Actinide (Th-Am) metals Alcohols (unspecified) Alkali metals Alkaline earth metals Alkylating agents (unspecified) Benzene Chloroform Cryogens Dichloromethane Hexane Hydrochloric acid Inorganic reagents/complexes (unspecified) Inorganic salts (unspecified) Lanthanide metals Nitric acid Perchloric acid Phosphates Phosphines Potassium hydroxide Potassium salts Silver salts Sodium hydroxide Sodium salts Toluene Transition metals Transition-lanthanide-, actinide- metal complexes	Solvated halide complexes yielding homoleptic alkyl complexes; and unspecified	Reaction byproducts, residues, precipitated salts, spent solvents, spent acids, filtration media, debris	D007, *D008, D009, D011, D018, D022, F002, F005 D038	M-025 M-038
AC3	Actinide Chemistry	NA	NA	NA	NA	NA	NA
ACL	Analytical Chemistry Lab	Plutonium and americium solutions	Nitric acid	None	Unused liquid samples, chromatography residues	D007, *D008, D009	M-042
AD	Actinide Processing	Evaporator	Aluminum nitrate	Unspecified	Spent aqueous and	D004,	M-006

P/S Code	P/S Title	Process Inputs		Process Outputs		EPA Codes[2]	References[3]
		Feed Stream(s)	Chemicals/Reagents	Product	Waste Stream[1]		
	Demonstration	hydroxide cakes; and various isotopes and isotopic mixtures of plutonium and uranium, occasionally ^{241}Am and ^{237}Np	Ascorbic acid Carbon tetrachloride CMPO DBBP DBBP/Isopar DHDCMP diisopropyl benzene Ethanol Gallium metal, oxide or salt Hydrazine dihydrochloride Hydrazine hydrochloride Hydrochloric acid Hydrofluoric acid Hydrogen peroxide Hydroxylamine chloride Hydroxylamine hydrochloride Hydroxylamine nitrate Kerosene Lead and lead hydroxide, oxide, or nitrate Methanol Na, K, Li, Mg, Ca, Fe, nitrates, chlorides, carbonates, bicarbonates, oxalate, nitrites n-dodecane Nitric acid Octyl phenyl-N Oxalic acid Perchloric acid Platinum and platinum-rhodium alloys Potassium dichromate Potassium hydroxide Potassium permanganate		organic solutions; extraction solvents; spent acids and bases; lead-bearing hydroxides, nitrates, and oxides; reducing agents; actinide salts, oxides, and metals; debris	D005, D006, D007, D008, *D008, D009, D010, D011, D019, D039, F002, F003	M-018 M-019 M-020 M-021 M-022 M-034 M-053

P/S Code	P/S Title	Process Inputs		Process Outputs		EPA Codes[2]	References[3]
		Feed Stream(s)	Chemicals/Reagents	Product	Waste Stream[1]		
			Pu, Am, Np, U, Ga, Pt, Ta metals, oxides, salts ^{239}Pu and ^{241}Am metal and various chemical states Sodium carbonate Sodium chlorite Sodium dithionate Sodium hydroxide Sulfuric acid Tantalum metal, oxide or salt TBP TBP/Isopar Tetrachloroethylene Tetraethylamine hydrochloride Tetraethylamine hydroxide Tetraethylammonium hydroxide				
APD	Actinide Processing Demonstration	Aqueous and organic mixtures of carbon tetrachloride, tributyl phosphate, organic solvents (unspecified), ion exchange resins, vacuum pump oil, plastics, rags	Hydrogen peroxide	Reactor effluent (liquids, gases, salts)	Liberated gases Liquid salts, acids Solid oxides, carbonates, sulfates,	D007, D008, *D008, D009, D019, D021, D022, D039, F002, F003	M-001 M-034
AX	Solution Assay	Nitric and hydrochloric acid solutions with plutonium	Hydrochloric acid Nitric acid	Plutonium chloride solutions to P/S CX Plutonium nitrate solution to P/S RR	Nitric and hydrochloric acid solutions	D007, *D008, D009	M-005

P/S Code	P/S Title	Process Inputs		Process Outputs		EPA Codes[2]	References[3]
		Feed Stream(s)	Chemicals/Reagents	Product	Waste Stream[1]		
CK	RD&D Volatile Fluoride Plutonium Recovery	Solid residues of PuO_2	1-propanol (as coolant) Aluminum oxide Fluorine gas FOOF Liquid nitrogen Oxygen Sodium bicarbonate Trichloroethylene	Plutonium hexafluoride, unreacted ash	Spent aluminum oxide and sodium bicarbonate, organic reagents and solvents, debris	D005, D006, D007, D008, *D008, D009, D011	M-010 M-035
CV	RD&D Experimental Chlorination Processes	Plutonium in various chemical forms; solid PuO_2	Dilute acids/bases (unspecified) Ammonium chloride Carbon tetrachloride Hydrochloric acid Hydroxylamine hydrochloride Nitric acid Perchlorocarbons Potassium hydroxide ^{239}Pu, ^{237}Np, ^{241}Am, $^{235/238}U$, ^{232}Th in various compounds, residues, metal alloys Sodium bicarbonate Tetrachloroethylene Thionyl chloride	Anhydrous plutonium chloride; plutonium hexafluoride	Spent solvents and reagents, spent sodium bicarbonate, inorganic salts, debris	D005, D006, D007, D008, *D008, D009, D011, D019, D039	M-027 M-035
EDC	Electrolytic Decontamination	Disassembled weapons components	Alkaline solutions Sodium nitrate Sodium sulfate	Decontaminated components	Evaporated uranyl hydroxide and uranyl sulfate, electrolytes (inert, nonhazardous salts), precipitated solids, spent caustic rinses, debris	D007, *D008, D009	M-014 M-041
EOC	Experimental Oxide Characterization	Plutonium oxide (high-purity)	Purified nitrogen and helium Liquid nitrogen	Plutonium oxide	Debris	D007, *D008, D009	M-015 M-040

P/S Code	P/S Title	Process Inputs		Process Outputs		EPA Codes[2]	References[3]
		Feed Stream(s)	Chemicals/Reagents	Product	Waste Stream[1]		
EXT	Extraction RD&D	Various plutonium-containing matrices, pyrochemical salts	Hydrochloric acid Hydrofluoric acid Nitric acid Potassium hydroxide Sodium hydroxide	Aqueous solutions of plutonium	Spent aqueous and organic solutions, spent pyrochemical salts, debris	D005, D006, D007, D008, *D008, D009, D011	M-013
FDL	FOOF Demonstration Loop	Solid residues of PuO_2 and PuF_4	Aluminum oxide Carbon tetrafluoride Fluorine gas FOOF Krypton fluoride Methane Nitrogen, liquid and gas Oxygen Sodium bicarbonate	Plutonium hexafluoride, unreacted ash	Spent aluminum oxide and sodium bicarbonate, debris	D004, D005, D006, D007, D008, *D008, D009, D010, D011	M-011 M-036
FLU	Fluorination RD&D	Solid PuO_2	Aluminum oxide Ammonium chloride, fluoride, bifluoride Argon Fluorine gas FOOF Hydrochloric acid Krypton fluoride Nitrogen Sodium bicarbonate	Recoverable plutonium	Debris	D004, D005, D006, D007, D008, *D008, D009, D010, D011	M-012 M-035
HRS	High Resolution Spectroscopy	Actinide compounds	Carbon dioxide Fluorine FOOF Liquid nitrogen Nitrogen dioxide Sodium bicarbonate	Gas-phase actinide-containing species (PuF_6, UF_6, NpF_6, AmF_6)	Sodium bicarbonate filter (reactive gas traps), debris	*D008	M-023 M-036

P/S Code	P/S Title	Process Inputs		Process Outputs		EPA Codes[2]	References[3]
		Feed Stream(s)	Chemicals/Reagents	Product	Waste Stream[1]		
IB	Matrix Study of Pyrochemical Salts	Plutonium metal oxides and pyrochemical salts	Acids/bases (unspecified)	Solid pyrochemical salts	Pyrochemical salts, metal oxides, debris	D005, D006, D007, D008, D009, D011, *D008	M-030 M-039
ICP	Inductively Coupled Plasma Atomic Emissions Spectroscopy (ICP-AES) Analysis	Plutonium and americium solutions	Unspecified (process related to ACL)	None	Unused liquid samples, analytical laboratory debris, actinide oxides and metals, MSE salts, ash	D007, *D008, D009	M-042
IE	Isotope Enrichment	Solid PuO_2	High purity inputs	Plutonium hexafluoride	Debris	*D008	M-035
LI	XF6 Experimental Measurements	Solid PuO_2	Unknown	Plutonium hexafluoride	Debris	D005, D006, D007, D008, D009, D011, *D008	M-035
LIBS	Laser-Induced Breakdown Spectroscopy System	High purity plutonium metals/oxides	Unknown		Used samples, debris		M-047
ME	Metallography	Plutonium/uranium carbides, nitrides, oxides, zirconium and tantalum alloys, stainless steel	Acetone Acid/caustic etchants (unspecified) Ethanol Kerosene Trichloroethylene		Grinding paper, polishing compounds (including liquid organic and caustic etchants), metal and ceramic powders, debris	D007, *D008, D040, F003	M-048
NCD	Nonconfirming Drums	NA	NA	NA	NA, no waste generated from this activity		M-046

P/S Code	P/S Title	Process Inputs		Process Outputs		EPA Codes[2]	References[3]
		Feed Stream(s)	Chemicals/Reagents	Product	Waste Stream[1]		
RASS/ RSS	RAMAN Spectroscopy System	Solids or solutions with plutonium	Dilute acids (unspecified)	None	Used samples, debris	D004, D005, D006, D007, D008, *D008, D009, D010, D011, D019	M-043
RD	Repackaging into Retrievable Drums	NA	NA	NA	NA	*D008	M-046
SA	Super Acid RD&D	Various actinide compounds and matrices; actinide (Np, Pu, Th, Am, Cm, U) metals	Aluminum oxide Antimony pentafluoride Benzene Bromine Diethyl ether Hydrofluoric acid Inorganic reagents (such as $NaN0_3$) Iodine Magnesium oxide Methylene chloride Organic reagents (such as CMPO) Pyridine Sulfuric acid Hydrocarbon, ethereal, and aromatic solvents (unspecified) Tetrahydrofuran Toluene	Superacid solutions and evaporated solid superacid complexes; solvated halide complexes yielding homoleptic alkyl complexes	Spent aqueous and organic solvents and reagents, organometallic and inorganic compound residues, debris	D007, D008, *D008, D009, D018, D038, F002, F003, F005	M-004 M-024 M-037
SMP	SP Mounting Preparation	NA	NA	NA	NA		M-044

P/S Code	P/S Title	Process Inputs		Process Outputs		EPA Codes[2]	References[3]
		Feed Stream(s)	Chemicals/Reagents	Product	Waste Stream[1]		
SO	Super Oxidizer-FOOF Program	Ash samples with plutonium residues of PuO_2 and PuF_4	Aluminum oxide Bromine and chlorine fluorides Fluorine gas Nitrogen, liquid and gas Methanol Oxygen Dioxygen difluorides (FOOF, FOO) Sodium bicarbonate	Plutonium hexafluoride, unreacted ash	Spent aluminum oxide and sodium bicarbonate, debris	D004, D005, D006, D007, D008, *D008, D009, D010, D011	M-007 M-008 M-009 M-035
STF	Standard Fabrication	High purity plutonium oxides	Unknown	High purity plutonium standards	Stainless steel cans with metal oxides, debris	D007, *D008	M-029 M-039
VS	Confirmation, Inspection, and Sampling	Plutonium oxides and metals	NA – physical inspection only	Unchanged from process input	Vials (only if input material was sampled), debris	*D008	M-045
WM	Waste Management	Waste from the TRU solid waste management operation in Room 432. Glovebox maintenance items. "Hot" room trash (i.e., anything not originating in a glovebox).	NA	None	Miscellaneous waste items from room trash or generated by various P/S codes; leaded gloves and glovebox windows	Default HWNs (see Table 5): D007, D008, *D008, D009, D022, D035, D040, F001, F002, F005	M-046, M-050

P/S Code	P/S Title	Process Inputs		Process Outputs		EPA Codes[2]	References[3]
		Feed Stream(s)	Chemicals/Reagents	Product	Waste Stream[1]		
X0	Inactive or Unspecified P/S Material	Waste materials from common areas (e.g., hallway, change rooms, basement) that could not be associated with a specific room	NA	None	Miscellaneous trash and debris	Default HWNs (see Table 5): D007, D008, *D008, D009, D022, D035, D040, F001, F002, F005	M-046, M-050
XES	X-Ray Energy Spectroscopy	Solid plutonium samples	Acid/base solutions (unspecified)	None	Unused/spent solid plutonium samples, spent acid/base solutions from sample preparation	D004, D005, D006, D007, D008, *D008, D009, D010, D011	M-042
XO	Inactive or Unspecified P/S Material	Waste materials generated within specific rooms but not associated with a specific P/S code; room trash boxes	Chloroform Citrapeel Ethanol Hexane Isopropyl alcohol Methylene chloride Methyl ethyl ketone Organicstrip Trichloroethylene 1,1,2-trichloro-1,2,2-trifluoroethane [freon]	None	Rags contaminated with organic chemicals; other room trash and debris	Default HWNs (see Table 5): D007, D008, *D008, D009, D022, D035, D040, F001, F002, F005	M-046, M-050

P/S Code	P/S Title	Process Inputs		Process Outputs		EPA Codes[2]	References[3]
		Feed Stream(s)	Chemicals/Reagents	Product	Waste Stream[1]		
XP	RD&D Experimental Processes	PuO_2, PuO_2 with tantalum chips, MSE salts, ash (Pu/Th O_2), NpO_2	CMPO DHDCMP Diisopropyl benzene Fluorinating agents (such as HF, F_2, FOOF) Phosphine oxide Potassium chloride Sodium chloride	Plutonium hexafluoride, chlorinated plutonium compounds, neptunium standards	lead shielding, actinide oxides, metals, MSE salts, ash, debris	D004, D005, D006, D007, D008, *D008, D009, D010, D011	M-049

[1]All P/S codes generate routine laboratory debris waste consisting of glassware, plastics, ceramic materials, paper, rags, HEPA filters, metal containers, brushes, and small tools. Leaded gloves may also be generated and are segregated.

[2] See discussion in Section 4.0 for details on the applicability of the EPA Hazardous Waste Numbers (HWNs) listed in this column. The HWNs listed apply to the solid TRU waste only and not to any other waste forms that may undergo further treatment or processing (e.g., evaporation or cement fixation). The resulting treated waste stream is evaluated for hazardous waste constituents and assigned the applicable HWN. All P/S codes have the potential to generate leaded gloves. The gloves are segregated from other metal debris waste and are assigned the HWN D008 under the originating P/S code.

[3] Refer to the Acceptable Knowledge Roadmap in Attachment 1. References listed as M-*nnn* (where *nn* is a 1- to 3-digit number) are in TWCP-3546.

* D008 due to leaded gloves

SIMPLIFIED PROCESS FLOW DIAGRAM

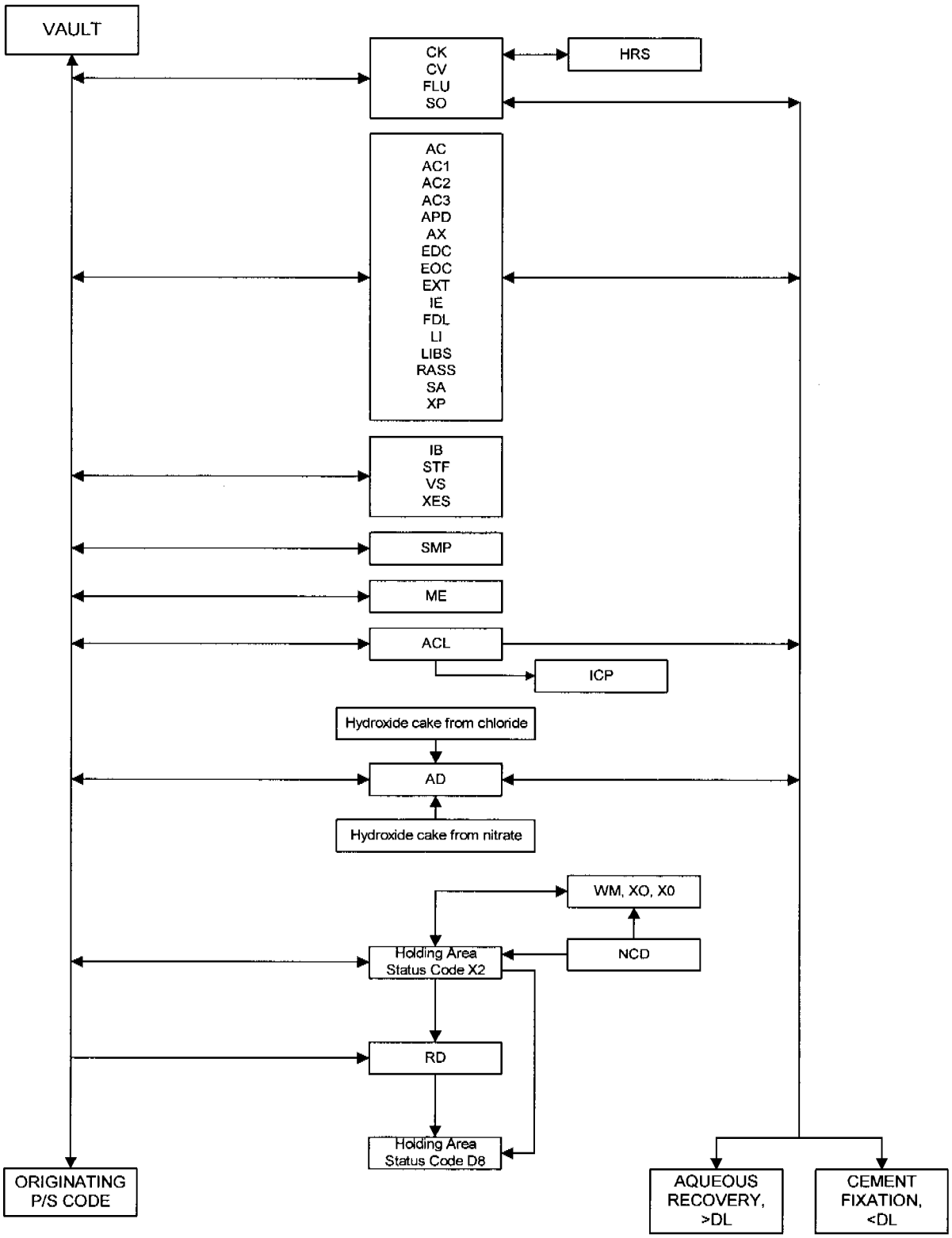

Decision/Discrepancy Resolution Documentation
TA-55 Miscellaneous Operations

Item Identification*	AK No. 1	Source No. 1	AK No. 2	Source No. 2	Decision/Discrepancy	Rationale**
AD	No lead in the process per Gordon Jarvinen	TWCP-3546/M-034	Hydroxide cake samples can contain Cr, Pb, and Cd	TWCP-3546/M-053	Process report does assign D008 to AD	B
EDC	Possible Cr in stainless steel per Jim Foxx. He provides analytical data to support Cr	TWCP-3546/M-031 TWCP-3546/M-053	Reams of analytical data to support RCRA metals below regulatory thresholds per Doug Wedman	TWCP-3546/M-041	Process report assigns D007 as a conservative decision. Does not mention M-053 information.	B—Report needs to be modified to change "sand and slag" to "stainless steel".
General	All TA-55 waste is defense	TWCP-614	Defense and non-defense were commingled until 8/21/97.	TWCP-887	Reported as commingled process in the report	B
			Segregation began in 1997-1998	TWCP-4162	Reported as commingled process in the report	B
			Segregation began in 1998	TWCP-4167	Supporting memos attached to this record	C—Memo dated 8/27/98 states segregation was begun. See attached meeting notes. TWCP-4167.

Sandy Wander — Evaluator (Print Name)
AK Investigator — Title
Sandy Wander — Signature
2/25/02 — Date

P Rogers — SPM Review (Print Name)
Pamela Rogers — Signature
2/26/02 — Date

* Item identification can be PS Code, waste stream, drum ID, item ID, or other identification of items affected.
** Rationale code: [A=Professional Judgment; B=Most Conservative Decision; C=Other(Specify)]

Source: TWCP-07905

TWCP/WRR
Document Modification/Review Cycle

Step 7: Preparation for Document Control

☐ Revision
☒ Interim Change

Document ID: TWCP-AK-2.1-004 New Rev/IC: R.2/IC2

Preparer: Sandy Wander

Document Title:
Process Acceptable Knowledge Report for Miscellaneous Operations at TA-55

Blank entries are Not Applicable items.

☒ Proc
☒ Proc
☒ Proc
☒ Pagi
☒ Doc
☒ Atta
☐ Haz
☒ Effective/Review Date/LAUR# on cover page
☐ Copy of final to Training/Signature Copies

AK-004/IC3 Effective date 3/21/02 –
Posted to web on 3/27/02
Pending response from CBFO
Per Jim Bailey

RMDC
3/27/02

☒ Signatures and Dates typed on cover page
Revision History table reflect changes and effective date
Forms have been marked as SAMPLE, if applicable
Forms extracted for Web publishing
Electronic files archived
Diskette Prepared for Document Control
☒ Document Control packet contains signed original, diskette, DRR/Redline, review documentation

Document Tracking Closed ○ Open ◉ Closed Date to DC: 3/27/2002 Signed Initials: JB

Step 8: Document Control - Tracking and Web Conversion

Date Received: 3/27/02

☑ Verify Signatures
☑ Verify Effective Date cover/history
☑ Verify IC added to document (if applicable)
☑ Log into Database/Make Assignment
☑ Print Receipts/Cover sheets

☑ Copy document: 2
☑ Control Stations Updated - Date: 3/27/02
☑ Master Index Updated - Date: 3/27/02
☑ N/A Archive old revision (Record)

☑ Capture Document: __ Word ✓ PDF
☑ Forms: __ Yes ✓ No
☑ Transfer to Web Server
☑ Quality check to Original
☑ Verify Signatures ✓ Signature Dates ✓
☑ Dates: ✓ Cover ✓ Rev. History ✓ Review Date

☑ Web Page TOC: ✓ No/Rev ✓ Effective Date ✓ LAUR ✓ Title ✓ Link ✓ Test
☑ On-line test: ✓ Open Doc
☑ Electronic Notification: ✓ Sent ✓ Printed
☑ N/A CBFO: __ Electronic Copy __ Printed
☐ Change Control Notification
__ Sent __ Printed ✓ NA

Date Completed: [signature] Signed Initials: 3/27/02

If pages are separated match to Document: TWCP-AK-2.1-004

TWCP/WRR
Document Modification/Review Cycle

Step 1: Receipt of Document

Status: ○ Open ◉ Closed ☐ Revision ☒ Interim Change

Date Received: 3/21/2002

Current Rev/IC: R.2/IC1

Document ID: TWCP-AK-2.1-004

Rev/IC: R.2/IC2

Document Title:
Process Acceptable Knowledge Report for Miscellaneous Operations at TA-55

Preparer: Sandy Wander

Date to DP Team: 3/21/2002

Step 2: Modification Cycle

Technical Reviewer:
(QA and Preparer)

Release for Review:

Comments:
03/27/02: Prepared for transmittal to Document Control

Step 3: Preliminary Review Cycle

☒ IC - Not Applicable (enter action in comments section)

Reviewer	Name	Sent Out	Returned	Comments

Comments:

TWCP/WRR
Document Modification/Review Cycle

Step 4: Comment Reconciliation Cycle

☒ IC - Not Applicable (enter action in comments section)

Reviewer Comments Incorporated:

Redline/DRR Given to Preparer:

Reconciled Comments Returned:

Modifications Made to Document:

Preparer Review of Modifications:

Signed/Release for Final Signature:

Comments:

Step 5: Final Signature Cycle

☒ IC - Not Applicable (enter action in comments section)

Signature	Position	Sent Out	Returned	Comments

Comments:

Step 6: External Review Cycle

Organization	Contact	Sent Out	Returned	Comments
Change Control	G M Polley	3/21/2002	3/25/2002	NA

Comments

LOS ALAMOS
NATIONAL LABORATORY - TWCP RMDC

Controlled Document
Acknowledgment

Failure to return receipt by response date may result in removal from Distribution and/or placement on Supervised Work Activities for reciepients who are overseeing or performing work to this document.

Please Sign, Fold, and Return this Form

To: TWCP RMDC **Mail Stop: M 319** **Please Respond 4/10/2002**

TWCP-AK-2.1-004,R.2/IC2

Effective Date 3-21-2002 **Doc_Source** TWCP **Doc_Status** FINAL **Entry No**

Document Title PROCESS ACCEPTABLE KNOWLEDGE REPORT FOR MISCELLANEOUS OPERATIONS AT TA-55 (LA-UR-02-1714)

Document Comments

Work Stations	ID_No	Name	MS	Organization	Copy
☒ RMDC	N/A	?	?	?	
☐ WCRRF					
☐ RAMROD					
☐ RANT					
☐ DECON					
☒ QA					

Action Required:
Please sign receipt and return to **RMDC, M 319**. My Signature on this Form verifies that I have Received this Document.

___ Please remove me from the Controlled Distribution List. Since the contents of this document does not apply to our operation the document is being returned. (Not applicable for Controlled Stations)

To be signed by the Controlled Document Recipient or their designee.

Signature: [illegible] Date: 3/27/02

To: rubyannf@lanl.gov, mlgarcia@lanl.gov
From: Patricia G Patton <pgp@lanl.gov>
Subject: Procedure Notification
Cc: fabi,bailey, lpc
Bcc:
Attached:

The following are revised AK reports.

Effective Date: 3/21/02

TWCP-AK-2.1-004,R.2/IC1 - Process Acceptable Knowledge Report for Miscellaneous Operations at TA-55 (LA-UR-02-1714)

TWCP-AK-2.1-005,R.2/IC1 - Process Acceptable Knowledge Report for Nitrate Operations at TA-55 (LA-UR-02-1715)

TWCP-AK-2.1-006,R.2/IC1 - Process Acceptable Knowledge Report for Pyrochemical Processes at TA-55 (LA-UR-02-1713)

TWCP-AK-2.1-007,R.2/IC1 - Process Acceptable Knowledge Report for Special Processing at TA-55 (LA-UR-02-1712)

TWCP-AK-2.1-009,R.0/IC1 - Process Acceptable Knowledge Report for Plutonium-238 Operations at TA-55 (LA-UR-02-1709)

~~~~**~~**~~**~~**~~**~~**~~**~~**

Patricia G. Patton
Los Alamos National Laboratory
E-ET / TWCP
Records Management / Document Control
(RMDC)
557 Oppenheimer
TA-00 / bldg 764
MS M319
Phone: (505) 667-2071
Email: pgp@lanl.gov

~~~~**~~**~~**~~**~~**~~**~~**~~**

TWCP/WRR
Document Modification/Review Cycle

Step 7: Preparation for Document Control

☐ Revision
☒ Interim Change

Document ID: TWCP-AK-2.1-004 New Rev/IC: R.2/IC1

Preparer: John Musgrave

Document Title:
Process Acceptable Knowledge Summary Report for Miscellaneous Operations at TA-55

Blank entries are Not Applicable items.

- ☒ Procedure number verified
- ☒ Procedure Title verified
- ☒ Procedure Revision/IC verified
- ☒ Pagination verified
- ☒ Document Header verified
- ☐ Attachment Header verified
- ☐ Hazard Summary verified (if applicable)
- ☒ Effective/Review Date/LAUR# on cover page
- ☐ Copy of final to Training/Signature Copies
- ☐ Signatures and Dates typed on cover page
- ☒ Revision History table reflect changes and effective date
- ☐ Forms have been marked as SAMPLE
- ☐ Forms extracted for Web publishing
- ☒ Electronic files archived
- ☒ Diskette Prepared for Document Control
- ☒ Document Control packet contains signed original, diskette, DRR/Redline, review documentation

Document Tracking Closed ○ Open ◉ Closed Date to DC: 6/15/2001 Signed Initials: JJS

Step 8: Document Control - Tracking and Web Conversion

Date Received: 6/15/01

- ☑ Verify Signatures
- ☑ Verify Effective Date cover/history
- ☑ Verify IC added to document (if applicable)
- ☑ Log into Database/Make Assignment
- ☑ Print Receipts/Cover sheets
- ☑ Copy document: 1
- ☑ Control Stations Updated - Date: 6/18/01
- ☑ Master Index Updated - Date: _____
- N/A Archive old revision (Record)

- ☑ Capture Document: ✓ Word __ PDF
- ☑ Forms: __ Yes ✓ No
- ☑ Transfer to Web Server
- ☑ Quality check to Original
- ☑ Verify Signatures ✓ Signature Dates ✓
- ☑ Dates: ✓ Cover ✓ Rev. History ✓ Review Date
- N/A Add: Controlled Document Original Signatures on File at the RMDC
- N/A Security Set for: ____ Read Only
- ☑ Web Page TOC: ✓ No/Rev ✓ Effective Date N/A LAUR ✓ Title ✓ Link ✓ Test
- ☑ On-line test: ✓ Open Doc N/A Password
- ☑ Electronic Notification: ✓ Sent ✓ Printed
- N/A CAO: ✓ Electronic Copy ✓ Printed

Date Completed: 6/18/01 Signed Initials: [illegible]

TWCP/WRR
Document Modification/Review Cycle

Step 1: Receipt of Document

Status: ○ Open ◉ Closed ☐ Revision ☒ Interim Change

Date Received: 6/13/2001

Current Rev/IC: R.2

Document ID: TWCP-AK-2.1-004

Rev/IC: R.2/IC1

Document Title:
Process Acceptable Knowledge Summary Report for Miscellaneous Operations at TA-55

Preparer: John Musgrave

Date to DP Team: 6/13/2001

Step 2: Modification Cycle

Technical Reviewer:
(QA and Preparer)

Release for Review:

Comments:
06/13/01: Made changes in document and routed for signatures. Originally, M. Gavett indicated IC needed to go to CBFO for review, but L. Souza emailed document production with the comment that no AK document needed to go to CBFO for review.

Step 3: Preliminary Review Cycle

☒ IC - Not Applicable (enter action in comments section)

Reviewer	Name	Sent Out	Returned	Comments

Comments:

TWCP/WRR
Document Modification/Review Cycle

Step 4: Comment Reconciliation Cycle

☒ IC - Not Applicable (enter action in comments section)

Reviewer Comments Incorporated: .....

Redline/DRR Given to Preparer: .....

Reconciled Comments Returned: .....

Modifications Made to Document: .....

Preparer Review of Modifications: .....

Signed/Release for Final Signature: .....

Comments: .....

Step 5: Final Signature Cycle

☒ IC - Not Applicable (enter action in comments section)

Signature	Position	Sent Out	Returned	Comments

Comments:

Step 6: External Review Cycle

Organization	Contact	Sent Out	Returned	Comments

Comments

To: rubyannf@lanl.gov, mlgarcia@lanl.gov
From: Patricia G Patton <pgp@lanl.gov>
Subject: For Training Distribution
Cc: fabi@lanl.gov
Bcc:
Attached:

The following is a revised AK Report:

TWCP-AK-2.1-004,R.2/IC1 - Process Acceptable Knowledge Summary Report for Miscellaneous Operations at TA-55

To: wipp.notify@wipp.carlsbad.nm.us
From: Patricia G Patton <pgp@lanl.gov>
Subject: [Procedure]
Cc: Tammy.Bowden@wipp.carlsbad.nm.us
Bcc: fl@lanl.gov
Attached: K:\twcp\RMDC\AK\TWCP-AK-2.1-004\TWCP-AK-2^1-004R2IC1.pdf;

The following are revised AK Reports.

TWCP-AK-2.1-004,R.2/IC1 - Process Acceptable Knowledge Summary Report for Miscellaneous Operations at TA-55

TWCP/WRR
Document Modification/Review Cycle

Step 7: Preparation for Document Control

☒ Revision
☐ Interim Change

Document ID: TWCP-AK-2.1-004 New Rev/IC: R.2

Preparer: John Musgrave

Document Title:
Process Acceptable Knowledge Summary Report for Miscellaneous Operations at TA-55

Blank entries are Not Applicable items.

- ☒ Procedure number verified
- ☒ Procedure Title verified
- ☒ Procedure Revision/IC verified
- ☒ Pagination verified
- ☒ Document Header verified
- ☒ Attachment Header verified
- ☐ Hazard Summary verified (if applicable)
- ☒ Effective/Review Date/LAUR# on cover page
- ☐ Copy of final to Training/Signature Copies
- ☒ Signatures and Dates typed on cover page
- ☒ Revision History table reflect changes and effective date
- ☐ Forms have been marked as SAMPLE
- ☐ Forms extracted for Web publishing
- ☒ Electronic files archived
- ☒ Diskette Prepared for Document Control
- ☒ Document Control packet contains signed original, diskette, DRR/Redline, review documentation

Document Tracking Closed ○ Open ◉ Closed Date to DC: 5/17/2001 Signed Initials: JSS

Step 8: Document Control - Tracking and Web Conversion

Date Received: 5/17/01

- ☑ Verify Signatures
- ☑ Verify Effective Date cover/history
- NA Verify IC added to document (if applicable)
- ☑ Log into Database/Make Assignment
- ☑ Print Receipts/Cover sheets
- ☑ Copy document: 1
- ☑ Control Stations Updated - Date: 5/17/01
- ☑ Master Index Updated - Date: 5/17/01
- ☑ Archive old revision (Record)

- ☑ Capture Document: __ Word ✓ PDF
- ☑ Forms: __ Yes ✓ No
- ☑ Transfer to Web Server
- ☑ Quality check to Original
- ☑ Verify Signatures ✓ Signature Dates ✓
- ☑ Dates: ✓ Cover ✓ Rev. History ✓ Review Date
- NA Add: Controlled Document Original Signatures on File at the RMDC
- NA Security Set for: ____ Read Only
- ☑ Web Page TOC: ✓ No/Rev ✓ Effective Date NA LAUR ✓ Title ✓ Link ✓ Test
- ☑ On-line test: ✓ Open Doc NA Password
- ☑ Electronic Notification: ✓ Sent ✓ Printed
- ☑ CAO: ✓ Electronic Copy ✓ Printed

Date Completed: 5/17/01 Signed Initials: JG

TWCP/WRR
Document Modification/Review Cycle

Step 4: Comment Reconciliation Cycle

☐ IC - Not Applicable (enter action in comments section)

Reviewer Comments Incorporated:

Redline/DRR Given to Preparer:

Reconciled Comments Returned:

Modifications Made to Document:

Preparer Review of Modifications:

Signed/Release for Final Signature:

Comments:

Step 5: Final Signature Cycle

☐ IC - Not Applicable (enter action in comments section)

Signature	Position	Sent Out	Returned	Comments
J. Fabryka-Martin	Technical	5/7/2001	5/7/2001	Independent Technical Reviewer/Editor
M. Lin	SPM	5/12/2001	5/12/2001	Site Project Manager
S. Wander	QA	5/14/2001	5/14/2001	Waste Certification Official
M. Gavett	QA	5/14/2001	5/14/2001	Site Project QA Officer
C. Foxx	Fac Mgr	5/7/2001	5/7/2001	Facility Representative

Comments:

Step 6: External Review Cycle

Organization	Contact	Sent Out	Returned	Comments
Classification			5/16/2001	LA-UR-01-2559

Comments

TWCP/WRR
Document Modification/Review Cycle

Step 1: Receipt of Document

Status: ○ Open ◉ Closed

☒ Revision
☐ Interim Change

Date Received: 4/1/2001

Current Rev/IC: R.1

Document ID: TWCP-AK-2.1-004

Rev/IC: R.2

Document Title:
Process Acceptable Knowledge Summary Report for Miscellaneous Operations at TA-55

Preparer: John Musgrave

Date to DP Team: 4/1/2001

Step 2: Modification Cycle

Technical Reviewer:
(QA and Preparer)

Release for Review:

Comments:
04/01/01 through 05/16/01: Incorporated changes from author, reviewers, and auditors

Step 3: Preliminary Review Cycle

☐ IC - Not Applicable (enter action in comments section)

Reviewer	Name	Sent Out	Returned	Comments

Comments:

To: rubyannf@lanl.gov, mlgarcia@lanl.gov, prmtz@lanl.gov
From: Louise Garcia <louise@lanl.gov>
Subject: For Training Distribution
Cc: fl@lanl.gov, manmtz@lanl.gov
Bcc:
Attached:

The following are revised AK Reports.

TWCP-AK-2.1-002,R.2 - Process Acceptable Knowledge Summary Report for Chloride Operations at TA-55

TWCP-AK-2.1-003,R.2 - Process Acceptable Knowledge Summary Report for Metal Operation Processes at TA-55

TWCP-AK-2.1-004,R.2 - Process Acceptable Knowledge Summary Report for Miscellaneous Operations at TA-55

TWCP-AK-2.1-005,R.2 - Process Acceptable Knowledge Summary Report for Nitrate Operations at TA-55

To: wipp.notify@wipp.carlsbad.nm.us
From: Louise Garcia <louise@lanl.gov>
Subject: [Procedure]
Cc: Tammy.Bowden@wipp.carlsbad.nm.us
Bcc: fl@lanl.gov
Attached: K:\twcp\RMDC\AK\TWCP-AK-2.1-002\TWCP-AK-2^1-002R2.pdf; K:\twcp\RMDC\AK\TWCP-AK-2.1-003\TWCP-AK-2^1-003R2.pdf; K:\twcp\RMDC\AK\TWCP-AK-2.1-004\TWCP-AK-2^1-004R2.pdf; K:\twcp\RMDC\AK\TWCP-AK-2.1-005\TWCP-AK-2^1-005R2.pdf;

The following are revised AK Reports.

TWCP-AK-2.1-002,R.2 - Process Acceptable Knowledge Summary Report for Chloride Operations at TA-55

TWCP-AK-2.1-003,R.2 - Process Acceptable Knowledge Summary Report for Metal Operation Processes at TA-55

TWCP-AK-2.1-004,R.2 - Process Acceptable Knowledge Summary Report for Miscellaneous Operations at TA-55

TWCP-AK-2.1-005,R.2 - Process Acceptable Knowledge Summary Report for Nitrate Operations at TA-55

LOS ALAMOS
NATIONAL LABORATORY - TWCP RMDC

Controlled Document Acknowledgment

Failure to return receipt by response date may result in removal from Distribution and/or placement on Supervised Work Activities for reciepients who are overseeing or performing work to this document.

Please Sign, Fold, and Return this Form

To: **CST-7 RMDC** Mail Stop: **E517** Please Respond By: **5/31/2001**

TWCP-AK-2.1-004,R.2

Effective Date 5-17-2001 **Doc_Source** TWCP **Doc_Status** FINAL **Entry No**

Document Title PROCESS ACCEPTABLE KNOWLEDGE SUMMARY REPORT FOR MISCELLANEOUS OPERATIONS AT TA-55

Document Comments

Work Stations	ID_No	Name	MS	Organization	Copy
☒ RMDC	N/A	?	?	?	
☐ WCRRF					
☐ RAMROD					
☐ RANT					
☐ DECON					
☐ QA					

Action Required:

Please sign receipt and return to **RMDC, E517**. My Signature on this Form verifies that I have Received this Document.

___ Please remove me from the Controlled Distribution List. Since the contents of this document does not apply to our operation the document is being returned. (Not applicable for Controlled Stations)

To be signed by the Controlled Document Recipient or their designee.

Signature: [illegible] Date: 5/17/01

TIMELINE FOR TA-55 MISCELLANEOUS PROCESSES

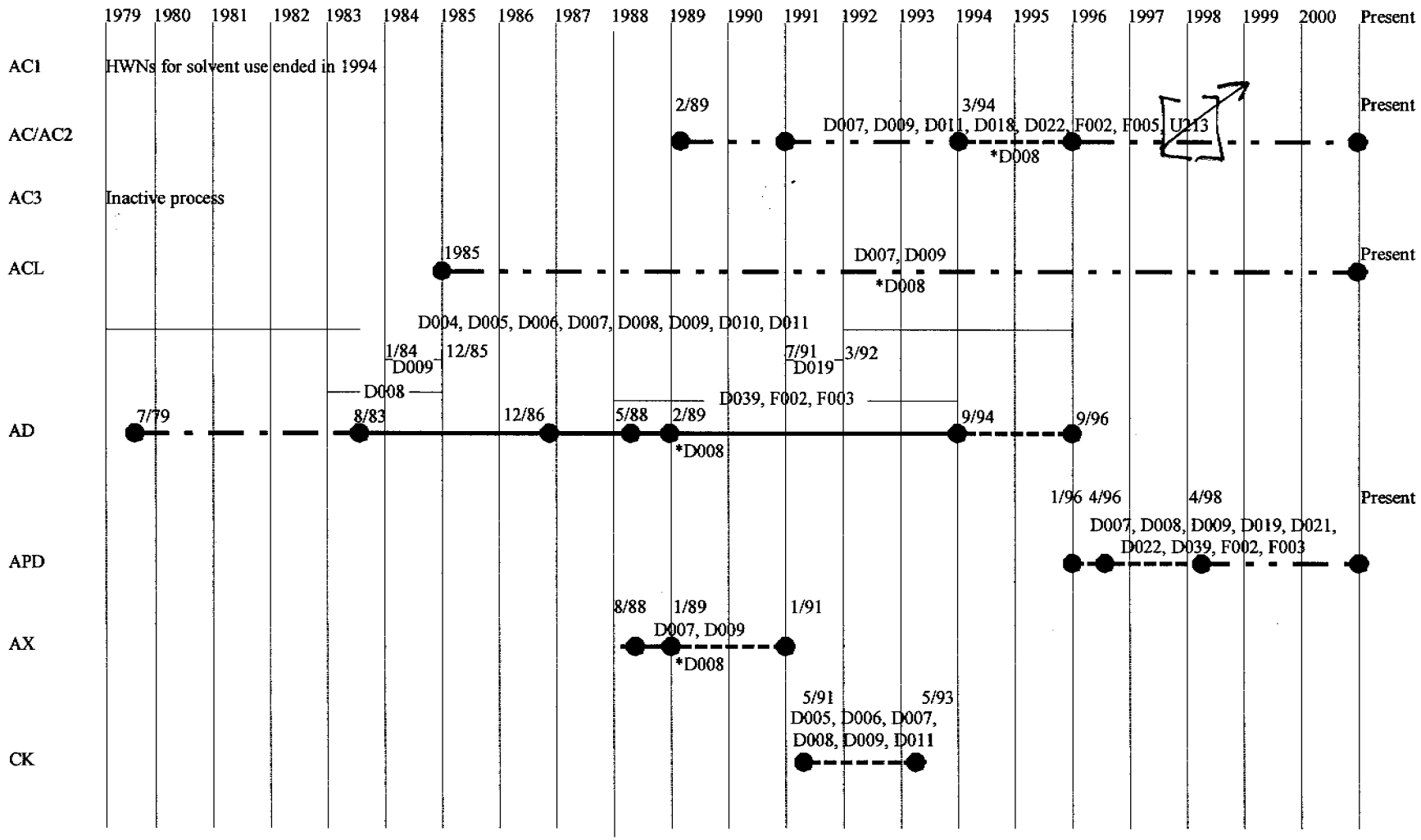

TIMELINE FOR TA-55 MISCELLANEOUS PROCESSES (continued)

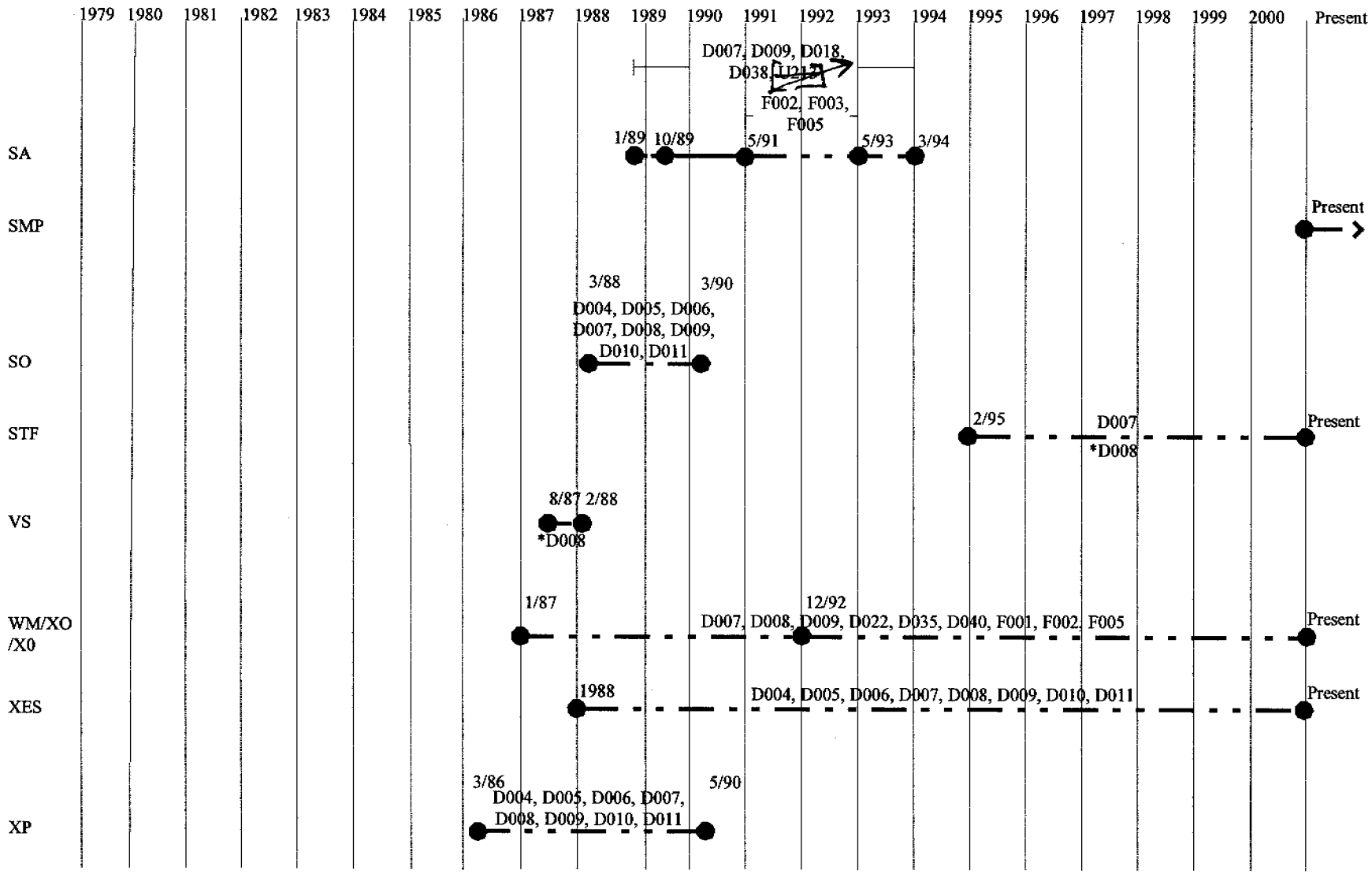

All changes made JTM 5/1/01

TA-55 PLUTONIUM FACILITY
ACCEPTABLE KNOWLEDGE REPORT

REPORT TITLE: Process Acceptable Knowledge Summary Report for Miscellaneous Operations at TA-55

REPORT NUMBER: TWCP-AK-2.1-004,R.1 (LA-UR-00-5865)

WASTE GENERATED FROM PROCESS/STATUS CODES: AC, AC1, AC2, AC3, ACL, AD, APD, AX, CK, CV, EDC, EOC, EXT, FDL, FLU, HRS, IB, ICP, IE, LI, LIBS, ME, NCD, RASS/RSS, RD, SA, SMP, SO, STF, VS, WM, X0, XES, XO, XP

EFFECTIVE DATE: 12/04/00

NEXT REVIEW DATE: 12/04/00

DOCUMENT PREPARER:

John Musgrave	12/04/00
NAME	DATE

APPROVALS:

June Fabryka-Martin	12/04/00
INDEPENDENT TECHNICAL REVIEWER/EDITOR	DATE
Pamela Rogers	12/04/00
SITE PROJECT MANAGER	DATE
Matt J. Riggs	12/04/00
WASTE CERTIFICATION OFFICIAL	DATE
M A Gavett	12/04/00
SITE PROJECT QA OFFICER	DATE
Charles L. Foxx	12/04/00
FACILITY REPRESENTATIVE	DATE

© 2000 University of California

ACRONYMS

AK	acceptable knowledge
CMPO	octylphenyldiisobutylcarbamoylmethylphosphine oxide
D	RCRA hazardous waste code for wastes with hazardous characteristics, defined in 40 CFR Subpart C, Sections 261.21 to 261.24
DBBP	dibutyl butylphosphonate
DHDCMP	dihexyl N,N-diethylcarbamoylmethyl phosphonate
DL	discard limit
DOE	U.S. Department of Energy
DWLS	Discardable Waste Log Sheet
EPA	U.S. Environmental Protection Agency
F	RCRA hazardous waste code for hazardous wastes from non-specific sources, defined in 40 CFR Subpart D, Section 261.31
FOOF	oxygen fluoride global dioxygen difluoride
GB	glovebox
HEPA	high-efficiency particulate air
HWN	[EPA] hazardous waste number
K	RCRA hazardous waste code for hazardous wastes from specific sources, defined in 40 CFR Subpart D, Section 261.32
LANL	Los Alamos National Laboratory
MEGAS	Multiple Energy Gamma Assay System
MSE	molten salt extract
MT	material type
NDA	non-destructive assay
P	RCRA hazardous waste code for acute hazardous waste defined in 40 CFR Subpart D, Section 261.33 (e)
PF-4	Plutonium Facility, Building 4
P/S [code]	process/status [code]
QA	quality assurance
R&D	research and development
RCRA	Resource Conservation and Recovery Act
RD&D	research, development, and demonstration
RFETS	Rocky Flats Environmental Technology Site
RLWTF	Radioactive Liquid Waste Treatment Facility
RMDC	Records Management/Document Control
Sampling Plan	*Los Alamos National Laboratory Transuranic Waste Characterization Sampling Plan* (TWCP-PLAN-0.2.7-001,R.3)
SME	subject matter expert
TA	technical area
TBP	tributyl phosphate
TCLP	Toxicity Characteristic Leaching Procedure
TRU	transuranic
TWCP	Transuranic Waste Characterization Program
UCNI	Unclassified Controlled Nuclear Information
WIPP	Waste Isolation Pilot Plant

U RCRA hazardous waste code for ~~discarded commercial~~ toxic waste defined in 40 CFR Subpart D, Section 261.33 (f)

Rename
Pyrochemical R&D

P/S Code	P/S Name	Process AK Summary Report and Report Section*	
ME	Metallography	Miscellaneous Operations	3.4.10, Att. 4
NCD	Nonconfirming Drums	Miscellaneous Operations	3.4.9, Att. 4
OR	Direct Oxide Reduction	Pyrochemical Processes	3.4.2, Att. 4
PTS	RD&D Pretreatment Study	Nitrate Operations	3.4.1, 3.4.6, Att. 4
PX	Multiple DOR with In-Situ Regeneration and Electrorefining	Special Processing	3.4.6, 3.4.7, 3.4.8, 3.4.9, 3.4.10, Att. 4
RASS/RSS	Raman Spectroscopy System	Miscellaneous Operations	3.4.5, Att. 4
RB	Roasting and Blending	Nitrate Operations	3.4.3, Att. 4
RBJ	Roasting and Blending Jr.	Nitrate Operations	3.4.3, Att. 4
RC	Rotary Calciner	Nitrate Operations	3.4.1, 3.4.6, Att. 4
RD	Repackaging into Retrievable Drums	Miscellaneous Operations	3.4.9, Att. 4
RR	Ion Exchange	Nitrate Operations	3.4.3, Att. 4
SA	Super Acid RD&D	Miscellaneous Operations	3.4.3, Att. 4
SMP	SP Mounting Preparation	Miscellaneous Operations	3.4.5, Att. 4
SO	Super Oxidizer, FOOF Program	Miscellaneous Operations	3.4.2, Att. 4
SS	Salt Stripping	Pyrochemical Processing	3.4.3, 3.4.4, 3.4.5, 3.4.7, 3.4.8, Att. 4
STF	Standard Fabrication	Miscellaneous Operations	3.4.6, Att. 4
VS	Confirmation, Inspection & Sampling	Miscellaneous Operations	3.4.5, Att. 4
WM	Waste Management	Miscellaneous Operations	3.4.9, Att. 4
X0	Inactive or Unspecified P/S Material	Miscellaneous Operations	3.4.9, Att. 4
XES	X-Ray Energy Spectroscopy	Miscellaneous Operations	3.4.5, Att. 4
XO	Inactive or Unspecified P/S Material	Miscellaneous Operations	3.4.9, Att. 4
XP	RD&D Experimental Processes	Miscellaneous Operations	3.4.4, Att. 4

* Process AK summary reports: Chloride Operations (TWCP-AK-2.1-002,R.1), Miscellaneous Operations (this report), Nitrate Operations (TWCP-AK-2.1-005,R.1), Pyrochemical Processes (TWCP-AK-2.1-006,R.1), and Special Processing (TWCP-AK-2.1-007,R.1)

PROCESS ACCEPTABLE KNOWLEDGE SUMMARY

Waste-generating process: Miscellaneous Operations

P/S codes:

AC, AC1, AC2, AC3, ACL, AD, APD, AX, CK, CV, EDC, EOC, EXT, FDL, FLU, HRS, IB, ICP, IE, LI, LIBS, ME, NCD, RASS/RSS, RD, SA, SMP, SO, STF, VS, WM, X0, XES, XO, XP

Type of waste generated:

Retrievably stored and newly generated, mixed and non-mixed, combustible and non-combustible debris; liquid wastes sent to the Radioactive Liquid Waste Treatment Facility at TA-50 or immobilized in cement (as part of nitrate operations)

Site: LANL

Facility Mission (including defense and non-defense programs):

TA-55 has extensive capabilities for the extraction and recovery of plutonium from residues and scraps generated from operations at various LANL facilities and other DOE sites in the defense complex. The recovered plutonium is converted into pure plutonium feedstock. These manufacturing and recovery operations, associated maintenance operations, and TA-55 plutonium research are the sources of TRU waste contaminated scrap, residues, and debris generated at TA-55. The scrap and residues are processed to recover as much plutonium as practicable before disposal. Wastes from miscellaneous operations are generated from plutonium recovery and purification for defense and non-defense programs; these wastes are generated and produced in the same rooms and gloveboxes and so were not segregated until August 27, 1998.

Area(s) or building(s) where the process waste was generated (including operations carried out in those areas):

TA-55 Plutonium Facility (Building PF-4), Rooms 105, 106, 112, 113, 115, 120, 124, 126, 208, 209, 210, 401, 409, 420, and 432

Description of the process waste (physical form and typical content description):

Primarily debris waste, including cellulosic materials, plastic, rubber, ceramic, metal and glass debris, and waste sent to nitrate operations to be immobilized in cement.

Description of the waste-generating process:

The overall goal of the miscellaneous operations is to recover plutonium from metal, metal alloys, scrap, and residues and produce a purified plutonium oxide product or feedstock for conversion to metal. Processes in miscellaneous operations include pretreatment, dissolution, purification, and hydroxide precipitation.

rewrite

Process feed:

Plutonium metal or metal alloy, oxides and hydroxide cakes; pyrochemical salts; ~~crucible pieces;~~ anode heels; ash; ~~analytical laboratory solutions;~~ and residues from other DOE facilities.

Radioisotopic content of the waste:

Variety of plutonium material types with different well-defined isotopic compositions; americium-241, neptunium-237, and uranium-234 may be present at detectable concentrations as decay products of their plutonium precursors. Some of the processes separate plutonium and americium or plutonium and uranium. The waste will usually be enriched in americium and uranium, but may also be depleted in some cases.

RCRA Constituents/EPA Hazardous Waste Numbers:

- No K or P codes
- F001: P/S codes WM, XO, X0 (trichloroethylene and 1,1,2-trichloro-1,2,2-trifluoroethane (freon))
- F002: P/S codes AC/AC1/AC2, AD, APD, SA, WM, X0, XO (chlorobenzene, methylene chloride, tetrachloroethylene, trichloroethylene)
- F003: AD, APD, ME, SA (acetone, diethyl ether, methanol, xylene)
- F005: P/S codes AC/AC1/AC2, SA, WM, X0, XO (benzene, methyl ethyl ketone, toluene, pyridine)
- D004 (arsenic) and D010 (selenium): P/S codes AD, FDL, FLU, RASS/RSS, SO, XES, SP
- D005 (barium) and D006 (cadmium): P/S codes AD, CK, CV, EXT, FDL, FLU, IB, IE, LI, RASS/RSS, SO, XES, XP, SO
- D007 (chromium) and D009 (mercury): P/S codes AC, AC1, AC2, ACL, AD, APD, AX, CK, CV, EDC (D007 only), EOC, EXT, FDL, FLU, HRS, IB, ICP, IE, LI, ME (D007 only), RASS/RSS, RD, SA, SO, STF (D007 only), VS, WM, X0, XES, XO, XP
- D008 (lead, excluding leaded gloves): P/S codes AD, APD, CK, CV, EXT, FDL, FLU, IB, IE, LI, RASS/RSS, SO, WM, X0, XES, XO, XP
- D008 (leaded gloves only): P/S codes AC, AC1, AC2, ACL, AD, APD, AX, CK, CV, EDC, EOC, EXT, FDL, FLU, HRS, IB, ICP, IE, LI, ME, RASS/RSS, RD, SA, SO, STF, VS, WM, X0, XES, XO, XP
- D010 (selenium): P/S codes FDL, FLU, RASS/RSS, AD, XP, XES, SO ← put codes in alphabetical order
- D011 (silver): P/S codes AD, APD, CK, CV, EXT, FDL, FLU, IB, IE, LI, RASS/RSS, SO, XES, XP
- D018 (benzene): P/S codes AC, AC1, AC2, SA
- D019 (carbon tetrachloride): P/S codes AD, APD, CV, RASS/RSS
- D021 (chlorobenzene): P/S code APD
- D022 (chloroform): P/S codes AC, AC1, AC2, APD, WM, X0, XO

- D035 (methyl ethyl ketone): P/S codes WM, X0, XO
- D038 (pyridine): P/S code SA
- D039 (tetrachloroethylene): P/S codes AD, APD, CV
- D040 (trichloroethylene): P/S codes ME, WM, X0, XO
- No HWN: P/S codes LIBS, NCD, SMP

Process waste volume (if known):

Waste volumes for each P/S code have not been tracked. Instead, waste items are segregated into similar material types and packaged in waste containers. Waste containers are segregated into waste streams in the Sampling Plan, and waste stream volumes are reported in that document.

Years of generation for the process waste: 1979–present

U213 (tetrahydrofuran): P/S codes AC, AC2, SA

consistent with P/S code SA (M-024, M-037/TWCP-3546). This P/S code covered two separate activities that did not overlap in time. P/S code SA began in 1989 with superacid work, but the process changed approximately in 1991 to organometallic studies. According to the SME, organic compounds (i.e., solvents) were never used with superacid media. Aluminum oxide and magnesium oxide were used to absorb superacid components. These spent oxides were discarded along with contaminated glass. Hazardous constituents are not expected to be present in any of the waste streams from the superacid work.

The study of the organometallic chemistry of uranium and thorium in non-aqueous solvents (as part of P/S code SA) was conducted in Room 208, GB-216 and 230, in 1989 (M-024/TWCP-3546). Chemical reagents and solvents are not specified but the procedure indicates that materials used in the process may include "hydrocarbon, ethereal, and aromatic solvents, organic reagents, and inorganic salts." The procedure was revised in 1991, at which time the operation was conducted in Room 105 (GB-166 and -177) and Room 208 (GB-230 and -240). The process consisted of a variety of small-scale organoactinide operations involving fundamental research of the synthesis in non-aqueous media of new actinide compounds, their characterization and reaction chemistry, and application to existing actinide processing technology. Due to the range of experimental studies conducted under this P/S code, a definitive list of chemical reagents does not exist; however, previous studies involved the use of a wide range of hydrocarbon solvents, including the D-listed and F-listed constituents: methylene chloride (F002), diethyl ether (F003), benzene (D018, F005), toluene (F005), and pyridine (D038, F005). Tetrahydrofuran ~~and toluene~~ were also used in the organometallic process. Neptunium and plutonium metal were put into tetrahydrofuran and dried. Bromine and/or iodine were added to create plutonium iodide, the starting material for other studies. In addition to standard debris wastes, process wastes may have included reaction by-products and residues, various pieces of laboratory equipment, spent organic solvents, and filtration media. Process outputs from this operation may be sent to the vault, returned to the originating P/S code, or transferred to aqueous recovery or cement fixation (based on the discard limit).

HWN (U213)

The procedure associated with the previous operation was revised once again in March 1994. The P/S codes for these operations are indicated as AC, AC1, AC2 and AC3. SMEs (M-038/TWCP-3546) familiar with these activities indicated that the process began as P/S code AC in February 1989 and transformed to P/S code AC2 in February 1994. P/S codes AC2 probably ran concurrently with AC1. This revised procedure indicates that operations occurred in the same rooms and gloveboxes identified in the previous revision. The distinguishing features between

AC1 and AC2 were that AC1 was an analytical process using aqueous compounds, predominantly dilute nitric, hydrochloric, and perchloric acid solutions. These acidic solutions would have been neutralized and precipitated to recover the plutonium. Solids were sent to recovery, and solutions were sent to cementation. P/S code AC2 involved synthesis of (air-sensitive) new compounds in an inert glovebox. This was a non-aqueous process. P/S code AC3 is not related to P/S codes AC1 or AC2, but is predominantly a metal operation (M-038/TWCP-3545). This code had not yet become active by the time this report was prepared, and no other information was available for it.

The procedure describes operations that comprise a broad range of laboratory activities in support of fundamental and applied actinide chemistry research (M-025/TWCP-3546). These activities include, but are not limited to, preparation of solvents and reagents, synthesis of new chemical compounds, and characterization and analysis of new chemical compounds using wet chemistry methods and analytical instrumentation. The chemical list indicates the use of a variety of materials, including organic solvents (e.g., toluene and benzene), alkaline earth metals, and transition metals. The SMEs (M-038/TWCP-3546) familiar with these activities indicated that a "variety of aromatic, alkaline, and chlorinated solvents" (e.g., tetrahydrofuran, toluene, benzene, ~~dimethyl chloride~~, ~~(also known as~~ methylene chloride), and chloroform) were used in these activities. These organic chemicals have the following HWNs: benzene (D018, F005), chloroform (D022), methylene chloride (F002), toluene (F005). The SME stated that waste byproducts from the operations that contain these constituents were not discarded but were held in the glovebox for reprocessing or recovery. Because the SME was not involved with these activities after 1994, he was unable to definitively state how the waste materials were ultimately dispositioned. In a later discussion, other SMEs (M-038/TWCP-3546) indicated that use of the chlorinated solvents associated with P/S code AC1 was discontinued in 1994 and that items contaminated with these constituents mentioned are still in the glovebox and have yet to be discarded as of the date of this report. Transition metals used as reagents in the synthesis of new materials in this process included sodium salts, potassium salts, and silver salts. The precipitated salt byproducts also were not discarded but were held in the glovebox for reprocessing and recovery. In a later discussion, other SMEs confirmed that silver salts associated with P/S code AC1 are still in the glovebox awaiting determination for a path forward for disposition. Other than silver (D011), no RCRA metals were used in the processes (M-038/TWCP-3546). In addition to the standard debris wastes, process wastes may have included reaction by-products and residues, heating mantles, vacuum pump apparatus, various pieces of laboratory equipment, spent organic solvents, and filtration media. Process outputs for both P/S codes may be sent to the vault, returned to

Hexane and acetonitrile began to be used in P/S code AC2 recently. Acetonitrile is an App VIII VOC, but its HWN (U003) does not apply in this case.

and tetrahydrofuran (U213)

- P/S code XO indicated waste materials that were generated within specific rooms but could not be associated with an individual P/S code in that room. The room trash boxes assigned this P/S code, when determined by assay to qualify as TRU waste instead of low-level waste, could contain rags that had contacted ignitable constituents (e.g., ethanol, isopropyl alcohol, and hexane); however, because the waste items were not packaged as free liquids, the EPA HWN D001 for ignitability would not be applicable. Other constituents that may have been present on rags in debris waste from P/S code XO included the degreasing solvents methyl ethyl ~~ketone~~ (D035, F005), trichloroethylene (D040, F001~~), and~~ 1,1,2-trichloro-1,2,2-trifluoroethane [freon] (F001); methylene chloride (F002) used as a paint stripper; and chloroform (D022) used in a cryogenic bath.

XO switched to non-RCRA regulated paint strippers after 1999: Citrapeel until 2001, and Organicstrip at the present time.

Two other specific situations could also result in the generation of additional waste items under P/S code WM.

- During maintenance of the in-line glove box, changeout of the leaded gloves and windows would be covered under P/S code WM. No solvents or other chemicals were introduced during this routine maintenance activity.

- A spill in Room 432 in 1989 involved the release of a Pu-239-contaminated solution (consisting primarily of water with a minor amount of nitric acid) from a ventilation line. The spill was wiped up with rags and discarded under P/S code WM. Rags with excessive amounts of nitric acid would have been neutralized by dipping them in a calcium hydroxide solution inside a glovebox. No EPA HWN would be applicable to waste from this incident.

move to precede 3.4.9

3.4.10 Metallography (P/S Code ME)

P/S code ME takes place in Room 115 and involves a standard metallography process that was initiated at TA-55 in 1979 and continues to the present (M-048/TWCP-3546). The purpose of the metallography operation is to characterize the microstructure of metallic or ceramic pieces to verify and establish the quality and effectiveness of welds. Materials examined under this P/S code consist of plutonium and uranium carbides, nitrides, and oxides, as well as zirconium and tantalum alloys, and stainless steel. Metal pieces (pellets) are cut with a diamond saw. Ceramic pieces are subjected to grinding with standard metal grinding media (e.g., papers impregnated with silicon carbides and diamond). The materials are polished with several different chemical compounds. Prior to May 1992, a mixture of 1–10 percent trichloroethylene and kerosene were used. Ethanol and acetone may also have been used. After May 1992, these materials were replaced with a

Table 1. Process Feed Materials for Miscellaneous Operations

Feed Material	RCRA-Regulated Substances and Associated Hazardous Waste Number	P/S Codes in Miscellaneous Operations
Analytical laboratory solutions	Solutions from other TA-55 operations: no RCRA constituents Solutions from CLS-1: Potentially contaminated with RCRA-regulated heavy metals, mercury (D009) and lead (D008), as well as RCRA-listed organic substances used as solvents, including acetone (F003), butyl alcohol (F003), carbon tetrachloride (D019), chlorobenzene (F002, D021), chloroform (D022), methanol (F003), methylene chloride (F002), tetrachloroethylene (F002, D039), xylene (F003) (reference Cl-25 in TWCP-3547).	ACL and ICP (TA-55 solutions) APD (CLS-1 solutions)
Ash from P/S codes IS, SB, and TDC, or from other DOE sites	Usually suspect contaminated with barium (D005), cadmium (D006), chromium (D007), and lead (D008). Silver (D011), arsenic (D004), mercury (D009), and selenium (D010) may also be present; although volatile at high temperatures if present in the oxide form, these heavy metals may be alloyed to Pu if present in the metal form.	SO, XP, FLU FDL
Disassembled weapons components	High-purity Pu and U material types	EDC
Experimental R&D feed materials; various isotopes and isotopic mixtures of actinides in various matrices	Variable purity	AD, CV, EXT, HRS, ME, RASS/RSS, SA, XES, XP
Hydroxide cakes	Typically contaminated with RCRA-regulated heavy metals cadmium (D006), chromium (D007), mercury (D009), lead (D008), and silver (D011)	AD
MSE salts	Typically fairly pure, suspect contaminated with barium but no other RCRA substances present	XP
Pu chlorides and fluorides (from various P/S codes)	Variable purity	FDL, SO
Pu metal or metal alloy	High purity, no RCRA-regulated substances, unless noted otherwise	AC, AC1, AC2, EXT, LIBS, SA, SMP, VS
Pu oxides	High-purity oxides used for P/S codes EOC, LIBS and STF. Variable purity for other codes, may be contaminated with RCRA-regulated heavy metals barium (D005), cadmium (D006), chromium (D007), and lead (D008), and silver (D011)	CK, CV, EOC, EXT, FDL, FLU, IB, IE, LI, LIBS, SO, STF, VS, XP
Pyrochemical salts	Typically fairly pure, no RCRA-regulated substances other than barium (D005) present	EXT, IB

Table 4. Chemical Inputs to Processes Described in This Report

Chemical input	P/S Codes in which RCRA-Listed Chemicals Are Used	Comments on Applicability of EPA HWN
Gases and Cryogens		
Carbon dioxide (gas) Fluorine (gas) Halogen fluorides Krypton fluoride Methane (gas) Nitrogen dioxide (gas) Nitrogen, liquid	~~CK, FEU, SO~~ ~~SO, FDL~~	D001 and D002 do not apply to these gases because there are no free liquids in this waste. Also the gas cylinders are outside the building, and the gases are plumbed into the glovebox. ~~F003 does not apply because methanol was used as a reducing agent, not as a solvent.~~
Acids		
Hydrochloric acid Hydrofluoric acid Nitric acid Oxalic acid Perchloric acid Sulfuric acid Superacids (e.g., HSO_3F)	AD SA	D002 does not apply to the solid debris waste because there are no free liquids in this waste. D001 (oxidizer) does not apply to the use of nitric or perchloric acid or to the superacids for the same reason.
Bases		
Calcium hydroxide Potassium hydroxide Sodium hydroxide		D002 does not apply to the solid debris waste because there are no free liquids in this waste.
Inorganic Chemicals		
Aluminum bifluoride Aluminum chloride Aluminum fluoride Aluminum nitrate Aluminum oxide Ammonium chloride Antimony pentafluoride Bromine FOOF Hydrogen peroxide Iodine Iron oxide Lead and lead hydroxide, oxide, or nitrate Magnesium oxide Na, K, Li, Mg, Ca, Fe, nitrates, chlorides, carbonates, bicarbonates, oxalate, nitrites Phosphates Potassium choride Potassium dichromate	 AD, APD AD	 D008 D007

Chemical input	P/S Codes in which RCRA-Listed Chemicals Are Used	Comments on Applicability of EPA HWN
Potassium permanganate		
Potassium salt (not specified)		
Silver salt	AC1	D011
Sodium bicarbonate		
Sodium carbonate		
Sodium chloride		
Sodium chlorite		
Sodium nitrate		
Sodium salt (not specified)		
Sodium sulfate		
Thorium oxide		
Metals		
Alkaline earth metals		
Bismuth-tin alloy		
Gallium metal, oxide or salt		
Lanthanide metals		
Platinum and platinum-rhodium alloys		
Stainless steel		D007 (chromium)
Tantalum metal, oxide or salt		
Zirconium and tantalum alloys		
Organic Chemicals		
1-propanol		
Acetone	ME	F003
Alkylating agents (unspecified)		
Benzene	AC/AC1/AC2, SA	D018 and F005: solvent use
Carbon tetrachloride	AD, CV	D019 applies to AD and CV. F001 does not apply because this chemical was not used for degreasing.
Carbon tetrafluoride		
Chloroform	AC/AC1/AC2, APD, XO	D022
DBBP (dibutyl butyl-phosphonate)	Citrapeel	
DBBP (dibutyl butyl-phosphonate) / Isopar (isoparaffinic hydrocarbon solvent)		
Diethyl ether	SA	F003
Dihexyl N,N-diethylcarbamoylmethyl phosphonate (DHDCMP)		
Diisopropyl benzene		
Ethanol		
Hexane		
Hydrazine dihydrochloride		
Hydrazine hydrochloride		
Hydroxylamine chloride		
Hydroxylamine nitrate		
Isopropanol		
Kerosene		
Methanol	AD, SO	F003 applies to AD because methanol may have been used for cleaning inside the glovebox. F003 does not

Acetonitrile (AC2)

App VIII compound use began "recently" U003 does not apply

Acetonitrile AC2 Appendix VIII compound. EPA HWN U003 does not apply to the manner in which this chemical is used in TA-55 processes.

Chemical input	P/S Codes in which RCRA-Listed Chemicals Are Used	Comments on Applicability of EPA HWN
		apply to SO because methanol was used in a cold trap outside the glovebox.
Methylene chloride (also called dichloromethane)	AC1, SA	F002 applies to P/S codes AC1 and SA because methylene chloride was used for solvent properties.
n-dodecane		
Octylphenyldiisobutyl-carbamoylmethylphosphine oxide (CMPO)		
Perchlorocarbons	Organic strip	
Phosphine oxide		
Phosphines		
Pyridine	SA	D038, F005: used as solvent in organometallic synthesis process.
Sodium dithionate		
Tetrachloroethylene	AD, APD, CV	D039 and F002 apply to AD and APD. However no codes apply to CV because this chemical was only used as a coolant outside the glovebox.
Tetraethylamine hydrochloride		
Tetraethylamine hydroxide		
Tetraethylammonium hydroxide		
Tetrahydrofuran	AC, AC2, SA	U213 applies to AC, AC2 and SA
Thionyl chloride		
Toluene	AC, SA AC2,	F005 applies because toluene was used as a solvent in organometallic synthesis
Tributyl phosphate (TBP)		
Tributyl phosphate (TBP)/Isopar		
Trichloroethylene	CK, ME, XO	D040 applies to P/S codes ME and XO; F002 also applies to P/S code XO. Neither EPA HWN applies to P/S code CK because this chemical was used as a coolant outside the glovebox.
Vacuum pump oil		

Table 5. Evaluation of the Applicability of EPA Hazardous Waste Numbers to Processes Discussed in This Report

P/S Code	Description	Potential EPA Hazardous Waste Numbers (HWNs)			Applicable HWNs
		Due to Feed (from Table 1 and text)	Due to Chemical Use (from Table 4)	Due to Process*	
AC	Actinide Chemistry, R&D	None	D011, D018, D022, F002, F005, U213	D007, D008, D009	D007, D008, D009, D011, D018, D022, F002, F005, U213
AC1	Actinide Chemistry, R&D	None	D011, D018, D022, F002, F005	D007, D008, D009	D007, D008, D009, D011, D018, D022, F002, F005
AC2	Actinide Chemistry, R&D	None	D011, D018, D022, F002, F005, U213	D007, D008, D009	D007, D008, D009, D011, D018, D022, F002, F005, U213
AC3	Actinide Chemistry, R&D	None	None	None	None
ACL	Analytical Chemistry Laboratory	None	None	D007, D008, D009	D007, D008, D009
AD	Actinide Processing Demonstration	D004, D005, D006, D007, D008, D009, D010, D011, D019	D008, D019, D039, F002, F003	D007, D008, D009	D004, D005, D006, D007, D008, D009, D010, D011, D019, D039, F002, F003
APD	Actinide Processing Demonstration	D008, D009, D019, D021, D022, D039, F002, F003	None	D007, D008, D009	D007, D008, D009, D019, D021, D022, D039, F002, F003
AX	Solution Assay	None	None	D007, D008, D009	D007, D008, D009
CK	RD&D Volatile Fluoride Pu Recovery	D005, D006, D007, D008, D011	None	D007, D008, D009	D005, D006, D007, D008, D009, D011
CV	R&D Experimental Chlorination Processes	D005, D006, D007, D008, D011	D019, D039	D007, D008, D009	D005, D006, D007, D008, D009, D011, D019, D039
EDC	Electrolytic Decontamination	D007	None	D007, D008	D007, D008
EOC	Experimental Oxide Characterization	None	None	D007, D008, D009	D007, D008, D009
EXT	Extraction RD&D	D005, D006, D007, D008, D011	None	D007, D008, D009	D005, D006, D007, D008, D009, D011
FDL	FOOF Demonstration Loop	D005, D006, D007, D008, D011	None	D007, D008, D009	D005, D006, D007, D008, D009, D011
FLU	Fluorination RD&D	D005, D006, D007, D008, D011	None	D007, D008, D009	D005, D006, D007, D008, D009, D011
HRS	High Resolution Spectroscopy	None	None	D008	D008
IB	Matrix Study Of Pyrochemical Salts	D005, D006, D007, D008, D011	None	D007, D008, D009	D005, D006, D007, D008, D009, D011
ICP	ICP–AES Analysis	None	None	D007, D008, D009	D007, D008, D009

P/S Code	Description	Potential EPA Hazardous Waste Numbers (HWNs)			Applicable HWNs
		Due to Feed (from Table 1 and text)	Due to Chemical Use (from Table 4)	Due to Process*	
IE	Isotope Enrichment	D005, D006, D007, D008, D011	None	D007, D008, D009	D005, D006, D007, D008, D009, D011
LI	XF6 Experimental Measurements	D005, D006, D007, D008, D011	None	D007, D008, D009	D005, D006, D007, D008, D009, D011
LIBS	Laser-Induced Breakdown Spectroscopy System	None	None	None	None
ME	Metallography	None	D040, F003	D007, D008	D007, D008, D040, F003
NCD	Nonconfirming Drums	None	None	None	None
RASS/ RSS	Raman Spectroscopy System	D004, D005, D006, D007, D008, D009, D010, D011, D019	None	D007, D008, D009	D004, D005, D006, D007, D008, D009, D010, D011, D019
RD	Repackaging into Retrievable Drums	None	None	D008	D008
SA	Super Acid RD&D	None	D018, D038, F002, F003, F005, U213	D007, D008, D009	D007, D008, D009, D018, D038, F002, F003, F005, U213
SMP	SP Mounting Preparation	None	None	None	None
SO	Super Oxidizer, FOOF Program	D004, D005, D006, D007, D008, D009, D010, D011	None	D007, D008, D009	D004, D005, D006, D007, D008, D009, D010, D011
STF	Standard Fabrication	None	None	D007, D008	D007, D008
VS	Confirmation, Inspection & Sampling	None	None	D008	D008
WM	Waste Management	~~Must be determined on case-by-case basis~~ ~~None~~ ~~None~~ (sxet)			**D007, D008, ~~D009, D022, D035, D040~~, F001, ~~F002~~, F005 ~~None~~ (sxet)
X0	Inactive or Unspecified P/S Material	Must be determined on case-by-case basis			**D007, D008, D009, D022, D035, D040, F001, F002, F005
XES	X-Ray Energy Spectroscopy	D004, D005, D006, D007, D008, D009, D010, D011	None	D007, D008, D009	D004, D005, D006, D007, D008, D009, D010, D011
XO	Inactive or Unspecified P/S Material	Must be determined on case-by-case basis. However, HWNs known to be applicable include those for chloroform (D022), trichloroethylene (D040, F001, F002), 1,1,2-trichloro-1,2,2-trifluorethane (F002), methylene chloride (F002), and methyl ethyl ketone (D035, F005) because cleaning rags may be contaminated with these RCRA chemicals; also D007, D008, D009			**D007, D008, D009, D022, D035, D040, F001, F002, F005 (F001, F002)

(use ended after 1999)

P/S Code	Description	Potential EPA Hazardous Waste Numbers (HWNs)			Applicable HWNs
		Due to Feed (from Table 1 and text)	Due to Chemical Use (from Table 4)	Due to Process*	
XP	RD&D Experimental Processes	D004, D005, D006, D007, D008, D009, D010, D011	None	D007, D008 (gloves and shielding), D009	D004, D005, D006, D007, D008, D009, D010, D011

* EPA HWNs assigned due to the process itself include chromium (D007) when there is the potential for this metal to be leached from stainless steel equipment or items in the process, lead (D008) when leaded gloves are used in the process, and mercury (D009) when there is a potential for a glass mercury thermometer to have been used in the same glovebox. stet

** P/S codes WM, ~~X0~~, and XO have conservatively been assigned the same cumulative list of EPA HWNs, regardless of information indicating that specific hazardous constituents are not expected in one or more of these P/S codes, because application of these P/S codes to specific waste containers has been inconsistent at TA-55 (M-050/TWCP-3546).

ME F003 (acetone)

SA F002 (methylene chloride), F003 (diethyl ether); F005 (benzene, toluene, pyridine)

stet

WM, XO, ~~X0~~ F001 (trichloroethylene, 1,1,2-trichloro-1,2,2-trifluoroethane (freon)); F002 (methylene chloride, trichloroethylene); F005 (methyl ethyl ketone)

No K or P listings apply to solid wastes generated from any of the miscellaneous operations because no K-listed or P-listed chemicals were present in the feed materials, chemicals, or equipment used in these processes.

4.2 Toxicity Listings

The list below is summarized from Table 5 and lists the EPA HWNs applicable to waste from processes described in this report. P/S codes marked with an asterisk (*) in the list do not contain RCRA-listed constituents in the feed material or in the chemicals used in the process, but have been assigned HWNs due to the potential for chromium (D007) to be leached from stainless steel equipment or items in the process, lead (D008) due to the use of leaded gloves in the process, and mercury (D009) if there is a potential for a glass mercury thermometer to have been used in the same glovebox. Prior to May 1992, leaded gloves were disposed with other metal waste under the originating P/S code. Since May 1992, the gloves have been routinely segregated from other metal debris (TWCP-4166).

move to 4.3

No D001 (ignitable), D002 (corrosive), or D003 (reactive) listings apply to the solid wastes from miscellaneous operations because no ignitable chemicals were used in these processes and because the solid wastes do not contain any free liquids (see Section 6.0).

Separate line for AC1 [copy P/S codes from above]

AC, ~~AC1~~, AC2		D007, D008, D009, D011, D018, D022, ~~D030~~ D038, U213
ACL	*	D007, D008, D009
AD		D004, D005, D006, D007, D008, D009, D010, D011, D019, D039
APD		D007, D008, D009, D019, D021, D022, D039
AX	*	D007, D008, D009
CK		D005, D006, D007, D008, D009, D011
CV		~~D005, D006~~, D007, D008, D009, D011, D019, ~~D030~~
EDC	*	D007, ~~D008~~ stet
EOC	*	D007, D008, D009
EXT		D005, D006, D007, D008, D009, D011
FDL		D004, D005, D006, D007, D008, D009, D011 D010
FLU		D004, D005, D006, D007, D008, D009, D011 D010
HRS	*	D008
IB		D005, D006, D007, D008, D009, D011
ICP	*	D007, D008, D009
IE		D005, D006, D007, D008, D009, D011
LI		D005, D006, D007, D008, D009, D011
ME		D007, D008, D040
RASS/RSS		D004, D005, D006, D007, D008, D009, D010, D011, D019
RD		D008
SA		D007, D008, D009, D018, D038
SO		D004, D005, D006, D007, D008, D009, D010, D011
STF		D007, D008
WM		D007, D008, D009, D022, D035, D040
~~X0~~		~~D007, D008, D009, D022, D035, D040~~ stet check
XES		D004, D005, D006, D007, D008, D009, D010, D011
XO		D007, D008, D009, D022, D035, D040
XP		D004, D005, D006, D007, D008, D009, D010, D011

Activities under P/S codes LIBS, NCD, and SMP do not generate solid waste to which any HWN would be applicable.

4.3 Corrosivity, Reactivity, and Ignitability

~~See Section 6.~~0.

Insert from 4.3

DOR salts indicate the absence of "dangerous when wet materials" and pyrophoricity in these salts (TWCP-3730, TWCP-3731, TWCP-3732).

Verification that individual waste drums do not contain compressed gases, free liquids, or sealed containers greater than 4 L in volume is obtained from radiography of each waste containers and visual examination of selected containers during TWCP characterization activities. Any free liquids are remediated, and any sealed containers greater than 4 L in volume, or unpunctured or unvented gas containers, are removed; or else the waste container is tagged as non-compliant by filing a Prohibited Waste Report in accordance with *Nonconformance Reporting and Tracking* (TWCP-QP-1.1-007). For administrative controls on the prohibition of pyrophorics, see Sections 6.0 and 7.0.

9.0 VERIFICATION THAT THERE ARE NO POLYCHLORINATED BIPHENYLS (PCBs) IN THE WASTE STREAM

No PCBs were introduced into the miscellaneous operations, based on documentation in TA-55 procedures reviewed during the AK investigation and summarized in the process inputs listed in Table 1, Table 4, and Attachment 4. Oils used in the reviewed processes include vacuum pump oils, and cutting fluids used for cooling purposes; none of these oils are known to contain PCBs. All transformers known to contain PCBs have been tracked from the time of startup of TA-55 in 1978. Whenever any transformer oil is drained, it is handled by a subcontractor who is wholly responsible for its disposal disposal (TWCP-AK-2.1-005,R.1, Section 9.0). This oil does not enter the LANL disposal operations.

10.0 VERIFICATION THAT THERE IS NO ASBESTOS IN THE WASTE

Asbestos heating mantles were never used at TA-55. Asbestos gloves were used in glovebox operations in P/S codes OR and RM (TWCP-4162, TWCP-4166), which are discussed in *Process Acceptable Knowledge Summary Report for Pyrochemical Processes at TA-55* (TWCP-AK-2.1-006,R.1) and *Process Acceptable Knowledge Summary Report for Special Processing at TA-55* (TWCP-AK-2.1-007,R.1), respectively. Asbestos-bearing transite was widely used until recently for thermal insulation, including as a coverplate over the furnace in glovebox wells, and as part of end plates on Lindberg furnaces (TWCP-4162, TWCP-4166). Although many Lindberg furnaces have been replaced with newer asbestos-free furnaces, some are still in use at TA-55. The transite would have been disposed either as metal or as ceramic and glass debris waste.

11.0 CITED PROCEDURES AND REQUIREMENTS DOCUMENTS

- 40 CFR Part 261, Subpart C—Characteristics of hazardous waste, Sections 261.21 (*Characteristic of ignitability*), 261.22 (*Characteristic of corrosivity*), 261.23 (*Characteristic of reactivity*), and 261.24 (*Toxicity characteristic*)

- 40 CFR Part 261, Subpart D—Lists of hazardous waste, Sections 261.31 *(Hazardous wastes from non-specific sources),* 261.32 *(Hazardous wastes from specific sources),*

PROCESS INPUTS AND OUTPUTS

P/S Code	P/S Title	Process Inputs		Process Outputs		EPA Codes[2]	References[3]
		Feed Stream(s)	Chemicals/Reagents	Product	Waste Stream[1]		
AC AC1 AC2	Actinide Chemistry R&D	Actinide metals Acetonitrile	Actinide (Th-Am) metals Alcohols (unspecified) Alkali metals Alkaline earth metals Alkylating agents (unspecified) Benzene Chloroform Cryogens Dichloromethane Hexane Hydrochloric acid Inorganic reagents/complexes (unspecified) Inorganic salts (unspecified) Lanthanide metals Nitric acid Perchloric acid Phosphates Phosphines Potassium hydroxide Potassium salts Silver salts Sodium hydroxide Sodium salts Tetrahydrofuran Toluene Transition metals Transition-lanthanide-, actinide- metal complexes	Solvated halide complexes yielding homoleptic alkyl complexes; and unspecified	Reaction byproducts, residues, precipitated salts, spent solvents, spent acids, filtration media, debris	D007, D008, D009, D011, D018, D022, F002, F005 D038 U213	M-025 M-038
AC3	Actinide Chemistry	NA	NA	NA	NA	NA	NA

Separate — for draft, just duplicate row for AC1; we'll ask Jim Foxx to indicate which chemicals were used in which process

P/S Code	P/S Title	Process Inputs		Process Outputs		EPA Codes[2]	References[3]
		Feed Stream(s)	Chemicals/Reagents	Product	Waste Stream[1]		
AX	Solution Assay	Nitric and hydrochloric acid solutions with plutonium	Hydrochloric acid Nitric acid	Plutonium chloride solutions to P/S CX Plutonium nitrate solution to P/S RR	Nitric and hydrochloric acid solutions	D007, D008, D009	M-005
CK	RD&D Volatile Fluoride Plutonium Recovery	Solid residues of PuO_2	1-propanol (as coolant) Aluminum oxide Fluorine gas FOOF Liquid nitrogen Oxygen Sodium bicarbonate Trichloroethylene	Plutonium hexafluoride, unreacted ash	Spent aluminum oxide and sodium bicarbonate, organic reagents and solvents, debris	D005, D006, D007, D008, D009, D011	M-010 M-035
CV	RD&D Experimental Chlorination Processes	Plutonium in various chemical forms; solid PuO_2	Dilute acids/bases (unspecified) Ammonium chloride Carbon tetrachloride Hydrochloric acid Hydroxylamine hydrochloride Nitric acid Perchlorocarbons Potassium hydroxide ^{239}Pu, ^{237}Np, ^{241}Am, $^{235/238}U$, ^{232}Th in various compounds, residues, metal alloys Sodium bicarbonate Tetrachloroethylene Thionyl chloride	Anhydrous plutonium chloride; plutonium hexafluoride	Spent solvents and reagents, spent sodium bicarbonate, inorganic salts, debris	D005, D006, D007, D008, D009, D011, D019, ~~D039~~	M-027 M-035
EDC	Electrolytic Decontamination	Disassembled weapons components	Alkaline solutions Sodium nitrate Sodium sulfate	Decontaminated components	Evaporated uranyl hydroxide and uranyl sulfate, electrolytes (inert, nonhazardous salts), precipitated solids, spent caustic rinses, debris	D007, D008	M-014 M-041

P/S Code	P/S Title	Process Inputs		Process Outputs		EPA Codes[2]	References[3]
		Feed Stream(s)	Chemicals/Reagents	Product	Waste Stream[1]		
EOC	Experimental Oxide Characterization	Plutonium oxide (high-purity)	Purified nitrogen and helium Liquid nitrogen	Plutonium oxide	Debris	D007, D008, D009	M-015 M-040
EXT	Extraction RD&D	Various plutonium-containing matrices, pyrochemical salts	Hydrochloric acid Hydrofluoric acid Nitric acid Potassium hydroxide Sodium hydroxide	Aqueous solutions of plutonium	Spent aqueous and organic solutions, spent pyrochemical salts, debris	D005, D006, D007, D008, D009, D011	M-013
FDL	FOOF Demonstration Loop	Solid residues of PuO_2 and PuF_4	Aluminum oxide Carbon tetrafluoride Fluorine gas FOOF Krypton fluoride Methane Nitrogen, liquid and gas Oxygen Sodium bicarbonate	Plutonium hexafluoride, unreacted ash	Spent aluminum oxide and sodium bicarbonate, debris	D005, D006, D007, D008, D009, D011 D004, D010	M-011 M-036
FLU	Fluorination RD&D	Solid PuO_2	Aluminum oxide Ammonium chloride, fluoride, bifluoride Argon Fluorine gas FOOF Hydrochloric acid Krypton fluoride Nitrogen Sodium bicarbonate	Recoverable plutonium	Debris	D005, D006, D007, D008, D009, D011 D004, D010	M-012 M-035 Add per Table 1
HRS	High Resolution Spectroscopy	Actinide compounds	Carbon dioxide Fluorine FOOF Liquid nitrogen Nitrogen dioxide Sodium bicarbonate	Gas-phase actinide-containing species (PuF_6, UF_6, NpF_6, AmF_6)	Sodium bicarbonate filter (reactive gas traps), debris	D008	M-023 M-036

P/S Code	P/S Title	Process Inputs		Process Outputs		EPA Codes[2]	References[3]
		Feed Stream(s)	Chemicals/Reagents	Product	Waste Stream[1]		
RASS/ RSS	RAMAN Spectroscopy System	Solids or solutions with plutonium	Dilute acids (unspecified)	None	Used samples, debris	D004, D005, D006, D007, D008, D009, D010, D011, D019	M-043
RD	Repackaging into Retrievable Drums	NA	NA	NA	NA	D008	M-046
SA	Super Acid RD&D	Various actinide compounds and matrices; actinide (Np, Pu, Th, Am, Cm, U) metals	Aluminum oxide Antimony pentafluoride Benzene Bromine Diethyl ether Hydrofluoric acid Inorganic reagents (such as $NaN0_3$) Iodine Magnesium oxide Methylene chloride Organic reagents (such as CMPO) Pyridine Sulfuric acid Hydrocarbon, ethereal, and aromatic solvents (unspecified) Tetrahydrofuran Toluene	Superacid solutions and evaporated solid superacid complexes; solvated halide complexes yielding homoleptic alkyl complexes	Spent aqueous and organic solvents and reagents, organometallic and inorganic compound residues, debris	D007, D008, D009, D018, D038, F002, F003, F005 U213	M-004 M-024 M-037
SMP	SP Mounting Preparation	NA	NA	NA	NA		M-044

P/S Code	P/S Title	Process Inputs		Process Outputs		EPA Codes[2]	References[3]
		Feed Stream(s)	Chemicals/Reagents	Product	Waste Stream[1]		
X0	Inactive or Unspecified P/S Material	Waste materials from common areas (e.g., hallway, change rooms, basement) that could not be associated with a specific room	NA	None	Miscellaneous trash and debris	Default HWNs (see Table 5): D007, D008, D009, D022, D035, D040, F001, F002, F005	M-046, M-050
XES	X-Ray Energy Spectroscopy	Solid plutonium samples	Acid/base solutions (unspecified)	None	Unused/spent solid plutonium samples, spent acid/base solutions from sample preparation	D004, D005, D006, D007, D008, D009, D010, D011	M-042
XO	Inactive or Unspecified P/S Material	Waste materials generated within specific rooms but not associated with a specific P/S code; room trash boxes	Chloroform Ethanol Hexane Isopropyl alcohol Methylene chloride Methyl ethyl ketone Trichloroethylene 1,1,2-trichloro-1,2,2-trifluoroethane [freon] Organic strip Citra peel	None	Rags contaminated with organic chemicals; other room trash and debris	Default HWNs (see Table 5): D007, D008, D009, D022, D035, D040, F001, F002, F005	M-046, M-050

Checked - all changes made JTM 5/1/01

TA-55 PLUTONIUM FACILITY
ACCEPTABLE KNOWLEDGE REPORT

REPORT TITLE: Process Acceptable Knowledge Summary Report for Miscellaneous Operations at TA-55

REPORT NUMBER: TWCP-AK-2.1-004,R.2 (LA-UR-01-)

WASTE GENERATED FROM PROCESS/STATUS CODES: AC, AC1, AC2, AC3, ACL, AD, APD, AX, CK, CV, EDC, EOC, EXT, FDL, FLU, HRS, IB, ICP, IE, LI, LIBS, ME, NCD, RASS/RSS, RD, SA, SMP, SO, STF, VS, WM, X0, XES, XO, XP

EFFECTIVE DATE: _____

NEXT REVIEW DATE: _____

DOCUMENT PREPARER:

_____ _____
NAME DATE

APPROVALS:

_____ _____
INDEPENDENT TECHNICAL REVIEWER/EDITOR DATE

_____ _____
SITE PROJECT MANAGER DATE

_____ _____
WASTE CERTIFICATION OFFICIAL DATE

_____ _____
SITE PROJECT QA OFFICER DATE

_____ _____
FACILITY REPRESENTATIVE DATE

© 2000, 2001 University of California

The solids were ~~rang~~ wrung from rags, with water before they were discarded. Any perchloric salts were ~~ended up in~~ sent to cementation

AC1 and AC2 were that AC1 was an analytical process using aqueous compounds, predominantly dilute nitric, hydrochloric, and perchloric acid solutions. These acidic solutions would have been neutralized and precipitated to recover the plutonium. ~~Solids were sent to recovery, and~~ Solutions were sent to cementation. P/S code AC2 involved synthesis of (air-sensitive) new compounds in an inert glovebox. This was a non-aqueous process. P/S code AC3 is not related to P/S codes AC1 or AC2, but is predominantly a metal operation (M-038/TWCP-3545). This code had not yet become active by the time this report was prepared, and no other information was available for it.

The procedure describes operations that comprise a broad range of laboratory activities in support of fundamental and applied actinide chemistry research (M-025/TWCP-3546). These activities include, but are not limited to, preparation of solvents and reagents, synthesis of new chemical compounds, and characterization and analysis of new chemical compounds using wet chemistry methods and analytical instrumentation. The chemical list indicates the use of a variety of materials, including organic solvents (e.g., toluene and benzene), alkaline earth metals, and transition metals. The SMEs (M-038/TWCP-3546) familiar with these activities indicated that a "variety of aromatic, alkaline, and chlorinated solvents" (e.g., tetrahydrofuran, toluene, benzene, methylene chloride, and chloroform) were used in these activities. Hexane and acetonitrile began to be used in P/S code AC2 recently. Acetonitrile is an Ap. VIII VOC, but its HWN (U003) does not apply in this case. These organic chemicals have the following HWNs: benzene (D018, F005), chloroform (D022), methylene chloride (F002), tetrahydrofuran (U213), and toluene (F005). The SME stated that waste byproducts from the operations that contain these constituents were not discarded but were held in the glovebox for reprocessing or recovery. Because the SME was not involved with these activities after 1994, he was unable to definitively state how the waste materials were ultimately dispositioned. In a later discussion, other SMEs (M-038/TWCP-3546) indicated that use of the chlorinated solvents associated with P/S code AC1 was discontinued in 1994 and that items contaminated with these constituents mentioned are still in the glovebox and have yet to be discarded as of the date of this report. Transition metals used as reagents in the synthesis of new materials in this process included sodium salts, potassium salts, and silver salts. The precipitated salt byproducts also were not discarded but were held in the glovebox for reprocessing and recovery. In a later discussion, other SMEs confirmed that silver salts associated with P/S code AC1 are still in the glovebox awaiting determination for a path forward for disposition. Other than silver (D011), no RCRA metals were used in the processes (M-038/TWCP-3546). In addition to the standard debris wastes, process wastes may have included reaction by-products and residues, heating mantles, vacuum pump apparatus, various pieces

P/S code XES is a plutonium assay technique in which samples containing plutonium are excited with X-rays, and the resulting emission spectra are measured to determine plutonium concentrations (M-042/TWCP-3546). Sample preparation may occasionally require the use of acid/base solutions to suspend solids. Unused sample material is returned to the originator. The time period for P/S code XES is 1988 to present. The process occurs in Room 106.

P/S code RASS/RSS involves interrogating small samples (solids or solutions containing less than 1 gram of nuclear material from other P/S codes) using laser-based spectroscopy (M-043/TWCP-3546). This P/S code was created February 1993 and is still active although the process has not been used in two to three years. The operation takes place in Room 105, GB-165. Sample preparation is not conducted under this P/S code. If samples require preparation prior to spectroscopy (e.g., if the sample must be diluted with an acid solution because plutonium concentrations are too high), the preparation steps are performed by the originating P/S code. Once analyzed, samples are returned to the originating P/S code, sent on to other P/S codes, or sent for recovery/reprocessing. No waste is generated from this P/S code except standard glovebox trash, including gloves that may be leaded or unleaded.

P/S code LIBS used a laser for isotopic analyses of samples of high purity metals and oxides (M-047/TWCP-3546). The process was initiated January 1998 and is still operational. Some developmental work commenced prior to 1998; however, this was before the process went "hot." Process activities are conducted in Room 105, GB 158 and 180. Waste forms include standard glovebox maintenance items. There is no sample preparation involved, and no organic or RCRA metal constituents are introduced or generated during the process.

~~P/S code SMP~~ has "never gone hot" (M-044/TWCP-3546) but may start up in the ~~first six months of 2000.~~ end of 2001 The process will take place in Room 120 and will involve mounting samples of plutonium metal and stainless steel using a low-melting bismuth-tin alloy in preparation for electron microscopy. No organic solvents or RCRA metals will be introduced or generated as wastes during the process. No other sample preparation will be done under this P/S code. Any required surface preparation will be done at the originating P/S code, and samples will be returned to the originating P/S code. Waste will consist of standard glovebox maintenance items.

P/S code EOC began in March 1992 in Room 208 as an experiment designed to calculate the surface area and pore size distribution of a sample and to analyze its surface characteristics (M-015/TWCP-3546).

HEPA filters, metal containers, brushes, and small tools. Leaded gloves are also generated as process waste. Prior to 1987, leaded gloves were discarded in the combustible and non-combustible debris waste streams. Between 1987 and May 1992, leaded gloves were segregated from combustible debris and discarded in the metal debris waste stream because of concern that explosive lead oxides might form if the combustible debris waste was incinerated. Since May 1992, leaded gloves have been routinely segregated from other metal debris waste and assigned to a separate leaded-glove waste stream.

Because items from several different processes are usually combined into individual waste drums, the physical waste form of each drum must be determined independently. This information is documented on a Waste Origination and Disposition Form (WODF) by the waste generator according to controlled procedures. The P/S code for each waste item is also documented on this form. In the packaging process, a standard form, the Discardable Waste Log Sheet (DWLS), was used to list each item ID number and record its matrix material. This form was signed by the waste packager, reviewed, and approved by quality assurance (QA) personnel.

3.5.2 Radionuclide Content Identification

The primary plutonium material type inputs for miscellaneous operations at TA-55 are listed in Table 2, and uranium material types are listed in Table 3. The designation *material type* (MT) (e.g., MT 52) is used within the DOE Complex to describe the isotopic composition of common blends of radioactive materials used within the Complex. The material type notation was developed because it is a convenient way to describe material types that have very consistent isotopic compositions. Tables 2 and 3 indicate the isotopic composition of the material types at the time the waste was characterized.

see AK-02

The plutonium material type provides the basis for estimating an upper bound for U-234, U-235, and Am-241 contents based on the rate of decay of their precursors, Pu-238, Pu-239 and Pu-241, respectively. The results of these calculations are also tabulated in Table 2, assuming (a) none of these isotopes were initially present in the material, (b) the oldest Pu material in inventory dates back to 1 January 1960, and (c) the waste was packaged on 1 January 1996, making it 36 years old (TWCP-698).

The material type used in the process generating each waste item was documented on the WODF and DWLS. However, some of the plutonium recovery processes separate plutonium and americium, or plutonium and uranium, so that their relative ratios may be altered in the

Table 2. Average Isotopic Content of Plutonium Material Types and Enrichments (Weight %)

bounds dimensionless

Material Type (MT)	Plutonium isotope and half-life						Upper limits for weight ratios		
	Pu-238 (87.74 yr)	Pu-239 (24120 yr)	Pu-240 (6564 yr)	Pu-241 (14.35 yr)	Pu-242 (376,300 yr)	Pu-244 (8.26 x 10^7 yr)	U-234/ Total Pu	U-235/ Total Pu	Am-241/ Total Pu
MT 51	0.006	96.77	3.13	0.076	0.018	—	1×10^{-5}	0.001	0.0006
MT 52	0.01	93.78	6	0.2	0.02	—	2×10^{-5}	0.001	0.002
MT 53	0.03	91.08	8.45	0.366	0.071	—	7×10^{-5}	0.0009	0.003
MT 54	0.046	87.42	11.5	0.81	0.22	—	0.0001	0.0009	0.007
MT 55	0.06	83.88	14.73	1.03	0.304	—	0.0002	0.0009	0.009
MT 56	0.061	81.9	16.51	1.18	0.355	—	0.0002	0.0009	0.01
MT 57	0.433	74.63	20.7	2.55	1.69	—	0.001	0.0008	0.02
MT 42									
84%	1.02	1.37	10.32	3.13	84.14	0.02	0.003	1×10^{-5}	0.03
90%	0.72	1.26	6.4	1.86	89.77	—	0.002	1×10^{-5}	0.02
95%	0.45	0.56	2.47	0.906	95.58	0.029	0.001	6×10^{-6}	0.008
MT 83									
83%	83.89	13.8	1.9	0.32	0.09	—	0.26	0.0002	0.003
89%	89.26	10.07	0.633	0.021	0.015	—	0.28	0.0001	0.0002

Source: TWCP-698

Table 3. Average Isotopic Content of Uranium Material Types and Enrichments (Weight %)

Material Type	U-234	U-235	U-236	U-238
MT 12	0.0015	0.23	0.008	99.77
MT 35	0.36	37.6	0.14	61.9
MT 36	0.63	62.44	0.18	36.75
MT 38	1.03	93.04	0.41	5.53
MT 39	1.32	97.52	0.17	0.99

Source: TWCP-698

Footnote: (see AK-02, the Chloride operation rep.)

Table 4. Chemical Inputs to Processes Described in This Report

Chemical input	P/S Codes in which RCRA-Listed Chemicals Are Used	Comments on Applicability of EPA HWN
Gases and Cryogens		
Carbon dioxide (gas) Fluorine (gas) Halogen fluorides Krypton fluoride Methane (gas) Nitrogen dioxide (gas) Nitrogen, liquid		D001 and D002 do not apply to these gases because there are no free liquids in this waste. Also the gas cylinders are outside the building, and the gases are plumbed into the glovebox.
Acids		
Hydrochloric acid Hydrofluoric acid Nitric acid Oxalic acid Perchloric acid Sulfuric acid Superacids (e.g., HSO_3F)	 AD SA	D002 does not apply to the solid debris waste because there are no free liquids in this waste. D001 (oxidizer) does not apply to the use of nitric or perchloric acid or to the superacids for the same reason.
Bases		
Calcium hydroxide Potassium hydroxide Sodium hydroxide		D002 does not apply to the solid debris waste because there are no free liquids in this waste.
Inorganic Chemicals		
Aluminum bifluoride Aluminum chloride Aluminum fluoride Aluminum nitrate Aluminum oxide Ammonium chloride Antimony pentafluoride Bromine FOOF Hydrogen peroxide Iodine Iron oxide Lead and lead hydroxide, oxide, or nitrate Magnesium oxide Na, K, Li, Mg, Ca, Fe, nitrates, chlorides, carbonates, bicarbonates, oxalate, nitrites Phosphates Potassium choride Potassium dichromate	 AD, APD AD	 D008 D007

Hydroxylamine hydrochloride
Hydroxylamine nitrate

Chemical input	P/S Codes in which RCRA-Listed Chemicals Are Used	Comments on Applicability of EPA HWN
Potassium permanganate		
Potassium salt (not specified)		
Silver salt	AC1	D011
Sodium bicarbonate		
Sodium carbonate		
Sodium chloride		
Sodium chlorite		
Sodium nitrate		
Sodium salt (not specified)		
Sodium sulfate		
Thorium oxide		
Metals		
Alkaline earth metals		
Bismuth-tin alloy		
Gallium metal, oxide or salt		
Lanthanide metals		
Platinum and platinum-rhodium alloys		
Stainless steel		D007 (chromium)
Tantalum metal, oxide or salt		
Zirconium and tantalum alloys		
Organic Chemicals		
1-propanol		
Acetone	ME	F003
Acetonitrile	AC2	Appendix VIII compound. EPA HWN U003 does not apply due to the manner in which this chemical is used in TA-55 processes.
Alkylating agents (unspecified)		
Benzene	AC/AC1/AC2, SA	D018 and F005: solvent use
Carbon tetrachloride	AD, CV	D019 applies to AD and CV. F001 does not apply because this chemical was not used for degreasing.
Carbon tetrafluoride		
Chloroform	AC/AC1/AC2, APD, XO	D022
Citrapeel		
DBBP (dibutyl butyl-phosphonate)		
DBBP (dibutyl butyl-phosphonate) / Isopar (isoparaffinic hydrocarbon solvent)		
Diethyl ether	SA	F003
Dihexyl N,N-diethylcarbamoylmethyl phosphonate (DHDCMP)		
Diisopropyl benzene		
Ethanol		
Hexane		
Hydrazine dihydrochloride		
Hydrazine hydrochloride		
~~Hydroxylamine chloride~~		
~~Hydroxylamine nitrate~~		

move to inorganic list

- Waste management inspectors perform visual examination of the waste prior to its initial packaging, thus allowing the inspectors to verify the generator's WODF statement (TWCP-701, Sections 3.8.5 to 3.8.6).

(see AK-02!)

- ~~Explosives were prohibited from TA-55 until installation of the Impact Test Fa~~cility ~~in the early 1990s.~~ Explosives continue to be banned in the solid waste streams up to the present time. If a misfire should occur, the requirement is to destroy the unspent powder by burning.

- The Waste Profile Request Form (WPRF), which has been in use at LANL since 1991, includes a statement which must be authenticated by the waste generator, that the waste is not ignitable (flash point >200°F), reactive, or corrosive.

- The TA055 Generator Attachments to the Certification Plan were updated in 1995 (TWCP-700) but the prohibition on liquids in the waste, and the waste management inspection, remained in effect.

Hence, since the inception of operations at TA-55, corrosive and reactive wastes have been excluded from TA-55 solid wastes through the prohibition of liquids.

The absence of these prohibited items is verified through radiography of each waste container and visual examination of selected containers during TWCP characterization activities. These data will be used to assess the accuracy of AK information in accordance with *Reconciliation of Visual Examination and Radiography Information* (TWCP-QP-1.1-028). Any free liquids are remediated, or the container is tagged as non-compliant by filing a Prohibited Waste Report in accordance with *Nonconformance Reporting and Tracking* (TWCP-QP-1.1-007).

7.0 VERIFICATION THAT INCOMPATIBLE CHEMICALS WERE PROHIBITED

Section 6.0 summarizes administrative controls in place at TA-55 that prohibit incompatible chemicals in the waste, and measures taken to verify their absence. In addition, all waste containers shipped from TA-55 to TA-54 for storage were evaluated for potentially incompatible chemicals in accordance with 49 *Code of Federal Regulations* (CFR) Subpart C—Segregation and separation chart of hazardous materials; Section 177.848, Segregation of hazardous materials, and were determined to be in compliance with this requirement.

8.0 VERIFICATION THAT THERE ARE NO COMPRESSED GASES, FREE LIQUIDS, NONRADIONUCLIDE PYROPHORICS, SEALED CONTAINERS GREATER THAN FOUR LITERS IN VOLUME, OR >1% RADIONUCLIDE PYROPHORICS

Most gases used at the TA-55 Plutonium Facility are stored outside the building and the gas is plumbed into the glovebox from outside the building (TWCP-4164). Occasionally, a lecture bottle may have been used for a process inside the building, but these bottles

10.0 CITED PROCEDURES AND REQUIREMENTS DOCUMENTS

- 40 CFR Part 261, Subpart C—Characteristics of hazardous waste, Sections 261.21 (*Characteristic of ignitability*), 261.22 (*Characteristic of corrosivity*), 261.23 (*Characteristic of reactivity*), and 261.24 (*Toxicity characteristic*)

- 40 CFR Part 261, Subpart D—Lists of hazardous waste, Sections 261.31 *(Hazardous wastes from non-specific sources)*, 261.32 *(Hazardous wastes from specific sources)*, and 261.33 *(Discarded commercial chemical products, off-specification species, container residues, and spill residues thereof)*

- 49 CFR Subpart C—Segregation and separation chart of hazardous materials. Section 177.848, *Segregation of hazardous materials*

- *Acceptable Knowledge Documentation* (TWCP-QP-1.1-021,R.5)

- *Los Alamos National Laboratory Transuranic Waste Characterization Sampling Plan* (TWCP-PLAN-0.2.7-001,R.3)

- *Nonconformance Reporting and Tracking* (TWCP-QP-1.1-007)

- *Process Acceptable Knowledge Summary Report for Chloride Operations at TA-55* (TWCP-AK-2.1-002,R.1)

- *Process Acceptable Knowledge Summary Report for Metal Operation Processes at TA-55* (TWCP-AK-2.1-003,R.1)

- *Process Acceptable Knowledge Summary Report for Nitrate Operations at TA-55* (TWCP-AK-2.1-005,R.1)

- *Process Acceptable Knowledge Summary Report for Pyrochemical Processes at TA-55* (TWCP-AK-2.1-006,R.1)

- *Process Acceptable Knowledge Summary Report for Special Processing at TA-55* (TWCP-AK-2.1-007,R.1)

- *Reconciliation of Visual Examination and Radiography Information* (TWCP-QP-1.1-028)

- *Waste Acceptance Criteria for the Waste Isolation Pilot Plant* (DOE/WIPP-069)

- *Waste Analysis at Facilities that Generate, Treat, Store and Dispose of Hazardous Waste* (EPA/OSWER 9938.4-03)

- Waste Analysis Plan, Attachment B to the *Hazardous Waste Facility Permit Issued to the Waste Isolation Pilot Plant* (EPA No. NM4890139088)

ACCEPTABLE KNOWLEDGE ROADMAP

Waste from P/S Codes: AC, AC1, AC2, AC3, ACL, AD, APD, AX, CK, CV, EDC, EOC, EXT, FDL, FLU, HRS, IB, ICP, IE, LI, LIBS, ME, NCD, RASS/RSS, RD, SA, SMP, SO, STF, VS, WM, XES, XP, XO, X0

Copies of these documents are in the TWCP RMDC Center.

TWCP Record No.	Information Category Code*	Information	Source	Summary	Limitations
TWCP-352	B	Description of plutonium recovery processes	*Wastes from Plutonium Conversion and Scrap Recovery Operations,* LA-11069-MS, March 1988.	Document describes the Pu residues and the various treatment approaches used in recovering plutonium from scrap	Document does not give information about RCRA constituents introduced or present in the processes
TWCP-614	D	All TA-55 waste is Defense related.	Memo from Doug Sankey.	All TA-55 waste is Defense related.	Budget information may not be acceptable.
TWCP-697	C	Waste was controlled to meet WIPP WAC requirements as early as 1983.	*Los Alamos TRU Waste Certification Plan for Newly Generated TRU Waste,* WCP-HSE7-CPL-01, R.2 (November 1984)	Waste was controlled to meet WIPP WAC requirements as early as 1983. Generator Attachments were used to describe and reference specific generator procedures.	Overview document - Generator Attachments provide more detailed information.
TWCP-698	B	Gives Material Type compositions	NMT Memo, NMT-7 WM/EC-96-032 Benchmark Environmental Corp. Memo, AL-7193 BEC	Gives Material Type compositions	Does not give information on how material may fractionate in TA-55 waste processes
TWCP-700	C	*Attachment 3 to the Los Alamos TRU Waste Certification Plan for Newly Generated TRU Waste,* R05	*NMT-7 Attachment, January 1995,* TRUWM-TA55-CPA-03,R00	Documents controls to meet WIPP WAC were implemented and how independent verification was accomplished.	Information is not extremely detailed.

Add to the roadmap: TWCP sampling plan, AK-reports. } see AK-02!

* Information Category Codes: A = forms intended for use in waste certification, B = data from controlled databases and published documents, C = unpublished data, and D = interviews, memos, and letters

TIMELINE FOR TA-55 MISCELLANEOUS PROCESSES (continued)

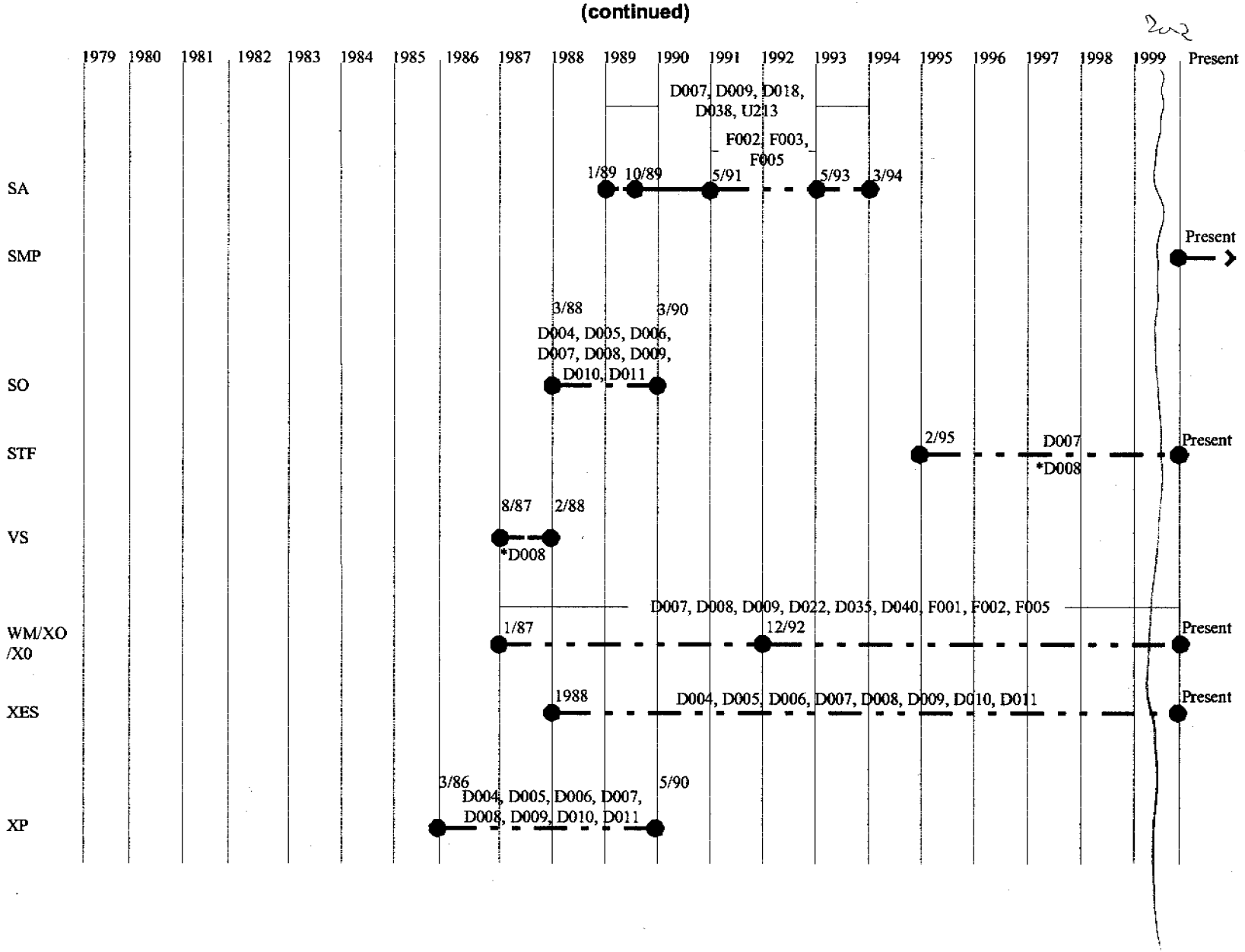

Draft # 2
5/1/01 jtm

TA-55 PLUTONIUM FACILITY
ACCEPTABLE KNOWLEDGE REPORT

REPORT TITLE: Process Acceptable Knowledge Summary Report for Miscellaneous Operations at TA-55

REPORT NUMBER: TWCP-AK-2.1-004,R.2 (LA-UR-01-)

WASTE GENERATED FROM PROCESS/STATUS CODES: AC, AC1, AC2, AC3, ACL, AD, APD, AX, CK, CV, EDC, EOC, EXT, FDL, FLU, HRS, IB, ICP, IE, LI, LIBS, ME, NCD, RASS/RSS, RD, SA, SMP, SO, STF, VS, WM, X0, XES, XO, XP

EFFECTIVE DATE: _____

NEXT REVIEW DATE: _____

DOCUMENT PREPARER:

_____ _____
NAME DATE

APPROVALS:

_____ _____
INDEPENDENT TECHNICAL REVIEWER/EDITOR DATE

_____ _____
SITE PROJECT MANAGER DATE

_____ _____
WASTE CERTIFICATION OFFICIAL DATE

_____ _____
SITE PROJECT QA OFFICER DATE

_____ _____
FACILITY REPRESENTATIVE DATE

© ~~2000,~~ 2001 University of California

HISTORY OF REVISIONS

Revision No.	Date	Pages Revised	Reason for Change
0	06/30/00	—	New report (TWCP-03941)
1	12/04/00	All	Make report a controlled document and respond to CAR-00-036
2		All	To respond to CBFO reviewers comments and to update with new AIS information

CONTENTS

Section **Page**

ACRONYMS v

TA-55 PROCESS/STATUS (P/S) CODE INDEX vii

PROCESS ACCEPTABLE KNOWLEDGE SUMMARY ix

1.0 INTRODUCTION 1

2.0 METHODOLOGY USED TO SEARCH FOR AK RECORDS 1

3.0 DESCRIPTION OF THE PROCESS WASTE 3
3.1 Facility and Mission 3
3.2 3 Waste Physical Form and Content Description 3
3.3 4 Waste Volume and Time Period of Waste Generation 4
3.4 5 Waste Generation Processes 4
3.5 6 Material Inputs to the Waste Generation Process 22

insert new section 3.2 "Basis, Assumption ... ~~from file~~

4.0 ASSIGNMENT OF EPA HAZARDOUS WASTE NUMBERS 26
4.1 F, K, and P Listings 26
4.2 Toxicity Listings 32
~~4.3 Corrosivity, Reactivity, and Ignitability ..... 33~~

~~5.0 DETERMINATION OF THE RADIOISOTOPIC COMPOSITION ..... 34~~

5 ~~6~~.0 VERIFICATION THAT IGNITABLE, REACTIVE, AND CORROSIVE WASTES WERE EXCLUDED 34

6 ~~7~~.0 VERIFICATION THAT INCOMPATIBLE CHEMICALS WERE PROHIBITED 35

7 ~~8~~.0 VERIFICATION THAT THERE ARE NO COMPRESSED GASES, FREE LIQUIDS, NONRADIONUCLIDE PYROPHORICS, SEALED CONTAINERS GREATER THAN FOUR LITERS IN VOLUME, OR >1% RADIONUCLIDE PYROPHORICS 35

8 ~~9~~.0 VERIFICATION THAT THERE ARE NO POLYCHLORINATED BIPHENYLS (PCBs) IN THE WASTE STREAM 36

9 ~~10~~.0 CITED PROCEDURES AND REQUIREMENTS DOCUMENTS 36

Tables

1 Process Feed Materials for Miscellaneous Operations 23
2 Average Isotopic Content of Plutonium Material Types and Enrichments ~~(Weight %)~~ 25
3 Average Isotopic Content of Uranium Material Types and Enrichments ~~(Weight %)~~ 25
4 Chemical Inputs to Processes Described in This Report 27
5 Evaluation of the Applicability of EPA Hazardous Waste Numbers to Processes Discussed in This Report 30

Attachments

1 Acceptable Knowledge Roadmap (14 pages)
2 LANL and TA-55 Site Maps (2 pages)
3 Timeline for TA-55 Miscellaneous Processes (6 pages)
4 Process Inputs and Outputs (11 pages)
5 Simplified Process Flow Diagram (1 page)

Change all 3.4... to 3.5...

TA-55 PROCESS/STATUS (P/S) CODE INDEX

Note: This index indicates the main process AK summary report and report section that covers each P/S code mentioned in this report.

P/S Code	P/S Name	Process AK Summary Report and Report Section*	
AC	Actinide Chemistry, R&D	Miscellaneous Operations	3.4.3, Att. 4
AC1	Actinide Chemistry, R&D	Miscellaneous Operations	3.4.3, Att. 4
AC2	Actinide Chemistry, R&D	Miscellaneous Operations	3.4.3, Att. 4
AC3	Actinide Chemistry, R&D	Miscellaneous Operations	3.4.3, Att. 4
ACL	Analytical Chemistry Laboratory	Miscellaneous Operations	3.4.4, Att. 4
AD	Actinide Processing Demonstration	Miscellaneous Operations	3.4.1, Att. 4
APD	Actinide Processing Demonstration	Miscellaneous Operations	3.4.7, Att. 4
AX	Solution Assay	Miscellaneous Operations	3.4.3, Att. 4
CF	Cement Fixation	Nitrate Operations	3.4.5, Att. 4
CK	RD&D Volatile Fluoride Pu Recovery	Miscellaneous Operations	3.4.2, Att. 4
CV	R&D Experimental Chlorination Processes	Miscellaneous Operations	3.4.2, Att. 4
CX	Chloride Anion Exchange	Chloride Operations	3.4.2, 3.4.3, Att. 4
EDC	Electrolytic Decontamination	Miscellaneous Operations	3.4.8, Att. 4
EOC	Experimental Oxide Characterization	Miscellaneous Operations	3.4.5, Att. 4
EV	Evaporator	Nitrate Operations	3.4.4, Att. 4
EXT	Extraction RD&D	Miscellaneous Operations	3.4.6, Att. 4
FDL	FOOF Demonstration Loop	Miscellaneous Operations	3.4.2, Att. 4
FLU	Fluorination RD&D	Miscellaneous Operations	3.4.2, Att. 4
HP	Cement Fixation	Nitrate Operations	3.4.5, Att. 4
HRS	High Resolution Spectroscopy	Miscellaneous Operations	3.4.5, Att. 4
IB	Matrix Study of Pyrochemical Salts	Miscellaneous Operations	3.4.6, Att. 4
ICP	ICP–AES Analysis	Miscellaneous Operations	3.4.4, Att. 4
IE	Isotope Enrichment	Miscellaneous Operations	3.4.2, Att. 4
IS	Incinerator	Nitrate Operations	3.4.1, Att. 4
LI	XF6 Experimental Measurements	Miscellaneous Operations	3.4.2, Att. 4
LIBS	Laser-Induced Breakdown Spectroscopy System	Miscellaneous Operations	3.4.5, Att. 4

P/S Code	P/S Name	Process AK Summary Report and Report Section*	
ME	Metallography	Miscellaneous Operations	3.4.10, Att. 4
NCD	Nonconfirming Drums	Miscellaneous Operations	3.4.9, Att. 4
OR	Direct Oxide Reduction	Pyrochemical Processes	3.4.2, Att. 4
PTS	RD&D Pretreatment Study	Nitrate Operations	3.4.1, 3.4.6, Att. 4
PX	Pyrochemical R&D	Special Processing	3.4.6, 3.4.7, 3.4.8, 3.4.9, 3.4.10, Att. 4
RASS/RSS	Raman Spectroscopy System	Miscellaneous Operations	3.4.5, Att. 4
RB	Roasting and Blending	Nitrate Operations	3.4.3, Att. 4
RBJ	Roasting and Blending Jr.	Nitrate Operations	3.4.3, Att. 4
RC	Rotary Calciner	Nitrate Operations	3.4.1, 3.4.6, Att. 4
RD	Repackaging into Retrievable Drums	Miscellaneous Operations	3.4.9, Att. 4
RR	Ion Exchange	Nitrate Operations	3.4.3, Att. 4
SA	Super Acid RD&D	Miscellaneous Operations	3.4.3, Att. 4
SMP	SP Mounting Preparation	Miscellaneous Operations	3.4.5, Att. 4
SO	Super Oxidizer, FOOF Program	Miscellaneous Operations	3.4.2, Att. 4
SS	Salt Stripping	Pyrochemical Processing	3.4.3, 3.4.4, 3.4.5, 3.4.7, 3.4.8, Att. 4
STF	Standard Fabrication	Miscellaneous Operations	3.4.6, Att. 4
VS	Confirmation, Inspection & Sampling	Miscellaneous Operations	3.4.5, Att. 4
WM	Waste Management	Miscellaneous Operations	3.4.9, Att. 4
X0	Inactive or Unspecified P/S Material	Miscellaneous Operations	3.4.9, Att. 4
XES	X-Ray Energy Spectroscopy	Miscellaneous Operations	3.4.5, Att. 4
XO	Inactive or Unspecified P/S Material	Miscellaneous Operations	3.4.9, Att. 4
XP	RD&D Experimental Processes	Miscellaneous Operations	3.4.4, Att. 4

* Process AK summary reports: Chloride Operations (TWCP-AK-2.1-002,R.~~1~~ 2), Miscellaneous Operations (this report), Nitrate Operations (TWCP-AK-2.1-005,R.~~1~~ 2), Pyrochemical Processes (TWCP-AK-2.1-006,R.~~1~~ 2), and Special Processing (TWCP-AK-2.1-007,R.~~1~~ 2)

PROCESS ACCEPTABLE KNOWLEDGE SUMMARY

Waste-generating process: Miscellaneous Operations

P/S codes:

AC, AC1, AC2, AC3, ACL, AD, APD, AX, CK, CV, EDC, EOC, EXT, FDL, FLU, HRS, IB, ICP, IE, LI, LIBS, ME, NCD, RASS/RSS, RD, SA, SMP, SO, STF, VS, WM, X0, XES, XO, XP

Type of waste generated:

Retrievably stored and newly generated, mixed and non-mixed, combustible and non-combustible debris; liquid wastes sent to the Radioactive Liquid Waste Treatment Facility at TA-50 or immobilized in cement (as part of nitrate operations)

Site: LANL

Facility Mission (including defense and non-defense programs):

TA-55 has extensive capabilities for the extraction and recovery of plutonium from residues and scraps generated from operations at various LANL facilities and other DOE sites in the defense complex. The recovered plutonium is converted into pure plutonium feedstock. These manufacturing and recovery operations, associated maintenance operations, and TA-55 plutonium research are the sources of TRU waste contaminated scrap, residues, and debris generated at TA-55. The scrap and residues are processed to recover as much plutonium as practicable before disposal. Wastes from miscellaneous operations are generated from plutonium recovery and purification for defense and non-defense programs; these wastes are generated and produced in the same rooms and gloveboxes and so were not segregated until August 27, 1998.

Area(s) or building(s) where the process waste was generated (including operations carried out in those areas):

TA-55 Plutonium Facility (Building PF-4), Rooms 105, 106, 112, 113, 115, 120, 124, 126, 208, 209, 210, 401, 409, 420, and 432

Description of the process waste (physical form and typical content description):

Primarily debris waste, including cellulosic materials, plastic, rubber, ceramic, metal and glass debris, and waste sent to nitrate operations to be immobilized in cement.

Description of the waste-generating process:

The overall goal of the miscellaneous operations is to recover plutonium from metal, metal alloys, scrap, and residues and produce a purified plutonium oxide product or feedstock for conversion to metal. Processes in miscellaneous operations include pretreatment, dissolution, purification, and hydroxide precipitation.

Summary Category Group(s): S5000
Waste Matrix Code(s): S5100, S5300, S5400

Process feed:

Plutonium metal or metal alloy, oxides and hydroxide cakes; pyrochemical salts; anode heels; ash; and residues from other DOE facilities

Radioisotopic content of the waste:

Variety of plutonium material types with different well-defined isotopic compositions; u.c. americium-241, neptunium-237, and uranium-234 may be present at detectable concentrations as decay products of their plutonium precursors. Some of the processes separate plutonium and americium or plutonium and uranium. The waste will usually be enriched in americium and uranium, but may also be depleted in some cases. Protactinum-231 and Cesium-137 may be present in trace amounts due to their widespread presence as contaminants in TA-55 operations.

RCRA Constituents/EPA Hazardous Waste Numbers:

- No K or P codes
- F001: P/S codes WM, ~~XO, X0 (trichloroethylene~~ and 1,1,2-trichloro-1,2,2-trifluoroethane (freon))
- F002: P/S codes ~~AC/AC1/AC2, AD, APD~~, SA, WM, X0, XO (chlorobenzene, methylene chloride, tetrachloroethylene, trichloroethylene)
- F003: AD, APD, ME, SA (acetone, diethyl ether, methanol, xylene)
- F005: P/S codes ~~AC/AC1/AC2~~, SA, WM, X0, XO (benzene, methyl ethyl ketone, toluene, pyridine)
- D004 (arsenic) and D010 (selenium): P/S codes AD, FDL, FLU, RASS/RSS, SO, XES, ~~SP~~
- D005 (barium) and D006 (cadmium): P/S codes AD, CK, CV, EXT, FDL, FLU, IB, IE, LI, RASS/RSS, SO, XES, XP, ~~SO~~
- D007 (chromium) and D009 (mercury): P/S codes AC, AC1, AC2, ACL, AD, APD, AX, CK, CV, EDC (D007 only), EOC, EXT, FDL, FLU, HRS, IB, ICP, IE, LI, ME (D007 only), RASS/RSS, RD, SA, SO, STF (D007 only), VS, WM, X0, XES, XO, XP
- D008 (lead, excluding leaded gloves): P/S codes AD, APD, CK, CV, EXT, FDL, FLU, IB, IE, LI, RASS/RSS, SO, WM, X0, XES, XO, XP
- D008 (leaded gloves only): P/S codes AC, AC1, AC2, ACL, AD, APD, AX, CK, CV, EDC, EOC, EXT, FDL, FLU, HRS, IB, ICP, IE, LI, ME, RASS/RSS, RD, SA, SO, STF, VS, WM, X0, XES, XO, XP
- D010 (selenium): P/S codes AD, FDL, FLU, RASS/RSS, SO, XES, ~~SP~~
- D011 (silver): P/S codes AD, APD, CK, CV, EXT, FDL, FLU, IB, IE, LI, RASS/RSS, SO, XES, XP
- D018 (benzene): P/S codes AC, AC1, AC2, SA
- D019 (carbon tetrachloride): P/S codes AD, APD, CV, RASS/RSS
- D021 (chlorobenzene): P/S code APD

- D022 (chloroform): P/S codes AC, AC1, AC2, APD, WM, X0, XO
- D035 (methyl ethyl ketone): P/S codes WM, X0, XO
- D038 (pyridine): P/S codes AC, AC2, SA
- D039 (tetrachloroethylene): P/S codes AD, APD, CV
- D040 (trichloroethylene): P/S codes ME, WM, X0, XO
- U213 (tetrahydrofuran): P/S codes AC, AC2, SA [applicability to be determined]
- No HWN: P/S codes LIBS, NCD, SMP

Process waste volume (if known):

Waste volumes for each P/S code have not been tracked. Instead, waste items are segregated into similar material types and packaged in waste containers. Waste containers are segregated into waste streams in the Sampling Plan, and waste stream volumes are reported in that document.

Years of generation for the process waste: 1979–present

PROCESS AK SUMMARY REPORT FOR MISCELLANEOUS OPERATIONS AT TA-55

1.0 INTRODUCTION

All transuranic (TRU) waste must be sufficiently characterized and certified before it is shipped to the Waste Isolation Pilot Plant (WIPP). The U.S. Environmental Protection Agency (EPA) allows use of acceptable knowledge (AK) for waste characterization. EPA uses the term AK in its guidance document, *Waste Analysis at Facilities that Generate, Treat, Store and Dispose of Hazardous Waste.* Attachment B, Waste Analysis Plan, to the *Hazardous Waste Facility Permit Issued to the Waste Isolation Pilot Plant* (EPA No. NM4890139088) (WIPP WAP) defines AK and provides guidelines on how AK should be obtained and documented.

This process AK summary report was prepared in accordance with *Acceptable Knowledge Documentation* (TWCP-QP-1.1-021). The primary purpose of this report is to systematically organize, evaluate, and summarize detailed AK information about individual processes that generate TRU waste in the Plutonium Facility at Technical Area (TA) 55, ~~used by~~ one of the TRU-waste generators at Los Alamos National Laboratory (LANL). By doing so, this report provides detailed technical support for ~~one~~ several ~~or more~~ waste stream AK summary reports that include these process wastes.

2.0 METHODOLOGY USED TO SEARCH FOR AK RECORDS

The AK search for the information related to ~~Technical Area~~ TA-55 waste streams resulting from miscellaneous (i.e., mixed oxide, uranium, analytical, and research and development) processes covered:

- Review of the *Los Alamos National Laboratory Transuranic Waste Characterization Sampling Plan* (TWCP-PLAN-0.2.7-001) (Sampling Plan) that includes information regarding all TRU waste streams

- Review of documents related to waste generation and waste management activities at TA-55 as listed on the Acceptable Knowledge Roadmap (Attachment 1)

- Interviews with personnel involved with waste generation and waste management at TA-55 as listed on the Acceptable Knowledge Roadmap (Attachment 1)

NOTE: Much of the AK information related to miscellaneous operations is contained in Transuranic Waste Characterization/Certification Project (TWCP) Record No. TWCP-3546. Individual documents in this record have been assigned a separate identifier, M-nnn, where nnn is a sequential 3-digit number. This referencing nomenclature is used throughout this report and its attachments.

- Analyses of individual processes generating waste, and evaluations of the potential for Resource Conservation and Recovery Act (RCRA)-regulated constituents to be

3.0 DESCRIPTION OF THE PROCESS WASTE

The following sections describe processes used in miscellaneous operations, and identify the resulting wastes as well as outputs that are sent to other operations, such as nitrate operations, for further processing.

3.1 Facility and Mission

The TA-55 Plutonium Facility (Building PF-4) recovers plutonium from scrap and residues generated throughout the U.S. Department of Energy (DOE) defense complex, and processes it into pure plutonium oxide for conversion to metal and other products. A LANL site map and a detailed map of the buildings at TA-55, including Building PF-4, are shown in Attachment 2.

Processes in miscellaneous operation were solely defense related (TWCP-614, TWCP-4162). However, wastes from various processes were not segregated by funding source, waste-generating process, or waste-generating location (e.g., room or glovebox) until recently (August 27, 1998), but rather were segregated and packaged based on waste type (TWCP-887, TWCP-4162, TWCP-4167). Consequently, a single waste container often contains wastes from multiple processes, including those for non-defense activities. Some debris waste was also co-mingled with room trash related to these same operations (both defense and non-defense), and was initially boxed as low-level waste. Subsequently, some of these waste boxes were returned for disposal in drums as TRU waste when on-site radioassay results showed them exceeding the low-level discard limits (TWCP-816).

Insert new Section 3.2 →

(File named Process AK section 3-2.doc)

3.~~2~~3 Waste Physical Form and Content Description

Wastes generated during miscellaneous operations, primarily debris wastes and wastes entered into the cement fixation process or sent to the Radioactive Liquid Waste Treatment Facility (RLWTF) at TA-50 are covered by this process AK report. General debris waste categories from miscellaneous operations include

- Cellulose-based waste (for example, paper, cloth)
- Plastic-based waste (for example, gloves, tape, labware)
- Rubber
- Metal debris (for example, wire, hose clamps, tools, labware)
- Glass debris

These debris waste items are contaminated with small amounts of radioactive and chemical substances. In addition to these general debris categories, miscellaneous processes also generated waste consisting of organometallic and inorganic solids of various compositions, sand and slag, ash, and crucibles.

3.~~3~~4 Waste Volume and Time Period of Waste Generation

This report covers waste streams generated from 1979, when miscellaneous processes first began at TA-55, to the present. Process wastes from miscellaneous operations have different associated EPA hazardous waste numbers (HWNs) depending on the time period during which they were generated. The P/S codes, their time period of generation, and corresponding HWNs are shown graphically in Attachment 3, Time Lines. These timelines are based on a review of procedures that guided the experimental and demonstration studies and miscellaneous research and development (R&D) operations at TA-55 and information from SMEs familiar with the operations. Many of the operations were short duration and/or changed frequently. Initiation or continuation of a process was surmised based on the date of approval for a given procedure. In some cases, a series of procedures or related documents for one process could be located to establish the timeline. In many other cases, discontinuities between procedure titles and numbers made it difficult to determine how long the process may have continued before it was modified or ended. For purposes of this report, the time period for the process is assumed to continue two years beyond the date of the last approved procedure unless otherwise indicated. Some processes have continued to the present. In cases where a given procedure did not identify the associated P/S code for the operation, a P/S code assignment was applied when the process description matched or was similar to a description in a previous or later revision of the same or a related procedure. Procedures were not available for some P/S codes (see Attachment 4). For these P/S codes, interviews with SMEs were used to develop process descriptions and timelines.

Waste volumes for each P/S code have not been tracked. Instead, waste items are segregated into similar material types and packaged in waste containers. Waste containers are assigned to waste streams in the Sampling Plan, and waste stream volumes are reported in that document.

3.~~4~~5 Waste Generation Processes

The following subsections describe the generation and disposal of waste by miscellaneous operations.

Manufacturing and research operations performed at TA-55 in the production of plutonium also generate plutonium-contaminated scrap and residues. These residues are processed to recover as much plutonium as is practical. TA-55 has extensive capabilities for the extraction and recovery of plutonium from residues and scraps generated from operations at various LANL facilities and other DOE sites. These recovery and manufacturing operations, associated maintenance operations, and TA-55 plutonium research are the sources of TRU waste generated at TA-55. Detailed information about the TA-55 plutonium recovery processes can be found in *Waste from Plutonium Conversion and Scrap Recovery Operations* (TWCP-352). A full-block flow diagram for plutonium processing and waste management at TA-55 is given in reference TWCP-886.

Research, development, and demonstration (RD&D) projects at TA-55 comprise an array of activities involving applied techniques and methods designed to study and improve processes associated with the purification, separation, extraction, recovery, and characterization of actinides (primarily plutonium) from various matrices. The nature of many of the investigations and experimental activities was such that no one detailed procedure could describe the variety of activities carried out. In many cases a definitive list of chemicals and reagents used in the investigations was not available. The process descriptions that follow are categorized by process group and are arranged within each group in approximate chronological order. A complete listing of P/S codes for miscellaneous operations, their descriptions, feed materials, and inputs and outputs is found in Attachment 4. A simplified process flow diagram for miscellaneous operations is found in Attachment 5.

3.~~4~~5.1 Extraction, Separation, and Characterization Studies (P/S Code AD)

From July 1979 until September 1994 or later, a series of similar actinide extraction, separation, and characterization R&D studies occurred in Room 208. These studies were conducted under various revisions of three series of procedures: processing of actinide hydroxide cakes from chloride and nitrate operations, development of sensors and instrumentation for online chemical analysis, and purification process development. A P/S code was not assigned to some of the earlier revisions, but is identified as P/S code AD in the latest revision of each series.

In this subsection, each revision of the hydroxide cake processing procedure is described separately because the chemical list and waste produced in the procedure differed in each revision.

- Beginning in July 1979, gloveboxes (GB) 231 and 233 in Room 208 were designated for americium R&D (M-018/TWCP-3546). These wet chemical experiments involved the use of evaporator hydroxide cake samples as the process feedstock. The process accountability flow diagram and procedures for P/S code AD do not identify the P/S codes that feed this operation; however, according to an SME (M-053/TWCP-3546) familiar with this operation, evaporator hydroxide cake samples came from P/S codes EV and HP (part of TA-55 nitrate operations). The hydroxide cake samples were dissolved in concentrated nitric acid, sampled to determine hydrogen, americium, and other principal cations, and subjected to extraction and separation phases to strip off the organics. The reagent list includes concentrated and dilute acids and caustics. Dibutyl butylphosphonate (DBBP) and kerosene were used in the extraction process.

hydroxide cake samples. The procedure indicates strip solutions and spent organics were stored but does not address ultimate disposal of these spent solutions. The process accountability flow diagram for P/S code AD indicates outputs from this operation may be sent to the vault, returned to the originating P/S code, or directed to aqueous recovery or cement fixation based on the discard limit (DL). Materials may also be sent for chemical analysis or transferred to P/S code APD for further experimental development. Assuming that evaporator hydroxide cakes comprised the primary feed material for this code, the hazardous constituents associated with the feedstock material may be concentrated in the actinide-containing matrices and solutions that are discarded as waste. Based on information presented in TWCP-AK-2.1-002,R.1 (chloride operations) and TWCP-AK-2.1-005,R.1 (nitrate operations), hydroxide cakes may contain the D-listed heavy metals cadmium (D006), chromium (D007), lead (D008), mercury (D009), and silver (D011).

3.~~4~~5.2 Halogenation Studies (P/S Codes CK, CV, FDL, FLU, IE, LI, SO)

A variety of halogenation (chlorination and fluorination) studies were conducted in various rooms and gloveboxes in Building PF-4, Rooms 105, 106, 113 and 208, from March 1988 to October 1992. Brief descriptions of these related operations are provided below. Standard debris waste items that were generated from these operations included rags from general clean-up, miscellaneous tools, labware (glass, plastic, or metal), typical glovebox operations waste; additional types of wastes are listed with each process description.

R&D efforts utilizing fluorinating agents to fluorinate ash samples containing plutonium residues were conducted in Room 105, GB-177, beginning in March 1988 under P/S code SO. A gas flow loop was used to pass a fluorinating agent through a gas-solid reactor where plutonium in the solid residue reacted chemically to form solid PuF_4 or gaseous PuF_6 (M-007, M-008/TWCP-3546). Gaseous PuF_6 was trapped in a cold trap, distilled, and reduced to PuF_4. This process was similar to that used in P/S codes FLU and CK (described later in this section) insofar as they all involved related functions (i.e., extraction of plutonium from various matrices), but each process used a slightly different approach (M-035/ TWCP-3546). Chemicals used in this process included fluorine and various halogen fluorides, aluminum oxide, and sodium bicarbonate. The feed material was ash generated in the incinerator (P/S code IS) and that had passed through the rotary calciner (P/S code RC) (M-053/ TWCP-3546). Raw ash from the incinerator contains the RCRA-listed heavy metals barium (D005), cadmium (D006), chromium (D007), lead (D008), and silver (D011) in concentrations exceeding the Toxicity Characteristic Leaching Procedure (TCLP) limits. Calcined ash also

waste included trace carbon tetrachloride from reagent bottles. Carbon tetrachloride was used as a chlorinating compound in the reaction loop and would have been completely reacted in the chlorination process (M-035/TWCP-3546). Because carbon tetrachloride was not used as a solvent or degreaser, the F-listing for carbon tetrachloride is not applicable. Process outputs from this operation may have been sent to the vault via the countroom, returned to the originating P/S code, or transferred to aqueous recovery or cement fixation (based on the DL). Sub-accountable samples may have been sent to chemical analysis.

A small-scale research operation involving gas-solid and solid-solid fluorination and chlorination chemistry began in March 1992 in Room 113, GB-117 and 179, under P/S code FLU (M-012/TWCP-3546). The process, materials, and chemicals used in this operation were similar to those used in P/S codes SO and CK because they all involved related functions (i.e., extraction of plutonium from various matrices) although each process used a slightly different approach (M-035/ TWCP-3546). The process feedstock (ash) was generated in P/S code IS and also passed through the rotary calciner (P/S code RC) (M-053/TWCP-3546). Raw ash from the incinerator contains the RCRA-listed heavy metals barium (D005), cadmium (D006), chromium (D007), lead (D008), and silver (D011) in concentrations exceeding the TCLP limits. Calcined ash also contains these metals (except silver) above the TCLP limits. The process accountability flow diagram indicates that process outputs are sent to the vault or the originating P/S code. Some items were sent to CLS-1 for analysis. No organic chemicals are listed in the procedure. In addition to standard debris waste, other process wastes included used vacuum pump oil, and heating mantles. Hazardous constituents are not expected to be present in these waste items.

3.~~4~~5.3 Non-Aqueous Dissolution/Extraction Operations (P/S Codes AC, AC1, AC2, AC3, AX, SA)

Several non-aqueous dissolution/extraction operations occurred in Building PF-4 beginning in 1989 and continuing at least until 1994. These operations are described below.

In January 1989, research operations in Room 208, GB-203, involved the dissolution of actinide compounds and actinide-containing matrices in superacid media. (M-004/TWCP-3546). The superacid solutions were evaporated to leave solid products that were analyzed by a variety of methods. Chemical use included anhydrous hydrofluoric acid, antimony pentafluoride, HSO_3F, hydrofluoric acid, and "other superacid solvents" (which are not specified in the procedure). The P/S code for this operation is not identified in the procedure but the process description is

rinsed

would be in the neutralized acidic solutions or in the rinse solutions and hence

AC1 and AC2 were that AC1 was an analytical process using aqueous compounds, predominantly dilute nitric, hydrochloric, and perchloric acid solutions. These acidic solutions would have been neutralized and precipitated to recover the plutonium. Solutions were sent to cementation. The solids were ~~wrung~~ from rags with water before ~~they~~ rags were discarded. Any perchloric salts were sent to cementation. P/S code AC2 involved synthesis of (air-sensitive) new compounds in an inert glovebox. This was a non-aqueous process. P/S code AC3 is not related to P/S codes AC1 or AC2, but is predominantly a metal operation (M-038/TWCP-3545). This code had not yet become active by the time this report was prepared, and no other information was available for it.

pyridine

The procedure describes operations that comprise a broad range of laboratory activities in support of fundamental and applied actinide chemistry research (M-025/TWCP-3546). These activities include, but are not limited to, preparation of solvents and reagents, synthesis of new chemical compounds, and characterization and analysis of new chemical compounds using wet chemistry methods and analytical instrumentation. The chemical list indicates the use of a variety of materials, including organic solvents (e.g., toluene and benzene), alkaline earth metals, and transition metals. The SMEs (M-038/TWCP-3546) familiar with these activities indicated that a "variety of aromatic, alkaline, and chlorinated solvents" (e.g., tetrahydrofuran, toluene, benzene, methylene chloride, and chloroform) were used in these activities. Hexane and acetonitrile began to be used in P/S code AC2 recently. Acetonitrile is an Ap. VIII VOC, but its HWN (U003) does not apply in this case. These organic chemicals have the following HWNs: benzene (D018, F005), chloroform (D022), methylene chloride (F002), tetrahydrofuran (U213), and toluene (F005). The SME stated that waste byproducts from the operations that contain these constituents were not discarded but were held in the glovebox for reprocessing or recovery. Because the SME was not involved with these activities after 1994, he was unable to definitively state how the waste materials were ultimately dispositioned. In a later discussion, other SMEs (M-038/TWCP-3546) indicated that use of the chlorinated solvents associated with P/S code AC1 was discontinued in 1994 and that items contaminated with these constituents mentioned are still in the glovebox and have yet to be discarded as of the date of this report. Transition metals used as reagents in the synthesis of new materials in this process included sodium salts, potassium salts, and silver salts. The precipitated salt byproducts also were not discarded but were held in the glovebox for reprocessing and recovery. In a later discussion, other SMEs confirmed that silver salts associated with P/S code AC1 are still in the glovebox awaiting determination for a path forward for disposition. Other than silver (D011), no RCRA metals were used in the processes (M-038/TWCP-3546). In addition to the standard debris wastes, process wastes may have included reaction by-products

Add pyridine?

and residues, heating mantles, vacuum pump apparatus, various pieces of laboratory equipment, spent organic solvents, and filtration media. Process outputs for both P/S codes may be sent to the vault, returned to the originating P/S code, or transferred to aqueous recovery or cement fixation (based on the discard limit).

P/S code AX was related to the dissolution of actinide compounds in superacid media but involved the assay of plutonium in nitric or hydrochloric acid solutions. This operation occurred in Rooms 401, 409, and 420. The procedure was initiated in 1988 and revised in 1989 (M-005/TWCP-3546). Assay solutions were accumulated for transfer to P/S code CX (in chloride operations) or P/S code RR (in nitrate operations). The use of RCRA solvents is not indicated in the procedure.

3.~~4~~5.4 Analytical Operations (P/S Codes ACL, ICP, XP)

P/S code ACL is an umbrella operation that covers all analytical techniques performed in Room 124 (M-042/TWCP-3546). This P/S code began in the 1980s and continues to the present. Processes under this P/S code involve analysis of plutonium and americium, RCRA metals, and trace metals. Originators provide samples, which are prepared for further analyses (e.g., ICP and XES). Analytical preparation may involve the use of nitric acid solutions. Unused liquid samples are returned to the originator, sent to radiochemistry for counting, or sent to recovery operations if established discard limits are exceeded. Discardable wastes (based on discard limits) are disposed to the acid waste line. Some solid wastes (i.e., residues from chromatography) are collected, counted, and sent to recovery operations if the plutonium concentration exceeds the discard limit.

P/S code ICP is one of the plutonium analytical techniques associated with P/S code ACL (M-042/TWCP-3546). This process takes place in Room 106, GB-188 and began in 1987/88. Although still active, this P/S code will eventually be replaced by P/S code ACL.

P/S code XP involved several small-scale R&D efforts primarily focused on plutonium recovery (M-049/TWCP-3546). Operations were conducted in Room 208, GB-227, 228, and 229. This P/S code began in March 1986 and ended in May 1990. It included the following activities:

- Fluoride sintering of PuO_2 took advantage of the presence of fluoride to aid the formation of a sintered mass of PuO_2 powder at temperatures above 700°C. Process inputs did not involve constituents that would result in the generation of RCRA hazardous waste (M-049/TWCP-3546).

- Chlorination of Pu oxides involved oxides with tantalum chips from Rocky Flats Environmental Technology Site (RFETS). Chlorination was used to recover plutonium from potassium chloride and sodium chloride matrices. Process inputs did not involve constituents that would result in the generation of RCRA hazardous waste (M-049/TWCP-3546).

- Processing of molten salt extract (MSE) salts generated at LANL and RFETS did not involve constituents that would result in the generation of RCRA hazardous waste (M-049/TWCP-3546).

- Recovery of plutonium from ash involving plutonium/thorium oxide mixtures generated ash residues that are likely to contain a variety of contaminants, including RCRA heavy metals such as cadmium, chromium, and lead (M-049/TWCP-3546). The ash was sent to recovery and ultimately cemented. The feed material was ash generated in the incinerator (P/S code IS) and that had passed through the rotary calciner (P/S code RC) (M-053/TWCP-3546). Raw ash from the incinerator contains the RCRA-listed heavy metals barium (D005), cadmium (D006), chromium (D007), lead (D008), and silver (D011) in concentrations exceeding the TCLP limits. Calcined ash also contains these metals (except silver) above the TCLP limits.

- Processing of neptunium oxide and metal was performed to remove the protactinium daughter in order to use the neptunium for non-destructive assay (NDA) standards (M-049/TWCP-3546).

Waste from P/S code XP included standard debris items associated with laboratory operations and glovebox maintenance, as well as lead shielding. Phosphine oxide was used as the extracting/complexing agent and diisopropyl benzene, CMPO, and DHDCMP mixtures were used as diluents for processes involving solvent extraction of plutonium leached from a candidate matrix.

5
3.~~4~~.5 Measurement/Detection Operations and Studies (P/S Codes EOC, HRS, LIBS, RASS/RSS, SMP, VS, XES)

P/S code VS took place in Room 209, GB-210, and involved the inspection of high-purity oxides and metals to verify the inventory in the vault (M-045/TWCP-3546). Materials were retrieved from the vault, brought to the glovebox, inspected, assayed by a non-destructive method, sampled if necessary for chemical analysis (under different P/S codes), then repackaged if necessary, and returned to the vault. Waste from this activity would include vials if the inspected material were sampled, and plastic (from the bagout process). No other materials or

sample and to analyze its surface characteristics (M-015/TWCP-3546). Mixtures of helium and nitrogen are passed through a U-shaped cell containing a sample to be analyzed. Solvents or chemicals other than nitrogen and helium are not indicated in the reagent list or mentioned in the text of the procedure. The operation might still be active (M-040/TWCP-3546). Process outputs from this operation may be sent to the vault, returned to the originating P/S code, or transferred to aqueous recovery or cement fixation (based on the discard limit).

P/S code HRS involved spectroscopic studies in Room 105, GB-189 and 190, from January 1987 through March 1995 (M-036/TWCP-3546). Fluorinated actinide compounds were introduced with compressed gases into a long-path, variable temperature cell for spectroscopic measurement and in preparation for physical chemistry (M-023, M-036/TWCP-3546). RCRA-regulated constituents were not indicated as being used. Process outputs, which were the experimental items used for analysis, are expected to have been the same as the process inputs; therefore, no RCRA or other waste constituents of concern were involved.

3.~~4~~5.6 Pyrochemical Matrix Studies (P/S Codes IB, EXT, STF)

A pyrochemical matrix study was conducted from May 1986 through February 1995 in Room 208, GB-264. The process was initiated under P/S code IB (Incoming Oxide Blending) in May 1986 (M-039/TWCP-3546). From 1986-1992, the process involved rod milling prior to screening (M-030/TWCP-3546). This process had two objectives: (1) blending large batches of homogeneous plutonium metal oxides (up to 85 percent purity) for pyrochemical operations, and (2) dissolution of 78 percent pure (or greater) plutonium metal oxides for nitrate operations (M-039/TWCP-3546). The materials or impurities in oxides destined for dissolution consisted of high iron, chromium, and halide salts; therefore, this accounted for the sources of chromium in the evaporator bottoms.

The process changed in August 1992 to become the Matrix Study of Pyrochemical Salts when a need developed to blend oxides to provide feed material for P/S codes RB and RBJ to make NDA standards. This activity continued until February 1995 when the process became P/S code STF, which is still an active code conducted in Room 126, GB-138 and 139. The objective of this activity was to determine the effect of pyrochemical salt matrices on the accuracy of NDA measurements (M-029/TWCP-3546). Process activities involved crushing, pulverizing, blending, roasting, and sieving pyrochemical salts. The results were used to determine handling and processing of the salts and for correction of bias measurements. The feed material consisted of high-purity oxides to

use in the fabrication of standards to be used at LANL and throughout the DOE complex (M-039/TWCP-3546). Waste forms included a stainless steel capsule used to contain the standard, and stainless steel cans (similar in size to a paint can) used to contain the oxides. The process did not use or generate wastes containing liquids, solvents, organics or metals (except the stainless steel). Waste included typical glovebox maintenance items (e.g., cheesecloth, rags, HEPA filters, glovebox windows, gloves). Process outputs from this operation were sent to the vault.

P/S code EXT was a small basic research operation that began in March 1992 in Room 106, GB-180. This research effort explored aqueous extraction of plutonium from various waste streams, particularly used pyrochemical salts (M-013/TWCP-3546), using acids and bases. The procedure does not indicate the use of any RCRA-listed chemicals. Wastes from this operation would include rags and paper products from general clean-up; labware that may include glass, plastic, or metal; heating mantles, and spent pyrochemical salts. The process accountability flow diagram and procedures for this process do not identify the P/S codes that fed this operation. Spent pyrochemical salts contain barium (D005), cadmium (D006), chromium (D007), lead (D008), and silver (D011) at concentrations that depend upon the process that generated the salt. Concentrations of RCRA heavy metals are below regulatory limits for pyrochemical salts from direct oxide reduction (P/S code OR) (TWCP-2540), but concentrations are not known for pyrochemical salts from salt stripping (P/S code SS) or special processes (P/S code PX). Residues from the solution extraction process were sent to the vault via the countroom, returned to the originating P/S code, or transferred to chloride (P/S code CX) or nitrate (P/S code CF) operations. The D-listed constituents would carry through to subsequent treatment processes. Solutions were transferred to chloride (P/S code CX) or nitrate (P/S code CF) operations, or were disposed to the acid waste line if the solutions met the waste acceptance criteria for the RLWTF at TA-50.

3.~~4~~5.7 Hydrothermal Processing (P/S Code APD)

P/S code APD was a hydrothermal processing procedure initiated in March 1996 in Room 208, GB-230 (M-001/TWCP-3546). The operation involves the reaction of aqueous/organic mixtures, pure organic liquids, or contaminated combustible solids (e.g., ion exchange resins, plastic filters, and cellulose rags) under supercritical conditions (i.e., high temperature and pressure). Feed streams include, but are not limited to, analytical laboratory solutions that may contain carbon tetrachloride, tributyl phosphate, and organic solvents (unspecified in the procedure), as well as lead and mercury (Cl-25/TWCP-3547). Process effluents are

gases, liquids and salts. Organic components are oxidized to carbon dioxide. Nitrate contaminants are converted to nitrogen gas and some nitrous oxide. Components such as chlorine, sulfur, and phosphorus are oxidized and converted to acids or salts. Gases are liberated; solids and liquids are collected for recovery or disposal.

The types of chemical wastes generated by hydrothermal processing experiments are predominantly effluents and rags. Hazardous organic constituents, including carbon tetrachloride, are probably destroyed by the hydrothermal process (M-034/TWCP-3546); therefore, organic RCRA-listed constituents in the feed streams would not be expected to be present in the resulting debris waste. Rags contaminated with carbon tetrachloride that were not processed through the hydrothermal reactor would be assigned the hazardous waste code D019. Hazardous inorganic constituents (i.e., RCRA metals) would not be present in the waste (M-034/TWCP-3546) other than any heavy metals present in the feed solutions (e.g., D008 and D009). Process outputs from this operation may be sent to the vault, returned to the originating P/S code, or transferred to aqueous recovery or cement fixation (based on the discard limit). Materials may also be sent to Actinide Chemistry R&D (P/S codes AC1 or AC2) or Raman Spectroscopy (P/S code RASS/RSS) for quantification.

3.~~4~~5.8 Electrochemistry Experiments (P/S Code EDC)

Under P/S code EDC, various electrochemistry R&D experiments were conducted in Rooms 105, 106, 112, 208, 209, and 210 in December 1995. Electrochemistry methodologies were designed to decontaminate items, replace processes that produce large amounts of waste, or enhance chemical reactions (M-014 and M-031/TWCP-3546). Electrolytes were typically inert nonhazardous salts. Process inputs were from the vault or metallurgy operations. The process involved uranium decontamination of disassembled weapon components from various sites with various levels of surface contamination with plutonium (M-041/TWCP-3546). The operation was strictly an aqueous process in which an alkaline solution was reacted with the components to precipitate uranium. A stainless steel cathode was used; therefore, corrosion was not an issue and the electrolyte was not degraded. Significant amounts of metal could be stripped in a short period of time. The precipitated solution comprised either uranyl hydroxide or uranyl sulfate, which was then dried for mass balance. The distillate contained small amounts of uranium. Rinse water was discarded to the industrial caustic waste line. RCRA metals would be present in the waste stream but the SME stated that there are "reams of analytical data" to support that RCRA metals are below regulatory threshold limits. However, to be conservative, it is assumed that chromium (D007) could be present in the sand and slag removed during

this process (M-031/TWCP-3546). Outputs from the process are directed to the vault or nitrate recovery operations (P/S code CF).

5
3.~~4~~.9 Metallography (P/S Code ME)

P/S code ME takes place in Room 115 and involves a standard metallography process that was initiated at TA-55 in 1979 and continues to the present (M-048/TWCP-3546). The purpose of the metallography operation is to characterize the microstructure of metallic or ceramic pieces to verify and establish the quality and effectiveness of welds. Materials examined under this P/S code consist of plutonium and uranium carbides, nitrides, and oxides, as well as zirconium and tantalum alloys, and stainless steel. Metal pieces (pellets) are cut with a diamond saw. Ceramic pieces are subjected to grinding with standard metal grinding media (e.g., papers impregnated with silicon carbides and diamond). The materials are polished with several different chemical compounds. Prior to May 1992, a mixture of 1–10 percent trichloroethylene and kerosene were used. Ethanol and acetone may also have been used. After May 1992, these materials were replaced with a mineral oil and a derivative from orange peels. The polishing compounds were not used for their solvent properties, but rather for their cooling and lubricating properties. Little liquid waste is generated from the process. The trichloroethylene/kerosene mixture and the alcohols largely evaporated during the polishing process. Waste trichloroethylene and kerosene was accumulated, absorbed onto vermiculite, and discarded in 55-gallon drum.

Metal or ceramic pieces are cleaned with alcohol and etched with various kinds of acid or caustic etchants, which are reused as much as possible. Waste etchants are neutralized; however, their disposal path is uncertain. Analytical data for some of the etchant residues indicated that these residues did not contain excessive concentrations of RCRA constituents; consequently, waste from this process is documented on Chemical Waste Disposal Records as "non-RCRA."

Beryllium and chromium (from the stainless steel) would be present in the grindings. However, the beryllium is not in a form that is RCRA regulated. Other waste includes standard glovebox maintenance items (e.g., rags, glovebox gloves, and HEPA filters), and a large volume of grinding paper. Although generally the gloves were not leaded, leaded gloves are used at the grinding station and for the last 3-4 years only at one glovebox.

5
3.~~4~~.10 Waste Management Operations (P/S Codes NCD, RD, WM, X0, XO)

P/S code RD was used only in 1984–1986 in Room 432 (M-046/TWCP-3546). This P/S code allowed for tracking of demonstration drums (one

drum each year) that were packaged and prepared in accordance with the TA-55 Attachments to the *Certification Plan* (TWCP-701) to meet the WIPP requirements at that time. Packaging of these drums did not of itself result in the generation of TRU waste. The SME stated that the waste drums that were packaged contained non-mixed TRU waste.

Operations under P/S code NCD occurred during the period from April 1989 – April 1991 in Room 432 (M-046/TWCP-3546). This P/S code was established to provide a mechanism for dealing with TRU drums that did not confirm specifications (e.g., recorded weight or nuclear material content). Non-confirming drums were temporarily set aside under this P/S code until such time as personnel could reprocess them under P/S code WM to correct the nonconfirming condition. After April 1991, nonconfirming drums were dealt with immediately, and P/S code NCD was no longer needed.

According to an SME (M-046 and M-050/TWCP-3546) who researched the assignment of waste to P/S codes WM, XO, and X0, P/S code WM is currently limited to waste that arises from the TRU solid waste management operation in Room 432. This situation has been the case since the beginning of 1993. Room trash boxes from Building PF-4 have always been handled as low-level waste; however, the boxes were assayed to verify contamination levels and any that were determined to be TRU waste were diverted to Room 432 for repackaging as such. From May 1987 through 1992, these boxes were created as P/S code XO or X0. These codes were changed to P/S code WM after 1992. Additional controls were placed on room trash after 1992. Trash was assayed with the Multiple Energy Gamma Assay System (MEGAS). When a container was rejected on the basis of MEGAS data, the rejected container was returned to the originator for removal of any "hot" item(s). This process also allowed for greater control to prevent discarding regulated materials (e.g., RCRA constituents) in room trash. Hence, no HWNs apply to waste from P/S code WM after 1993.

The designations for P/S codes XO and X0 are based on the following distinctions:

- P/S code X0 was designated for waste materials that could not be associated with a specific room, such as a hallway, mezzanine offices, rest rooms and change rooms, basement, pump rooms, and trolleys. The waste from all these areas, except the pump rooms and trolleys, would be low-level waste and no RCRA constituents would be associated with the waste items.

- P/S code XO indicated waste materials that were generated within specific rooms but could not be associated with an individual P/S code in that room. The room trash boxes assigned this P/S code,

when determined by assay to qualify as TRU waste instead of low-level waste, could contain rags that had contacted ignitable constituents (e.g., ethanol, isopropyl alcohol, and hexane); however, because the waste items were not packaged as free liquids, the EPA HWN D001 for ignitability would not be applicable. Other constituents that may have been present on rags in debris waste from P/S code XO included the degreasing solvents methyl ethyl ketone (D035, F005), trichloroethylene (D040, F001, F002), and 1,1,2-trichloro-1,2,2-trifluoroethane [freon] (F001); methylene chloride (F002) used as a paint stripper until after 1999; and chloroform (D022) used in a cryogenic bath. XO switched to non-RCRA regulated paint strippers after 1999: Citrapeel until 2001, and Organicstrip at the present time.

Because of the difficulty in distinguishing XO from XO in waste generator records, in order to be conservative all HWNs applicable to XO are also applied to XO if it is indicated to contain TRU waste.

Two other specific situations could also result in the generation of additional waste items under P/S code WM.

- During maintenance of the in-line glove box, changeout of the leaded gloves and windows would be covered under P/S code WM. No solvents or other chemicals were introduced during this routine maintenance activity.

- A spill in Room 432 in 1989 involved the release of a Pu-239-contaminated solution (consisting primarily of water with a minor amount of nitric acid) from a ventilation line. The spill was wiped up with rags and discarded under P/S code WM. Rags with excessive amounts of nitric acid would have been neutralized by dipping them in a calcium hydroxide solution inside a glovebox. No EPA HWN would be applicable to waste from this incident.

3.~~5~~6 Material Inputs to the Waste Generation Process

Attachment 4 lists P/S codes for miscellaneous operations at TA-55, including process descriptions, feed material, other process inputs, process outputs, and type of waste. The feed materials for miscellaneous operations consist of the general types of materials listed in Table 1 that are obtained from the storage vault, as process output from other P/S codes, or from sources outside TA-55, including other DOE sites:

The remainder of this section summarizes the nature of the process waste in terms of its physical, chemical and radioisotopic characteristics.

3.~~5~~6.1 Physical Waste Form Identification

Solid waste from miscellaneous operations primarily consists of debris waste, as well as cemented waste discarded under P/S codes CF or HP. Debris waste contains glassware, plastics, ceramic materials, paper, rags,

HEPA filters, metal containers, brushes, and small tools. Leaded gloves are also generated as process waste. Prior to 1987, leaded gloves were discarded in the combustible and non-combustible debris waste streams. Between 1987 and May 1992, leaded gloves were segregated from combustible debris and discarded in the metal debris waste stream because of concern that explosive lead oxides might form if the combustible debris waste was incinerated. Since May 1992, leaded gloves have been routinely segregated from other metal debris waste and assigned to a separate leaded-glove waste stream.

Because items from several different processes are usually combined into individual waste drums, the physical waste form of each drum must be determined independently. This information is documented on a Waste Origination and Disposition Form (WODF) by the waste generator according to controlled procedures. The P/S code for each waste item is also documented on this form. In the packaging process, a standard form, the Discardable Waste Log Sheet (DWLS), was used to list each item ID number and record its matrix material. This form was signed by the waste packager, reviewed, and approved by quality assurance (QA) personnel.

3.~~5~~6.2 Radionuclide Content Identification

The primary plutonium material type inputs for miscellaneous operations at TA-55 are listed in Table 2, and uranium material types are listed in Table 3. The designation *material type* (MT) (e.g., MT 52) is used within the DOE Complex to describe the isotopic composition of common blends of radioactive materials used within the Complex. The material type notation was developed because it is a convenient way to describe material types that have very consistent isotopic compositions. Tables 2 and 3 indicate the isotopic composition of the material types at the time the waste was characterized.

The plutonium material type provides the basis for estimating an upper bound for U-234, U-235, and Am-241 contents based on the rate of decay of their precursors, Pu-238, Pu-239 and Pu-241, respectively. * These bounding calculations provide a basis for identifying enrichment or depletion of one radionuclide versus another based on radioassays of individual waste containers. The results of these calculations are also tabulated in Table 2, assuming (a) none of these isotopes were initially present in the material, (b) the oldest Pu material in inventory dates back to 1 January 1960, and (c) the waste was packaged on 1 January 1996, making it 36 years old (TWCP-698).

start

The material type used in the process generating each waste item was documented on the WODF and DWLS. However, some of the

*Insert above

Table 2. Average Isotopic Content of Plutonium Material Types and Enrichments

Material Type (MT)	Plutonium Isotope (Weight %) and Half-Life						Upper Bounds for Dimensionless Weight Ratios[a]		
	Pu-238 (87.74 yr)	Pu-239 (24120 yr)	Pu-240 (6564 yr)	Pu-241 (14.35 yr)	Pu-242 (376,300 yr)	Pu-244 (8.26 x 10^7 yr)	U-234/ Total Pu	U-235/ Total Pu	Am-241/ Total Pu
MT 51	0.006	96.77	3.13	0.076	0.018	—	1×10^{-5}	0.001	0.0006
MT 52	0.01	93.78	6	0.2	0.02	—	2×10^{-5}	0.001	0.002
MT 53	0.03	91.08	8.45	0.366	0.071	—	7×10^{-5}	0.0009	0.003
MT 54	0.046	87.42	11.5	0.81	0.22	—	0.0001	0.0009	0.007
MT 55	0.06	83.88	14.73	1.03	0.304	—	0.0002	0.0009	0.009
MT 56	0.061	81.9	16.51	1.18	0.355	—	0.0002	0.0009	0.01
MT 57	0.433	74.63	20.7	2.55	1.69	—	0.001	0.0008	0.02
MT 42									
84%	1.02	1.37	10.32	3.13	84.14	0.02	0.003	1×10^{-5}	0.03
90%	0.72	1.26	6.4	1.86	89.77	—	0.002	1×10^{-5}	0.02
95%	0.45	0.56	2.47	0.906	95.58	0.029	0.001	6×10^{-6}	0.008
MT 83									
83%	83.89	13.8	1.9	0.32	0.09	—	0.26	0.0002	0.003
89%	89.26	10.07	0.633	0.021	0.015	—	0.28	0.0001	0.0002

a These ratios are calculated under the assumption that no chemical fractionation occurs and, hence, are intended to be used to identify fractionation when it is present by comparing these upper bounds to radioassay data.

Source: TWCP-698

Table 3. Average Isotopic Content of Uranium Material Types and Enrichments (Weight %)

Material Type	U-234	U-235	U-236	U-238
MT 12	0.0015	0.23	0.008	99.77
MT 35	0.36	37.6	0.14	61.9
MT 36	0.63	62.44	0.18	36.75
MT 38	1.03	93.04	0.41	5.53
MT 39	1.32	97.52	0.17	0.99

Source: TWCP-698

isotopes could be the dominant radionuclides in some waste items due to their occasional use as primary feed materials in P/S codes such as AD, CV, EXT, HRS, RASS, SA, XES and XP.

Americium or neptunium ~~and~~ ~~Other~~ ~~other~~ ~~radionuclides~~ ~~present in the waste items due to the~~ ~~processing~~ ~~as feed materials, other than Pu (TWCP-698).~~ ~~Additional radionuclides expected to be present in each process were reviewed by a panel of experts at TA-55 and compiled in a memo according to P/S code (TWCP-882). This for miscellaneous operations, list includes americium isotopes~~

plutonium recovery processes separate plutonium and americium, or plutonium and uranium, so that their relative ratios may be altered in the process outputs and wastes. Waste items may be either depleted or enriched in ~~americium~~ Am-241 or U-234, depending on whether the source of contamination is the process product or the process residues (TWCP-882).

Residues submitted for reprocessing often contain Np-237, the decay product of Am-241 (half-life, 458 yr). This radioisotope is expected to be present in minor amounts in nearly all debris waste from miscellaneous operations at TA-55.

In general, uranium and its isotopes are expected to be present only at trace levels, if at all, unless the feed material is uranium (such as dissembled weapons components, including uranium, in P/S code EDC). For plutonium feed materials, U-235 in growth from the decay of Pu-239 (half-life, 24,120 years) would be negligible due to the long half-life of Pu-239. U-234 would be present in MT 83 as a decay product of Pu-238 (half-life, 87.74 years). After 20 years, 14.6 percent of the initial Pu-238 would have decayed to U-234. For MT 83 with an initial content of 83.89 percent Pu-238, the atomic ratio U-234 to total Pu would be about 0.14. ~~No U-236 is present~~ Pa-231 and Cs-137 may be present in trace amounts due to their widespread presence as contaminants in TA-55 operations (TWCP-5164, TWCP-5165). During TWCP characterization, the contents of each waste package undergo non-destructive analysis to provide detailed radioisotopic data. These data will be used to evaluate the accuracy of AK information in accordance with *Waste Characterization Data Reconciliation with Acceptable Knowledge* (TWCP-DTP-1.2-064). If warranted, this AK report will be updated to incorporate the results of these comparisons.

3.6.3 Chemical Content Identification

Chemical inputs to miscellaneous operation processes are listed in Table 4. In section 4, these inputs are evaluated along with constituents present ~~in the~~ feed materials and equipment in order to determine to applicability of ~~EOA~~ EPA HWNs to process waste for each P/S code.

4.0 ASSIGNMENT OF EPA HAZARDOUS WASTE NUMBERS

The assignment of EPA HWNs to process wastes from miscellaneous operations is summarized in the text below, as well as in Table 5, on the process timelines in Attachment 3, and in the table of process inputs and outputs in Attachment 4. These assignments take into account the possible presence of RCRA chemicals in process waste as a result of their suspected or known presence in feed materials, chemical inputs, equipment, and glovebox surfaces.

Chemical input	P/S Codes in which RCRA-Listed Chemicals Are Used	Comments on Applicability of EPA HWN
Potassium permanganate		
Potassium salt (not specified)		
Silver salt	AC1	D011
Sodium bicarbonate		
Sodium carbonate		
Sodium chloride		
Sodium chlorite		
Sodium nitrate		
Sodium salt (not specified)		
Sodium sulfate		
Thorium oxide		
Metals		
Alkaline earth metals		
Bismuth-tin alloy		
Gallium metal, oxide or salt		
Lanthanide metals		
Platinum and platinum-rhodium alloys		
Stainless steel		D007 (chromium)
Tantalum metal, oxide or salt		
Zirconium and tantalum alloys		
Organic Chemicals		
1-propanol		
Acetone	ME	F003
Acetonitrile	AC2	Appendix VIII compound. EPA HWN U003 does not apply due to the manner in which this chemical is used in TA-55 processes.
Alkylating agents (unspecified)		
Benzene	AC/AC1/AC2, SA	D018 and F005: solvent use
Carbon tetrachloride	AD, CV	D019 applies to AD and CV. F001 does not apply because this chemical was not used for degreasing.
Carbon tetrafluoride		
Chloroform	AC/AC1/AC2, APD, XO	D022
Citrapeel		
DBBP (dibutyl butyl-phosphonate)		
DBBP (dibutyl butyl-phosphonate) / Isopar (isoparaffinic hydrocarbon solvent)		
Diethyl ether	SA	F003
Dihexyl N,N-diethylcarbamoylmethyl phosphonate (DHDCMP)		
Diisopropyl benzene		
Ethanol		
Hexane		
Hydrazine dihydrochloride		
Hydrazine hydrochloride		
Isopropanol		
Kerosene		

indent to indicate this is a continuation of the above line

Chemical input	P/S Codes in which RCRA-Listed Chemicals Are Used	Comments on Applicability of EPA HWN
Methanol	AD, SO	F003 applies to AD because methanol may have been used for cleaning inside the glovebox. F003 does not apply to SO because methanol was used in a cold trap outside the glovebox.
Methylene chloride (also called dichloromethane)	AC1, SA	F002 applies to P/S codes AC1 and SA because methylene chloride was used for solvent properties.
n-dodecane		
Octylphenyldiisobutyl-carbamoylmethylphosphine oxide (CMPO)		
Organicstrip		
Perchlorocarbons		
Phosphine oxide		
Phosphines		
Pyridine	SA, AC, AC2	D038, F005: used as solvent in organometallic synthesis process.
Sodium dithionate		
Tetrachloroethylene	AD, APD, CV	D039 and F002 apply to AD and APD. However no codes apply to CV because this chemical was only used as a coolant outside the glovebox.
Tetraethylamine hydrochloride		
Tetraethylamine hydroxide		
Tetraethylammonium hydroxide		
Tetrahydrofuran	AC, AC2, SA	U213 may be applicable ~~applies~~ to AC, AC2, and SA
Thionyl chloride		
Toluene	AC, AC2, SA	F005 applies because toluene was used as a solvent in organometallic synthesis
Tributyl phosphate (TBP)		
Tributyl phosphate (TBP)/Isopar		
Trichloroethylene	CK, ME, XO	D040 applies to P/S codes ME and XO; F002 also applies to P/S code XO. Neither EPA HWN applies to P/S code CK because this chemical was used as a coolant outside the glovebox.
Vacuum pump oil		

indent to indicate this is a continuation of the above line

Table 5. Evaluation of the Applicability of EPA Hazardous Waste Numbers to Processes Discussed in This Report

(applicability of U213

P/S Code	Description	Potential EPA Hazardous Waste Numbers (HWNs)			Applicable HWNs
		Due to Feed (from Table 1 and text)	Due to Chemical Use (from Table 4)	Due to Process*	
AC	Actinide Chemistry, R&D	None	D011, D018, D022, F002, F005, U213	D007, D008, D009	D007, D008, D009, D011, D018, D022, F002, F005, ~~U213~~ (to be determined)
AC1	Actinide Chemistry, R&D	None	D011, D018, D022, F002, F005	D007, D008, D009	D007, D008, D009, D011, D018, D022, F002, F005
AC2	Actinide Chemistry, R&D	None	D011, D018, D022, F002, F005, U213	D007, D008, D009	D007, D008, D009, D011, D018, D022, F002, F005, ~~U213~~ (to be determined) applicability of U213
AC3	Actinide Chemistry, R&D	None	None	None	None
ACL	Analytical Chemistry Laboratory	None	None	D007, D008, D009	D007, D008, D009
AD	Actinide Processing Demonstration	D004, D005, D006, D007, D008, D009, D010, D011, D019	D008, D019, D039, F002, F003	D007, D008, D009	D004, D005, D006, D007, D008, D009, D010, D011, D019, D039, F002, F003
APD	Actinide Processing Demonstration	D008, D009, D019, D021, D022, D039, F002, F003	None	D007, D008, D009	D007, D008, D009, D019, D021, D022, D039, F002, F003
AX	Solution Assay	None	None	D007, D008, D009	D007, D008, D009
CK	RD&D Volatile Fluoride Pu Recovery	D005, D006, D007, D008, D011	None	D007, D008, D009	D005, D006, D007, D008, D009, D011
CV	R&D Experimental Chlorination Processes	D005, D006, D007, D008, D011	D019, D039	D007, D008, D009	D005, D006, D007, D008, D009, D011, D019, D039
EDC	Electrolytic Decontamination	D007	None	D007, D008	D007, D008
EOC	Experimental Oxide Characterization	None	None	D007, D008, D009	D007, D008, D009
EXT	Extraction RD&D	D005, D006, D007, D008, D011	None	D007, D008, D009	D005, D006, D007, D008, D009, D011
FDL	FOOF Demonstration Loop	D005, D006, D007, D008, D011	None	D007, D008, D009	D005, D006, D007, D008, D009, D011
FLU	Fluorination RD&D	D005, D006, D007, D008, D011	None	D007, D008, D009	D005, D006, D007, D008, D009, D011
HRS	High Resolution Spectroscopy	None	None	D008	D008
IB	Matrix Study Of Pyrochemical Salts	D005, D006, D007, D008, D011	None	D007, D008, D009	D005, D006, D007, D008, D009, D011

P/S Code	Description	Potential EPA Hazardous Waste Numbers (HWNs)			Applicable HWNs
		Due to Feed (from Table 1 and text)	Due to Chemical Use (from Table 4)	Due to Process*	
ICP	ICP–AES Analysis	None	None	D007, D008, D009	D007, D008, D009
IE	Isotope Enrichment	D005, D006, D007, D008, D011	None	D007, D008, D009	D005, D006, D007, D008, D009, D011
LI	XF6 Experimental Measurements	D005, D006, D007, D008, D011	None	D007, D008, D009	D005, D006, D007, D008, D009, D011
LIBS	Laser-Induced Breakdown Spectroscopy System	None	None	None	None
ME	Metallography	None	D040, F003	D007, D008	D007, D008, D040, F003
NCD	Nonconfirming Drums	None	None	None	None
RASS/ RSS	Raman Spectroscopy System	D004, D005, D006, D007, D008, D009, D010, D011, D019	None	D007, D008, D009	D004, D005, D006, D007, D008, D009, D010, D011, D019
RD	Repackaging into Retrievable Drums	None	None	D008	D008
SA	Super Acid RD&D	None	D018, D038, F002, F003, F005, U213	D007, D008, D009	D007, D008, D009, D018, D038, F002, F003, F005, ~~U213~~ (applicability of U213 to be determined)
SMP	SP Mounting Preparation	None	None	None	None
SO	Super Oxidizer, FOOF Program	D004, D005, D006, D007, D008, D009, D010, D011	None	D007, D008, D009	D004, D005, D006, D007, D008, D009, D010, D011
STF	Standard Fabrication	None	None	D007, D008	D007, D008
VS	Confirmation, Inspection & Sampling	None	None	D008	D008
WM	Waste Management	Must be determined on case-by-case basis			**D007, D008, D009, D022, D035, D040, F001, F002, F005
X0	Inactive or Unspecified P/S Material	Must be determined on case-by-case basis			**D007, D008, D009, D022, D035, D040, F001, F002, F005
XES	X-Ray Energy Spectroscopy	D004, D005, D006, D007, D008, D009, D010, D011	None	D007, D008, D009	D004, D005, D006, D007, D008, D009, D010, D011

No K or P listings apply to solid wastes generated from any of the miscellaneous operations because no K-listed or P-listed chemicals were present in the feed materials, chemicals, or equipment used in these processes.

4.2 Toxicity Listings

The list below is summarized from Table 5 and lists the EPA HWNs applicable to waste from processes described in this report. P/S codes marked with an asterisk (*) in the list do not contain RCRA-listed constituents in the feed material or in the chemicals used in the process, but have been assigned HWNs due to the potential for chromium (D007) to be leached from stainless steel equipment or items in the process, lead (D008) due to the use of leaded gloves in the process, and mercury (D009) if there is a potential for a glass mercury thermometer to have been used in the same glovebox. Prior to 1987, leaded gloves were not segregated from combustible debris. Between 1987 and May 1992, they were segregated and discarded in the metal debris waste stream. Since May 1992, they have been routinely segregated and assigned to a leaded-glove waste stream, still under the originating P/S code (TWCP-4166).

AC, AC2		D007, D008, D009, D011, D018, D022, D038, ~~U213~~ [applicability of U213
AC1		D007, D008, D009, D011, D018, D022, ~~D038, U213~~ to be determined]
ACL	*	D007, D008, D009
AD		D004, D005, D006, D007, D008, D009, D010, D011, D019, D039
APD		D007, D008, D009, D019, D021, D022, D039
AX	*	D007, D008, D009
CK		D005, D006, D007, D008, D009, D011
CV		D005, D006, D007, D008, D009, D011, D019
EDC	*	D007, D008
EOC	*	D007, D008, D009
EXT		D005, D006, D007, D008, D009, D011
FDL		D004, D005, D006, D007, D008, D009, D010, D011
FLU		D004, D005, D006, D007, D008, D009, D010, D011
HRS	*	D008
IB		D005, D006, D007, D008, D009, D011
ICP	*	D007, D008, D009
IE		D005, D006, D007, D008, D009, D011
LI		D005, D006, D007, D008, D009, D011
ME		D007, D008, D040
RASS/RSS		D004, D005, D006, D007, D008, D009, D010, D011, D019

RD	D008
SA	D007, D008, D009, D018, D038 [applicability of U213 to be determined]
SO	D004, D005, D006, D007, D008, D009, D010, D011
STF	D007, D008
WM	D007, D008, D009, D022, D035, D040 [D-listings are not applicable after 1993]
X0	D007, D008, D009, D022, D035, D040
XES	D004, D005, D006, D007, D008, D009, D010, D011
XO	D007, D008, D009, D022, D035, D040
XP	D004, D005, D006, D007, D008, D009, D010, D011

Activities under P/S codes LIBS, NCD, and SMP do not generate solid waste to which any HWN would be applicable.

~~4.3 Corrosivity, Reactivity, and Ignitability~~

Append to end of 4.2

No D001 (ignitable), D002 (corrosive), or D003 (reactive) listings apply to the solid wastes from miscellaneous operations because no ignitable chemicals were used in these processes and because the solid wastes do not contain any free liquids (see Section ~~6~~5.0). In addition, D001 does not apply due to flammable organic solvent use because solutions containing these solvents are sent to aqueous recovery.

For aqueous recovery, steps include dissolution of any solid Pu in 8–16 molar HNO_3 and purification by ion exchange. After recovery of Pu from ion exchange, the solutions are below the DL, which are then set to the evaporator for volume reduction. Evaporator bottoms are fixed in cement; therefore, ignitability is not a concern in these wastes.

~~5.0 DETERMINATION OF THE RADIOISOTOPIC COMPOSITION~~

~~See Section 3.5.2.~~

5 ~~6~~.0 VERIFICATION THAT IGNITABLE, REACTIVE, AND CORROSIVE WASTES WERE EXCLUDED

According to the WIPP WAP, "The prohibition of liquids and containerized gases prevents the shipment of corrosive, ignitable, or reactive wastes." Administrative controls on waste packaging were in place at various times to ensure the absence of such items from the waste stream.

- Liquids were prohibited from solid waste streams at TA-55 when the facility opened in January 1978. A waste management procedure written to cover operations at the new facility, *TA-55 Standard Operating Procedure (SOP) 406-GEN-R00*, stated that "Liquids are not permitted in any container of solid waste materials" (TWCP-3943).

- Chemical Waste Disposal Requests introduced in June 1980 included checkboxes which the waste generator was required to check if the waste contained corrosive acids or bases, or pyrophoric, flammable, corrosive, explosive, toxic, carcinogenic or highly reactive materials.

- The Certification Plan (TWCP-697) and related Generator Attachments (TWCP-701) were implemented in 1987. Waste generators were required to sign a statement on the WODF documenting that the waste contained "no free liquids, pyrophorics, explosives, compressed gases, powders or materials other than the indicated matrix." Checkboxes were also present for indicating the presence or absence of corrosive chemicals. Full implementation of this generator statement occurred in May 1987.

- Waste management inspectors perform visual examination of the waste prior to its initial packaging, thus allowing the inspectors to verify the generator's WODF statement (TWCP-701, Sections 3.8.5 to 3.8.6).

stet

- In addition to the above-mentioned prohibitions on explosives in wastes, explosives were prohibited from TA-55 until installation of the Impact Test Facility in the early 1990s. Explosives continue to be banned in the solid waste streams up to the present time. If a misfire should occur, the requirement is to destroy the unspent powder by burning (TWCP-4720).

no just add reference at end

- The Waste Profile Request Form (WPRF), which has been in use at LANL since 1991, includes a statement which must be authenticated by the waste generator, that the waste is not ignitable (flash point >200°F), reactive, or corrosive.

- The TA055 Generator Attachments to the Certification Plan were updated in 1995 (TWCP-700) but the prohibition on liquids in the waste, and the waste management inspection, remained in effect.

Hence, since the inception of operations at TA-55, corrosive and reactive wastes have been excluded from TA-55 solid wastes through the prohibition of liquids.

The absence of these prohibited items is verified through radiography of each waste container and visual examination of selected containers during TWCP characterization activities. These data will be used to assess the accuracy of AK information in accordance with *Reconciliation of Visual Examination and Radiography Information* (TWCP-QP-1.1-028). Any free liquids are remediated, or the container is tagged as non-compliant by filing a Prohibited Waste Report in accordance with *Nonconformance Reporting and Tracking* (TWCP-QP-1.1-007).

6 ~~7~~.0 VERIFICATION THAT INCOMPATIBLE CHEMICALS WERE PROHIBITED

Section 6.0 summarizes administrative controls in place at TA-55 that prohibit incompatible chemicals in the waste, and measures taken to verify their absence. In addition, all waste containers shipped from TA-55 to TA-54 for storage were evaluated

for potentially incompatible chemicals in accordance with 49 *Code of Federal Regulations* (CFR) Subpart C—Segregation and separation chart of hazardous materials; Section 177.848, Segregation of hazardous materials, and were determined to be in compliance with this requirement.

7 ~~8~~.0 VERIFICATION THAT THERE ARE NO COMPRESSED GASES, FREE LIQUIDS, NONRADIONUCLIDE PYROPHORICS, SEALED CONTAINERS GREATER THAN FOUR LITERS IN VOLUME, OR >1% RADIONUCLIDE PYROPHORICS

Most gases used at the TA-55 Plutonium Facility are stored outside the building and the gas is plumbed into the glovebox from outside the building (TWCP-4164). Occasionally, a lecture bottle may have been used for a process inside the building, but these bottles were kept outside of the glovebox with the gas plumbed into the glovebox. Consequently, compressed gas cylinders or containers are not expected to be in any of the TRU wastes generated by TA-55 operations.

Spray cans, especially WD-40, were in common use in TA-55 gloveboxes until May 1992 (TWCP-4166). These were routinely discarded as metal debris waste. From 1988 until May 1992, the protocol was to vent or puncture the spray cans inside the glovebox; venting was indicated by inserting a metal wire into the valve. After May 1992, spray cans were no longer used in gloveboxes.

For items of pyrochemical salt waste, the procedures of oxygen sparging and/or carbonate oxidation have been used since May 1987 to ensure that pyrophorics were oxidized. In addition, screening tests on similar pyrochemical salts and residues (which contain higher amounts of plutonium) at the Rocky Flats Environmental Technology Site (TWCP-2501) have shown (1) no autoignition, (2) no spontaneous combustion, and (3) no sparking. Experimental results on the reactivity of LANL Direct Oxide Reduction (DOR) salt with water and the reactivity in air of heated calcium metal nodules from DOR salts indicate the absence of "dangerous when wet materials" and pyrophoricity in these salts (TWCP-3730, TWCP-3731, TWCP-3732).

Verification that individual waste drums do not contain compressed gases, free liquids, or sealed containers greater than 4 L in volume is obtained from radiography of each waste containers and visual examination of selected containers during TWCP characterization activities. Any free liquids are remediated, and any sealed containers greater than 4 L in volume, or unpunctured or unvented gas containers, are removed; or else the waste container is tagged as non-compliant by filing a Prohibited Waste Report in accordance with *Nonconformance Reporting and Tracking* (TWCP-QP-1.1-007). For administrative controls on the prohibition of pyrophorics, see Sections ~~6~~.0 and ~~7~~.0.
5 6

8 ~~9~~.0 VERIFICATION THAT THERE ARE NO POLYCHLORINATED BIPHENYLS (PCBs) IN THE WASTE STREAM

No PCBs were introduced into the miscellaneous operations, based on documentation in TA-55 procedures reviewed during the AK investigation and summarized in the process inputs listed in Table 1, Table 4, and Attachment 4. Oils used in the reviewed processes include vacuum pump oils, and cutting fluids used for cooling purposes; none of these oils are known to contain PCBs. All transformers known to contain PCBs have been tracked from the time of startup of TA-55 in 1978. Whenever any transformer oil is drained, it is handled by a subcontractor who is wholly responsible for its disposal disposal (TWCP-AK-2.1-005,R.~~1~~ 2, Section ~~9~~ 8.0). This oil does not enter the LANL disposal operations.

9 ~~10~~.0 CITED PROCEDURES AND REQUIREMENTS DOCUMENTS

- 40 CFR Part 261, Subpart C—Characteristics of hazardous waste, Sections 261.21 (*Characteristic of ignitability*), 261.22 (*Characteristic of corrosivity*), 261.23 (*Characteristic of reactivity*), and 261.24 (*Toxicity characteristic*)
- 40 CFR Part 261, Subpart D—Lists of hazardous waste, Sections 261.31 *(Hazardous wastes from non-specific sources)*, 261.32 *(Hazardous wastes from specific sources)*, and 261.33 *(Discarded commercial chemical products, off-specification species, container residues, and spill residues thereof)*
- 49 CFR Subpart C—Segregation and separation chart of hazardous materials. Section 177.848, *Segregation of hazardous materials*
- *Acceptable Knowledge Documentation* (TWCP-QP-1.1-021,R.~~5~~ 7)
- *Nonconformance Reporting and Tracking* (TWCP-QP-1.1-007)
- *Reconciliation of Visual Examination and Radiography Information* (TWCP-QP-1.1-028)
- *Waste Acceptance Criteria for the Waste Isolation Pilot Plant* (DOE/WIPP-069)
- *Waste Analysis at Facilities that Generate, Treat, Store and Dispose of Hazardous Waste* (EPA/OSWER 9938.4-03)
- Waste Analysis Plan, Attachment B to the *Hazardous Waste Facility Permit Issued to the Waste Isolation Pilot Plant* (EPA No. NM4890139088)
- *Waste Characterization Data Reconciliation with Acceptable Knowledge* (TWCP-DTP-1.2-064)

PROCESS INPUTS AND OUTPUTS

P/S Code	P/S Title	Process Inputs		Process Outputs		EPA Codes[2]	References[3]
		Feed Stream(s)	Chemicals/Reagents	Product	Waste Stream[1]		
AC AC2	Actinide Chemistry R&D	Actinide metals Pyridine	Acetonitrile Actinide (Th-Am) metals Alcohols (unspecified) Alkali metals Alkaline earth metals Alkylating agents (unspecified) Benzene Chloroform Cryogens Dichloromethane Hexane Hydrochloric acid Inorganic reagents/complexes (unspecified) Inorganic salts (unspecified) Lanthanide metals Nitric acid Perchloric acid Phosphates Phosphines Potassium hydroxide Potassium salts Silver salts Sodium hydroxide Sodium salts Tetrahydrofuran Toluene Transition metals Transition-lanthanide-, actinide- metal complexes	Solvated halide complexes yielding homoleptic alkyl complexes; and unspecified	Reaction byproducts, residues, precipitated salts, spent solvents, spent acids, filtration media, debris	D007, D008, D009, D011, D018, D022, D038, F002, F005, U213	M-025 M-038

P/S Code	P/S Title	Process Inputs		Process Outputs		EPA Codes[2]	References[3]
		Feed Stream(s)	Chemicals/Reagents	Product	Waste Stream[1]		
AC1	Actinide Chemistry R&D	Actinide metals	Acetonitrile Actinide (Th-Am) metals Alcohols (unspecified) Alkali metals Alkaline earth metals Alkylating agents (unspecified) Benzene Chloroform Cryogens Dichloromethane Hexane Hydrochloric acid Inorganic reagents/complexes (unspecified) Inorganic salts (unspecified) Lanthanide metals Nitric acid Perchloric acid Phosphates Phosphines Potassium hydroxide Potassium salts Silver salts Sodium hydroxide Sodium salts ~~Tetrahydrofuran~~ Toluene Transition metals Transition-lanthanide-, actinide- metal complexes	Solvated halide complexes yielding homoleptic alkyl complexes; and unspecified	Reaction byproducts, residues, precipitated salts, spent solvents, spent acids, filtration media, debris	D007, D008, D009, D011, D018, D022, ~~D038,~~ F002, F005, ~~U213~~	M-025 M-038
AC3	Actinide Chemistry	NA	NA	NA	NA	NA	NA
ACL	Analytical Chemistry Lab	Plutonium and americium solutions	Nitric acid	None	Unused liquid samples, chromatography residues	D007, D008, D009	M-042

5/12/01

TA-55 PLUTONIUM FACILITY
ACCEPTABLE KNOWLEDGE REPORT

REPORT TITLE: Process Acceptable Knowledge Summary Report for Miscellaneous Operations at TA-55

REPORT NUMBER: TWCP-AK-2.1-004,R.2 (LA-UR-01-)

WASTE GENERATED FROM PROCESS/STATUS CODES: AC, AC1, AC2, AC3, ACL, AD, APD, AX, CK, CV, EDC, EOC, EXT, FDL, FLU, HRS, IB, ICP, IE, LI, LIBS, ME, NCD, RASS/RSS, RD, SA, SMP, SO, STF, VS, WM, X0, XES, XO, XP

EFFECTIVE DATE: _____

NEXT REVIEW DATE: _____

DOCUMENT PREPARER:

_____ _____
NAME DATE

APPROVALS:

_____ _____
INDEPENDENT TECHNICAL REVIEWER/EDITOR DATE

_____ _____
SITE PROJECT MANAGER DATE

_____ _____
WASTE CERTIFICATION OFFICIAL DATE

_____ _____
SITE PROJECT QA OFFICER DATE

_____ _____
FACILITY REPRESENTATIVE DATE

© 2000, 2001 University of California

ACRONYMS

AK	acceptable knowledge
CMPO	octylphenyldiisobutylcarbamoylmethylphosphine oxide
D	EPA hazardous waste number prefix for wastes with hazardous characteristics, defined in 40 CFR Subpart C, Sections 261.21 to 261.24
DBBP	dibutyl butylphosphonate
DHDCMP	dihexyl N,N-diethylcarbamoylmethyl phosphonate
DL	discard limit
DOE	U.S. Department of Energy
DWLS	Discardable Waste Log Sheet
EPA	U.S. Environmental Protection Agency
F	EPA hazardous waste number prefix for hazardous wastes from non-specific sources, defined in 40 CFR Subpart D, Section 261.31
FOOF	dioxygen difluoride
GB	glovebox
HEPA	high-efficiency particulate air
HWN	[EPA] hazardous waste number
K	EPA hazardous waste number prefix for hazardous wastes from specific sources, defined in 40 CFR Subpart D, Section 261.32
LANL	Los Alamos National Laboratory
MEGAS	Multiple Energy Gamma Assay System
MSE	molten salt extract
MT	material type
NDA	non-destructive assay
P	EPA hazardous waste number prefix for acute hazardous waste defined in 40 CFR Subpart D, Section 261.33(e)
PF-4	Plutonium Facility, Building 4
P/S [code]	process/status [code]
QA	quality assurance
R&D	research and development
RCRA	Resource Conservation and Recovery Act
RD&D	research, development, and demonstration
RFETS	Rocky Flats Environmental Technology Site
RLWTF	Radioactive Liquid Waste Treatment Facility
RMDC	Records Management/Document Control
Sampling Plan	*Los Alamos National Laboratory Transuranic Waste Characterization Sampling Plan* (TWCP-PLAN-0.2.7-001,R.3)
SME	subject matter expert
TA	technical area
TBP	tributyl phosphate
TCLP	Toxicity Characteristic Leaching Procedure
TRU	transuranic
TWCP	Transuranic Waste Characterization Program
U	RCRA hazardous waste number prefix for toxic waste defined in 40 CFR Subpart D, Section 261.33(f)
UCNI	Unclassified Controlled Nuclear Information

present in the process wastes, based on subject matter expert (SME) interviews and any ~~available data~~ relevant record

The TWCP Records Management/Document Control (RMDC) Center contains copies of the documents referenced in this report. Any Unclassified Controlled Nuclear Information (UCNI) will be contained in these records, and will not be included in this report. Such records are identified as UCNI in the Acceptable Knowledge Roadmap (Attachment 1).

This process AK summary report is part of a set of closely related reports about TRU-waste generating activities at TA-55. For convenience in organizing AK for plutonium processing at this facility, the processes were categorized into six arbitrary operational areas. The multiple processes in each area are then described in detail in the following six process AK reports for plutonium:

- *Process Acceptable Knowledge Summary Report for Chloride Operations at TA-55* (TWCP-AK-2.1-002)
- *Process Acceptable Knowledge Summary Report for Metal Operation Processes at TA-55* (TWCP-AK-2.1-003)
- *Process Acceptable Knowledge Summary Report for Miscellaneous Operations at TA-55* (TWCP-AK-2.1-004) (this report)
- *Process Acceptable Knowledge Summary Report for Nitrate Operations at TA-55* (TWCP-AK-2.1-005)
- *Process Acceptable Knowledge Summary Report for Pyrochemical Processes at TA-55* (TWCP-AK-2.1-006)
- *Process Acceptable Knowledge Summary Report for Special Processing at TA-55* (TWCP-AK-2.1-007)

Each process AK report contains information on multiple individual processes that are assigned unique identifiers called process/status (P/S) codes. For example, miscellaneous processes include 36 individual processes that are each assigned a P/S code, as listed on the cover page of this report. The search and compilation of AK information was based on P/S code because that is the most detailed level of process information generally recorded in waste generation records. The process AK reports frequently cross-reference one another because P/S codes in one operational area often provide the material feed for P/S codes in another area. An index of P/S codes cited in this process AK report follows the list of acronyms; this index lists process descriptions and the primary process AK report in which that P/S code is discussed.

present in each drum, in order to evaluate the most appropriate waste summary group, waste matrix code, and potential for the presence of hazardous constituents. In the Sampling Plan, TA-55 wastes have been assigned to waste streams based on the waste segregation schemes used by TA-55:

- ~~First by~~ radioisotope content (Pu-238 or Pu-239 material type)
- ~~Then by~~ material matrix (combustible, noncombustible, metal, glass, etc. waste types)
- ~~Then by~~ hazardous waste status (mixed, non-mixed, or special case waste streams)

3.3 Waste Physical Form and Content Description

Wastes generated during miscellaneous operations include primarily debris wastes and wastes entered into the cement fixation process or sent to the Radioactive Liquid Waste Treatment Facility (RLWTF) at TA-50. General debris waste categories from miscellaneous operations include

- Cellulose-based waste (for example, paper, cloth)
- Plastic-based waste (for example, gloves, tape, labware)
- Rubber
- Metal debris (for example, wire, hose clamps, tools, labware)
- Glass debris

These debris waste items are contaminated with small amounts of radioactive and chemical substances. In addition to these general debris categories, miscellaneous processes also generated waste consisting of organometallic and inorganic solids of various compositions, sand and slag, ash, and crucibles.

3.4 Waste Volume and Time Period of Waste Generation

This report covers waste streams generated from 1979, when miscellaneous processes first began at TA-55, to the present. Process wastes from miscellaneous operations have different associated EPA hazardous waste numbers (HWNs) depending on the time period during which they were generated. The P/S codes, their time period of generation, and corresponding HWNs are shown graphically in Attachment 3, Time Lines. These timelines are based on a review of procedures that guided the experimental and demonstration studies and miscellaneous research and development (R&D) operations at TA-55 and information from SMEs familiar with the operations. Many of the operations were short duration and/or changed frequently. Initiation or continuation of a process was surmised based on the date of approval for a given procedure. In some cases, a series of procedures or related documents for one process could be located to establish the timeline. In many other cases, discontinuities between procedure titles and numbers made it difficult to determine how long the process may have continued before it was modified or ended. For purposes of this report, the time period for

Purification process development investigations occurred in Room 208, GB 230, 238, and 274 from May 1988 through September 1994. Processes carried out were of a non-routine developmental nature involving research, process development, small scale "trouble-shooting," and occasionally preparation of various isotopes and isotopic mixtures of plutonium, uranium, americium, and neptunium (M-006/TWCP-3546). Frequently used chemicals included concentrated and dilute acids and bases, analytical standards, and reducing and oxidizing agents. Tetrachloroethylene and diisopropyl benzene are listed as solvent diluents, and methanol and ethanol are listed as "infrequently used chemicals." Waste streams containing or contaminated with tetrachloroethylene would result in the assignment of the F002 hazardous waste code for spent halogenated solvents. Carbon tetrachloride is indicated as being used as a solvent diluent from July 1991 to March 1992. Because carbon tetrachloride was not used as a degreaser, the F001 hazardous waste code for carbon tetrachloride does not apply; however, the D code for carbon tetrachloride (D019) would be applied unless analytical data indicate that the concentration of the D-listed hazardous constituent does not exceed the applicable regulatory threshold limit. The procedure did not clarify how methanol was used in the process; however, an SME (M-034/TWCP-3546) familiar with the process stated that methanol and ethanol slushes were used in cooling baths outside the glovebox. Methanol used outside the glovebox would not become part of the TRU waste stream and the hazardous waste code would not apply. However, methanol and/or ethanol may also have been used for cleaning inside the glovebox (M-034/TWCP-3546).

→ F003 (F003)

Wastes that may be generated under P/S code AD include typical laboratory debris such as labware (e.g., glass, plastic, rubber, or metal materials and supplies), rags from general cleanup, spent solutions, and typical glovebox operations waste, including drybox gloves, windows, gaskets, and high-efficiency particulate air (HEPA) filters. Other wastes include the strip solutions and raffinate, spent organics, and unused hydroxide cake samples. The procedure indicates strip solutions and spent organics were stored but does not address ultimate disposal of these spent solutions. The process accountability flow diagram for P/S code AD indicates outputs from this operation may be sent to the vault, returned to the originating P/S code, or directed to aqueous recovery or cement fixation based on the discard limit (DL). Materials may also be sent for chemical analysis or transferred to P/S code APD for further experimental development. Assuming that evaporator hydroxide cakes comprised the primary feed material for this code, the hazardous constituents associated with the feedstock material may be concentrated in the actinide-containing matrices and solutions that are discarded as waste. Based on information presented in TWCP-AK-2.1-002,R.1 (chloride operations) and TWCP-AK-2.1-005,R.1 (nitrate operations),

P/S code LI was a fairly pure operation in Rooms 105, 106, and 113 that converted small quantities of PuO_2 to PuF_6 (M-035/TWCP-3546). The converted material was given to whomever needed it for further R&D. The timeline is likely similar to that for P/S code IE. No RCRA constituents of concern were involved in the operation.

Separation operations involving experimental chlorination processes similar to the previously described fluorination procedures were initiated in Room 106, GB-165, in March 1991 under P/S code CV (M-026/ TWCP-3546). A gas loop was used to flow carbon tetrachloride and perchlorocarbons (M-035/TWCP-3546) through a gas-solid reactor to chlorinate plutonium oxides to form recoverable plutonium compounds. Once produced, the plutonium compounds and/or plutonium-bearing matrices were subjected to further treatment to achieve complete plutonium recovery. Process chemicals included dilute acids and bases and chlorinated hydrocarbons. Carbon tetrachloride and tetrachloroethylene were used in the cold traps, which were of the standard TA-55 configuration located outside the glovebox (M-035/ TWCP-3546); therefore, the coolant chemicals would not have been part of the TRU waste stream. Process outputs from this operation may have been sent to the vault via the countroom, returned to the originating P/S code, or transferred to aqueous recovery or cement fixation (based on the discard limit). Sub-accountable samples may have been sent to chemical analysis.

(compounds)

Plutonium chlorination operations were used to recover or purify plutonium compounds and/or plutonium-bearing matrices in Room 208, GB-223, beginning in October 1992. During November 1994 the operation shifted to Room 106, GB-160 (M-027/TWCP-3546). The P/S code for this operation is identified as CV. This operation involves the use of various reagents, which are passed through a gas-solid reaction loop to produce recoverable plutonium compounds. Chemical reagents include dilute acids and bases, carbon tetrachloride, reducing agents, and ammonium chloride. In addition to the standard debris waste, process waste included trace carbon tetrachloride from reagent bottles. Carbon tetrachloride was used as a chlorinating compound in the reaction loop and would have been completely reacted in the chlorination process (M-035/TWCP-3546). Because carbon tetrachloride was not used as a solvent or degreaser, the F-listing for carbon tetrachloride is not applicable. Process outputs from this operation may have been sent to the vault via the countroom, returned to the originating P/S code, or transferred to aqueous recovery or cement fixation (based on the DL). Sub-accountable samples may have been sent to chemical analysis.

A small-scale research operation involving gas-solid and solid-solid fluorination and chlorination chemistry began in March 1992 in

P/S code EXT was a small basic research operation that began in March 1992 in Room 106, GB-180. This research effort explored aqueous extraction of plutonium from various waste streams, particularly used pyrochemical salts (M-013/TWCP-3546), using acids and bases. The procedure does not indicate the use of any RCRA-listed chemicals. Wastes from this operation would include rags and paper products from general clean-up; labware that may include glass, plastic, or metal; heating mantles, and spent pyrochemical salts. The process accountability flow diagram and procedures for this process do not identify the P/S codes that fed this operation. Spent pyrochemical salts contain barium (D005), cadmium (D006), chromium (D007), lead (D008), and silver (D011) at concentrations that depend upon the process that generated the salt. Concentrations of RCRA heavy metals are below regulatory limits for pyrochemical salts from direct oxide reduction (P/S code OR) (TWCP-2540), but concentrations are not known for pyrochemical salts from salt stripping (P/S code SS) or special processes (P/S code PX). Residues from the solution extraction process were sent to the vault via the countroom, returned to the originating P/S code, or transferred to chloride (P/S code CX) or nitrate (P/S code CF) operations. The D-listed constituents would carry through to subsequent treatment processes. Solutions were transferred to chloride (P/S code CX) or nitrate (P/S code CF) operations, or were disposed to the acid waste line if the solutions met the waste acceptance criteria for the RLWTF at TA-50.

3.5.7 Hydrothermal Processing (P/S Code APD)

P/S code APD was a hydrothermal processing procedure initiated in March 1996 in Room 208, GB-230 (M-001/TWCP-3546). The operation involves the reaction of aqueous/organic mixtures, pure organic liquids, or contaminated combustible solids (e.g., ion exchange resins, plastic filters, and cellulose rags) under supercritical conditions (i.e., high temperature and pressure). Feed streams include, but are not limited to, analytical laboratory solutions that may contain ~~carbon tetrachloride,~~ tributyl phosphate, and organic solvents ~~(unspecified in the procedure),~~ as well as lead and mercury (Cl-25/TWCP-3547). Process effluents are gases, liquids and salts. Organic components are oxidized to carbon dioxide. Nitrate contaminants are converted to nitrogen gas and some nitrous oxide. Components ~~such as~~ chlorine, sulfur, and phosphorus are oxidized and converted to acids or salts. Gases are liberated; solids and liquids are collected for recovery or disposal.

The types of chemical wastes generated by hydrothermal processing experiments are predominantly effluents and rags. Hazardous organic constituents, including carbon tetrachloride, are probably destroyed by the hydrothermal process (M-034/TWCP-3546); therefore, organic

Table 4. Chemical Inputs to Processes Described in This Report

Chemical input	P/S Codes in which RCRA-Listed Chemicals Are Used	Comments on Applicability of EPA HWN
Gases and Cryogens		
Carbon dioxide (gas) Fluorine (gas) Halogen fluorides Krypton fluoride Methane (gas) Nitrogen dioxide (gas) Nitrogen, liquid		D001 and D002 do not apply to these gases because there are no free liquids in this waste. Also the gas cylinders are outside the building, and the gases are plumbed into the glovebox.
Acids		
Hydrochloric acid Hydrofluoric acid Nitric acid Oxalic acid Perchloric acid Sulfuric acid Superacids (e.g., HSO_3F)	 AD SA	D002 does not apply to the solid debris waste because there are no free liquids in this waste. D001 (oxidizer) does not apply to the use of nitric or perchloric acid or to the superacids for the same reason.
Bases		
Calcium hydroxide Potassium hydroxide Sodium hydroxide		D002 does not apply to the solid debris waste because there are no free liquids in this waste.
Inorganic Chemicals		
Aluminum bifluoride Aluminum chloride Aluminum fluoride Aluminum nitrate Aluminum oxide Ammonium chloride Antimony pentafluoride Bromine FOOF Hydrogen peroxide Hydroxylamine hydrochloride Hydroxylamine nitrate Iodine Iron oxide Lead and lead hydroxide, oxide, or nitrate Magnesium oxide Na, K, Li, Mg, Ca, Fe, nitrates, chlorides, carbonates, bicarbonates, oxalate, nitrites Phosphates Potassium choride Potassium dichromate	 AD, APD AD	 D008 D007

CONTENTS

Section **Page**

ACRONYMS iv

TA-55 PROCESS/STATUS (P/S) CODE INDEX vi

PROCESS ACCEPTABLE KNOWLEDGE SUMMARY viii

1.0 INTRODUCTION 1

2.0 METHODOLOGY USED TO SEARCH FOR AK RECORDS 1

3.0 DESCRIPTION OF THE PROCESS WASTE 3
- 3.1 Facility and Mission 3
- 3.2 Basis, Rationale, and Assumptions Used to Delineate the Waste Streams 3
- 3.3 Waste Physical Form and Content Description 4
- 3.4 Waste Volume and Time Period of Waste Generation 4
- 3.5 Waste Generation Processes 5
- 3.6 Material Inputs to the Waste Generation Process 23

4.0 ASSIGNMENT OF EPA HAZARDOUS WASTE NUMBERS 30
- 4.1 F, K, and P Listings 33
- 4.2 Toxicity Listings 34

5.0 VERIFICATION THAT IGNITABLE, REACTIVE, AND CORROSIVE WASTES WERE EXCLUDED 35

6.0 VERIFICATION THAT INCOMPATIBLE CHEMICALS WERE PROHIBITED 36

7.0 VERIFICATION THAT THERE ARE NO COMPRESSED GASES, FREE LIQUIDS, NONRADIONUCLIDE PYROPHORICS, SEALED CONTAINERS GREATER THAN FOUR LITERS IN VOLUME, OR >1% RADIONUCLIDE PYROPHORICS 37

8.0 VERIFICATION THAT THERE ARE NO POLYCHLORINATED BIPHENYLS (PCBs) IN THE WASTE STREAM 38

9.0 CITED PROCEDURES AND REQUIREMENTS DOCUMENTS 36

Tables
- 1 Process Feed Materials for Miscellaneous Operations 24
- 2 Average Isotopic Content of Plutonium Material Types and Enrichments 26
- 3 Average Isotopic Content of Uranium Material Types and Enrichments 26
- 4 Chemical Inputs to Processes Described in This Report 28
- 5 Evaluation of the Applicability of EPA Hazardous Waste Numbers to Processes Discussed in This Report 31

Attachments
- 1 Acceptable Knowledge Roadmap (16 pages) insert space
- 2 LANL and TA-55 Site Maps (2 pages)
- 3 Timeline for TA-55 Miscellaneous Processes (6 pages)
- 4 Process Inputs and Outputs (11 pages)
- 5 Simplified Process Flow Diagram (1 page)

The procedure describes operations that comprise a broad range of laboratory activities in support of fundamental and applied actinide chemistry research (M-025/TWCP-3546). These activities include, but are not limited to, preparation of solvents and reagents, synthesis of new chemical compounds, and characterization and analysis of new chemical compounds using wet chemistry methods and analytical instrumentation. The chemical list indicates the use of a variety of materials, including organic solvents (e.g., pyridine, toluene and benzene), alkaline earth metals, and transition metals. The SMEs (M-038/TWCP-3546) familiar with these activities indicated that a "variety of aromatic, alkaline, and chlorinated solvents" (e.g., tetrahydrofuran, toluene, benzene, methylene chloride, and chloroform) were used in these activities. Hexane and acetonitrile began to be used in P/S code AC2 recently. Acetonitrile ~~is an~~ Appendix VIII VOCs but ~~its~~ their EPA HWNs (U003 and U213) ~~does~~ do not apply in this case. ~~These~~ organic chemicals ~~have the following~~ are EPA HWNs: benzene (D018, F005), chloroform (D022), methylene chloride (F002), ~~tetrahydrofuran~~, and toluene (F005). The SME stated that waste byproducts from the operations that contain these constituents were not discarded but were held in the glovebox for reprocessing or recovery. Because the SME was not involved with these activities after 1994, he was unable to definitively state how the waste materials were ultimately dispositioned. In a later discussion, other SMEs (M-038/TWCP-3546) indicated that use of the chlorinated solvents associated with P/S code AC1 was discontinued in 1994 and that items contaminated with these constituents mentioned are still in the glovebox and have yet to be discarded as of the date of this report. Transition metals used as reagents in the synthesis of new materials in this process included sodium salts, potassium salts, and silver salts. The precipitated salt byproducts also were not discarded but were held in the glovebox for reprocessing and recovery. In a later discussion, other SMEs confirmed that silver salts associated with P/S code AC1 are still in the glovebox awaiting determination for a path forward for disposition. Other than silver (D011), no RCRA metals were used in the processes (M-038/TWCP-3546). In addition to the standard debris wastes, process wastes may have included reaction by-products and residues, heating mantles, vacuum pump apparatus, various pieces of laboratory equipment, spent organic solvents, and filtration media. Process outputs for both P/S codes may be sent to the vault, returned to the originating P/S code, or transferred to aqueous recovery or cement fixation (based on the discard limit).

tetrahydrofuran are

with applicable

P/S code AX was related to the dissolution of actinide compounds in superacid media but involved the assay of plutonium in nitric or hydrochloric acid solutions. This operation occurred in Rooms 401, 409, and 420. The procedure was initiated in 1988 and revised in 1989 (M-005/TWCP-3546). Assay solutions were accumulated for transfer to

Table 5. Evaluation of the Applicability of EPA Hazardous Waste Numbers to Processes Discussed in This Report

P/S Code	Description	Potential EPA Hazardous Waste Numbers (HWNs)			Applicable HWNs
		Due to Feed (from Table 1 and text)	Due to Chemical Use (from Table 4)	Due to Process*	
AC	Actinide Chemistry, R&D	None	D011, D018, D022, F002, F005 ~~U213~~	D007, D008, D009	D007, D008, D009, D011, D018, D022, F002, F005
AC1	Actinide Chemistry, R&D	None	D011, D018, D022, F002, F005	D007, D008, D009	D007, D008, D009, D011, D018, D022, F002, F005
AC2	Actinide Chemistry, R&D	None	D011, D018, D022, F002, F005 ~~U213~~	D007, D008, D009	D007, D008, D009, D011, D018, D022, F002, F005
AC3	Actinide Chemistry, R&D	None	None	None	None
ACL	Analytical Chemistry Laboratory	None	None	D007, D008, D009	D007, D008, D009
AD	Actinide Processing Demonstration	D004, D005, D006, D007, D008, D009, D010, D011, D019	D008, D019, D039, F002, F003	D007, D008, D009	D004, D005, D006, D007, D008, D009, D010, D011, D019, D039, F002, F003
APD	Actinide Processing Demonstration	D008, D009, D019, D021, D022, D039, F002, F003	None	D007, D008, D009	D007, D008, D009, D019, D021, D022, D039, F002, F003
AX	Solution Assay	None	None	D007, D008, D009	D007, D008, D009
CK	RD&D Volatile Fluoride Pu Recovery	D005, D006, D007, D008, D011	None	D007, D008, D009	D005, D006, D007, D008, D009, D011
CV	R&D Experimental Chlorination Processes	D005, D006, D007, D008, D011	D019, D039	D007, D008, D009	D005, D006, D007, D008, D009, D011, D019, D039
EDC	Electrolytic Decontamination	D007	None	D007, D008	D007, D008
EOC	Experimental Oxide Characterization	None	None	D007, D008, D009	D007, D008, D009
EXT	Extraction RD&D	D005, D006, D007, D008, D011	None	D007, D008, D009	D005, D006, D007, D008, D009, D011
FDL	FOOF Demonstration Loop	D005, D006, D007, D008, D011	None	D007, D008, D009	D005, D006, D007, D008, D009, D011
FLU	Fluorination RD&D	D005, D006, D007, D008, D011	None	D007, D008, D009	D005, D006, D007, D008, D009, D011
HRS	High Resolution Spectroscopy	None	None	D008	D008
IB	Matrix Study Of Pyrochemical Salts	D005, D006, D007, D008, D011	None	D007, D008, D009	D005, D006, D007, D008, D009, D011
ICP	ICP–AES Analysis	None	None	D007, D008, D009	D007, D008, D009

P/S Code	Description	Potential EPA Hazardous Waste Numbers (HWNs)			Applicable HWNs
		Due to Feed (from Table 1 and text)	Due to Chemical Use (from Table 4)	Due to Process*	
IE	Isotope Enrichment	D005, D006, D007, D008, D011	None	D007, D008, D009	D005, D006, D007, D008, D009, D011
LI	XF6 Experimental Measurements	D005, D006, D007, D008, D011	None	D007, D008, D009	D005, D006, D007, D008, D009, D011
LIBS	Laser-Induced Breakdown Spectroscopy System	None	None	None	None
ME	Metallography	None	D040, F003	D007, D008	D007, D008, D040, F003
NCD	Nonconfirming Drums	None	None	None	None
RASS/ RSS	Raman Spectroscopy System	D004, D005, D006, D007, D008, D009, D010, D011, D019	None	D007, D008, D009	D004, D005, D006, D007, D008, D009, D010, D011, D019
RD	Repackaging into Retrievable Drums	None	None	D008	D008
SA	Super Acid RD&D	None	D018, D038, F002, F003, F005 ~~U213~~	D007, D008, D009	D007, D008, D009, D018, D038, F002, F003, F005
SMP	SP Mounting Preparation	None	None	None	None
SO	Super Oxidizer, FOOF Program	D004, D005, D006, D007, D008, D009, D010, D011	None	D007, D008, D009	D004, D005, D006, D007, D008, D009, D010, D011
STF	Standard Fabrication	None	None	D007, D008	D007, D008
VS	Confirmation, Inspection & Sampling	None	None	D008	D008
WM	Waste Management	Must be determined on case-by-case basis			**D007, D008, D009, D022, D035, D040, F001, F002, F005
X0	Inactive or Unspecified P/S Material	Must be determined on case-by-case basis			**D007, D008, D009, D022, D035, D040, F001, F002, F005
XES	X-Ray Energy Spectroscopy	D004, D005, D006, D007, D008, D009, D010, D011	None	D007, D008, D009	D004, D005, D006, D007, D008, D009, D010, D011
XO	Inactive or Unspecified P/S Material	Must be determined on case-by-case basis. However, HWNs known to be applicable include those for chloroform (D022), trichloroethylene (D040, F001, F002), 1,1,2-trichloro-1,2,2-trifluorethane (F001, F002), methylene chloride (F002, use ended after 1999), and methyl ethyl ketone (D035, F005) because cleaning rags may be contaminated with these RCRA chemicals; also D007, D008, D009			**D007, D008, D009, D022, D035, D040, F001, F002, F005

- D018 (benzene): P/S codes AC, AC1, AC2, SA
- D019 (carbon tetrachloride): P/S codes AD, APD, CV, RASS/RSS
- D021 (chlorobenzene): P/S code APD
- D022 (chloroform): P/S codes AC, AC1, AC2, APD, WM, X0, XO
- D035 (methyl ethyl ketone): P/S codes WM, X0, XO
- D038 (pyridine): P/S code AC, AC1, AC2, SA
- D039 (tetrachloroethylene): P/S codes AD, APD, CV
- D040 (trichloroethylene): P/S codes ME, WM, X0, XO
- ~~Applicability of U213~~ (tetrahydrofuran) is still to be determined: P/S codes ~~AC, AC2, SA~~ Delete
- No HWN: P/S codes LIBS, NCD, SMP

Process waste volume (if known):

Waste volumes for each P/S code have not been tracked. Instead, waste items are segregated into similar material types and packaged in waste containers. Waste containers are segregated into waste streams in the Sampling Plan, and waste stream volumes are reported in that document.

Years of generation for the process waste: 1979–present

materials used in the process may include "hydrocarbon, ethereal, and aromatic solvents, organic reagents, and inorganic salts." The procedure was revised in 1991, at which time the operation was conducted in Room 105 (GB-166 and -177) and Room 208 (GB-230 and -240). The process consisted of a variety of small-scale organoactinide operations involving fundamental research of the synthesis in non-aqueous media of new actinide compounds, their characterization and reaction chemistry, and application to existing actinide processing technology. Due to the range of experimental studies conducted under this P/S code, a definitive list of chemical reagents does not exist; however, previous studies involved the use of a wide range of hydrocarbon solvents, including the D-listed and F-listed constituents: methylene chloride (F002), diethyl ether (F003), benzene (D018, F005), toluene (F005), and pyridine (D038, F005). Tetrahydrofuran ~~(U213)~~ and toluene were also used in the organometallic process. Neptunium and plutonium metal were put into tetrahydrofuran and dried. Bromine and/or iodine were added to create plutonium iodide, the starting material for other studies. In addition to standard debris wastes, process wastes may have included reaction by-products and residues, various pieces of laboratory equipment, spent organic solvents, and filtration media. Process outputs from this operation may be sent to the vault, returned to the originating P/S code, or transferred to aqueous recovery or cement fixation (based on the discard limit).

The procedure associated with the previous operation was revised once again in March 1994. The P/S codes for these operations are indicated as AC, AC1, AC2 and AC3. SMEs (M-038/TWCP-3546) familiar with these activities indicated that the process began as P/S code AC in February 1989 and transformed to P/S code AC2 in February 1994. P/S codes AC2 probably ran concurrently with AC1. This revised procedure indicates that operations occurred in the same rooms and gloveboxes identified in the previous revision. The distinguishing features between AC1 and AC2 were that AC1 was an analytical process using aqueous compounds, predominantly dilute nitric, hydrochloric, and perchloric acid solutions. These acidic solutions would have been neutralized and precipitated to recover the plutonium. Solutions were sent to cementation. The solids were rinsed from rags with water before the rags were discarded. Any perchloric salts would be in the neutralized acidic solutions or in the rinse solutions, which were both sent to cementation. P/S code AC2 involved synthesis of (air-sensitive) new compounds in an inert glovebox. This was a non-aqueous process. P/S code AC3 is not related to P/S codes AC1 or AC2, but is predominantly a metal operation (M-038/TWCP-3545). This code had not yet become active by the time this report was prepared, and no other information was available for it.

The procedure describes operations that comprise a broad range of laboratory activities in support of fundamental and applied actinide chemistry research (M-025/TWCP-3546). These activities include, but are not limited to, preparation of solvents and reagents, synthesis of new chemical compounds, and characterization and analysis of new chemical compounds using wet chemistry methods and analytical instrumentation. The chemical list indicates the use of a variety of materials, including organic solvents (e.g., pyridine, toluene and benzene), alkaline earth metals, and transition metals. The SMEs (M-038/TWCP-3546) familiar with these activities indicated that a "variety of aromatic, alkaline, and chlorinated solvents" (e.g., tetrahydrofuran, toluene, benzene, methylene chloride, and chloroform) were used in these activities. Hexane and acetonitrile began to be used in P/S code AC2 recently. Acetonitrile is an Appendix VIII VOC, but its EPA HWN (U003) does not apply in this case. These organic chemicals have the following EPA HWNs: benzene (D018, F005), chloroform (D022), methylene chloride (F002), tetrahydrofuran (~~U213~~), and toluene (F005). The SME stated that waste byproducts from the operations that contain these constituents were not discarded but were held in the glovebox for reprocessing or recovery. Because the SME was not involved with these activities after 1994, he was unable to definitively state how the waste materials were ultimately dispositioned. In a later discussion, other SMEs (M-038/TWCP-3546) indicated that use of the chlorinated solvents associated with P/S code AC1 was discontinued in 1994 and that items contaminated with these constituents mentioned are still in the glovebox and have yet to be discarded as of the date of this report. Transition metals used as reagents in the synthesis of new materials in this process included sodium salts, potassium salts, and silver salts. The precipitated salt byproducts also were not discarded but were held in the glovebox for reprocessing and recovery. In a later discussion, other SMEs confirmed that silver salts associated with P/S code AC1 are still in the glovebox awaiting determination for a path forward for disposition. Other than silver (D011), no RCRA metals were used in the processes (M-038/TWCP-3546). In addition to the standard debris wastes, process wastes may have included reaction by-products and residues, heating mantles, vacuum pump apparatus, various pieces of laboratory equipment, spent organic solvents, and filtration media. Process outputs for both P/S codes may be sent to the vault, returned to the originating P/S code, or transferred to aqueous recovery or cement fixation (based on the discard limit).

P/S code AX was related to the dissolution of actinide compounds in superacid media but involved the assay of plutonium in nitric or hydrochloric acid solutions. This operation occurred in Rooms 401, 409, and 420. The procedure was initiated in 1988 and revised in 1989 (M-005/TWCP-3546). Assay solutions were accumulated for transfer to

Chemical input	P/S Codes in which RCRA-Listed Chemicals Are Used	Comments on Applicability of EPA HWN
Methanol	AD, SO	F003 applies to AD because methanol may have been used for cleaning inside the glovebox. F003 does not apply to SO because methanol was used in a cold trap outside the glovebox.
Methylene chloride (also called dichloromethane)	AC1, SA	F002 applies to P/S codes AC1 and SA because methylene chloride was used for solvent properties.
n-dodecane		
Octylphenyldiisobutyl-carbamoylmethylphosphine oxide (CMPO)		
Organicstrip		
Perchlorocarbons		
Phosphine oxide		
Phosphines		
Pyridine	AC, AC2, SA	D038, F005: used as solvent in organometallic synthesis process.
Sodium dithionate		
Tetrachloroethylene	AD, APD, CV	D039 and F002 apply to AD and APD. However no codes apply to CV because this chemical was only used as a coolant outside the glovebox.
Tetraethylamine hydrochloride		
Tetraethylamine hydroxide		
Tetraethylammonium hydroxide		
Tetrahydrofuran	AC, AC2, SA	~~The applicability of U213is yet to be determined~~. Copy wording from Table 6 of TA-55-19-20
Thionyl chloride		
Toluene	AC, AC2, SA	F005 applies because toluene was used as a solvent in organometallic synthesis
Tributyl phosphate (TBP)		
Tributyl phosphate (TBP)/Isopar		
Trichloroethylene	CK, ME, XO	D040 applies to P/S codes ME and XO; F002 also applies to P/S code XO. Neither EPA HWN applies to P/S code CK because this chemical was used as a coolant outside the glovebox.
Vacuum pump oil		

Table 5. Evaluation of the Applicability of EPA Hazardous Waste Numbers to Processes Discussed in This Report

P/S Code	Description	Potential EPA Hazardous Waste Numbers (HWNs)			Applicable HWNs
		Due to Feed (from Table 1 and text)	Due to Chemical Use (from Table 4)	Due to Process*	
AC	Actinide Chemistry, R&D	None	D011, D018, D022, F002, F005, ~~U213~~	D007, D008, D009	D007, D008, D009, D011, D018, D022, F002, F005 (~~U213 applicability to be determined~~)
AC1	Actinide Chemistry, R&D	None	D011, D018, D022, F002, F005	D007, D008, D009	D007, D008, D009, D011, D018, D022, F002, F005
AC2	Actinide Chemistry, R&D	None	D011, D018, D022, F002, F005, ~~U213~~	D007, D008, D009	D007, D008, D009, D011, D018, D022, F002, F005 (~~U213 applicability to be determined~~)
AC3	Actinide Chemistry, R&D	None	None	None	None
ACL	Analytical Chemistry Laboratory	None	None	D007, D008, D009	D007, D008, D009
AD	Actinide Processing Demonstration	D004, D005, D006, D007, D008, D009, D010, D011, D019	D008, D019, D039, F002, F003	D007, D008, D009	D004, D005, D006, D007, D008, D009, D010, D011, D019, D039, F002, F003
APD	Actinide Processing Demonstration	D008, D009, D019, D021, D022, D039, F002, F003	None	D007, D008, D009	D007, D008, D009, D019, D021, D022, D039, F002, F003
AX	Solution Assay	None	None	D007, D008, D009	D007, D008, D009
CK	RD&D Volatile Fluoride Pu Recovery	D005, D006, D007, D008, D011	None	D007, D008, D009	D005, D006, D007, D008, D009, D011
CV	R&D Experimental Chlorination Processes	D005, D006, D007, D008, D011	D019, D039	D007, D008, D009	D005, D006, D007, D008, D009, D011, D019, D039
EDC	Electrolytic Decontamination	D007	None	D007, D008	D007, D008
EOC	Experimental Oxide Characterization	None	None	D007, D008, D009	D007, D008, D009
EXT	Extraction RD&D	D005, D006, D007, D008, D011	None	D007, D008, D009	D005, D006, D007, D008, D009, D011
FDL	FOOF Demonstration Loop	D005, D006, D007, D008, D011	None	D007, D008, D009	D005, D006, D007, D008, D009, D011
FLU	Fluorination RD&D	D005, D006, D007, D008, D011	None	D007, D008, D009	D005, D006, D007, D008, D009, D011
HRS	High Resolution Spectroscopy	None	None	D008	D008

P/S Code	Description	Potential EPA Hazardous Waste Numbers (HWNs)			Applicable HWNs
		Due to Feed (from Table 1 and text)	Due to Chemical Use (from Table 4)	Due to Process*	
IB	Matrix Study Of Pyrochemical Salts	D005, D006, D007, D008, D011	None	D007, D008, D009	D005, D006, D007, D008, D009, D011
ICP	ICP–AES Analysis	None	None	D007, D008, D009	D007, D008, D009
IE	Isotope Enrichment	D005, D006, D007, D008, D011	None	D007, D008, D009	D005, D006, D007, D008, D009, D011
LI	XF6 Experimental Measurements	D005, D006, D007, D008, D011	None	D007, D008, D009	D005, D006, D007, D008, D009, D011
LIBS	Laser-Induced Breakdown Spectroscopy System	None	None	None	None
ME	Metallography	None	D040, F003	D007, D008	D007, D008, D040, F003
NCD	Nonconfirming Drums	None	None	None	None
RASS/ RSS	Raman Spectroscopy System	D004, D005, D006, D007, D008, D009, D010, D011, D019	None	D007, D008, D009	D004, D005, D006, D007, D008, D009, D010, D011, D019
RD	Repackaging into Retrievable Drums	None	None	D008	D008
SA	Super Acid RD&D	None	D018, D038, F002, F003, F005, ~~U213~~	D007, D008, D009	D007, D008, D009, D018, D038, F002, F003, F005 ~~(U213 applicability to be determined)~~
SMP	SP Mounting Preparation	None	None	None	None
SO	Super Oxidizer, FOOF Program	D004, D005, D006, D007, D008, D009, D010, D011	None	D007, D008, D009	D004, D005, D006, D007, D008, D009, D010, D011
STF	Standard Fabrication	None	None	D007, D008	D007, D008
VS	Confirmation, Inspection & Sampling	None	None	D008	D008
WM	Waste Management	Must be determined on case-by-case basis			**D007, D008, D009, D022, D035, D040, F001, F002, F005
X0	Inactive or Unspecified P/S Material	Must be determined on case-by-case basis			**D007, D008, D009, D022, D035, D040, F001, F002, F005
XES	X-Ray Energy Spectroscopy	D004, D005, D006, D007, D008, D009, D010, D011	None	D007, D008, D009	D004, D005, D006, D007, D008, D009, D010, D011

Activities under P/S codes LIBS, NCD, and SMP do not generate solid waste to which any HWN would be applicable.

~~The applicability of EPA HWN U213 (tetrahydrofuran) to waste from P/S codes AC, AC2 and SA is yet to be determined.~~

5.0 VERIFICATION THAT IGNITABLE, REACTIVE, AND CORROSIVE WASTES WERE EXCLUDED

According to the WIPP WAP, "The prohibition of liquids and containerized gases prevents the shipment of corrosive, ignitable, or reactive wastes." Administrative controls on waste packaging were in place at various times to ensure the absence of such items from the waste stream.

- Liquids were prohibited from solid waste streams at TA-55 when the facility opened in January 1978. A waste management procedure written to cover operations at the new facility, *TA-55 Standard Operating Procedure (SOP) 406-GEN-R00*, stated that "Liquids are not permitted in any container of solid waste materials" (TWCP-3943).

- Chemical Waste Disposal Requests introduced in June 1980 included checkboxes which the waste generator was required to check if the waste contained corrosive acids or bases, or pyrophoric, flammable, corrosive, explosive, toxic, carcinogenic or highly reactive materials.

- The Certification Plan (TWCP-697) and related Generator Attachments (TWCP-701) were implemented in 1987. Waste generators were required to sign a statement on the WODF documenting that the waste contained "no free liquids, pyrophorics, explosives, compressed gases, powders or materials other than the indicated matrix." Checkboxes were also present for indicating the presence or absence of corrosive chemicals. Full implementation of this generator statement occurred in May 1987.

- Waste management inspectors perform visual examination of the waste prior to its initial packaging, thus allowing the inspectors to verify the generator's WODF statement (TWCP-701, Sections 3.8.5 to 3.8.6).

- In addition to the above-mentioned prohibitions on explosives in wastes, explosives were prohibited from TA-55 until installation of the Impact Test Facility in the early 1990s. Explosives continue to be banned in the solid waste streams up to the present time. If a misfire should occur, the requirement is to destroy the unspent powder by burning (TWCP-4720).

- The Waste Profile Request Form (WPRF), in use since 1991, includes a statement that must be authenticated by the waste generator, that the waste is not ignitable (flash point >200°F), reactive, or corrosive.

Attachment 3 - Acceptable Knowledge Source Document Summary

Site(s): Los Alamos National Laboratory	Source Document Tracking Number: D036
Waste Stream Number(s): LA-CIN01.001, LA-MHD01.001, LA-MIN02-V.001, LA-MIN04-S.001 (Applicable only when site library is not in use)	
Acceptable Knowledge Documentation Type: ☑ TRU Waste Management Program Information ☑ Waste Stream-Specific Information ☐ Additional Information	Category: ☐ C - Correspondence ☑ D - Documents ☐ M - Miscellaneous ☐ P - Procedures ☐ DR - Discrepancy Resolution ☐ U - Unpublished Documents
Title or Description of Source Document [a]: Process Knowledge Report for Nitrate Operations at TA-55	
Source Document Reference Information (author(s), document and revision number, date, publisher): J. Musgrave, TWCP-AK-2.1-005, Rev 2, 05/17/01, University of California	

AK # [b]	Source Doc. Page # [c]	AK Information Summary
WS3	xi, 4	Waste stream volume and time period of generation. Re: waste from 1979, when nitrate operationds first began at TA-55
PR4, WS4	vi-xl, 4-42	Waste generating processes. Basically, nitrate operations recovered Pu from metal and other residues to produce purified Pu oxide or other feedstock for conversion to metal. Major processes were pretreatment, dissolution, purification, evaporation, and cement fixation. 43 other processes included in nitrate operations are also described.
PR2, WS7	x, 3	Description of mission and defense relationship.
WS11	xi, 44-47	Radioisotopic composition information. Pu isotopes, Am-241, Np-237, U-234, Pa-231, Cm-244, Th-232, and Cs-137 are listed.
WS8, WS12	xi, 7, 11, 13-16, 18-19, 43-44, 46, 48-52, 54	RCRA constituents are listed, although they are described as varying over different time periods. They include F002, F003, D004, D005, D006, D007, D008, D009, D010, D011, D019, D021, D022, D039, D040. No K or P codes were applicable. Also, no PCBs are believed to have been used in nitrate operations.
WS1	x	This AK report covers retrieveably stored and newly generated, mixed and non-mixed debris and waste immobilized in cement. Waste from nitrate operations consists primarily of debris waste, including cellulose-based waste, plastic-based waste, rubber, metal debris, and glass debris; and wast immobilized in cement.

CCP RECORDS ORIGINAL
DATE REC'D 12/13/2012
N 12/13/12

Attachment 3 - Acceptable Knowledge Source Document Summary (continued)

Site(s): Los Alamos National Laboratory	Source Document Tracking Number: D036
Source Document Data Limitations (If any): 1. Waste stream designation not available	
Acceptable Knowlege Expert: Amy Johns, Amy Johns Date: 12/3/2012 Print /Sign	

[a] Provide description for non-titled information (i.e., container paperwork, MSDS sheets, etc)
[b] Obtain from Acceptable Knowledge Documentation Checklist
[c] For microfilm or microfiche, identify box, tape, reel number and location.

Attachment 3 - Acceptable Knowledge Source Document Summary

Waste Stream Number(s): LA-CIN01.001, LA-MHD01.001, LA-MIN02-V.001

Site(s): Los Alamos National Laboratory	Source Document Tracking Number: D036
Acceptable Knowledge Documentation Type: ✔ TRU Waste Management Program Information ✔ Waste Stream-Specific Information Supporting Information	Category: C - Correspondence ✔ D - Documents M - Miscellaneous P - Procedures DR - Discrepancy Resolution U - Unpublished Documents

Title of Source Document: TA-55 Plutonium Facility Acceptable Knowledge Report, Nitrate Operations

Source Document Reference Information (author(s), document and revision number, date, publisher): J. Musgrave, TWCP-AK-2.1-005, Rev 2, 05/17/01, University of California

AK # [a]	Source Doc. Page # [b]	AK Information Summary
WS3	xi, 4	Waste stream volume and time period of generation. Re: waste from 1979, when nitrate operationds first began at TA-55
PR4, WS4	vi-xi, 4-42	Waste generating processes. Basically, nitrate operations recovered Pu from metal and other residues to produce purified Pu oxide or other feedstock for conversion to metal. Major processes were pretreatment, dissolution, purification, evaporation, and cement fixation. 43 other processes included in nitrate operations are also described.
PR2, WS7	x, 3	Description of mission and defense relationship.
WS11	xi, 44-47	Radioisotopic composition information. Pu isotopes, Am-241, Np-237, U-234, Pa-231, Cm-244, Th-232, and Cs-137 are listed.
WS8, WS12	xi, 7, 11, 13-16, 18-19, 43-44, 46, 48-52, 54	RCRA constituents are listed, although they are described as varying over different time periods. They include F002, F003, D004, D005, D006, D007, D008, D009, D010, D011, D019, D021, D022, D039, D040. No K or P codes were applicable. Also, no PCBs are believed to have been used in nitrate operations.
WS1	x	This AK report covers retrieveably stored and newly generated, mixed and non-mixed debris and waste immobilized in cement. Waste from nitrate operations consists primarily of debris waste, including cellulose-based waste, plastic-based waste, rubber, metal debris, and glass debris; and wast immobilized in cement.

ORIGINAL

SG 2-17-09

Attachment 3 - Acceptable Knowledge Source Document Summary

Waste Stream Number(s): LA-CIN01.001, LA-MHD01.001, LA-MIN02-V.001, LA-MIN04-S.001

Site(s): Los Alamos National Laboratory	**Source Document Tracking Number:** D037
Acceptable Knowledge Documentation Type: ✔ TRU Waste Management Program Information ✔ Waste Stream-Specific Information ✔ Supporting Information	**Category:** C - Correspondence ✔ D - Documents M - Miscellaneous P - Procedures DR - Discrepancy Resolution U - Unpublished Documents

Title of Source Document: Los Alamos TRU Waste Certification Plan for Newly Generated TRU Waste

Source Document Reference Information (author(s), document and revision number, date, publisher): B. Reich, WCP-HES7-CPL-01, 2, 11/01/84, LANL

AK # [a]	Source Doc. Page # [b]	AK Information Summary
PR4	28	For processes generating more than a single container of homogeneous waste, each data sheet for the process was to be labeled with a code assigned to the applicable process batch. Process batch records were to be maintained for 25 years by the generator.
PR4, PR5, WS10	29-30, 32-33, Appendix D	Minimum required documentation for TRU waste included a Certified Waste Storage Record (shown in Appendix D) with completed sections on Generator's Package Information and Generator Site Health Physics Information. Data packages were to be retained by HSE-7 for 25 years and stored on microfilm. Also, a "WIPP Data Package" was to be produced by HSE-7 in accordance with WIPP-DOE-157 "Data Package Format for Certified Transuranic Waste for the Waste Isolation Pilot Plant." Each data sheet was reviewed for validity and compliance with this certification plan. As part of the certification plan attachment each generator was required to prepare, for each waste form, a content code was to be assigned by HSE-7, as well as a waste stream description and/or flow chart and packaging such as liners and inner containers. The content codes that might have been used by the Liquid Waste facility were 0002 "cemented sludge" and 0003 "dewatered sludge." Cemented sludge is defined as caustic sludge stabilized with Portland cement and packaged in drums with 5-mil plastic liners. Dewatered sludge is defined as caustic sludge containing 30-45% solids and packaged in drums "with 90 mil and 5 mil plastic liners and dry Portland cemented" to absorb any separating liquids. A detailed description of the waste-generating process was NOT required. Generators were to address each certification criterion separately and specify how each would be met. Procedures for handling nonconforming drums were also to be specified.
PR8, WS10, S16	22-26	The only WIPP-acceptable container was a 55-gallon DOT 17-C steel drum. This was the "preferred TRU waste drum." Containers were to be visually inspected prior to use and be identified in data packages by its serial number or lot code. Corrosive waste (defined as pH <=4.0) was prohibited unless neutralized or treated or packaged "to ensure package integrity through the packaging design life." It was also to be listed on required documentation. Removable radioactive contamination was to be measured in at least three places on the drum surface and kept below WIPP limits of 50 pCi/100 cm2 alpha or 450 pCi/100 cm2 beta-gamma. Drums were to be labeled with a unique serial number of thirteen characters and the package weight in kg. The first four characters were LA for LANL and two numbers indicating the calendar year of package closure. The fifth and sixth numbers were the last two digits of a code on the Certified Waste Storage Record. The last 7 digits were taken from a tag supplied by HSE-7. If overpacked, the packaged were to be assigned new numbers. Color coded bands were also required for drums with surface dose rate > 10 mrem/hr, containing toxic constituents, or having combustible vol% > 25%.

ORIGINAL

Attachment 3 - Acceptable Knowledge Source Document Summary (continued)

Site(s): Los Alamos National Laboratory	Source Document Tracking Number: D036
Source Document Data Limitations (if any): 1. Waste stream designation not available	
Acceptable Knowlege Expert: Amy Johns / Amy Johns Date: 3/6/08 Print /Sign	
[a] Obtain from Acceptable Knowledge Documentation Checklist [b] For microfilm or microfiche, identify box, tape, reel number and location.	

LA-UR-02-1715
LA-UR-01-2555
D036 AK-6
TWCP 15414

TA-55 PLUTONIUM FACILITY
ACCEPTABLE KNOWLEDGE REPORT

REPORT TITLE: Process Acceptable Knowledge Report for Nitrate Operations at TA-55

REPORT NUMBER: TWCP-AK-2.1-005,R.2 (LA-UR-01-2555)

WASTE GENERATED FROM PROCESS/STATUS CODES: AL, AO, AP, AS, AT, ATL, BAC, BF, BL, BM, BU, CC, CD, CF, CH, COD, COL, CPOD, CR, DF, DP, DS, ED, ETD, EV, FA, FC, FX, GMS, HC, HCD, HD, HGMS, HP, HRA, IA, IS, LC, LG1, LG2, LR, MAG, MAS, MB, MELL, MF, ML, MPD, NC, NL, NR, OD, OH, OY, PA, PAF, PR, PS, PT, PTS, RB, RBJ, RC, RCM, RFX, RO, RR, SC, SP, SSD, SX, TDC, UPS, US, US2, VC, VP1, VP2, VP3, VUL, ZD

EFFECTIVE DATE: 05/17/01

NEXT REVIEW DATE: 05/17/03

DOCUMENT PREPARER:

John Musgrave	5/7/01
NAME	DATE

APPROVALS:

June Fabryka-Martin	5/7/01
INDEPENDENT TECHNICAL REVIEWER/EDITOR	DATE
Mavis R Lin	5/12/01
SITE PROJECT MANAGER	DATE
Sandy Wander	5/14/01
WASTE CERTIFICATION OFFICIAL	DATE
M A Gavett	5/14/01
SITE PROJECT QA OFFICER	DATE
Charles L. Foxx	5/7/01
FACILITY REPRESENTATIVE	DATE

© 2000, 2001 University of California

HISTORY OF REVISIONS

Revision No.	Date	Pages Revised	Reason for Change
0	06/23/00	—	New report (TWCP-03940)
1	12/04/00	All	Make report a controlled document and respond to CAR-00-036
2	05/17/01	All	Respond to CBFO review comments and update to include new AK information
2/IC1	03/21/02	All	Clarification to procedure and SME updates

CONTENTS

Section **Page**

ACRONYMS iv

TA-55 PROCESS/STATUS (P/S) CODE INDEX vi

PROCESS ACCEPTABLE KNOWLEDGE SUMMARY x

1.0 INTRODUCTION 1

2.0 METHODOLOGY USED TO SEARCH FOR AK RECORDS 1

3.0 DESCRIPTION OF THE PROCESS WASTE 3
- 3.1 Facility and Mission 3
- 3.2 Basis, Rationale, and Assumptions Used to Delineate the Waste Streams 3
- 3.3 Waste Physical Form and Content Description 4
- 3.4 Waste Volume and Time Period of Waste Generation 4
- 3.5 Waste Generation Processes 4
- 3.6 Material Inputs to the Waste Generation Process 42

4.0 ASSIGNMENT OF EPA HAZARDOUS WASTE NUMBERS 50
- 4.1 F, K, and P Listings 50
- 4.2 Toxicity Listings 50

5.0 VERIFICATION THAT IGNITABLE, REACTIVE, AND CORROSIVE WASTES WERE EXCLUDED 52

6.0 VERIFICATION THAT INCOMPATIBLE CHEMICALS WERE PROHIBITED 53

7.0 VERIFICATION THAT THERE ARE NO COMPRESSED GASES, FREE LIQUIDS, NONRADIONUCLIDE PYROPHORICS, SEALED CONTAINERS GREATER THAN FOUR LITERS IN VOLUME, OR >1% RADIONUCLIDE PYROPHORICS 53

8.0 VERIFICATION THAT THERE ARE NO POLYCHLORINATED BIPHENYLS (PCBs) IN THE WASTE STREAM 54

9.0 CITED PROCEDURES AND REQUIREMENTS DOCUMENTS 54

Table
1. Process Feed Material for Nitrate Operations 43
2. P/S Codes with Radionuclides Other Than Pu in Feed Materials 44
3. Average Isotopic Content of Plutonium Material Types and Enrichments 47
4. Secondary Radionuclides in Process Wastes 47
5. Chemical Inputs to Processes Described in This Report 48

Attachments
1. Acceptable Knowledge Roadmap (21 pages)
2. LANL and TA-55 Site Maps (2 pages)
3. Timeline for Nitrate Operations (10 pages)
4. Process Inputs and Outputs (15 pages)
5. Generalized Process Status Diagram for Nitrate Processes (1 page)
6. Decision/Discrepancies Resolution Documentation (2 pages)

ACRONYMS

AK	acceptable knowledge
AK Information Summary	*Los Alamos National Laboratory Transuranic Waste Characterization Acceptable Knowledge Information Summary* (TWCP-PLAN-0.2.7-001)
CFR	*Code of Federal Regulations*
CLS	Chemistry and Laser Science [Division]—former name of C Division
CSMO	Central Scrap Management Office
D	RCRA hazardous waste number prefix for wastes with hazardous characteristics, defined in 40 CFR Subpart C, Sections 261.21 to 261.24
DL	discard limit
DOE	U.S. Department of Energy
DOR	direct oxide reduction
DTP	detailed technical procedure
DWLS	Discardable Waste Log Sheet
EPA	U.S. Environmental Protection Agency
F	RCRA hazardous waste number prefix for hazardous wastes from non-specific sources, defined in 40 CFR Subpart D, Section 261.31
FFTF	Fast Flux Test Facility
HEPA	high efficiency particulate air
HWN	[EPA] hazardous waste number
K	RCRA hazardous waste number prefix for hazardous wastes from specific sources, defined in 40 CFR Subpart D, Section 261.32
LANL	Los Alamos National Laboratory
LLW	low-level [radioactive] waste
MSE	molten salt extraction
MT	material type
N	Nitrate [designator for individual documents in nitrate operations reports in Attachment 1, Acceptable Knowledge Roadmap]
OSWER	Office of Solid Waste and Emergency Response [EPA]
P	RCRA hazardous waste number prefix for acute hazardous waste defined in 40 CFR Subpart D, Section 261.33
PCB	polychlorinated biphenyl
PF-4	Plutonium Facility, Building 4
P/S [code]	process status [code]
PVC	polyvinyl chloride
QA	quality assurance
R&D	research and development
RCRA	Resource Conservation and Recovery Act
RD&D	research, development, and demonstration
RLWTF	Radioactive Liquid Waste Treatment Facility
RMDC	Records Management/Document Control
SME	subject matter expert
SOP	safe/standard operating procedure
TA	technical area

TOPO	trioctyl phosphate oxide
TRU	transuranic
TWCP	Transuranic Waste Characterization/Certification Project
UCNI	Unclassified Controlled Nuclear Information
WAC	waste acceptance criteria
WIPP WAC	*Waste Acceptance Criteria for the Waste Isolation Pilot Plant* (DOE/WIPP-069)
WIPP WAP	Attachment B, Waste Analysis Plan, to the *Hazardous Waste Facility Permit Issued to the Waste Isolation Pilot Plant* (EPA No. NM4890139088)
WIPP	Waste Isolation Pilot Plant
WODF	Waste Origination and Disposition Form
WPRF	Waste Profile Request Form

TA-55 PROCESS/STATUS (P/S) CODE INDEX

NOTE: This index indicates the main process AK report and report section that covers each P/S code mentioned in this report.

P/S Code	P/S Name	Process AK Report*
AL	Ash Leach	Nitrate Operations
AO	Americium Processing Calcination	Nitrate Operations
AP	Americium Purification	Nitrate Operations
AS	Anode Heel Dissolution	Nitrate Operations
AT	Ash Testing	Nitrate Operations
ATL	Advanced Test Line for actinide separation (RD&D)	Nitrate Operations
BAC	Bacterial Decomposition of Cellulose Items	Nitrate Operations
BF	Unknown name for this P/S code	Nitrate Operations
BL	Blending	Nitrate Operations
BM	Burning Metal	Nitrate Operations
BU	Button Burning	Nitrate Operations
CC	Calcination	Nitrate Operations
CD	Hydroxide Cake Dissolution	Nitrate Operations
CF	Cement Fixation	Nitrate Operations
CH	Characterization	Nitrate Operations
CK	RD&D Volatile Fluoride Pu Recovery	Miscellaneous Operations
CL	Crucible Processing	Chloride Operations
CN	C-N-O Analysis	Metal Operation Processes
COD	Chlorinated Oxide Dissolution	Nitrate Operations
COL	Chlorinated oxide leach	Nitrate Operations
CPOD	Catalyzed Electrochemical Plutonium Oxide Dissolver	Nitrate Operations
CR	Crushing and Pulverizing	Nitrate Operations
CS	Chloride Solutions	Chloride Operations
CX	Chloride Anion Exchange	Chloride Operations
DF	DS Furnace and Oxide Preparation	Nitrate Operations
DP	Dry Processing	Nitrate Operations
DS	Ion Exchange	Nitrate Operations

P/S Code	P/S Name	Process AK Report*
ED	Cascade Dissolver	Nitrate Operations
ETD	Experimental Thermal Decomposition	Nitrate Operations
EV	Evaporator	Nitrate Operations
FA	Americium Processing	Nitrate Operations
FC	Canning	Nitrate Operations
FX	Cement to Drum	Nitrate Operations
GMS	Open Gradient Magnetic Separation	Nitrate Operations
HC	Calcination	Nitrate Operations
HCD	Hydroxide Cake Dissolution	Nitrate Operations
HD	Hydroxide Cake Dissolution	Nitrate Operations
HGMS	High Gradient Magnetic Separation	Nitrate Operations
HP	Cement Fixation	Nitrate Operations
HRA	Hanford Reservation Materials	Nitrate Operations
IA	Impure Americium Holding for Discard	Nitrate Operations
IB	Matrix Study of Pyrochemical Salts	Miscellaneous Operations
IS	Incinerator	Nitrate Operations
LC	Uranium/plutonium Processing	Nitrate Operations
LG1	Noncombustible Leach	Nitrate Operations
LG2	Hydroxide Cake Dissolution	Nitrate Operations
LR	Ion Exchange	Nitrate Operations
MAG	Magnetic Separation	Nitrate Operations
MAS	RD&D Experimental Processes	Nitrate Operations
MB	Nitric Dissolution of Molten Salts	Chloride Operations Nitrate Operations
MELL	Mediated Electro-Oxidation of LLW	Nitrate Operations
MF	Metals Furnace	Nitrate Operations
ML	Non Pu Metal Leach	Nitrate Operations
MPD	Cascade Dissolver	Nitrate Operations
NC	Noncombustible Leach	Nitrate Operations
NL	Noncombustible Leach	Nitrate Operations
NR	Nitrate Recovery	Nitrate Operations

P/S Code	P/S Name	Process AK Report*
OD	Oxide Dissolution	Nitrate Operations
OH	Hydroxide Precipitation	Nitrate Operations
OY	Oxalate Precipitation	Nitrate Operations
PA	Passivation	Nitrate Operations
PAF	Passivation Furnaces	Nitrate Operations
PR	Peroxide Precipitation	Nitrate Operations
PS	Peroxide Precipitation of MSE Salts	Nitrate Operations
PT	Plutonium Thorium Separation	Nitrate Operations
PTS	RD&D Pretreatment Study	Nitrate Operations
RB	Roasting and Blending	Nitrate Operations
RBJ	Roasting & Blending Jr	Nitrate Operations
RC	Rotary Calciner	Nitrate Operations
RCM	Rich Column Material Ion Exchange	Nitrate Operations
RFX	Ion Exchange	Nitrate Operations
RO	Oil Recovery	Nitrate Operations
RR	Ion Exchange	Nitrate Operations
SC	Cascade Dissolver, G437	Nitrate Operations
SE	Solvent Extraction	Chloride Operations
SO	Super Oxidizer, FOOF Program	Miscellaneous Operations
SP	Scrap Dissolution, G438	Nitrate Operations
SSD	Special Scrap Dissolution	Nitrate Operations
SX	Americium Processing Silicon Removal	Nitrate Operations
TDC	Thermal Decomposition of Cellulose Items R&D	Nitrate Operations
UPS	Uranium/plutonium Separation	Nitrate Operations
US	Uranium Separation for Solid Solution Feed	Nitrate Operations
US2	Uranium Separation for Non-solid Solution Feed	Nitrate Operations
VC	Variable CSMO Scrap Dissolution	Nitrate Operations
VP1	CSMO Scrap Dissolution	Nitrate Operations
VP2	Polycube Processing	Nitrate Operations

P/S Code	P/S Name	Process AK Report*
VP3	Hydroxide Precipitation	Nitrate Operations
VUL	Vessel Unloading	Nitrate Operations
ZD	Scrap Oxide Dissolution	Nitrate Operations

* Process AK reports: Chloride Operations (TWCP-AK-2.1-002,R.2), Metal Operations (TWCP-AK-2.1-003,R.2), Miscellaneous Operations (TWCP-AK-2.1-004,R.2), and Nitrate Operations (this report)

PROCESS ACCEPTABLE KNOWLEDGE SUMMARY

Waste-generating process: Nitrate Operations

P/S codes: AL, AO, AP, AS, AT, ATL, BAC, BF, BL, BM, BU, CC, CD, CF, CH, COD, COL, CPOD, CR, DF, DP, DS, ED, ETD, EV, FA, FC, FX, GMS, HC, HCD, HD, HGMS, HP, HRA, IA, IS, LC, LG1, LG2, LR, MAG, MAS, MB, MELL, MF, ML, MPD, NC, NL, NR, OD, OH, OY, PA, PAF, PR, PS, PT, PTS, RB, RBJ, RC, RCM, RFX, RO, RR, SC, SP, SSD, SX, TDC, UPS, US, US2, VC, VP1, VP2, VP3, VUL, ZD

Type of waste generated:

Retrievably stored and newly generated, mixed and non-mixed debris; waste immobilized in cement

Site: LANL

Facility Mission (including defense and non-defense programs):

TA-55 has extensive capabilities for the extraction and recovery of plutonium from residues and scraps generated from operations at various LANL facilities and other DOE sites in the defense complex. The recovered plutonium is converted into pure plutonium feedstock. These manufacturing and recovery operations, as well as associated maintenance operations, and TA-55 plutonium research are the sources of TRU waste contaminated scrap, residues, and debris generated at TA-55. The scrap and residues are processed to recover as much plutonium as practicable before disposal. Wastes from nitrate operations are generated from plutonium recovery and purification for defense and non-defense programs; these wastes are generated and produced in the same rooms and gloveboxes and so were not segregated until August 27, 1998.

Area(s) or building(s) where the process waste was generated (including operations carried out in those areas):

Process wastes from nitrate operations are generated in Building PF-4, Rooms 208, 401, 409, 420, and 434, of the TA-55 Plutonium Facility. Plutonium operations included reclaiming plutonium from scrap and residues produced from numerous feed sources.

Description of the process waste (physical form and typical content description):

Waste from nitrate operations consists primarily of debris waste, including cellulose-based waste, plastic-based waste, rubber, metal debris, and glass debris; and waste immobilized in cement.

Summary Category Group: S3000, S5000

Waste Matrix Codes: S3000, S3100, S3200, S5100, S5300, S5400

Description of the waste-generating process:

The overall goal of the nitrate operations is to recover plutonium from metal, metal alloys, scrap, and residues and produce a purified plutonium oxide product or feedstock for conversion to

metal. Processes include pretreatment, dissolution, purification, evaporation, and cement fixation.

Process feed:

Plutonium metal or metal alloys, oxides and hydroxide cakes; pyrochemical salts; crucible pieces; anode heels; ash; analytical laboratory solutions; and residues from other DOE facilities.

Radioisotopic content of the waste:

Variety of plutonium material types with different well-defined isotopic compositions. Am-241, Np-237, and U-234 may be present at detectable concentrations as decay products of their plutonium precursors. Some of the processes separate plutonium and americium, or plutonium and uranium, so that the waste will usually be enriched in Am-241 or U-234, but may also be depleted in some cases. Pa-231, Cm-244, and Cs-137 may be present in trace amounts due to their widespread presence as contaminants in TA-55 operations.

RCRA Constituents/EPA Hazardous Waste Numbers:

- F002 and F003: P/S codes CF and HP
- No K or P codes
- D004, D010: P/S code HRA prior to 1984
- D008: all P/S codes except NR in nitrate operations for the generation of leaded gloves
- D005: P/S codes COL, CD, DS, HCD, HD, LR, RCM, RFX, RR
- D005, D006, D007, D008, D011: P/S codes AL, AT, ATL, ED, ETD, IS, MPD, PTS, RC, SC, TDC
- D005, D006, D007, D008, D009, D011: P/S code HRA
- D005, D008: P/S code VUL
- D006, D007, D008: P/S codes OD, RB, RBJ, SP, SSD
- D006, D007, D008, D009, D011: P/S codes AO, CD, DS, EV, FX, HCD, HD, HGMS, IA, LG2, LR, MELL, OH, RCM, RFX, RR
- D006, D007, D008, D011: P/S codes AS, BF, BU
- D006, D008: P/S codes LG1, ML, NC, NL, VC
- D006, D008, D040: P/S code RO
- D007: P/S codes PT, SP
- D007, D008 , D009, D011, D019, D021, D022, D039: P/S codes CF, HP
- D007, D009: P/S codes AP, MB
- D009: P/S codes AL, ATL, ED, MPD, SC, VP1, VP3
- D011: P/S code CPOD

Process waste volume (if known):

Waste volumes for each P/S code have not been tracked. Instead, waste items are segregated into similar material types and packaged in waste containers. Waste containers are segregated into waste streams in the Sampling Plan, and waste stream volumes are reported in that document.

Years of generation for the process waste: 1979–present

PROCESS ACCEPTABLE KNOWLEDGE REPORT FOR NITRATE OPERATIONS AT TA-55

1.0 INTRODUCTION

All transuranic (TRU) waste must be sufficiently characterized and certified before it is shipped to the Waste Isolation Pilot Plant (WIPP). The U.S. Environmental Protection Agency (EPA) allows use of acceptable knowledge (AK) for waste characterization. EPA uses the term AK in its guidance document, *Waste Analysis at Facilities that Generate, Treat, Store and Dispose of Hazardous Waste.* Attachment B, Waste Analysis Plan, to the *Hazardous Waste Facility Permit Issued to the Waste Isolation Pilot Plant* (EPA No. NM4890139088) (WIPP WAP) defines AK and provides guidelines on how AK should be obtained and documented.

This process AK summary report was prepared in accordance with *Acceptable Knowledge Documentation* (TWCP-QP-1.1-021). The primary purpose of this report is to systematically organize, evaluate, and summarize detailed AK information about individual processes that generated TRU waste in the Plutonium Facility at Technical Area (TA) 55, one of the TRU-waste generators at Los Alamos National Laboratory (LANL). By doing so, this report provides detailed technical support for several waste stream AK summary reports that include these process wastes.

2.0 METHODOLOGY USED TO SEARCH FOR AK RECORDS

The AK search for the information related to TA-55 waste streams resulting from nitrate operations covered:

- Review of the *Los Alamos National Laboratory Transuranic Waste Characterization Acceptable Knowledge Information Summary* (TWCP-PLAN-0.2.7-001,R.5) (AK Information Summary) that includes information regarding all TRU waste streams

- Review of documents related to waste generation and waste management activities at TA-55 as listed on the Acceptable Knowledge Roadmap (Attachment 1)

- Interviews with personnel involved with waste generation and waste management at TA-55 as listed on the Acceptable Knowledge Roadmap (Attachment 1)

NOTE: Much of the AK information related to nitrate operations is contained in Transuranic Waste Characterization/Certification Project (TWCP) Record Nos. TWCP-3548, TWCP-3566, TWCP-3567, and TWCP-3568. Individual documents in these records have been assigned a separate identifier, N-nn, where nn is a sequential 1- or 2-digit number. This referencing nomenclature is used throughout this report and its attachments.

- Analyses of individual processes generating waste, and evaluations of the potential for Resource Conservation and Recovery Act (RCRA)-regulated constituents to be

present in the process wastes, based on subject matter expert (SME) interviews and any relevant data

The TWCP Records Management/Document Control (RMDC) Center contains copies of the documents referenced in this report. Unclassified Controlled Nuclear Information (UCNI) is contained in these records, and will not be included in this report. Such records are identified as UCNI in the Acceptable Knowledge Roadmap (Attachment 1).

This process AK report is part of a set of closely related reports about TRU-waste generating activities at TA-55. For convenience in organizing AK for plutonium processing at this facility, the processes were categorized into six operational areas. The multiple processes in each area are described in detail in the following six process AK reports for plutonium:

- *Process Acceptable Knowledge Report for Chloride Operations at TA-55* (TWCP-AK-2.1-002)
- *Process Acceptable Knowledge Report for Metal Operation Processes at TA-55* (TWCP-AK-2.1-003)
- *Process Acceptable Knowledge Report for Miscellaneous Operations at TA-55* (TWCP-AK-2.1-004)
- *Process Acceptable Knowledge Report for Nitrate Operations at TA-55* (TWCP-AK-2.1-005) (this report)
- *Process Acceptable Knowledge Report for Pyrochemical Processes at TA-55* (TWCP-AK-2.1-006)
- *Process Acceptable Knowledge Report for Special Processing at TA-55* (TWCP-AK-2.1-007)

Each process AK report contains information on multiple individual processes that are assigned unique identifiers called process/status (P/S) codes. For example, nitrate operations include over 80 individual processes that are each assigned a P/S code, as listed on the cover page of this report. The search and compilation of AK information was based on P/S code because that is the most detailed level of process information generally recorded in waste generation records. The process AK reports frequently cross-reference one another because P/S codes in one operational area often provide the material feed for P/S codes in another area. An index of P/S codes cited in this process AK report follows the list of acronyms; this index lists process descriptions and the primary process AK report in which that P/S code is discussed.

When discrepancies in AK information are discovered, they are documented and resolved in accordance with *Acceptable Knowledge Documentation* (TWCP-QP-1.1-021). The resulting documentation is found in Decision/Discrepancies Resolution Documentation (Attachment 6).

3.0 DESCRIPTION OF THE PROCESS WASTE

The following sections describe processes used in nitrate operations, and identify the resulting wastes as well as outputs that are sent to other operations, such as pyrochemical operations, for further processing.

3.1 Facility and Mission

The TA-55 Plutonium Facility (Building PF-4) recovers plutonium from scrap and residues generated throughout the U.S. Department of Energy (DOE) defense complex, and processes it into pure plutonium oxide for conversion to metal and other products. A LANL site map and a detailed map of the buildings at TA-55, including Building PF-4, are shown in Attachment 2.

Most processes in nitrate operations were solely defense related (TWCP-614, TWCP-4162). However, wastes from various processes were not segregated by funding source, waste-generating process, or waste-generating location (e.g., room or glovebox) until recently (August 27, 1998), but rather were segregated and packaged based on waste type (TWCP-887, TWCP-4162, TWCP-4167). Consequently, a single waste container often contains wastes from multiple processes. Some debris waste was also co-mingled with room trash related to these same operations (both defense and non-defense), and was initially boxed as low-level waste. Subsequently, some of these waste boxes were returned for disposal in drums as TRU waste when on-site radioassay results showed them exceeding the low-level discard limits (DLs) (TWCP-816).

3.2 Basis, Rationale, and Assumption Used to Delineate the Waste Streams

The basis for delineation of TA-55 waste streams was established by the evolving set of LANL and TA-55 waste management plans and site-specific procedures, which date back to the start of operations at the Plutonium Facility in 1978 (TWCP-352, TWCP-697, TWCP-700, TWCP-701, TWCP-3943). The stated guidance and practice from the beginning, continuing to the present day, has been to handle and package all combustible and noncombustible debris waste in a similar fashion, regardless of the process (i.e., P/S code) of origin. Inspection, collection, documentation and packaging operations of solid, certifiable TRU wastes at TA-55 are conducted in PF-4 by a waste management section or team (TWCP-352, TWCP-700, TWCP-701, TWCP-3943). Wastes from all TRU waste-generating activities at TA-55 are handled and packaged into waste containers by this team based on the material content of the waste, without regard to P/S code. Materials are considered waste only when they have been received and processed by the waste management team.

Assignment of a particular waste container to a waste stream is then made on the basis of waste generator information compiled in the AK Information Summary. Waste generator information is reviewed to identify the types and sources of waste items present in each drum, to evaluate the most appropriate waste

summary group, waste matrix code, and potential for the presence of hazardous constituents. In the AK Information Summary, TA-55 wastes have been assigned to waste streams based on the waste segregation schemes used by TA-55:

- By radioisotope content (Pu-238 or Pu-239 material type)
- By material matrix (combustible, noncombustible, metal, glass, etc. waste types)
- By hazardous waste status (mixed, non-mixed, or special case waste streams)

3.3 Waste Physical Form and Content Description

Wastes generated during nitrate operations are primarily debris wastes and wastes entered into the cement fixation process or sent to the Radioactive Liquid Waste Treatment Facility (RLWTF) at TA-50. General debris waste categories from nitrate operations include

- Cellulose-based waste (for example, paper, cloth)
- Plastic-based waste (for example, gloves, tape, labware)
- Rubber
- Magnesium oxide crucibles
- Metal debris (for example, wire, hose clamps, tools, labware)
- Glass debris

These debris items are contaminated with small amounts of radioactive and chemical substances from nitrate operations. The cemented waste includes cemented organics and cemented inorganics, including emulsified oils.

3.4 Waste Volume and Time Period of Waste Generation

This report covers waste streams generated from 1979, when nitrate operations first began at TA-55, to the present. Process wastes from nitrate operations have different associated EPA hazardous waste numbers (HWNs) depending on the time period during which they were generated. The P/S codes, their time period of generation, and corresponding EPA HWNs are shown graphically in Attachment 3, Time Lines.

Waste volumes for each P/S code have not been tracked. Instead, waste items are segregated into similar material types and packaged in waste containers. Waste containers are assigned to waste streams in the AK Information Summary, and waste stream volumes are reported in that document.

3.5 Waste Generation Processes

The following subsections describe the generation of waste by nitrate operations, as well as product and waste outputs to other processes or operations.

Manufacturing and research operations performed at TA-55 in the production of plutonium also generate plutonium-contaminated scrap and residues. These residues are processed to recover as much plutonium as is practical. TA-55 has extensive capabilities for the extraction and recovery of plutonium from residues and scraps generated from operations at various LANL facilities and other DOE sites. These recovery and manufacturing operations, associated maintenance operations, and TA-55 plutonium research are the sources of TRU waste generated at TA-55. Detailed background information about the TA-55 plutonium recovery processes can be found in *Waste from Plutonium Conversion and Scrap Recovery Operations* (TWCP-352 and TWCP-886).

This report addresses the aqueous nitrate-based recovery processes. The primary feed source for the nitrate recovery operations is plutonium residues from other recovery operations (e.g., chloride or pyrochemical), metal preparation, metal fabrication, analytical laboratory operations, and residues from other DOE facilities (TWCP-3548/N-1). The overall goal of the nitrate recovery operations is to recover plutonium from scrap and residues and produce a purified plutonium oxide for conversion to metal. The nitrate recovery operations can be divided into the following process steps:

- Pretreatment
- Dissolution
- Purification, including conversion to oxide
- Cement fixation

Each of these process categories is described below. The timeframe and EPA HWNs associated with each P/S code are shown on the timelines included as Attachment 3; the dates can be correlated to the dates on the procedures listed in Attachment 1. Attachment 4 contains a complete listing of P/S codes for nitrate operations, their descriptions, feed materials, chemical inputs, outputs and applicable EPA HWNs. A simplified process flow diagram for nitrate operations is found in Attachment 5.

3.5.1 Pretreatment (P/S codes BL, BM, BU, CR, DP, ETD, GMS, HGMS, IS, MAG, MAS, MF, OH, OY, PA, PAF, PTS, RC, RO, TDC, VP2, VUL)

Pretreatment primarily includes physical processes used to prepare scrap and residues for the next step, dissolution (TWCP-3548/N-1). Pretreatment may have included any or all of the following processes: calcination (RC), caustic leaching, chemical separation (hydroxide or oxalate precipitation), crushing and pulverizing (CR), distillation, filtering of liquids or oils, incineration (IS), magnetic separation (GMS, MAG, MAS, HGMS), passivation (PA, PAF), scraping, and sorting (TWCP-3548/N-1 through N-18). As materials are received from various operations within TA-55, they are sorted and sent to other pretreatment processes or directly to dissolution depending on the

physical nature of the scrap or residue and on the amount and type of plutonium associated with the material. Loose plutonium may be brushed off of a scrap item and then the item sent to dissolution. Chunks of plutonium-bearing residue (e.g., sand, slag, crucibles) are sent for crushing and pulverizing (CR). Magnetic plutonium-bearing materials are sorted using magnetic separation (GMS, MAG, MAS, HGMS) into either lean or rich plutonium-bearing residues (TWCP-3548/N-1 and N-2). The lean plutonium-bearing residues are sent to cement fixation (CF) if plutonium concentrations are below the DL (TWCP-3548/N-1 and N-2). Finely divided plutonium in sweepings or powder form is sent directly to dissolution. Lapping or grinding oils are filtered if necessary, and the liquid portion is sent to P/S code CF for immobilization in cement, or to P/S code RO for absorption on vermiculite, if plutonium concentrations are below the DL (TWCP-3548/N-10 and N-15). If there are a significant quantity of filtered solids, they are calcined and sent to dissolution (TWCP-3568/N-82).

Thermal pretreatment processes have also been used to prepare plutonium-bearing materials for dissolution (TWCP-3548/N-1). Passivation (PA, PAF) converts pyrophoric plutonium metal and other reactive metals to a stable oxide prior to dissolution. These materials were heated in a tube furnace to approximately 600 °C (PA, PAF) (TWCP-3548/N-7 and N-11). Cellulose materials contaminated with plutonium (e.g., cheesecloth, wood, paper, cardboard) have been incinerated (IS) or thermally decomposed (TDC) (TWCP 3548/N-1, N-5, N-6, N-7, N-11, and N-12). Ash from the incinerator was sent to a calciner (P/S code RC) to remove any residual organic materials and to ensure complete oxidation prior to dissolution. Thermal decomposition of cellulose (P/S code TDC) is performed in an argon atmosphere and the vapors and particulate matter are trapped in a caustic scrubber (TWCP 3548/N-6 and N-12, TWCP 3568/N-82). The caustic solution generated by the scrubber is sent to the TA-50-1 RLWTF after meeting the TA-50-1 waste acceptance criteria (WAC) (TWCP-3548/N-12). The wash water is filtered and sent to purification if plutonium concentrations are above the DL, or to the TA-50-1 RLWTF if it meets the TA-50-1 WAC. The rags are disposed as debris waste or thermally decomposed (TDC) (TWCP 3548/N-4, TWCP 3568/N-76). The ash from the thermally decomposed rags was rotary calcined (RC) before it was sent to dissolution (TWCP 3568/N-79). The burning of plutonium metal (BM), anode heels, and oxides was used to prepare these materials for either dissolution or storage in the vault (TWCP 3548/N-13 and N-14). Distillation was used to recover plutonium from polystyrene cubes (VP2) (TWCP 3548/N-18).

A caustic (hydroxide) leach process has been used to pretreat electro-refining furnace scrapings from the Rocky Flats Plant, and other residues

high in chlorides. Chlorides were removed using sodium hydroxide and the treated residues were then dissolved in nitric and hydrofluoric acid (TWCP 3566/N-26, N-26A, and N-30E). In this case, the caustic solution would be sent to the TA-50-1 RLWTF if it met the TA-50-1 WAC, and the filtered solids would continue through the dissolution process.

In overview, particulate solids from the pretreatment step are sent to dissolution if plutonium concentrations are above the DL and to cement fixation (CF) if concentrations are below the DL (TWCP-3548/N-1 through N-18). Liquids are sent to purification if plutonium concentrations are above the DL and to the RLWTF if they meet the TA-50-1 WAC (TWCP-3548/N-1 through N-18). Chemicals used in the pretreatment steps are listed in Table 5 in Section 3.6.3. Chemicals used in these steps that are covered by 40 *Code of Federal Regulations* (CFR) Part 261, including Appendix VIII of those regulations, are (1) hydrofluoric, nitric, oxalic, and sulfuric acid, (2) potassium and sodium hydroxide, (3) hydrogen peroxide (an oxidizer), and (4) trichloroethylene. EPA HWNs D001 and D002 do not apply to the solid wastes despite the use of acids, bases and an oxidizing solution in these processes because there is no free liquid in these wastes. Trichloroethylene was only used in 1979 in P/S code RO, as a diluent for filtering oils (not used for solvent properties [TWCP-3548/N-10 and N-18]). Thus, the EPA HWN D040, but not F002, applies to waste generated under P/S code RO during 1979.

Additional EPA HWNs apply to most of these P/S codes as a result of the presence of regulated chemicals in the feed materials (see Table 1 in Section 3.6) or as a result of contamination introduced from the use of laboratory equipment or supplies or from glovebox maintenance operations (section 4.2). Leaded gloves and other lead-containing items were discarded as described in section 3.6.1.

NOTE: For some of these P/S codes, no formal procedures could be found and the necessary information was extracted from process flow diagrams and SME input. More detailed descriptions of such P/S codes that are included in this pretreatment section are provided in section 3.5.6, as follows: P/S codes BL, BU, DP, ETD, HGMS, MF, PA, PTS, RC, RO, and VP2.

3.5.2 Dissolution (P/S codes AL, AS, AT, ATL, BAC, CD, COD, COL, CPOD, ED, HCD, HD, LC, LG1, LG2, MB, MELL, ML, MPD, NC, NL, NR, OD, PS, PT, SC, SP, SSD, UPS, US, US2, VC, VP1, ZD)

Dissolution is comprised of numerous processes that generate a plutonium-nitrate solution for feed to a purification process (TWCP-

3548/N-1, TWCP-3568/N-79). The main chemicals used in dissolution are nitric acid and calcium fluoride and/or hydrofluoric acid, which together form a standard leach solution. Additionally, other chemicals are used for particular dissolution processes. Depending on the particular process involved, dissolution takes place in pots or in cascade systems. Debris waste items may be wiped with a cloth soaked in a nitric acid/calcium fluoride solution to recover surface contamination of plutonium. The cloths are dunked in water a few times and wrung out (TWCP-3568/N-82). The solutions from the cloths are collected and filtered. The solids from the solutions are recycled through the dissolution process if plutonium concentrations are above the DL, or sent to cement fixation or disposed as debris waste if concentrations are below the DL (TWCP-3548/N-1, TWCP-3568/N-79). The plutonium-bearing solutions were sent to purification. The cloths are reused if they are not falling apart; otherwise, they are discarded as solid waste or sent to incineration (IS), depending on the nuclear material content (TWCP-3568/N-82).

Plutonium on the surface of metal and noncombustible debris waste items is also recovered by leaching or dipping the waste item into the standard leach solution (ML, NC) (TWCP-3548/N-1, TWCP-3566/N-22, N-29, N-30, and N-31, TWCP-3568/N-79). Plutonium-bearing solutions are sent to purification, while the leached items below the DL are discarded. Lead-containing waste items (e.g., leaded gloves) below the DL are segregated, packaged separately, and assigned the EPA HWN D008 (TWCP-3567/N-39). Other leached metal items containing RCRA-regulated heavy metals are also segregated from metal debris that is not RCRA-regulated and are assigned the appropriate EPA HWNs (e.g. D006 for cadmium) (TWCP-3568/N-84).

From the late 1970s to the present, many plutonium-bearing materials are dissolved in a standard leach solution of nitric and hydrofluoric acid after appropriate pretreatment or preparation (TWCP-3566/N-30A through N-30F, TWCP-3568/N-79). These materials include alloys, anodes, carbides, casting skulls, electrorefining residues, metals, and plutonium oxide. After dissolution, solids are discarded if below the DL or recycled if above the DL, while solutions are sent to purification. These solutions contain dissolved heavy metals (e.g., lead, cadmium, mercury, or chromium) below the regulatory levels (TWCP-3568/N-82). These metals may be concentrated to above the regulatory levels in the purification step (as a hydroxide cake) or in the evaporator step, as addressed later in this report.

Starting in 1990, plutonium oxide was also dissolved using an electrochemical process that incorporated the chemicals found in the standard leach solution as well as ferric ammonium sulfate, potassium

thiocyanate, and silver nitrate (CPOD) (TWCP-3548/N-1 and TWCP-3566/N-21). The electrochemical cell used in this process relied on silver acting as a catalyst for the dissolution of plutonium. Waste from this process was considered suspect hazardous for the presence of silver and was assigned the EPA HWN D011. This process was replaced in 1994 by a similar electrochemical process (P/S code MELL) that used cobalt nitrate or cerium nitrate in place of silver nitrate to reduce the generation of hazardous and mixed waste at TA-55 (TWCP-3548/N-1 and TWCP-3566/N-33).

Two dissolution processes were designed to remove excess silica from either solid residues during dissolution or from plutonium-bearing solutions after dissolution (TWCP-3567/N-34 and N-35). In both these processes, silica was removed from solutions prior to sending them to purification. One process involved the following steps: adjusting the acidity of the feed solution using nitric acid; distilling to concentrate the solution; oxidizing the plutonium to a valence state of +4 with hydrogen peroxide; heating the solution until the excess hydrogen peroxide is destroyed; and filtering the solution to remove the silica solids (TWCP-3567/N-34). The solution from this process went to anion exchange purification process. The second silica-removal process used a hydrofluorinator with a potassium hydroxide scrubber solution (TWCP-3567/N-35). The solution from this process was sent to the TA-50-1 RLWTF via the caustic waste line if the plutonium content was below the DL or to the lean residue ion exchange (LR) purification process if the content was above the DL. The filtered silica solids from both processes were re-dissolved if plutonium concentrations were above the DL or disposed to cement fixation (CF) if concentrations were below the DL.

Uranium-plutonium oxide mixtures were leached using nitric acid to preferentially dissolve the uranium (UPS) (TWCP-3566/N-19). Aluminum nitrate was added to the solution to complex any fluoride ion that might be present. The uranium-bearing filtrate was disposed to cement fixation (CF). The plutonium-bearing solids were sent to dissolution (ED, MPD, or SP) and then to either an anion-exchange process or the oxalate-precipitation process (OY) for purification.

A caustic (hydroxide) leach process has been used to pretreat electro-refining furnace scrapings from the Rocky Flats Plant and other residues high in chlorides. Chlorides were removed using sodium hydroxide, and the treated residues were then dissolved in nitric and hydrofluoric acid (TWCP-3566/N-26, N-26A, and N-30E). The filtered solids continued through the dissolution process. If the plutonium content in the solution was above the DL, the solution was refiltered (TWCP-3566/N-26). If the

plutonium content was below the DL, the caustic solution was disposed to the TA-50-1 RLWTF (TWCP-3566/N-26A).

Several dissolution processes involved the use of cascading dissolvers or dissolution pots (AL, AT, ED, MPD, OD, SC, SP) (TWCP-3548/N-1). The choice of dissolution equipment is based on the concentration of plutonium present in the feed material and the physical form of the feed material. Feed materials include ash, glovebox sweepings, ground slag or crucibles, oxides, residues, salts, and sand (TWCP-3566/N-23, N-24, N-25, and N-28; TWCP-3567/N-36, N-37, and N-37A).

For P/S code OD, the feed materials came from P/S codes PAF, IB, RB, and RBJ (TWCP-3568/N-81). The possible impurities in the feed materials consisted of cadmium, chromium, and/or lead. These metals would be contained in the filtrate, which was sent to the ion exchange processes for further purification. The debris waste generated from this process is not expected to contain cadmium, chromium, or lead above the regulatory limits because the dissolution involved strong acids (any soluble metals should be in the filtrate). However, without analytical data or other acceptable information confirming that the concentrations of these hazardous constituents are below the regulatory levels, the applicable EPA HWNs (D006, D007, and D008) are assigned pending additional information (TWCP-3568/N-83).

Cascading dissolvers consist of a series of heated columns into which the standard leach solution is introduced along with aluminum nitrate in some instances. Air is bubbled through the columns to promote mixing of the solutions and to keep particles in suspension. Solution from the first column overflows to the second column and so on (TWCP-3548/N-1; TWCP-3566/N-23, N-24, N-24A, and N-25; TWCP-3567/N-36). After dissolution in the dissolvers, the solutions are filtered and then sent to purification. The filtered solids are sent to other dissolution processes if plutonium concentrations are above the DL, or to cement fixation (CF) or disposed as debris waste if concentrations are below the DL.

Another feed material for the nitrate operations is hydroxide filtrate cakes from the chloride operations (TWCP-3548/N-1). This material is dissolved using the standard leach solution, which is then filtered (CD, HCD, HD) (TWCP-3566/N-32). Aluminum nitrate is added to the solution and the solution is re-filtered. The filtrate is sent to purification. Filtered solids are re-dissolved if plutonium concentrations are above the DL, or disposed to cement fixation (CF) if concentrations are below the DL. From 1985 to 1994, the hydroxide cakes from the chloride operations contained cadmium, chromium, lead, mercury, and silver (TWCP-3567/N-39 and N-40). After 1994, silver is not present in the cakes. The debris waste generated from the dissolution of hydroxide

cakes from the chloride operations is not expected to contain the listed metals above the regulatory limit. However, without analytical data or other acceptable information confirming that the concentrations of these hazardous constituents are below the regulatory levels, the applicable D-codes (D006, D007, D008, D009, and D011) are assigned pending additional information (TWCP-3568/N-83).

In overview, filtered solids from the dissolution step are re-dissolved until plutonium concentrations are below the DL, then sent to cement fixation (CF); debris items are disposed after the plutonium contamination is removed from the surface by leaching; plutonium-bearing solutions are sent on to purification or to the metal preparation line (P/S code MP) (TWCP-3548/N-1; TWCP-3566/N-21 through N-33; TWCP-3567/N-34 through N-36).

Chemicals used in the dissolution steps are listed in Table 5 in Section 3.6.3. Chemicals used in these steps that are covered by 40 CFR Part 261, including Appendix VIII of those regulations, are (1) ascorbic, formic, hydrochloric, hydrofluoric, nitric, oxalic, and sulfuric acid; (2) potassium and sodium hydroxide, (3) hydrogen peroxide (an oxidizer), and (4) mercuric and silver nitrate (TWCP-3566/N-21, N-22, N-23, N-24, N-25, N-28, N-29, N-30B, N-30C, N-30D, N-30E, N-30F, N-31, N-32, and N-33; TWCP-3567/N-34, N-35, N-36, N-37, and N-37A; TWCP-3568/N-81). EPA HWNs D001 and D002 do not apply to the solid wastes despite the use of acids, bases and an oxidizing solution in these processes because there is no free liquid in these wastes. Mercuric nitrate was used as a catalyst in P/S code VP1, which is accordingly assigned the EPA HWN for mercury, D009. Silver nitrate was used in P/S code AT and CPOD, which are therefore assigned the EPA HWN for silver, D011.

Additional EPA HWNs apply to most of these P/S codes as a result of the presence of regulated chemicals in the material feed (see Table 1 in Section 3.6) or as a result of contamination introduced from the use of laboratory equipment or supplies or from glovebox maintenance operations (discussed in section 4.2). For example, RCRA-regulated hazardous constituents introduced to the nitrate operation at the dissolution step from hydroxide filtrate cakes include cadmium, chromium, lead, mercury, and silver (TWCP-3567/N-39, N-40). Leaded gloves were discarded as described in section 3.6.1.

NOTE: For some of these P/S codes, no formal procedures could be found and the necessary information was extracted from process flow diagrams and SME input. More detailed descriptions of such P/S codes that are included in this dissolution section are provided in section 3.5.6, as

follows: P/S codes AS, BAC, COD, COL, LC, LG1, LG2, MB, NL, NR, PS, PT, SSD, US, US2, VC, VP1, and ZD.

3.5.3 Purification and Oxide Conversion (P/S codes AO, AP, CC, CH, DF, DS, FA, FC, HC, LR, OH, OY, PR, RB, RBJ, RCM, RFX, RR, SX, and VP3)

A peroxide precipitation process (PR) was used to achieve excellent separation of plutonium from the cationic impurities calcium, chromium, magnesium, cesium, cobalt, and aluminum, as well as americium (TWCP-3567/N-52). Peroxide was added to the oxide dissolution filtrate feed material to convert the plutonium to valence state (+4). Additional peroxide resulted in the precipitation of Pu_2O_7. The resulting peroxide filter cake was dissolved in nitric acid and the solution was sent to oxalate precipitation (OY). The filtrate solution from the peroxide precipitation was sent to hydroxide precipitation (OH), also known as the peroxide kill process.

Plutonium-bearing solutions generated in the dissolution step are directed to purification for plutonium recovery (TWCP-3548/N-1). Purification consists of both ion exchange and precipitation processes. There are three primary ion exchange processes based on the concentration of plutonium in solution: rich feed (RCM), dissolver solutions (DS), and lean residue (LR). After ion exchange, plutonium-bearing solutions are directed to oxide precipitation and then to an oxidation process. The oxidation process generates plutonium oxide, a stable form of plutonium suitable for storage or further processing into plutonium metal.

The ion exchange processes use resin-filled columns to collect plutonium (P/S codes DS, RCM, LR, RR, RFX) (TWCP-3548/N-1; TWCP-3567/N-41, N-42, N-43, N-44, N-46, N-47, and N-53). The pH of incoming solutions is adjusted with nitric acid and the plutonium is stabilized by changing the plutonium valence state to (+4) using hydrogen peroxide. Other chemicals used to adjust acidity or to "condition" incoming solutions to address the presence of fluoride, silica, metal impurities, or plutonium (+6) include: aluminum nitrate, ferrous ammonium sulfate, hydrogen peroxide, sodium hydroxide, sodium nitrite, sulfuric acid, and urea. Certain intermediate solutions used to condition the ion exchange feed, especially caustic solutions used to "kill" the peroxide, are filtered and then sent to the TA-50-1 RLWTF if they meet the TA-50-1 WAC.

If solutions high in americium are "conditioned" with hydrogen peroxide, an americium hydroxide precipitate forms when the solutions are dripped into sodium hydroxide to "kill" the peroxide (TWCP-3567/N-55). This precipitate is dissolved using nitric acid, sent

through an ion exchange column, and then sent on to the oxalate precipitation process to recover the americium and convert it to americium oxide (P/S codes AO, AP, FA, and SX).

Plutonium (+4) binds to the resin while impurities such as americium, uranium, and other metals flow through the columns (TWCP-3548/N-1; TWCP-3567/N-41, N-42, N-43, N-44, N-46, and N-47). The plutonium remains on the resin in the (+4) valence state until an eluting agent (hydroxylamine nitrate or 0.35-1.0 M nitric acid) is flowed through the columns. This releases purified plutonium in solution for further processing (i.e., precipitation and oxidation). The plutonium-poor solutions or effluents from the ion exchange columns are sent to the evaporator (EV) for re-concentration. Ion exchange resins are reconditioned using nitric acid; spent ion exchange resins are periodically sent to cement fixation (CF) for disposal.

After ion exchange, plutonium-bearing solutions are sent on to a precipitation process (P/S codes OY and OH) to convert the plutonium solution to plutonium oxide (TWCP-3548/N-1; TWCP-3567/N-41, N-42, N-43, N-47, N-48, N-50, N-51, N-51A, and N-53; TWCP-3568/N-79). This process involves the addition of oxalic acid to form a plutonium oxalate precipitate. The precipitate is then filtered out of the solution, washed, dried, and converted to an oxide using calcination, heat lamps, or hot plates. The plutonium solutions are either sent to the evaporator (EV) for volume reduction or, for a short time, were treated with hydroxide precipitation.

Hydroxide cakes from the chloride operations, which started in 1985 (TWCP-3567/N-40), are introduced to the nitrate operations in the dissolution step (TWCP-3567/N-39). The outputs from the dissolution of chloride operations hydroxide cakes are sent to P/S code LR or DS. Therefore, RCRA-regulated hazardous constituents associated with the feed materials from the chloride operations may carry through to P/S codes DS and LR (TWCP-3567/N-38). The hazardous metal constituents contained in hydroxide cakes from 1982 (based on the start of the chloride operations) until 1994, include cadmium, chromium, lead, mercury, and silver (TWCP-3567/N-40). Beginning in 1994, only cadmium, chromium, lead, and mercury are expected to be present. These metals may be present above the regulatory limits in the waste streams generated by P/S codes DS and LR. Therefore, the EPA HWNs D006, D007, D008, D009, and D011 are assigned to the waste from 1982 to 1994; and D006, D007, D008, and D009 are assigned from 1994 forward.

In overview, plutonium oxide from the purification step is transferred to the vault for storage or to the metal preparation line; solutions are sent to

the evaporator for re-concentration and then returned to ion exchange or sent to P/S codes CF or HP for immobilization in cement. The distillates are sent to the RLWTF if they meet the TA-50 WAC. Spent ion exchange resins are sent to cement fixation (CF) (TWCP-3567/N-41 through N-53).

Chemicals used in the dissolution steps are listed in Table 5 in Section 3.6.3. Chemicals used in these steps that are covered by 40 CFR Part 261, including Appendix VIII of those regulations, are (1) hydrofluoric, nitric, and oxalic acid; (2) sodium hydroxide, and (3) hydrogen peroxide (an oxidizer)(TWCP-3567/N-41 through N-47, N-50, N-51, N-53, N-54, and N-55; TWCP-3568/N-81). EPA HWNs D001 and D002 do not apply to the solid wastes despite the use of acids, bases and an oxidizing solution in these processes because there is no free liquid in these wastes.

However, EPA HWNs apply to most of these P/S codes as a result of the presence of regulated chemicals in the material feed (see Table 1 in Section 3.6) or as a result of contamination introduced from the use of laboratory equipment or supplies or from glovebox maintenance operations (discussed in section 4.2). For example, RCRA-regulated hazardous constituents introduced to P/S codes DS and LR with the hydroxide filtrate cakes include cadmium (D006), chromium (D007), lead (D008), mercury (D009), and silver (D011) (TWCP-3567/N-39 and N-40). Similarly, plutonium oxide from the vault may have been roasted and blended in P/S codes RB and RBJ to provide a more homogeneous feed for the metal preparation line (P/S code MP); these oxides may have contained cadmium (D006), chromium (D007), and lead (D008) (TWCP-3567/N-56, N-57, N-57A, and N-57B). Leaded gloves were discarded as described in section 3.6.1.

NOTE: For some of these P/S codes, no formal procedures could be found and the necessary information was extracted from process flow diagrams and SME input. More detailed descriptions of such P/S codes that are included in this purification section are provided in section 3.5.6, as follows: P/S codes AO, AP, CC, CH, DF, FA, FC, HC, and VP3.

3.5.4 Evaporator (P/S code EV)

Plutonium-poor ion exchange effluents and oxalate precipitation filtrates are sent to the evaporators to re-concentrate plutonium, if possible, and reduce the volume of disposed waste (TWCP-3548/N-1, TWCP-3568/N-61 through N-65). General facility maintenance solutions (e.g., wet vacuum water, mop water, chiller water) are also sent to the evaporator if they do not meet the TA-50-1 WAC (TWCP-3568/N-76). The wet

M110
111
112
113
M210

vacuum water and chilled circulating water are contaminated with nitric acid, hydrochloric acid, or caustic solutions having the same characteristics as those sent to the TA-50-1 RLWTF, only richer in nuclear material content (e.g., diluted processing solutions) (TWCP-3568/N-82). The mop water is taken back into the evaporator only if it has a significant nuclear material content, which means that it originated in the processing solutions before escaping the confines of the glovebox system. There has never been an indication that spilled materials included a solvent.

Plutonium-poor solutions are collected in storage tanks and sent to the evaporators in batches of up to 600 liters (TWCP-3548/N-1; TWCP-3568/N-61 through N-65). These solution batches are then concentrated to approximately 25-liter volumes called "bottoms." As the bottoms cool, salts precipitate out and settle on the bottom of cooling trays. After cooling, the bottoms are sent back to ion exchange if plutonium concentrations are above the DL or to cement fixation (CF) if concentrations are below the DL. Attempts are made to re-dissolve settled salts, but if this is not possible, the bottoms are filtered and the salts are sent to dissolution if plutonium concentrations are above the DL or disposed as uncemented (debris) waste or sent to cement fixation (CF) if concentrations are below the DL. Nitric acid is used in the evaporator process to wash nitrate salts having a plutonium concentration above the DL. Except for approximately one year in 1990/1991, no other chemicals are used in the evaporator step in addition to those found in the ion exchange effluents and oxalate precipitation filtrates waste (TWCP-3548/N-1; TWCP-3558/N-61 through N-65). In the 1990/1991 timeframe, formic acid was added to the evaporator as an experiment to decrease the nitric acid concentration (by converting nitrate to nitrogen oxides) (TWCP-3568/N-76).

Chemicals used in the evaporator that are covered by 40 CFR Part 261, including Appendix VIII of those regulations, are nitric and formic acid. However, EPA HWNs D001 and D002 do not apply to the solid wastes from the evaporator because there is no free liquid in these wastes.

However, EPA HWNs apply to waste from P/S code EV as a result of the presence of regulated chemicals in the evaporator feed material. Hydroxide cakes from chloride operations, which started in 1982 (TWCP-3567/N-40), are introduced to nitrate operations in the dissolution step (TWCP-3567/N-39). Therefore, RCRA-regulated hazardous constituents associated with the feed materials from chloride operations may carry through from dissolution to P/S codes DS and LR to the evaporator (TWCP-3567/N-38). The hazardous constituents contained in the hydroxide cakes from 1982 (based on the start of the chloride operations) until 1994 include cadmium (D006), chromium

(D007), lead (D008), mercury (D009), and silver (D011) (TWCP-3567/N-39 and N-40). After 1994, only cadmium, chromium, lead, and mercury are expected to be present. Analysis of evaporator bottoms at TA-55 and statistical evaluation of analytical results using control charts have also shown that chromium, lead and mercury are above regulatory limits in this waste (TWCP-3568/N-66).

3.5.5 Cement Fixation (P/S codes CF, HP, IA)

In the cement fixation step, various wastes with plutonium concentrations below the DL from nitrate and other operations at TA-55 are collected and immobilized in cement for interim and long-term storage (TWCP-3548/N-1; TWCP-3568/N-67 through N-74). Cement fixation has been carried out in 55-gallon drums under P/S code CF, and in one-gallon cans under P/S code HP (TWCP-3568/N-72).

The cement fixation process came into existence in 1980 under what became P/S code HP. The following information was provided by a SME (TWCP-3568/N-81) because documented procedures for this process could not be identified. Wastes sent to P/S code HP for disposal in one-gallon cans included: americium oxide; calcium chloride salts from direct oxide reduction, pyroredox, and salt stripping; chloride solutions; evaporator bottoms; filter aid; glovebox sweepings; graphite powder; high efficiency particulate air (HEPA) filter media; high-fired ash; leached ash residues; leached particulate solids (e.g., sand, slag, crucible parts); passivated uranium carbide; plutonium/thorium fluoride filter cakes; plutonium/thorium hydroxide filter cakes; pump oils; silica solids; spent ion exchange resins; trioctyl phosphine oxide and iodine in kerosene; uranium oxide; and uranium solutions (TWCP-3568/N-72).

Since 1981, the primary feed to this process was the evaporator bottoms solution. Evaporator bottoms were treated by hydroxide precipitation and filtered. The cakes would dry only very slowly so the wet cakes were rolled in plastic bags with Portland cement powder or were stirred in one-gallon cans with Portland cement to make them set. In 1981, hydroxide precipitation was discontinued and the neutralized bottoms solutions were stirred directly with Portland cement powder in one-gallon cans. In January 1983, Gypsum (calcium sulfate) cement powder (also known as Envirostone cement) replaced the Portland cement powder. The evaporator bottoms solution was adjusted to a pH of about 3 for Gypsum cement or to a basic pH (7-10) for Portland cement. The cement powder was then mixed into the solution. Any particulate matter was added during the stirring operations.

Waste oil/organic solutions set up in cement were restricted to TRU vacuum pump oils and mixtures of trioctyl phosphine oxide (TOPO) and iodine dissolved in kerosene. Some of the miscellaneous solutions sent

for cement fixation included analytical chemistry solution residues that contained RCRA-regulated organics or heavy metals. Oils and organic liquids are emulsified by the addition of a surfactant before they are mixed with the neutralized evaporator bottom solutions (TWCP-3568/N-74). The miscellaneous solutions were treated in a manner much like the evaporator bottoms solution.

The discard of impure americium oxide from P/S code AO (section 3.5.6.1) was mostly accomplished by stirring it into a one-gallon can of evaporator bottom cement paste (up to 140 g americium/can). When all cement was being stirred in one-gallon cans, the americium-containing can was placed in the center of the middle layer of cans in a drum to provide maximum shielding. When storage of the impure americium hydroxide cakes in P/S code AO became a radiation exposure problem, a significant portion of the stored material was placed in P/S code IA until the material could be immobilized in cement for disposal. P/S code IA was active from April 1986 to December 1988. It did not involve any type of processing and, therefore, did not generate any waste.

In July 1988, the cementation process was changed from stirring the cement in one-gallon cans to stirring cement monoliths in 55-gallon drums attached to the glovebox (under P/S code CF). Although P/S code HP is still open, it has not been used since July 1988.

NOTE: The strategy proposed for shielding americium-containing cans, after the operation converted to 55-gallon drum monoliths, was to push the one-gallon americium-containing can down into the wet cement paste in the drum. However, the SME did not believe that it was ever attempted.

P/S code CF began in August 1988 and continues to the present time. Wastes collected for disposal in 55-gallon drums include aqueous and organic liquids from analytical chemistry; evaporator bottoms and evaporator salts; fine particulate materials, such as salts filtered from solutions, leached filter paper residues, and ash; oils, organic petroleum-based liquids, and spent ion exchange resins. As was the case for P/S code HP, the primary feed to this process has been the evaporator bottoms solutions. In 1996, the cementation process again converted from Gypsum cement powder (last used in June 1996) back to Portland cement powder (reuse began in July 1996).

Chemicals used in the cement fixation step under P/S codes CF and HP include: cement accelerator, Gypsum cement, nitric acid (pH adjustment), organic liquid emulsifier (which acts as a surfactant), Portland cement, silicon defoamer, sodium citrate retarder, and sodium hydroxide (pH adjustment) (TWCP-3568/N-69, N-71, N-72, N-74).

Phthalate buffer solution for pH 4 and phosphate buffer solution for pH 7 were used in P/S code CF only. EPA HWNs D001 and D002 do not apply to the solid wastes from cement fixation as a result of these chemicals because there is no free liquid in these wastes.

Although RCRA-regulated organics and metals were not used in either of the two cement fixation processes, regulated chemicals were present in the materials sent to be immobilized in cement. Therefore, the waste streams generated by these processes may contain RCRA-regulated solvents and metals above the regulatory limits.

- Analysis of evaporator bottoms at TA-55 between 1994 and 1998 and statistical evaluation of analytical results using control charts have also shown that chromium (D007), lead (D008) and mercury (D009) are above the regulatory limit for this waste (TWCP-3568/N-66).

- Hydroxide cakes from the chloride operations, which started in 1982 (TWCP-3567/N-40), are introduced to the nitrate operations in the dissolution step (TWCP-3567/N-39). Therefore, RCRA-regulated hazardous constituents associated with the feed materials from the chloride operations as well as those derived from other nitrate dissolution processes may carry through to cement fixation (TWCP-3567/N-38). The hazardous constituents contained in the hydroxide cakes from chloride operations include cadmium (D006), chromium (D007), lead (D008), mercury (D009), and silver (D011) (TWCP-3567/N-39 and N-40). The use of silver in chloride operations ended at the end of 1993. After 1993, heavy metal analyses have been conducted on the solutions, with chromium, lead, cadmium, and mercury being detected at levels above the regulatory levels at times.

- Gypsum cement was found to leach heavy metals above regulatory levels, but the Portland cement does not (N-66/TWCP-3568). Thus, the chromium, lead and mercury are no longer considered hazardous after 1995. In addition, arsenic, barium, cadmium, selenium and silver concentrations were all below the regulatory threshold limits for these metals.

- The presence of RCRA constituents in waste analytical chemistry solutions was noted in the data packages beginning in 1990. The RCRA-regulated organic chemicals found in these solutions included carbon tetrachloride (D019), n-butanol (F003), acetone (F003), methanol (F003), tetrachloroethylene (D039, F003), xylene (F003), methylene chloride (F002), chloroform (D022), and chlorobenzene (D021).

Based on this information, the following EPA HWNs apply to P/S codes CF and HP (until cessation of this process in August 1988):

- P/S codes CF and HP. Applicable EPA HWNs for organic chemicals are F002, F003, D019 (carbon tetrachloride); D021 (chlorobenzene), D022 (chloroform); and D039 (tetrachloroethylene).

- P/S code HP (from 1980 to December 1982): Applicable EPA HWNs for heavy metals for waste immobilized in Portland cement are D007 (chromium), D008 (lead), and D009 (mercury).

- P/S codes HP (from January 1983 to July 1988) and CF (from August 1988 to July 1996): Applicable EPA HWNs for heavy metals for waste immobilized in Gypsum cement are D007 (chromium), D008 (lead), D009 (mercury), and D011 (silver, until its use ended in 1992).

- P/S code CF (from July 1996 to the present time): Applicable EPA HWNs for heavy metals for waste immobilized in Portland cement are D007 (chromium), D008 (lead), and D009 (mercury). However, immobilization with Portland cement is an approved treatment and the final waste form is no longer hazardous.

Because P/S code IA simply held excess americium hydroxide cakes from P/S code AO, the EPA HWNs applicable to P/S code AO also apply to P/S code IA. These EPA HWNs are D007, D008, D009, and D011.

3.5.6 Additional P/S codes

Other P/S codes included in the Nitrate Operations, for which no procedures were found during this AK documentation review, are described in this section. The information for these P/S codes was derived from process flow diagrams and SME input (TWCP-3568/N-77 and N-81). The timeframe and EPA HWNs associated with each P/S code are shown on the timelines included as Attachment 3. The inputs, outputs, and applicable EPA HWNs are provided in Attachment 4.

3.5.6.1 Americium Processing Calcination (AO)

This process was active from 1979 to 1984 and from 1986 to 1988 and went through three variations. The process was inactive from 1984 to 1986. From 1979 to 1984, this process received high purity americium oxalate cakes from P/S code FA. These cakes were calcined in a furnace resulting in a pure americium oxide product, which went to the vault and eventually most of this supply was sent to Oak Ridge

National Laboratory for distribution to manufacturers to be used for smoke detectors, well logging, and anti-static brushes. Beginning in February 1986 until about 1987, this process received oxalate cakes from P/S code PS. This impure americium oxalate was calcined to the oxide and sent to the vault as a reserve that could be converted to high purity oxide if a need arose. Finally, from April 1986 to December 1988, impure americium hydroxide cakes were received from chloride ion exchange processing of molten salt extraction salts. Those cakes were calcined and stored in P/S code AO and IA until they were ready for disposal by cement fixation (CF).

RCRA-regulated organic solvents were not used in any variation of this process and were not present in the feed materials; therefore, there would not be any RCRA-regulated solvents in the waste streams generated by this process. RCRA-regulated metals also were not used in this process and were not introduced by the feed materials from P/S codes FA and PS; therefore, there would not be any RCRA-regulated metals in the waste streams generated from 1979 to June 1986. The presence of RCRA-regulated metals in the chloride operations, however, could carry over into this process. Therefore, waste generated from June 1986 to December 1988 may contain concentrations of cadmium, chromium, lead, mercury, and silver above the regulatory level (TWCP-3567/N-39 and N-40), resulting in EPA HWNs D006, D007, D008, D009, and D011 being assigned. The waste stream generated by this process consisted of the usual glovebox waste items.

3.5.6.2 Americium Purification (AP)

This process was performed from 1979 to June 1986, with a period of inactivity from 1984 to early 1986. The nitric acid concentration in americium solutions from P/S code SX was adjusted to 7 molar and passed through an ion exchange column. The plutonium (+4) would bind to the ion exchange resin and the americium (+3) would pass through the column, resulting in a purified americium solution. At the conclusion of the run, the plutonium was eluted off the column by washing the column with 1 molar nitric acid, and the plutonium solution collected separately. The plutonium solution was then sent to one of the plutonium ion exchange columns for recovery of the plutonium.

RCRA-regulated organic solvents and metals were not used in this process and were not present in the feed material from P/S code SX; therefore, there would not be any RCRA-regulated solvents or metals in the waste streams generated by this process. Chemicals, such as hydroxylamine nitrate, were used to adjust the valence of the plutonium. The waste stream generated by this process consisted of the usual glovebox waste items, such as glass vessels, HEPA filters, and rags. Leaded gloves were disposed of as described in Section 3.6.1.

3.5.6.3 Anode Heel Dissolution (AS)

This process was performed from 1980 to November 1988. The plutonium oxide generated as the result of burning anode heels in P/S code BU was dissolved in a nitric acid/hydrofluoric acid mixture or in calcium fluoride, and filtered to remove the nondissolving residues. These residues were dried and collected and sent after assay to P/S code SP for more rigorous dissolution. The filtrate was sent to the rich residue ion exchange column (RR) for purification.

Although RCRA-regulated organic solvents and metals were not used in this process, residual RCRA-regulated heavy metals present in the electrorefining step were concentrated in the anode heels. Therefore, any RCRA-regulated metals in the anode heel feed could also be present in the waste generated by this process. These are cadmium (D006), chromium (D007), lead (D008), and silver (D011). The waste generated by this process includes glassware, plastic filter boats, cleaning rags, HEPA filters, metal cans, and brushes. Leaded gloves were disposed of as described in Section 3.6.1.

3.5.6.4 Bacterial Decomposition of Cellulose Items (BAC)

This process was performed from mid-1995 to mid-1996 and was an alternative to thermal decomposition. The process involved the decomposition of cellulose rags using a living organism to digest the cellulose to glucose and other byproducts. Cheesecloth rags, bacteria, and water were added to a flask and allowed to sit while the bacteria digested the rags. The resulting solution was sent to the lean residue ion exchange (LR).

RCRA-regulated organics and metals were not used in this process and were not introduced by the feed materials;

therefore, there would not be any RCRA-regulated solvents or metals in the waste streams generated by this process.

3.5.6.5 P/S code BF

Activities under this P/S code were nearly identical to those under P/S code BU because the feed was also anode heel metal. Heels were burned under P/S code BF between September 1985 and November 1986 came from the electrorefining step (P/S codes ER or SS) at TA-55. Although RCRA-regulated organic solvents and metals were not used in this process, residual RCRA-regulated heavy metals present in the electrorefining step were concentrated in the anode heels. Therefore, any RCRA-regulated metals in the anode heel feed could also be present in the waste generated by this process. These are cadmium (D006), chromium (D007), lead (D008), and silver (D011). The waste generated by this process includes glassware, plastic filter boats, cleaning rags, HEPA filters, metal cans, and brushes. Leaded gloves were disposed of as described in Section 3.6.1.

3.5.6.6 Blending (BL)

This process was performed from 1979 to May 1988. Various lots of plutonium oxide in the vault or in-house P/S codes were fed into this process. Each container of oxide was weighed, opened, and screened to remove oversized material. The oversized material was ground with a mortar and pestle and rescreened. The individual contents were combined and blended in a V-blender to make a homogeneous lot of feed oxide that was sent as feed to the roasting and blending process (RB).

This is a physical process in which no additional materials or chemicals are used. RCRA-regulated organic solvents and metals were not used in the process and were not introduced with the feed material; therefore, there would not be any RCRA-regulated solvents or metals in the waste streams generated by this process. The waste generated consisted of typical glovebox waste items, such as HEPA filters, glass, ceramic boats and plates, cleaning rags, brushes, metal containers and equipment, and plastics. Leaded gloves were disposed of as described in Section 3.6.1.

3.5.6.7 Button Burning (BU)

This process was performed from approximately 1979 to 1986. Metal buttons were received from offsite DOE facilities (usually Hanford, but possibly Rocky Flats as well). The metal buttons were burned in a furnace at about 600°C. The oxide produced from six buttons was combined and blended to make up a uniform feed lot for the anode heel dissolution process (AS).

Although RCRA-regulated organic solvents and metals were not used in this process, residual RCRA-regulated heavy metals present in the electrorefining step were concentrated in the anode heels. Therefore, any RCRA-regulated metals in the anode heel feed could also be present in the waste generated by this process. These are cadmium (D006), chromium (D007), lead (D008), and silver (D011). The waste generated by this process includes glassware, plastic filter boats, cleaning rags, HEPA filters, metal cans, and brushes. Leaded gloves were disposed of as described in Section 3.6.1.

3.5.6.8 Calcination (CC)

This process was performed from 1979 to November 1988. Plutonium oxalate cakes from the oxalate precipitation process (OY) were calcined by heating in air in a furnace to form pure plutonium oxide. The oxide became feed for the oxide reduction process.

This was a physical process, not involving any chemical reagents. RCRA-regulated organic compounds and metals were not used in this process and were not introduced by the feed materials. The oxalate cakes were of high purity. Therefore, the waste generated from this process would not contain any RCRA-regulated organic compounds or metals. The waste generated from this process consists of the usual glovebox waste items plus metal tools, containers, and equipment; ceramic furnace elements; rags; and brushes.

3.5.6.9 Characterization (CH)

This process was performed from 1979 to February 1989 and received samples of blended lots of oxide from the blending process (BL). Portions of the samples were weighed out for four analyses to demonstrate that the oxide powders met the acceptance criteria for preparation of driver fuel for the Fast

Flux Test Facility (FFTF). The Loss on Ignition Analysis involved heating the powder and measuring the weight loss from driving off adsorbed water and gases. The Surface Area Analysis involved absorption of nitrogen gas on the oxide at liquid nitrogen temperature. The Particle Size Analysis measured the settling rate of oxide particles dispersed in a viscous, water-soluble liquid using the absorption of X-rays by the particles. The slurry was discarded to cement fixation (HP). Finally, some of the powder was pressed into pellets and sintered at 160 degrees C before measuring and weighing them for density. The pellets and oxide residues were packaged separately and sent to the vault as archives and eventually recycled. Oxide powders from other sources were also partially characterized many times. The process was used to make water-dampened plutonium oxide pucks for a criticality experiment and to test the reactivity of calcium nodules from pyrochemical operations.

RCRA-regulated organics and metals were not used in this process and were not introduced by the feed materials. The oxide samples were high-purity materials. Therefore, the waste generated from this process would not contain any RCRA-regulated organics or metals. The waste generated by this process included the usual glovebox waste of HEPA filters, window glass and glass containers, metal containers and tools, brushes, and cleaning rags. Leaded gloves were disposed of as described in Section 3.6.1.

3.5.6.10 Chlorinated Oxide Dissolution (COD)

This process was performed from August 31, 1988 to July 1991. The front-end of this process looked identical to the chlorinated oxide leach process (COL). Chloride pyrochemical salts were dissolved in sodium hydroxide solution and filtered. The filtrate was discarded into the caustic waste line to the TA-50-1 RLWTF or immobilized in cement (CF). The dried plutonium oxide cake was dissolved in a nitric acid-hydrofluoric acid mixture as part of this process, or sent to a cascade dissolver (ED). The solution from the acid dissolution step was filtered and the solids were returned to the dissolution step. The solution volume was reduced by distillation. The distillate was processed in one of the ion exchange columns. The concentrated solution was re-filtered and all of the filter residues were sent to a cascade dissolver (ED) or to the filter residues dissolution process

(SP). The filtrate was sent to one of the ion exchange columns for recovery.

RCRA-regulated organics and metals were not used in this process and were not introduced with the feed materials. The pyrochemical salts should be of high purity. Therefore, the waste generated from this process would not contain any RCRA-regulated organics or metals.

3.5.6.11 Chlorinated Oxide Leach (COL)

This process was performed from June 13, 1989 to June 1991. Chlorinated oxides or plutonium oxide contained in chloride-based pyrochemical salts from Rocky Flats were subjected to leaching with sodium hydroxide. The chloride salts would dissolve in the solution that would then be filtered. If the filtrate met the TA-50-1 WAC, it would be sent into the process caustic waste line at the TA-50-1 RLWTF. If not, it would be sent to cement fixation (CF). The cake containing the plutonium oxide would be dried and sent to the cascade dissolver (ED) or to chlorinated oxide dissolution (COD).

RCRA-regulated organics were not used in this process and were not introduced with the feed materials. RCRA-regulated metals also were not used in this process. However, the Rocky Flats salts that fed this process would contain any barium present in their electrorefining salts. Barium is not expected to be present above the regulatory limits in the waste generated by this process; however, without analytical results or other acceptable information to support this, the EPA HWN for barium (D005) is assigned to the liquid waste sent to cement fixation (CF) (TWCP-3568/N-83). The waste generated by this process consists of the usual glovebox waste, such as glassware, plastic filter boats and tubing, and rags. Leaded gloves were disposed of as described in Section 3.6.1.

3.5.6.12 DS Furnace and Oxide Prep (DF)

This process was performed from 1979 to April 1990. The wet plutonium oxalate cake from the ion exchange process (DS) was placed in a metal can and heated in air in a furnace to dry the cake and then decompose the oxalate to an oxide product. The oxide product was returned to the ion exchange process (DS) prior to being sent to the vault.

RCRA-regulated organics and metals were not used in this process and were not introduced with the feed materials. The oxalate cakes were of high-purity. Therefore, the waste generated from this process would not contain any RCRA-regulated organics or metals. The waste generated by this process consists of the usual glovebox waste items plus metal tools, containers, and equipment; ceramic furnace elements; rags; and brushes.

3.5.6.13 Dry Processing (DP)

This process was performed from 1979 to December 1985 and was the front-end treatment of polycubes, which were blocks of polystyrene with plutonium oxide embedded in them (TWCP-4100). The Hanford polycubes were skinned to remove the uncontaminated surface and perhaps some of the oxide embedded beneath the surface. If the skins met the DL, they would be discarded as plastic waste. If not, the skins would be sent to polycube processing (VP2) along with the bulk of the cube material. In preparation for that treatment, the cubes would be crushed and milled into small fragments.

This is a physical process. RCRA-regulated organics and metals were not used in this process and were not introduced with the feed materials; therefore, the waste generated from this process would not contain any RCRA-regulated organics or metals. The waste generated by this process consists of the usual glovebox waste items plus plastic, metal tools and equipment, rags, and brushes.

3.5.6.14 Experimental Thermal Decomposition (ETD)

This process has been performed from June 4, 1996 to the present. Combustible residues from various P/S codes are heated in a furnace under argon until the organic matrix is volatilized and decomposed, and a carbon-rich residue containing plutonium oxide and impurities remain. This residue is then sent to a rotary calciner (RC) to remove the carbon.

RCRA-regulated organics and metals are not used in this process. Organics may be introduced with the feed materials depending upon the P/S codes from which the materials come; however, any solvents are dissipated during the heating process. The feed materials may initially contain low levels of RCRA-regulated metals, but the thermal decomposition process drives off most of the mass, thereby

concentrating the non-volatile heavy metals. Therefore, the waste generated from this process may contain RCRA-regulated metals (but no organics). The waste generated by this process consists of the usual glovebox waste items plus metal tools, containers, and equipment; rags; brushes; and a water scrub solution from scrubbing the off-gas.

3.5.6.15 Americium Processing (FA)

This process was performed from 1979 to 1984. The 7 molar nitric acid solution from the americium purification process (AP) was distilled to reduce volume, and the acidity was adjusted to a low concentration of approximately one molar prior to oxalate precipitation in P/S code AO. The oxalate filtrate was sent to one of the hydroxide precipitation processes, such as P/S code VP3.

RCRA-regulated organics and metals were not used in this process. RCRA-regulated organics also were not introduced with the feed materials. Therefore, the waste generated from this process would not contain any RCRA-regulated solvents. Any RCRA-regulated metals present as impurities in the feed materials would be contained in the oxalate filtrate sent to a hydroxide precipitation process. However, the process description for P/S code AP does not indicate the presence of metals above the regulatory limit. The waste generated by this process consists of glass vessels, sintered glass frits, HEPA filters, rags, and other glovebox waste discarded as TRU solid waste. Because this is predominantly americium, waste materials were always discarded. Leaded gloves were disposed of as described in Section 3.6.1.

3.5.6.16 Canning (FC)

This process has been run from 1979 to the present. Plutonium oxide coming out of the blending process (BL) for storage in the vault is weighed into a food pack can (approximately 1 kg of oxide per can) and a lid is placed on the can in the canning operation. The can is wiped down with a water-dampened rag and passed out into a hand-held plastic bag in a hood. The plastic bag is sealed with vinyl tape and the unit is canned into a second larger food pack can that is entirely uncontaminated, for storage.

This is a physical process. RCRA-regulated organics and metals are not used in this process and are not introduced with the feed materials. The feed material is high-purity

plutonium oxide. Therefore, the waste generated by this process would not contain any RCRA-regulated solvents or metals. The waste generated by this process includes typical glovebox waste, such as HEPA filters and glass windows, as well as rags and stainless steel tools, cans, and equipment. Any wastewater generated by this process is sent to the ion exchange processes. Leaded gloves were disposed of as described in Section 3.6.1 until 1992, when this waste began to be segregated and disposed of as RCRA-regulated waste.

3.5.6.17 Cement to Drum (FX)

This process was performed from 1980 to July 1988. During the time that all cement was stirred in a one-gallon can (HP), the cans were initially bagged out a few cans at a time in a polyvinyl chloride (PVC) plastic bag and placed in a drum as they could best be fitted in. Eventually, a drum-out port was dedicated to this purpose. A 26-lb bag attached to a glovebox would be allowed to fit down into a drum. The one-gallon can would be stacked inside the bag in the drum, seven cans to a layer with five layers, for a total of 35 cans contained inside one bagout bag. No processing of materials was performed in this process.

This is a packaging process. RCRA-regulated organics and metals were not used in this process. Any applicable RCRA codes based on the feed materials are assigned to the cement fixation (CF and HP). The waste generated by this process was the usual glovebox waste, including large amounts of plastic. Leaded gloves were disposed of as described in Section 3.6.1.

3.5.6.18 Calcination (HC)

This process was performed from 1979 to August 1989. Plutonium oxalate cakes from P/S code OY were first calcined in air up to 700 degrees C. Water vapor was then passed through the cakes as it was heated to 850–900 degrees C to remove any fluoride impurity from the oxide. This prevented fluoride-catalyzed low temperature sintering in the oxide product.

RCRA-regulated organics and metals are not used in this process and are not introduced with the feed materials. The feed materials (oxalate cakes) are of high purity. Therefore, the waste generated by this process would not contain any RCRA-regulated solvents or metals. This process generates

the usual glovebox waste, plus metal tools, containers, and equipment; ceramic furnace elements; rags; and brushes.

3.5.6.19 High Gradient Magnetic Separation (HGMS)

This process has been performed from May 10, 1994 to the present. This P/S code is very similar to P/S codes GMS, MAG, and MAS. In this process, a steel mesh placed in a magnetic field becomes a magnetic attractor for plutonium particles of less than 50 microns. The particles are removed from slurries of soil and clays in water. This method reduces the quantity of soil that must be treated to remove the plutonium. The soil is first screened to separate the particles that are larger than 53 microns and cannot be separated in this process. The less than 53-micron fraction is slurried in water and passed around the magnet. The lean fraction is discarded as waste in cement fixation (CF) or sent to storage if the plutonium concentration is above the DL. The plutonium-rich fraction is stored until can be taken into a dissolution process. The slurry is filtered and the water is reused.

RCRA-regulated organics and metals are not used in this process but are introduced with the feed materials consisting of ash and miscellaneous materials contaminated with D006, D007, D008, D009, and D011. The waste generated by this process includes the usual glovebox waste plus metal screens and tools, rags, brushes, and containers.

3.5.6.20 Hanford Reservation Materials (HRA)

HRA refers to process residues sent from Hanford Reservation to TA-55 for plutonium recovery (TWCP-5371). This material was sent through nitrate operations but waste from processing it was tracked by the source code (HRA) instead of the P/S code in which the waste was generated. To be conservative, all EPA HWNs that are applicable to P/S codes in nitrate operations (other than the cementation processes CF and HP) are also applied to wastes from HRA. These EPA HWNs are D005, D006, D007, D008, D009, and D011.

NOTE: Because this code is not a process, there is no timeline associated with it in Attachment 3.

3.5.6.21 Impure Americium Holding for Discard (IA)

This P/S code was active from April 1986 to December 1988. When storage of the impure americium hydroxide cakes in P/S code AO became a radiation exposure problem, a significant portion of the stored material was placed in P/S code IA until the material could be fixed in cement for disposal. This P/S code did not involve any type of processing and, therefore, did not generate any waste.

Because this P/S code simply held excess americium hydroxide cakes from P/S code AO, the EPA HWNs applicable to P/S code AO apply to P/S code IA. These EPA HWNs include D006, D007, D008, D009, and D011.

3.5.6.22 Uranium/Plutonium Processing Nitrate Hydrofluoric Dissolution (LC)

This process was active from August 12, 1985 to August 1987. Plutonium oxides from P/S codes US (later renamed US1) and US2 were dissolved in nitric acid and hydrofluoric acid, concentrated by distillation, and filtered. The distillate solution was sent to P/S code EV. Any filter residues were calcined and recycled into the dissolution process. The uranium-plutonium solution was subjected to an oxalate precipitation with oxalic acid or sodium oxalate to precipitate the plutonium. The slurry was filtered and the plutonium oxalate was sent to a calcination process. The uranium nitrate solution was cemented in P/S code HP.

RCRA-regulated organics and metals were not used in this process and were not introduced with the feed materials; therefore there would not be any RCRA-regulated solvents or metals in the waste streams generated by this process. This process generated the usual glovebox waste, plus glassware, heating mantles, plastic filter boats, filter paper, rags, brushes, and metal tools and equipment.

3.5.6.23 Non Combustible Leach (LG1)

This process was active from October 1982 to December 1985. Metal, glass, and plastic from most PF-4 processes were leached with nitric acid to remove plutonium surface contamination from those matrices. The solution mixture was filtered to separate insoluble residues, which were dried and discarded as solid TRU waste. The plutonium nitrate-containing filtrate was sent to P/S code LR for

purification. This filtrate may have contained chromium, cadmium, and/or lead that was leached out from the stainless steel, shielding, or other metal feed materials (TWCP-3568/N-84).

RCRA-regulated organics were not used in this process and were not introduced with the feed materials (TWCP-3568/N-81). Therefore, there would not be any RCRA-regulated solvents in the waste streams generated by this process. The metal feed materials generally consisted of steel, stainless steel, aluminum, and copper. Any RCRA-regulated metals leached from these feed materials would be in the filtrate sent to P/S code LR. However, the leached materials may still contain concentrations of cadmium and/or lead that may leach out above the regulatory limit, resulting in the debris waste requiring the applicable EPA HWNs (D006, D008) (TWCP-3568/N-84). The chromium in stainless steel does not leach out above the regulatory limit. This process generated the usual glovebox waste, plus metal, glass, plastic, plastic filter boats, filter papers, glassware, rags, and brushes (TWCP-3568/N-81).

3.5.6.24 Hydroxide Cake Dissolution (LG2)

This process was active from October 1982 to December 1985. Hydroxide cakes from P/S codes CS and VP3 were dissolved in nitric acid and the solution was filtered. Any residue or filter cake was sent back to the dissolution step. The filtrate containing the plutonium nitrate was sent to P/S code LR for purification.

RCRA-regulated metals and organics were not used in this process; however, during the 1985 time period, certain metals could have been introduced with P/S code CS (from chloride operations), and mercury could have been introduced with the P/S code VP3 feed material. These metals would be found in the nitric acid filtrate, which fed into P/S code LR. Therefore, there would not be any RCRA-regulated solvents in the waste streams generated by this process. However, there may have been cadmium (D006), chromium (D007), mercury (D009), or silver (D011) in the feed material from 1984 through December 1985. This process generated the usual glovebox waste, plus glassware, metal tools and equipment, plastic filter boats, filter papers, rags, and brushes.

3.5.6.25 Nitric Dissolution of Molten Salts (MB)

This process was active from February 1986 to January 1987 and included both a hydrochloric acid dissolution path and a nitric acid dissolution path. The hydrochloric acid path began with refluxing the molten salt extraction (MSE) salts in hydrochloric acid and filtering the material. The solid residues were sent back into the dissolution process. The plutonium solution was sent to P/S code SE for purification. The distillate from the condenser tube was neutralized if it would meet the process caustic waste WAC for the TA-50-1 RLWTF. If it would not meet the WAC, the material was sent to either P/S code CS or CX. In the nitric acid dissolution, the nitric acid refluxed solution was filtered and sent to P/S code PS. The solid residues were recycled back into dissolution. The distillate from the condenser tube was recycled if there was low plutonium content, but was sent to P/S code LR if the plutonium content was high.

RCRA-regulated organics and metals were not used in this process and organics were not introduced with the feed material.

3.5.6.26 Metals Furnace (MF)

This process was active from May 23, 1986 to February 1989. Plutonium metal items were roasted in air at a carefully controlled temperature. After the metal was completely converted to plutonium oxide, the materials were divided into one-kg lots and canned for storage in the vault to await blending.

RCRA-regulated organics and metals were not used in this process and were not introduced with the feed materials. The metal items feed materials were of reasonable purity. Therefore, there would not be any RCRA-regulated solvents or metals in the waste streams generated by this process. This process generated typical glovebox waste, plus metal tools, containers, plastic bags, metal equipment, ceramic boats, rags, and brushes.

3.5.6.27 Non Combustible Leach (NL)

This process was active from 1979 to February 1989 and is very similar to P/S code LG1. Surface contaminated metal, glass, and plastic were subjected to nitric acid leaching and filtration. The filter residues were dried and discarded if they

met the DL. Otherwise, the residues were recycled back into the leaching step. The bulk matrix materials leached were assayed to see if they met the DL for disposal. If not, they were recycled into the leaching step. The filtrate containing the plutonium nitrate was sent to P/S LR for purification. This filtrate may have contained chromium, cadmium, and/or lead from stainless steel, shielding, and other metal feed materials (TWCP-3568/N-84).

RCRA-regulated organics were not used in this process and were not introduced with the feed materials. Therefore, there would not be any RCRA-regulated solvents in the waste streams generated by this process. The metal feed materials may have consisted of steel, stainless steel, aluminum, and copper. Any RCRA-regulated metals leached from these feed materials would be in the filtrate sent to P/S code LR. However, the leached metals may still contain concentrations of cadmium and/or lead above the regulatory limit, resulting in the debris waste requiring the applicable EPA HWNs (D006, D008) (TWCP-3568/N-84). The chromium in stainless steel does not leach out above the regulatory limit. This process generated the usual glovebox waste, plus glassware, metal tools and equipment, plastic filter boats, filter papers, rags, and brushes, as well as the metal, glass, and plastic matrices being leached (TWCP-3568/N-81).

3.5.6.28 Nitrate Recovery (NR)

The processes under P/S codes ED, HCD, MPD, and RFX were combined into this one P/S code; however, this P/S code was never activated. Therefore, waste was never generated under this P/S code.

3.5.6.29 Passivation (PA)

This process was active from 1979 to January 1990. Glovebox sweepings, oxides that may contain unoxidized plutonium metal, carbides, and nitrides that can be very reactive in an oxidizing acid are burned in a tube furnace in air to passivate the material and moderate its reactivity. It can then be sent to a dissolution process such as P/S SP or OD.

RCRA-regulated organics and metals were not used in this process and were not introduced with the feed materials; therefore, there would not be any RCRA-regulated solvents or metals in the waste streams generated by this process. This process generated the typical glovebox waste, plus metal

tools, containers, and equipment; ceramic furnace elements; rags; and brushes.

3.5.6.30 Peroxide Precipitation of MSE Salts (PS)

This P/S code was active from February 1986 to January 1987. Plutonium-containing nitric acid solutions from P/S code MB were filtered, diluted, stirred, and sampled for nuclear material content and to verify that the proper concentrations of materials existed in the solutions. The plutonium in the solution was precipitated out using hydrogen peroxide. The precipitate was filtered to separate it from the solution. The peroxide cake was redissolved in nitric acid and sent to P/S code SO. The americium-rich filtrate was dripped into sodium hydroxide solution to destroy the peroxide. The hydroxide slurry was acidified with nitric acid and an oxalate precipitation performed on the solution. The americium oxalate was separated as a cake by filtration and the cakes were sent to P/S code AO. The filtrate was sent to P/S code LR for recovery of plutonium.

RCRA-regulated organics were not used in this process and were not introduced with the feed materials. RCRA-regulated metals were not used in this process; however, if barium was present in the MSE salt feed material, it would be present in the americium oxalate filtrate that was sent to P/S code LR. According to the SME, however, it is very unlikely that barium was present in the feed material. Therefore, there would not be any RCRA-regulated solvents or metals in the waste streams generated by this process. This process generated the usual glovebox waste materials, plus plastic filter boats, glassware, metal stirrers and column end caps. This waste was disposed as solid TRU waste.

3.5.6.31 Plutonium/Thorium Separation (PT)

This process was active from 1979 to December 1985. Initially, plutonium/thorium oxides were dissolved in nitric and hydrofluoric acid (TWCP-3567/N-54). Sodium chromate and lanthanum nitrate were added to this solution. Thorium was removed from solution through formation of a thorium fluoride precipitate. After filtering out this precipitate, the plutonium and chromium were reduced to the (+3) valence state in solution using hydroxylamine nitrate and then sent to oxalate precipitation to recover the plutonium. Chromium in solution was sent to the evaporator (EV). Because of the

chromium, the waste solution from this activity is assigned the EPA HWN D007.

Later, the process changed to separate plutonium from thorium and americium using technologies similar to those used for ion exchange (TWCP-3567/N-54, N-55). Plutonium/thorium oxide residues were dissolved in nitric acid and passed through a nitrate-based ion exchange column to separate the two actinides. The column effluent containing thorium was subjected to a hydroxide precipitation and filtration. The filtrate was discarded into the process caustic waste line to the TA-50-1 RLWTF. The residue from filtration was calcined and discarded as a solid waste. The plutonium-containing ion exchange eluate was also subjected to a hydroxide precipitation and filtration. Because the plutonium cake is still contaminated with thorium, the slurry was redissolved in nitric acid and passed through a chloride ion exchange column. The thorium effluent underwent a hydroxide precipitation and filtration. The thorium residue is calcined and discarded. The filtrate is discarded into the process caustic waste line to the TA-50-1 RLWTF. The plutonium-bearing hydrochloride eluate undergoes hydroxide precipitation and filtration. The filtrate is discarded into the process caustic waste line to the TA-50-1 RLWTF. The plutonium hydroxide cake is dissolved again in nitric acid and sent to P/S code RR for recovery.

RCRA-regulated organics were not used in this process and were not introduced with the feed materials; therefore there would not be any RCRA-regulated solvents in the waste streams generated by this process. Chromium (D007) could be present due to the use of a chromate salt in the process from 1979 until December 1985. This process generated the typical glovebox waste streams, plus glassware; metal tools, equipment, and containers; plastic filter boats; filter papers; rags; and brushes.

3.5.6.32 RD&D Pretreatment Study (PTS)

This process was active from January 4, 1990 to February 1992. A variety of residue matrices were pulled into P/S code PTS to be characterized for impurities, state of division, and even pretreatment (milling, grinding, etc.) to achieve a desired state for use in fluoride volatility studies in P/S code CK. Most of the effort was expended on ash from LANL and Rocky Flats.

RCRA-regulated organics and metals were not used in this process, but the ash feed would have been high in heavy metals such that this P/S code would generate waste potentially contaminated with non-volatile heavy metals: barium (D005), cadmium (D006), chromium (D007), lead (D008), and silver (D011). Arsenic, mercury and selenium would not be present because they would have been volatilized. This process generated the typical glovebox waste streams, plus metal tools, containers, and equipment; plastic bags; ceramic furnace elements; ceramic boats; rags; and brushes.

3.5.6.33 Rotary Calciner (RC)

This process has been active from 1985 to the present. Ash from P/S codes IS and TDC and other carbon-containing ash and graphite crucibles are calcined in an oxygen or air stream. This removes organic carbon. The calcined ash is blended and sent to recovery. This process is also used to calcine uranium oxides before uranium separation.

RCRA-regulated organics and metals were not used in this process, but the ash feed would have been high in heavy metals such that this P/S code would generate waste potentially contaminated with non-volatile heavy metals: barium (D005), cadmium (D006), chromium (D007), lead (D008), and silver (D011). Arsenic, mercury and selenium would not be present because they would have been volatilized. This process generated the typical glovebox waste streams, plus metal tools, containers, and equipment; plastic bags; ceramic furnace elements; ceramic boats; rags; and brushes.

3.5.6.34 Oil Recovery (RO)

This process was active from 1979 to March 1989. Vacuum pump oils and other contaminated organics from various PF-4 operations were analyzed for nuclear material content. If they met the DL for plutonium, they were mixed with vermiculite and packaged in a drum for disposal. If the oils or organics contained plutonium above the DL, they were filtered through a glass frit so as to meet the DL. Any plutonium residue caught in the filter was to be sent to recovery operations.

Once in 1979, trichloroethylene (D040) was used as a diluent to reduce the viscosity of vacuum pump oil so that the oil

could be filtered through a glass frit. Otherwise, RCRA-regulated chemicals were not used in this code or present in the feed materials. Therefore, other than EPA HWN D040 in 1979, there would not be any RCRA-regulated solvents in the waste generated by this process.

RCRA-regulated metals were not used in this process. However, metal particles from the wear of vacuum pumps, such as lead, cadmium, and steel, could be in the oil; however, the metals are not soluble. The oils contain less than three percent of solids. Lead is the typical heavy metal in vacuum pump oils, while cadmium is found in hydraulic oils. The chromium from the steel is present in the oils in concentrations below the regulatory limit, based on analyses of similar low-level radioactive waste oils. These metal particles remain with the oil when it is absorbed on vermiculite. In the absence of analytical data or other acceptable information confirming that the concentrations of lead and cadmium are below the regulatory levels, the applicable EPA HWNs D006 and D008 are assigned pending additional information (TWCP-3568/N-83).

This process also generated the typical glovebox waste, plus glassware; metal tools, equipment, and containers; plastic bags and tubing; rags; and brushes.

3.5.6.35 Special Scrap Dissolution (SSD)

This process was active from March 10, 1988 to February 1991. Miscellaneous oxide scrap items were combined, dissolved in nitric acid/hydrofluoric acid, and filtered. The filter residues were dried on a hot plate and assayed. If the residues met the DL for plutonium, they were discarded as solid waste. If the plutonium concentration in the residues did not meet the DL, the materials were recycled back into the dissolution/filtering process. The plutonium nitrate-containing filtrate was sent to one of the ion exchange columns for purification.

RCRA-regulated organics were not used in this process and were not introduced with the feed materials; therefore, there would not be any RCRA-regulated solvents in the waste streams generated by this process. RCRA-regulated metals were not used in this process; the presence of heavy metals in the feed materials depends on the source of the feed materials. The feed materials could have contained cadmium, chromium, and/or lead as impurities. These metals would be

contained in the filtrate, which was sent to the ion exchange processes for further purification. The debris waste generated from this process is not expected to contain cadmium, chromium, or lead above the regulatory limits because the dissolution involved strong acids (any soluble metals should be in the filtrate). However, without analytical data or other acceptable information confirming that the concentrations of these hazardous constituents are below the regulatory levels, the applicable EPA HWNs D006, D007, and D008 are assigned pending additional information (TWCP-3568/N-83). This process generated the typical glovebox waste, plus glassware; metal containers, tools, and equipment; plastic filter boats; filter papers; rags; and brushes.

3.5.6.36 Americium Processing Silicon Removal (SX)

This process was active from 1979 through 1984. The americium-containing hydroxide cakes from the peroxide kill process (initially P/S code PR, but later P/S code OH) were redissolved in nitric acid and the solution concentrated through distillation to precipitate a gel of silica. The silica gel was separated by filtration, air dried, and discarded as solid waste at first and later immobilized in cement. The americium-containing filtrate was sent to P/S code AP.

RCRA-regulated organics and metals were not used in this process and were not introduced with the feed materials; therefore, there would not be any RCRA-regulated solvents or metals in the waste streams generated by this process. This process generated the following TRU solid waste: glass vessels, heating mantles, HEPA filters, and other glovebox waste, and rags. Because this process involved predominantly americium-containing feed material, waste materials were always discarded

3.5.6.37 Uranium Separation for Solid Solution Feed (US)

This process was active from January 25, 1984 to January 1986. Calcined solid solutions (consisting of uranium or plutonium oxide from P/S code RC) were dissolved in concentrated nitric acid, followed by oxalate precipitation of plutonium oxalate, and filtration. The uranium-bearing filtrate was partially neutralized, immobilized in cement (HP), and discarded. The plutonium oxalate cake was dried on a hot plate and calcined to the oxide. The oxide was again heated in concentrated nitric acid with the remaining uranium impurity dissolving. The resulting solution went to cement

fixation (HP). The insoluble plutonium oxide was separated by filtration, calcined, and sent to P/S code LC (for dissolution) or RR (for purification).

RCRA-regulated organics and metals were not used in this process and were not introduced with the feed materials, which were of high purity; therefore, there would not be any RCRA-regulated solvents or metals in the waste streams generated by this process. This process generated the usual glovebox waste, plus glassware, metal tools and equipment, plastic filter boats, filter papers, rags, and brushes.

3.5.6.38 Uranium Separation for Non-Solid Solutions (US2)

This process was active from January 25, 1984 to January 1986. The uranium in mixed plutonium-uranium oxide was dissolved in 5 molar nitric acid and filtered. The uranium solution was fixed in cement (HP) and discarded as waste. The solid plutonium oxide separated by filtration was dried on a hot plate and sent to P/S code LC (for dissolution) or RR (for recovery).

RCRA-regulated organics and metals were not used in this process and were not introduced with the feed materials; therefore, there would not be any RCRA-regulated solvents or metals in the waste streams generated by this process. This process generated the usual glovebox waste streams, plus glassware, heating mantles or hot plates, metal tools and equipment, plastic filter boats, filter papers, rags, and brushes.

3.5.6.39 Variable CSMO Scrap Dissolution (VC)

This process was active from April 1986 to December 1989 and is identical to P/S code SSD. Miscellaneous oxide scrap items were combined, dissolved in nitric acid/hydrofluoric acid, and filtered. The filter residues were dried on a hot plate and assayed. If the residues met the DL for plutonium, they were discarded as solid waste. If the plutonium concentration in the residues did not meet the DL, the materials were recycled back into the dissolution/filtering process. The plutonium nitrate-containing filtrate was sent to one of the ion exchange columns for purification. This filtrate may have contained chromium, cadmium, and/or lead from stainless steel, shielding, or other metal scrap items (TWCP-3568/N-84).

RCRA-regulated organics were not used in this process and were not introduced with the feed materials. The oxide feed materials have usually been through a heating process that would volatilize/decompose any organics. Therefore, there would not be any RCRA-regulated solvents in the waste streams generated by this process. The presence of heavy metals in the feed materials depends on the source of the feed materials. Any RCRA-regulated metals leached from these feed materials would be in the filtrate sent to ion exchange. However, the leached residues may still contain concentrations of cadmium and/or lead above the regulatory limit, resulting in the debris waste requiring the applicable EPA HWNs D006 and D008 (TWCP-3568/N-84). Any chromium in scrap metal does not leach out above the regulatory limit. This process generated the typical glovebox waste, plus glassware; metal containers, tools, and equipment; plastic filter boats; filter papers; rags; and brushes (TWCP-3568/N-81).

3.5.6.40 CSMO Scrap Dissolution (VP1)

This process was active from September 26, 1985 to April 1986. Plutonium-aluminum alloy from Hanford was dissolved in nitric acid using mercuric nitrate as a catalyst. If the item was pyrophoric, it was first calcined in P/S code PA. The quantity of mercuric nitrate was quite small because it was present as a catalyst. Filtration separated the solution of plutonium from aluminum metal pieces and a sludgy salt of aluminum nitrate. The metal pieces were picked out of the salt, which was discarded into cement. If the metal was discardable, it went to metallic waste. Plutonium-rich metal went back into dissolution. The plutonium solution was subjected to oxalate precipitation using oxalic acid or sodium oxalate, and filtered to form a cake that would be calcined to the oxide. The oxalate filtrate went to P/S code VP3. This process was modified to perform dissolution of the aluminum in sodium hydroxide after the first month because of the difficulty in controlling the reactivity of this system. The undissolved plutonium oxide could be separated by filtration and sent to one of the dissolution processes.

RCRA-regulated organics were not used in this process and were not introduced with the feed materials. RCRA-regulated metals were not introduced with the feed materials. However, in the first month of operation of this process (September 1985 to October 1985) mercuric nitrate was used in a very

small quantity as a catalyst in the dissolution step. The mercury would be found in the oxalate filtrate and, therefore, also introduced into P/S code VP3 during this time period. EPA HWN D009 (mercury) applies to waste generated under P/S codes VP1 and VP3 during the latter part of 1985. This process generated the usual glovebox waste streams, plus glassware, heating mantles, metal tools and equipment, rags, and brushes.

3.5.6.41 Polycube Processing (VP2)

This process was active from 1979 to April 1986. The skins and fragments of polycubes from P/S code DP were placed in a furnace and the polystyrene was decomposed to form volatile breakdown products in the form of oils, which were sent to Room 425 for absorption on vermiculite (eventually P/S code RO). The dry oxide residue was stored in the vault or sent to the dissolution processes.

RCRA-regulated organics and metals were not used in this process and were not introduced as feed materials; therefore, there would not be any RCRA-regulated solvents or metals in the waste streams generated by this process. This process generated glovebox waste, plus furnaces and furnace elements, metal containers and tools, vacuum pump oil, rags, and brushes.

3.5.6.42 Hydroxide Precipitation (VP3)

This process was active from 1979 to April 1986. In the early years of TA-55, the oxalate filtrates from P/S codes LR, RR, LC, SO, and VP1 were brought to P/S code VP3 to perform a hydroxide precipitation and filtration to separate out the plutonium hydroxide cake. The hydroxide cake went to P/S code LG2 for dissolution. The filtrate was discarded through the process caustic waste line to the TA-50-1 RLWTF. The oxalate filtrates from P/S code LC went to P/S code EV after June 1, 1984.

RCRA-regulated organics were not used in this process and were not introduced with the feed materials; therefore there would not be any RCRA-regulated solvents in the waste streams generated by this process. RCRA-regulated metals were not used in this process; however, mercury (D009) would have entered the process with the feed material from P/S code VP1 (from September 26, 1985 to October 31, 1985). The mercury would have precipitated in the hydroxide

cake. If the hydroxide cake contained plutonium below the DL, the mercury would accompany it to cement fixation (CF); therefore, this waste stream would be RCRA-regulated. If the hydroxide cake could not be discarded, it was sent to dissolution (P/S code LG2). This process generated the usual glovebox waste, plus plastic filter boats, filter papers, glassware, metal tools and equipment, rags, and brushes.

3.5.6.43 Scrap Oxide Dissolution (ZD)

This process was active from September 25, 1984 to November 1988. Scrap oxide from the vault and impure oxide from P/S code CL were dissolved in nitric acid and hydrofluoric acid, and filtered. The residues were collected into 900-gram batches and recycled through the process before being sent to the vault as intractable. The filtrates were sent to P/S code LR or RR ion exchange column for purification of the plutonium.

RCRA-regulated organics were not used in this process and were not introduced with the feed materials; therefore there would not be any RCRA-regulated solvents or metals in the waste streams generated by this process. RCRA-regulated metals were not used in this process; however, heavy metals are possible in the feed materials. These metals would end up in the filtrate that ultimately goes to the evaporator (EV). This process generated the typical glovebox waste streams, plus glassware; metal tools, containers, and equipment; plastic bags and filter boats; filter papers; rags; and brushes.

3.6 Material Inputs to the Waste Generation Process

Attachment 4 lists P/S codes for nitrate operations at TA-55, including process descriptions, feed material, other process inputs, process outputs, and type of waste. The feed materials for nitrate operations consist of the general types of materials listed in Table 1 that are obtained either from the storage vault, as process output from other P/S codes, or from sources outside TA-55, including other DOE sites. Although Pu is usually the radioactive element of interest in the feed materials, in some cases the feed material consisted of other radioactive elements, as indicated by Table 2.

Table 1. Process Feed Materials for Nitrate Operations

Feed Materials	Potential Presence of RCRA-Regulated Substances*	P/S Codes in Nitrate Operations
Analytical laboratory solutions	Potentially contaminated with RCRA-regulated constituents • All analytical laboratory solutions are potentially contaminated with chromium (D007), lead (D008), and mercury (D009) • CLS-1 solutions potentially contaminated with mercury (D009) and lead (D008), as well as RCRA-listed organic substances used as solvents, including acetone (F003), butyl alcohol (F003), carbon tetrachloride (D019), chlorobenzene (F002, D021), chloroform (D022), methanol (F003), methylene chloride (F002), tetrachloroethylene (F002, D039), xylene (F003) (Cl-25/TWCP-3547).	CF, HP (if solutions contained Pu >DL)
Anode heels	Typically contaminated with RCRA-regulated heavy metals Cd, Cr, Pb and Ag (D006, D007, D008, D011). Heavy metals As, Hg, and Se are not present because they are volatilized from the Pu oxide feed at the high temperatures to which this material is subjected in P/S codes ER, RM, and SS (electrorefining step).	AS, BU, NC
Ash from P/S codes ETD and TDC; or from other DOE sites such as Hanford	Usually suspect contaminated with Ba, Cd, Cr, Pb, and Ag (D005, D006, D007, D008, D011). As, Hg, and Se may also be present although these metals are volatilized at high temperatures if present in the oxide and chloride forms.	AL, AT, ATL, ED, HGMS, HRA, IS, MPD, PTS, RC, SC
Crucible pieces (tantalum, magnesium oxide)	Typically fairly pure, no RCRA substances present	MAS, SC
Disassembled weapons components	High-purity Pu and U material types, no RCRA substances present	BM, RB, RBJ
Experimental R&D feed materials; various isotopes and isotopic mixtures of actinides in various matrices	Variable purity; may or may not contain RCRA substances	MAS
Hydroxide cakes	Typically contaminated with RCRA-regulated heavy metals Cd, Pb, Hg, Ag and possibly Cr (D006, D008, D009, D011, and D007)	CD, HCD, HD, LG2

Feed Materials	Potential Presence of RCRA-Regulated Substances*	P/S Codes in Nitrate Operations
Miscellaneous materials contaminated with Pu (e.g. tools, metal, glass, plastic, labware, scrap, rags, glovebox sweepings, pump oils, HEPA filters, Hanford [Hanford materials])	Typically contaminated with RCRA-regulated heavy metals Cd, Pb, Hg, Ag and possibly Cr (D006, D008, D009, D011, and D007)	ATL, BAC, CPOD, ED, ETD, GMS, HGMS, HRA, IS (combustible material), LG1 (non-combustible material), MAG, MAS, MELL (cellulosic material), ML (metal equipment), NC (non-combustible material), NL (non-combustible material), PA (glovebox sweepings), PAF, RO (organics), SC, SP, TDC (cellulosic material), VC, ZD
MSE salts	Typically fairly pure, suspect contaminated with barium (D005)	MB, PS
Pu metal or metal alloy, Hanford (Hanford materials)	High purity, no RCRA-regulated substances, unless noted otherwise	ATL, BM, BU, MF, PAF, VP1
Pu oxalates	High purity, no RCRA-regulated substances, unless noted otherwise	CC, DF, HC
Pu oxides, Hanford (Hanford materials)	Variable purity from P/S codes RB, RBJ and others, and from the vault; suspect contaminated with RCRA-regulated heavy metals Cd, Cr and Pb (D006, D007, D008) High purity oxides and material from Hanford from P/S codes CA and MA, and from the vault; no RCRA substances	ATL, BL, CH, CPOD, DP, ED, FC, HRA, LC, MPD, OD, PT, RB, RBJ, SP, SSD, UPS, US, US2
Pyrochemical salts	Typically fairly pure, no RCRA substances other than Ba are present	COD, COL, MB

* The information in this column is highly generalized. Applicability of specific EPA HWNs to a process as a result of the feed material must be determined on a case-by-case basis because the presence and fate of contaminants is time and function dependent.

Table 2. P/S Codes with Radionuclides Other Than Pu in Feed Materials

P/S code in nitrate operations	Radionuclide in feed material
AO, AP, FA, PR	Am-241
ATL	Np-237
CF	Am-341, U, Th-232
HP, IA, OH, SX	Am-241
LC, RC, UPS, US	U
PT	Th-232

The remainder of this section summarizes the nature of the process waste in terms of its physical, chemical and radioisotopic characteristics.

3.6.1 Physical Form Identification

Solid waste from nitrate operations primarily consists of metal and debris waste, as well as cemented waste discarded under P/S codes CF or HP. Debris waste contains glassware, plastics, ceramic materials, paper, rags, HEPA filters, metal containers, brushes, and small tools. Lead-containing debris items are segregated and packaged separately (TWCP-3567/N-39). Prior to 1987, leaded gloves were discarded in the combustible and non-combustible debris waste streams. Between 1987 and May 1992, leaded gloves were segregated from combustible debris and discarded in the metal debris waste stream because of concern that explosive lead oxides might form if the combustible debris waste were incinerated. Since May 1992, leaded gloves have been routinely segregated from other metal debris waste and assigned to a separate leaded-glove waste stream.

Because items from several different processes are usually combined into individual waste drums, the physical waste form of each drum must be determined independently. This information is documented on a Waste Origination and Disposition Form (WODF) by the waste generator according to controlled procedures. The P/S code for each waste item is also documented on this form. In the packaging process, a standard form, the Discardable Waste Log Sheet (DWLS), is used to list each item number and record its matrix material. This form is signed by the waste packager, and then reviewed and approved by quality assurance (QA) personnel. Example forms for one drum of waste generated can be viewed in record TWCP-2513.

3.6.2 Radionuclide Content Identification

The primary plutonium material type inputs for nitrate operations at TA-55 are listed in Table 3. The designation *material type* (MT) (e.g., MT 52) is used within the DOE Complex to describe the isotopic composition of common blends of radioactive materials used within the Complex. The material type notation was developed because it is a convenient way to describe material types that have very consistent isotopic compositions. Please note that Table 3 indicates the isotopic composition of the material types at the time the waste was characterized.

The MT provides the basis for estimating an upper bound for U-234, U-235, and Am-241 contents based on the rate of decay of their precursors, Pu-238, Pu-239 and Pu-241, respectively. These bounding calculations provide a basis for identifying enrichment or depletion of one

radionuclide versus another based on radioassays of individual waste containers. The results of these calculations are also tabulated in Table 3. The calculations assume that (a) none of these isotopes were initially present in the material, (b) the oldest Pu material in inventory dates back to 1 January 1960, and (c) the waste was packaged on 1 January 1996, making it 36 years old at that time (TWCP-698).

The material type used in the process generating each waste item was documented on the WODF and DWLS. However, some of the plutonium recovery processes separate plutonium and americium, or plutonium and uranium, so that their relative ratios may be altered in the process outputs and wastes. Waste items may be either depleted or enriched in Am-241 or U-234 depending on whether the source of contamination is the process product or the process residues (TWCP-882). Table 4 indicates some P/S codes in which enrichment of radioelements other than Pu are expected to be greater than usual.

Residues submitted for reprocessing often contain Np-237, the decay product of Am-241 (half-life, 458 yr). This radioisotope is expected to be present in minor amounts in nearly all debris waste from nitrate operations at TA-55, with exceptions as noted in Tables 2 and 4. In addition, Pa-231 and Cs-137 may be present in trace amounts due to their widespread presence as contaminants in TA-55 operations (TWCP-5164, TWCP-5165).

In general, uranium and its isotopes are expected to be present only at trace levels, if at all. U-238 would only be present if uranium was the feed material (e.g., as has been the case for P/S codes LC, RC, UPS, US, and sometimes CF; Table 2). U-235 in growth from the decay of Pu-239 half-life, 24,120 years) would be negligible due to the long half-life of Pu-239. Uranium-234 would be present in MT 83 as a decay product of Pu-238 (half-life, 87.74 years). After 20 years, 14.6 percent of the initial Pu-238 would have decayed to U-234. For MT 83 with an initial content of 83.89 percent Pu-238, the atomic ratio U-234 to total Pu would be about 0.14. No U-236 is present.

During TWCP characterization, the contents of each waste package undergo non-destructive analysis to provide detailed radioisotopic data. These data are used to evaluate the accuracy of AK information in accordance with *Waste Characterization Data Reconciliation with Acceptable Knowledge* (TWCP-DTP-1.2-064). This AK report will be updated to incorporate the results of these comparisons.

3.6.3 Chemical Content Identification

Chemical inputs to nitrate operation processes are listed in Table 5. The use of strong acids, bases, or oxidizers does not result in RCRA listings

Table 3. Average Isotopic Content of Plutonium Material Types and Enrichments

Material Type (MT)	Plutonium Isotope (Wt.%) and Half-Life						Upper Bounds for Dimensionless Weight Ratios[a]		
	Pu-238 (87.74 yr)	Pu-239 (24120 yr)	Pu-240 (6564 yr)	Pu-241 (14.35 yr)	Pu-242 (376,300 yr)	Pu-244 (8.26 x 10^7 yr)	U-234/ Total Pu	U-235/ Total Pu	Am-241/ Total Pu
MT 51	0.006	96.77	3.13	0.076	0.018	—	1×10^{-5}	0.001	0.0006
MT 52	0.01	93.78	6	0.2	0.02	—	2×10^{-5}	0.001	0.002
MT 53	0.03	91.08	8.45	0.366	0.071	—	7×10^{-5}	0.0009	0.003
MT 54	0.046	87.42	11.5	0.81	0.22	—	0.0001	0.0009	0.007
MT 55	0.06	83.88	14.73	1.03	0.304	—	0.0002	0.0009	0.009
MT 56	0.061	81.9	16.51	1.18	0.355	—	0.0002	0.0009	0.01
MT 57	0.433	74.63	20.7	2.55	1.69	—	0.001	0.0008	0.02
MT 42									
84%	1.02	1.37	10.32	3.13	84.14	0.02	0.003	1×10^{-5}	0.03
90%	0.72	1.26	6.4	1.86	89.77	—	0.002	1×10^{-5}	0.02
95%	0.45	0.56	2.47	0.906	95.58	0.029	0.001	6×10^{-6}	0.008
MT 83									
83%	83.89	13.8	1.9	0.32	0.09	—	0.26	0.0002	0.003
89%	89.26	10.07	0.633	0.021	0.015	—	0.28	0.0001	0.0002

[a] These ratios are calculated under the assumption that no chemical fractionation occurs and, hence, are intended to be used to identify fractionation when it is present by comparing these upper bounds to radioassay data.
Source: TWCP-698

Table 4. Secondary Radionuclides in Process Wastes

P/S code	Secondary radionuclide in process waste
AO	Am-241 (1979—1984, Am-241 production) Am-241 (1985—1987, impure AmO_2 for disposal)
AP	Am-241 (1979—1984, Am-241 production)
ATL	Np-237 (1993—1994, NDA standards material)
CD, HCD, HD	Am-241 (1992—present)
CF, ED, EV, RB, RFX	Np-237 as decay product in MSE (1992—present)
EV	Am-241 (1979—1984, Am-241 production) Am-241 (1992—present)
FA	Am-241 (1979—1984, Am-241 production)
HP	Am-241 (1979—1984, Am-241 production) Am-241 (1985—1987, impure AmO_2 for disposal) Am-241 (1992—present)
IS	Cm-244 (March 1987—April 1987)
LR, PR	Am-241 (1979—1984, Am-241 production)
PS	Am-241 (1985—1987, impure AmO_2 for disposal)
PT	Th-232 (1980—1985)

Source: TWCP-882

Table 5. Chemical Inputs to Processes Described in This Report

Chemical Input	P/S Codes in Which RCRA-Listed Chemicals Are Used	Comments on Applicability of RCRA HWNs (if any)
Gases		
Argon gas Nitrogen gas		
Acids		
Ascorbic acid Formic acid Hydrochloric acid Hydrofluoric acid Nitric acid Oxalic acid Sulfuric acid		D002 does not apply to the TRU solid waste because there are no free liquids in this waste
Bases		
Potassium hydroxide Sodium hydroxide		D002 does not apply to the TRU solid waste because there are no free liquids in this waste
Inorganic Chemicals		
Aluminum nitrate		
Calcium fluoride		
Calcium nitrate		
Cerium nitrate		
Cobalt nitrate		
Ferric ammonium sulfate hydrate		
Ferric nitrate		
Ferrous ammonium sulfate		D003 does not apply to the TRU solid waste because there are no free liquids in this waste.
Ferrous sulfamate		
Gypsum cement		
Hydrogen peroxide		
Hydroxylamine nitrate		
Lanthanum nitrate		
Magnesium oxide		
Mercuric nitrate	VP1	D009. Used as catalyst in P/S code VP1; hydroxide cake produced in VP1 is processed in P/S code VP3
Portland cement		
Potassium fluoride hydrate		
Potassium thiocyanate		
Silver nitrate	AT, CPOD	D011, used as catalyst from 1990 to 1994 in CPOD. D011 does not apply to P/S code AT because it was used in a cold lab and did not become part of any TRU waste.
Sodium chloride		
Sodium chromate	PT	D007, used in separation of Th from Pu/Am
Sodium nitrite		
Sodium oxalate		
Metals		
Platinum		
Stainless steel		
Titanium		

Chemical Input	P/S Codes in Which RCRA-Listed Chemicals Are Used	Comments on Applicability of RCRA HWNs (if any)
Organic Chemicals		
Acetone	OH, OY	F003 if used as a solvent
Diethyl oxalate		
Ethanol		
Formamide		
Ion exchange resin		
Oil (engine)		
Organic liquid emulsifier		
Phenolphthalein		
Phosphate buffer solution		
Phthalate buffer solution		
Polyoxyethylene-20-Sorbitan laurate (surfactant)		
Silicon adhesive		
Silicon defoamer (General Electric AF9020, Silicon Antifoam Emulsion)		
Sodium citrate retarder		
Trichloroethylene	RO	D040 applies to P/S code RO; used once in 1979 as diluent for oils
Urea		
Vacuum grease		

for solid debris waste from these processes because of the absence of free liquids in this waste.

4.0 ASSIGNMENT OF EPA HAZARDOUS WASTE NUMBERS

The assignment of EPA HWNs to process wastes from nitrate operations is summarized below, as well as on the process timelines in Attachment 3, and the table of process inputs and outputs in Attachment 4. These assignments are based on the possible presence of RCRA chemicals in process waste as a result of their suspected or known presence in feed materials, chemical inputs, equipment, and glovebox surfaces.

4.1 F, K, and P Listings

F002 and F003 apply to waste discarded under P/S codes CF and HP. Some of the solutions sent to these P/S codes for immobilization in cement contain the following organic chemicals:

- F002: methylene chloride
- F003: acetone, butyl alcohol (n-butanol), methanol, tetrachloroethylene, and xylene.

No K or P listings apply to solid wastes generated from any of the P/S codes in this report because no K-listed or P-listed chemicals were present in the feed materials, chemicals or equipment used in these processes.

4.2 Toxicity Listings

D008 (lead) applies to all P/S codes due to the potential to generate leaded gloves. Prior to 1987, leaded gloves were not segregated from combustible debris. Between 1987 and May 1992, leaded gloves were segregated and discarded in the metal debris waste stream. Since May 1992, leaded gloves have been routinely segregated and assigned to a leaded-glove waste stream, still under the originating P/S code (TWCP-4166). Lead-containing debris waste is segregated and packaged separately from other debris waste (TWCP-3567/N-39); these wastes also are assigned D008.

Waste from most P/S codes in nitrate operations carry several EPA HWNs due to the presence of metals with toxicity characteristics in the feed materials. P/S codes covered by this report carry the following codes for heavy metals:

AL	D005, D006, D007, D008, D009, D011
AO	D006, D007, D008, D009, D011
AP	D007, D009
AS	D006, D007, D008, D011
AT	D005, D006, D007, D008, D011

ATL	D005, D006, D007, D008, D009, D011
BF	D006, D007, D008, D011
BU	D006, D007, D008, D011
CD	D005, D006, D007, D008, D009, D011
CF	D007, D008, D009, D011, D019, D021, D022, D039
COL	D005
CPOD	D011
DS	D005, D006, D007, D008, D009, D011
ED	D005, D006, D007, D008, D009, D011
ETD	D005, D006, D007, D008, D011
EV	D006, D007, D008, D009, D011
FX	D006, D007, D008, D009, D011
HCD	D005, D006, D007, D008, D009, D011
HD	D005, D006, D007, D008, D009, D011
HGMS	D006, D007, D008, D009, D011
HP	D007, D008, D009, D011, D019, D021, D022, D039
HRA	D005, D006, D007, D008, D009, D011
IA	D006, D007, D008, D009, D011
IS	D005, D006, D007, D008, D011
LG1	D006, D008
LG2	D006, D007, D008, D009, D011
LR	D005, D006, D007, D008, D009, D011
MB	D007, D008, and D009 (in accordance with discussion in TWCP-AK-2.1-002,R.2, section 3.6.2)
MELL	D006, D007, D008, D009, D011
ML	D006, D008
MPD	D005, D006, D007, D008, D009, D011
NC	D006, D008
NL	D006, D008
OD	D006, D007, D008
OH	D006, D007, D008, D009, D011
PT	D007
PTS	D005, D006, D007, D008, D011
RC	D005, D006, D007, D008, D011
RCM	D005, D006, D007, D008, D009, D011
RFX	D005, D006, D007, D008, D009, D011
RO	D006, D008, D040
RR	D006, D007, D008, D009, D011
SC	D005, D006, D007, D008, D009, D011
SP	D006, D007, D008

SSD	D006, D007, D008
TDC	D005, D006, D007, D008, D011
VC	D006, D008
VP1	D009
VP3	D009
VUL	D005, D008

D001 (ignitable), D002 (corrosive) or D003 (reactive) do not apply to the solid wastes from nitrate operations because no ignitable chemicals were used in these processes and because the solid wastes do not contain any free liquids (see Section 5.0).

5.0 VERIFICATION THAT IGNITABLE, REACTIVE, AND CORROSIVE WASTES WERE EXCLUDED

According to the WIPP WAP, "The prohibition of liquids and containerized gases prevents the shipment of corrosive, ignitable, or reactive wastes." Administrative controls on waste packaging were in place at various times to ensure the absence of such items from the waste stream.

- Liquids were prohibited from solid waste streams at TA-55 when the facility opened in January 1978. A waste management procedure written to cover operations at the new facility, *TA-55 Standard Operating Procedure (SOP) 406-GEN-R00*, stated that "Liquids are not permitted in any container of solid waste materials" (TWCP-3943).

- Chemical Waste Disposal Requests introduced in June 1980 included checkboxes that the waste generator was required to check if the waste contained corrosive acids or bases, or pyrophoric, flammable, corrosive, explosive, toxic, carcinogenic or highly reactive materials.

- The Certification Plan (TWCP-697) and related Generator Attachments (TWCP-701) were implemented in 1987. Waste generators were required to sign a statement on the WODF documenting that the waste contained "no free liquids, pyrophorics, explosives, compressed gases, powders or materials other than the indicated matrix." Checkboxes were also present for indicating the presence or absence of corrosive chemicals. Full implementation of this generator statement occurred in May 1987.

- Waste management inspectors perform visual verification of the waste prior to its initial packaging, thus allowing the inspectors to verify the generator's WODF statement (TWCP-701, Sections 3.8.5 to 3.8.6).

- In addition to the above-mentioned prohibitions on explosives in wastes, explosives were prohibited from TA-55 until installation of the Impact Test Facility in the early 1990s. Explosives continue to be banned in the solid waste streams up to the present time. If a misfire should occur, the requirement is to destroy the unspent powder by burning (TWCP-4720).

- The Waste Profile Request Form (WPRF), in use since 1991, includes a statement that must be authenticated by the waste generator, that the waste is not ignitable (flash point >200°F), reactive, or corrosive.

- The TA-55 Generator Attachments to the Certification Plan were updated in 1995 (TWCP-700) re-emphasizing the prohibition on liquids in the waste, and the continuation of waste management inspection.

Hence, since the inception of operations at TA-55, corrosive and reactive wastes have been excluded from TA-55 solid wastes through the prohibition of liquids.

The absence of these prohibited items is verified through radiography of each waste container and visual examination of selected containers during TWCP characterization activities. These data are used to assess the accuracy of AK information in accordance with *Reconciliation of Visual Examination and Radiography Information* (TWCP-QP-1.1-028). Any free liquids are remediated, or the container is tagged as non-compliant by filing a Prohibited Waste Report in accordance with *Nonconformance Reporting and Tracking* (TWCP-QP-1.1-007).

6.0 VERIFICATION THAT INCOMPATIBLE CHEMICALS WERE PROHIBITED

Section 5.0 summarizes administrative controls in place at TA-55 that prohibit incompatible chemicals in the waste, and measures taken to verify their absence. In addition, all waste containers shipped from TA-55 to TA-54 for storage are evaluated for potentially incompatible chemicals in accordance with 49 CFR Subpart C—Segregation and separation chart of hazardous materials; Section 177.848, Segregation of hazardous materials, and were determined to be in compliance with this requirement.

7.0 VERIFICATION THAT THERE ARE NO COMPRESSED GASES, FREE LIQUIDS, NONRADIONUCLIDE PYROPHORICS, SEALED CONTAINERS GREATER THAN FOUR LITERS IN VOLUME, OR >1% RADIONUCLIDE PYROPHORICS

Most gases used at the TA-55 Plutonium Facility are stored outside the building and the gas is plumbed into the glovebox from outside (TWCP-4164). Occasionally, a lecture bottle may have been used for a process inside the building, but these bottles were kept outside of the glovebox with the gas plumbed into the glovebox. Consequently, compressed gas cylinders or containers are not expected to be in any of the TRU wastes generated by TA-55 operations.

Spray cans, especially WD-40, were in common use in TA-55 gloveboxes until May 1992 (TWCP-4166) and were routinely discarded as metal debris waste. From 1988 until May 1992, the protocol was to vent or puncture the spray cans inside the glovebox; and venting was confirmed by inserting a metal wire into the valve. After May 1992, spray cans were no longer used in gloveboxes.

For items of pyrochemical salt waste, the procedures of oxygen sparging and/or carbonate oxidation have been used since May 1987 to ensure that pyrophorics were oxidized. In addition, screening tests on similar pyrochemical salts and residues (which contain higher amounts of plutonium) at the Rocky Flats Environmental Technology Site (TWCP-2501) have shown (1) no autoignition, (2) no spontaneous combustion, (3) and no sparking. Experimental results on the reactivity of LANL direct oxide reduction (DOR) salt with water and the reactivity in air of heated calcium metal nodules from DOR salts indicate the absence of "dangerous when wet materials" and pyrophoricity in these salts (TWCP-3730, TWCP-3731, TWCP-3732).

Verification that individual waste drums do not contain compressed gases, free liquids, or sealed containers greater than 4 L in volume is obtained from radiography of each waste containers and visual examination of selected containers during TWCP characterization activities. Any free liquids are remediated, and any sealed containers greater than 4 L in volume, or unpunctured or unvented gas containers, are removed, or the waste container is tagged as non-compliant by filing a Prohibited Waste Report in accordance with *Nonconformance Reporting and Tracking* (TWCP-QP-1.1-007). For administrative controls on the prohibition of pyrophorics, see Sections 5.0 and 6.0.

8.0 VERIFICATION THAT THERE ARE NO POLYCHLORINATED BIPHENYLS (PCBs) IN THE WASTE STREAM

No PCBs were introduced into the nitrate operations, based on documentation in TA-55 procedures reviewed during the AK investigation and summarized in the process inputs listed in Table 1, Table 5, and Attachment 4. In the cement fixation process (P/S codes CF and HP), oils are sometimes added to drums of cemented waste. There is no indication these oils contain PCBs, and they are added to the 55-gallon drums of cement in small quantities (maximum of 6 liters [TWCP-3568/N-74]). The oils are primarily vacuum pump oils, along with some oils used in heat-treating (cooking or silicone oils) or in grinding (TWCP-3568/N-82). None of these oils are known to contain PCBs. All transformers known to contain PCBs have been tracked from initiation of operations of TA-55 in 1978. When any transformer oil is drained, the oil is handled by a subcontractor who is wholly responsible for its disposal; this oil does not enter the LANL disposal operations.

9.0 CITED PROCEDURES AND REQUIREMENTS DOCUMENTS

- 40 CFR Part 261, Subpart C—Characteristics of hazardous waste, Sections 261.21 (*Characteristic of ignitability*), 261.22 (*Characteristic of corrosivity*), 261.23 (*Characteristic of reactivity*), and 261.24 (*Toxicity characteristic*)

- 40 CFR Part 261—Identification and Listing of Hazardous Wastes

- 40 CFR Part 261, Subpart D—Lists of hazardous waste, Sections 261.31 *(Hazardous wastes from non-specific sources),* 261.32 *(Hazardous wastes from specific sources),*

and 261.33 *(Discarded commercial chemical products, off-specification species, container residues, and spill residues thereof)*

- 49 CFR Subpart C—Segregation and separation chart of hazardous materials. Section 177.848, *Segregation of hazardous materials*
- *Acceptable Knowledge Documentation* (TWCP-QP-1.1-021)
- *Nonconformance Reporting and Tracking* (TWCP-QP-1.1-007)
- *Records Management* (TWCP-QP-1.1-004)
- *Reconciliation of Visual Examination and Radiography Information* (TWCP-QP-1.1-028)
- *Waste Acceptance Criteria for the Waste Isolation Pilot Plant* (DOE/WIPP-069) (WIPP WAC)
- *Waste Analysis at Facilities that Generate, Treat, Store and Dispose of Hazardous Waste* (EPA/OSWER 9938.4-03)
- Waste Analysis Plan, Attachment B to the *Hazardous Waste Facility Permit Issued to the Waste Isolation Pilot Plant* (EPA No. NM4890139088)
- *Waste Characterization Data Reconciliation with Acceptable Knowledge* (TWCP-DTP-1.2-064)

ACCEPTABLE KNOWLEDGE ROADMAP

Waste from P/S Codes AL, AO, AP, AS, AT, ATL, BAC, BF, BL, BM, BU, CC, CD, CF, CH, COD, COL, CPOD, CR, DF, DP, DS, ED, ETD, EV, FA, FC, FX, GMS, HC, HCD, HD, HGMS, HP, HRA, IA, IS, LC, LG1, LG2, LR, MAG, MAS, MB, MELL, MF, ML, MPD, NC, NL, NR, OD, OH, OY, PA, PAF, PR, PS, PT, PTS, RB, RBJ, RC, RCM, RFX, RO, RR, SC, SP, SSD, SX, TDC, UPS, US, US2, VC, VP1, VP2, VP3, VUL, ZD

Copies of these documents are in the TWCP RMDC Center. Refer to *Records Management* (TWCP-QP-1.1-004) for information on obtaining copies of these documents

TWCP Record No.	Information Category Code*	Information	Source	Summary	Limitations
TWCP-352	B	Description of plutonium recovery processes	Wastes from Plutonium Conversion and Scrap Recovery Operations, LA-11069, March 1988	Document describes the Pu residues and the various treatment approaches used in recovering plutonium from scrap	Document does not give information about RCRA constituents introduced or present in the processes
TWCP-614	D	All TA-55 waste is Defense related.	Memo from Doug Sankey.	All TA-55 waste is Defense related.	Budget information may not be acceptable.
TWCP-697	C	Waste was controlled to meet WIPP WAC requirements as early as 1983.	*Los Alamos TRU Waste Certification Plan for Newly Generated TRU Waste,* WCP-HSE7-CPL-01, R.2 (November 1984)	Waste was controlled to meet WIPP WAC requirements as early as 1983. Generator Attachments were used to describe and reference specific generator procedures.	Overview document - Generator Attachments provide more detailed information.
TWCP-698	B	Gives Material Type compositions	NMT Memo, NMT-7 WM/EC-96-032 Benchmark Environmental Corp. Memo, AL-7193 BEC	Gives Material Type compositions	Does not give information on how material may fractionate in TA-55 waste processes.
TWCP-700	C	*Attachment 3 to the Los Alamos TRU Waste Certification Plan for Newly Generated TRU Waste,* R05	*NMT-7 Attachment, January 1995,* TRUWM-TA55-CPA-03,R00	Documents controls to meet WIPP WAC were implemented and how independent verification was accomplished.	Information is not extremely detailed.

* Information Category Codes: A = forms intended for use in waste certification, B = data from controlled databases and published documents, C = unpublished data, and D = interviews, memos, and letters

TWCP Record No.	Information Category Code*	Information	Source	Summary	Limitations
TWCP-701	C	*TA-55 Generator Attachment* to the *TRU Waste Certification Plan for Newly Generated TRU Waste*	*TA-55 Attachment, 1987,* TRU-MST12-CPA-03,R00	Documents controls to meet WIPP WAC were implemented and how independent verification was accomplished.	Information is not extremely detailed.
TWCP-816	D	Jim Foxx Interview on Number of Layers of Packaging	C.L. Foxx, Los Alamos National Laboratory	Waste was co-mingled with room trash, and was initially boxed as low-level waste. Subsequently, some of these waste boxes were returned for disposal in drums as TRU waste when on-site radioassay results showed them exceeding the low-level DLs.	None
TWCP-882 (UCNI)	D	Secondary Radionuclides and Toxic Metals in TA-55 TRU Waste	Memo from Jim Foxx	Lists additional radionuclides and metals potentially in waste, subdivided by process status code. Covers time period from 1978 to present.	Best information available, but it is based on worker recollection because other records are not available.
TWCP-886	C	Color Flow Diagram of Pu-processes at TA-55.	Diagram from Jim Fixx	Indicates that process inputs are thermally treated and that heavy metals from process inputs end up in the nitric acid evaporator bottoms.	Does not indicate solvent input to processes.
TWCP-887	D	Co-mingling of Defense and Non-Defense TRU Waste	Memo from Jim Foxx	Wastes generated from defense and non-defense activities were not segregated at TA-55 through 1997	None
TWCP-2501	B	"Backlog Waste Reassessment Baseline Book, Waste Form 34"	Rocky Flats Environmental Technology Site Report 1995	Page WF34-10 contains results of tests for corrosivity	Tests were conducted on residues rather than on waste.

* Information Category Codes: A = forms intended for use in waste certification, B = data from controlled databases and published documents, C = unpublished data, and D = interviews, memos, and letters

TWCP Record No.	Information Category Code*	Information	Source	Summary	Limitations
TWCP-2513	A	Example of Generator Reports for Drum 54856	TA-55 Records Management Center	Example of generator records including WPRF #07045 and WODF form showing the waste generator certification statement.	Older forms are often hard to read.
Cl-25/ TWCP-3547 (UCNI)	D	Answers to questions about chloride processes	Interview with Jim Foxx, 9/23/99	Answers to questions on Chloride processes; CLS-1 solvent list	None
TWCP-3548/ N-1 (UCNI)	B	General description of the overall Nitrate recovery process.	*TA-55 Final Safety Analysis Report* (07/13/95)	Each step of the nitrate recovery process is described. This includes pretreatment, dissolution, purification, oxidation, and evaporation.	It provides mostly a current (as of 1995) description of the process. It alludes to past practices in places.
Nitrate Pretreatment Procedures					
TWCP-3548/ N-2 (UCNI)	C	P/S diagram; process diagram; process description (P/S GMS, MAG, MAS)	Magnetic Separation Research and Development; Magnetic Separation, 460-REC-R00 through R01, 1/30/89 through 11/2/92	Describes magnetic separation processes for lean and rich residues. Lean residues <EDL are sent to cement fixation.	None
TWCP-3548/ N-3 (UCNI)	C	Process description	Standard Operating Procedure for Handling Process Generated Residues at TA-55, 503-GEN-R00, 2/28/78	Procedure for residue handling, including liquid residues sent to recovery, not specified if nitrate or chloride processing.	None
TWCP-3548/ N-4 (UCNI)	C	Process description	Standard Operating Procedure for the Packaging of Rags for Recovery, 504-GEN-R00, 2/25/78	Describes rinsing of nitrated rags in water. Water sent to ion exchange.	None
TWCP-3548/ N-5 (UCNI)	C	Chemical list; process description (P/S IS based on description)	Incinerator, 422-REC-R00 through R04, 3/1/78 through 1/15/87	Describes incinerator process and disposition of ash.	P/S code IS assigned based on title and description

* Information Category Codes: A = forms intended for use in waste certification, B = data from controlled databases and published documents, C = unpublished data, and D = interviews, memos, and letters

TWCP Record No.	Information Category Code*	Information	Source	Summary	Limitations
TWCP-3548/ N-6 (UCNI)	C	P/S Diagram; process description (P/S TDC)	Thermal Decomposition of Cellulose Items, 402-REC-R00, no date	Describes thermal decomposition of rags in an inert atmosphere and also how nitrated rags were soaked in water and the water sent to ion exchange.	No date is available for this procedure.
TWCP-3548/ N-7 (UCNI)	C	Process diagram; chemical list; process description (P/S PAF)	Oxidation of Pu Metal and Alloys Prior to Dissolution; Oxidation of Pu Metal and Alloys; Passivation Furnaces, 429-REC-R00 through R05, 3/1/78 through 12/12/95	Describes passivation furnace process.	None
TWCP-3548/ N-8 (UCNI)	C	Process description	Procedure for Burning of (Pu, U) Carbides; Burning Plutonium and/or Uranium Carbides and Nitrides, 428-REC-R00 through R02, 3/1/78 through 12/8/86	Pu and U nitrides or carbides are burned to remove pyrophorics.	None
TWCP-3548/ N-9 (UCNI)	C	P/S diagram, chemical list, process description (P/S VUL)	Vessel Handling and Unloading, 494-REC-R00, R01, R02, and R04, 11/15/91 through 3/12/93		R04 is marked as "Draft" with no approval signatures or date.
TWCP-3548/ N-10 (UCNI)	C	Chemical list; process description	Procedure for Disposal of Oils Containing Recoverable Amounts of Pu in the Form of (U, Pu) Carbides, 431-REC-R00, 1/26/78; 431-REC-R01, no date	Oils are filtered for Pu recovery. Oils <EDL are absorbed on vermiculite for disposal. Filtered solids are sent to dissolution.	None
TWCP-3548/ N-11 (UCNI)	C	Process description	Passivation, 431-REC-R00, 12/19/86	Passivation of Pu bearing materials to remove pyrophorics (Ca, Mg metal).	None

* Information Category Codes: A = forms intended for use in waste certification, B = data from controlled databases and published documents, C = unpublished data, and D = interviews, memos, and letters

TWCP Record No.	Information Category Code*	Information	Source	Summary	Limitations
TWCP-3548/ N-12 (UCNI)	C	P/S Diagram; chemical list; process description (P/S TDC)	Thermal Decomposition of Cellulose Items, 498-REC-R00 and R02, 6/2/95 and 8/15/97	Thermal decomposition of rags in inert atmosphere. Off gases removed with caustic scrubber. Caustic is filtered and sent to RLWTF if <EDL.	None
TWCP-3548/ N-13 (UCNI)	C	Process description	Anode Heel Burning; Burning Metal, 434-REC-R00 through R01, 2/6/87 through 1/30/89	Oxidation of the metal heel from electrorefining and preparation of oxide as feed for aqueous recovery.	None
TWCP-3548/ N-14 (UCNI)	C	P/S diagram; process description (P/S BM)	Plutonium Metal Burning; The Burning and Brushing of Plutonium Metal; 433-NMT7, R03; 433-REC-R00 through R03, 9/6/90; 5/13/94 through 8/15/97	Removal of friable plutonium oxide from metal and calcination of the metal.	None
TWCP-3548/ N-15 (UCNI)	C	Process description	Processing Lapping Oil and Similar Organics, 435-REC-R00, 3/1/78; 435-REC-R01, no date	Oils are filtered for Pu recovery. Oils <EDL are absorbed on vermiculite for disposal. Filtered solids are sent to dissolution.	None
TWCP-3548/ N-16 (UCNI)	C	Process description	Evaluation of Pu (VI) Reduction by Nitrous Oxide, 493-REC-R00, no date	Experimental procedure to use nitrous oxide to reduce Pu (VI) to Pu (IV).	Procedure has no approval signatures or date. Assume this procedure was never implemented.
TWCP-3548/ N-17 (UCNI)	C	P/S diagram; chemical list; process description (P/S CR)	Crushing and Pulverizing, 435-REC-R00 through R05, 2/18/87 through 8/25/97	Crushing and pulverizing residues to approximately 20 mesh for dissolution in nitric acid.	None
TWCP-3548/ N-18 (UCNI)	C	Diagram (not P/S); chemical list; process description	Polystyrene Cube Processing, 437-REC-R00 through R02, 1/19/83 through 10/22/84	Plutonium and depleted uranium is recovered from polystyrene plastic using crushing followed by distillation.	None

* Information Category Codes: A = forms intended for use in waste certification, B = data from controlled databases and published documents, C = unpublished data, and D = interviews, memos, and letters

TWCP Record No.	Information Category Code*	Information	Source	Summary	Limitations
Nitrate Dissolution Procedures					
TWCP-3566/ N-19 (UCNI)	C	P/S diagram; chemical list; process description (P/S UPS)	Preferential Dissolution of Uranium Oxides from a Uranium-Plutonium Oxide Mixture, 445-REC-R00 through R03, 3/14/84 through 4/15/92	Calcined residues containing depleted uranium and plutonium are dissolved in nitric acid. The uranium is contained in the filtrate and wash solutions, which are discarded to cement fixation. The insoluble plutonium oxide is then recovered by ion exchange or oxalate precipitation.	None
TWCP-3566/ N-20 (UCNI)	C	P/S diagram; chemical list; process description (P/S ATL)	Advanced Testing Line for Actinide Separations (ATLAS) Unit Operations, 491-REC-R00 through R03; 12/23/91 through 8/25/97	The ATLAS unit was a design and development, pilot plant operation that encompassed all steps of the NO_3 operations.	None
TWCP-3566/ N-21 (UCNI)	C	P/S diagram; chemical list; process description (P/S CPOD)	Catalyzed Electrochemical Plutonium Oxide Dissolver (CEPOD), 490-REC-R00 through R01; 10/10/90 through 10/13/92	Electrochemical dissolution of Pu residues. Silver nitrate was used as a catalyst.	None
TWCP-3566/ N-22 (UCNI)	C	Chemical list; process description	Recovery of Contaminated Platinum, 430-REC-R00, 3/1/78	Recovery of Pu from platinum boats using nitric/hydrofluoric acid.	None
TWCP-3566/ N-23 (UCNI)	C	P/S diagram; chemical list; process description (P/S ED)	Casting Crucible Dissolution, 425-REC-R00 and R01, 1/26/78; Four-Inch Cascading Airlift Dissolvers, 425-REC-R00 through R07, 2/18/87 through 8/15/97	Casting crucible dissolution for plutonium recovery. Dissolution of Pu residues and finely divided materials using the 4" cascading dissolvers.	None

* Information Category Codes: A = forms intended for use in waste certification, B = data from controlled databases and published documents, C = unpublished data, and D = interviews, memos, and letters

TWCP Record No.	Information Category Code*	Information	Source	Summary	Limitations
TWCP-3566/ N-24 (UCNI)	C	P/S diagram; chemical list; process description (P/S SC)	Slag and Crucible Dissolution Procedure; 424-REC-R00, 1/26/78 Dissolution of Sand, Slag, and Crucible in 6-inch Cascade Dissolvers; Six-Inch Cascade Dissolvers, 424-REC-R00 and R03 through R08, 5/18/88 through 8/26/97	Slag and crucible dissolution for plutonium recovery. Later revisions addressed recovery of Pu from residues of sand, slag, and crucible using a 6" cascade dissolver system.	None
TWCP-3566/ N-24A (UCNI)	C	Process description	Pneumatic Salt Crusher, 444-REC-R00, 1/29/90	Salt crusher is used to prepare feed materials for the six-inch cascading dissolver. No chemicals used.	None
TWCP-3566/ N-25 (UCNI)	C	P/S diagram; chemical list; process description (P/S MPD)	Multipurpose Cascade Dissolver System, 489-REC-R00 through R01, 10/04/91 through 9/27/94	Operation of multipurpose cascade dissolver system for processing impure Pu bearing feeds.	None
TWCP-3566/ N-26 (UCNI)	C	Process diagram (not P/S); process description	Alkaline Leach of Chloride Contaminated Plutonium Oxides, 450-REC-R00, 08/21/89	Chloride contaminated Pu oxides are leached using 0.5 M sodium hydroxide to remove chloride contamination.	None
TWCP-3566/ N-26A (UCNI)	C	Process description	Dissolution of High Salt and/or Chloride Contaminated Plutonium Dioxide, 448-REC-R00, 1/6/88	Recovery of plutonium from chlorinated oxide received from Rocky Flats.	This is a hand written, temporary? procedure. It may have been a proposed procedure that was never implemented. No final version of this procedure was found.
TWCP-3566/ N-27 (UCNI)	C	Process description	Distillation of Am IX Column Effluents to Reduce Acidity and Volume, 470-REC-R01, 08/27/84	Distillation of Am ion exchange column effluents to reduce acidity and volume.	None

* Information Category Codes: A = forms intended for use in waste certification, B = data from controlled databases and published documents, C = unpublished data, and D = interviews, memos, and letters

TWCP Record No.	Information Category Code*	Information	Source	Summary	Limitations
TWCP-3566/ N-28 (UCNI)	C	Diagram (not P/S); chemical list; process description, (P/S AL based on description)	Ash Leaching, 423-REC-R00 through R05, 1/26/78 through 9/14/90	Recovery of Pu from on-site and off-site ash by leaching with nitric acid and calcium fluoride.	P/S code of AL assigned based on title and description.
TWCP-3566/ N-29 (UCNI)	C	Diagram (not P/S); chemical list; process description (P/S ML based on description)	Leaching of Contaminated Metals in Nitric Acid, 431-REC-R00 and R01, 10/18/90 through 1/27/94	Recovery of Pu from non-Pu metal pieces by leaching in hot nitric acid – calcium fluoride/hydrofluoric acid.	P/S code of ML assigned based on title and description.
TWCP-3566/ N-30 (UCNI)	C	Process description	Processing of Contaminated Solids, 420-REC-R00 and R01, 01/26/78 through 07/09/84	Processing of contaminated solids for Pu recovery.	None
TWCP-3566/ N-30A (UCNI)	C	Process description	Dissolution of Materials, 440-REC-R00 through R01, 2/25/78 through 12/16/85	Dissolution of metals, alloys, casting skulls and plutonium compounds in nitric acid and hydrofluoric acid. Cr may be in the waste from metals, alloys and skulls.	None
TWCP-3566/ N-30B (UCNI)	C	Chemical list, process description.	Plutonium Metal Dissolution, 441-REC-R00 through R01, 2/25/78 through 3/2/83	Dissolution of plutonium metal and alloys in nitric acid and hydrofluoric acid.	R00 was renewed on 3/2/83. R01 has no approval signatures or date.
TWCP-3566/ N-30C (UCNI)	C	Chemical list, process description.	Dissolution of Oxide Derived from Calcination of Oxalate; Standard Operating Procedure for the Dissolution of Oxide Whose Nitrate Solutions are Destined for the Metal Prep Line; The Dissolution of Plutonium Dioxide Derived from Calcined Plutonium Oxalate, 442-REC-R00 through R02, 2/25/78 through 5/23/84	Dissolution of plutonium dioxide derived from calcined plutonium oxalate in nitric acid and hydrofluoric acid.	None

* Information Category Codes: A = forms intended for use in waste certification, B = data from controlled databases and published documents, C = unpublished data, and D = interviews, memos, and letters

TWCP Record No.	Information Category Code*	Information	Source	Summary	Limitations
TWCP-3566/ N-30D (UCNI)	C	Chemical list, process description.	Dissolution of Oxide Derived from Passivation of Carbides, Metal or Casting Skulls, 443-REC-R00 through R01, 2/25/78 through 8/2/78	Dissolution of plutonium oxides derived from plutonium carbides, anodes, metal or casting skulls that have been passivated in a furnace. The oxides are dissolved in nitric acid and hydrofluoric acid.	None
TWCP-3566/ N-30E (UCNI)	C	Diagram (not P/S), chemical list, process description.	Dissolving Chloride Melt Portion of Electrorefining Residues; Dissolving the Chloride Melt Portion of Salt-Stripping Residue, 444-REC-R00 through R01, 2/25/78 through 9/26/83	Chloride salts from electrorefining are dissolved in sodium hyroxide. Then nitric-hydrofluoric acid is used to dissolve filtered solids. Acid filtrate is sent to ion exchange. Appears to be related to hydroxide cake dissolution.	None
TWCP-3566/ N-30F (UCNI)	C	Chemical list, process description.	Dissolution of Residues for Ion-Exchange Feed; Standard Operating Procedure for the Residue for Ion-Exchange Feed, 447-REC-R00 through R01, 7/13/79 through 6/30/81	Dissolution of plutonium residues from oxide dissolution in nitric acid and hydrofluoric acid.	None
TWCP-3566/ N-31 (UCNI)	C	P/S diagram, chemical list, process description (P/S NC)	Pickling or Surface Leaching, 421-REC-R00 and R01, 1/26/78 through ?; Leaching of Noncombustible Materials in Nitric Acid, 421-REC-R03 through R09, 2/18/87 through 3/27/97	Recovery of Pu from surface contamination of noncombustible material by pickling or surface leaching.	Draft R09 also contains P/S code DO (Dissolution of Oxide)
TWCP-3566/ N-32 (UCNI)	C	P/S diagram; chemical list; process description (P/S HD, CD, HCD)	Dissolution of Chloride Generated Cake in Nitric Acid; Dissolution of Pu Hydroxide Cake in Nitric Acid, 442-REC-R00 through R03, 11/14/88 through 01/16/97	Dissolution of Pu hydroxide cake from chloride operations in nitric acid.	None

* Information Category Codes: A = forms intended for use in waste certification, B = data from controlled databases and published documents, C = unpublished data, and D = interviews, memos, and letters

TWCP Record No.	Information Category Code*	Information	Source	Summary	Limitations
TWCP-3566/ N-33 (UCNI)	C	P/S diagram; chemical list; process description (P/S MELL)	Mediated Electro-Oxidation of Low-Level Organic Waste (formerly Catalyzed Electrochemical Plutonium Oxide Dissolver), 490-REC-R02, 9/26/94	Mediation electro-oxidation of low-level organic waste (MELLOW) uses cobalt nitrate or cerium nitrate as a catalyst to recover Pu from cellulose-based material.	None
TWCP-3567/ N-34 (UCNI)	C	Chemical list; process description	Silica Removal from Americium Feed Solutions, 468-REC-R00 and R01, 10/06/83 through 11/29/83	Silica removal from Am feed solution.	None
TWCP-3567/ N-35 (UCNI)	C	Diagram (not P/S); chemical list; process description	Residue Leaching, 426-REC-R00, 2/27/87	Removal of SiO_2 from solid residues by hydrofluorination to recover Pu.	None
TWCP-3567/ N-36 (UCNI)	C	P/S diagram; chemical list; process description (P/S AT)	Incinerator Ash R&D Facility, 427-REC-R00, 8/22/88	Incinerator ash R&D facility for processing of incinerator ash from Los Alamos and Rocky Flats.	None
TWCP-3567/ N-37 (UCNI)	C	P/S diagram; chemical list; process description (P/S SP)	Dissolution of Filter Residues and Glovebox Sweepings in Hot HNO3-HF; Dissolution of Filter Residues, Impure Oxide, and Glovebox Sweepings, 446-REC-R00 through R06, 2/3/89 through 3/27/97	Plutonium recovery from residues using nitric acid with a fluoride catalyst.	None
TWCP-3567/ N-37A (UCNI)	C	P/S diagram, chemical list, process description (P/S OD and SP)	Dissolution of Impure Plutonium Dioxides, Filter Residues, and Glovebox Sweepings in Hot HNO3-HF, 447-REC-R02, 12/18/86	Plutonium recovery from residues using nitric acid with a fluoride catalyst.	P/S diagrams were added via memo on 1/28/85 and 2/13/87. Appears as though P/S diagrams were not finalized.

* Information Category Codes: A = forms intended for use in waste certification, B = data from controlled databases and published documents, C = unpublished data, and D = interviews, memos, and letters

TWCP Record No.	Information Category Code*	Information	Source	Summary	Limitations
TWCP-3567/ N-38 (UCNI)	D	LANL policy on RCRA F-codes	Interview with Pam Rogers and Alice Barr	Solvent F-codes will apply to all waste streams generated from a processing an intermediate product once solvents are identified in that process.	None
TWCP-3567/ N-39 (UCNI)	D	RCRA codes associated with hydroxide cakes.	Interview with Jim Foxx of TA-55	RCRA codes associated with hydroxide cakes from the chloride process that are fed into the nitrate process.	None
TWCP-3567/ N-40 (UCNI)	B	RCRA codes associated with hydroxide cakes from chloride operations that are fed to the nitrate operations at the dissolution step.	Acceptable Knowledge Summary for the TA-55 Chloride Operations	Description of the chloride operations and wastes generated based on review of historic operation procedures from the plutonium facility at TA-55.	None
Nitrate Ion Exchange Procedures					
TWCP-3567/ N-41 (UCNI)	C	Diagram (not P/S); chemical list; process description (P/S RCM)	Nitrate Anion Exchange for the Rich Column Material System, 472-REC-R00, 2/02/90	Nitrate anion exchange for the rich column material.	None
TWCP-3567/ N-42 (UCNI)	C	P/S diagram; chemical list; process description (P/S LR)	Nitrate Anion Exchange for the Lean Residue System, 471-REC-R00 through R02, 1/29/90 through 3/22/93	Nitrate anion exchange for the lean residue system to recover and purify Pu to weapon's grade specifications for storage as an oxide.	None
TWCP-3567/ N-43 (UCNI)	C	Diagram (not P/S); chemical list; process description (P/S RR)	Nitrate Anion Exchange for the Rich Residues Ion Exchange Column, 470-REC-R00, 11/22/89	Pu eluate solution from the ion exchange process is precipitated as an oxalate. The Pu oxalate is calcined to an oxide.	None
TWCP-3567/ N-44 (UCNI)	C	Diagram (not P/S); chemical list; process description	Nitrate Anion Exchange, 461-REC-R00 through R02, 2/25/78 through 11/29/88	Nitrate anion exchange utilizing an anion exchange resin in nitric acid that retains the nitrato complex of Pu (IV) over most cationic impurities.	None

* Information Category Codes: A = forms intended for use in waste certification, B = data from controlled databases and published documents, C = unpublished data, and D = interviews, memos, and letters

TWCP Record No.	Information Category Code*	Information	Source	Summary	Limitations
TWCP-3567/ N-45 (UCNI)	C	P/S diagram, chemical list, process description (P/S RFX LR DS)	Nitrate Anion Exchange [for the Dissolved Solids (DS) System], 473-REC-R00 through R06, 10/17/89 through 7/24/98	Nitrate anion exchange process in general. The procedure starts out describing only the dissolved solids system and changes to a general description of nitrate anion exchange.	None
TWCP-3567/ N-46 (UCNI)	C	Chemical list; process description	Procedure for Eluting Plutonium From Ion Exchange Columns, 473-REC-R00 and R01, 8/15/79 through 12/2/82	Recovery of accountable amounts of Pu by eluting the Pu from the ion exchange columns used in Am production.	None
TWCP-3567/ N-47 (UCNI)	C	P/S diagram; chemical list; process description (P/S RFX)	Nitrate Anion Exchange for the Rich-Feed Ion-Exchange System, 495-REC-R00 and R01, 4/29/92 through 12/15/93	Nitrate anion exchange for the rich-feed ion exchange system.	None
TWCP-3567/ N-48 (UCNI)	C	Process description	Alternate Procedure for Conversion of Plutonium Oxalate to Oxide; Conversion of Plutonium Oxalate to Oxide Using Heat Lamp and Hot Plate, 477-REC-R00 through R02, 2/03/81 through 5/14/87	Pu oxalate is converted to an oxide by heating with a heat lamp and hot plate.	None
TWCP-3567/ N-50 (UCNI)	C	P/S diagram; chemical list; process description (P/S OY)	Oxalate Precipitation of Nitrate Solutions, 479-REC-R00 through R03, 4/30/81 through 2/14/89	The feed for this precipitation process comes from the nitrate dissolution of relatively pure on-site and off-site oxides.	None
TWCP-3567/ N-51 (UCNI)	C	P/S diagram; chemical list; process description (P/S LR, DS, RCM, RR)	Oxalate Precipitation and Calcination of Ion-Exchange Elutes, 466-REC-R00 through R03, 2/25/78 through 6/15/89	Pu in ion exchange elutes are precipitated as an oxalate and the oxalate is calcined to an oxide. This operation feeds P/S OY.	None
TWCP-3567/ N-51A (UCNI)	C	Process description	Calcination; Hydrocalcination, 437-REC-R00 through R01, 3/5/87 through 2/13/89	Wet plutonium oxalate cake is burned in a furnace and converted to plutonium oxide.	None

* Information Category Codes: A = forms intended for use in waste certification, B = data from controlled databases and published documents, C = unpublished data, and D = interviews, memos, and letters

TWCP Record No.	Information Category Code*	Information	Source	Summary	Limitations
TWCP-3567/ N-52 (UCNI)	C	P/S diagram; chemical list, process description (P/S PR)	Peroxide Precipitation, 480-REC-R00 and R01, 1/21/87 to 2/14/89	Separation of Pu from catatonic impurities with the use of hydrogen peroxide for precipitation of the Pu.	None
TWCP-3567/ N-53 (UCNI)	C	Diagram (not P/S); chemical list; process description	Peroxide Precipitation, 464-REC-R00 and R01, 2/25/78 through ?	Separates Pu from cationic impurities such as Ca, Cr, Mg, Ce, Co, Al, and Am by peroxide precipitation	None
TWCP-3567/ N-54 (UCNI)	C	Diagram (not P/S); chemical list; process description	Thorium Fluoride Precipitation, 468-REC-R00 and R01, 1/26/78 through ?	Separates thorium from Pu by forming the insoluble ThF_4 precipitate.	None
TWCP-3567/ N-55 (UCNI)	C	P/S diagram; chemical list; process description (P/S OH)	Procedure for Americium Hydroxide Precipitation and Filtration ; Filtration of Caustic-Treated Peroxide Filtrates, 469-REC-R00 through R03, 8/15/79 through 12/19/86	Am recovery from the filtrate which results from the precipitation of Pu peroxide in the FFTF Oxide Production Process. Filtration of caustic-treated peroxide filtrates. These solutions are generated with the peroxide filtrate solutions and are dripped in to a caustic solution to destroy peroxide.	None
TWCP-3567/ N-56 (UCNI)	C	Process description	Homogenization of Plutonium Oxide Product by Auger Mixing, 432-REC-R00, 02/14/89	Homogenization of PuO_2 by auger mixing.	None
TWCP-3567/ N-57 (UCNI)	C	P/S diagram; process description (P/S RB and RBJ)	Oxide Roasting and Blending, 433-REC-R00 through R01, 1/28/87 through 1/30/89	Assayed oxide from the vault is blended, sintered, reblended and sampled. This material is then used as feed for Pu metal production or direct oxide reduction. Pu metal may also be burned to an oxide.	None

* Information Category Codes: A = forms intended for use in waste certification, B = data from controlled databases and published documents, C = unpublished data, and D = interviews, memos, and letters

TWCP Record No.	Information Category Code*	Information	Source	Summary	Limitations
TWCP-3567/ N-57A (UCNI)	C	P/S diagram; process description (P/S RBJ)	Roasting and Blending JR., 443-REC-R00 and 443-REC-R02, 1/30/89 through 10/30/89	Pu oxide is reburned, sieved, blended, and sampled.	None
TWCP-3567/ N-57B (UCNI)	C	P/S diagram; process description (P/S RBJ, RB)	Roasting and Blending JR., 434-NMT7-R00, 3/6/92; 434-NMT7-R03, 3/3/93; 434-REC-R00 (Draft and Final) through 434-REC-R02, 4/15/94 through 8/15/97	Pu oxide is reburned, sieved, blended, and sampled.	None
TWCP-3567/N-59 (UCNI)	C	Process description (P/S DS and RR)	Sampling Procedure for the Ion-Exchange Process – DS and RR, 417-GEN-R00 and R01, 4/17/86 through 1/23/89	Collecting samples of nitrate solutions to determine plutonium content and determine which ion exchange process should be used for recovery	None
Nitrate Evaporator Procedures					
TWCP-3568/ N-61 (UCNI)	C	P/S diagram; chemical list; process description (P/S EV)	Treatment of Evaporator Bottoms, 485-REC-R00 through R02, 7/13/84 through 2/09/89	Treatment of evaporator bottoms generated from the volume reduction of feed from ion exchange columns. The reduced solution goes to cement fixation and the salts are discarded.	None
TWCP-3568/ N-62 (UCNI)	C	P/S Diagram; process description (P/S EV)	Computer Operated Nitric Acid Volume Reduction & Treatment of Evaporator Bottoms, 485-REC-R00 through R03, 10/4/89 through 8/31/95	Computer operated nitric acid volume reduction and treatment of evaporator bottoms.	None
TWCP-3568/ N-63 (UCNI)	C	P/S diagram; process description (P/S EV)	Nitric Acid Process Evaporator, 485-REC-R04 and R05, 11/20/96 through 9/9/97	Evaporation process for reducing the volume of process-generated nitric acid/salt mixtures.	None

* Information Category Codes: A = forms intended for use in waste certification, B = data from controlled databases and published documents, C = unpublished data, and D = interviews, memos, and letters

TWCP Record No.	Information Category Code*	Information	Source	Summary	Limitations
TWCP-3568/ N-64 (UCNI)	C	P/S diagram; chemical list process description (P/S EV)	Process Nitric Acid Volume Reduction, 484-REC-R00 through R02, 10/5/84 through 3/15/90	Nitric acid volume reduction by processing ion exchange effluent through an evaporator.	None
TWCP-3568/ N-65 (UCNI)	C	Chemical list; process description	Volume Reduction of Nitrate Feed Solutions Using a Mini-Evaporator, 496-REC-R00, 10/23/95	Operation of the mini-evaporator to reduce the volume of nitrate feed solutions.	None
TWCP-3568/ N-66 (UCNI)	B	RCRA-codes for evaporator bottoms	Development of Control Charts for the Evaporator Bottoms Newly Generated Waste Stream from TA-55, 3/19/99	Based on the development of control charts for analytical results, evaporator bottoms were determined to be hazardous for chromium, lead, and mercury.	None
Nitrate Cement Fixation Procedures					
TWCP-3568/ N-67 (UCNI)	C	Process description (P/S CF)	Auxiliary Activities for Cement Fixation, TRU-NMT2-DP11-R00 (Draft), 04/13/94	Auxiliary activities for cement fixation, such as preparing the 55-gallon drum, attaching and detaching drums from glovebox, and filing the cement hopper.	None
TWCP-3568/ N-68 (UCNI)	C	Process description (P/S CF)	Calibration of the pH Electrode for Cement Fixation, TRU-NMT2-DP-06-R00, no date	Calibration and maintenance of pH electrodes used to measure the pH of waste solutions as part of the CF process.	None
TWCP-3568/ N-69 (UCNI)	C	P/S Diagram; chemical list; process description (P/S CF)	Cement Fixation of Process Residues in 55-Gallon Drums, TRU-NMT2-DP-04, R00; TRU-NMT7-DP-04, R01 and R02; TRUWM-TA55-DP-04-R00 (Draft), 8/6/93 through 06/21/94	Cement fixation of liquid and particulate process residues in 55-gallon drums.	None

* Information Category Codes: A = forms intended for use in waste certification, B = data from controlled databases and published documents, C = unpublished data, and D = interviews, memos, and letters

TWCP Record No.	Information Category Code*	Information	Source	Summary	Limitations
TWCP-3568/ N-70 (UCNI)	C	P/S Diagram; Process; description (P/S CF)	Certification of Waste for Cement Fixation, TRU-NMT2-DP-12, R00; Certifying Waste for Cement Fixation, TRUWM-TA55-DP-12-R00; 4/20/93 through 7/10/97	Describes how TA-55 personnel ensure waste destined for CF are properly characterized, accounted for, and documented.	None
TWCP-3568/ N-71 (UCNI)	C	Process description (P/S CF)	Documentation for Cement Fixation, TRU-NMT2-DP-14, R00 and R01; TRUWM-TA55-DP-14-R00; 3/04/93 through 7/10/97	Documentation for cement fixation. Describes completing the paperwork and assembling the data package that is required to accompany each drum destined for WIPP.	None
TWCP-3568/ N-72 (UCNI)	C	Chemical list; process description (P/S CF)	Cement Fixation of Process Residues in One-Gallon Cans, TRU-MST12-DP-03, R00, 04/27/87	Process residue TRU waste at TA-55 immobilized for compliance with WIPP WAC.	None
TWCP-3568/ N-73 (UCNI)	C	Diagram (not P/S); chemical list; process description	Scrubber System for Cement Fixation Operations, 483-REC-R00, 01/30/89	Operation of the nitric acid scrubber system to prevent the premature replacement of HEPA filters used in cementing operations.	None
TWCP-3568/ N-74 (UCNI)	C	Chemical list; process description (P/S CF)	Organic Liquid Emulsification, TRU-NMT2-DP-13, R00; TRUWM-TA55-DP-13-R00; 8/30/93 through 9/30/94	Emulsifying waste oil and other organic liquids for cement fixation.	None
General Documents Applicable to the Nitrate Process					
TWCP-3568/ N-76 (UCNI)	D	Comments on draft Nitrate Process AK Report	Interview with Tim Hayes of TA-55 Nitrate Operations, 1/4/00	Clarifications on various aspects of the Nitrate process, including P/S codes, time periods for P/S codes and specific operations, and appropriate terminology.	None

* Information Category Codes: A = forms intended for use in waste certification, B = data from controlled databases and published documents, C = unpublished data, and D = interviews, memos, and letters

TWCP Record No.	Information Category Code*	Information	Source	Summary	Limitations
TWCP-3568/ N-77 (UCNI)	D	Additional P/S diagrams assigned to Nitrate Process	Memo from Jim Foxx of TA-55, 1/17/2000	P/S diagrams and codes assigned to Nitrate Operations by TA-55 personnel.	The diagrams are provided as "stand-alone" pieces of information. There are no procedures associated with these diagrams and so chemical use, process description, and applicability to the nitrate process can not be established.
TWCP-3568/ N-79 (UCNI)	C	Clarification of information for all processes within the nitrates operations	Comments from Tim Hayes and Jim Foxx on the Acceptable Knowledge Summary for TA-55 Nitrate Operations, 2/25/00	Details provided for all processes within the nitrates operations.	None
TWCP-3568/ N-81 (UCNI)	C	Process descriptions, RCRA constituents, dates of generation, waste disposition (various P/S codes)	Nitrate Acceptable Knowledge Report forms completed by SMEs Tim Hayes and Jim Foxx	General process descriptions, RCRA constituents, dates of generation, and waste disposition for P/S codes without procedures.	Procedures do not exist for these P/S codes. This information is based on SME knowledge.
TWCP-3568/ N-82 (UCNI)	D	Clarification of specific processes within the Nitrates operations	Jim Foxx, SME, response to comments received on the Acceptable Knowledge Summary for TA-55 Nitrate Operations, 2/25/00	Resolutions to the questions and issues raised by Pam Rogers during her review of the Acceptable Knowledge Summary for TA-55 Nitrate Operations, 2/25/00	Information is based on SME knowledge.
TWCP-3568/ N-83 (UCNI)	D	Clarification of policy on assigning EPA HWNs to D-listed constituents in TRU waste streams.	Pam Rogers, email to John Musgrave, "Re: A Few Issues," 4/11/00.	All TRU waste streams containing RCRA D-listed hazardous constituents will be assigned the applicable D-code(s) unless analytical data or other acceptable information demonstrates that the concentration of the constituent is below the regulatory limit. The text will establish the caveat that the D-code can be revised (removed) based on obtaining additional information.	This policy is contrary to the WIPP WAP; however, the policy allows revisions to D-code assignments based on additional information obtained.

* Information Category Codes: A = forms intended for use in waste certification, B = data from controlled databases and published documents, C = unpublished data, and D = interviews, memos, and letters

TWCP Record No.	Information Category Code*	Information	Source	Summary	Limitations
TWCP-3568/ N-84 (UCNI)	D	Leaching equipment may result in chromium, cadmium, and/or lead being in the solution. Text regarding ensuring that incompatible waste is not packaged together is provided.	Rosemary Glenn, email to Karen Chandler, "Re: Chromium," 6/8/00 and John Musgrave, email to Karen Chandler, "Re: Light Bulb!" 6/14/00. This email conveys information received from John Musgrave and Pam Rogers.	Processes that leach equipment may have chromium, cadmium, and/or lead in the solutions from stainless steel, shielding, and other metal feed materials. TA-55 runs a DOT incompatibility analysis on waste being sent to TA-54.	
TWCP-3730 (UCNI)	B	Pyrophoricity characterization	Characterization of Direct Oxide Salts (LA-CP-95-0098)	Hydrogen generation and pyrophoricity of DOR salts. Also gives reference for MSE, ER, and Cr-containing salts.	None
TWCP-[illegible]	D	Sodium pyrophoricity in pyrochemical salts	Memo (MST-12-ARO-88-052)	Treatment of sodium in salts is effective	Sodium only
TWCP-[illegible]	C	Experimental data on calcium pyrophoricity in salts	Memo (MST-12-ARO-88-077)	Treatment of calcium in salts is effective	Calcium only
TWCP-3943	B	Procedure for Waste Management at TA-55	TA-55 Document, 406-GEN-R00	Contains information on waste management procedures in 1978	None, but doesn't address today's waste management concerns
TWCP-4100	D	Information on P/S/ code VP2	Nitrate AK report form completed by SME Jim Foxx, and corrected on 09/26/00	General process description, RCRA constituents, time line, and waste disposition	Procedures do not exist for these P/S codes. This information is based on SME knowledge
TWCP-4162	D	Answers to questions about P/S codes PB, PuBe, CC, MB, MS, FF, BF, and other issues	Interview with Jim Foxx, 10/12/00	Answers to questions on use of asbestos at TA-55, non-defense activities, and specific P/S codes in chloride operations.	None
TWCP-4164	D	Answers to questions about various P/S codes	Interview with Jim Foxx, 10/16/00	Answers to questions on use of Ag, disposal of ash and resins, and use of gases.	None

* Information Category Codes: A = forms intended for use in waste certification, B = data from controlled databases and published documents, C = unpublished data, and D = interviews, memos, and letters

TWCP Record No.	Information Category Code*	Information	Source	Summary	Limitations
TWCP-4166	D	Answers to questions about P/S codes DO, EV, HP, CF, OR, RM, PY	Interview with Jim Foxx, 10/17/00	Answers to questions on use of Cr and Ag, RCRA metals in cement, asbestos in furnaces and gloves, and disposal of spray cans used in gloveboxes.	None
TWCP-4167	D	Answers to questions about segregation of non-defense wastes; leachability of Ag from ash	Interview with Jim Foxx, 10/18/00	Segregation of non-defense wastes began on 27 August 1998; analytical data show that Ag in ash is below limits of regulatory concern	None
TWCP-4720	B	Describes the procedure to be taken at TA-55 in the event of a misfire or unconsumed explosives (from the Impact Test Facility 40-mm gun, P/S codes ITF and ITF4) to ensure that explosives do not enter the waste stream	40-mm Powder Breech Project Waste Management Plan, Rev. 2 (issued March 27, 2000)	Procedure to be taken at TA-55 in the event of a misfire or unconsumed explosives (from the Impact Test Facility 40-mm gun) to ensure that explosives do not enter the waste stream	Does not appear to be a controlled document. Without revision history, cannot tell when this document was first issued, and how the potential for unconsumed explosives was addressed when the Impact Test Facility (ITF) began in 1996
TWCP-5164	D	Sources of Cs-137 and Pa-231 in TA-55 TRU waste	Interview with Jim Foxx (TA-55 SME) on April 2, 2001	Plutonium operations never handled Cs-137 or Pa-231 in any of the Pu processing areas at TA-55. However, Cs-137 is expected to be present in the wastes because it is a fission product of several Pu isotopes. Pa-231 is expected to be present (as a function of the age of the waste) because it is a decay chain daughter of Pu-239 and U-235.	None

* Information Category Codes: A = forms intended for use in waste certification, B = data from controlled databases and published documents, C = unpublished data, and D = interviews, memos, and letters

TWCP Record No.	Information Category Code*	Information	Source	Summary	Limitations
TWCP-5165	D	Sources of Cs-137, Pa-231, and Cm-244 in TA-55 TRU waste	Interview with Jim Foxx (TA-55 SME) on April 11, 2001	Dominant source of Cs-137 expected to be due to residual contamination from original separation of Pu from production fuel. Cm-244 introduced in P/S code DOP starting in 1988, but could also show up after that date in IS, WE, CA and CF.	None
TWCP-5371	D	Source and processing of HRA materials	Interview with Jim Foxx (TA-55 SME) on April	HRA refers to process residues sent from Hanford Reservation to TA-55 for plutonium recovery. This material was sent through nitrate operations but its waste was tracked by its source code (HRA) instead of the P/S code in which the waste was generated. To be conservative, all HWNs that are applicable to P/S codes in nitrate operations (other than the cementation processes CF and HP) are also applied to wastes from HRA. These HWNs are D005, D006, D007, D008, D009, and D011.	None
TWCP-AK-2.1-002,R.2	A	*Process Acceptable Knowledge Report for Chloride Operations at TA-55*	Generators interview and TWCP AK references	Detailed information on each P/S code for chloride operations at TA-55	None
TWCP-AK-2.1-003,R.2	A	*Process Acceptable Knowledge Report for Metal Operations at TA-55*	Generators interview and TWCP AK references	Detailed information on each P/S code for metal operations at TA-55	None

* Information Category Codes: A = forms intended for use in waste certification, B = data from controlled databases and published documents, C = unpublished data, and D = interviews, memos, and letters

TWCP Record No.	Information Category Code*	Information	Source	Summary	Limitations
TWCP-AK-2.1-004,R.2	A	*Process Acceptable Knowledge Report for Miscellaneous Operations at TA-55*	Generators interview and TWCP AK references	Detailed information on each P/S code for miscellaneous operations at TA-55	None
TWCP-AK-2.1-006,R.2	A	*Process Acceptable Knowledge Report for Pyrochemical Operations at TA-55*	Generators interview and TWCP AK references	Detailed information on each P/S code for pyrochemical operations at TA-55	None
TWCP-AK-2.1-007,R.2	A	*Process Acceptable Knowledge Report for Special Processing Operations at TA-55*	Generators interview and TWCP AK references	Detailed information on each P/S code for special processing operations at TA-55	None
TWCP-PLAN-0.2.7-001,R.5	C	*Los Alamos National Laboratory Transuranic Waste Characterization AK Information Summary*	LANL TA-55 waste management database, LANL TA-54 TRU waste management database, and TWCP AK reference base on generator's original data	Detailed information on each waste drum and waste stream	None

* Information Category Codes: A = forms intended for use in waste certification, B = data from controlled databases and published documents, C = unpublished data, and D = interviews, memos, and letters

MAP OF LANL

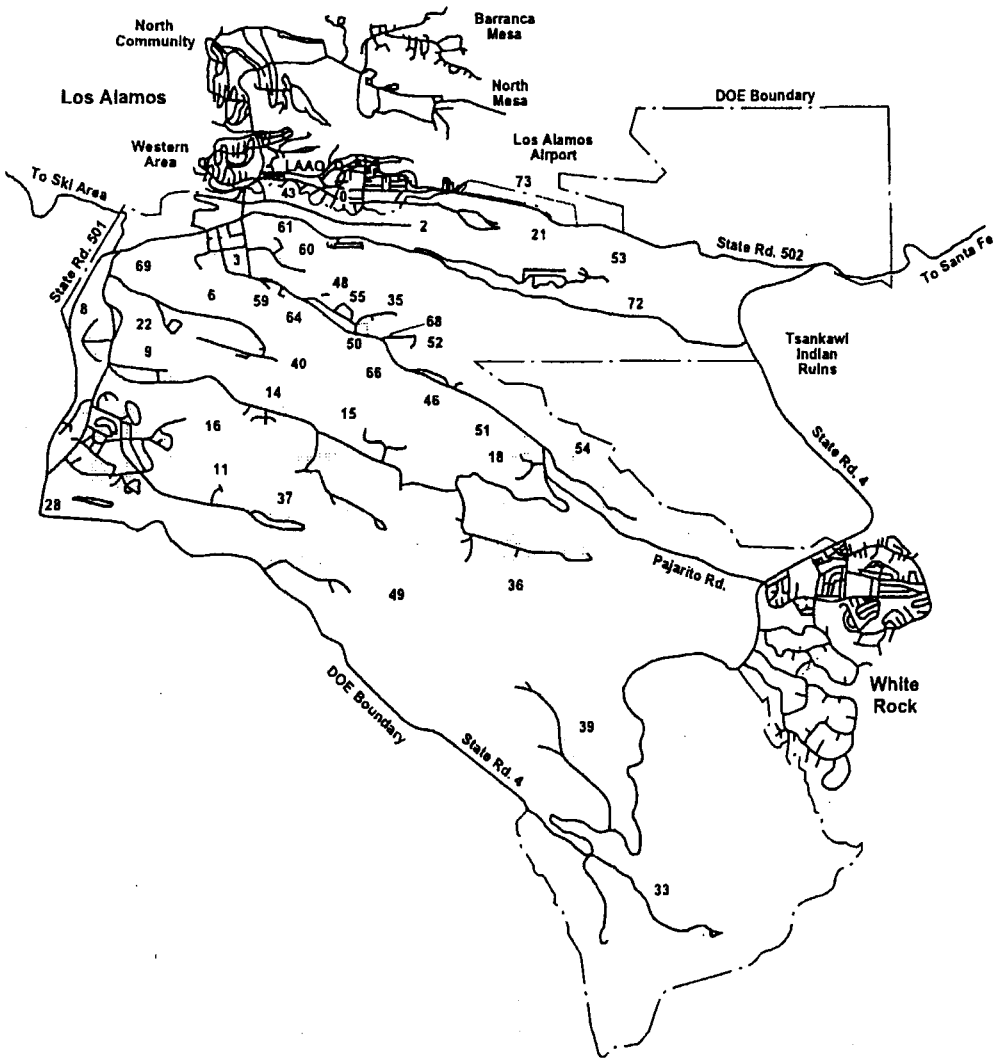

Technical Area Locations

TA-0	Unassigned Land Reserve
TA-2	Omega Site
TA-3	South Mesa Site
TA-5	Beta Site
TA-6	Two Mile Mesa Site
TA-8	Anchor Site West
TA-9	Anchor Site East
TA-11	K-Site
TA-14	Q-Site
TA-15	R-Site
TA-16	S-Site
TA-18	Pajarito Laboratory
TA-21	DP-Site
TA-22	TD-Site
TA-28	Magazine Area A
TA-33	HP-Site
TA-35	Ten Site
TA-36	Kappa Site
TA-37	Magazine Area C
TA-39	Ancho Canyon Site
TA-40	DF-Site
TA-41	W-Site
TA-43	Health Research Lab & DOE Headquarters
TA-46	WA-Site
TA-48	Radiochemistry Site
TA-49	Frijoles Mesa Site
TA-50	Waste Management Site
TA-51	Radiation Exposure Facility
TA-52	Reactor Development Site
TA-53	Meson Physics Facility
TA-54	Waste Disposal Site
TA-55	Plutonium Facility Site
TA-57	Fenton Hill Site
TA-58	Two Mile North Site
TA-59	OH-Site

MAP OF TA-55

Note: The Plutonium Facility, Building PF-4, is labeled PF-4 on this map.

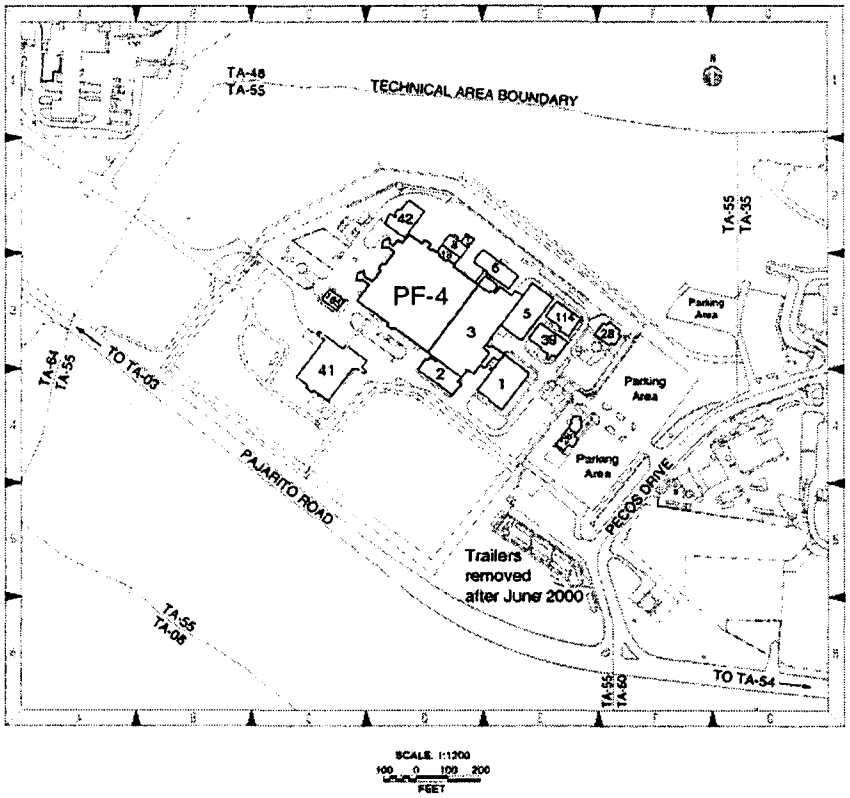

TIMELINE FOR NITRATE OPERATIONS

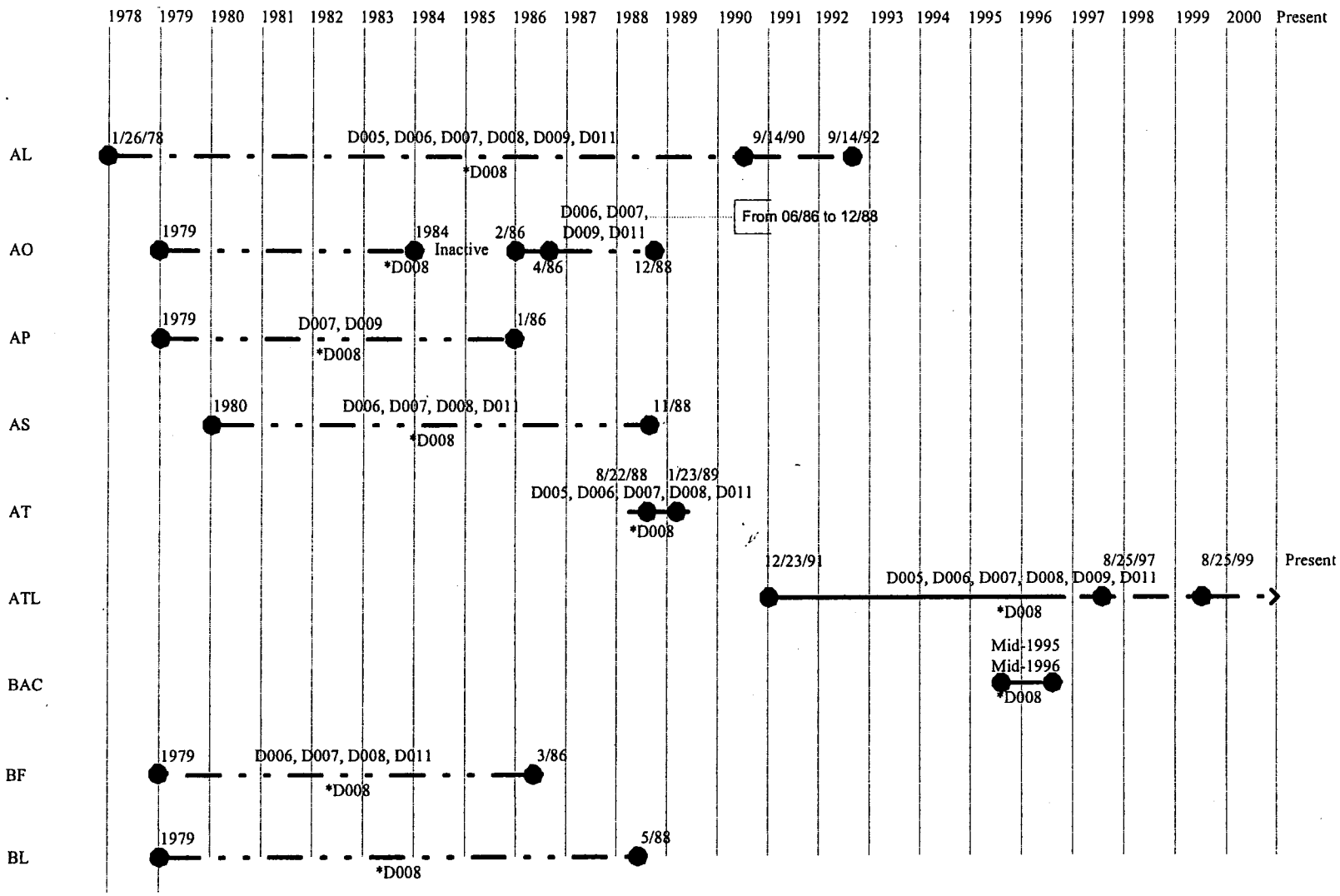

TIMELINE FOR NITRATE OPERATIONS (continued)

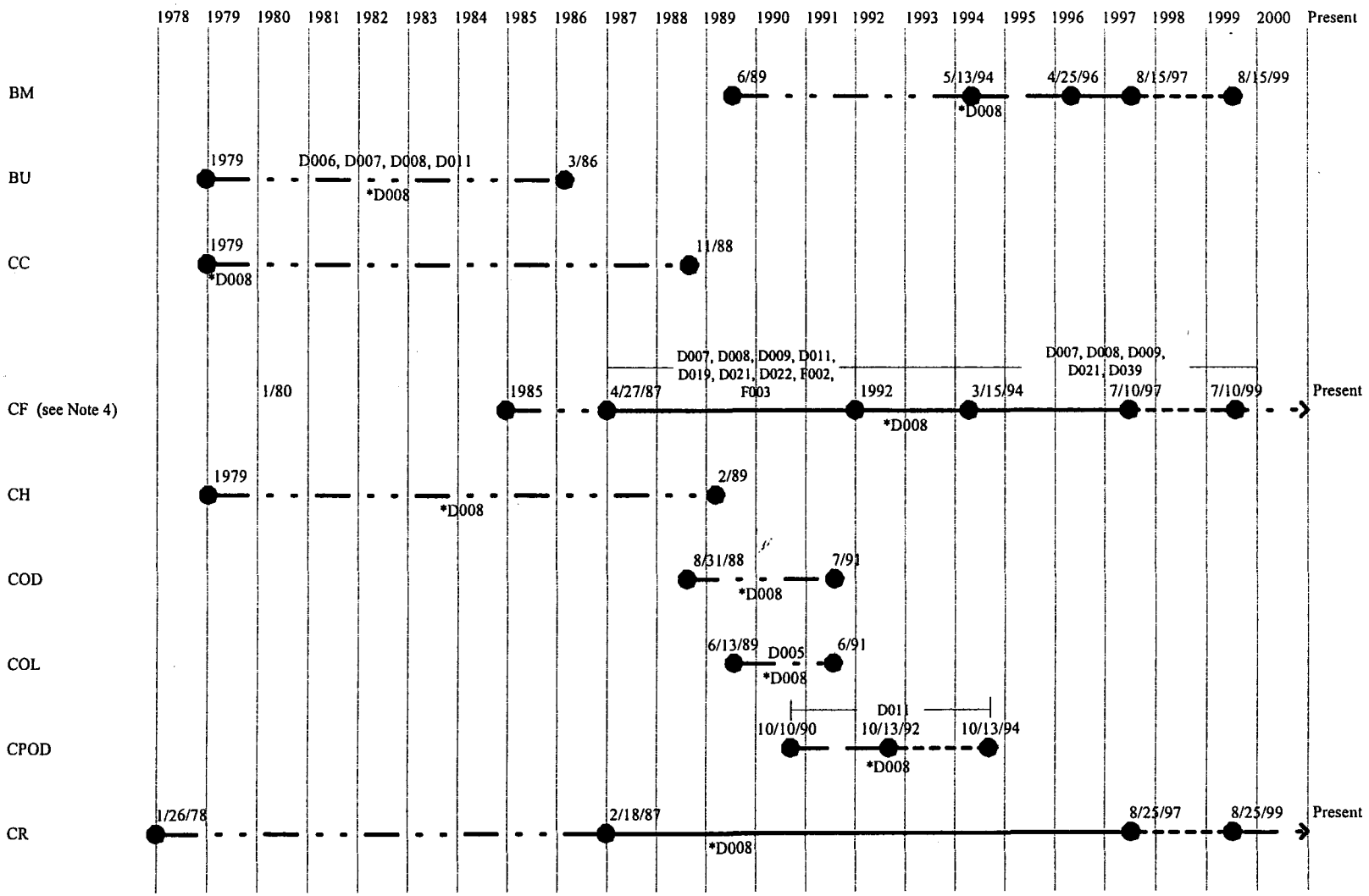

TIMELINE FOR NITRATE OPERATIONS (continued)

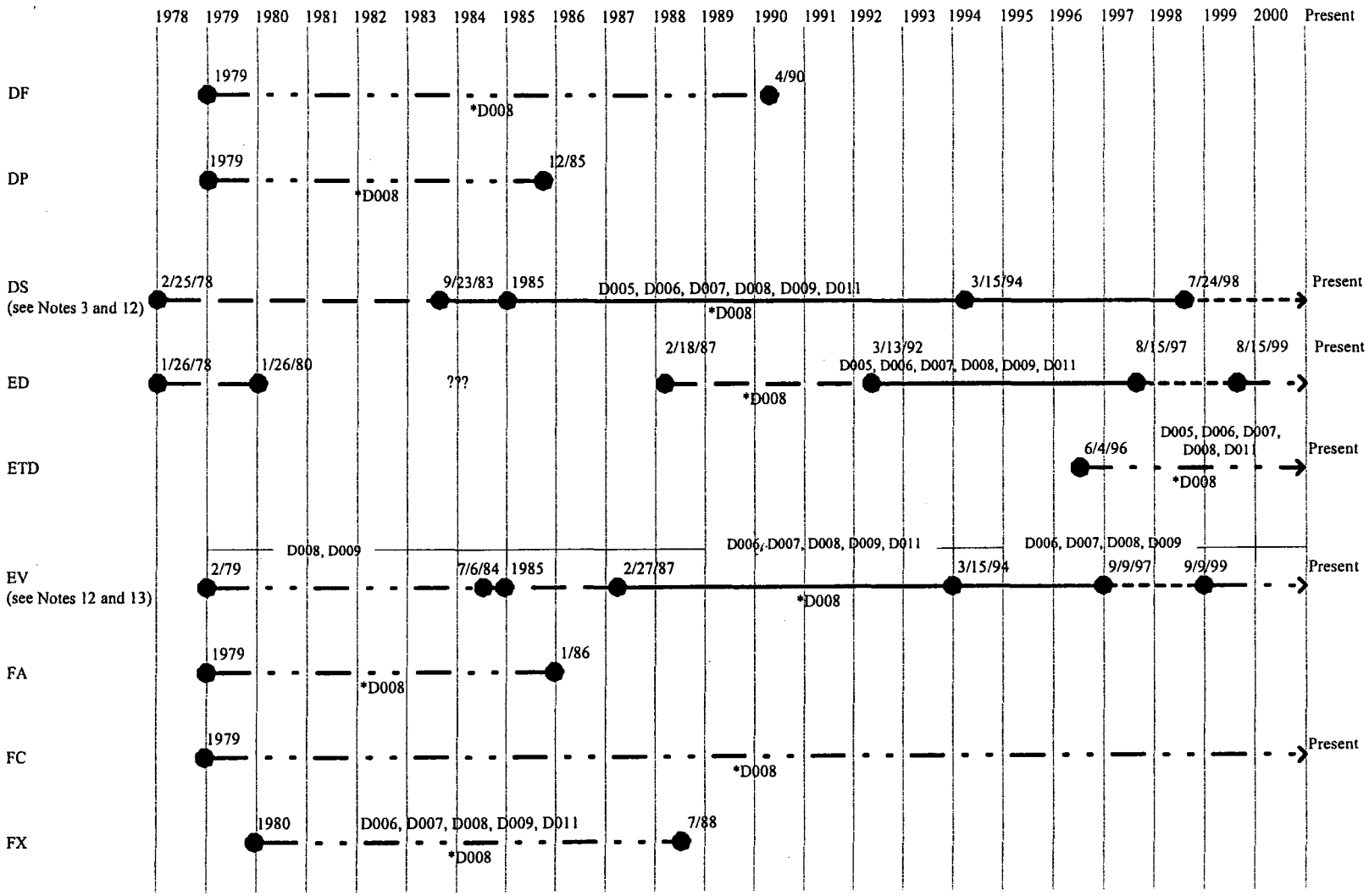

TIMELINE FOR NITRATE OPERATIONS (continued)

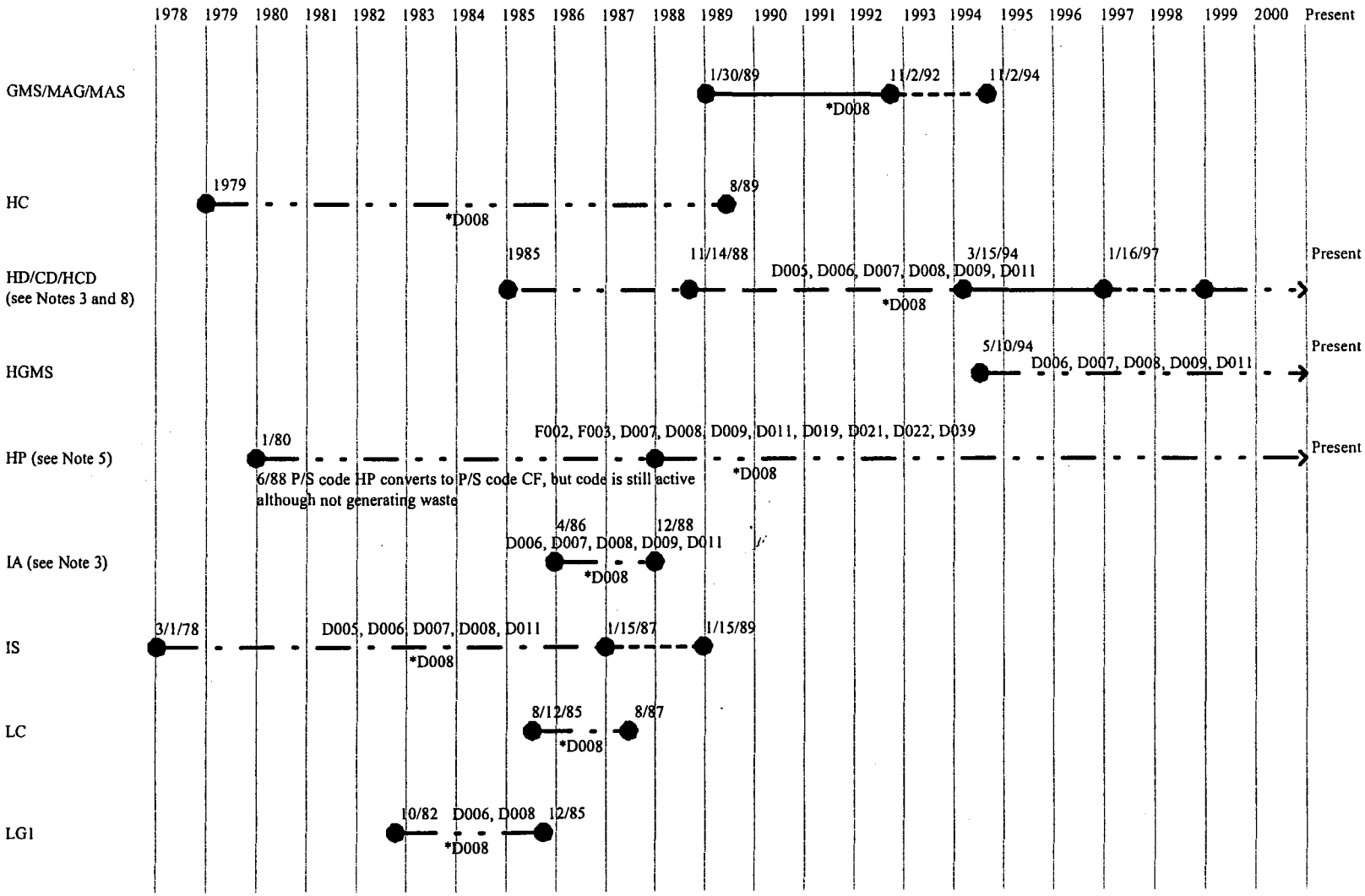

TIMELINE FOR NITRATE OPERATIONS (continued)

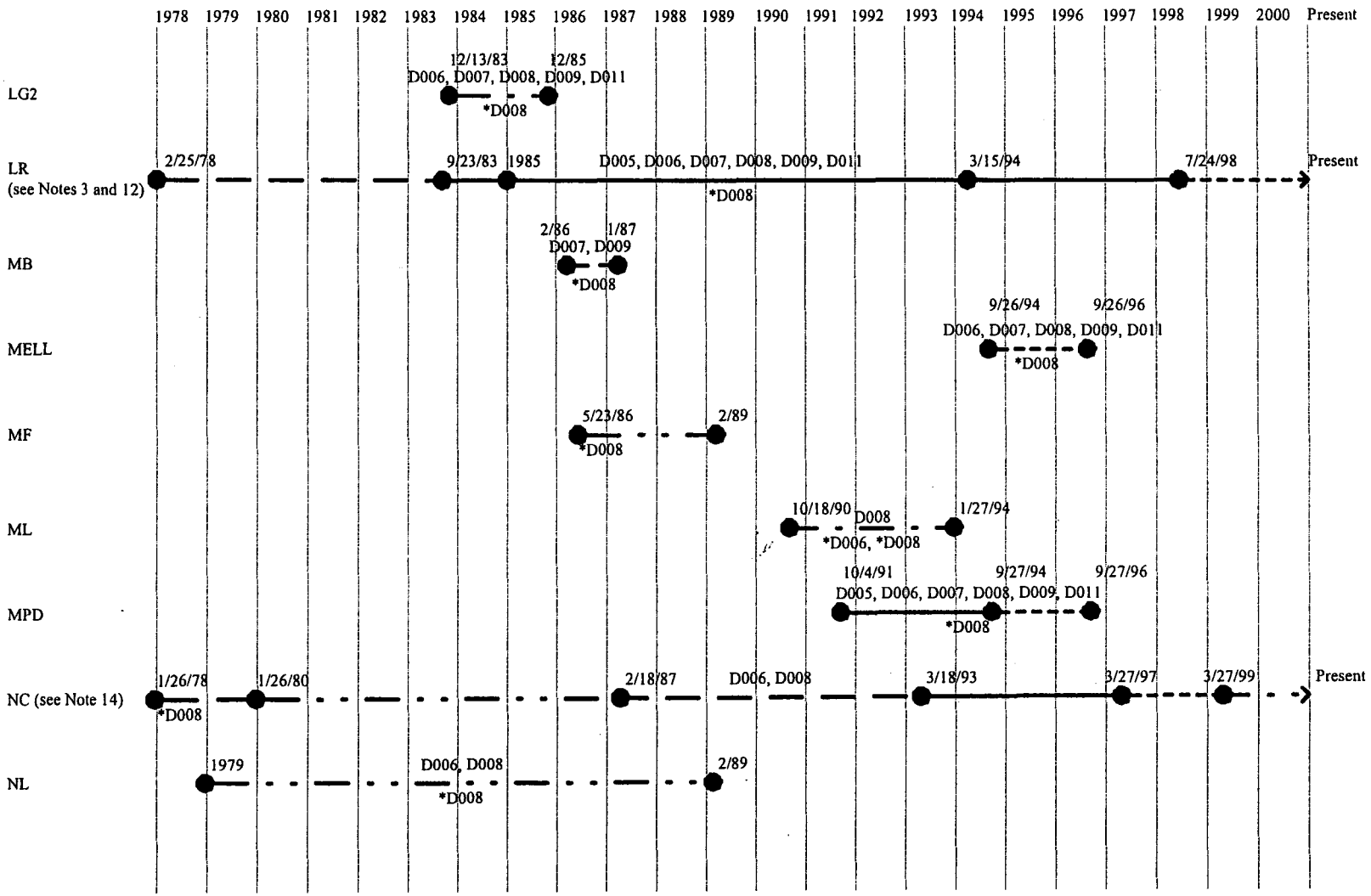

TIMELINE FOR NITRATE OPERATIONS (continued)

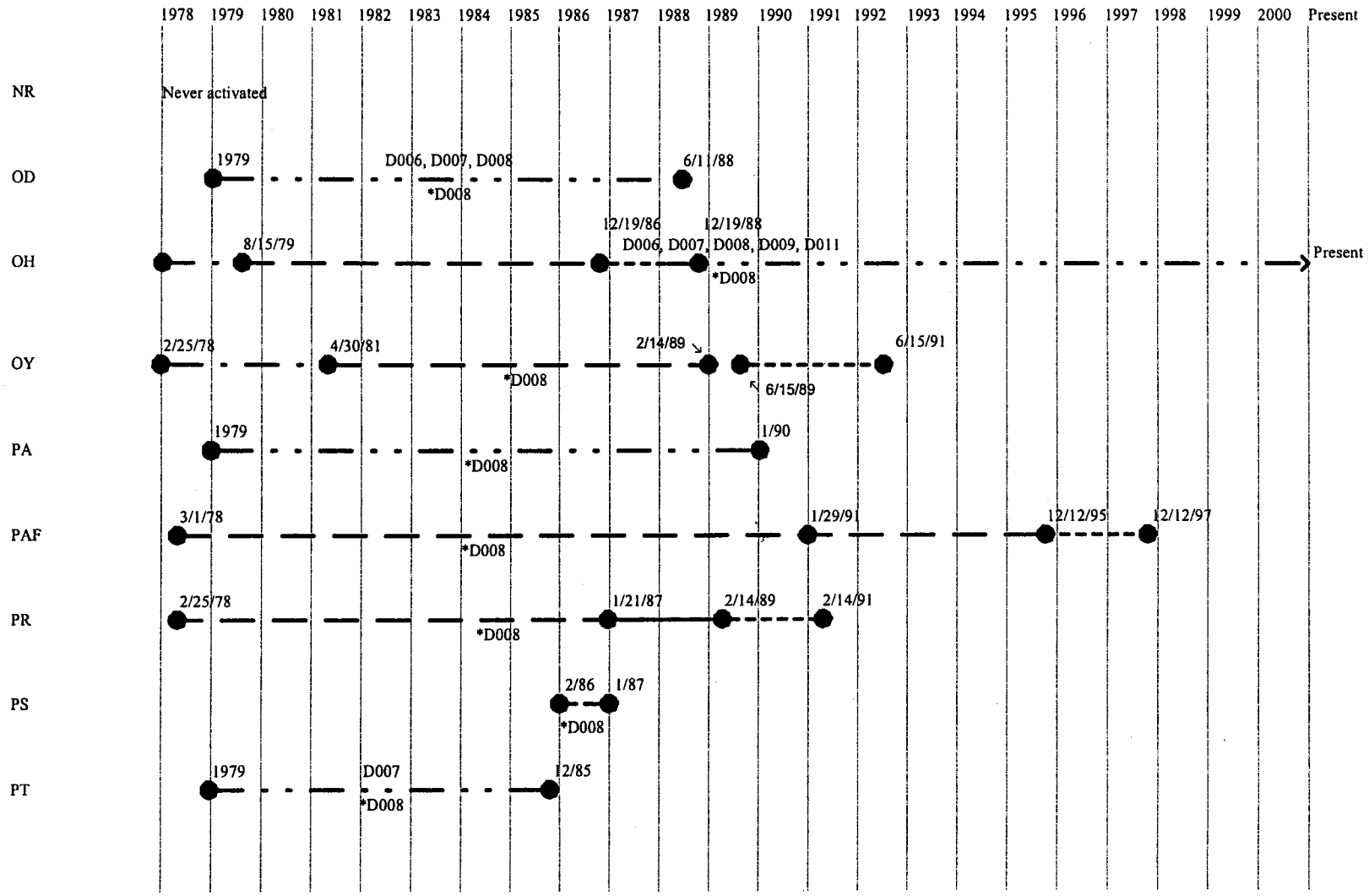

TIMELINE FOR NITRATE OPERATIONS (continued)

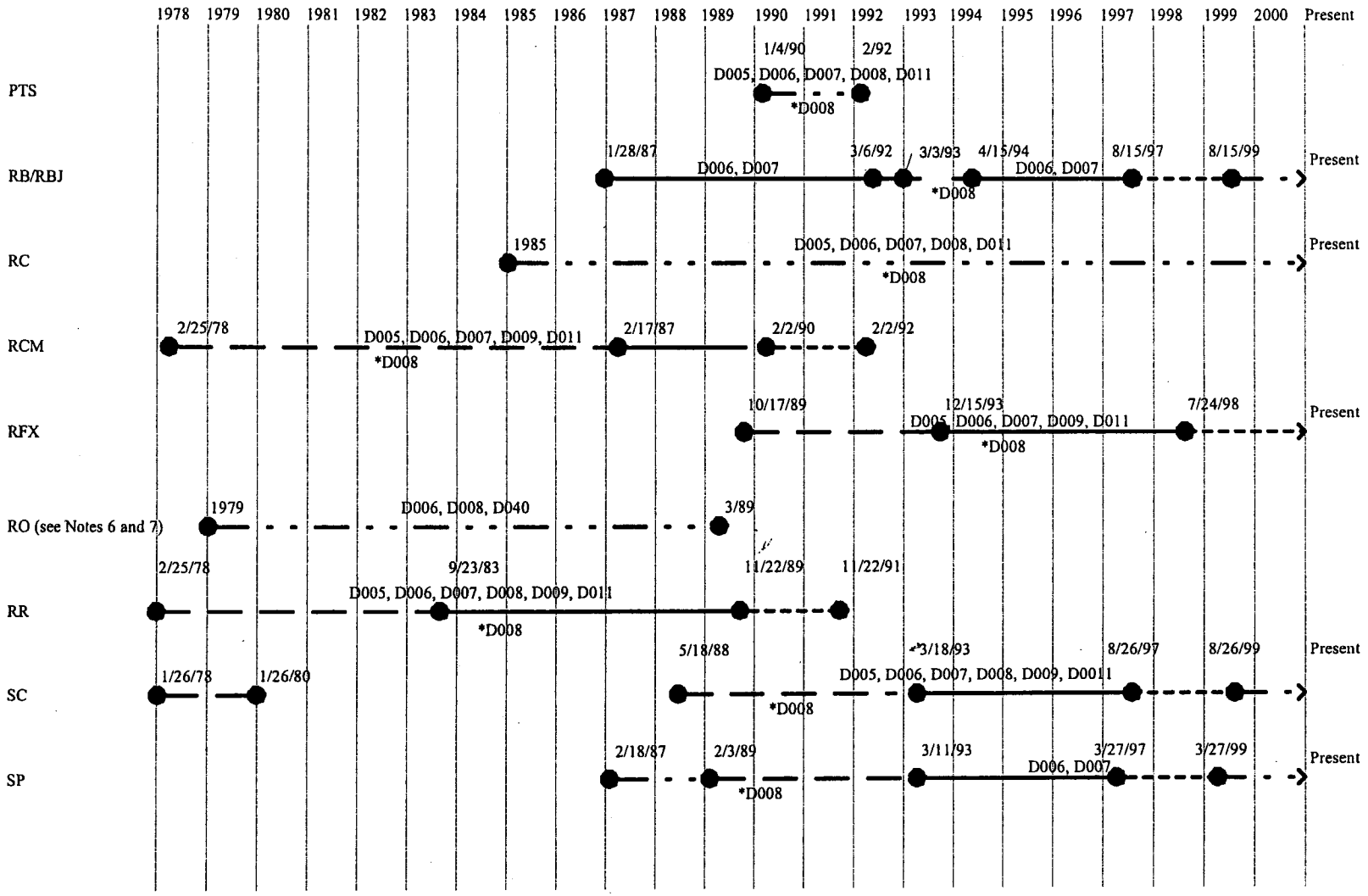

TIMELINE FOR NITRATE OPERATIONS (continued)

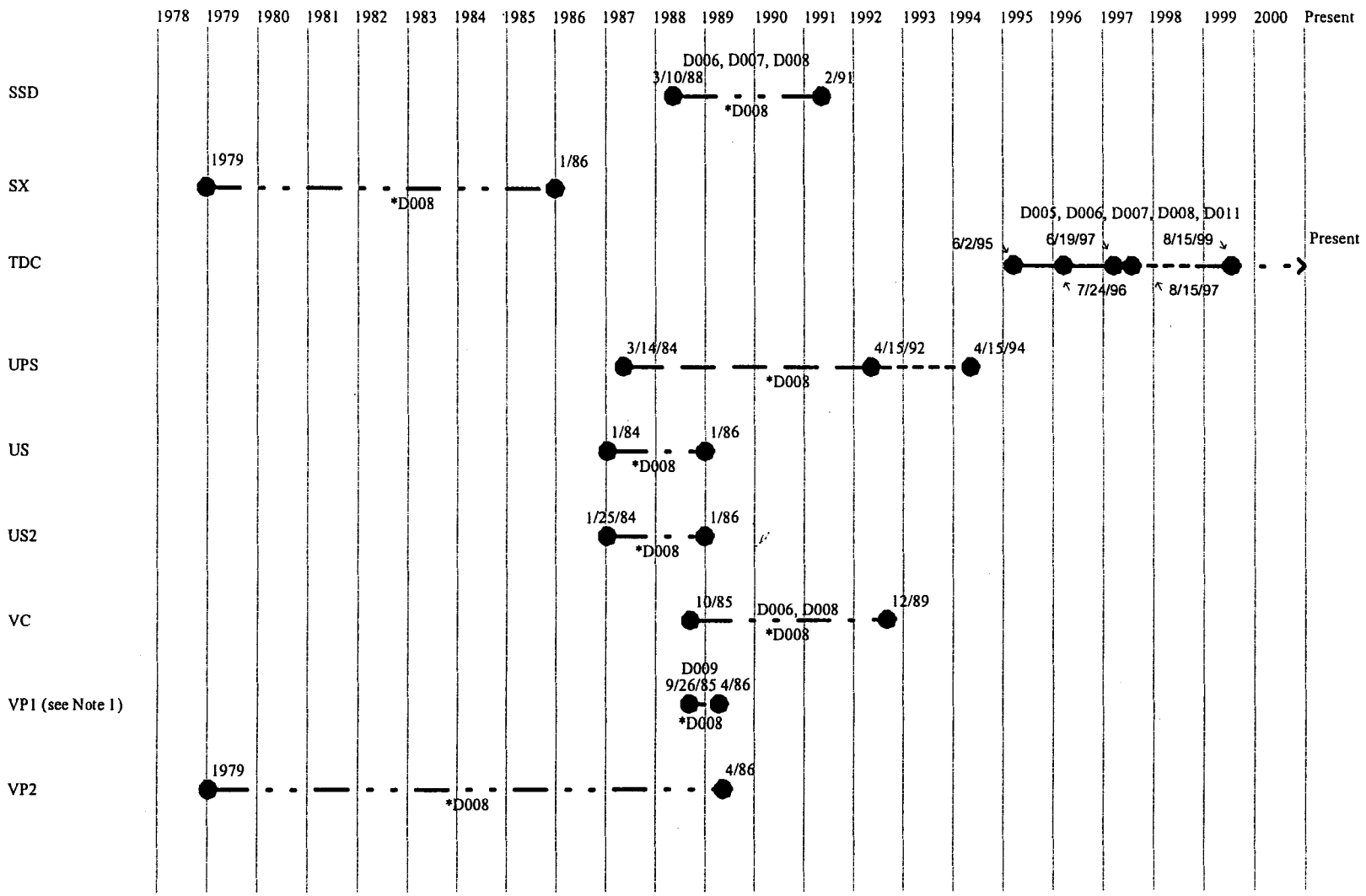

TIMELINE FOR NITRATE OPERATIONS (continued)

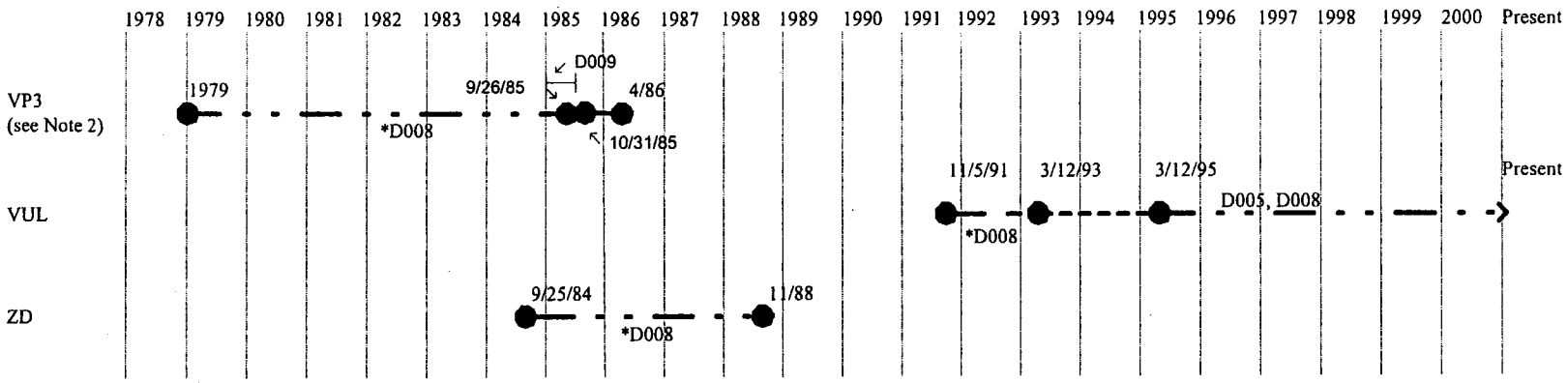

Notes on Time Dependence of RCRA Codes

* D008 - Applies to leaded gloves which were discarded in a separate waste stream after 1992, still under the originating P/S code.
[1] D009 - Mercuric nitrate used in P/S code VP1 from 9/85 to 10/85.
[2] D011 applies to hydroxide cakes in VP3 from 9/85 to 10/85.
[3] D011 -Silver nitrate used in chloride ion exchange from 1985 until end of 1993, hence D011 applies to CD, EV, HCD, HD, IA, DS, and LR.
[4] D011 applies to P/S code CF from 1985 through 1993.
[5] F002 - RCRA-listed solvent use discontinued in chloride operations in 1992, but waste containing these solvents may have been generated until the end of 1993. Affected P/S codes in nitrate are CF and HP.
[6] D006 and D008 applies to P/S code RO from 1979 to 3/89.
[7] D040 applies to P/S code RO during 1979.
[8] D006, D007, D008, D009 applies to P/S codes CD, HCD, and HD from 1985 to the present.
[9] D006 and D008 applies to P/S code ML from 10/18/90 to 1/27/94.
[10] D006 and D008 applies to P/S code VC from 10/85 to 12/89.
[11] D006, D007, and D008 applies to P/S code SSD from 3/88 to 2/91.
[12] D006, D007, D008, D009 applies to P/S codes DS, EV, and LR from 1985 to the present.
[13] D008 and D009 applies from 2/79 to 7/84.
[14] D006 and D008 applies from 1/78 to present.

TIMELINE EXPLANATION

The P/S code is established in either the P/S diagrams or in both (or all) revisions of the procedures designating the start and end dates (e.g., Rev. 0 to Rev. 1; or Rev. 0 to Rev. 5).

The P/S code is not identified in the procedure, but the process description matches the P/S code and the description in previous or later revisions of the same procedure.

Extrapolate out two (2) years beyond the last procedure to next possible review date.

The P/S code is not identified in the procedure, but the process description matches that of the P/S diagram or P/S code description.

Time period based on subject matter expert comments

PROCESS INPUTS AND OUTPUTS

P/S Code	P/S Title	Process Inputs		Process Outputs		EPA Codes[2]	References
		Feed Stream(s)	Chemicals/Reagents	Product	Waste Stream[1]		
AL	Ash Leach	Incinerator ash	Nitric acid Calcium fluoride Aluminum nitrate	Plutonium solutions	Leached solids Leaded gloves	D005, D006, D007, D008, *D008, D009, D011	N-28/TWCP-3566
AO	Americium Processing Calcination	Americium oxalate and hydroxide cakes	None (physical process)	Pure americium oxide	Americium oxide cakes Leaded gloves	D006, D007, D008, *D008, D009, D011	N-81/TWCP-3568
AP	Americium Purification	Americium in nitric acid solutions	Hydroxylamine nitrate Nitric acid Anion exchange resin	Purified americium solutions Plutonium solutions	Leaded gloves	D007, D008, *D008, D009	N-81/TWCP-3569
AS	Anode Heel Dissolution	Plutonium oxide	Nitric acid Hydrofluoric acid Calcium fluoride	Plutonium solutions Filtered solids	Leaded gloves	D006, D007, D008, *D008, D011	N-81/TWCP-3568
AT	Ash Testing	Incinerator ash	Anion exchange resin Sodium nitrite (20% solution) Ferrous sulfamate (20% solution) Nitric acid Calcium fluoride Silver nitrate (only used in a cold lab; not present in TRU waste)	Plutonium solutions Filtered solids	Filtered solids (< DL) Leaded gloves	D005, D006, D007, D008, *D008, D011	N-36/TWCP-3567

P/S Code	P/S Title	Process Inputs		Process Outputs		EPA Codes[2]	References
		Feed Stream(s)	Chemicals/Reagents	Product	Waste Stream[1]		
ATL	Advanced Test Line for Actinide Separations RD&D	Oxides Ash Chloride salts Metals Sand, slag, crucibles	Aluminum nitrate solution Calcium nitrate solution Calcium fluoride Hydrochloric acid Hydrofluoric acid Nitric acid Anion exchange resin Ascorbic acid Ferrous ammonium sulfate Hydrogen peroxide Hydroxylamine nitrate Sodium nitrite Urea Diethyl oxalate Formamide Formic acid Oxalic acid Sodium hydroxide Sulfuric acid	Plutonium oxide cakes	Residues Nitrate salt solutions Bottoms solutions Leaded gloves	D005, D006, D007, D008, *D008, D009, D011	N-20/TWCP-3566
BAC	Bacterial Decomposition of Cellulose Items	Cellulose rags (cheesecloth)	Bacteria	Solutions of glucose and other byproducts	Leaded gloves	*D008	N-81/TWCP-3568
BF	Unknown name for this code	Anode heel metal (plutonium oxide)	None (physical process)	Plutonium oxide	Leaded gloves	D006, D007, D008, *D008, D011	N-81/TWCP-3568
BL	Blending	Plutonium oxide	None (physical process)	Plutonium oxide	Leaded gloves	*D008	N-81/TWCP-3568
BM	Burning Metal	Plutonium oxide Plutonium metal	None (physical process)	Plutonium oxide	Leaded gloves	*D008	N-14/TWCP-3548

P/S Code	P/S Title	Process Inputs		Process Outputs		EPA Codes[2]	References
		Feed Stream(s)	Chemicals/Reagents	Product	Waste Stream[1]		
BU	Button Burning	Plutonium metal buttons; anode heels	None (physical process)	Plutonium oxide	Leaded gloves	D006, D007, D008, *D008, D011	N-81/TWCP-3568
CC	Calcination	Plutonium oxalate cakes	None (physical process)	Plutonium oxide	Leaded gloves	*D008	N-81/TWCP-3568
CD	Hydroxide Cake Dissolution	Hydroxide cakes (from chloride operations)	Hydrofluoric acid Nitric acid Aluminum nitrate Calcium fluoride	Plutonium in nitric acid solutions	Residues (< DL) Leaded gloves	D005, D006, D007, D008, *D008, D009, D011	N-32/TWCP-3566
CF	Cement Fixation	Aqueous analytical solutions Organic analytical solutions Evaporator bottoms Evaporator salts Fine particulate materials Oils Organic petroleum-based liquids Spent ion exchange resins Americium oxide Calcium chloride salts Chloride solutions Filter aid Glovebox sweepings Graphite powder HEPA filter media High-fired ash Leached ash residues Leached particulate solids	Cement accelerator Nitric acid Organic liquid emulsifier Silicon defoamer Sodium citrate retarder Sodium hydroxide pH 4 phthalate buffer solution pH 7 phosphate buffer solution Gypsum cement	Cemented TRU waste	Leaded gloves	D007, D008, *D008, D009, D011, D019, D021, D022, D039, F002, F003	N-1/TWCP-3548 N-67/TWCP-3568 N-68/TWCP-3568 N-69/TWCP-3568 N-70/TWCP-3568 N-71/TWCP-3568 N-72/TWCP-3568 N-73/TWCP-3568 N-74/TWCP-3568

P/S Code	P/S Title	Process Inputs		Process Outputs		EPA Codes[2]	References
		Feed Stream(s)	Chemicals/Reagents	Product	Waste Stream[1]		
CF (continued)		Passivated uranium carbide Plutonium/thorium fluoride filter cakes Plutonium/thorium hydroxide filter cakes Plutonium/uranium filings Pump oils Silica solids Trioctyl phosphine oxide (TOPO) and iodine in kerosene Uranium oxide					
CH	Characterization	Plutonium oxide	Nitrogen gas Viscous water-soluble liquid	Plutonium oxide	Plutonium oxide slurries Leaded gloves	*D008	N-81/TWCP-3568
COD	Chlorinated Oxide Dissolution	Chloride pyrochemical salts	Sodium hydroxide solution Nitric acid Hydrofluoric acid	Plutonium oxide cakes Plutonium solutions Plutonium residues	Caustic liquids Leaded gloves	*D008	N-81/TWCP-3568
COL	Chlorinated Oxide Leach	Chlorinated oxides Chloride pyrochemical salts	Sodium hydroxide solution	Plutonium oxide cakes (may contain barium)	Caustic liquids Leaded gloves	D005, *D008	N-81/TWCP-3568

P/S Code	P/S Title	Process Inputs		Process Outputs		EPA Codes[2]	References
		Feed Stream(s)	Chemicals/Reagents	Product	Waste Stream[1]		
CPOD	Catalyzed Electrochemical Plutonium Oxide Dissolver	Plutonium oxide Filter residues Glovebox sweepings Plastic	Nitric acid Silver nitrate Hydrochloric acid Ferric ammonium sulfate hydrate Potassium thiocyanate Calcium fluoride Sodium chloride Water Argon	Plutonium solutions	Electrolytic solutions Silver chloride residues Leaded gloves	*D008, D011	N-21/TWCP-3566
CR	Crushing and Pulverizing	Sand, slag, crucible residues Skull oxide Graphite Magnesium oxide Ash	None (physical process)	Crushed materials	Leaded gloves	*D008	N-17/TWCP-3548
DF	DS Furnace and Oxide Preparation	Plutonium oxalate cake	None (physical process)	Plutonium oxide	Leaded gloves	*D008	N-81/TWCP-3568
DP	Dry Processing	Polycubes (polyethylene with plutonium oxide)	None (physical process)	Crushed polycubes	Leaded gloves	*D008	N-81/TWCP-3568

P/S Code	P/S Title	Process Inputs		Process Outputs		EPA Codes[2]	References
		Feed Stream(s)	Chemicals/Reagents	Product	Waste Stream[1]		
DS	Ion Exchange	Plutonium in nitric acid	Anion exchange resin Aluminum nitrate Nitric acid Sodium nitrite Hydroxylamine nitrate Hydrogen peroxide (30%) Oxalic acid Hydrofluoric acid Sodium hydroxide Ferrous sulfamate Ferrous ammonium sulfate Urea Phenolphthalein in ethanol Potassium fluoride hydrate	Plutonium in nitric acid solutions Plutonium oxide	Acidic effluents and filtrate solutions Ion exchange resins Leaded gloves	D005, D006, D007, D008, *D008, D009, D011	N-45/TWCP-3567 N-51/TWCP-3567 N-59/TWCP-3567
ED	Cascade Dissolver	Magnesium oxide crucibles Plutonium oxide Oxidized metal, skulls, etc. Incinerator ash	Nitric acid Calcium fluoride Aluminum nitrate	Plutonium in nitric acid solutions	Crucible and metal residues Leaded gloves	D005, D006, D007, D008, *D008, D009, D011	N-23/TWCP-3566
ETD	Experimental Thermal Decomposition	Combustible residues	Argon gas	Plutonium oxide Ash	Water scrub solutions	D005, D006, D007, D008, *D008, D011	N-81/TWCP-3568
EV	Evaporator	Ion exchange solutions Nitrate salts Oxalate filtrates Nitric acid distillates Vacuum pump seal waters Negative-chilled waters	Nitric acid Formic acid	Plutonium in nitric acid solutions	Nitrate salts Distillate solutions Filtrate solutions Leaded gloves	D006, D007, D008, *D008, D009, D011	N-61/TWCP-3568 N-62/TWCP-3568 N-64/TWCP-3568

P/S Code	P/S Title	Process Inputs		Process Outputs		EPA Codes[2]	References
		Feed Stream(s)	Chemicals/Reagents	Product	Waste Stream[1]		
FA	Americium Processing	Americium/nitric acid solution	Oxalic acid Sodium oxalate	Americium oxalate cakes Americium oxalate solutions	Leaded gloves	*D008	N-81/TWCP-3568
FC	Canning	Plutonium oxide	None (physical process)	Plutonium oxide	Leaded gloves	*D008	N-81/TWCP-3568
FX	Cement to Drum	Cemented waste, evaporator bottoms	None (physical process)	None	Packaged cemented waste Leaded gloves	D006, D007, D008, *D008, D009, D011	N-81/TWCP-3568
GMS	Open Gradient Magnetic Separation	Magnesium oxide Graphite Sand, slag, and crucible residues Plutonium processing residues	None (physical process)	Plutonium-rich materials	Plutonium-lean materials (< DL) Leaded gloves	*D008	N-2/TWCP-3548
HC	Calcination	Plutonium oxalate cakes	Water vapor	Plutonium oxide	Leaded gloves	*D008	N-81/TWCP-3568
HCD	Hydroxide Cake Dissolution	Hydroxide cakes (from chloride operations)	Hydrofluoric acid Nitric acid Aluminum nitrate Calcium fluoride	Plutonium in nitric acid solutions	Residues (< DL) Leaded gloves	D005, D006, D007, D008, *D008, D009, D011	N-32/TWCP-3566
HD	Hydroxide Cake Dissolution	Hydroxide cakes (from chloride operations)	Hydrofluoric acid Nitric acid Aluminum nitrate Calcium fluoride	Plutonium in nitric acid solutions	Residues (< DL) Leaded gloves	D005, D006, D007, D008, *D008, D009, D011	N-32/TWCP-3566
HGMS	High Gradient Magnetic Separation	Soil and clay	Water	Plutonium residues	Plutonium residues (< DL)	D006, D007, D008, D009, D011	N-81/TWCP-3568

P/S Code	P/S Title	Process Inputs		Process Outputs		EPA Codes[2]	References
		Feed Stream(s)	Chemicals/Reagents	Product	Waste Stream[1]		
HP	Cement Fixation	Evaporator bottoms Vacuum pump oils Tributylphosphate and iodine in kerosene Analytical chemistry solutions Salts Leached filter paper residues Ash Miscellaneous solutions Americium oxide	Sodium hydroxide Portland cement Gypsum cement Surfactant (polyoxy-ethylene-20-sorbitan)		Cemented waste Leaded gloves	D007, D008, *D008, D009, D011, D019, D021, D022, D039, F002, F003	N-81/TWCP-3568
HRA	Hanford Reservation materials	Process residues from Hanford Reservation	Not specified	Recovered plutonium	Not specified	D004, D005, D006, D007, D008, *D008, D009, D010, D011	TWCP-5371
IA	Impure Americium Holding for Discard	Americium hydroxide cakes	None (no processing performed)	Americium hydroxide cake	Leaded gloves	D006, D007, D008, *D008, D009, D011	N-81/TWCP-3568
IS	Incinerator	Combustible materials (e.g., rags, paper wipes, wood) (less than 10% plastic and rubber)	Sodium hydroxide solution Potassium hydroxide solution	Scrubber solutions	Ash Scrubber solutions (< DL) Pump seal solutions Leaded gloves	D005, D006, D007, D008, *D008, D011	N-5/TWCP-3548
LC	Uranium/ Plutonium Processing	Plutonium oxide	Nitric acid Hydrofluoric acid Oxalic acid Sodium oxalate	Plutonium oxalate	Acidic solutions Uranium nitrate solutions Leaded gloves	*D008	N-81/TWCP-3568

P/S Code	P/S Title	Process Inputs		Process Outputs		EPA Codes[2]	References
		Feed Stream(s)	Chemicals/Reagents	Product	Waste Stream[1]		
LG1	Non Combustible Leach	Debris (metal, glass, plastic)	Nitric acid	Plutonium in nitric acid solutions	Leaded gloves	D006, D008, *D008	N-81/TWCP-3568
LG2	Hydroxide Cake Dissolution	Hydroxide cakes	Nitric acid	Plutonium in nitric acid solutions	Leaded gloves	D006, D007, D008, *D008, D009, D011	N-81/TWCP-3568
LR	Ion Exchange	Plutonium in nitric acid solutions	Ferrous ammonium sulfate Nitric acid Hydroxylamine nitrate Oxalic acid Aluminum nitrate Hydrofluoric acid Urea Anion exchange resin Sodium nitrite Hydrogen peroxide Ferrous sulfamate Phenolphthalein in ethanol Potassium fluoride hydrate	Plutonium in nitric acid solutions Plutonium oxide	Acidic effluents Acidic filtrate solutions Anion exchange resins Leaded gloves	D005, D006, D007, D008, *D008, D009, D011	N-42/TWCP-3567 N-45/TWCP-3567 N-51/TWCP-3567
MAG	Magnetic Separation	Magnesium oxide Graphite Sand, slag, and crucible residues Plutonium processing residues	None (physical process)	Plutonium-rich materials	Plutonium-lean materials (< DL) Leaded gloves	*D008	N-2/TWCP-3548
MAS	RD&D Experimental Process	Magnesium oxide Graphite Sand, slag, and crucible residues Plutonium processing residues	None (physical process)	Plutonium-rich materials	Plutonium-lean materials (< DL) Leaded gloves	*D008	N-2/TWCP-3548

P/S Code	P/S Title	Process Inputs		Process Outputs		EPA Codes[2]	References
		Feed Stream(s)	Chemicals/Reagents	Product	Waste Stream[1]		
MB	Nitric Dissolution of Molten Salts	Molten salt extraction salts	Hydrochloric acid Nitric acid	Plutonium solutions	Acidic solution Leaded gloves	*D008	N-81/TWCP-3568
MELL	Mediated Electro-Oxidation of Low Level Waste (LLW)	Cellulose-based materials	Nitric acid Cobalt nitrate Cerium nitrate Platinum anode Titanium anode Stainless steel cathode	Plutonium solutions Plutonium oxide	Plutonium oxide (< DL) Leaded gloves	D006, D007, D008, *D008, D009, D011	N-33/TWCP-3566
MF	Metals Furnace	Plutonium metal items	None (physical process)	Plutonium oxide	Leaded gloves	*D008	N-81/TWCP-3568
ML	Non-Plutonium Metal Leach	Metal equipment w/ Pu surface contamination	Nitric acid Calcium fluoride Hydrofluoric acid	Plutonium solutions	Metal equipment Leaded gloves	D006, D008 *D008	N-29/TWCP-3566
MPD	Cascade Dissolver	Plutonium oxide (salts or residues) Incinerator ash	Nitric acid Calcium fluoride Potassium hydroxide Sodium hydroxide Aluminum nitrate	Plutonium solutions	Plutonium residues (< DL) Leaded gloves	D005, D006, D007, D008, *D008, D009, D011	N-25/TWCP-3566
NC	Non-Combustible Leach	Noncombustible material w/ surface Pu contamination	Calcium fluoride Nitric acid Hydrofluoric acid Aluminum nitrate Argon	Plutonium solutions	Leached noncombustible solids Leaded gloves	D006, D008 *D008	N-31/TWCP-3566
NL	Non-Combustible Leach	Debris (metal, glass, plastic)	Nitric acid	Plutonium in nitric acid solutions	Residues (< DL) Leaded gloves	D006, D008 *D008	N-81/TWCP-3568
NR	Nitrate Recovery	None (not activated)	None	None	None	None	N-81/TWCP-3568

P/S Code	P/S Title	Process Inputs		Process Outputs		EPA Codes[2]	References
		Feed Stream(s)	Chemicals/Reagents	Product	Waste Stream[1]		
OD	Oxide Dissolution	Coarse oxides	Nitric acid Hydrofluoric acid Aluminum nitrate Calcium fluoride Argon	Plutonium in acidic solutions	Plutonium residues (< DL) Leaded gloves	D006, D007, D008, *D008	N-37A/TWCP-3567 N-81/TWCP-3568
OH	Hydroxide Precipitation	Americium hydroxide solutions from the FFTF and Breeder Oxide Production processes	Nitric acid Sodium Hydroxide	Americium solutions Plutonium solutions	Americium solutions (<DL) Leaded gloves	D006, D007, D008, *D008, D009, D011	N-55/TWCP-3567
OY	Oxalate Precipitation	Plutonium nitrate solution (eluate from anion exchange)	Oxalic acid Urea Hydroxylamine nitrate Nitric acid Aluminum nitrate solution	Plutonium oxalate cakes Plutonium oxide Plutonium solutions	Plutonium solutions (< DL) Leaded gloves	*D008	N-50/TWCP-3567
PA	Passivation	Glovebox sweepings, oxides containing unoxidized plutonium metal, carbides, and nitrides	None (physical process)	Plutonium oxide Passivated materials	Leaded gloves	*D008	N-81/TWCP-3568
PAF	Passivation Furnaces	Pyrophoric plutonium metal and alloys	Argon gas	Plutonium oxide	Leaded gloves	*D008	N-7/TWCP-3548
PR	Peroxide Precipitation	Oxide dissolution filtrate	Hydrogen peroxide Nitric acid Sulfuric acid Sodium hydroxide	Plutonium in nitric acid solutions	Leaded gloves	*D008	N-52/TWCP-3567
PS	Peroxide Precipitation of MSE Salts	Plutonium-containing nitric acid solutions	Hydrogen peroxide Nitric acid Sodium hydroxide solution	Plutonium in nitric acid solutions Americium oxalate cakes	Leaded gloves	*D008	N-81/TWCP-3568

P/S Code	P/S Title	Process Inputs		Process Outputs		EPA Codes[2]	References
		Feed Stream(s)	Chemicals/Reagents	Product	Waste Stream[1]		
PT	Plutonium/ Thorium Separation	Plutonium/thorium oxide residues	Nitric acid Nitrate-based ion exchange resin Sodium hydroxide Chloride-based ion exchange resin	Plutonium in nitric acid solutions	Caustic liquids Thorium-containing residues Leaded gloves	D007, *D008	N-81/TWCP-3568
PTS	RD&D Pretreatment Study	Variety of residue matrices, including ash	None (physical process)	None	Leaded gloves	D005, D006, D007, D008, *D008, D011	N-81/TWCP-3568
RB	Roasting and Blending	Plutonium oxide	None (physical process)	Plutonium oxide	Leaded gloves	D006, D007, *D008	N-57 N-57A N-57B (all in TWCP-3567)
RBJ	Roasting and Blending Jr	Plutonium oxide	None (physical process)	Plutonium oxide	Leaded gloves	D006, D007, *D008	N-57 N-57A N-57B (all in TWCP-3567)
RC	Rotary Calciner	Ash Graphite crucibles Uranium oxide	None (physical process)	Calcined ash	Leaded gloves	D005, D006, D007, D008, *D008, D011	N-81/TWCP-356
RCM	Rich Column Material Ion Exchange	Plutonium in nitric acid solutions	Anion exchange resin Aluminum nitrate Nitric acid Sodium nitrite Hydroxylamine nitrate Hydrogen peroxide Oxalic acid Hydrofluoric acid	Plutonium in nitric acid solutions Plutonium oxide	Acidic effluent solutions Filtrate solutions Leaded gloves	D005, D006, D007, *D008 D008, D009, D011	N-41/TWCP-3567 N-51/TWCP-3567

P/S Code	P/S Title	Process Inputs		Process Outputs		EPA Codes[2]	References
		Feed Stream(s)	Chemicals/Reagents	Product	Waste Stream[1]		
RFX	Ion Exchange	Plutonium in nitric acid solutions	Anion exchange resin Aluminum nitrate Nitric acid Hydroxylamine nitrate Hydrogen peroxide Oxalic acid Hydrofluoric acid Sodium Nitrite Sodium Hydroxide Phenolphthalein in ethanol Potassium fluoride hydrate	Plutonium in nitric acid solutions Plutonium oxide	Acidic effluents and filtrate solutions Ion exchange resins Leaded gloves	D005, D006, D007, *D008 D008, D009, D011	N-45/TWCP-3567 N-47/TWCP-3567
RO	Oil Recovery	Vacuum pump oils Contaminated organics	Trichloroethylene (used once in 1979)	Plutonium residues	Oils and organics on vermiculite Leaded gloves	D006, *D008, D040	N-81/TWCP-3568
RR	Ion Exchange	Plutonium in nitric acid solutions	Anion exchange resin Aluminum nitrate Nitric acid Sodium nitrite Hydroxylamine nitrate Hydrogen peroxide Oxalic acid Hydrofluoric acid	Plutonium in nitric acid solutions Plutonium oxide	Acidic effluents and filtrate solutions Ion exchange resins Leaded gloves	D005, D006, D007, D008, *D008, D009, D011	N-43/TWCP-3567 N-51/TWCP-3567 N-59/TWCP-3567
SC	Cascade Dissolver, G437	Sand, slag, and crucible residues Ash Magnesium oxide crucibles	Potassium hydroxide Sodium hydroxide Nitric acid Aluminum nitrate Calcium fluoride Hydrofluoric acid	Plutonium in nitric acid solutions Plutonium oxide residues	Alkaline scrubber solutions Residues (< DL) Leaded gloves	D005, D006, D007, D008, *D008, D009, D011	N-24/TWCP-3566

P/S Code	P/S Title	Process Inputs		Process Outputs		EPA Codes[2]	References
		Feed Stream(s)	Chemicals/Reagents	Product	Waste Stream[1]		
SP	Scrap Dissolution, G438	Filter residues Glovebox sweepings Coarse oxides	Nitric acid Hydrofluoric acid Aluminum nitrate Calcium fluoride Argon	Plutonium oxide residues Plutonium filtrate solutions	Acidic scrubber solutions Residues (<DL) Leaded gloves	D006, D007, D008, *D008	N-37/TWCP-3567 N-37A/TWCP-3567
SSD	Special Scrap Dissolution	Miscellaneous oxide scrap items	Nitric acid Hydrofluoric acid	Plutonium in nitric acid solutions	Residues Leaded gloves	D006, D007, D008, *D008	N-81/TWCP-3568
SX	Americium Processing Silicon Removal	Americium-containing hydroxide cakes	Nitric acid	Americium solutions	Silica gels Leaded gloves	*D008	N-81/TWCP-3568
TDC	Thermal Decomposition of Cellulose Items R&D	Cellulose items	Potassium hydroxide Argon Filter Aid	Plutonium solutions Plutonium residue Ash	Caustic scrubber solutions Plutonium solutions (<DL) Leaded gloves	D005, D006, D007, D008, *D008, D011	N-6/TWCP-3548 N-12/TWCP-3548
UPS	Uranium/ Plutonium Separation	Uranium-plutonium oxide mixtures	Aluminum nitrate Nitric acid	Plutonium oxide	Uranium wash and filtrate solutions Leaded gloves	*D008	N-19/TWCP-3566
US	Uranium Separation for Solid Solution Feed	Calcined solid solutions containing uranium or plutonium oxide	Nitric acid Oxalic acid Sodium oxalate	Plutonium oxide	Acidic uranium solutions Leaded gloves	*D008	N-81/TWCP-3568
US2	Uranium Separation for Non-Solid Solution Feed	Plutonium/uranium oxide	Nitric acid	Plutonium oxide	Acidic uranium solutions Leaded gloves	*D008	N-81/TWCP-3568
VC	Variable CSMO Scrap Dissolution	Miscellaneous oxide scrap items	Nitric acid Hydrofluoric acid	Plutonium nitrate solutions	Residues (< DL) Leaded gloves	D006, D008, *D008	N-81/TWCP-3568

P/S Code	P/S Title	Process Inputs		Process Outputs		EPA Codes[2]	References
		Feed Stream(s)	Chemicals/Reagents	Product	Waste Stream[1]		
VP1	CSMO Scrap Dissolution	Plutonium/aluminum alloy	Nitric acid Mercuric nitrate (catalyst) Sodium hydroxide Oxalic acid Sodium oxalate	Plutonium oxide cakes Plutonium oxalate solutions	Aluminum metal pieces Aluminum nitrate sludge Leaded gloves	*D008, D009	N-81/TWCP-3568
VP2	Polycube Processing	Skins and fragments of polycubes	None (physical process)	Plutonium oxide	Polystyrene breakdown products (oils) Vacuum pump oil Leaded gloves	*D008	N-81/TWCP-3568
VP3	Hydroxide Precipitation	Oxalate solutions	Sodium hydroxide	Plutonium hydroxide cakes	Caustic waste Hydroxide cakes (< DL) Leaded gloves	*D008, D009, D011	N-81/TWCP-3568
VUL	Vessel Unloading	Vessels	WD-40 Vacuum grease Silicon adhesive Pneumatic tool oil	Vessels Residues	Metal and wire debris Leaded gloves	D005, D008, *D008	N-9/TWCP-3548
ZD	Scrap Oxide Dissolution	Scrap and impure plutonium oxide	Nitric acid Hydrofluoric acid	Plutonium oxide Plutonium solutions	Leaded gloves	*D008	N-81/TWCP-3568

[1]All P/S codes generate routine laboratory debris waste. For those P/S codes that generate only debris waste, this column is left blank. The debris waste may consist of glassware, plastics, ceramic materials, paper, rags, HEPA filters, metal containers, brushes, and small tools.

[2]The EPA hazardous waste codes listed apply to the solid TRU waste only and not to any other waste forms that may undergo further treatment or processing (e.g., evaporation or cement fixation) before becoming the final waste form to be shipped to the WIPP. The resulting treated waste stream in its final waste form is evaluated for hazardous waste constituents and assigned the applicable EPA hazardous waste codes at that time. All P/S codes have the potential to generate leaded gloves. See discussion in sections 3.6.1 and 4.2 for the disposition of these gloves.

*D008 due to leaded gloves

GENERALIZED PROCESS STATUS DIAGRAM FOR NITRATE PROCESSES

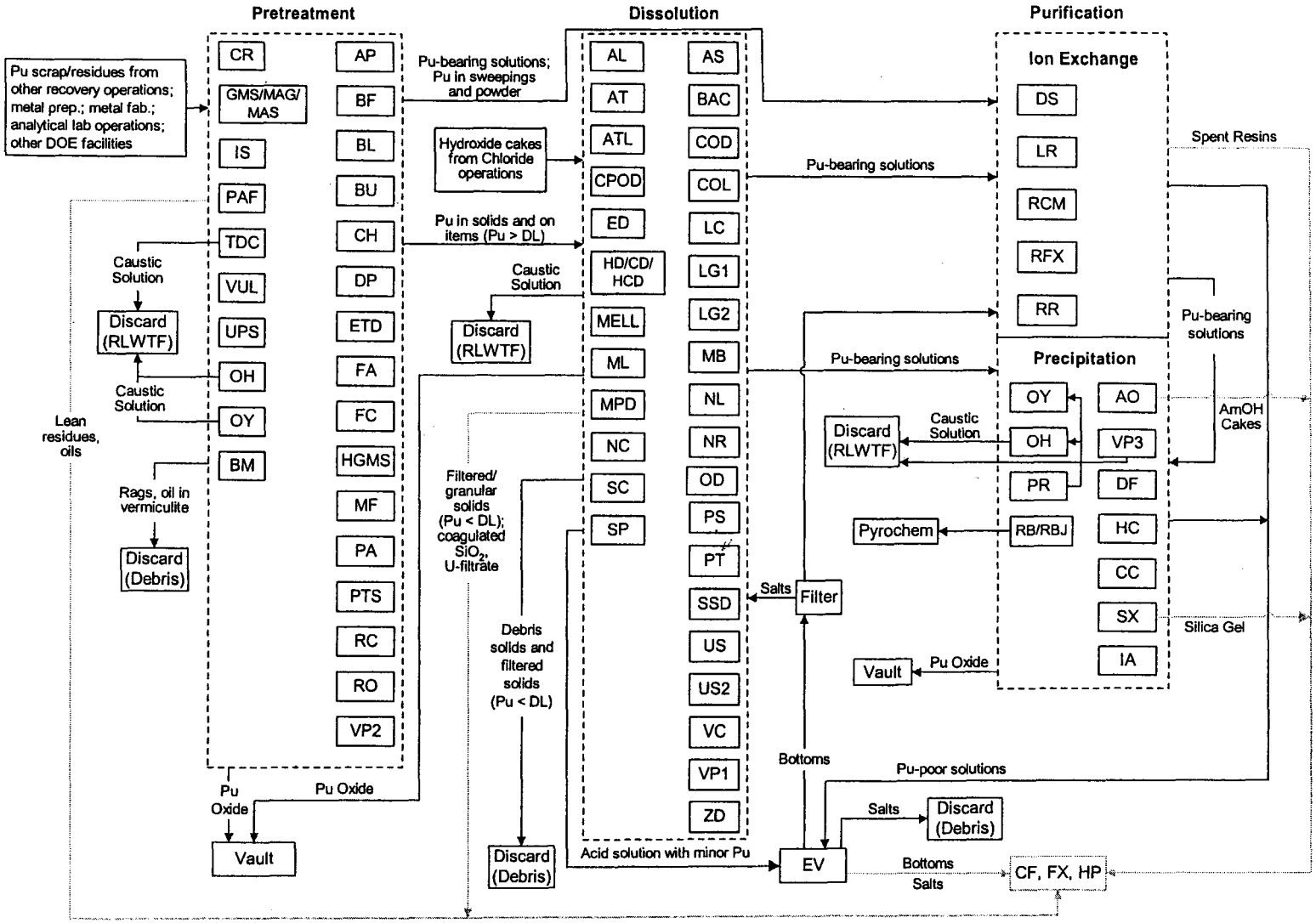

Decision/Discrepancies Resolution Documentation
TA-55 Nitrate Operations

Item Identification*	AK No. 1	Source No. 1	AK No. 2	Source No. 2	Decision/Discrepancy	Rationale**
HRA	Waste codes D004 and D010 are also applicable to this P/S code	TWCP-5371	Process report does not address D004 or D010	Summary report	Discrepancy between report and interview	C—SME indicated add D004 and D010 to timeline pre 1984. After 1984, no D004 or D010 per SME. See attached meeting notes attached.
CF	Process report lists D006 as a HWN	Process report	Per Jim Foxx, does not indicate D006	TWCP-3567	Process report indicates D006 due to other information	B—SME provided analytical information. Submit data as a record. See attached meeting notes.
RO	Page change indicates that no RCRA organic were formed in the process and no RCRA metals were introduced into the process.	TWCP-4100	AK process report lists D006, D008, and D040 These sources indicate toluene and styrene are possible contaminants	TWCP-3568/N-83, TWCP-3548/N-10, N-18.	Process report lists the HWN to be conservative	A—SME said to add these codes to be conservative. Possible contamination from pump oils used in process. See attached meeting notes.
AL	Per Jim Foxx, Ag (D011) not above regulatory limits	TWCP4167	Process reports list D011	Process Report	Reported D011	B—cannot locate analytical data. Applying D011 to be conservative. See attached meeting notes.

Item Identification*	AK No. 1	Source No. 1	AK No. 2	Source No. 2	Decision/Discrepancy	Rationale**
IS and CF	Indicates possibility of Cm-244 in ash produced by the IS operation. After 1988, interview suggests Cm-244 could be present in CF from evaporator bottoms	TWCP-5165	Process report does not indicate Cm-244	Process report	Process report does not indicate Cm-244.	B—SME wants Cm-244 added to report as it is important to NDA measurements. Submit email to records. See attached email.
All	TA-55 waste was defense related based on other interviews and budget	TWCP-614	Commingling of defense and non-defense, segregation after 1997 and 1998. Estimated to be 80/20, defense/non-defense for Pu.-239 and 50/50 for Pu-238 processing	TWCP—887, TWCP-4162	Summary report states commingling and segregation timeline.	C—Memo dated 8/27/98 says segregation begun. See attached meeting notes. TWCP-4167

Sandy Wander — AK Investigator — Sandy Wander — 2/25/02
Evaluator (Print Name) — Title — Signature — Date

P Rogers — Pamela Rogers — 2/26/02
SPM Review (Print Name) — Signature — Date

* Item identification can be PS Code, waste stream, drum ID, item ID, or other identification of items affected.
** Rationale code: [A=Professional Judgment; B=Most Conservative Decision; C=Other (Specify)]

Source: TWCP-07910

CCP Records Transmittal/Receiving Form

CCP Central Records/Records Custodian, 4021 National Parks HIghway - MS: GSA 203, Carlsbad, New Mexico 88220

Telephone Number: 505-234-7523, 505-234-7233, 505-234-7617
Fax Number: 505-234-7014

☒ Original Record
☐ Faxed Record

Attn:	Records Custodian	From:	Trey Greenwood
Ship to:	CCP Central Records/ CCP Records Custodian	Site:	Los Alamos National Laboratory
	4021 National Parks Highway - MS GSA 203	Company:	Technical Specialists
	Carlsbad, NM 88220	Telephone Number:	505-302-6000
		Date Sent:	11/23/04
Telephone Number:	505-234-7523		

Document Number	Title/Description	Record Date	Total Pages
D036	Attachment 3 - Acceptable Knowledge Source Document Summary for CCP-AK-LANL-6	9/17/2004	1
	TA-55 Plutonium Facility Acceptable Knowledge Report, Nitrate Operations	5/17/2001	117
	N/A		

Comments
None

CCP Records Center
Acceptance/Rejection Signature and Date

Records Accepted ☒ Susan Keathley Susan Keathley 2/14/05
Signature Printed Name Date

Records Rejected ☐ _____ _____ _____
Signature Printed Name Date

Reason for Rejection: _____

Re-submittal: _____ _____ _____
Signature Printed Name Date

DIVIDER PAGE ONLY

Not part of page count

Attachment 2 - CCP Records Transmittal/Receiving Form

CCP Central Records / Records Custodian, 4021 National Parks Highway - MS: GSA 203, Carlsbad, New Mexico 88220

Telephone Number: 505-234-7523

Fax Number: 505-234-7014

- [x] Original Record
- [ ] Fax Record
- [ ] E-mail Record

Attn:	Sheila Pearcy	From:	Amy Johns
Ship to:	CCP Central Records/ CCP Records Custodian 4021 National Parks Highway - MS GSA 203, Carlsbad, NM 88220	Site:	Los Alamos National Laboratory, CCP-AK-LANL-006
		Company:	Technical Specialists, LLC
		Telephone Number:	505-302-8669
Telephone Number:	505-234-7523	Date Sent:	1/26/2009

D036	Attachment 3 - Acceptable Knowledge Source Document Summary for CCP-AK-LANL-6	1/14/2009	2
	NA		

Please supercede existing Attachment 3.

Acceptance/Rejection Signature and Date

Records Accepted [x] Sonia Gonzalez (Signature) SONIA GONZALEZ (Printed Name) 02.17.09 (Date)

Records Rejected [ ] Signature Printed Name Date

Reason for Rejection:

N/A

Re-submittal: Signature Printed Name Date

HP LaserJet *M2727nf MFP*

Fax Confirmation Report

HP LASERJET FAX

Feb-18-2009 8:55AM

Job	Date	Time	Type	Identification	Duration	Pages	Result
5138	2/18/2009	8:54:39AM	Send	96283238	0:32	1	OK

Controlled Copy

CCP-QP-008, Rev. 14 **Effective Date: 09/19/2007**
CCP Records Management **Page 29 of 29**

Attachment 2 - CCP Records Transmittal/Receiving Form

CCP Central Records / Records Custodian, 4021 National Parks Highway - MS: GSA 203, Carlsbad, New Mexico 88220
Telephone Number: 505-234-7523
Fax Number: 505-234-7014

☒ Original Record
☐ Fax Record
☐ E-mail Record

Attn:	Sheila Pearcy	From:	Amy Johns
Ship to:	CCP Central Records/ CCP Records Custodian	Site:	Los Alamos National Laboratory, CCP-AK-LANL-006
	4021 National Parks Highway - MS GSA	Company:	Technical Specialists, LLC
	203, Carlsbad, NM 88220	Telephone Number:	505-302-8669
Telephone Number:	505-234-7523	Date Sent:	1/26/2009

D036	Attachment 3 - Acceptable Knowledge Source Document Summary for CCP-AK-LAN,-6	1/14/2009	2
	NA		

Please supercede existing Attachment 3.

Acceptance/Rejection Signature and Date

	Signature	Printed Name	Date
Records Accepted ☑	Sonia Gonzalez	SONIA GONZALEZ	02-17-09
Records Rejected ☐			

Reason for Rejection:

N/A

Re-submittal: Signature Printed Name Date

TWCP-352

RECORDS SUBMITTAL

LA-UR-004835

LA-11069-MS

INSTRUCTIONS: This form is prepared by the record source when submitting records or a records package to the RMDC. This form can be used for submitting either individual records or records packages. Indicate the type of record below. For records packages, a Table of Contents (TOC) must be submitted. Each record submitted requires a form.

RECORD SOURCE (Submitted By):

Name: Organization: Date:

E-mail:

TYPE OF

This form is generated from the Records Management Database. Records that have this submittal form have the unique identifier (BAR CODE) on the first page of the record.

(This sheet is for indexing purposes and record separation.)

_____ Revision of existing Record _____ Addition to a Records Package (TOC)

Record ID Number: _____ Package Identifier _____

RECORD ID NUMBER (e.g., memo symbol number, procedure number (be sure to include the revision if applicable): REFERENCE MATERIAL

RECORD DATE: 03/15/1997

RECORD TITLE OR SUBJECT:
WASTES FROM PLUTONIUM CONVERSION AND SCRAP RECOVERY OPERATIONS

PAGE COUNT: (Total number of pages + cover) 50

WBS Number:

RETURN FORM TO RMDC, MS E517

RECORD CENTER USE ONLY

_____ ACCEPTED _____ RETURN

Date Accepted: _____ Resubmittal Date: _____

_____ Complete

Signature: _____

SCANNED

LA-11069-MS

TWCP-352

UC-10
Issued: March 1988

LA-UR-004835

Wastes from Plutonium Conversion and Scrap Recovery Operations

D. C. Christensen
D. F. Bowersox
B. J. McKerley
K. L. Nance

LOS ALAMOS NATL. LAB. LIBS
3 9338 00115 8954

Los Alamos National Laboratory
Los Alamos, New Mexico 87545

TABLE OF CONTENTS

Abstract 1

I. Introduction 1

II. Definitions and Characterization of Recoverable Materials 4

A. Processing Concerns 4

1. Safeguards 4

2. Accountability 4

3. Criticality Safety 5

4. Radiation Exposure 5

5. Summary 5

B. Economic Discard Limit (EDL) 6

C. Levels of Recovery 8

D. Assay of Scrap 10

1. Destructive Techniques 10

2. Nondestructive Techniques 11

a. Alpha Counters 11

b. Neutron Counters 11

c. Gamma-Ray Measurements 12

d. Calorimetry 13

e. Other NDA Techniques 14

3. Summary 14

III. Products Recovery and Utilization 15

A. Primary Treatment Approaches 15

1. Head End Operations 15

2. Separation and Purification By Precipitations 28

a. Plutonium(III) Oxalate 29

b. Plutonium(IV) Oxalate 29

c. Plutonium Peroxide 32

d. Plutonium Hydroxide 34

e. Plutonium Fluoride 34

f. Disposal of Oxalate and Peroxide Filtrates 35

3. Nitrate Anion Exchange 35
a. Valence and Feed Adjustment 38
b. Loading 40
c. Washing 40
d. Elution 41
4. Chloride Operations 42
B. Metal Preparation 48
1. Fluorides 48
2. Oxides 50
3. Chlorides 51
4. Hydriding 52
5. Pyroredox 52
C. Metal Purification 53
1. Metal Production Line (MPL) 54
2. Direct Oxide Reduction (DOR) 57
3. Molten Salt Extraction (MSE) 61
4. Vacuum Melting and Casting 63
5. Electrorefining (ER) 66
IV. Waste Management 75
A. Liquid Wastes 76
B. Solid Wastes 78
1. Process Residues 78
2. Combustibles and Noncombustibles 80
V. Emerging Technologies 81
Acknowledgements 86
References 87

Printed in the United States of America
Available from
National Technical Information Service
US Department of Commerce
5285 Port Royal Road
Springfield, VA 22161

Microfiche (A01)

Page Range	NTIS Price Code	Page Range	NTIS Price Code	Page Range	NTIS Price Code	Page Range	NTIS Price Code
001-025	A02	151-175	A08	301-325	A14	451-475	A20
026-050	A03	176-200	A09	326-350	A15	476-500	A21
051-075	A04	201-225	A10	351-375	A16	501-525	A22
076-100	A05	226-250	A11	376-400	A17	526-550	A23
101-125	A06	251-275	A12	401-425	A18	551-575	A24
126-150	A07	276-300	A13	426-450	A19	576-600	A25
						601-up*	A99

*Contact NTIS for a price quote.

LOS ALAMOS
REPORT LIBRARY
FEB 23 1993
RECEIVED

Los Alamos National Laboratory
Los Alamos, New Mexico 87545

WASTES FROM PLUTONIUM CONVERSION AND SCRAP RECOVERY OPERATIONS

by

D. C. Christensen, D. F. Bowersox, B. J. McKerley, and R. L. Nance

ABSTRACT

This report deals with the handling of defense-related wastes associated with plutonium processing. It first defines the different waste categories along with the techniques used to assess waste content. It then discusses the various treatment approaches used in recovering plutonium from scrap. Next, it addresses the various waste management approaches necessary to handle all wastes. Finally, there is a discussion of some future areas for processing with emphasis on waste reduction.

I. INTRODUCTION

Although very small quantities of plutonium exist in nature, it is essentially a manmade element produced in uranium-fueled power reactors. It is element number 94 and is a member of the actinide series. Researchers have identified isotopes ranging in mass from 232 through 246, all of which are radioactive. The most abundant isotope, and therefore the most important, is ^{239}Pu.

Since its discovery by G. T. Seaborg and coworkers in 1940, an immense amount of research into the physical and chemical properties of the element has taken place. Scientists now know more about the chemistry and metallurgy of plutonium than they know about many of the more common elements. The chemistry and metallurgy are complex because plutonium exists in six allotropic phases and forms compounds in five different valence states. These complex properties both aid and hinder the handling and processing of plutonium. The separation of plutonium from other

elements generally depends on the ability to control the oxidation state and to adjust it at will.

In the national defense complex, plutonium is first produced in production reactors. It is then extracted by solvent-extraction techniques and concentrated as a liquid plutonium nitrate. The nitrate is then converted to either an oxide or a fluoride and reduced to metal. The resulting product metal is sent for fabrication of various parts and components. It is this fabrication process that generates the major portion of waste and scrap.

Generation of nonspecification plutonium and plutonium-containing residues occurs in all phases of the production and recycle of components and in the chemical processing of scrap residues to recover that plutonium. The recovery of this scrap and the recycle of plutonium is the charter of the residue-processing facilities. Recovery of the plutonium from these residues is essential for a number of reasons. The plutonium is expensive to produce in the reactors. The scrap is not amenable to waste disposal because of scrap matrix, intrinsic radiation, and plutonium content. The scrap therefore must be stored in certified storage vaults, a costly process. Finally, the plutonium is a fissile material that requires extensive safeguards procedures to insure that the material is maintained in a secure environment. It is much easier and therefore much less costly to safeguard material in high-density and easily measured forms such as high-purity metals and oxides.

Plutonium-containing scrap can conveniently be divided into two categories. The first, primary scrap, is scrap that occurs in the plutonium foundry and results from the casting, alloying, forging, and machining of the metal. Another component of primary scrap is items that are removed from service and must be reprocessed. The primary scrap category includes graphite from molds, fused salts from extractive metallurgy, plutonium oxide from burned casting and machining residues, impure plutonium metal, and a small amount of equipment and supplies such as cleaning rags, dry-box gloves, and dry-box windows.

Secondary scrap, the second category of scrap, results from the processing of the primary scrap items. The ultimate goal for processing scrap is to return the plutonium to a usable form as quickly and efficiently as possible. Unfortunately, plutonium is an outstanding getter and exhibits a propensity to oxidize in an oxygen environment. These characteristics, together with the fact that plutonium readily forms compounds in five different valence states, make the task of efficient separation and recovery a challenging one. The processing of impure metals and oxides generates a wide variety of leaner scrap forms including ash, undissolved oxide heels, metal reduction slags and salts, ceramics, sludges, chloride salts, and miscellaneous items. These items constitute secondary scrap. They are characteristically leaner in plutonium content and more difficult to process.

A number of facilities have been established to recover both primary and secondary scrap. The technology used in these facilities ranges from 1950s vintage processes up to state-of-the-art methods. Much of this technology was designed into the facilities just before commissioning and has not undergone much renovation. Most facilities are now undergoing new capital construction, and management realizes the need to update the technology to improve process efficiency, reduce scrap generation, reduce waste generation, reduce radiation exposure to workers, improve accountability and safeguards, and improve cost efficiency. Future facilities will take advantage of improved process-control technologies, automation and robotics, and on-line or at-line analytical capabilities. In addition, waste management will play an ever-increasing role in dictating how plutonium residues will be handled and processed.

This report first defines how residues/wastes from plutonium conversion are classified and then discusses the state of technology for residue-processing methods. (We do not intend the discussion to be a comprehensive treatise on residue processing, but rather a summary of proven techniques. References, where appropriate, allow the reader to quickly find more detailed information on a particular subject.) Next, we

review current waste-treatment techniques and conclude with a statement on the potential of emerging technologies.

II. DEFINITIONS AND CHARACTERIZATION OF RECOVERABLE MATERIALS

A. Processing Concerns

Any chemical processing system seeks to provide a high-quality product while generating a minimum quantity of sidestream material. The sidestream quite often contains a concentration of reactants as well as a concentration of the product. It also quite often is made up of more than one type of item. Almost always, economic considerations determine if this sidestream warrants further processing or whether discard is appropriate. The criteria for determining the economics include the cost of recovery of materials, waste disposal including transportation, the value of reactants and products, and social or political consequences (social risk).

Although most plutonium facilities use this same approach in evaluating the disposition of sidestreams in plutonium processing, there are significant differences that add to the costs. These differences include additional costs for safeguards, accountability, criticality safety, and protection from radiation exposure.

1. Safeguards. Because plutonium is a fissile material, facilities must provide safeguards to insure limited access to the material. Safeguards are also important when material leaves facilities in transit to processing sites. Safeguards includes all physical and mechanical barriers, guard forces to insure active response, and security-awareness training and certification.

2. Accountability. Because plutonium is a fissile material, facilities must account for it in much the same way banks account for money. The variety of plutonium isotopes, each having different radioactive properties and different masses, causes the biggest accountability problem. Many isotopes exist in a homogeneous mixture in

each plutonium-containing item. The techniques used for accountability include physical-property measurements (weight and density), radioactive-property measurements (neutron counts and gamma scans), and chemical-property measurements. None of these are exact sciences. Accountability is therefore a technique of using the best approach available to arrive at a close estimate of the quantity of plutonium in each item.

3. Criticality Safety. Some isotopes of plutonium undergo spontaneous fission and therefore pose a hazard because of small critical masses. Process equipment is designed to prevent assembly of a critical mass if the equipment or process undergoes an upset. For this reason, many processes are designed with limited flow rates, limited reactor dimensions (small sizes), and/or limited batch sizes. Economics of scale, realized by large chemical-processing plants, are rarely transferable to plutonium processing facilities. These considerations directly affect processing costs.

4. Radiation Exposure. Plutonium emits alpha particles, neutrons, and gamma rays. These forms of radiation can be damaging to biological tissue if the exposure time and intensity of the radiation are sufficient. Alpha radiation is a nonpenetrating form of radiation and is generally eliminated by the glove-box operations. On the other hand, shielding can moderate neutron and gamma radiation but not completely eliminate it under normal working environments. All plutonium facilities observe personnel radiation-exposure guidelines deemed to be safe. To comply with these guidelines, facilities quite often need additional shielding. In areas of particularly high radiation exposure, personnel are often rotated among jobs so that one employee does not receive an excessive level of exposure. Both of these activities add cost to the operations. An additional burden to the operations is the constant monitoring required to assess radiation exposure levels.

5. Summary. These four items do not constitute a comprehensive list of challenges to the plutonium-processing industry, but they are major examples of unique cost impacts. The costs associated with these processing concerns are generally hidden within the direct operating costs

because they are, indeed, considered necessary to perform the direct operation. These unique costs, therefore, are incorporated into the cost of plutonium recovery and become part of the considerations in deciding the disposition of sidestreams.

B. Economic Discard Limit (EDL)

The result of calculations that take into account all costs of plutonium handling is the economic discard limit (EDL),[1] a level of plutonium concentration above which recovery would be economical. In other words, the EDL represents the plutonium concentrations at which recovery costs would equal the value of the recovered plutonium. The procedure for calculating EDL values is easily derived from the following definition:

Value of Plutonium Recovered Metal	≥	Head-End Recovery Costs	-	Avoided Waste Mgt Costs	+	New Waste Mgt Costs	+	Metal Conversion Costs .

Substitution of costs in the above expression and rearrangement of the terms yield the following relationship for the EDL:

$$EDL = \frac{C_r + C_w(1-f)}{(V - C_c)Y} , \qquad (1)$$

where

EDL = economic discard limit, concentration of plutonium in the residue or scrap material (g Pu/kg bulk),

C_r = unit cost of recovering plutonium from bulk and converting it to a concentrated nitrate or oxide ($/kg bulk),

C_w = total waste management cost of initial bulk residue, including packaging, storage, and shipping ($/kg),

f = ratio of the quantity of new waste (after processing) to original bulk,

V = value of plutonium ($/g),

C_c = cost of converting purified plutonium concentrate as oxide or nitrate to spec-grade metal ($/g Pu), and

Y = yield, or fraction of plutonium in original residue converted to spec-grade metal (includes immediate recycle but not secondary recoveries).

Two important terms emerge from the use of this calculation: scrap and waste. Scrap is that material having a plutonium concentration above the EDL value for that matrix and is therefore material that will undergo further processing for plutonium recovery. (Often the terms scrap and residue are used interchangeably to define recoverable material.) Waste, on the other hand, is that material having a plutonium concentration below the EDL value for that matrix and is therefore destined for disposal.

The operating costs used to derive the unit-cost terms include all direct and indirect costs related to the recovery operations such as direct labor, indirect labor, materials and supplies, technical and engineering support, health protection, and analytical/standard laboratories. Also included are shared or distributed building costs such as building maintenance and utilities.

The term V in the equation above represents the value of plutonium. In reality, it represents the cost of producing and recovering virgin plutonium from production reactors and converting it to usable metal. Historically, the value of plutonium and the cost of recovery (C_r) have been the predominant factors in determining the EDL. More recently, the costs associated with waste management (C_w) have become more significant. Indeed, they will likely become the dominant aspect in determing EDLs in the future.

Waste-management costs also include direct labor, indirect labor, materials, supplies, technical and engineering support, health protection, analytical/standard laboratories, and building maintenance and utilities. Other indirect charges include packaging, certification, storage, shipment, and final disposal including monitoring. At present, the only site

certified for receipt of plutonium-contaminated waste is the Waste Isolation Pilot Plant (WIPP) in Carlsbad, New Mexico. The facility has developed an extensive waste acceptance criteria (WAC) for defining such things as packaging, radiation levels, material content, reactivity, and particle size.

The Department of Energy (DOE) provides the following official definition of transuranic (TRU waste):[2]

> TRU Waste. Without regard to source or form, radioactive waste that at the end of institutional control periods is contaminated with alpha-emitting transuranium radionuclides with half-lives greater than 20 years and concentrations greater than 100 nCi/g. Regarding the Waste Isolation Pilot Plant, high-level waste and spent nuclear fuel as defined by this Order are specifically excluded by this definition.

C. Levels of Recovery

The EDL now becomes the criteria for defining the level of recovery for scrap items. Scrap, unfortunately, exists as a large number of different items and in a large variety of matrices. To simplify the evaluation of scrap items, researchers have developed a list of categories and have clustered scrap items using categorical criteria. The initial criteria segregate material into three major catagories: High-Level, Major Low-Level, and Other Low-Level.

The High-Level category encompasses high-plutonium-concentration items that can be processed quickly and inexpensively. Items in this category generically include oxides and impure metals in which plutonium concentrations are generally above 80%.

The Major Low-Level category encompasses items that involve moderate turnaround times, routine processing sequences, and well-established and routine techniques. These items are almost exclusively processed by aqueous dissolution and purification, although in some instances high-

temperature extractive metallurgical techniques offer acceptable alternatives. Items in this category generically include reduction slags and salts, impure oxides, and ash.

The Other Low-Level category encompasses items that are not routinely processed, items that are not produced in high enough volumes to justify routine processing, and items that require special handling. They generally have very low plutonium concentrations and, because of their unusual nature, are somewhat more expensive to process than items in the Major Low-Level category. Items in this category include ceramic crucibles, graphite, combustibles, and insulation.

Unfortunately, breaking the plutonium scrap into these three categories does not sufficiently allow definition of recovery cost or assessment of a proper EDL value for these items. There are simply too many different techniques used to recover items in each broad category to accurately assess recovery costs. Therefore, to further facilitate the analysis of recovery cost, the specific materials commonly processed for plutonium recovery are further broken into the following 24 higher-order categories:

<u>Low-Level Scrap</u>

1.	Graphite	
2.	Combustibles	
3.	Incinerator Ash	(Major Low-Level)
4.	Oxide Heels	(Major Low-Level)
5.	Reduction Slags	(Major Low-Level)
6.	Insulation	
7.	Ceramics	
8.	Scrap Metal (Iron, Plutonium)	
9.	Glass	
10.	Rubber	
11.	Sludge	
12.	Chloride-Based Salts	
	a. Extractive Metallurgy	(Major Low-Level)
	b. Electrolyte	(Major Low-Level)
	c. Solvent	
13.	Pu/U Mixtures	
14.	Pu/Th Mixtures	
15.	Pu/Be Mixtures	
16.	Pu/Np Mixtures	
17.	Pu/Zr Mixtures	
18.	Pu/Al Mixtures	

High-Level Scrap

19. Impure Metal
    a. Nonspecification Metal
    b. Anode Heels
20. Rich Plutonium Oxide (>85%)
21. Lean Plutonium Oxide (<85%)

The materials within each of the 24 categories have similar properties and require basically the same processing steps for plutonium recovery. We can therefore measure the cost of recovery and calculate an independent EDL for each category.

D. Assay of Scrap

The application of the EDL is straightforward. The units associated with the EDL are grams of plutonium per kilogram of bulk weight. When a discrete scrap item is generated, the operator must assay the scrap and measure the concentration of plutonium.[3] There are a variety of satisfactory techniques for determining the plutonium concentration, but all fall within two categories: destructive and nondestructive.

1. Destructive Techniques. Destructive techniques involve taking representative samples from the scrap matrix and performing detailed chemical analysis. Plutonium assay, for instance, involves dissolving the sample in hydrochloric acid (HCl), reducing it with a lead reductant, rinsing it, titrating it with cerium(IV), and detecting the end point potentiometrically. Each sample requires that a reagent blank be run in parallel to compensate for reagent interference. The reliability varies with the quality of the feed sample but can be accurate to within 0.05%. Certain elements, including iron, molybdenum, titanium, uranium, tungsten, vanadium, and chrome, interfere with the reliability of the analysis and can cause serious deviations in results if the analyst does not compensate for them.

Another very important destructive technique is the determination of different plutonium isotopes by mass spectrometry. This process involves sample dissolution in HCl, ion exchange, elution, and rinsing. The analyst then injects the sample into the mass spectrometer, which shows the distribution of isotopes within the sample. This analysis is important because of its use in conjunction with the various nondestructive techniques for providing quantitative analysis.

2. Nondestructive Techniques. Nondestructive assay (NDA) techniques used in assaying plutonium-bearing scrap include alpha counters, neutron counters, gamma scans, and calorimetry. All techniques used for nuclear-material assay must be calibrated with appropriate and approved reference standards. All calibration standards should be traceable to the appropriate National Measurement System standards.

a. Alpha Counters. Alpha spectrometry is an isotope-specific rather than element-specific analytical method that is particularly well-suited to measuring low plutonium concentrations in waste streams. The method also has been applied to the determination of plutonium in dissolver solutions following such processes as solvent extraction. Quantitative alpha-particle spectrometry is based on measurement of the alpha-radiation intensity of the sample. The major problem is that alpha particle energy interactions with electrons rapidly degrade and are completely attenuated by as little as 5 cm of air. Attenuation by water and self-absorption are even more rapid. Analysts perform normal alpha spectrometry on thin, dry films using standard alpha detectors such as proportional, scintillation, and solid-state counters.

b. Neutron Counters. NDA techniques using neutron counting are either passive or active. Passive assay uses naturally occurring neutrons as direct elemental or isotopic signatures. Active assay involves irradiating the sample with neutrons or photons to induce nuclear or electronic interactions in the sample matrix. The resulting neutrons are interpreted to determine the amount of the desired element present.

Neutrons from plutonium samples arise from either (α,n) reactions or fission. The (α,n) neutrons result from the alpha decay of plutonium and the subsequent action of the alpha particles on light elements in the sample matrix. The neutron yield is a function of alpha-particle energy, the (α,n) cross sections of the matrix elements, and the matrix configuration. Furthermore, the alpha-particle intensity depends on the isotopic composition and is particularly sensitive to ^{238}Pu content. As a consequence, (α,n) neutrons ordinarily are not useful as a quantitative signature for plutonium, and, in fact, they usually constitute a large background that must be eliminated from most measurements.

Fission neutrons result from spontaneous fission or from fissions induced by an external neutron source such as ^{252}Cf. Because the fission process produces more than one neutron per fission, coincidence counting can differentiate fission neutrons from (α,n) neutrons.

With passive neutron methods, analysts can measure both spontaneous fission and (α,n) neutrons. The (α,n) neutron yield is sensitive to the light-element content, particularly fluoride. Using coincidence-counting techniques can make this method specific for spontaneous fission neutrons, but some sensitivity will be lost.

c. Gamma-Ray Measurements. Passive gamma-ray techniques benefit conventional materials accounting of uranium and plutonium because investigators can use these emission techniques to quantify any ^{235}U and ^{239}Pu contained in the solid low-level waste generated by reprocessing and conversion operations.

For assay of ^{235}U and ^{239}Pu contained in 55-gal. drums of low-level waste, analysts measure the 186-keV and 414-keV lines, respectively. A drum scanner that uses a sodium iodide (NaI) detector to measure the 414-keV gamma ray from ^{239}Pu can detect ~1 g of ^{239}Pu in a 5-min scan; a lithium-drifted germanium (GE[Li]) detector can provide much higher resolution. The relative accuracy for measuring >10 g of ^{239}Pu can be as good as 10% in matrices of low atomic number and ranges to 50% in unknown

matrices. Hence, the measurement accuracy depends largely on the administrative control exercised in sorting waste to ensure reproducible matrices.

In addition to NaI and Ge(Li) detectors, intrinsic germanium detectors also provide gamma-ray measurements. The Ge(Li) and intrinsic germanium detectors provide much better energy resolution for adjacent peaks, but they require liquid-nitrogen cooling. Nevertheless, one or the other is required if good quantitative data on isotopic abundances are to be obtained. Because it is a rugged on-line instrument, investigators prefer the NaI detector if overlapping spectra are not a problem.

d. Calorimetry. Plutonium calorimetry is an NDA technique based on measuring heat generated by the radioactive decay of plutonium and americium. All but a negligible part of the decay energy is transformed into heat when the sample and calorimeter walls absorb the decay particles and rays (alpha, beta, and low-energy gamma). In plutonium from processed reactor fuels, the energy from alpha decay predominates, and the energy release from ^{238}Pu, the plutonium isotope with the highest specific activity, is dominant.

The calorimetric method consists essentially of measuring the electrical energy needed to duplicate or balance the rate of heat emission (power) from the sample. A thermal resistance separates the heat source (standard or unknown sample) in the calorimeter chamber from a constant-temperature environment (heat sink). In steady-state operation, establishing a constant temperature difference between the calorimeter chamber and the surrounding environment determines equilibrium; the thermal energy transferred to the environment must equal that generated in the calorimeter chamber.

Calorimetry is applicable to the assay of materials such as oxide powder or metals that have high plutonium concentrations. An analyst can determine the total power of a sample without subsampling or aliquoting, permitting assay of sealed containers of material. Furthermore,

calorimetry is relatively insensitive to the geometry and matrix effects that are major concerns in many other NDA methods.

Calorimetry is both precise and accurate. In spite of potential sources of error, the precision of a plutonium assay by calorimetry, expressed in terms of relative standard deviation (RSD), typically is 0.5% or better. However, because the design and construction of a calorimeter depend on the magnitude of the sample power, the physical size of the sample, and the type of radiation emitted, a universal calorimeter for all measurement is neither practical nor economical.

e. Other NDA Techniques. Other NDA techniques, not elaborated on here, include balances and densitometers. Naturally, these types of equipment require regular calibration verification. They are frequently used for confirmation measurements in concert with other analytical techniques but in some cases are used as the primary means of accounting for plutonium.

3. Summary. Evaluating the variety of techniques for determining the plutonium content of a scrap item makes obvious the fact that no one technique can be used in all cases. In fact, investigators generally use two or more techniques to assay every discrete item. No single technique is absolute, and a certain margin of variability exists with each technique. These are crucial points in evaluation processing parameters, operational safety, and, in particular, criticality safety.

The way that material is categorized together with the assay techniques represents the basis for designing recovery techniques. Processing approaches are designed around the feed matrices. The desired end product and ways to minimize waste are also crucial considerations. Operating constraints including criticality, radiation exposure, and batch sizes further help to design the processing approach. The following sections further discuss the various approaches used in recovering plutonium from different scrap matrices.

III. PRODUCTS RECOVERY AND UTILIZATION

A. Primary Treatment Approaches

The processing technology for plutonium is especially interesting and challenging because of the many scrap matrices, the wide range of chemical contaminants, and the stringent health, safety, and materials accountability requirements employed in the nuclear industry. In addition, plutonium possesses the unique chemical property that allows the simultaneous existence in solution of the III, IV, V, and VI oxidation states. To make the situation even more challenging, there is a relatively small oxidation potential difference between each state. This multiplicity of states and plutonium's ability to form complexes in the III and IV states provide the foundation for the separation and purification of the plutonium from other elements.

Plutonium solution-processing technology is composed of unit operations that can be conveniently divided into four main categories:

- head-end operations,
- separation and purification by precipitation,
- nitrate anion exchange, and
- chloride operations.

Processes must provide the flexibility to handle extremely low level combustible and noncombustible scrap such as cheesecloth, glove-box gloves, and high-efficiency particulate air (HEPA) filters; chloride-based residues such as direct oxide reduction (DOR) and electrorefining (ER) salts; and residues such as impure oxides and impure plutonium metal containing high percentages of plutonium.

1. Head-End Operations. The principal unit operations involved in this area of plutonium processing include incineration, leaching of noncombustibles, conversion of pyrophoric metal and compounds to stable oxides, and dissolution.

Plutonium-recovery cost depends upon the plutonium concentration in the residues to be processed and upon the matrix material involved. The more dilute the plutonium is, the more nonradioactive material has to be processed to obtain a given amount of plutonium. The ratio of the weight of the nonradioactive material to the weight of plutonium is often significantly greater in solid residues, such as rags, than in feed solutions. Recovering plutonium from solution by solvent-extraction, ion-exchange, or precipitation techniques can be quite easy. Unfortunately, no single method now exists that will scavenge the plutonium from solid materials.

Incineration, the preferred method for cellulosics such as rags and paper (Fig. 1), reduces the original volume of dry rags by approximately one order of magnitude. Because completely burning rubber and plastics is difficult and because burning polyvinyl chloride (PVC) liberates corrosive HCl, researchers developed an alternate processing method that involves pickling compatible plastics such as PVC and polypropylene in boiling nitric acid (HNO_3) and fluoride ion (F^-)[4,5] (Fig. 2). However, some sites prefer to burn rubber and plastics in an oxygen-fed incinerator constructed with a stainless steel shell lined with fire brick. For reasons explained on page 21, experts do not recommend incineration of leaded glove-box gloves that have been exposed to HNO_3 for extended periods.

Depending upon feed material, the incinerator operates between 200°C and 900°C. When the incinerator burns cellulosic material such as paper and cheesecloth, lower temperatures are sufficient. However, more complete combustion of plastics and rubber occurs only at higher temperatures. This high-temperature incineration tends to create refractory oxides of plutonium that are significantly more difficult to leach from the resultant incinerator ash.

A pretreatment calcination step ameliorates the potential difficulties in processing incinerator ash from the combustion of rubber and plastics. At Los Alamos, this operation uses rotary calciners to remove incompletely oxidized organic material from the incineration of materials such as

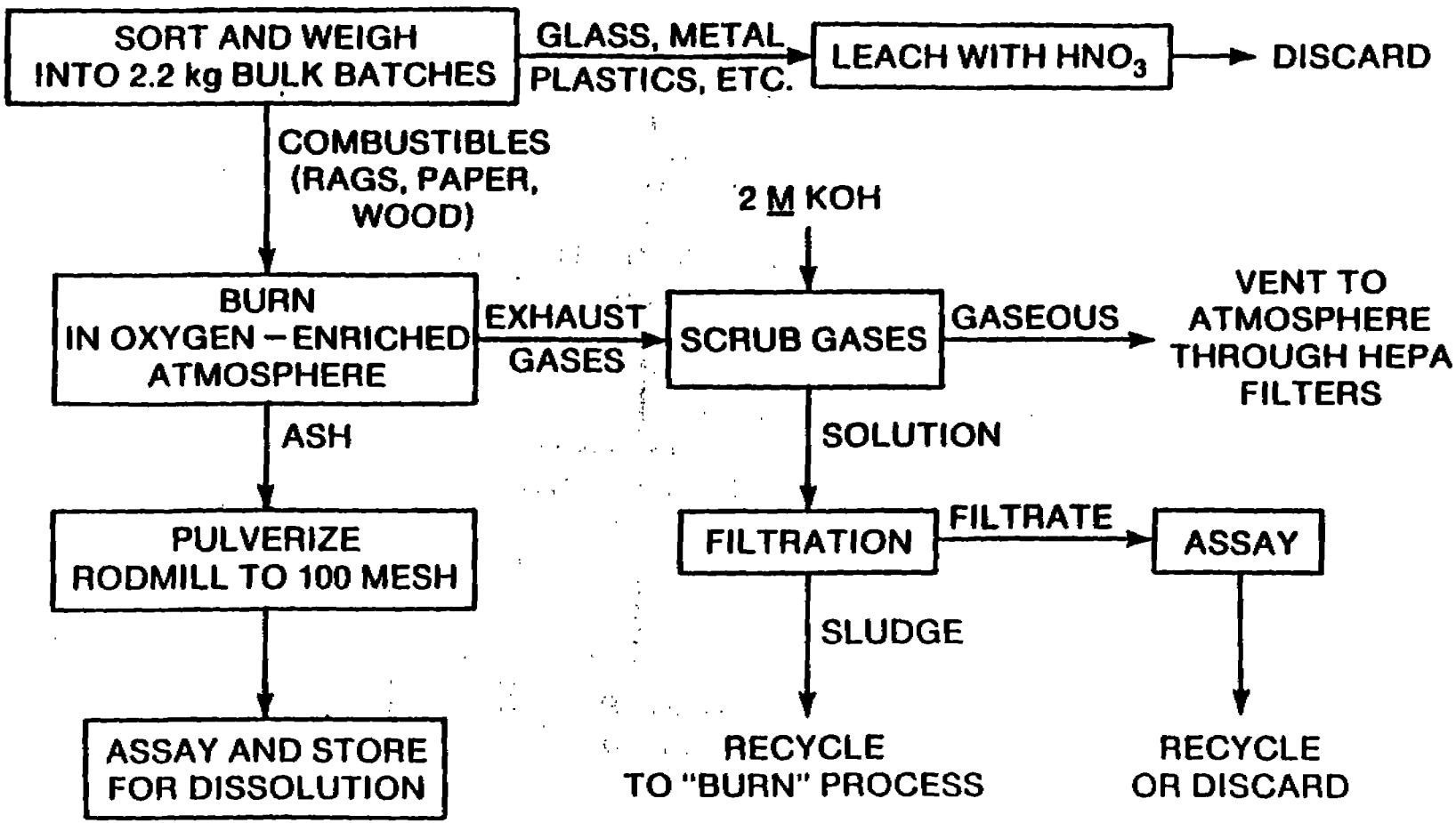

Fig. 1. Incineration of nongraphite combustibles.

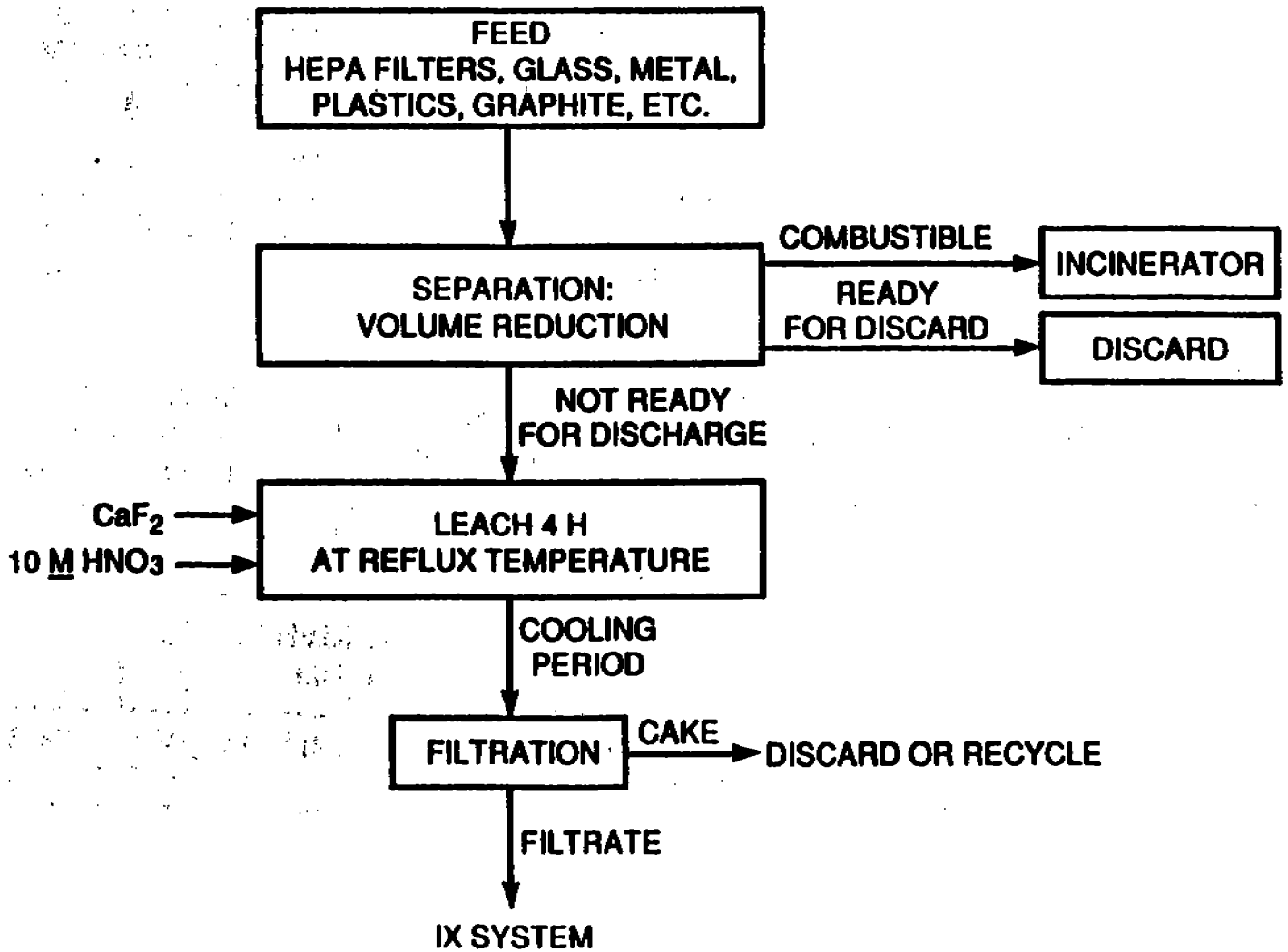

Fig. 2. Noncombustible leaching process.

plastics, rubber, wood, cellulose, and oil (Fig. 3). This calcination step requires the flow of pure oxygen for a length of time and at a temperature (550°C) that will result in almost total oxidation of the organic materials.[6] A rotary calciner consists of a stainless steel tube encased in large resistance heaters and containing the material that is being calcined. A rotating paddle inserted in the calcination tube keeps the material agitated so that the ash particles will be evenly exposed to oxygen and heat and will burn more completely. Agitation also prevents both localized overheating because of combustion and the subsequent melting of the ash to form chunks. This pretreatment process is quite advantageous for the following reasons:

- Organic materials sometimes react vigorously and foam when treated with strong HNO_3.
- Emulsions that impede filtration may form when HNO_3 reacts with the organic material.
- These viscous residues also coat the ash-leaching equipment, gloves, and glove box, resulting in severe housekeeping problems.
- Some of the organic materials dissolve in the HNO_3 to yield a dark solution that in turn severely discolors the ion-exchange resin.
- Organic materials impede the dissolution process. Consequently, following their removal, leaching operations require less HNO_3.

Graphite molds used in foundry operations generate graphite residues. The general process for plutonium recovery from these residues includes pretreatment, multiple leaching, and purification. Pretreatment includes the mechanical removal of the surface of the graphite containing most of the plutonium. The remaining graphite is usually sufficiently decontaminated to be discarded. The accumulated scrapings become candidate material for leaching in HNO_3 and F^- until the leached residue meets discard limits. Experience has shown that 50% to 90% of the plutonium becomes soluble during each leaching operation and that four passes are sufficient. The graphite scrapings may also be burned in an oxygen atmosphere and the residue from this operation treated as an impure oxide.[4] Rubber and plastics, as mentioned earlier, can be classified as either

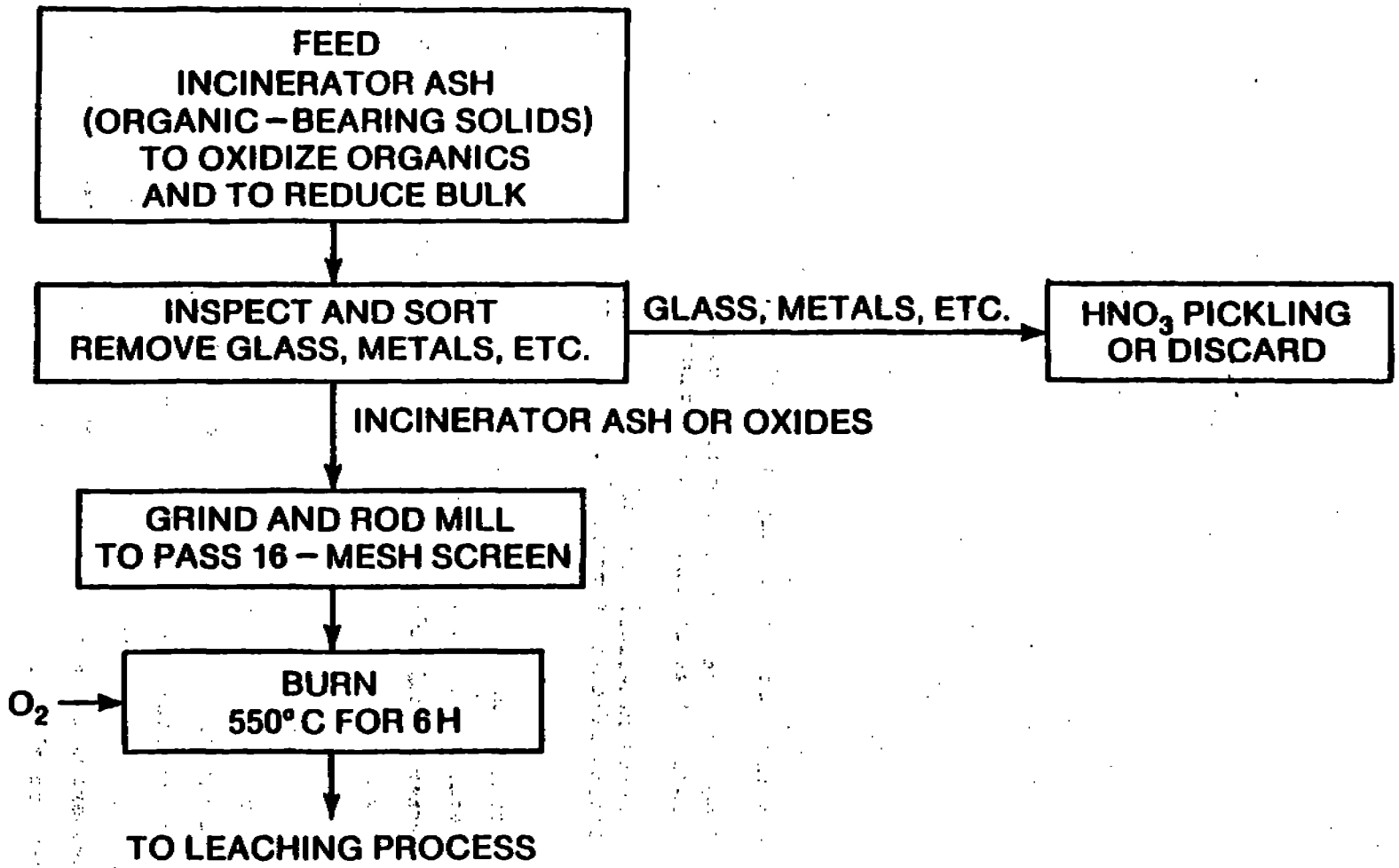

Fig. 3. Rotary calciner.

combustible or noncombustible. If these materials are treated as noncombustibles, wiping the surface with HNO_3 and F^- frequently provides decontamination. Wiping is particularly effective on items that have been generated a short time before processing. Older, stored materials require more drastic processing techniques, including leaching in boiling HNO_3 and F^- (Fig. 2). Monitoring the material and removing hot spots can reduce the volume of material to be leached.

Long and Smith[7] report that an explosive material, identified as a mixture of carboxylic acids containing nitro groups and lead nitrate, was formed when leaded glove-box gloves were exposed to HNO_3 and then dried. The time required for the nitration reaction depended upon the area of leaded layer exposed, the temperature, and acid concentration. One hour was sufficient when the leaded layer was in contact with hot, concentrated HNO_3 (15.7M). Approximately two weeks were required when operators used Hypalon* or neoprene to separate the leaded layer from 7M acid at room temperature. The diffusion of HNO_3 through the protective surface limited the rate of reaction, but the action of HNO_3 vapors on the leaded layer also contributed to the reaction. Soaking the explosive material in water at 95°C for 15 min yielded a nonexplosive solid and a liquid. The liquid could safely be evaported to dryness and safely decomposed by heat.

Glove-box operations and R&D projects routinely generate nonplutonium scrap metal. Washing or leaching this material in HNO_3 and F^- (Fig. 2) is a relatively easy decontamination method. Several techniques allow for the removal of gross quantities of plutonium that have been deposited on metallic scrap. Hydriding converts plutonium metal to a plutonium hydride that can be easily removed from the base material. The plutonium can also be oxidized, or in some cases compounds can be thermally decomposed. Abrasion of the metallic surfaces may also remove the contamination. Dissolution or leaching of these plutonium-bearing products makes the plutonium soluble. Researchers are also testing techniques such as

* E.I. du Pont de Nemours & Co., Wilmington, DE 19898.

vibratory polishing, electropolishing of stainless steel, and electrolytic dissolution for possible use on these residues.

Plutonium-processing facilities generate contaminated glass residues, including materials such as Raschig rings, glove-box windows, and processing equipment. The leaching process for these materials uses HNO_3 and hydrofluoric acid (HF) or calcium difluoride (CaF_2) (Fig. 2). Several leachings might be necessary to achieve a glass residue that may be discarded. A potential hazard in processing glass residues is the presence of glass shards that can easily penetrate gloves and injure the operator.

HEPA filters are another type of material widely used in the plutonium-processing facilities. After the filters have reached their filtering capacity, they may be discarded or, if they contain concentrations above the discard limit, they must be processed. The general steps in treating this type of material include disassembling the filters, leaching the filter media in refluxing HNO_3 and F^- (Fig. 2), and discarding the residues. The frames that house the filtering media may usually by discarded without processing.

Some production facilities use the generic term sludge to designate material that has settled to the bottom of solution-storage tanks or other process vessels. The precipitate found in most waste and process streams may also be referred to as sludge. Depending upon the nature and source of the residue, facilities may treat this material by washing, leaching, or dissolution in HNO_3 plus HF or CaF_2.

Sand, slag, and crucibles are the residues from the calcium reduction of plutonium tetrafluoride (PuF_4) to form plutonium metal. The sand and crucible materials are magnesium oxide (MgO), which may contain a silicon dioxide binder, and slag, which is principally a mixture of CaF_2 and minor amounts of calcium oxide (CaO). Sand, slag, and crucibles from some sites contain large amounts of calcium iodide, which operators add before the initiation of the reduction step to boost the reaction temperature and allow the reaction to go to completion. Careful sorting of this material

may allow discard of low-level plutonium residues. Material requiring further processing is sent to a pretreatment operation where a crusher/pulverizer converts it to a powder. This step allows an auger feeder to add the material to the first stage of a 6-in. cascade dissolution system.[8,9] Technicians add pulverized sand, slag, and crucible, HNO_3, and aluminum nitrate [$Al(NO_3)_3 \cdot 9H_2O$] concurrently to the first dissolver, and air-lift mixing provides for adequate solid/liquid contact (Figs. 4 and 5). An immersion steam loop heats the material to about 90°C. The solution cascades through the second and third stages before filtration. The small heel remaining after dissolution is usually combined with the next feed material. The off-gas from this process passes through a condenser and is then scrubbed in caustic solution to neutralize the volatilized iodine and to retard the corrosion of process equipment. After filtration, the solution is processed by solvent extraction or ion exchange. Several facilities also use pot dissolvers and slab dissolvers in the dissolution step.

Ceramics is another category of scrap generated in pyrochemical operations and analytical chemistry. Pyrochemical processes, including DOR and ER, use magnesia crucibles. Analytical chemistry employs LECO crucibles in the determination of carbon in plutonium dioxide (PuO_2), a procedure that results in a refractory PuO_2 imbedded in the crucible. The magnesia crucibles from Ca/PuF_4 reductions may be processed in the same manner as sand, slag, and crucibles, or the crucible pieces may be pickled in HCl. The LECO crucibles are a particularly intractable residue, and no one has yet developed a suitable process to recover the plutonium from this category of material.

We have already described dissolution in HNO_3 for sand, slag, crucibles, and incinerator ash and HNO_3 pickling of extraneous materials. High-percentage plutonium in oxide is normally dissolved with 10-16M HNO_3 and 0.05-0.4M F^- from HF or a fluoride salt such as CaF_2 (Fig. 6). At Los

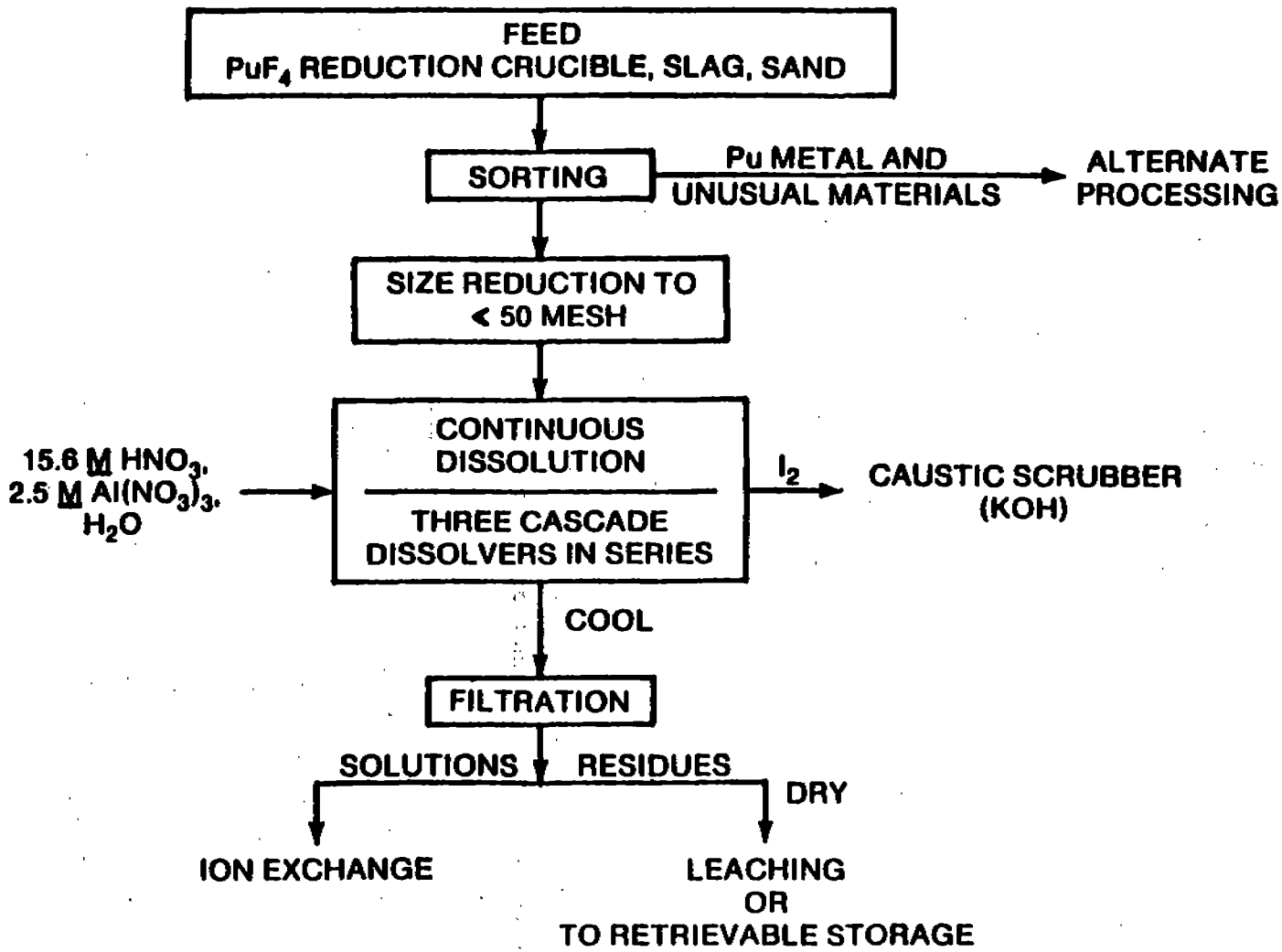

Fig. 4. Slag and crucible dissolution.

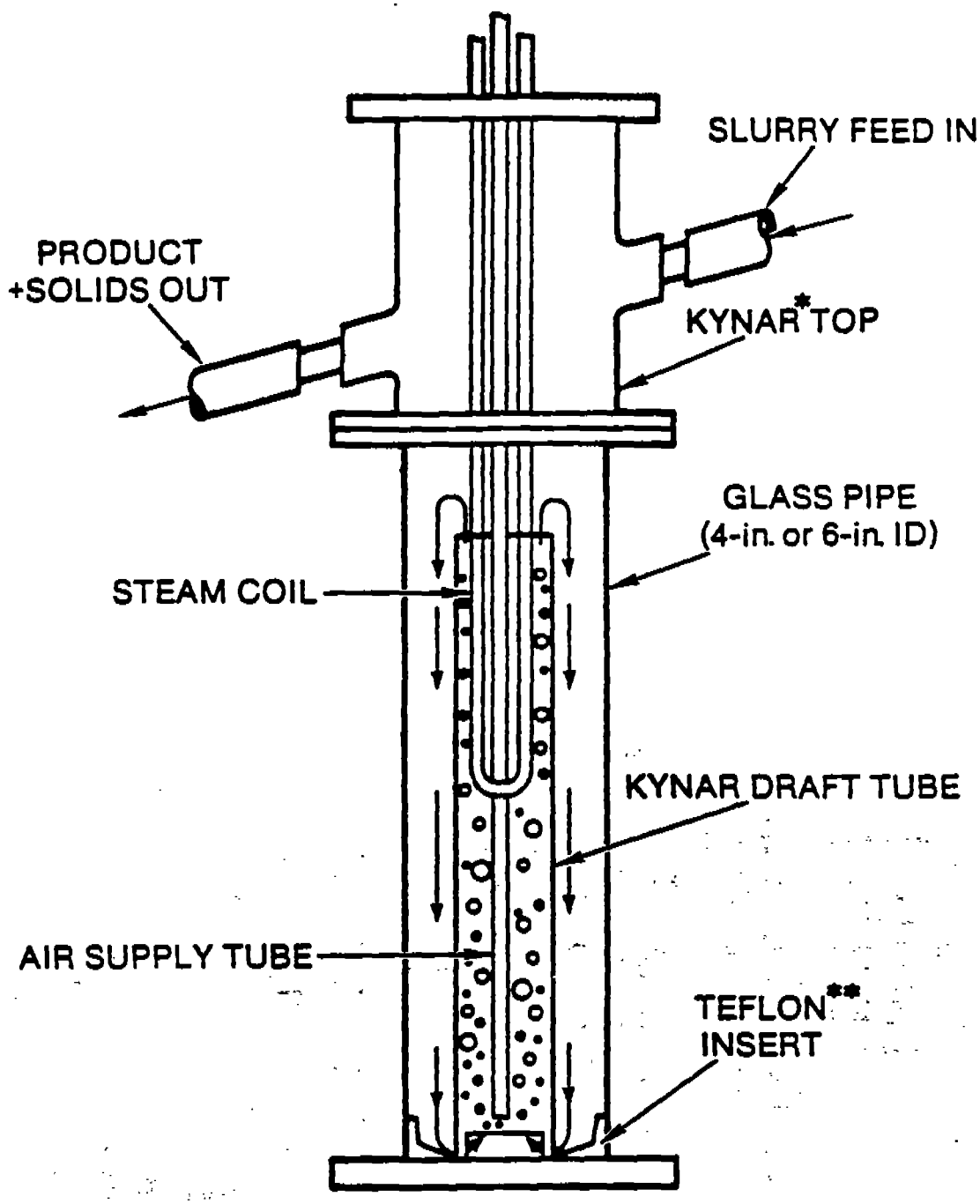

Fig. 5. Operating principle of 4-in. and 6-in. cascade dissolvers. (Normal operation requires three dissolvers in series.)

* Pennsalt Chemicals Corp., 3 Penn Center, Philadelphia, PA 19102.
** E. I. du Pont de Nemours Co., Wilmington, DE 19898.

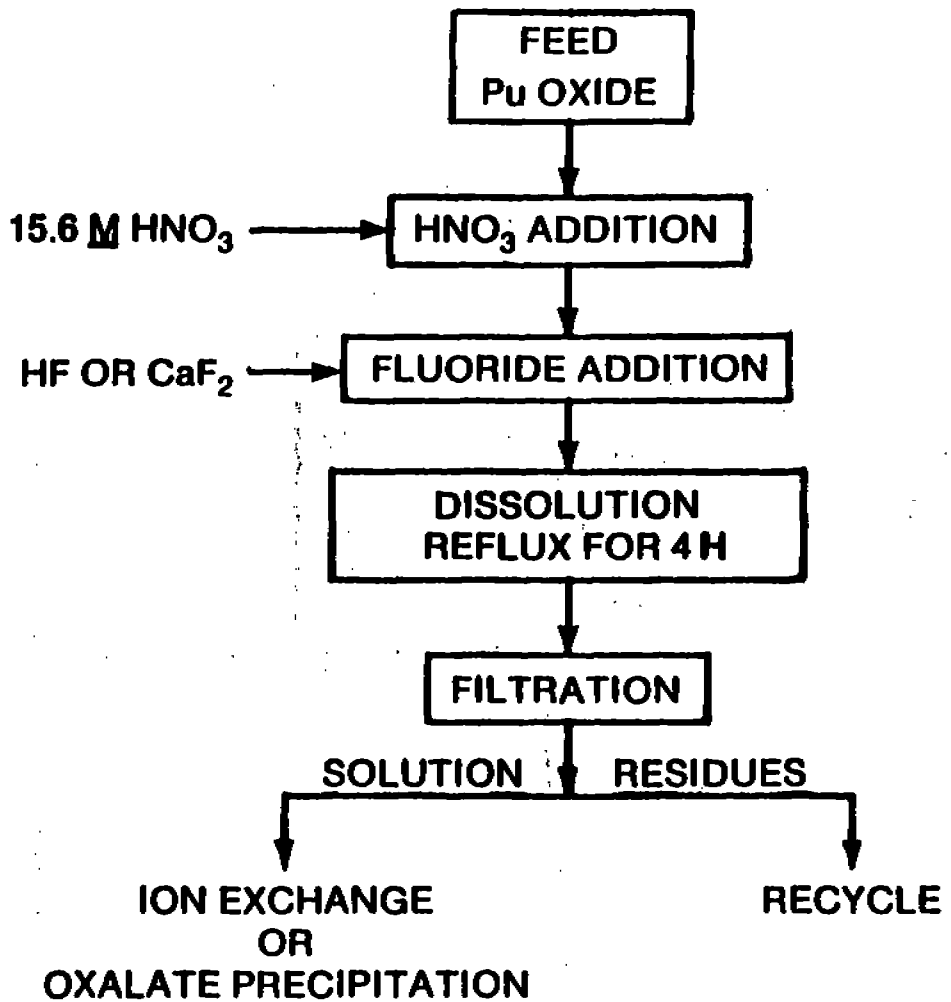

Fig. 6. Dissolution of PuO_2.

Alamos, traditional dissolutions, dating from the early 1950s,[4] involved the spherical 5-ℓ Pyrex* dissolution vessel with heating mantle, sparge inlet, and reflux or distillation condenser. Although the earlier system was convenient for special lots of material, a more efficient method utilizes the 4-in. cascade dissolution system, which is a scaled-down version of the 6-in. system described earlier (Fig. 5). Rocky Flats Plant (RFP) developed the cascade dissolvers, which were recently installed, tested, and put into routine use at Los Alamos National Laboratory. Advantages include higher efficiency, a higher rate or production, and lower plutonium(VI) content in the product.

Heels, a particularly prolific category of residue, are the undissolved residue of a feedstock after one or more leaching/dissolving cycles. The original feedstock may have been PuO_2, incinerator ash, impure metal, blasting grit, or nitrate salts. Generally, heels are repeatedly leached in HNO_3 plus HF or CaF_2. The usual method of processing permits the addition of fresh feed material to the heels to make the repeated leachings more efficient.

PuO_2 that has been subjected to high temperatures is a very refractory material and is difficult to dissolve by normal techniques. Oxides that have been heated to less than 600°C are usually easier to dissolve than are oxides heated to temperatures between 600°C and 1000°C. Oxides that have been fired at temperatures greater than 1000°C require more extreme dissolution measures.[4] Researchers often cite the ability of refluxing HNO_3/HF to dissolve PuO_2[10,11]; however, the high-temperature oxide dissolves only very slowly in this acid mixture. Bjorkland and Staritzky[12] found an increase in the refractive index of PuO_2 prepared from plutonium(III) or plutonium(IV) oxalate as the ignition temperature increased. Experimental results indicate that perfection of the originally

* Corning Glass Works, Corning, NY 14832.

In the following sections we describe some of the more important precipitations and the disposal of their filtrates.

a. Plutonium(III) Oxalate. Since the early days of the Manhattan Project, researchers have found it advantageous to produce large-particle-size precipitate by reducing plutonium to the III state and precipitating $Pu_2(C_2O_4)_3 \cdot 10H_2O$[4,18,19] (Fig. 7) by the controlled addition of aqueous oxalic acid ($H_2C_2O_4$). Solid $H_2C_2O_4$ will produce a smaller-particle-size precipitate. The typical precipitate filters readily and has a practical production solubility of 0.1-0.5 g Pu/ℓ. The solubility is directly proportional to the free H^+ and inversely proportional to the concentration of $H_2C_2O_4$. As the percentage of plutonium(IV) increases from 0% to 100%, the plutonium oxalate color changes from turquoise-blue to blue-grey and finally to light tan. At 500°C - 600°C both plutonium(III) and plutonium(IV) oxalate convert readily in air to a reactive, slightly substoichiometric oxide that is quite reactive[4,20] during hydrofluorination or dissolution in HNO_3/HF. Plutonium(III) oxalate purifications give good decontamination factors from such impurities as Al^{+3}, Fe^{+3}, and UO_2^{+2}. There is less decontamination from sodium, potassium, and calcium and none from americium(III).

b. Plutonium(IV) Oxalate. Plutonium(IV) oxalate $[Pu(C_2O_4)_2 \cdot 6H_2O]$ precipitates readily from dilute acids[16,17,21,22] but is usually quite fine and often gummy. Precipitation at elevated temperatures can greatly improve precipitate characteristics. Experience at Los Alamos indicates the best precipitate is produced by the simultaneous addition of plutonium nitrate solution and 1M $H_2C_2O_4$ solution to well-stirred 1.5M HNO_3 maintained at about 60°C (Fig. 8). The precipitate is quite coarse and compares favorably with the best plutonium(III) oxalate precipitates. Hanford[23,24] treats the fairly pure plutonium-nitrate feed with hydrogen peroxide (H_2O_2) to reduce plutonium(VI) to plutonium(IV) because plutonium(VI) oxalate is quite soluble. Investigators found the higher iron content of the miscellaneous feed solutions at Los Alamos increased H_2O_2 decomposition for a similar pretreatment. They added the H_2O_2 at the

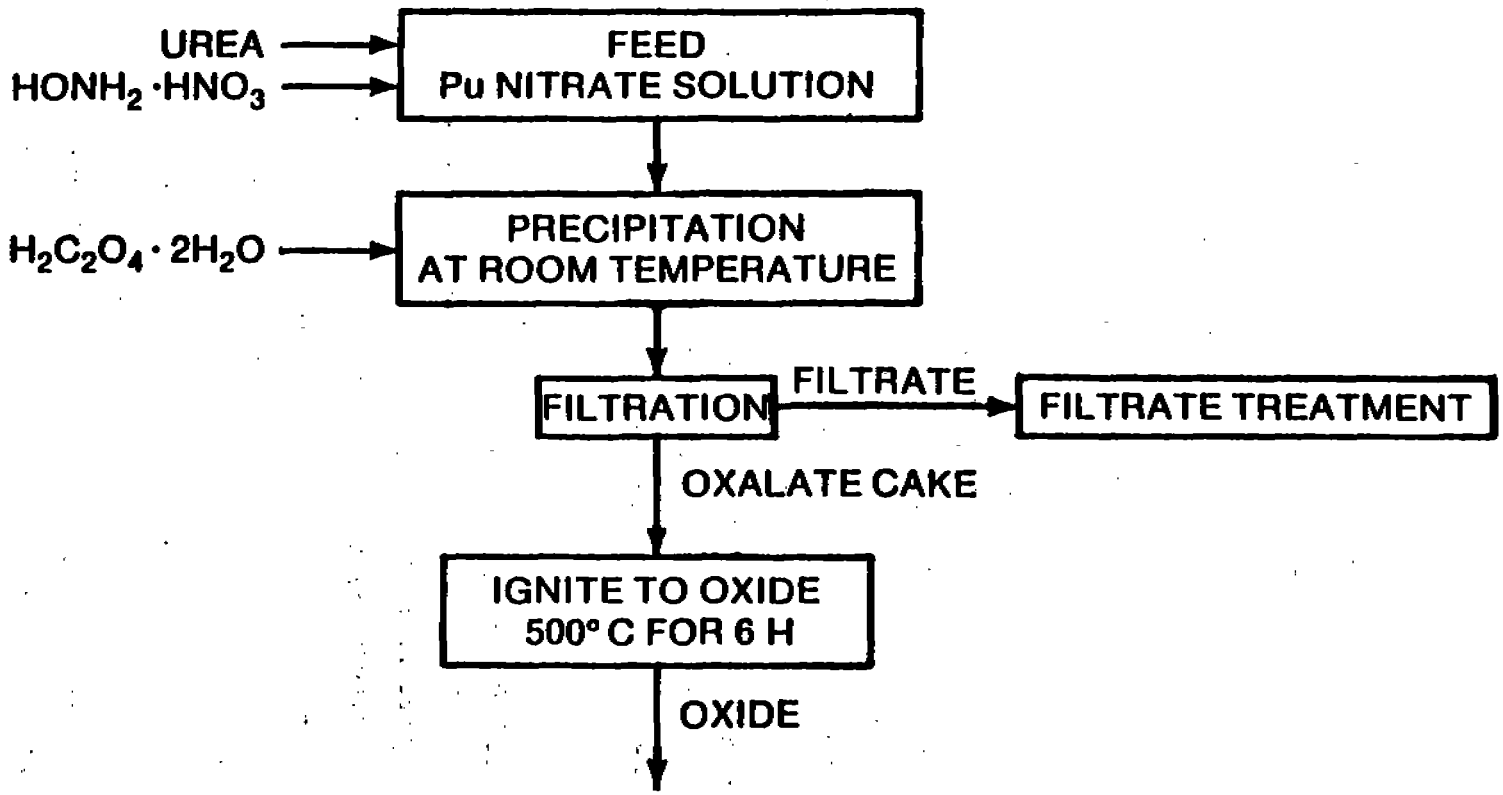

Fig. 7. Plutonium(III) oxalate precipitation.

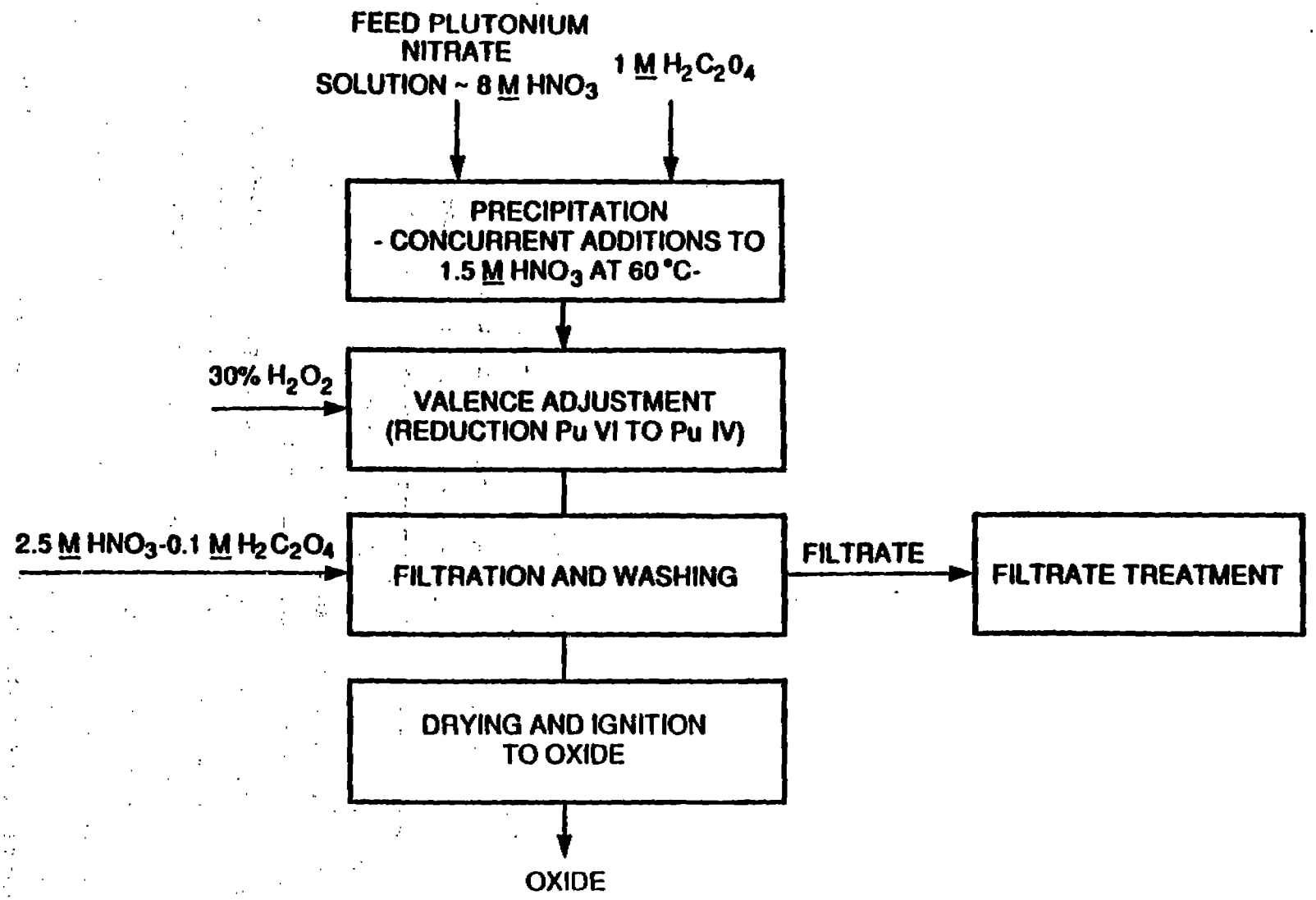

Fig. 8. Plutonium(IV) oxalate precipitation.

end of the precipitation because the ferric iron was complexed by oxalate ion and was therefore less effective in H_2O_2 destruction. The Hanford precipitation is continuous, whereas the Los Alamos precipitation is a batch process. The Los Alamos precipitate is medium tan and quite coarse. Filtration and washing are very rapid, and the oxide product is a free-flowing powder with few or no lumps. Recovery filtrate losses are approximately 0.2-0.5 g Pu/ℓ. Because of their higher acidity, Fe^{+3}, Al^{+3} and UO_2^{+2} have higher decontamination factors than do plutonium(III) oxalates. The solubility of plutonium(IV) oxalate in the presence of excess $H_2C_2O_4$ generally exhibits a minimum value in the range of 1-3M free H^+. At lower acidities, a strong oxalate complex increases the solubility, and at higher acidities the solubility increases because of the solvent action of the strong acid.

c. Plutonium Peroxide. Plutonium peroxide is an olive-green precipitate formed by the addition of 30%-50% H_2O_2 to a solution of plutonium(IV) (Fig. 9). The useful range for nitric solution is 2.5-5.5M H^+. A brown peroxy complex forms during the first addition of H_2O_2; a red complex follows.[25] Finally, the olive-green peroxide precipitate forms. To prevent appreciable H_2O_2 decomposition, operators hold the temperature at 10°C-15°C; however, if the reaction is stable, 15°C-20°C is appropriate. High levels of iron, copper, manganese, or nickel will catalyze the destruction of H_2O_2, producing a rapid decomposition. In respect to other precipitations, the peroxide purification probably gives the best overall decontamination from cations. Unlike oxalates, peroxides give excellent decontamination from ^{241}Am. At higher acidities and with careful H_2O_2 addition, the readily filterable hexagonal form of plutonium peroxide will precipitate.[26] At lower acidities, an undesirable, gelatinous, cubic form will precipitate. Mixtures of hexagonal and cubic phases do occur. Sulfate ion added to the plutonium-nitrate feed solution at 0.1-0.3M concentration tends to improve precipitate characteristics. Plutonium peroxide is not a stoichiometric compound, but its O/Pu ratio may approximate 3.5. Anions such as NO_3^-, SO_4^{--}, and Cl^- are incorporated into the structure. RFP hydrofluorinates

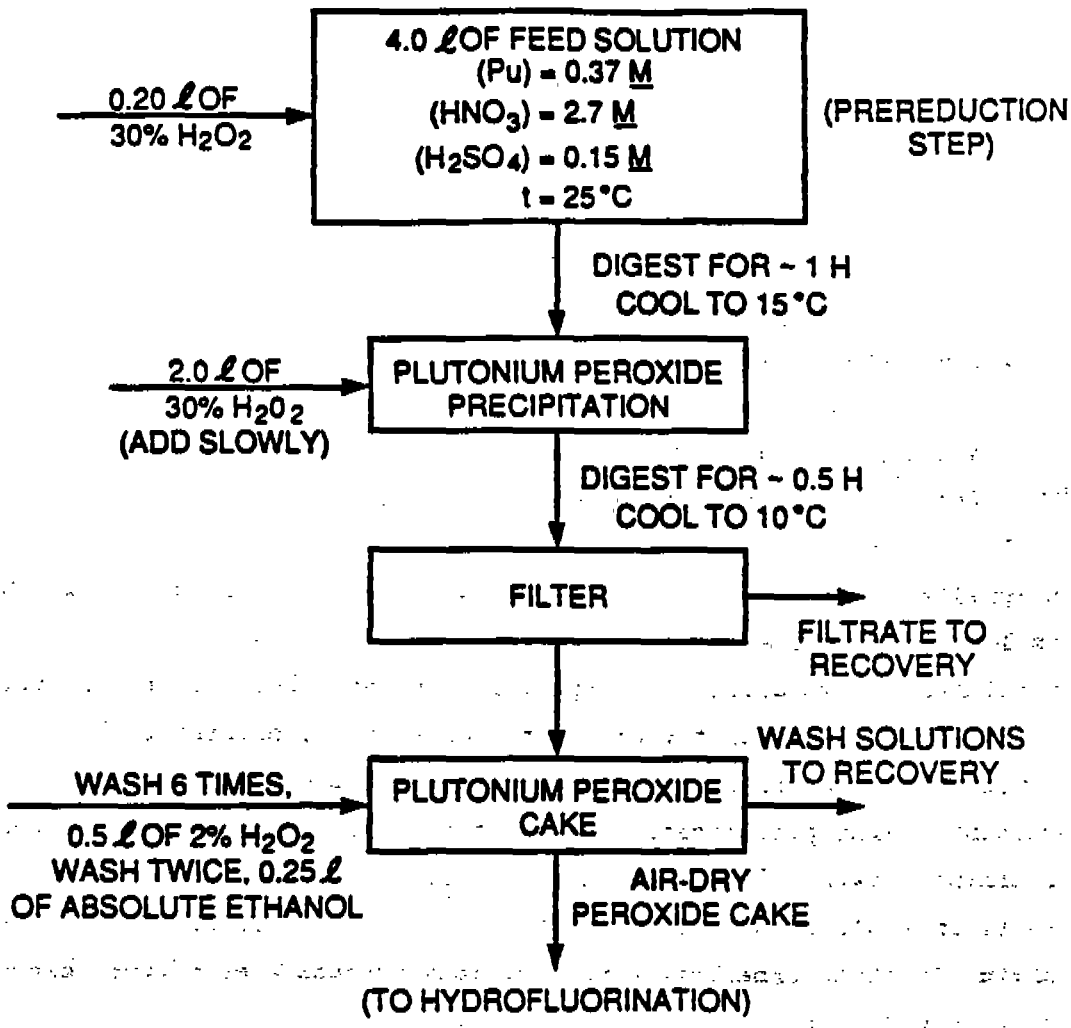

Fig. 9. Plutonium peroxide precipitation.

plutonium peroxide to obtain plutonium tetrafluoride (PuF_4) for calcium reduction to metal. Los Alamos formerly used this process but now uses plutonium peroxides exclusively for purification. The dissolution of the peroxides is followed by a plutonium(III) oxalate precipitation and calcination either to provide oxide for the Fast Flux Test Facility breeder-reactor experiment or to provide a feed for metal production. It should be noted that calcination of oxalates is more easily controlled than calcination of peroxides.[27]

d. Plutonium Hydroxide. As we noted earlier, hydroxide precipitations are quite useful for producing a filtrate that can be discarded to final waste management. Frequently, facilities treat oxalate and peroxide filtrates with sodium hydroxide (NaOH) or potassium hydroxide (KOH) for precipitation of plutonium and ^{241}Am hydroxides and destruction of H_2O_2. If plutonium(III) is present, plutonium(III) hydroxide will precipitate, but it will then slowly oxidize to plutonium(IV), which is much less soluble and has a solubility product of 10^{-52} to 10^{-56}.[25] The plutonium(IV) hydroxide is generally a green gelatinous precipitate that occludes many ions from the solution. As we noted before, the objective is to use the precipitation as a scavenger because purification is not very good. Hydroxide precipitations are particularly valuable as a method for discarding waste chloride solutions because there are no serious corrosion effects in stainless steel if the solutions are alkaline. One difficult problem is the handling of voluminous precipitates of such elements as magnesium and calcium, unless the pH can be carefully controlled.

e. Plutonium Fluoride. Although the process is not as common as oxalate and peroxide precipitations, some facilities have precipitated plutonium as PuF_3 and $CaPuF_6$[16,17] to provide precursors to metal reduction. Both compounds can be precipitated, filtered, and dried, although HF, O_2, and elevated temperatures are necessary for pure PuF_3, and argon or nitrogen is used to dry $CaPuF_6$. Dried PuF_3 may be roasted in O_2 to produce a mixture of PuF_4 and PuO_2, which will give 95%-97% yields of plutonium metal upon reduction with calcium metal. Precipitated $PuF_4 \cdot 2.5H_2O$ is hard

to filter, handle, and dehydrate, so it is not a metal-reduction precursor. Decontamination from many impurities is not good for plutonium fluoride, so the feed solutions must be relatively pure. Savannah River has used variations of the PuF_3 process, but Los Alamos, Hanford, and RFP use hydrofluorination of oxalates, oxides, or peroxides.

f. Disposal of Oxalate and Peroxide Filtrates. Because facilities cannot directly discard oxalate and peroxide filtrates to final waste management, the materials must undergo further treatment. Oxalate filtrates cannot be easily and directly recycled because $H_2C_2O_4$ interferes appreciably with tributylphosphate (TBP) solvent extraction and with absorption of plutonium on a nitrate anion-exchange column. Addition of $Al(NO_3)_3$ or increasing the HNO_3 to 9M HNO_3 can allow the nitrate anion-exchange technique to be used.[4] At Los Alamos, evaporation of the oxalate filtrates destroys a relatively large amount of the oxalate ion while allowing a more economical volume of solution to be recycled through the ion-exchange column. Hanford and Savannah River use 0.02-0.04M Mn^{+2} to catalyze elevated-temperature destruction of $H_2C_2O_4$. Heat will decompose H_2O_2, but operators must use caution to prevent violent decomposition.

As we noted above, both peroxide and oxalate filtrates are amenable to hydroxide precipitation and subsequent discard of their filtrates. The hydroxide cakes can be recycled for recovery of the plutonium and americium.

3. Nitrate Anion Exchange. At Los Alamos and RFP, nitrate anion exchange is the major technique employed in the aqueous concentration and purification of plutonium. Originally, the resin of choice was a gel-type Dowex* 1 × 4 (50-100 mesh),[4,28] which was used at Los Alamos and other sites for many years. However, Los Alamos now uses a macroporous resin in production-scale columns.[29]

* The Dow Chemical Co., Midland, MI 48640.

Nitrate anion exchange is an extremely powerful technique for recovering and separating plutonium from most of the elements in the periodic table. Figure 10 presents distribution coefficients for certain elements in a nitrate anion-exchange system operated at room temperature and using 7M HNO_3 and Dowex 1 × 4 (50-100 mesh) resin.[30] The hexanitrato complex, $Pu(NO_3)_6^{-2}$, formed by plutonium under these conditions results in the large distribution coefficient (Kd ~1000).[4] The HNO_3 concentration of the feed solution may vary depending upon the amount of nitrate salts present. The absorption of plutonium increases with increasing nitrate concentration at constant acidity. Aluminum will complex such anions as fluoride and oxalate,[4,26] which would normally complex the plutonium and prevent full plutonium absorption on the resin.[4,31] The plutonium must be in the IV state to form the hexanitrato complex and, as is well known, plutonium in aqueous solutions can exist in a multiplicity of the four possible valences. The potentials separating the oxidation states, although small, are sufficient to allow operators to obtain the desired oxidation state by a judicious selection of the sequence and type of reducing and oxidizing agents.

Ion-exchange operations may be conveniently divided into the following steps: (1) oxidation-state feed adjustment, (2) loading, (3) washing, (4) elution, and (5) readjustment of the column from the low-acid elution step to 7M HNO_3 in preparation for the next step.

Although plutonium operations have used many reducing and oxidizing agents, the major reagents used in production operations include hydroxylamine nitrate ($NH_2OH \cdot HNO_3$),[32] ferrous ammonium sulfate [$Fe(SO_4) \cdot (NH_4)_2SO_4 \cdot 6H_2O$] sodium nitrite ($NaNO_2$), urea [$CO(NH_2)_2$] and H_2O_2. Depending upon the processing history of the plutonium solution, the plutonium(VI) content may vary over a wide range. Generally speaking, solutions that have been boiled for extended periods (for example, recycle solutions from the production-scale thermosiphon evaporator) or solutions that have been maintained at less than 3M HNO_3 at elevated temperatures[33] tend to contain large amounts of plutonium(VI). Consequently, Los Alamos

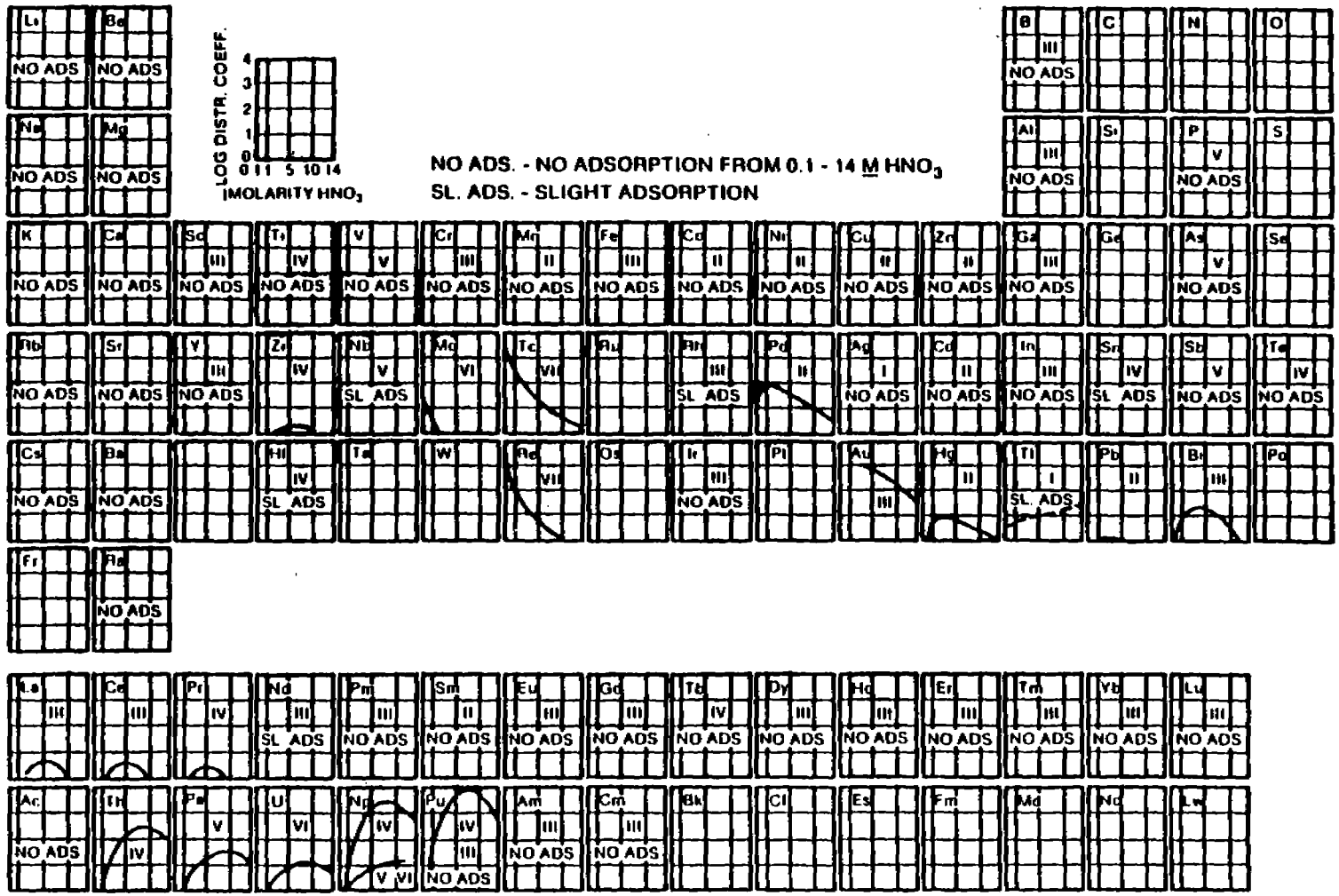

Fig. 10. Anion-exchange relative exchange efficiency.

uses two oxidation-state adjustment schemes, the full-reduction flow sheet and the partial-reduction flow sheet.

a. Valence and Feed Adjustment. For the solutions suspected of having large quantities of plutonium(VI) the full-reduction flow sheet is indicated (Fig. 11).[8] This flow sheet consists of the following steps:

1. Operators reduce the H^+ concentration to <3M to prevent a violent reaction. The addition of $CO(NH_2)_2$ before $NH_2OH \cdot HNO_3$ destroys the nitrite that would otherwise consume the reducing agent before it could react with the plutonium. Then technicians add 1.5 moles of $NH_2OH \cdot HNO_3$ per mole of plutonium.

2. The addition of $Fe(SO_4) \cdot (NH_4)_2SO_4 \cdot 6H_2O$ ensures the complete reduction of the plutonium(VI). The process requires a digestion period of at least 45 min.

3. The addition of $AL(NO_3)_3 \cdot 9H_2O$ enhances plutonium absorption by complexing the F^- ion and increasing NO_3^- concentration.

4. Operators add $NaNO_2$ to oxidize the plutonium(III) to plutonium(IV). The process requires a digestion period of at least 15 min to ensure complete oxidation.

5. Operators adjust the HNO_3 concentration to 7M by adding 15.6M HNO_3 and then feed the solution to the anion-exchange column.

This flow sheet is extremely effective in converting all plutonium to plutonium(IV). However, it adds relatively large amounts of salts and causes a significant volume increase.

For feed solutions containing a low concentration of plutonium(VI), the experimental partial reduction flow sheet discussed below may work successfully.

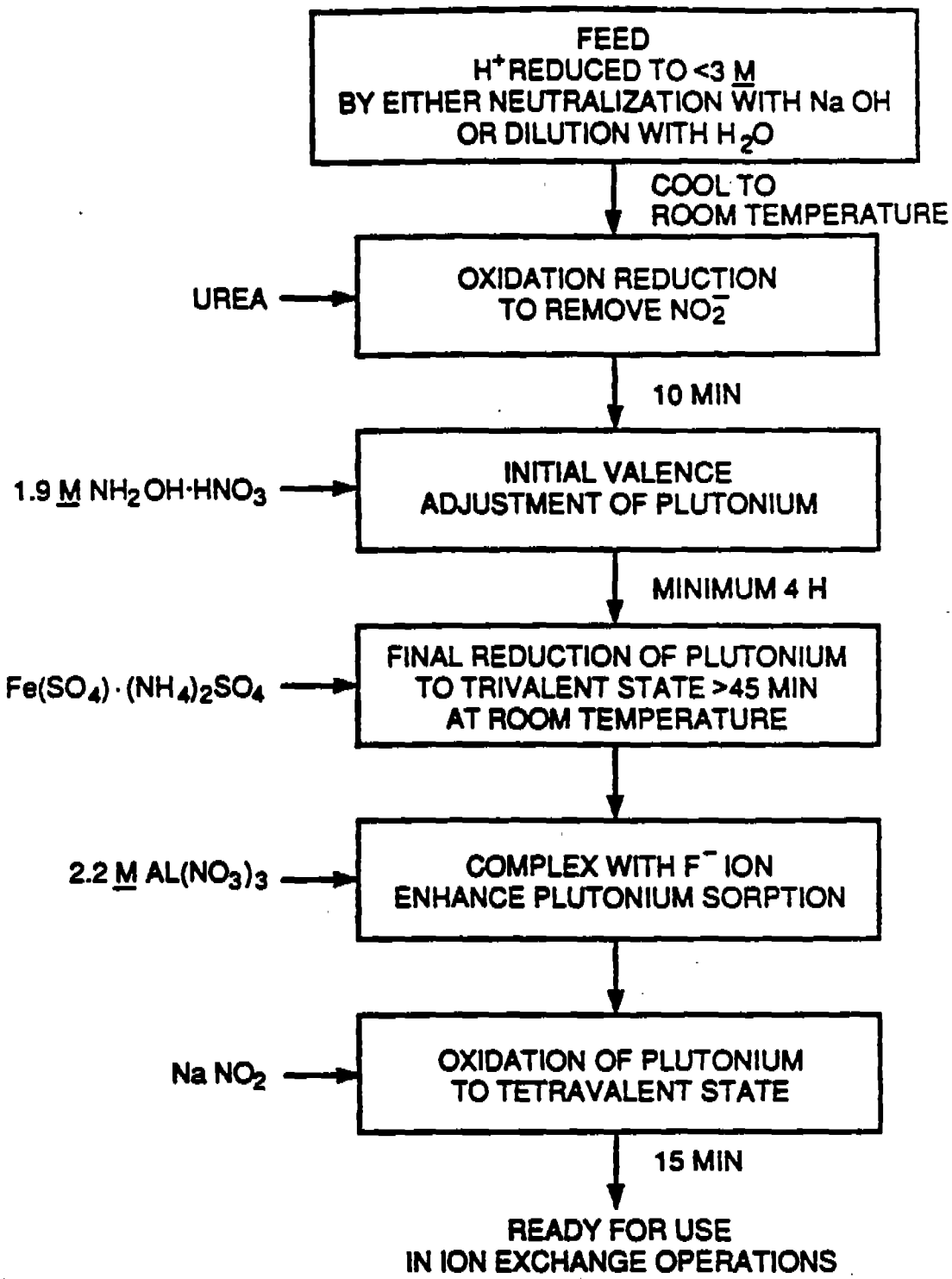

Fig. 11. Stabilization of plutnoium(IV).

1. In the past, $NaNO_2$ was added initially. However, researchers doubt its efficiency in the reduction of plutonium(VI) to plutonium(IV). Based on earlier work, current experiments by S. F. Marsh at Los Alamos involve the production-scale use of H_2O_2 as an agent for reducing plutonium(VI) to plutonium(IV).[34]

2. The addition of $Al(NO_3)_3$ complexes the F^- ion.[4] S. F. Marsh has quantified this effect.[31]

3. Operators adjust the HNO_3 concentration to 7M.

4. Technicians load the treated feed solution on the anion-exchange resin bed.

b. Loading. Flow rates for feed solutions passing through the resin bed vary according to plutonium concentration. At Los Alamos, solutions containing up to 10 g Pu/ℓ are pumped through the bed at a rate of 60 ℓ/h. Recent work by Marsh[35] indicates that these flow rates may be increased by use of the new macroporous resin LEWATIT MP-500-FK.* For solutions containing >10 g Pu/ℓ, operators decrease the flow rate to 10 ℓ/h. A recently developed on-line gamma detector allows the constant monitoring of the behavior of uranium, plutonium, and americium during the process, and column breakthrough is readily identified.[36,37] Also, technicians can see the plutonium band through the glass column and can vary flow rates to meet the prevailing conditions. Scientists at Savannah River are also evaluating on-line passive gamma analyzers.[38]

c. Washing. After loading the plutonium on the resin bed, technicians wash the impurities from the bed using 7M HNO_3. The plutonium content of the wash requires most of this solution to be recycled. The fraction of

*Mobay Chemical Corporation, Pittsburgh, PA 15205.

impurity remaining on the column is a function of the wash volume. As a rule of thumb, elements having a distribution coefficient of zero can be washed from the resin bed with 1-2 column volumes (here defined as void volume) of 7M HNO_3. Elements having higher distribution coefficients exhibit a more complex behavior and several column volumes may be required for the wash, depending upon the element. Separation of elements such as thorium, neptunium, and the precious metals by standard flow sheets is relatively ineffective, and other separation techniques must be utilized.[4] However, thorium and neptunium can be absorbed on the resin if the plutonium is reduced to the III state by hydrazine/ferrous sulfamate using Savannah River techniques.[39] Note that these are guidelines only. For example, uranium has a Kd of approximately 15, yet operating experience at Los Alamos indicates that uranium is rather efficiently removed in most cases.

d. Elution. Following the washing of the impurities from the resin bed with 7M HNO_3, technicians pump 10 ℓ of 1M HNO_3 through the bed, thus reducing the acid concentration in preparation for the elution step. At Los Alamos, the addition of 10 ℓ of 0.3M $NH_2OH \cdot HNO_3$ reduces plutonium(IV) to the III state and elutes it from the column. The elution is completed using 0.3M $NH_2OH \cdot HNO_3$/0.5M HNO_3. The acid added to the second volume of eluate prevents polymer formation, but the acid is not necessary in the first volume of eluate because the residual HNO_3 in the resin bed keeps the acid concentration >0.5M.[4] At RFP, elution uses only low concentrations of HNO_3 that destroy the absorbed hexanitrato complex; however, experience at Los Alamos has shown that the increased rates and associated volumes are unacceptable from a production-volume standpoint for columns operated at room temperature. James[40] has described this low HNO_3 elution.

For safety, elution is done at room temperature at Los Alamos. Van Slyke[41] addresses some safety concerns of elevated-temperature column operation.

The $NH_2OH \cdot HNO_3$/plutonium(III) eluate at Los Alamos is suitable for plutonium(III) oxalate precipitation. The parameters are discussed in Section 2.a, the section on precipitations.

4. Chloride Operations. Chloride salts are a very important category of residues and are by-products from many pyrochemical operations. The pyrochemical chloride-based operations currently in operation include the following:

- DOR,
- ER,
- molten salt extraction (MSE), and
- pyroredox.

These chloride-based residues are especially challenging for aqueous recovery because of the difficulty of handling this material in stainless steel equipment. Los Alamos will soon install Kynar-lined glove boxes to monitor their behavior in production-scale operations. RFP has also had extensive experience in aqueous recovery of chloride-based residues.[42,43]

The pyrochemical conversion of PuO_2 to metal generates DOR residues.[15] This process utilizes a molten calcium chloride ($CaCl_2$) solvent and a calcium metal reductant and is described in more detail in Section III.B. The scrap consists of $CaCl_2$/CaO and may contain up to several percentage points of plutonium by weight, a percentage that depends on the type of oxide feed. Active oxides such as those resulting from the calcination and roasting of plutonium oxalate give yields up to 99%. Foundry oxides, which are less reactive, produce lower yields.

Los Alamos facilities have recovered plutonium from DOR salts using the chloride anion-exchange process (Fig. 12). The general flow scheme, presented below, is an outgrowth of research described by James[44] and Clifton.[45]

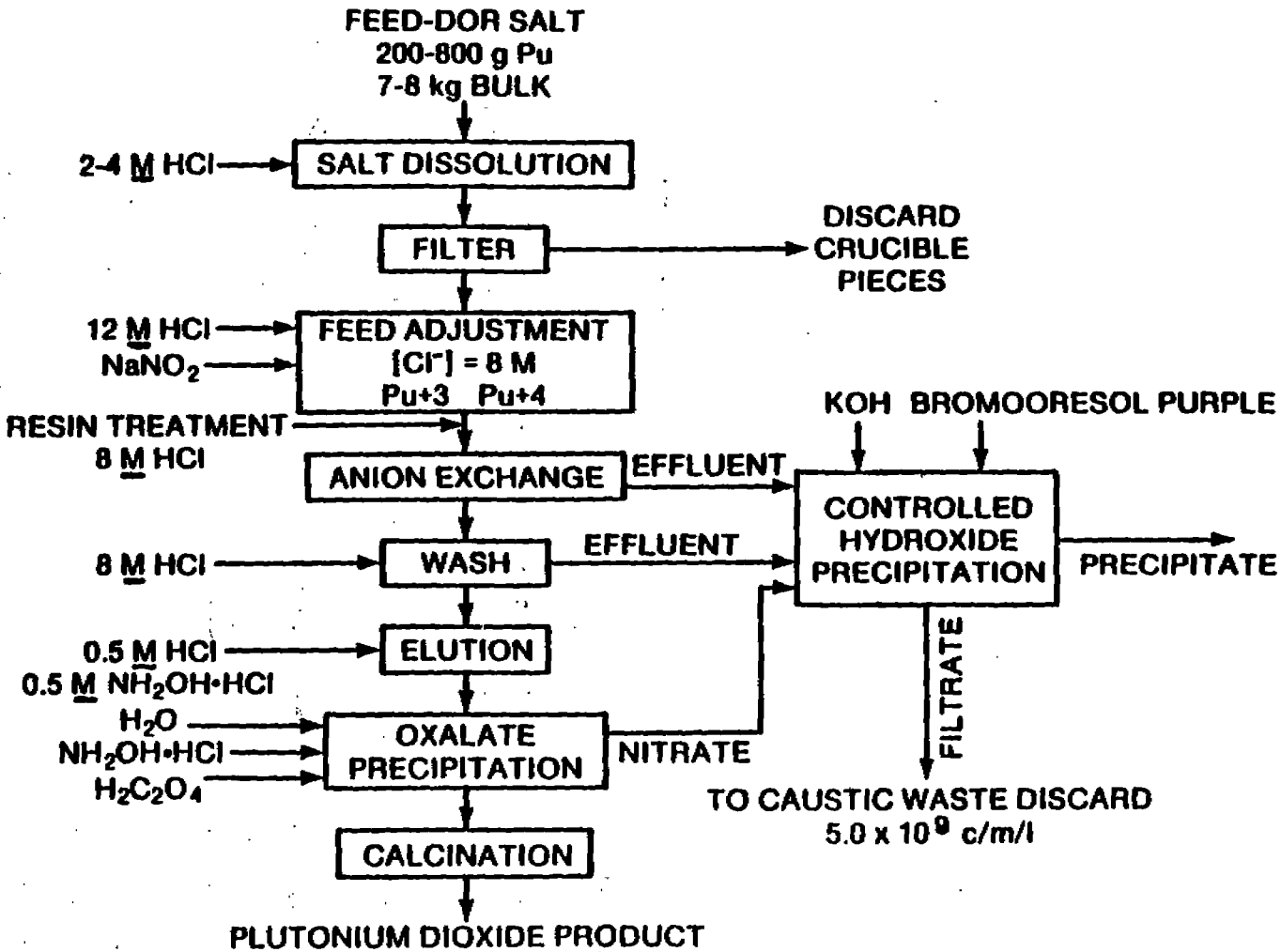

Fig. 12. Chloride anion exchange.

1. The salt is dissolved in a minimum amount of 2-4M HCl.

2. The addition of $NaNO_2$ stabilizes the plutonium in the IV state and the operator adjusts the chloride concentration to 8-10M and the H^+ concentration to 2M.

3. The feed solution then passes through a 6-in. by 24-in. glass column filled with chloride-form anion-exchange resin. The plutonium(IV) is absorbed on the resin.

4. The operator washes the impurities from the column with 8M HCl.

5. The plutonium is reduced to the III valence and is eluted from the resin bed with 0.5M HCl and 0.5M HCl/0.5M $NH_2OH \cdot HCl$.

6. The addition of solid oxalic acid precipitates the plutonium(III) from the eluate solution.

7. The operator collects the plutonium(III) oxalate by filtration, washes it with dilute HCl, and transfers it to a calcination vessel.

8. The oxalate cake is thermally converted to PuO_2 at 500°C for 5 h.

9. The chloride effluent undergoes a controlled hydroxide precipitation up to pH 7-8 in an attempt to reduce the amount of cations precipitating with the plutonium.

10. The operator discharges the hydroxide filtrate to the caustic-waste treatment area if discard limits are met.

11. The precipitate, depending upon plutonium content, is either dried and discarded or sent to the chloride head-end processing for recycle.

12. The filtrate from step 6 is reprocessed through steps 9-11.

13. The oxide generated by this process is then suitable for conversion to metal and purification by ER techniques.

The major process for the pyrochemical purification of impure plutonium metal is ER. The residues from ER are the anode heel, the solvent salt consisting of sodium chloride/potassium chloride (NaCl/KCl), and lesser amounts of plutonium, americium, and magnesium in the form of metals, oxides, and chlorides. Also, the MgO reaction crucible, which is mechanically broken at the completion of the ER cycle in order to recover the pure plutonium metal ring, is part of the ER residues requiring additional processing. A pyroredox operation can recover the plutonium from the spent anode heel. Also, the pyrochemical salt-stripping operation recovers a large portion of the ER salt residues. These residues are also recovered using aqueous techniques. Facilities often recover the spent anode using the flow sheet for impure plutonium metal. The anode heel can be oxidized in air to form impure PuO_2 and then purified using the standard nitrate flow sheet. Los Alamos has recovered ER salts using chloride anion exchange. The flow sheet is very similar to the one used for DOR salts. The MgO crucible fragments are leached in 6M HCl and can usually be discarded after one or two passes. The leachate can be handled by either the chloride anion-exchange or solvent-extraction flow sheets presented in this section.

A pyrochemical process for the rapid and economical extraction of very active metals from plutonium metal is MSE. Section III.C.3 gives more detailed information. It is primarily used for the efficient removal of ^{241}Am, which is the radioactive decay product of ^{241}Pu. This pyrochemical method uses magnesium chloride ($MgCl_2$) in equimolar NaCl/KCl to oxidize americium (and some plutonium), thus allowing it to extract into the salt phase. The very prevalent 60-keV gamma emission from the americium necessitates great care and extensive shielding for any glove-box hands-on

MSE salt-recovery operations. Where possible, operators should use remote control for recovery operations.

Recovering plutonium from MSE salts has involved either direct aqueous techniques or indirect techniques where a pyrochemical, aluminum reduction product of the plutonium, americium, and magnesium is then processed by aqueous methods. Los Alamos produced an experimental calcium reduction product that was subsequently processed by nitric dissolution and peroxide purification.[46] At RFP, the all-aqueous process for plutonium recovery from MSE salts consists of the following steps:

1. The salt is crushed and dissolved in a large volume of dilute HCl; this step is followed by absorption of plutonium and americium on a cation column and, finally, by column washing.

2. Technicians then elute the plutonium and americium with HNO_3. Following feed adjustment, the plutonium is absorbed on a nitrate anion-exchange column. The effluent, containing the americium, is concentrated for either waste-management disposal or subsequent recovery of the americium, depending upon the prevailing economic factors.

3. Operators elute the plutonium from the nitrate anion-exchange column and merge it with other fairly pure feed streams.

At Los Alamos, the first all-aqueous method for the MSE salts had to meet severe process-volume constraints for chloride solutions. Consequently, the Laboratory developed the following precipitation process.[47]

1. Technicians dissolve the salt in a minimal volume of 1M HCl.

2. The plutonium and americium are coprecipitated as their trivalent oxalates.

3. A controlled-pH hydroxide precipitation conducted on the oxalate filtrate results in minimal magnesium precipitation and a hydroxide filtrate that can be discarded.

4. Technicians filter and thoroughly wash the coprecipitated oxalates. This process is followed by thermal (350°C-500°C) conversion to mixed oxides, dissolution in HNO_3/HF, and distillation to remove chlorides and some acid.

5. The plutonium is purified by a peroxide precipitation that attains americium decontamination factors of 100 to 200.

6. An excess of NaOH destroys H_2O_2 in the peroxide filtrate. Operators reacidify the slurry and americium oxalate precipitates with about 10% of the precipitate being plutonium oxalate.

7. Thermal conversion of the dense and relatively easily handled americium-oxalate cake gives an impure oxide. This is a convenient form for either further purification or waste-management disposal.

Originally, steps 6 and 7 consisted solely of the hydroxide steps, but filtration problems and a low-density, gummy, hard-to-handle precipitate made the hydroxide/oxalate procedure attractive.

A recent process developed initially at Argonne National Laboratory and placed under further development at Los Alamos utilizes solvent extraction to immediately separate plutonium from the large amounts of americium and salts.[48]

1. After technicians dissolve the MSE salt in a small volume of dilute HCl, the plutonium is oxidized to the IV state and is extracted with TBP in tetrachloroethylene. This process is followed by a dilute HCl strip and plutonium oxalate precipitation.

2. Current development work involves extracting the americium from the TBP raffinate with carbamoylmethylphosphineoxide (CMPO) in tetrachloroethylene and stripping with dilute HCl/1M $H_2C_2O_4$. These steps are followed by an americium oxalate precipitation. Depending upon the market for americium, a simple oxalate precipitation on the TBP raffinate may suffice for waste-management purposes.

Los Alamos is performing the extraction and stripping in centrifugal annular contactors (Fig. 13) designed by Argonne National Laboratory for the TRUEX process,[49,50,51] and built by Los Alamos using Hastelloy C* for corrosion resistance.

B. Metal Preparation

A number of operations such as conversion to fluoride, oxide, or chloride can prepare plutonium metal from scrap or oxide.[52,53] The compound can then be reduced to metal, usually in an impure form. In pyrochemical operations, a series of processes changes this impure metal to high-purity metal. In this section, we describe operations now used to purify the material, the waste streams generated, and methods available to recover plutonium from the residues.

1. Fluorides. Reactive oxides formed by the calcination of oxalate or peroxide precipitates formed by the addition of oxalate and H_2O_2 to a suitable aqueous solution of plutonium(III) can be treated in a hydrofluorinator to form PuF_4.[54] In addition, PuF_3 can be precipitated

* Union Carbide Corporation, 270 Park Avenue, New York, NY 10017.

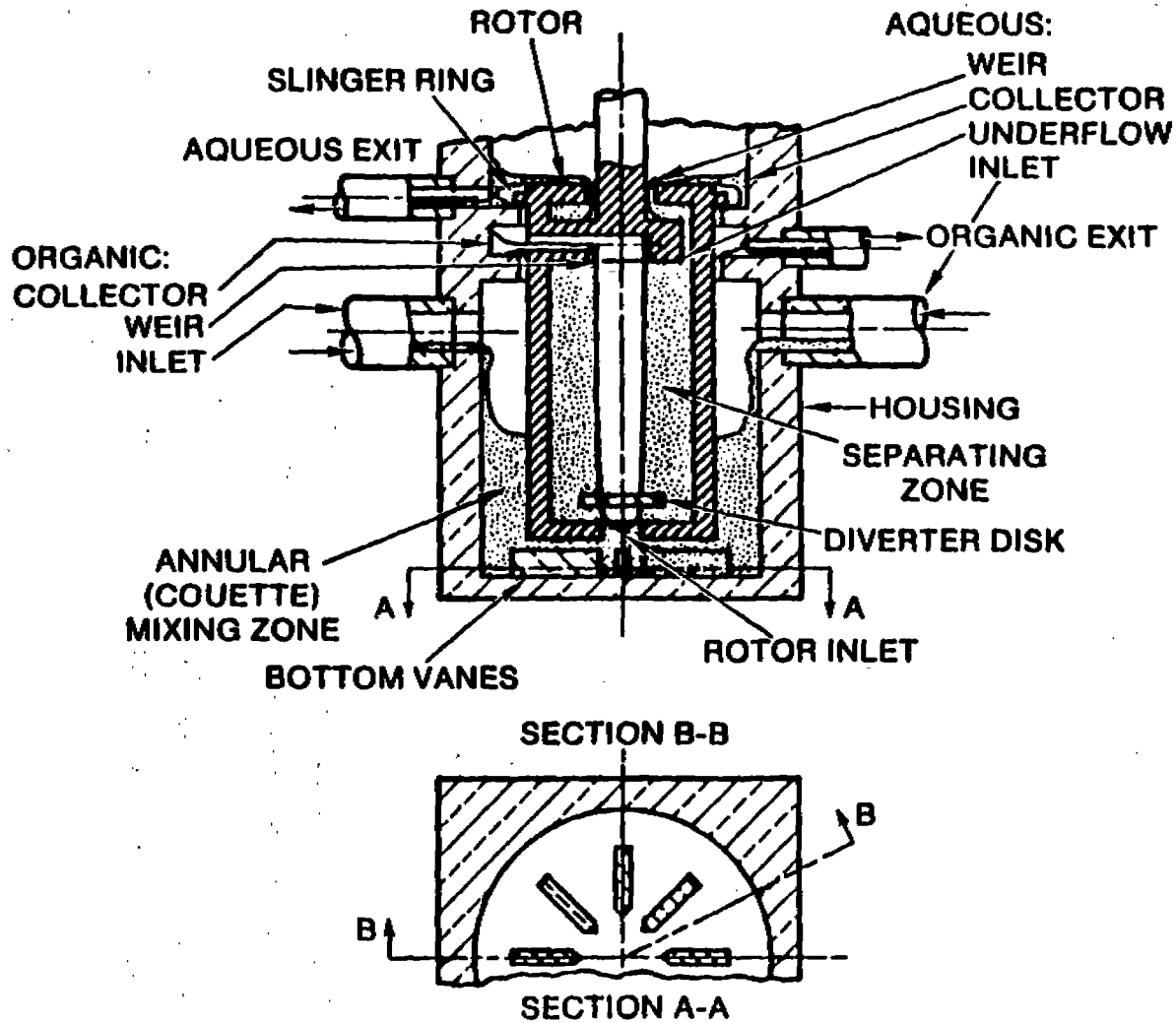

Fig. 13. Centrifugal annular contactors.

directly from nitrate solution through the reaction with HF. Controlled heating can then convert this PuF_3 to $PuF_4 \cdot PuO_2$. Mixing the PuF_4 or $PuF_4 \cdot PuO_2$ with calcium and heating it to reaction forms CaF_2 and metal plutonium. Quite often a booster (such as iodine) both initiates the reaction and provides sufficient energy to ensure the complete reaction:

$$PuO_2 + 4\ HF \rightarrow PuF_4 + 2\ H_2O \quad \text{and} \tag{2}$$

$$PuF_4 + 3Ca + I_2 \rightarrow Pu + 2\ CaF_2 + CaI_2\ . \tag{3}$$

This method of preparation does not produce any purification; however, it does not introduce impurities.[55] With a high-purity oxide such as that often produced by the PUREX process, the fluoride process can produce a metal that meets purity specifications for most applications. Wastes generated include MgO sand (which is added for heat transfer), CaF_2, and the MgO reaction crucible. As we stated earlier, these residues are treated by aqueous methods to recycle any plutonium. The subsequent wastes are discarded.

The major disadvantage of the process is the high neutron-radiation field from the (α,n) reaction, which constitutes a hazard to personnel.

2. Oxides. Most scrap containing plutonium can be converted to oxide by burning it at an elevated temperature in air. The oxide, if reactive, can then be converted to fluoride for reduction. However, unreactive or high-fired oxide does not react to form fluroide; instead the addition of a strong reducing agent in a solvent salt can reduce the oxide to metal.[55] The impure metal product forms a button in the bottom of the crucible that is covered by a fused oxide/salt layer. The reaction is

$$PuO_2 + n\ M^o \rightarrow Pu + M_nO_2\ (\text{salt}), \tag{4}$$

where M^o is the reductant.

The salt acts as a heat sink and a solvent for the oxide of the reductant that forms during the reaction. The button can be separated mechanically from the salt. In DOR, one pass produces yields of up to 99%; the residue, under present criteria, is less than the EDL value and is discarded or placed in long-term storage.

3. Chlorides. Another alternative for treating plutonium oxides is to convert the oxide to chloride.[56] The synthesis of plutonium metal by bomb reduction of the trichloride with calcium metal and an iodine booster has, in fact, been demonstrated on the same scale as the fluoride reduction.[57] The reactions are

$$2\ PuO_2 + 3\ Cl_2 \rightarrow 2\ PuCl_3 + 2\ O_2 \quad \text{and} \tag{5}$$

$$2\ PuCl_3 + 3\ Ca \rightarrow 2\ Pu + 3\ CaCl_2\ . \tag{6}$$

$PuCl_3$ is extremely hygroscopic, and investigators have not solved the engineering problems associated with moisture. Furthermore, although the chloride process was initially proposed for converting oxide formed by direct calcination of $PuO_2(NO_3)_2 \cdot 6H_2O$ solutions to the chloride, the oxide was not active enough to promote the reaction.

The chloride, however, would decrease the neutron-radiation problem present with PuF_4. Engineering problems could be addressed from the 1980s materials position. Finally, the use of inert boxes could overcome the problem of the hydroscopic nature of the salt.

$PuCl_3$ could also be a good replacement for $MgCl_2$ in several steps of the integrated pyrochemical process. Its use would significantly decrease the introduction of magnesium into the metal stream.

4. Hydriding. Hydriding and dehydriding or hydriding followed by oxidation can recover plutonium metal scrap adhering to other metals.[58] Even at room temperature, plutonium reacts with hydrogen to form a metallike powder. The reaction is

$$2\ Pu + 3\ H_2 \rightarrow 2\ PuH_3\ . \tag{7}$$

Heating the hydride in a vacuum removes the hydride powder from the inert substrate and recovers the plutonium metal. As an alternative, the hydride can be slowly oxidized in air to form the oxide by the reaction

$$4\ PuH_3 + 7\ O_2 \rightarrow 4\ PuO_2 + 6\ H_2O\ . \tag{8}$$

The oxide can then be treated to recover metal.

5. Pyroredox. Pyroredox is a two-step process in which plutonium is initially oxidized to remove impurities less reactive than the oxiding agent. The plutonium is subsequently reduced back to metal, leaving impurities more reactive than the reducing agent in the salt phase.[59-61] The reactions are

$$Pu(0) + (Ox) \rightarrow Pu(III) + (Ox) \quad \text{and} \tag{9}$$

$$Pu(III) + (Re) \rightarrow Pu(0) + (Re)\ , \tag{10}$$

where (Ox) and (Re) are the oxidizing and reducing agents, respectively. Table I provides relative reactivities for estimating separation factors. The resulting metal contains impurities such as zinc, calcium, anda which can be removed by vacuum distillation, MSE, and metal liquidation.

TABLE I

FREE ENERGIES OF FORMATION OF CHLORIDES AT 1000 K

$-\Delta G_f^o$ (kcal/g-EQUIVALENT Cl)

$BaCl_2$	83.4	$CmCl_3$	58.8
KCl	81.4	$PuCl_3$	58.5
RbCl	81.2	$MgCl_2$	57.7
$SrCl_2$	81.0	$NpCl_3$	54.1
CaCl	80.0	UCl_3	51.8
$SmCl_2$	80.0	$ZrCl_2$	49.2
LiCl	78.8	$ClCl_2$	49.2
$CaCl_2$	77.9	$FeCl_2$	26.6
NaCl	75.7	$NbCl_5$	24.6
LaCl	67.0	M_DCl_2	8.0
$PrCl_3$	66.3	$TcCl_3$	7.0
$CeCl_3$	66.3	RhCl	5.8
$NdCl_3$	64.2	$PdCl_2$	3.8
YCl_3	61.2	$RuCl_3$	1.4

The pyroredox process can upgrade lower-purity plutonium metal for further purification, usually by ER. The next section describes specific processes.[62]

C. Metal Purification

In this section we describe the integrated pyrochemical process to present a fairly systematic approach for recovering plutonium and for treatment of residues. Over the last six years, Los Alamos has produced significant quantities of high-purity metal from impure refractory oxides by this approach.[15,63] RFP conducts similar operations, and both the Atomic Weapons Establishment in the UK and Lawrence Livermore National Laboratory

plan to use this approach. A pyrochemical method is also proposed for recovering plutonium and uranium in the Integrated Fast Reactor (IFR) at Argonne National Laboratory. As part of the IFR program, Argonne is evaluating halide slagging and ER.

Figure 14 shows the present system at Los Alamos. The major processes are

- bomb reduction of PuF_4,
- DOR,
- MSE,
- anode casting, and
- ER.

As the figure shows, each operation produces residues that are treated either by pyrochemical or aqueous means to recover plutonium. We will discuss the pyrochemical processes in detail.

1. Metal Preparation Line (MPL). The MPL produces plutonium metal from PuF_4 by the high-pressure reaction between the fluoride and calcium metal.[13] After fluorination of oxide, a booster, such as iodine, initiates the second reaction:

$$PuO_2 + 4\ HF \rightarrow PuF_4 + 2\ H_2O \quad \text{and} \tag{11}$$

$$PuF_4 + 3Ca + I_2 \rightarrow Pu + 2CaF_2 + CaI_2\ . \tag{12}$$

Figure 15 shows the reduction furnace. The action of HF converts plutonium peroxide, oxalate, or a low-fired (under 800°C) oxide to fluroide. About 2 kg of the tetrafluoride, calcium metal, and magnesia slag are thoroughly mixed in a molded, open-porosity magnesia crucible. Iodine, added before the equipment is assembled and heated, acts as an initiator and reaction booster. At approximately 325°C, calcium and iodine react exothermally to rapidly raise the temperature. At 600°C the reduction of tetrafluoride begins and, with reaction, the system temperature rises rapidly to nearly 2000°C. The slag remains molten while the molten plutonium sinks to the

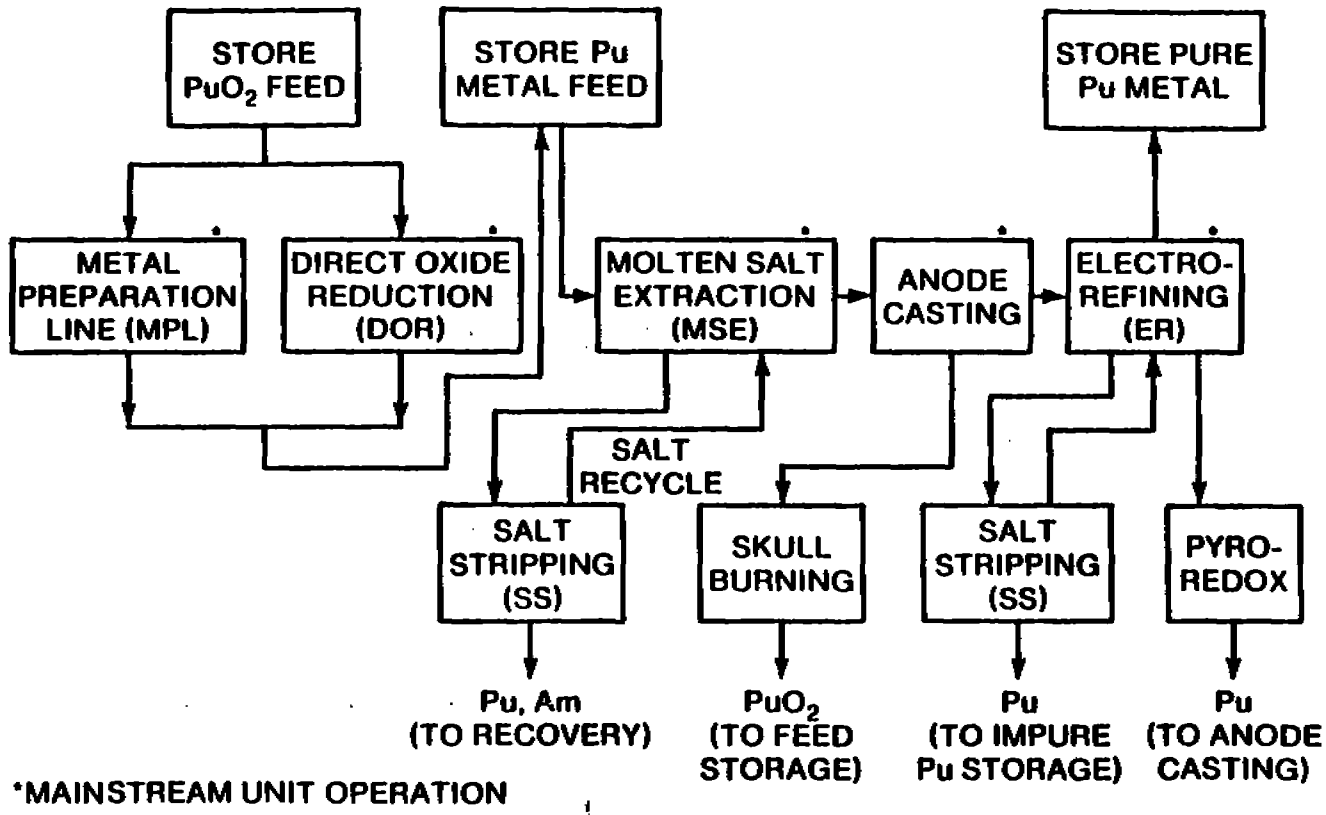

Fig. 14. Integrated pyrochemical processing system.

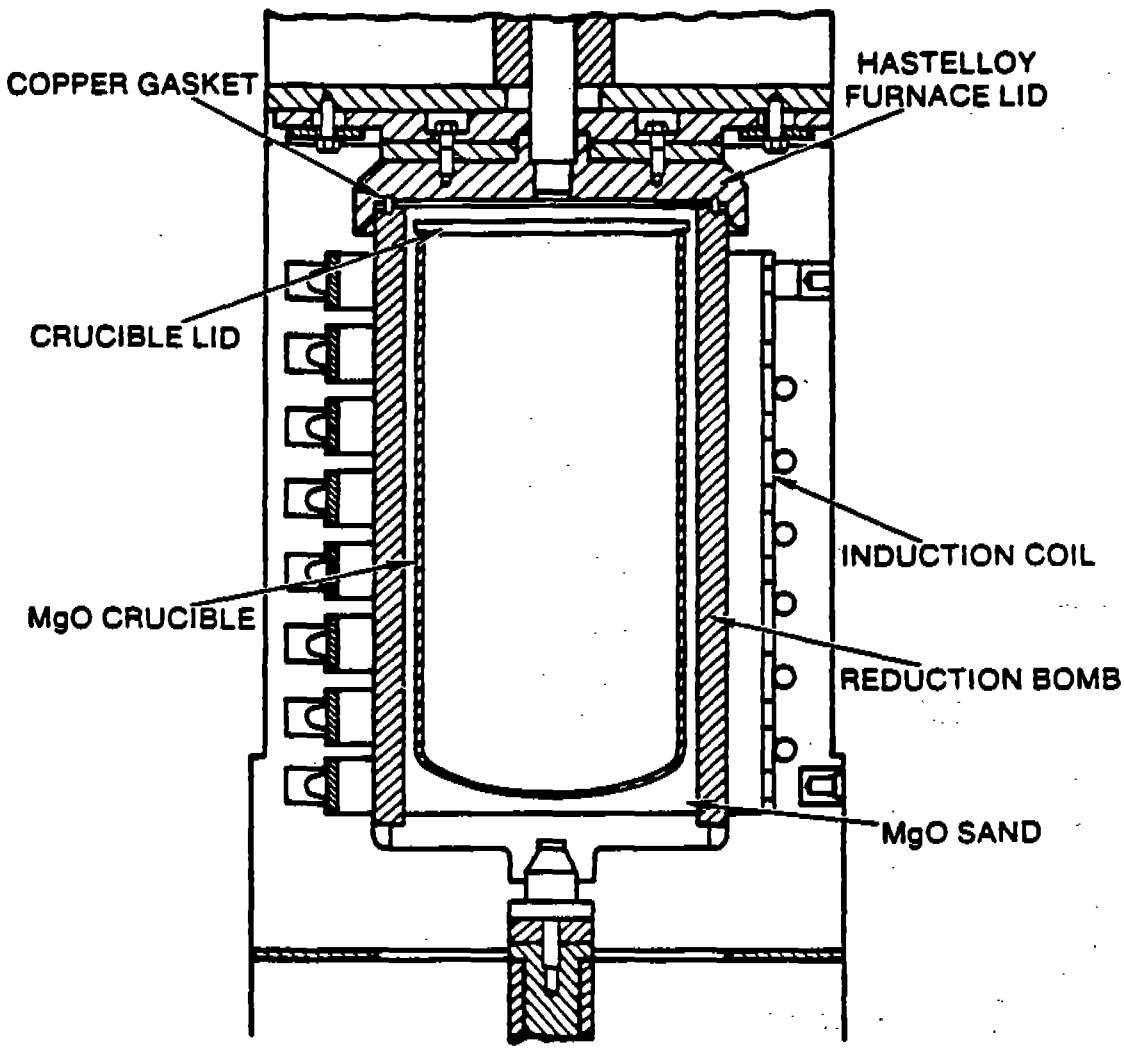

Fig. 15. Los Alamos PuF_4 reduction furnace.

bottom of the crucible and solidifies. After the equipment has cooled, technicians disassemble it and break the crucible to recover the metal button (which is mechanically separated from the slag).[63]

The waste streams are slag (CaF_2-$CaCl_2$), crucible, and magnesia sand. Aqueous processing recovers any plutonium in the slag or crucible, and the sand is reused. During fluorination, the off-gases are scrubbed with potassium hydroxide solution, which is tested for plutonium content and transferred to waste management when either it is exhausted chemically or its plutonium concentration reaches the discard limit.

Little or no purification occurs during the process, and the metal purity is similar to that of the feed material.[52] However, reagents introduce no impurities and, if sufficiently pure feed is used, the resulting metal is satisfactory for high-purity applications. Yields usually range from 97% to 99%.[14]

In a similar process at Savannah River, a mixture of 25 mol% PuO_2 and PuF_4 is the feed, and yields range from 95% to 99%.[64]

2. Direct Oxide Reduction (DOR). All oxide for the DOR process is calcined at 800°C, sampled, and transferred into the DOR processing area.[63] Technicians place up to 1 kg of oxide in a magnesia crucible with 5 kg of fused $CaCl_2$ and add a charge of calcium (50% calculated excess).[65] Figure 16 shows the equipment. The standard reaction vessel is vitrified magnesia, although some development work has investigated the use of tungsten or tantalum. For the magnesia reaction vessel, each reduction requires a new crucible, and holdup is minimized. The $CaCl_2$ salt can be replaced with a lower melting eutectic, $CaCl_2$ 26 mol% CaF_2, for the heat sink and solvent.[66] This replacement might reduce any side reaction of calcium with the magnesia crucible. In experiments at Los Alamos, investigators found no marked advantages with the eutectic and, in fact, high-melting salts apparently formed during eutectic preparation.

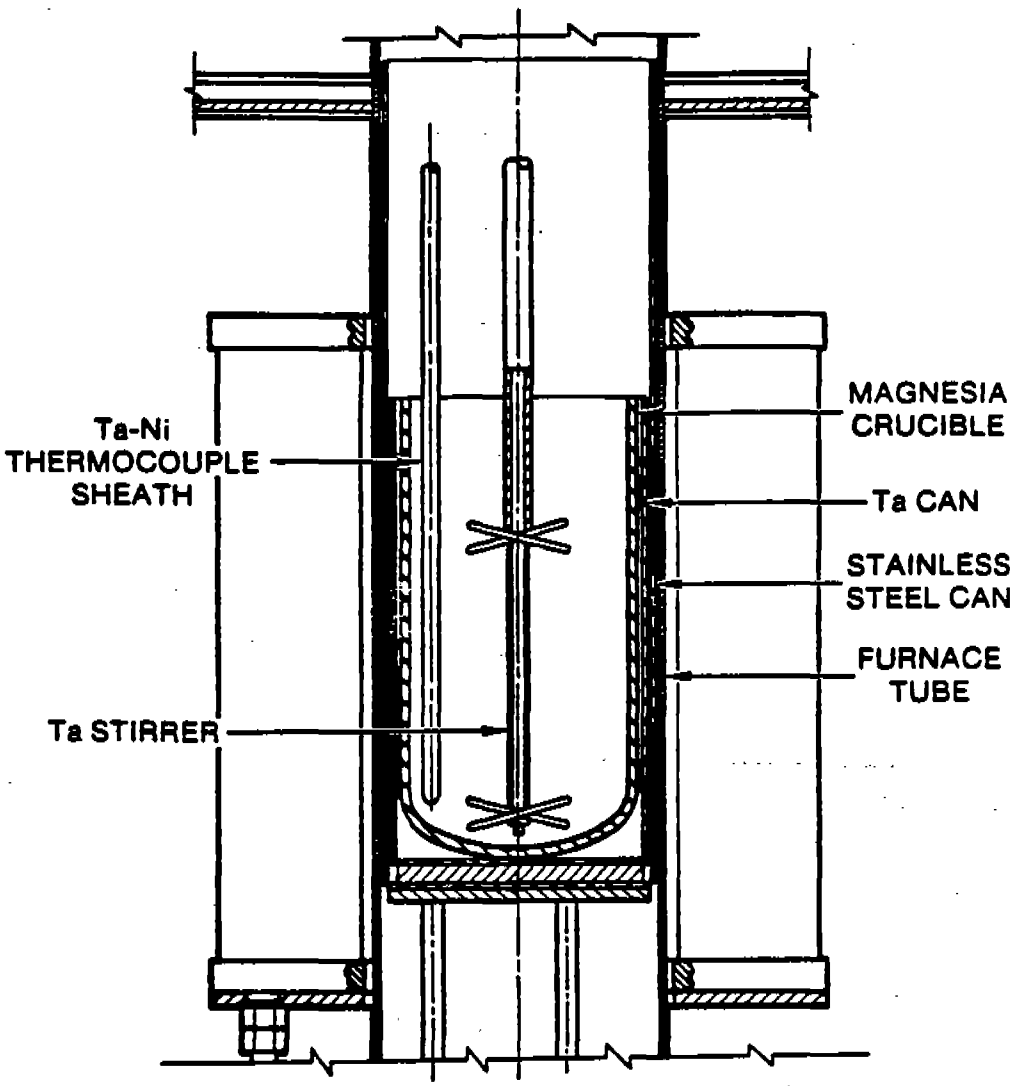

Fig. 16. DOR equipment.

Development work in this area continues at both Lawrence Livermore National Laboratory and Los Alamos National Laboratory.

The $CaCl_2$ is cast before use and contains no detectable water. However, the reduction transfers small amounts (parts per million [ppm]) of impurities from salt to the plutonium metal. The resulting metal is almost always more impure than the oxide from which it is formed. Efforts to produce high-purity metal by using purified reagents have not been successful, and facilities must further process metal formed by DOR to meet purity specifications.

Typically, the reaction begins at about 820°C with a temperature spike to 875°C. Reaction is complete within 15 min. The overall chemical reaction is

$$PuO_2 + 2\ Ca = Pu + 2\ CaO\ , \tag{13}$$

and the free energy of formation (ΔF) is estimated at -44.3 kcal at 1000°C.[55] The reaction proceeds to completion when excess calcium is present, sufficient $CaCl_2$ is available to dissolve the CaO that is produced, and rapid stirring is applied.

The reaction vessel cools until the products solidify. Almost all the plutonium forms a button at the bottom of the crucible. The salt immediately above the button contains a layer of metal shot, and the bulk of the salt solidifies above the metal. Technicians mechanically separate the button and recover the shot by reheating the shot-rich layer (usually with calcium present) above the melting point to consolidate the metal. Product yields are greater than 95%.[15] The metal phase contains significant impurities, as Table II shows. Both the spent salt and calcium are sufficiently low in plutonium to be discarded under present waste-management practices. However, the salt is by far the largest waste

TABLE II

REDUCTION OF "PURE" PLUTONIA TO METAL BY DOR

Concentration of Impurity (g Element/10^6 g of Sample)

			Run 1		Run 2	
Element	$CaCl_2$	Ca	PuO_2	Pu	PuO_2	Pu
Li	200	<10	<1	40	<1	<1
Be	<1	<5	<1	<1	<1	50
B	90	<5	2	<1	3	50
Na	6,000	<35	7	40	5	20
Mg	200	4,000	<1	1	<	1,000
Al	30	<10	<5	60	<5	100
Si	175	<5	<	150	<5	280
K	16,000	<350	15	<10	40	30
Ca	-	-	80	1,000	500	3,000
Cr	4	<10	<5	<5	<5	25
Mn	<3	5	2	1	<1	1
Ni	3	14	<5	15	<5	15
Sr	6,000	700	<5	5	<5	<5
Ag	<1	<5	<1	5	<1	15
Ta	<100	<1,000	<100	<100	<100	<100
Fe	55	<10	110	175	75	65
Ga	<3	<10	2	100	5	4
U	-	<10	30	40	30	25
C	-	110	-	190	15	590
Pu(wt%)	-	-	87.80	99.66	88.20	99.64

generated during the integrated process and is a promising candidate for recycle.[65]

3. Molten Salt Extraction (MSE). The MSE process separates the more-reactive elements, such as americium, rare earths, alkali metals, and alkaline earth metals, from plutonium.[59,67,68] Technicians place a ternary salt, consisting of an oxidizing agent and a salt eutectic, in contact with the impure metal. This process is the first step at RFP in extracting americium from kilogram quantities of plutonium. Los Alamos employs the process only if the americium content is greater than 1000 ppm. Other processing sites may apply other criteria. The oxidizing agent is $MgCl_2$ contained in a NaCl/KCl eutectic. The major reactions are[69,70]

$$2\ Am + 3\ MgCl_2 = 2\ AmCl_3 + 3\ Mg\ , \tag{14}$$

$$2\ Pu + 3\ MgCl_2 = 2\ PuCl_3 + 3\ Mg,\ \text{and} \tag{15}$$

$$Am + PuCl_3 = AmCl_3 + Pu\ . \tag{16}$$

The americium and plutonium contents in the salt depend on the amount of oxidant added, the concentrations of the elements in the feed, the temperature, the number of contacting stages, and the mode of operation. Under the process conditions at Los Alamos, as much as 90% of the americium and 10% of the plutonium are transferred from the feed into the salt.[63] The process equipment is very similar to that used in DOR (Fig. 16), but a reusable tantalum vessel replaces the magnesia crucible. The batch size is 4.5 kg with a 12-h temperature cycle to 750°C. (The actual reaction time is only 30 min.) After the equipment has cooled to room temperature, technicians remove the fused salt and metal button from the crucible and separate them. Usually each feed button goes through two batch extractions.

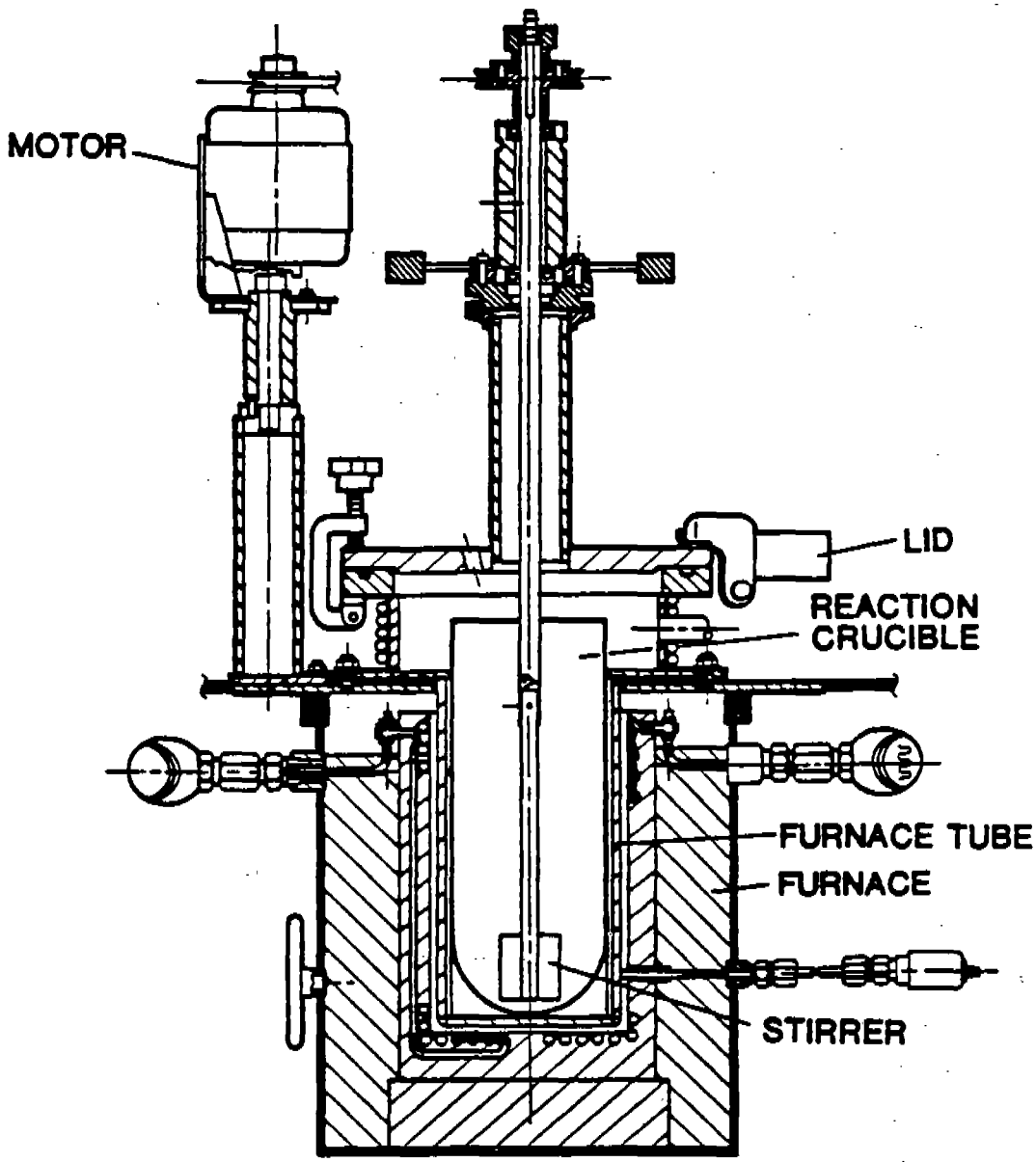

Fig. 17. RFP MSE equipment.

In the RFP procedure, workers load 2.2 kg of impure plutonium metal into a tantalum crucible with a NaCl/KCl eutectic containing $MgCl_2$ as a reducing agent.[71] Figure 17 shows the reaction cell. The salt moves through two extraction stages countercurrent to the flow of the metal in two batch operations.[67]

In both the Los Alamos and RFP processes, the final metal product is free of significant quantities of americium. Yields are satisfactory, reaching more than 95% in the two-stage countercurrent process. At present, Los Alamos recovers the salt residue by aqueous processing. RFP combines the plutonium with aluminum in a metal alloy and transfers it to the Savannah River Plant for aqueous reprocessing.[71] The high americium content in the spent salt is a potential radiation hazard that is presently minimized by using lead shielding and limiting operator exposure times. Studies of pyrochemical methods of recovery of both plutonium and americium from the spent salt have been proposed, and the possibilities are being examined.

4. Vacuum Melting and Casting. Technicians shape the impure metal button from DOR or MSE into a right circular cylinder 7 cm in diameter and 10 cm long to properly fit into the ER cell.[72] The addition of sufficient gallium ensures a critically safe geometry. Casting is accomplished by mixing about 6 kg of impure metal with gallium in a tantalum pour crucible and inductively heating the system to 800°C under vacuum. Figure 18 shows the apparatus. The metal and gallium mix upon melting and are bottom-poured from a tantalum crucible (Fig. 19) into a graphite mold.

Molten plutonium is very reactive, and the reaction

$$10\ Pu(l) + 3\ Ta_2O_5(s) \rightarrow 5\ Pu_2O_3(s) + 6\ Ta \qquad (17)$$

probably occurs during heating.[70] The oxide, however, forms a protective coating on the crucible walls and prevents further reaction.[73,74]

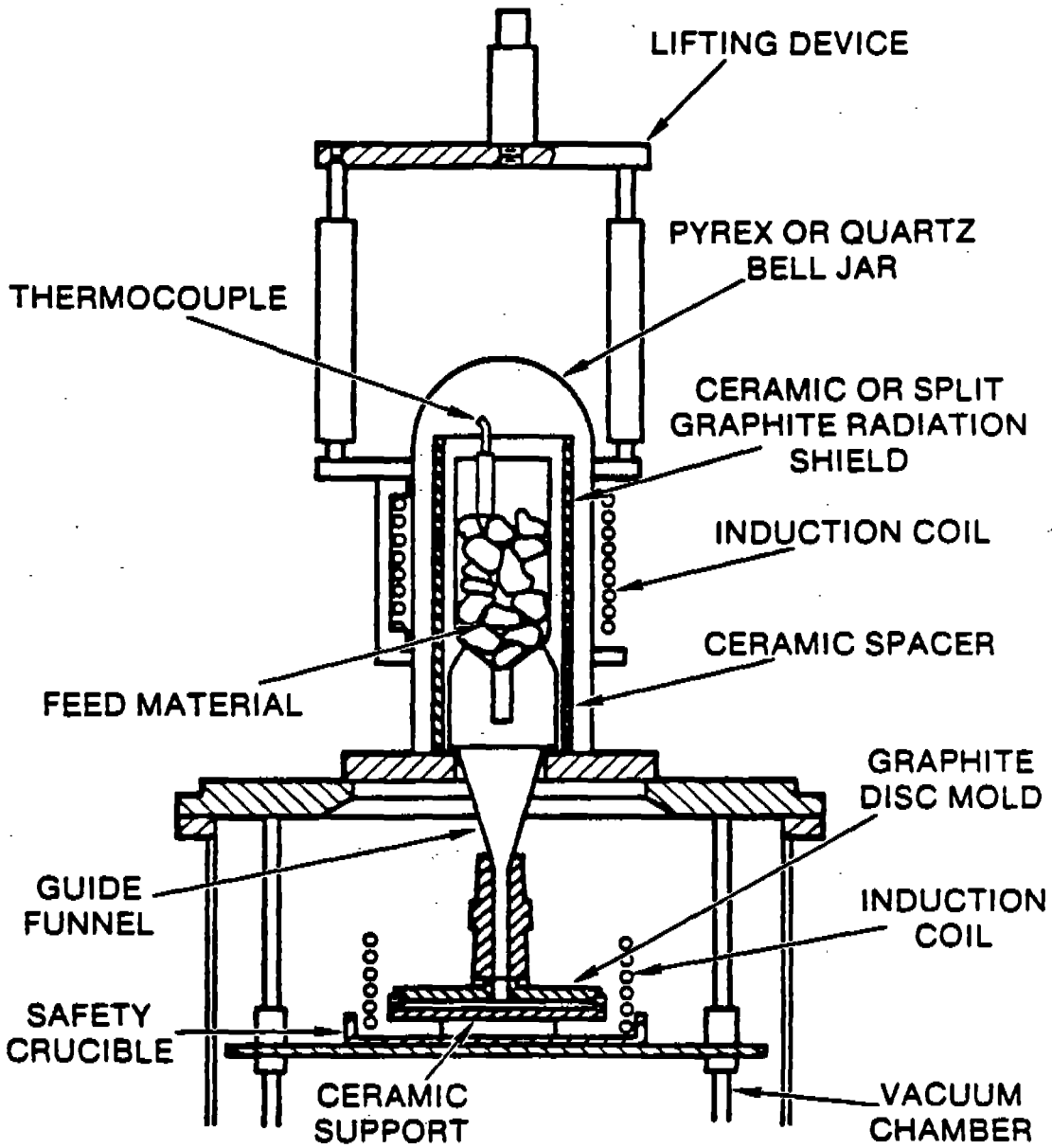

Fig. 18. Los Alamos vacuum casting equipment.

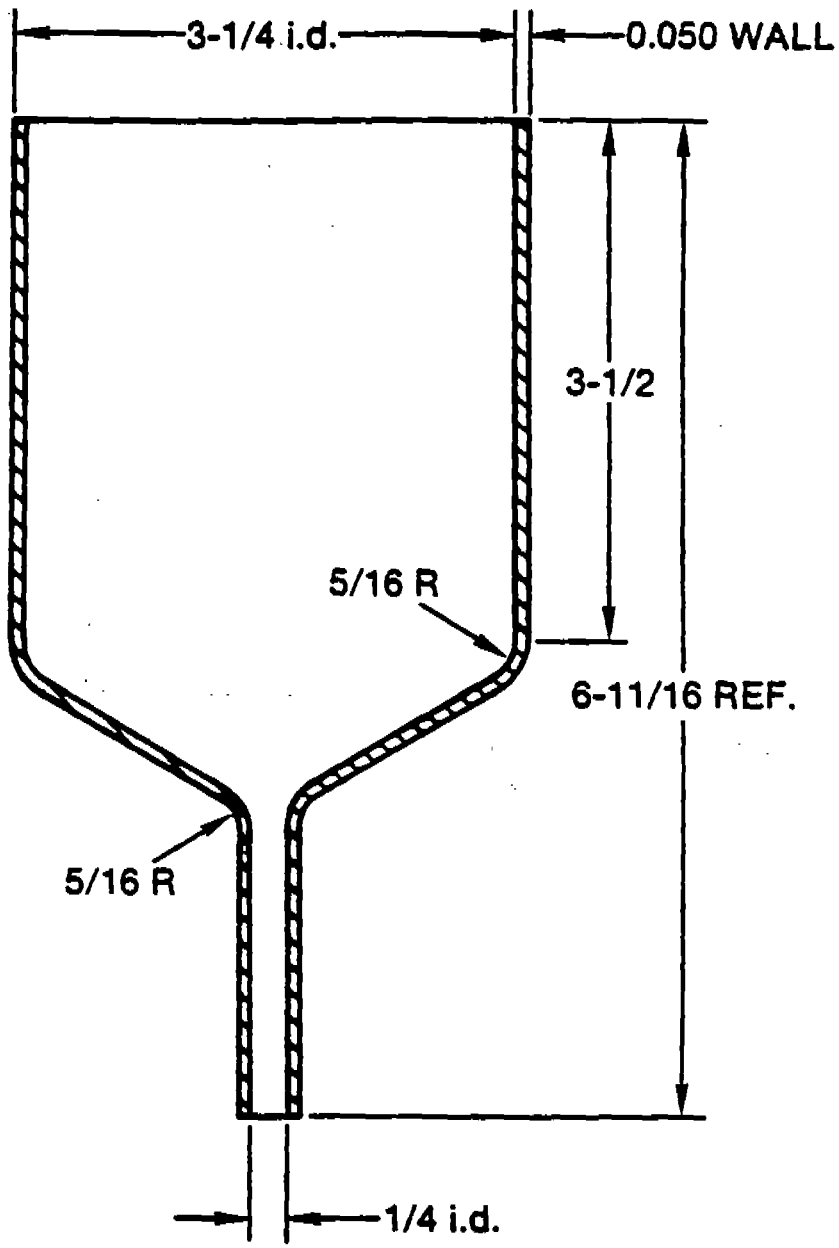

Fig. 19. Bottom-pour tantalum melt crucible.

Vacuum melting conditions may cause partial volitalization of metallic impurities such as sodium, calcium, and magnesium. Pouring releases more of the magnesium and calcium, which form a dark coating on the sides of the quartz envelope. Thorium, americium, alkali metals, and alkaline-earth and rare-earth metals tend to oxidize preferentially and concentrate in the casting residue (skull).[75] Insoluble impurities (oxides, carbides, and some metals) will float on the melt surface and generally remain in the crucible.[68]

Figure 20 shows a typical ingot. Yields are quite high, averaging over 90%. Impurity levels decrease during casting as shown in Table III, which summarizes high-purity casting feed. A casting residue always forms. It is burned in air, and the resulting oxide is rerouted either to DOR or to an aqueous process.

5. Electrorefining (ER). The major process for purifying impure plutonium at Los Alamos is ER. Liquid plutonium oxidizes from the anode into a molten-salt electrolyte. The plutonium ion is transported through the salt to the cathode, where it is reduced to metal. The reactors are

$$\text{anode} : Pu(\text{impure},l) = Pu^{+3} + 3\ e^- , \tag{18}$$

$$\text{cathode}: Pu^{+3} + 3\ e^- = Pu\ (\text{pure},l), \text{ and} \tag{19}$$

$$\text{overall}: Pu(\text{impure},l) = Pu\ (\text{pure},l)\ . \tag{20}$$

The process produces extremely pure metal if the current is sufficiently low and if the process is terminated while plutonium is still the reacting species. Yields depend upon the purity of the feed metal; Los Alamos specifies the plutonium content of anode metal to be greater than 95% to ensure satisfactory results.

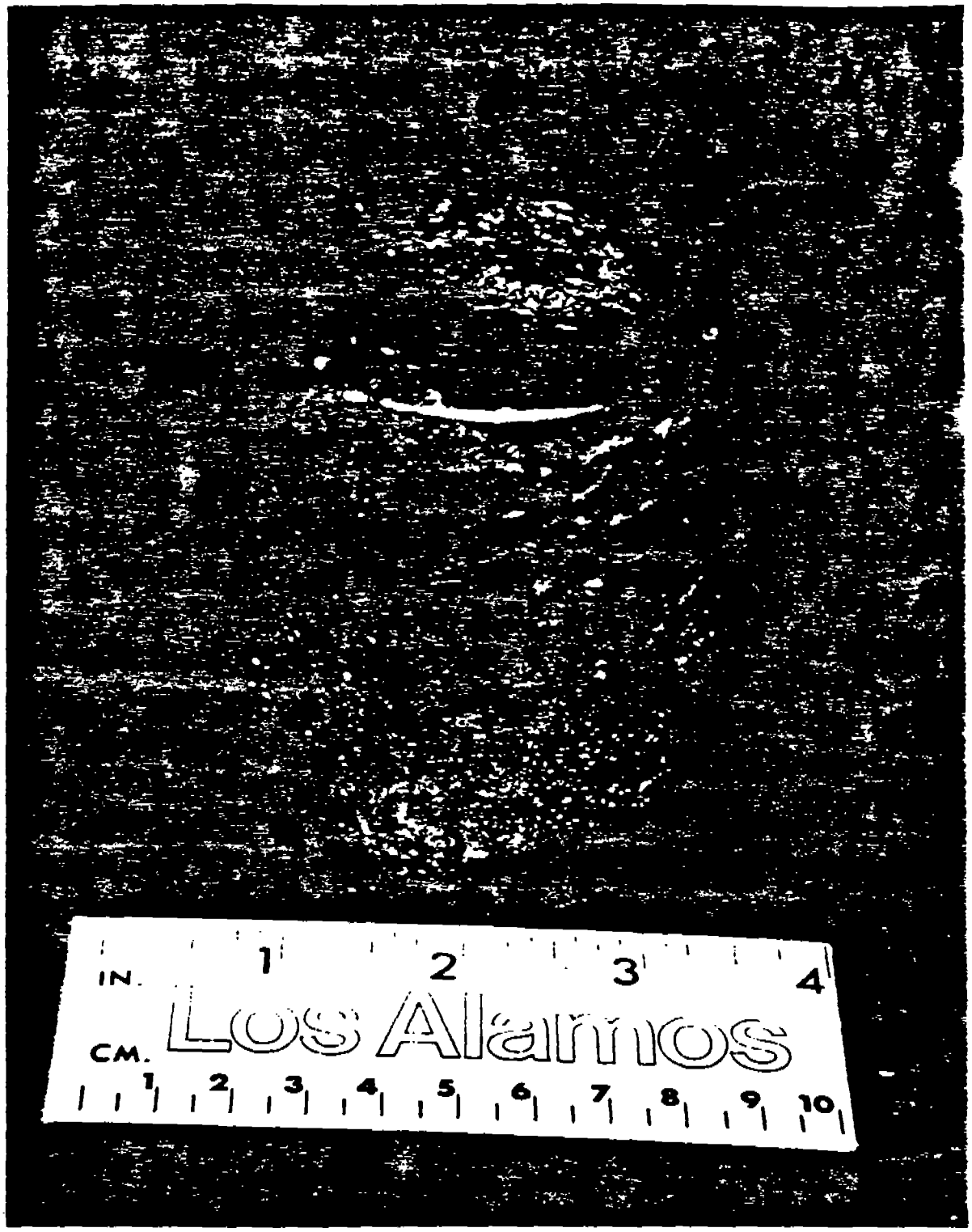

Fig. 20. Ingot from vacuum casting.

TABLE III

IMPURITY LEVELS IN HIGH-PURITY CASTING FEED AND CAST PARTS

	Metal Feed, Parts per Million			Cast Part, Parts per Million		
Element	High	Low	Most Frequent	High	Low	Most Frequent
Na	5	≤1	≤2	1	≤1	≤1
Ca	10	≤2	≤3	10	≤1	≤1
Mg	8	2	≤5	≤5	≤2	≤2
F	-	2	-	5	≤2	≤2
Al	10	≤2	≤5	8	≤2	5
Si	15	≤5	8	10	≤1	≤5
Pb	2	≤0.5	≤1	2	≤0.5	≤0.5
Cu	2	≤0.5	≤1	5	≤1	≤1
Sn	2	≤1	≤1	2	≤0.5	≤0.5
Cr	2	≤1	≤1	2	≤1	≤1
Mn	≤1	≤0.5	≤0.5	1	≤0.5	0.5
Zn	-	-	≤10	-	-	≤5
Zr	-	-	≤10	-	-	≤0.1
Mo	-	-	≤0.5	-	-	≤0.5
Th	8	≤0.5	5	-	-	≤2
U	20	4	12	29	10	12
Ta	20	≤5	10	20	≤5	10
W*	80	50	65	90	40	65
Ga	≤2	≤0.2	≤0.5	≤2	≤0.2	≤0.5
Ni	5	≤0.5	≤0.5	≤5	≤0.5	≤5
Fe	20	≤2	≤5	20	≤2	≤5
C	50	≤10	20	40	≤10	10
O	40	10	20	40	10	15
H	35	5	10	20	≤5	10
N	-	-	≤10	6	≤1	5
Am	(varies with feed)					
Pu	(weight difference)		99.985%			99.985%

Elements below detectable limits.

Li	≤0.005 ppm	Bi	≤0.5	Y	≤0.1
Be	≤0.1	K	≤0.5	Cs	≤2
B	≤0.3	Ti	≤0.2	Ba	≤0.1
Co	≤0.5	V	≤0.5	Hf	≤0.5
Cd	≤0.5	Rb	≤0.5	Re	≤0.5
La	≤1	Sr	≤0.1		

*Can be reduced to ≤2.5 ppm with more expensive TaC cathode.

Figures 21 and 22 show the Los Alamos ER reaction cell and equipment.[76] Two concentric magnesia crucibles joined at the base form the cell. In typical operations, technicians place 4-6 kg of impure plutonium metal in the inner crucible and add an equimolar mixture of NaCl/KCl containing 5 wt.% magnesium as an oxidant. This operation produces plutonium(III) in the electrolyte before a current is passed and assures the initial reduction of plutonium at the cathode. Workers assemble the cell in a stainless steel furnace tube, evacuated it, and back-fill it with argon. They then heat the cell to 740°C and lower the stirrer, anode, and cathode into the position shown in the figure. Direct current is passed through the cell and the solution is stirred until the plutonium is no longer the primary ion being formed at the anode. An increase in the static-cell potential, measured by a back emf sampling unit, indicates this event.[77] At a preset potential, the current automatically terminates and an operator withdraws the hardware from the melt. The operator turns off the heat, and the system cools to room temperature. The ceramic crucibles are broken to recover the salt, which is a primary residue, and the metal product. A technician mechanically separates the product ring, shown in Fig. 23, from the salt, samples it, and transfers it for future use.

The purity of typical product is greater than 99.95% plutonium.[78] Table IV gives the purities typically obtained for production runs. The elements less active than plutonium remain in the anode, along with a metal heel, to form the spent anode residue, which contains up to 10% of the feed metal. The residue is treated by pyroredox to recover the plutonium.

Figure 24 shows an alternative ER cell developed first at Argonne National Laboratory and later demonstrated at RFP.[71] Its design minimizes crucible breakage and cooling times in production runs.

The major residues in the process are the anode heel, the electrolyte, and metal trapped on the crucible, stirrer electrodes, and thermocouple well. These can be recovered by a number of aqueous and pyrochemical processes.[62,79-81]

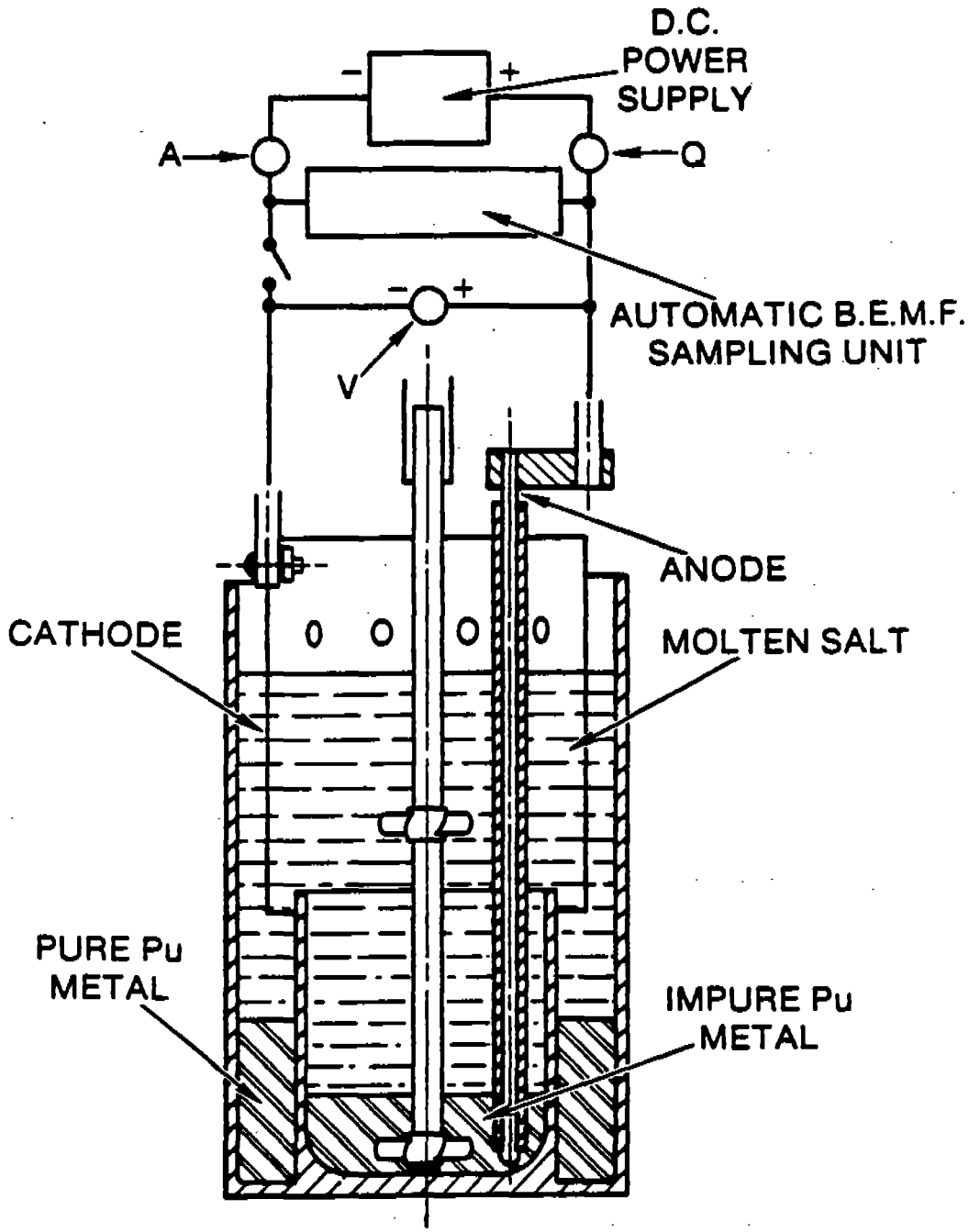

Fig. 21. Los Alamos ER cell.

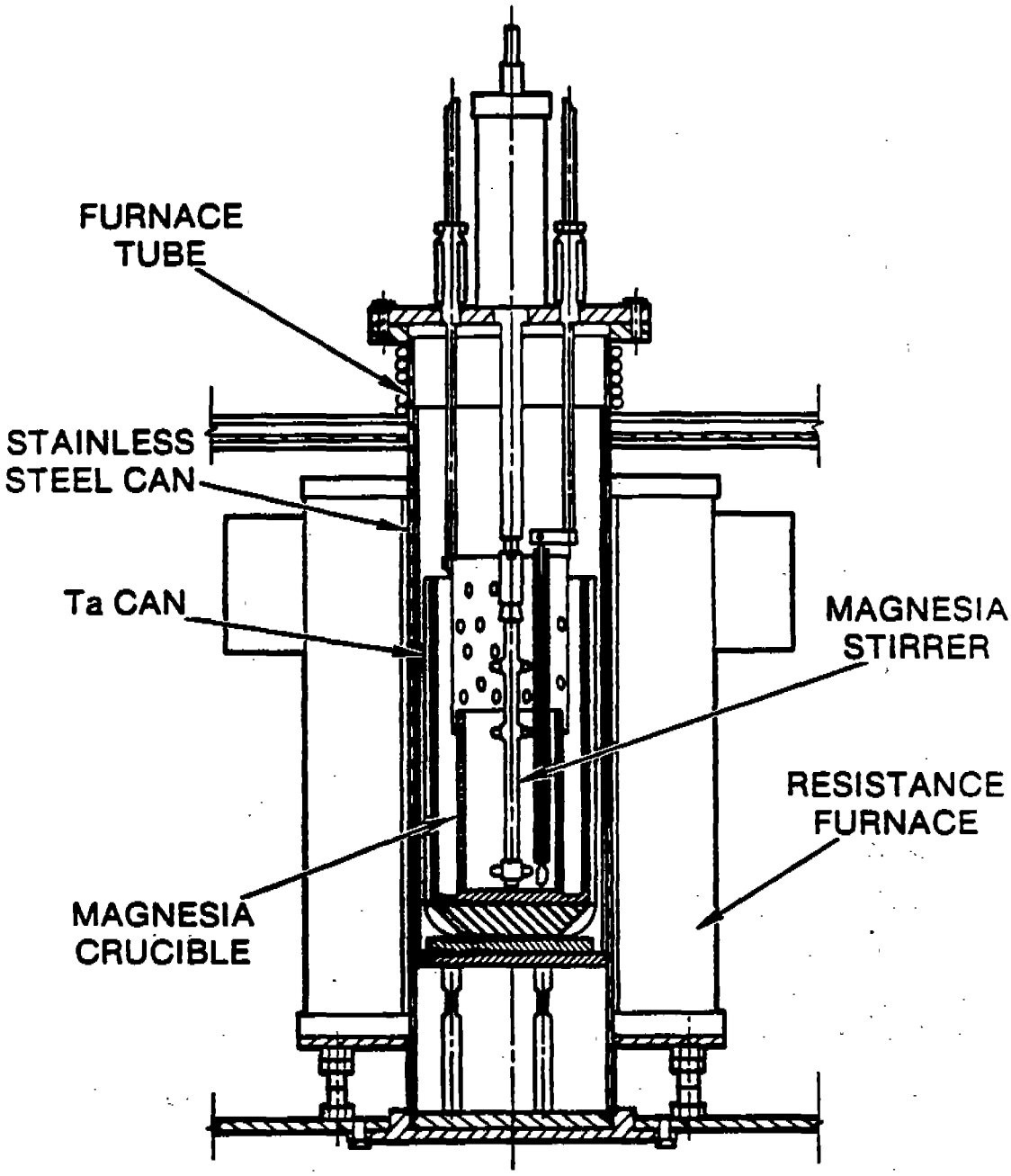

Fig. 22. ER equipment, 6-kg scale.

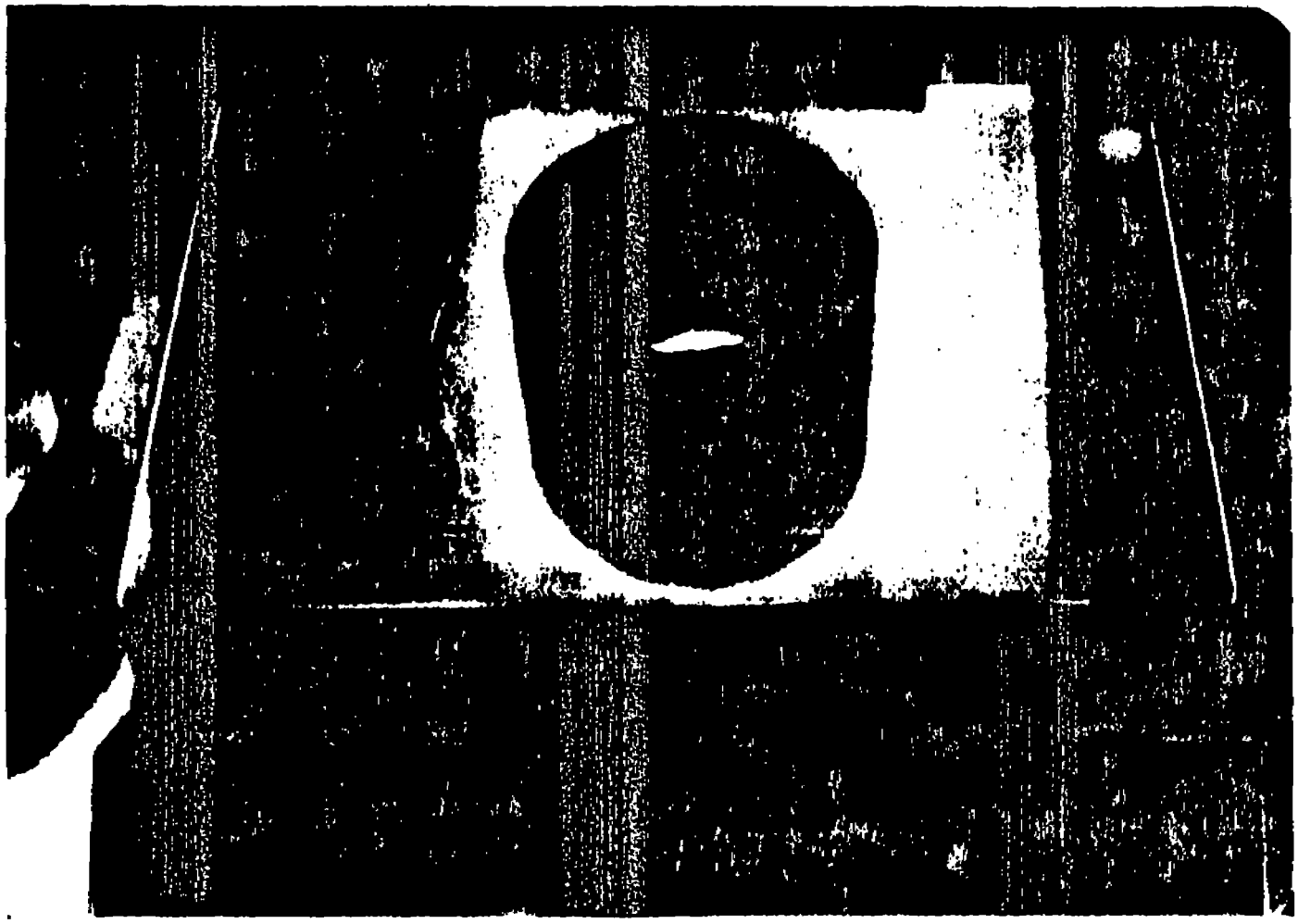

Fig. 23. Plutonium product ring from ER.

TABLE IV

BEHAVIOR OF IMPURITY ELEMENTS IN ER

Element	Concentration (g Element/ 10^6 g Pu) Feed	Product	Location Where Element Is Concentrated
Ir	4,500	100	---
Ni	1,000	<0.5	Anode
Cu	500	<1.5	Anode
Ta	5,000	80	Anode
Pb	2,000	<0	---
Fe	25,000	20	Anode
Si	320	<5	Anode
Cr	340	<5	Anode
Ga	10,000	<25	Anode
Zn	---	---	Anode
Mn	70	<2	---
Ti	15,000	10	---
Al	2,700	<5	Anode
U	330	<20	Anode
Zr	10,000	14	---
Th	1,300	10	Anode
Pu	---	---	---
Ce	527	<25	Electrolyte
Am	850	82	Electrolyte

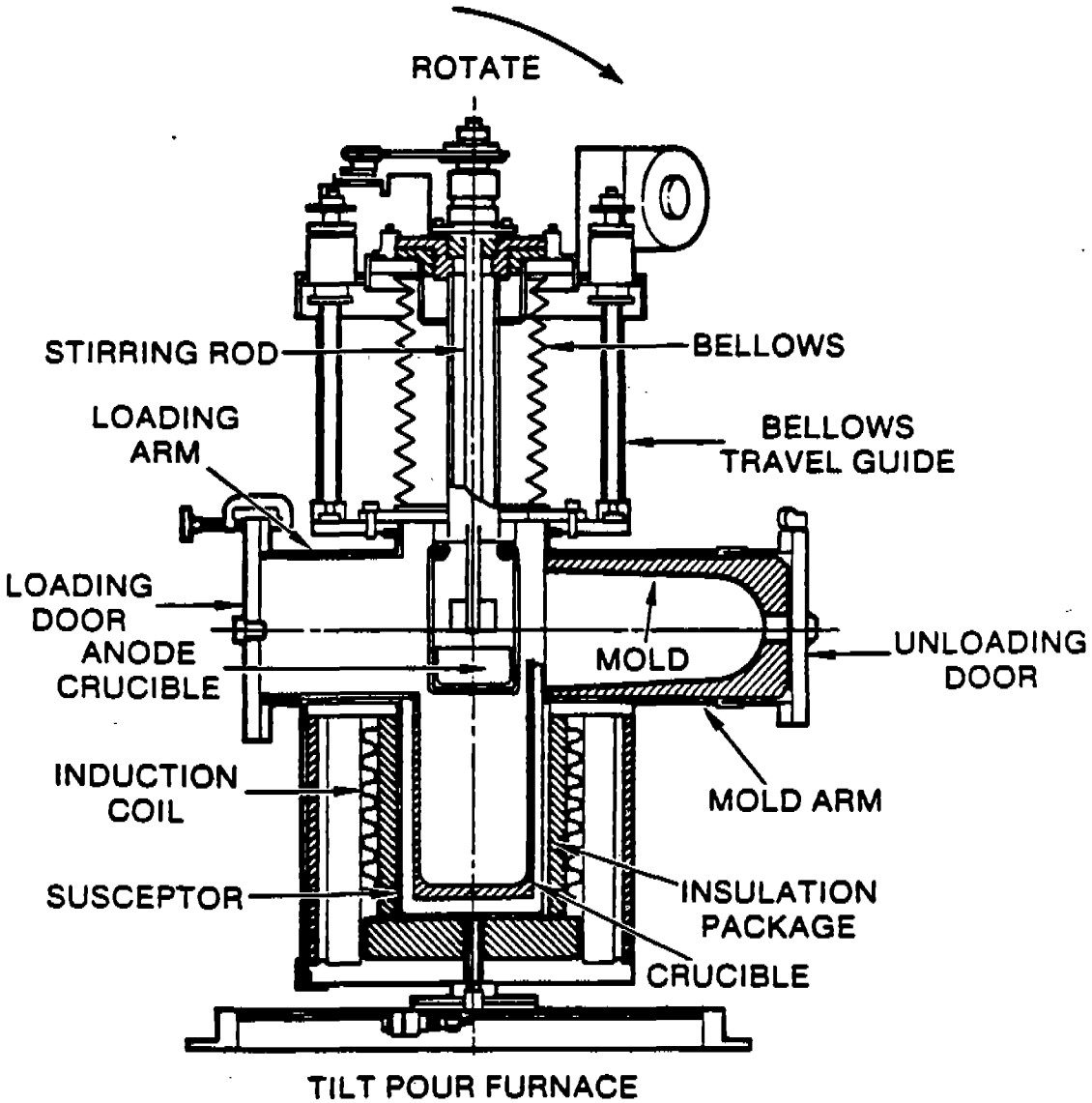

Fig. 24. Schematic of RFP's tilt-pour ER furnace.

In the pyroredox process, workers initially polish the spent anode with calcium to ensure that all the plutonium is present as metal.[62] They then oxidize the metal to plutonium(III) with $ZnCl_2$ dissolved in KCl. All elements more active than zinc will be oxidized into the salt phase. This process forms a zinc button that may be discarded. The technicians then mix the salt with a $Ca/CaCl_2$ salt to reduce plutonium and all elements less active than calcium. The reaction product is a salt phase above a two-phase button. The salt phase is mechanically separated and discarded. The bottom, denser metal phase is composed of plutonium and small quantities of calcium and zinc. The upper phase is typically 50% plutonium with the remainder being primarily zinc. Several buttons are allowed to coalesce at 850°C for 6 h to separate the ingots into a plutonium-rich lower phase suitable for ER and a less-pure upper phase that is recycled to the oxidation step.

Recovery operations treat the electrolyte salt from ER, which contains up to 8% of the feed plutonium and any elements more active than plutonium (such as americium), by salt-stripping to recover the plutonium. Operators add cacium to the salt in a DOR crucible and heat the mixture to 850°C, stir it, and allow it to cool. The metal product is recycled to ER. Aqueous methods for recovery leach crucible shards with HCl to recover plutonium. If plutonium from the residues is included in the calculation, recovery yields are quite high.

Since facilities first adopted ER in 1962, the process has produced large quantities of metal with greater than 99.96% purity. Once-through yields, particularly in conjunction with DOR and casting, are rather disappointing, and investigators are conducting additional research.[63]

IV. WASTE MANAGEMENT

Solution processing technologies discussed in this report, as well as other processing technologies, produce both liquid and solid wastes that

must be disposed of in an acceptable manner. We will now discuss methods of dealing with these wastes.

A. Liquid Wastes

The evaporator process is the first step in the waste management stream for all solutions that can be discarded. Feed for this process consists of effluent (approximately 7M HNO_3) generated by the ion-exchange columns. This solution contains plutonium concentrations from several milligrams to 0.5 g/ℓ and is processed in one of two evaporators. An evaporator run usually concentrates 600 ℓ of solution to about 20 ℓ, designated bottom. The distillates from this process contain relatively low plutonium concentrations (usually below 7×10^7 (counts/min)/ℓ total alpha) and are discarded to a final waste-treatment facility. Technicians cool the bottoms, separate the salts by supernate filtration, and sample the filtrate for plutonium to ensure it may be discarded. If the sample results are acceptable, the filtrate (20 ℓ) is fixed in cement for disposal. The salts are also sampled for plutonium to establish criteria for discard. Following assay, workers place the salts in a PVC-lined drum and send them to a 10-yr retrievable storage. Another source of solutions is the oxalate filtrates, which are handled in the same manner as the effluents. A reduced distillation rate, however, compensates for the reactivity of the oxalate filtrate, which contains $NH_2OH \cdot HNO_3$.

Waste management is also responsible for all caustic solutions that are generated by the various head-end and purification sections. At present, facilities filter, sample, and assay these solutions to determine the need for further processing. If the filtrates meet the discard criterion ($\leq 5 \times 10^9$ (counts/min)/ℓ total alpha), the filtrates are transferred to the waste management facility.

A low-level-waste facility (Fig. 25) provides further treatment of the acid distillates and caustic solutions. The means of transfer is a gravity-flow stainless steel pipe encapsulated in PVC plastic. The wastes

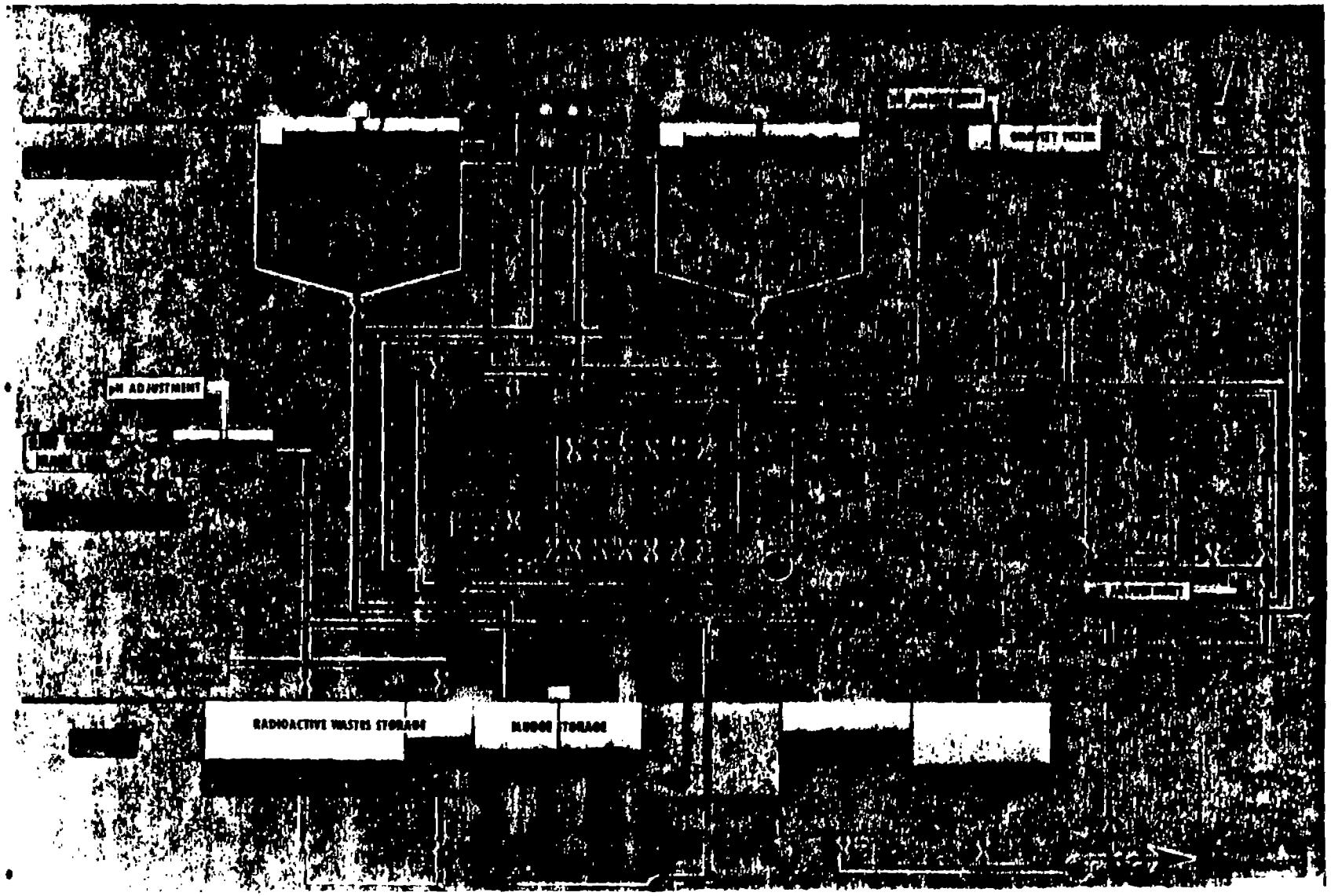

Fig. 25. Liquid Waste Treatment Facility TA-50 at Los Alamos National Laboratory.

collect in two 11,000-ℓ storage tanks located in a below-grade vault. The waste treatment at this facility includes the neutralization, chemical precipitation, settling, clarification, sand filtration, sludge collection, and solidification of sludges by addition of portland cement. Operators discard the effluent if the gross alpha activity is less than 4,000 d/m/ℓ; if it is not, the effluent is recycled through the plant. Development of the TRUEX process for HNO_3 systems has been concerned with the removal of plutonium and americium from Hanford TBP-based solvent-extraction raffinates. Experimental work by R. A. Leonard and associates[50] of Argonne National Laboratory has attained levels of <10 nCi/g (TRU elements). Extraction of 0.25M CMPO-0.75M TGP in CCl_4 produced a raffinate containing 2 nCi/g. Development of this potentially important and large-scale process continues.

B. Solid Wastes

Plutonium-contaminated solid wastes can be divided into TRU waste, >100 nCi Pu/g, and low-level waste, <100 nCi Pu/g.[82]

The Waste Management Group retrievably stores solid TRU defense wastes above grade on asphalt pads and covers them with layers of wood, plastic sheet, and earth. Currently, operators must certify the defense wastes to meet the WAC for mandatory disposal at WIPP.[2] The WIPP facility is scheduled to receive its first waste shipments in 1989.

1. Process Residues. Immobilization of process residues in cement is a common method to ensure that solution and fine-particulate-containing waste will meet the WIPP WAC. Materials to be immobilized include solutions, sludges, organic liquids, processing residues, filter media, salts, ion-exchange resins, and nuclear materials such as americium oxide.

Often the immobilizing agent is portland cement mixed in a screw mixer, jet mixer, pug mill, or tumbling drum. The cement paste drops into a drum to set and cure. Several facilities use gypsum cement to immobilize

organic liquid waste that is premixed with water and an emulsifier. Los Alamos performs the mixing directly in a 55-gal. drum.

At Los Alamos, the chloride and evaporator bottoms solutions provide the water for the immobilization of the solid process residues with gypsum cement. Sodium hydroxide solutions (NaOH) neutralize the strongly acidic solutions into a pH range of 2-4. Technicians transfer the neutralized solution into a 55-gal. drum and add cement as the mixture is stirred with an air motor for a few minutes. Most solids are added near the end of the stirring. Americium oxide is stirred manually into the paste afterwards to prevent the spread of high-gamma-emitter material to the stirring equipment and the glove box. The system will employ in-drum stirring for several reasons:[83] (1) the operator can observe the mixture during stirring and control the time and rate of stirring to match the characteristics of the highly variable feed solutions; (2) if the operator judges it necessary to initiate the setting reaction, set-accelerator material can be added to the mix while stirring is continued; (3) the cleanup of mixing equipment is simpler (4); a flash set in the mixing equipment will not force a difficult cleanout of a frozen mixer; (5) finally, should the mix not set up, remixing can occur right in the drum.

Gypsum cement is the fixing agent of choice for the following reasons:[70] (1) it has a possible higher volume efficiency (70% vs 35% for portland cement); (2) it provides an optimal pH of 3-5 for setting (This setting requires less NaOH solution for neutralization; also, the acidic pH minimizes evaporator waste-solution release of ammonia that forms NH_4NO_3 particulates in the ventilation ducts and plugs the ventilation system filters.); (3) it demonstrates an ability to immobilize organic liquids when used with an emulsifier; and (4) it shows a tendency to reabsorb any water layer formed on the surface of the setting cement. (A common disadvantage for portland cement is the presence of free liquid in a drum after setting occurs.)

2. Combustibles and Noncombustibles. Solid residues not requiring immobilization consist of common combustibles and noncombustibles. Combustible wastes include paper, wood, rags, plastics, and graphite crucibles. Typical noncombustibles are metal valves, tubing, pipe, furnace tubes, tools, cans, glass, fiberglass, ceramics, and leaded dry-box gloves. These materials normally meet the WIPP WAC without further treatment, although additional processing may significantly reduce the volume of waste transported to WIPP.

There is a current plan to segregate and burn much of the combustible waste from the Los Alamos Plutonium Facility in the Waste Management Group's controlled air incinerator.[84] The resulting ash will be fixed in cement. To date, we have attempted only trial runs with lightly contaminated waste.

In addition bulky nonroutine waste items such as glove boxes will be cut up in the Waste Management Group's Size Reduction Facility if the items cannot be decontaminated to less than TRU levels.

Some of the solid wastes will probably require other types of processing to render them certifiable to WIPP. For example, salts and crucibles containing pyrophoric metals such as sodium or potassium will require roasting in air for conversion to oxides or treatment with lead chloride to form the chloride salts.[85]

Finally there are special-case wastes whose disposition has not yet been clarified. An example is HEPA filters. They can contain unacceptable quantities of particulate matter. The WAC Certification Committee is still evaluating whether the particles can be entirely released during transportation or in an accident. If the particles are mostly trapped, then the filters may be certified; if the particles can be mostly released, the filter media will be removed from the frame and fixed in cement.

V. EMERGING TECHNOLOGIES

The handling of plutonium scrap and waste is labor intensive, particularly in processing secondary scrap materials that are generally lean in plutonium content and quite often contain contaminants that aggravate the scrap-handling problems. The following are some of the many challenges for evolving technologies:

- reduce secondary scrap generation,
- reduce waste generation including both the bulk weight and plutonium content,
- improve process and system yield,
- reduce personnel radiation exposure,
- become more cost effective, and
- improve accountability and safeguards.

The approaches taken to meet these challenges range from making subtle evolutionary changes to existing processes to making revolutionary approach changes to material processing. Probably the most significant efforts, in terms of overall long-term payoff, are those approaches aimed at stopping the generation of scrap and waste.

Automation and robotics will most certainly play an important role in defining the direction of new technology. But automation and robotics are not treatment technologies within themselves. They do represent outstanding tools to be used in improving our material handling, accountability, and safeguards, as well as in reducing the radiation exposure to personnel. Many researchers believe that automation and robotics will slowly become the main support activity for all process changes. Numerous projects aimed at automated handling are under way in facilities across the nation. As an example, in the plutonium-scrap processing facility at RFP in Colorado, a large stacker-retriever robot system is the primary means of accessing vault storage. Workers are installing a similar but much smaller stacker-retriever robot in a new vault at the plutonium facility at the Los Alamos National Laboratory.

Robots such as these can be coupled to computer systems and can thus become the heart of an accounting and inventory system. These functions can now take place with very high reliability and with little or no radiation exposure to personnel.

Vaults are not the only place where robots are demonstrating their usefulness. A new pick-and-place robot has been installed in the plutonium analytical laboratory at the Los Alamos National Laboratory. The robot works with the computer system to perform a variety of sample-preparation, dissolution, dilution, and data-compilation steps. Automation is beginning to move onto the working floor as well.[86,87] Automated NDA and bagout systems will replace the operator in performing these tedious, repetitive, and often high-exposure operations.

Computerization is rapidly becoming a second major new support activity appearing in the work place. The low price and compact nature of the new computers have made them highly desirable for data-compilation purposes. Indeed, voice-actuated data sheets preclude the need for personnel to punch the keyboard. Computers coupled with NDA evaluation equipment can also function as process-control systems. With the advent of more sophisticated processing techniques high-quality rapid-evaluation techniques are essential to avoid process upsets.

The third major evolutionary change that will become an essential tool in future technology is at-line or on-line analysis. Many of the new approaches concern NDA techniques. Gamma-ray counting with multichannel analyses can provide near-real-time analysis in continuous or semicontinuous systems. In processing steps such as solvent extraction, continuous dissolution, and ion exchange, extents of reaction are sometimes difficult to access. On-line NDA techniques will automatically determine column breakthrough. Destructive, wet chemistry techniques will begin to be integrated into the actual process operations to provide at-line process control. Techniques such as inductively coupled plasma spectroscopy can process a sample in a matter of minutes, thus providing impurity

information on a near-real-time basis. Coupling the results of the analysis with other automated aspects of process systems will provide enhanced process control.

A major aspect of technology improvement involves more than just modifications to existing processes. Opportunities to make significant changes in processing exist in the actual process chemistry and process-engineering areas. Researchers are presently investigating some of the following areas:

- Enhanced Dissolution. As noted earlier, recovery of plutonium from highly refractory plutonium oxide is a severe challenge to conventional aqueous processing. At Los Alamos, research has found that a new approach to the problem is the use of a superacid such as HF/SbF_8.[88] This reagent gives complete dissolution of refractory plutonium oxide in a practical time frame. Subsequent solvent distillation and recycle are an economical aspect of this experimental procedure. The fluoride residue is then amenable to either PuF_6 volatility techniques or to conventional procedures such as HNO_3-$Al(NO_3)_3$ dissolution and subsequent plutonium purification by solvent extraction or nitrate anion exchange. The superacid portion of the recovery procedure would add little to waste-stream volumes.

- Low-Temperature Fluorination. Recent work at Los Alamos has shown that a new fluorinating agent, FOOF, will produce PuF_6 at low temperatures.[20] FOOF can be generated from oxygen and fluorine mixtures by (1) ultraviolet photolysis, (2) microwave discharge, or (3) an even newer technique involving thermal dissociation of F_2. In a FOOF mixture, the two species identified to date are O_2F_2 and O_2F, the latter being a very reactive intermediate.[89] Although fluorine can produce the volatile compound PuF_6 as well, producing and delivering high concentrations of fluorine atoms to reactive sites is very difficult. Other potential applications for FOOF include new synthetic methods, surface passivation, and treatment and decontamination of plutonium-containing materials and equipment.

• Membrane Separation. A neglected area of aqueous materials processing has been thin-film membranes and their potential for metal ion separation.[90] Recent laboratory results have shown that, in principle, membrane techniques using practical equipment sizes can recover the actinide metal ions to well below 1 ppm.[91] Membrane development itself is starting to be a growth area for actinide separations involving (1) polymeric membrane development for metal ion separations, (2) modified concepts of supported liquid membranes, and (3) polymeric membranes containing covalently bonded, actinide-specific chelating agents. A major challenge for these endeavors will be the removal of plutonium and americium from acidic waste streams to the very low level required for discard to final waste processing. Currently, evaporation produces distillates with these low activity levels, but the concentrated residues may contain gram amounts of plutonium and americium that require immobilization in cement.

• Molten Salt/Molten Metal Redox Systems. Molten electrochemical techniques provide the capability to study and characterize complex chemical reactions in solution. In-depth application of many of these techniques to actinide chemistry in molten salts has yet to be completed, but the promise of a better understanding of electrode reactions in various molten-salt electrolytes may completely alter current actinide processing systems. In addition to improving the efficiency of plutonium purification by ER, intermediate purification and separation operations could benefit by proper application of electrolytic processes. Separation of impurities currently possible only through aqueous techniques could be completed in fewer steps, generating much less residue and achieving faster turnaround of product metal through electrochemical applications. Integration of electrochemical processing coupled with enhanced engineering automation will definitely play an important role in the future of actinide molten-salt processing and purification, as will computer monitoring and control.

• Integrated Reduction/Purification. Processing spent DOR salts, electrorefining liquid anodes, and generating and using plutonium trichloride ($PuCl_3$) are intended to lead to a system in which the oxide could be reduced to metal and electrorefined in the same equipment, the salt could be regenerated and reused, and the product metal could maintain the same high standards as our current electrorefined metal. Experts are investigating the use of $PuCl_3$ for the removal of americium to help maintain the purity of the extracted metal and for the potential of single-pass extraction of metals with very high americium content. The trichloride is also of interest for the introduction of the ionic plutonium species into electrolytic operations. Additional work is studying the use of reference electrodes in molten-salt systems to more fully understand and control the electrochemical processes occurring during the purification of plutonium and the subsequent recovery of pyrochemically generated residues. By combining the appropriate features of all of this work, researchers may be able to design and build a cell that has oxide as the feed and pure metal as the product and that generates a residue for discard at a fraction of the current residue-generation rate.

Regardless of where new technologies guide the processing of plutonium-bearing scrap and the handling of wastes, administrative issues will become a much more dominant driving force. These issues will most certainly involve aspects of environmental control, safeguards, material control and accountability, health and safety, and human reliability. These issues will predominately be politically motivated and implemented. The true challenge for both existing and emerging technologies will be to successfully address the administrative issues while simultaneously promoting safer, better, and more cost-effective processing.

ACKNOWLEDGMENTS

From reading this chapter you will realize the historical significance of plutonium processing technology. The industry is very young compared with other inorganic processing industries. As a result, many of the original processing approaches are still in use today in some fashion. It is therefore necessary to recognize all of the original pioneers in the plutonium business for their contributions in establishing the technology base. In line with this acknowledgment, the authors apologize to all researchers whose specific work has not been cited here. The chapter was intended to highlight the status of plutonium processing and waste management. We encourage all readers to inquire further for in-depth processing information.

Finally, the authors would like to acknowledge Brian Thompson for editing and the staff of IS-12 for preparing all the illustrations. The authors would especially like to acknowledge Marion Harris for typing and coordinating the material.

REFERENCES

1. L. E. Kusler, "Proposed Method for Calculating Economic Discard Limits for Weapons-Grade Plutonium," U.S. Department of Energy, Office of Nuclear Material Production report, NMP 86-1 (1986).

2. "TRU Waste Acceptance Criteria for the Waste Isolation Pilot Plant," Westinghouse Electric Corporation report WIPP-DOE-069, Rev. 2., UC-70 (1985).

3. E. A. Hakkila, C. C. Thomas, Jr., D. B. Smith, C. A. Ostenak, and R. G. Gutmacher, "Materials Management in an Internationally Safeguarded Fuels Reprocessing Plant," Los Alamos Scientific Laboratory report LA-8042, Vol. III, Appendix K, "Conventional Measurement Techniques" (1980).

4. E. L. Christensen and W. J. Maraman, "Plutonium Processing at the Los Alamos Scientific Laboratory," Los Alamos Scientific Laboratory report LA-3542 (1969).

5. A. E. Nixon, B. J. McKerley, and E. L. Christensen, "Plutonium Scrap Processing at the Los Alamos Scientific Laboratory," Los Alamos National Scientific Laboratory document LA-UR-80-835 (1980).

6. B. J. McKerley and R. L. Nance, "Rotary Calcination of Incinerator Ash," Los Alamos National Laboratory document LA-UR-81-1447 (1981).

7. J. L. Long and C. J. Smith, "Unstable Material Formed by Reacting Leaded Glove Box Gloves with Nitric Acid," Rockwell International report RFP-2648 (1977).

8. J. J. Balkey, R. L. Nance, and B. J. McKerley, "Sand, Slag, and Crucible Processing at Los Alamos National Laboratory - A Process Technology Review," Los Alamos National Laboratory document LA-UR-86-1475 (1986).

9. W. Meininger (Rockwell International) and J. J. Balkey, (Los Alamos National Laboratory), private communication.

10. A. R. Kazanjian and J. R. Stevens, "Dissolution of Plutonium Oxide in Nitrid Acid at High Hydrofluoric Acid Concentrations," Rockwell International report RFP-3609 (1984).

11. O. K. Tallent and J. C. Mailen, "Study of the Dissolution of Refractory PuO_2 in Nitric - Hydrofluoric Acid Dissolvents at 100°C," Nucl. Technol. 32, 167-175 (1977).

12. C. W. Bjorklund and E. Staritsky, "Some Observations on the Reactivity of Plutonium Dioxide," Los Alamos Scientific Laboratory report LA-1869 (1954).

13. R. D. Baker, "Preparation of Plutonium Metal by the Bomb Method," Los Alamos Scientific Laboratory report LA-473 (1946).

14. R. D. Baker and W. J. Maraman, "Calcium Reduction of Plutonium Halides to Metal," in Extractive and Physical Metallurgy of Plutonium and Its Alloys, W. D. Wilkinson, Ed., (Interscience Publishers, Inc., New York, 1960), pp. 43-59.

15. L. J. Mullins, D. C. Christensen, and B. R. Babcock, "Fused Salt Processing of Impure Plutonium Dioxide to High-Purity Plutonium Metal," Los Alamos National Laboratory report LA-9154-MS (1982).

16. G. A. Burney and F. W. Taber, "Precipitation of Plutonium Trifluoride," Ind. Eng. Chem. Process Des. Dev., 4, 28 (1965).

17. D. A. Orth, Ind. Eng. Chem. Process Des. Dev. 2, 121 (1963).

18. R. M. Greimetz and D. H. Neal, "Plutonium III Oxalate Precipation and Calcination Process for Plutonium Nitrate to Oxide Conversion," Rockwell International report RFP-2603 (1980).

19. J. A. Porter and A. E. Symonds, Jr., "Preceiptation of Plutonium III Oxalate and Calcination to Plutonium Dioxide," E. I. du Pont de Nemours & Company report DP-981 (november 1965).

20. J. G. Malm, P. G. Ellerand, and L. B. Asprey, "Low Temperature Synthesis of Plutonium Hexafluoride using Dioxygen Difluoride," J. Am. Chem. Soc. 106, 2726 (1984).

21. J. K. Dawson and R. M. Elliott, British report AERE-C/R-1207 (1953).

22. G. R. Waterbury, R. M. Douglass, and C. F. Metz, "Thermogravimetric Behavior of Plutonium Metal, Nitrate, Sulfate, and Oxalate," Anal. Chem. 33, 1018 (1961).

23. J. F. Facer, Jr., and K. M. Harmon, "Precipitation of Plutonium IV Oxalate," United States Atomic Energy Commission report HW-31186 (1954).

24. K. M. Harmon and W. H. Reas, United States Atomic Energy Commission report HW-49597-1 (1957).

25. G. T. Seaborg, J. J. Katz, and W. H. Manning, "The Transuranium Elements," Natl. Nucl. En. Ser., Div. IV, 14B, (McGraw Hill Book Co, New York, 1949).

26. J. A. Leary, A. N. Morgan, and W. J. Maraman, "Plutonium Peroxide Precipitation," Ind. Eng. Chem. 51(1) (1959).

27. L. L. Martella, M. T. Saba, and G. K. Fufubara, "Factors Affecting Plutonium Peroxide Liquefaction During Calcination," Rockwell International report CRD-82-083 (1982).

28. J. L. Ryan and E. J. Wheelwright, "Recovery and Purification of Plutonium By Anion Exchange In Nitric Acid," United States Atomic Energy Commission report HW-55893 (1959).

29. S. F. Marsh and T. D. Gallegos, "The Influence of Plutonium Concentration and Solution Flow Rate on the Effective Capacity of Macroporous Anion Exchange Resin," Los Alamos National Laboratory report LA-10990 (1987).

30. D. B. James, "The Processing of Plutonium by Ion-Exchange: I. The Concentration Dependence of Distribution Coefficients on Dowex 1 × 4 From 7M Nitric Acid," J. Inorg. Nucl. Chem. 25, 711-718 (1963).

31. S. F. Marsh, "Improved Recovery and Purification of Plutonium at Los Alamos Using Macroporous Anion Exchange Resin," Los Alamos National Laboratory report LA-10906-MS (1987).

32. G. S. Barney, "A Kinetic Study of the Reaction of Plutonium IV With Hydroxylamine," Atlantic Richfield Hanford Company report ARH-SA-207 (March 1975).

33. J. E. Keane, Jr., and J. D. Navratil, "Redox Behavior of Plutonium in Nitric Acid Process Solutions," Rockwell International report RFP-3719 (1985).

34. S. F. Marsh and T. D. Gallegos, "Chemical Treatment of Plutonium with Hydrogen Peroxide Before Nitrate Anion Exchange Processing," Los Alamos National Laboratory report LA-10907-MS (1987).

35. S. F. Marsh, "The Effect of Fluoride and Aluminum on the Anion Exchange of Plutonium from Nitric Acid," Los Alamos National Laboratory report LA-10999-MS (1987).

36. S. F. Marsh and M. C. Miller, "Plutonium Process Control Using an Advanced On-line Gamma Monitor for Uranium, Plutonium, and Americium," Los Alamos National Laboratory report LA-10921-MS (1987).

37. N. G. Pope and S. F. Marsh, "An Improved Computer-Based, On-Line Gamma Monitor for Plutonium Anion Exchange Process Control," Los Alamos National Laboratory report LA-10975-MS (1987).

38. P. Cloessner, "Evaluation of On-line Passive Gamma Analyzer for Plutonium in Purex Solutions," Savannah River Laboratory, 11th Actinide Conference, Lawrence Livermore National Laboratory (1987).

39. L. W. Gray, "The Interactions of Hydrazine, Ferrous Sulfamate, Sodium Nitrite and Nitric Acid in Nuclear Fuel Processing Solutions," Nucl. Tech. 40, 185-193 (1972).

40. D. B. James, "Anion Exchange Processing of Plutonium," Los Alamos Scientific Laboratory report LA-3499 (1967).

41. W. Van Slyke, G. Jansen, and W. H. Swift, "Thermal Effects in Anion Exchange Resin-Nitric Acid Systems," Pacific Northwest Laboratory report BNWL-114 (August 1965).

42. A. C. Muscatello, M. E. Killion, and D. C. Fisher, "Plutonium Recovery from Direct Oxide Reduction and Electrorefining Residue Salts by Chloride Anion Exchange," Rockwell International report PPC 86-112 (December 1986).

43. A. C. Muscatello, M. E. Killion, and D. C. Fisher, "Aqueous Methods for Recovery of Plutonium from Pyrochemical Residues," Rockwell International report RFP-4106 (May 1987).

44. D. B. James and E. L. Christensen, "The Processing of Plutonium by Ion Exchange II. The Anion-exchange Separation of Plutonium and Thorium," Trans. Am. Nucl. Soc. 5(2), 459.

45. D. G. Clifton and T. W. Blum, "Thorium-Plutonium Chemical Separation Process," Los Alamos National Laboratory report LA-9611-MS (1983).

46. K. W. Fife, M. H. West, R. L. Nance, S. L. Yarbro, "An Integrated Pyrochemical Aqueous Procedure for Recovering Plutonium From Spent MSE Salts," Los Alamos National Laboratory poster LA-UR-86-1766 (1986).

47. R. L. Nance, L. J. Brede, C. W. Mills, and S. L. Yarbro, "Development of a Precipitation Process for Recovery of Pu, Am from MSE Salts," Los Alamos National Laboratory poster LA-UR-86-1477, presented at 1986 Actinide Conference, Los Alamos, NM (1986).

48. G. P. Horwitz, H. Diamond, K. A. Martin, and R. Chiarizia, "Extraction of Americium (III) from Chloride Media by Octyl (Phenyl) - N, N - Dūsobytylcarbamoylmethylphosphine Oxide," Solvent Extr. Ion Exch. (to be published).

49. R. A. Leonard and M. J. Steindler, "Summary Report on the Development of Annular Centrifugal Contractors," Argonne National Laboratory report ANL-82-21 (1982).

50. R. A. Leonard, G. F. Vandegrift, E. C. Gay, D. R. Fredrickson, C. S. Sabau, D. J. Chaiko, L. Burris, et al., "The Truex Process for Recovery of Plutonium and Americium from Nitric Acid Waste Solutions--Continuing Development Studies, FY 1986," Argonne National Laboratory report ANL-87-3 (1987).

51. G. Vandegrift, R. Leonard, and L. Reichley-Yinger, "Purex-Truex Recovery of Pu and Am from Chloride Salt Wastes," Chemical Technical Division presentation, Argonne National Laboratory (1987).

52. J. M. Cleveland, The Chemistry of Plutonium (Gordon and Beach, New York, 1970).

53. J. A. Leary, et al., "Pyrometallurgical Purification of Plutonium Reactor Fuels," in Proceedings of the Second United-Nations International Conference on the Peaceful Use of Atomic Energy, Vol. 17 (United Nations, Geneva, 1958), pp. 376-382.

54. R. D. Baker, "Preparation of Uranium Metal by the Bomb Method," Los Alamos Scientific Laboratory report LA-472 (1946).

55. J. A. Leary and L. J. Mullins, "Practical Applications of Thermodynamics to Plutonium Process Reactions at High Temperature," in Thermodynamics, Vol. 1 (International Atomic Energy Agency, Vienna, 1966), pp. 459-471.

56. J. G. Reavis, J. A. Leary, and W. J. Maraman, "Method for Obtaining Plutonium Metal from its Trichloride," U.S. Patent No. 3,049,423 (1962).

57. M. H. West, Los Alamos National Laboratory, private communication (1986).

58. R. P. DeGrazio, "A Prototype Hydriding Apparatus," U.S. Energy Research and Development Agency report RFP-2340 (1975).

59. M. S. Coops, J. B. Knighton, and L. J. Mullins "Pyrochemical Processing of Plutonium," in Plutonium Chemistry, W. T. Carnall and C. R. Coppin, Eds. (American Chemical Society, Washington, 1983), pp. 381-408.

60. J. G. Reavis, "Fused Salt Oxidation-Reduction Process for Plutonium Recycle Fuel," presented at Fall AIME Meeting, Detroit, Michigan (1961).

61. J. G. Reavis and J. A. Leary, "Non-Aqueous Dissolution of Massive Plutonium," U.S. Patent No. 2,886,410 (1959).

62. J. A. McNeese, D. F. Bowersox, and D. C. Christensen, "Recovery of Plutonium by Pyroredox Processing," Los Alamos National Laboratory report LA-10457-MS (1985).

63. D. C. Christensen and L. J. Mullins, "Plutonium Metal Production and Purification at Los Alamos in Plutonium Chemistry," in Plutonium Chemistry, W. T. Carnall and C. R. Coppin, Eds. (American Chemical Society, Washington, 1983), pp. 369-380.

64. C. L. Sohn, D. C. Christensen, and C. W. Thorn, "Enhanced Production of Plutonium Metal Using PuO_2 in the PuF_4/Bomb Reduction Process," Los Alamos National Laboratory document LA-UR-82-1230 (1982).

65. L. J. Mullins and C. L. Foxx, "Direct Reduction of $^{238}PuO_2$ and $^{239}PuO_2$ to Metal," Los Alamos National Laboratory report LA-9073 (1982).

66. D. A. Wenz, I. Johnson, and R. D. Wolson, "$CaCl_2$-Rich Region of the $CaCl_2$-CaF_2-CaO System," J. Chem. Eng. Data 14, 250-252 (1969).

67. J. B. Knighton, R. C. Auge, J. W. Berry, and R. C. Franchini, "Molten Salt Extraction of Americium from Molten Plutonium Metal," Rockwell International report RFP-2365 (1976).

68. J. B. Knighton and R. K. Steunenberg, "Distribution of Transuranium Elements Between Magnesium Chloride and Zinc-Magnesium Alloy," J. Inorg. Nucl. Chem. 27, 457-462 (1965).

69. J. A. Leary and L. J. Mullins, "On Divalent Americium in Molten Salt and Plutonium Systems," J. Chem. Thermodyn. 6, 103-104 (1974).

70. L. J. Mullins, A. J. Beaumont, J. A. Leary, "Distribution of Americium Between Liquid Plutonium and a Fused Salt. Evidence for Divalent Americium," J. Inorg. Nucl. Chem. 30, 147-156 (1968).

71. C. E. Baldwin and J. D. Navratil, "Plutonium Process Chemistry at Rocky Flats," in Plutonium Chemistry, W. T. Carnall and C. R. Coppin, Eds. (American Chemical Society, Washington, 1983), pp. 369-380.

72. J. W. Anderson and W. J. Maraman, "Plutonium Foundry Practices," Trans. Am. Foundrymen's Soc. 70, 1057-1072 (1963).

73. D. R. Harbur, J. W. Anderson, and W. J. Maraman, "Unusual Problems Encountered in Casting High Density, High Purity Plutonium," Mod. Cast. 53, 80-84 (1968).

74. L. J. Mullins, "A Review of Los Alamos Experience in Containment of Molten Plutonium and Molten Salt," Presentation for Technology Review for Molten Containment, Lawrence Livermore National Laboratory, (January 10, 1984).

75. W. W. Miner, A. S. Coffinberry, F. W. Schonfeld, J. T. Walker, et al., "Plutonium," in Rare Metals Handbook, 2nd Ed., C. A. Hampel, Ed., (Reinhold Publishing Corp., London, 1961).

76. L. J. Mullins and A. N. Morgan, "A Review of Operating Experience at the Los Alamos Plutonium Electrorefining Facility, 1963-1977," Los Alamos National Laboratory report LA-8943 (1981).

77. L. J. Mullins and J. A. Leary, "Fused Salt Electrorefining of Molten Plutonium and Its Alloys by the LAMEX Process," Ind. Eng. Chem. Process Des. Dev. 4, 394 (1965).

78. L. J. Mullins, A. N. Morgan, S. A. Apgar, III, and D. C. Christensen, "Six-Kilogram Scale Electrorefining of Plutonium Metal," Los Alamos National Laboratory report LA-9469-MS (1982).

79. J. B. Knighton and R. C. Auge, "Purification of Plutonium by Oxidation-Reduction," in "Research and Development Quarterly Progress Report, October, November, and December 1970," M. A. Thompson, Ed., Rocky Flats Plant report RFP-1638-A (1971).

80. J. B. Knighton, R. C. Auge, and J. C. Brown., "Purification of Plutonium by Oxidation-Reduction Process," Rockwell International report RFP-550 (1972).

81. J. B. Knighton and J. W. Berry, "Pyroredox Research," in "Chemistry Research and Development Annual Progress Report, November 1, 1980 to September 30, 1981," Fred John Miner, Ed., Rockwell International report RFP-3324 (1982).

82. Department of Energy Order 5820.2.

83. T. L. Rosenstiel, M. D. Joss, and R. G. Lange, "ENVIROSTONE Gypsum Cement: Solidifaction Medium for Low Level Radioactive Wastes," United States Gypsum Company, Chicago, Illinois (1983).

84. A. S. Neuls, W. E. Draper, R. A. Koenig, J. M. Newmyer, and C. L. Warner, "The Los Alamos Controlled Air Incinerator for Radioactive Waste," Vols. 1 and 2, Los Alamos National Laboratory report LA-9427 (1982).

85. H. D. Ramsey, Los Alamos National Laboratory, private communication (1987).

86. N. M. Levitz, G. J. Vogel, E. L. Carls, D. Grosvenor, B. Kullen, D. Rave, and W. Murphy, "Kilogram-Scale Production of Plutonium Hexafluoride by Fluorination in a Fluidized Bed," Trans. Am. Nucl. Soc. 11, 35 (1968).

87. N. M. Levitz, B. Kullen, D. Rave, and W. Murphy, et al., "Production of Plutonium Hexafluoride by Fluorination in the Fluidized Bed," Nucl. Appl. Technol. 6, 147 (1969).

88. G. A. Olah, G. K. S. Prakash, and J. Sommer, Superacids, (J. Wiley Sons, New York, 1985).

89. A. G. Streng, "The Oxygen Fluorides," Chem. Rev. 63, 607 (1969).

90. H. K. Lonsdale, "The Growth of Membrrane Technology," J. Membr. Sci. 10, 81 (1982).

91. J. P. Deininger, "Ion-Exchange Membrane Separations in Actinide Aqueous Processing," in "Proc. of the 1986 Plutonium/Uranium Chemical Recovery Operations Conference," October 14-16, 1986, Savannah River Plant, Aiken, South Carolina (1986).

D009 - AK7

TWCP-QP-1.1-004,R.8/IC1
Effective Date: 12/20/01

TWCP-08526

RECORDS SUBMITTAL

INSTRUCTIONS: This form is prepared by the record source when submitting individual records, batch data reports, or a records package to the RMDC Center. For records packages, a Table of Contents (TOC) must also be submitted. Each record submitted requires a complete form.

MANDATORY: ☒ To the best of my knowledge, the record(s) have no radioactive contamination.

Signature: [signature]

RECORD TYPE:

☒ TWCP ☐ Facility (C-FM) ☐ E-ET Group (including Programmatic Facility)

☐ Other: _____ ☐ UCNI ☐ Proprietary

RECORD SOURCE:

Submittal Date: 4/18/02 Z No.: 09592 Name/Org: [signature]

Originator: John Musgrove Organization: C-INC

TYPE OF RECORD/ACTION TO BE TAKEN

☒ Individual Record ☐ Batch Data Report ☐ Records Package (+ TOC)

☒ New ☐ Revision* ☐ Addition* ☐ Supersedes*

*Record Barcode Number: _____ *Review Cycle (if applicable): ☐ Yes ☐ No ☐ NA

RECORD ID NUMBER: (e.g., memo symbol number, procedure (include revision), deficiency number, batch data report number, unique record identifier if applicable):

TWCP-AK-2.1-011, R.0

Record Date: 9/20/01 Physical Page Count: 96 ☒ Single Sided ☐ Double Sided

Category Number: (from page two): 07

RECORD TITLE, SUBJECT, AND/OR KEYWORDS:

Acceptable Knowledge Summary Report for Waste Streams TA-55-43, TA-55-44, TA-55-45, TA-55-46 and TA-55-47 (LA-UR-01-4964)

RECORD CENTER USE ONLY

☒ Accepted Date: 4/18/02 ☐ Return Date: _____

Signature: [signature] Resubmitted: _____

RIDs Type: L7

(Subject to change prior to scheduled review cycle).

X-Sender: 111899@eet-mail.lanl.gov
X-Mailer: QUALCOMM Windows Eudora Version 5.0
Date: Wed, 17 Apr 2002 10:23:21 -0600
To: shannan@lanl.gov
From: Scott Robbins <srobbins@lanl.gov>
Subject: remove AK reports
Cc: pzr@lanl.gov
X-RCPT-TO: <115883@eet-mail.lanl.gov>

Hi Shannan,

Please remove the following three documents from the TWCP Doc distribution web page.

TWCP-AK-2.1-008,R.2/IC2
TWCP-AK-2.1-010,R.1/IC1
TWCP-AK-2.1-011,R.0

They have been superceded by TWCP-AK-2.1-015,R.0

Thanks,

scott

(LA-UR-02-517)

INTERIM CHANGE REQUEST

☑ TWCP ☐ WRR ☐ Other If Other, please identify: _____	**IC Number:** 1
Person Requesting this Interim Change: June Fabryka-Martin	
DOCUMENT INFORMATION	
Document Title: Acceptable Knowledge Summary Report for Waste Streams TA-55-43, TA-55-44, TA-55-45, TA-55-46, and TA-55-47	**Document No./Revision:** TWCP-AK-2.1-~~006~~ 011,R.~~1~~ 0 CJK 11/1/01
Effective Date of Current Document: 09/20/01	**Document Preparer:** John Musgrave

CHANGE INFORMATION: Please ensure the following changes are made:

Section/Page	Change:	Reason/Justification:
Section 2.0	Insert Note following the first bullet in Section 2.0: NOTE: The primary sources of waste generator information presented in the AK Information Summary are: • the "Los Alamos National Laboratory Transuranic Waste Database" maintained by the Facility Waste Operations (FWO) – Integrated Information Management (IIM) group for all TRU waste in storage at TA-54, in accordance with AP-SWO-006; • the TA-55 Waste Management System (WMS) database described in QA-TP-WMS-000.001 and in Section 7.2 of the *TA-55 Transuranic Waste Interface Document* (TWID); and • archived older versions of the TA-55 WMS database (TWCP-6988).	Respond to CBFO audit comments, by improving traceability to AK data sources.
Attachment 1	Insert new references to AK Roadmap (see attached page)	
Date changes submitted: 10/25/01	**Desired effective date for changes:** 10/26/01	

INTERIM CHANGE APPROVAL

Document Preparer: John Musgrave		Reviewer (if applicable):	
Signature: John Musgrave	Date: 10/25/01	Signature:	Date:
Site Project QA Officer: Lawrence A. Souza		LAAO (if implementing WAP requirements):	
Signature: L A Souza	Date: 10/25/01	Signature:	Date:
☑ IC Approved ☐ Major Rev. ☐ Hold for next Rev.		Do changes affect WAP data collection, data quality, or performance criteria? ☐ Yes ☑ No If yes, date of CBFO approval: _____ (documentation attached)	
Site Project Mgr/Line Mgr: P Rogers			
Signature: Pamela Rogers	Date: 10/25/01		
USQ Screener (if applicable): NA			
Signature: Greg Burghardt	Date: 10-25-01		

NOTE: Changes can be designated on the document and attached to this form.

Effective date for this interim change: 11/5/01

TWCP Record No.	Information Category Code	Information	Source	Summary	Limitations
AP-SWO-006, R.3.1	A	Describes how the TRU Waste Storage Record (TWSR) is prepared, reviewed, submitted, and entered into a TRU waste database	*Review and completion of the TWSR*	Section 8.6 describes how waste generator information submitted on the TWSR, as well as other receipt and storage information, is entered into the LANL TRU Waste Database for TRU waste stored at TA-54.	Does not contain any data. No detailed discussion of changes made in this procedure since it was first issued in June 1994 as DOP-CST17G-003,R.0. The current procedure listed here was issued April 2001.
NMT7-AP-TA55-018, R3	A	Contains waste generator information required by the LANL TRU Waste Certification Plan	*TA-55 Transuranic Waste Interface Document* (TWID)	Contains information on waste characterization, waste packaging configurations, and TRUCON codes for newly-generated TA-55 waste. Describes how waste generator information in the TA-55 Waste Management System (WMS) database is certified and maintained for waste generated at the TA-55 facility. Contains information on current and projected waste stream volumes.	Does not contain data on specific waste containers. Does not contain information for legacy waste generated prior to this document's approval. Periodically updated by TA-55.
QP-TP-WMS-000.001	B	Compilation of TA-55 waste generator information, for individual waste containers.	TA-55 Waste Management System (WMS)	Certified and current database of waste container identifiers, waste codes (e.g., IDC, RSWD, EPA HWNs), assay results, packaging dates, waste material content and generating processes for TA-55 wastes.	Controlled access, continually being updated
TWCP-6988	B	Compilation of TA-55 waste generator information, for individual waste containers.	*Archived generator's databases 95DRUM and 95ncdrum.*	Database of waste container identifiers, waste codes (e.g., IDC, RSWD, EPA HWNs), assay results, packaging dates, waste material content and generating processes for TA-55 wastes.	Archive of previous version of the TA-55 WMS; may not contain latest corrections.

TA-55 PLUTONIUM FACILITY
ACCEPTABLE KNOWLEDGE REPORT

REPORT TITLE: Acceptable Knowledge Summary Report for Waste Streams TA-55-43, TA-55-44, TA-55-45, TA-55-46, TA-55-47

REPORT NUMBER: TWCP-AK-2.1-011,R.0 (LA-UR-01-4964)

WASTE GENERATED FROM WASTE STREAMS: TA-55-43, TA-55-44, TA-55-45, TA-55-46, TA-55-47

EFFECTIVE DATE: 09/20/01

NEXT REVIEW DATE: 09/20/03

DOCUMENT PREPARER:

Tom Musgrave — 9/4/01
NAME — DATE

APPROVALS:

June Fabryka-Martin — 9/4/01
INDEPENDENT TECHNICAL REVIEWER/EDITOR — DATE

Pamela Rogers — 9/17/01
SITE PROJECT MANAGER — DATE

Sandy Warden — 9/17/01
WASTE CERTIFICATION OFFICIAL — DATE

[illegible] — 9/18/01
SITE PROJECT QA OFFICER — DATE

Andrew J. Montoya — 9-14-01
FACILITY REPRESENTATIVE — DATE

© 2001 University of California

HISTORY OF REVISIONS

Revision No.	Date	Pages Revised	Reason for Change
0	09/20/01	—	New report
IC1	11/5/01	Section 2, Attachment 1	Respond to CBFO audit comments, by improving treaceability to AK data sources.

CONTENTS

Section **Page**

ACRONYMS v

TA-55 PROCESS/STATUS (P/S) CODE INDEX vii

ACCEPTABLE KNOWLEDGE SUMMARY FOR WASTE STREAM TA-55-43 ix

ACCEPTABLE KNOWLEDGE SUMMARY FOR WASTE STREAM TA-55-44 xi

ACCEPTABLE KNOWLEDGE SUMMARY FOR WASTE STREAM TA-55-45 xiii

ACCEPTABLE KNOWLEDGE SUMMARY FOR WASTE STREAM TA-55-46 xv

ACCEPTABLE KNOWLEDGE SUMMARY FOR WASTE STREAM TA-55-47 xvii

WASTE GENERATION SUMMARY DIAGRAM xix

1.0 INTRODUCTION 1

2.0 METHODOLOGY USED TO SEARCH FOR AK RECORDS 1

3.0 DESCRIPTION OF THE WASTE STREAM 2
- 3.1 Facility and Mission 2
- 3.2 Basis, Rationale, and Assumptions Used to Delineate the Waste Streams 3
- 3.3 Waste Physical Form and Content Description 6
- 3.4 Waste Volume and Time Period of Waste Generation 7
- 3.5 Waste Stream Generation Processes 7
- 3.6 Material Inputs to the Waste Generation Process 14

4.0 DIVISION OF THE WASTE STREAM INTO LOTS 19

5.0 CORRELATIONS BETWEEN WASTE STREAMS 19

6.0 ASSIGNMENT OF WASTE MATRIX CODES 19

7.0 ASSIGNMENT OF WASTE MATERIAL PARAMETER CODES 20

8.0 ASSIGNMENT OF EPA HAZARDOUS WASTE NUMBERS 20
- 8.1 F, K, and U Listings 20
- 8.2 Toxicity Listings 21

9.0 VERIFICATION THAT IGNITABLE, REACTIVE, AND CORROSIVE WASTES WERE EXCLUDED 22

10.0 VERIFICATION THAT INCOMPATIBLE CHEMICALS WERE PROHIBITED 23

11.0 VERIFICATION THAT THERE ARE NO COMPRESSED GASES, FREE LIQUIDS, NONRADIONUCLIDE PYROPHORICS, SEALED CONTAINERS GREATER THAN FOUR LITERS IN VOLUME, OR >1% RADIONUCLIDE PYROPHORICS 24

12.0 VERIFICATION THAT THERE ARE NO POLYCHLORINATED BIPHENYLS (PCBs) IN THE WASTE STREAM 25

Section **Page**

13.0 DETERMINATION OF THE MAXIMUM NUMBER OF CONFINEMENT LAYERS PERMITTED FOR WASTE PACKAGING 25

14.0 CONFIRMATION OF AK INFORMATION FOR THE WASTE STREAM 26
14.1 Radiography Data 26
14.2 Visual Examination Data 28
14.3 Radioassay Data 29
14.4 Headspace Gas Data 32

15.0 CITED PROCEDURES AND REQUIREMENTS DOCUMENTS 32

Tables **Page**

1 Pu-238 Debris Waste Stream Volumes and Years Generated 7

2 Typical Process Feed Materials for Pu-238 Operations 15

3 Average Isotopic Content of Plutonium Material Type MT-83 16

4 Actinide Impurities in PuO_2 Fuel Lots for the Cassini Program 17

5 Assignment of Waste Codes to Pu-238 Debris Waste Streams 20

6 WMP Codes Applicable to Pu-238 Debris Waste Streams 21

7 Maximum Layers of Confinement to be Used for Pu-238 Debris Waste Streams in the Absence of More Specific Waste Characterization Data 26

8 RTR Data for Pu-238 Debris Waste Streams 27

9 Pu Isotopic Data for Pu-238 Debris Wastes 30

10 Secondary Radionuclides Detected in Pu-238 Debris Wastes 31

11 Headspace Gas Data (ppmv) for Target Analytes and Total Flammability in Pu-238 Debris Waste Streams 33

Attachments

1 Acceptable Knowledge Roadmap (12 pages)

2 LANL and TA-55 Site Maps (2 pages)

3 Generalized Process Status Diagram for Pu-238 Processes (1 page)

4 Waste Generator Forms for TRU Waste (4 pages)

5 Chemical Waste Disposal Request Form (1 page)

ACRONYMS

$^{238}PuO_2$	plutonium-238 oxide
AK	acceptable knowledge
CFR	*Code of Federal Regulations*
D	RCRA hazardous waste code for wastes with hazardous characteristics, defined in 40 CFR Subpart C, Sections 261.21 to 261.24
DL	discard limit
DOE	U.S. Department of Energy
DOR	direct oxide reduction (process, not P/S code)
DTP	detailed technical procedure
DWLS	Discardable Waste Log Sheet
EPA	U.S. Environmental Protection Agency
F	RCRA hazardous waste code for hazardous wastes from non-specific sources, defined in 40 CFR Subpart D, Section 261.31
GPHS	General Purpose Heat Source
HEPA	high-efficiency particulate air
HWN	hazardous waste number
IDC	Item Description Code
K	RCRA hazardous waste code for hazardous wastes from specific sources, defined in 40 CFR Subpart D, Section 261.32
LANL	Los Alamos National Laboratory
LLW	low-level waste
LWRHU	Lightweight Radioisotope Heater Unit
MDL	method detection limit
MEGAS	Multiple Energy Gamma Assay System
MT	material type
MWG	Milliwatt Generator
NDA	nondestructive assay
NIOSH	National Institute for Occupational Safety and Health
NMT	Nuclear Material Technology
PCB	polychorinated biphenyl
PF	Plutonium Facility
PPE	personal protective equipment
ppm	part per million
ppmv	part per million, on a volume basis
PRQL	program required quantitation limit
P/S [code]	process/status [code]
PWR	prohibited waste report
QA	quality assurance
QP	quality procedure
R&D	research and development
RCRA	Resource Conservation and Recovery Act
RD&D	research, development, and demonstration
RFETS	Rocky Flats Environmental Technology Site
RLWTF	Radioactive Liquid Waste Treatment Facility
RMDC	Records Management/Document Control

RSWD	Radioactive Solid Waste Disposal
RTR	real-time radiography
SME	subject matter expert
SRS	Savannah River Site
TA	technical area
TRU	transuranic
TRUCON	TRUPACT-II content
TRUPACT-II	Transuranic Waste Transporter-Model II
TWBIR	Transuranic Waste Baseline Inventory Report
TWCP	Transuranic Waste Characterization/Certification Project
UCL_{90}	90% Upper Concentration Limit
UCNI	Unclassified Controlled Nuclear Information
VE	visual examination
VOC	volatile organic compound
WAC	waste acceptance criteria
WIPP	Waste Isolation Pilot Plant
WIPP WAP	Attachment B, Waste Analysis Plan, to the *Hazardous Waste Facility Permit Issued to the Waste Isolation Pilot Plant* (EPA No. NM4890139088)
WPRF	Waste Profile Request Form
WODF	Waste Origination and Disposition Form

TA-55 PROCESS/STATUS (P/S) CODE INDEX

NOTE: This index indicates the main process AK summary report and report section that covers each P/S code mentioned in this report.

P/S Code	P/S Name	Process AK Summary Report and Report Section*		EPA HWN listing for Pu-238 waste**	Current Status of P/S Code
P/S codes cited in this report that may generate Pu-238 waste					
ASP	Aqueous Scrap Processing	Plutonium-238 Operations	3.5.1, Att. 4	—	Active
C1	Pu-238 Heat Source Calorimetry	Plutonium-238 Operations	3.5.2	—	Active
GPHS	General Purpose Heat Source Fabrication	Plutonium-238 Operations	3.5.2, Att. 4	—	Active
MTL	Metallography	Plutonium-238 Operations	3.5.3, Att. 4	—	Active
P1	Routine Pu-238 Heat Source Production	Plutonium-238 Operations	3.5.2, Att. 4	—	Active
PPD	Plutonium Pellet Dissolution	Special Processing	3.5.11, Att. 4	—	Inactive since 1998
R8	Routine Pu-238 Solidification	Plutonium-238 Operations	3.5.6, Att. 4	D006, D008, D009, D011 (apply only to hydroxide and oxide cake waste)	Active
R8	Recovery of Pu-238 from Sucrose Solutions	Plutonium-238 Operations	3.5.7, Att. 4	—	Inactive since 1988
RCI	Recovery of Pu-238 from Contaminated Iridium	Plutonium-238 Operations	3.5.5, Att. 4	—	Inactive since 1992
SCP	Routine Pu-238 Scrap Processing	Plutonium-238 Operations	3.5.4, Att. 4	—	Active
TDC	Thermal Decomposition of Cellulose Items	Nitrate Operations	3.5.1, Att. 4	D005, D006, D007, D008, D011	Active
WD	Welding and Decontamination for GPHS	Plutonium-238 Operations		—	Active
WS	Pu-238 Direct Oxide Reduction	Plutonium-238 Operations	3.5.8, Att. 4	D005 (applies only to salt	Active

P/S Code	P/S Name	Process AK Summary Report and Report Section*		EPA HWN listing for Pu-238 waste**	Current Status of P/S Code
				waste)	
P/S codes cited in this report that do not generate Pu-238 waste					
ED	Cascade Dissolver	Nitrate Operations	3.5.2, Att. 4	D005, D006, D007, D008, D011	Active
ITF ITF4	Impact Test Facility	Metal Operation Processes	3.5.2, Att. 4	—	Active
MPD	Cascade Dissolver	Nitrate Operations	3.5.2, Att. 4	D005, D006, D007, D008, D011	Inactive since 1996
OR	Direct Oxide Reduction	Pyrochemical Processes	3.5.2, Att. 4	—	Active
SC	Cascade Dissolver, G437	Nitrate Operations	3.5.2, Att. 4	D005, D006, D007, D008, D011	Active
SP	Scrap Dissolution, G438	Nitrate Operations	3.5.2, Att. 4	D007	Active

* Process AK summary reports: Metal Operation Processes (TWCP-AK-2.1-003), Nitrate Operations (TWCP-AK-2.1-005), Plutonium-238 Operations (this report), and Special Processing (TWCP-AK-2.1-007)

** Any debris waste containing lead (e.g., leaded gloves) is discarded as mixed TRU waste to which EPA HWN D008 is applicable.

ACCEPTABLE KNOWLEDGE SUMMARY FOR TA-55-43

Waste Stream Number and Title:	TA-55-43, Non-mixed Combustible/Noncombustible Debris Waste Containing Plutonium-238
Summary Category Group:	S5000
Waste Matrix Code and Description:	S5000, Debris Waste
TWBIR:	LA-T004, LA-T005
TRUCON Codes:	LA116A, LA116B, LA116C, LA116D, LA116E, LA116H, LA117D, LA117E, LA118C, LA119B
Maximum Layers of Packaging:	5
Site:	LANL
Waste-Generating Facility:	TA-55, Plutonium Facility (building PF-4), all wings
Time Period of Generation:	1993—1998
Defense Waste Status:	Defense-related TRU waste. There is no historical record or evidence of spent nuclear fuel or high-level waste ever having been handled at the facility.
Waste Stream Volume (as stored):	166 containers (35 m^3)
Waste Stream Volume (after repackaging):	Not yet determined

Facility Mission

TA-55 has extensive capabilities for the extraction and recovery of plutonium from residues and scraps generated from operations at various LANL facilities and other DOE sites in the defense complex. The recovered plutonium is converted into pure plutonium feedstock. These manufacturing and recovery operations, associated maintenance operations, and TA-55 plutonium research are the sources of TRU-contaminated scrap, residues, and debris generated at TA-55. The scrap and residues are processed to recover as much plutonium as practicable before disposal. Wastes are generated from plutonium recovery and purification for defense and non-defense programs; these wastes are generated and produced in the same rooms and gloveboxes and were not segregated based on funding source until August 27, 1998.

Waste-generating process:

The overall goal of the Pu-238 processes is to produce heat sources for various applications. Limited recovery of plutonium from metal, metal alloys, scrap, and residues is also part of the Pu-238 processing.

Process Feed

Plutonium metal or metal alloys; plutonium oxides and hydroxide cakes; plutonium scrap; pyrochemical salts; crucible pieces; ash; and analytical laboratory solutions.

Waste Material Parameter List (including packaging)

Waste materials:	Cellulosics, plastics, rubber, inorganic matrices, iron-based metals and alloys, other inorganic materials
Packaging materials:	Steel, plastics

Waste Stream Description

Combustible/noncombustible debris including paper, rags, plastic, rubber, and plastic-based and cellulose-based waste generated during Pu-238 activities. Plastic-based waste includes, but may not be limited to: tape, polyethylene and vinyl; gloves; plastic vials, polystyrene; Tygon tubing; polyvinyl chloride plastic; Teflon products; plexiglass; and dry box gloves (unleaded neoprene base). Cellulose-based waste includes, but may not be limited to: rags, wood, paper, and cardboard; laboratory coats and overalls; booties and cotton gloves, and similar materials. The waste may also contain HEPA filters, noncombustible glass and metallic debris. Some of this waste was packaged in small metal cans before being placed in 55-gallon drums.

RCRA Characterization:

No HWNs apply to containers in waste stream TA-55-43.

Radionuclide Content

These waste streams contain plutonium material type (MT)-83, with an initial isotopic composition of plutonium with about 83 percent Pu-238. Americium-241, neptunium-237, and uranium-234 may be present at detectable concentrations as decay products of their plutonium precursors. Thorium-232 and neptunium-237 are present in the feed material. Other secondary radionuclides which may occasionally be present in very low concentrations as contaminants from other TA-55 activities in the area are americium-243, cesium-137, uranium-238, and thorium-230.

Primary References for Documentation of Acceptable Knowledge

Los Alamos National Laboratory Transuranic Waste Characterization AK Information Summary (TWCP-PLAN-0.2.7-001,R.5)

Process Acceptable Knowledge Summary Report for Pu-238 Operations at TA-55 (TWCP-AK-2.1-009)

ACCEPTABLE KNOWLEDGE SUMMARY FOR TA-55-44

Waste Stream Number and Title:	TA-55-44, Mixed Combustible/Noncombustible Debris Waste Containing Plutonium-238
Summary Category Group:	S5000
Waste Matrix Code and Description:	S5000, Debris Waste
TWBIR:	LA-W001
TRUCON Codes:	LA115B, LA116B, LA116C, LA116D, LA116E, LA116F, LA116H, LA118A, LA118C, LA119A, LA119B, LA119D, LA123B, LA123C, LA123F
Maximum Layers of Packaging:	5
Site:	LANL
Waste-Generating Facility:	TA-55, Plutonium Facility (building PF-4), all wings
Time Period of Generation:	1978—1998
Defense Waste Status:	Defense-related TRU waste. There is no historical record or evidence of spent nuclear fuel or high-level waste ever having been handled at the facility.
Waste Stream Volume (as stored):	952 containers (188 m^3)
Waste Stream Volume (after repackaging):	Not yet determined

Facility Mission

TA-55 has extensive capabilities for the extraction and recovery of plutonium from residues and scraps generated from operations at various LANL facilities and other DOE sites in the defense complex. The recovered plutonium is converted into pure plutonium feedstock. These manufacturing and recovery operations, associated maintenance operations, and TA-55 plutonium research are the sources of TRU-contaminated scrap, residues, and debris generated at TA-55. The scrap and residues are processed to recover as much plutonium as practicable before disposal. Wastes are generated from plutonium recovery and purification for defense and non-defense programs; these wastes are generated and produced in the same rooms and gloveboxes and were not segregated based on funding source until August 27, 1998.

Waste-generating Process

The overall goal of the Pu-238 processes is to produce heat sources for various applications. Limited recovery of plutonium from metal, metal alloys, scrap, and residues is also part of the Pu-238 processing.

Process Feed

Plutonium metal or metal alloys; plutonium oxides and hydroxide cakes; plutonium scrap; pyrochemical salts; crucible pieces; ash; and analytical laboratory solutions.

Waste Material Parameter List (including packaging)

Waste materials:	Cellulosics, plastics, rubber, inorganic matrices, iron-based metals and alloys, other inorganic materials
Packaging materials:	Steel, plastics

Waste Stream Description

Combustible/noncombustible debris including paper, rags, plastic, rubber, and plastic-based and cellulose-based waste generated during Pu-238 activities. Plastic-based waste includes, but may not be limited to: tape, polyethylene and vinyl; gloves; plastic vials, polystyrene; Tygon tubing; polyvinyl chloride plastic; Teflon products; plexiglass; and dry box gloves (unleaded neoprene base). Cellulose-based waste includes, but may not be limited to: rags, wood, paper, and cardboard; laboratory coats and overalls; booties and cotton gloves, and similar materials. The waste may also contain noncombustible glass and metallic debris. Some of this waste was packaged in small metal cans before being placed in 55-gallon drums. This waste stream may contain lead items, or items from P/S codes R8, PPD, and TDC (which may be mixed waste items).

RCRA Characterization:

EPA Hazardous Waste Numbers (HWN): D005, D006, D007, D008, D011

Radionuclide Content

These waste streams contain plutonium material type (MT)-83, with an initial isotopic composition of plutonium with about 83 percent Pu-238. Americium-241, neptunium-237, and uranium-234 may be present at detectable concentrations as decay products of their plutonium precursors. Thorium-232 and neptunium-237 are present in the feed material. Other secondary radionuclides which may occasionally be present in very low concentrations as contaminants from other TA-55 activities in the area are americium-243, cesium-137, uranium-238, and thorium-230.

Primary References for Documentation of Acceptable Knowledge

Los Alamos National Laboratory Transuranic Waste Characterization AK Information Summary (TWCP-PLAN-0.2.7-001,R.5)

Process Acceptable Knowledge Summary Report for Pu-238 Operations at TA-55 (TWCP-AK-2.1-009)

ACCEPTABLE KNOWLEDGE SUMMARY FOR TA-55-45

Waste Stream Number and Title:	TA-55-45, Nonmixed Metallic Waste Containing Plutonium-238
Summary Category Group:	S5000
Waste Matrix Code and Description:	S5100, Inorganic Debris Waste
TWBIR:	LA-T005
TRUCON Codes:	LA117B, LA117C, LA117E, LA117G
Maximum Layers of Packaging:	4
Site:	LANL
Waste-Generating Facility:	TA-55, Plutonium Facility (building PF-4), all wings
Time Period of Generation:	1993—1998
Defense Waste Status:	Defense-related TRU waste. There is no historical record or evidence of spent nuclear fuel or high-level waste ever having been handled at the facility.
Waste Stream Volume (as stored):	86 containers (18 m^3)
Waste Stream Volume (after repackaging):	Not yet determined

Facility Mission

TA-55 has extensive capabilities for the extraction and recovery of plutonium from residues and scraps generated from operations at various LANL facilities and other DOE sites in the defense complex. The recovered plutonium is converted into pure plutonium feedstock. These manufacturing and recovery operations, associated maintenance operations, and TA-55 plutonium research are the sources of TRU-contaminated scrap, residues, and debris generated at TA-55. The scrap and residues are processed to recover as much plutonium as practicable before disposal. Wastes are generated from plutonium recovery and purification for defense and non-defense programs; these wastes are generated and produced in the same rooms and gloveboxes and were not segregated based on funding source until August 27, 1998.

Waste-generating Process

The overall goal of the Pu-238 processes is to produce heat sources for various applications. Limited recovery of plutonium from metal, metal alloys, scrap, and residues is also part of the Pu-238 processing.

Process Feed

Plutonium metal or metal alloys; plutonium oxides and hydroxide cakes; plutonium scrap; pyrochemical salts; crucible pieces; ash; and analytical laboratory solutions.

Waste Material Parameter List (including packaging)

Waste materials:	Metal scrap items, cellulosics, rubber, plastics
Packaging materials:	Steel, plastics

Waste Stream Description

Metal waste generated from facility and equipment operations and maintenance. This includes metal scrap, small tools, small equipment items, motors, pumps, and process equipment. Only a small fraction of plastic (used as packaging and not in direct contact with the waste material) is present in this waste stream. Most of this waste was packaged in small metal cans before being placed in 55-gallon drums.

RCRA Characterization:

No HWNs apply to containers in waste stream TA-55-45.

Radionuclide Content

These waste streams contain plutonium material type (MT)-83, with an initial isotopic composition of plutonium with about 83 percent Pu-238. Americium-241, neptunium-237, and uranium-234 may be present at detectable concentrations as decay products of their plutonium precursors. Thorium-232 and neptunium-237 are present in the feed material. Other secondary radionuclides which may occasionally be present in very low concentrations as contaminants from other TA-55 activities in the area are americium-243, cesium-137, uranium-238, and thorium-230.

Primary References for Documentation of Acceptable Knowledge

Los Alamos National Laboratory Transuranic Waste Characterization AK Information Summary (TWCP-PLAN-0.2.7-001,R.5)

Process Acceptable Knowledge Summary Report for Pu-238 Operations at TA-55 (TWCP-AK-2.1-009)

ACCEPTABLE KNOWLEDGE SUMMARY FOR TA-55-46

Waste Stream Number and Title:	TA-55-46, Mixed Metallic Waste Containing Plutonium-238 and Lead Items
Summary Category Group:	S5000
Waste Matrix Code and Description:	S5100, Inorganic Debris Waste
TWBIR:	LA-W005
TRUCON Codes:	LA117C, LA117E
Maximum Layers of Packaging:	4
Site:	LANL
Waste-Generating Facility:	TA-55, Plutonium Facility (building PF-4), all wings
Time Period of Generation:	1978—1998
Defense Waste Status:	Defense-related TRU waste. There is no historical record or evidence of spent nuclear fuel or high-level waste ever having been handled at the facility.
Waste Stream Volume (as stored):	167 containers (32 m^3)
Waste Stream Volume (after repackaging):	Not yet determined

Facility Mission

TA-55 has extensive capabilities for the extraction and recovery of plutonium from residues and scraps generated from operations at various LANL facilities and other DOE sites in the defense complex. The recovered plutonium is converted into pure plutonium feedstock. These manufacturing and recovery operations, associated maintenance operations, and TA-55 plutonium research are the sources of TRU-contaminated scrap, residues, and debris generated at TA-55. The scrap and residues are processed to recover as much plutonium as practicable before disposal. Wastes are generated from plutonium recovery and purification for defense and non-defense programs; these wastes are generated and produced in the same rooms and gloveboxes and were not segregated based on funding source until August 27, 1998.

Waste-generating Process

The overall goal of the Pu-238 processes is to produce heat sources for various applications. Limited recovery of plutonium from metal, metal alloys, scrap, and residues is also part of the Pu-238 processing.

Process Feed

Plutonium metal or metal alloys; plutonium oxides and hydroxide cakes; plutonium scrap; pyrochemical salts; crucible pieces; ash; and analytical laboratory solutions.

Waste Material Parameter List (including packaging)

Waste materials: Metal scrap items, cellulosics, rubber, plastics
Packaging materials: Steel, plastics

Waste Stream Description

Metal waste generated from facility and equipment operations and maintenance. This includes metal scrap, small tools, small equipment items, motors, pumps, and process equipment. Only a small fraction of plastic (used as packaging and not in direct contact with the waste material) is present in this waste stream. Most of this waste was packaged in small metal cans before being placed in 55-gallon drums. This waste stream may contain lead items.

RCRA Characterization

TA-55-46 is conservatively assigned the following EPA Hazardous Waste Numbers (HWN).

- D005, D006, D007, D008, D011

Radionuclide Content

These waste streams contain plutonium material type (MT)-83, with an initial isotopic composition of plutonium of about 83 percent Pu-238. Americium-241, neptunium-237, and uranium-234 may be present at detectable concentrations as decay products of their plutonium precursors. Thorium-232 and neptunium-237 are present in the feed material. Other secondary radionuclides which may occasionally be present in very low concentrations as contaminants from other TA-55 activities in the area are americium-243, cesium-137, uranium-238, and thorium-230.

Primary References for Documentation of Acceptable Knowledge

Los Alamos National Laboratory Transuranic Waste Characterization AK Information Summary (TWCP-PLAN-0.2.7-001,R.5)

Process Acceptable Knowledge Summary Report for Pu-238 Operations at TA-55 (TWCP-AK-2.1-009)

ACCEPTABLE KNOWLEDGE SUMMARY FOR TA-55-47

Waste Stream Number and Title:	TA-55-47, TRU HEPA Filter Waste Containing Plutonium-238
Summary Category Group:	S5000
Waste Matrix Code and Description:	S5410, Composite Filter Debris Waste
TWBIR:	LA-T005
TRUCON Codes:	LA119B
Maximum Layers of Packaging:	1
Site:	LANL
Waste-Generating Facility:	TA-55, Plutonium Facility (building PF-4), all wings
Time Period of Generation:	1993—1998
Defense Waste Status:	Defense-related TRU waste. There is no historical record or evidence of spent nuclear fuel or high-level waste ever having been handled at the facility.
Waste Stream Volume (as stored):	14 containers (2.9 m^3)
Waste Stream Volume (after repackaging):	Not yet determined

Facility Mission

TA-55 has extensive capabilities for the extraction and recovery of plutonium from residues and scraps generated from operations at various LANL facilities and other DOE sites in the defense complex. The recovered plutonium is converted into pure plutonium feedstock. These manufacturing and recovery operations, associated maintenance operations, and TA-55 plutonium research are the sources of TRU-contaminated scrap, residues, and debris generated at TA-55. The scrap and residues are processed to recover as much plutonium as practicable before disposal. Wastes are generated from plutonium recovery and purification for defense and non-defense programs; these wastes are generated and produced in the same rooms and gloveboxes and were not segregated based on funding source until August 27, 1998.

Waste-generating Process

The overall goal of the Pu-238 processes is to produce heat sources for various applications. Limited recovery of plutonium from metal, metal alloys, scrap, and residues is also part of the Pu-238 processing.

Process Feed

Plutonium metal or metal alloys; plutonium oxides and hydroxide cakes; plutonium scrap; pyrochemical salts; crucible pieces; ash; and analytical laboratory solutions.

Waste Material Parameter List (including packaging)

Waste materials:	Iron-based metals and alloys, cellulose, plastic
Packaging materials:	Steel, plastics

Waste Stream Description

High-efficiency particulate air (HEPA) filters generated from facility and equipment operations and maintenance.

RCRA Characterization:

No HWNs apply to containers in waste stream TA-55-47

Radionuclide Content

These waste streams contain plutonium material type (MT)-83, with an initial isotopic composition of plutonium with about 83 percent Pu-238. Americium-241, neptunium-237, and uranium-234 may be present at detectable concentrations as decay products of their plutonium precursors. Thorium-232 and neptunium-237 are present in the feed material. Other secondary radionuclides which may occasionally be present in very low concentrations as contaminants from other TA-55 activities in the area are americium-243, cesium-137, uranium-238, and thorium-230.

Primary References for Documentation of Acceptable Knowledge

Los Alamos National Laboratory Transuranic Waste Characterization AK Information Summary (TWCP-PLAN-0.2.7-001,R.5)

Process Acceptable Knowledge Summary Report for Pu-238 Operations at TA-55 (TWCP-AK-2.1-009)

WASTE GENERATION SUMMARY DIAGRAM

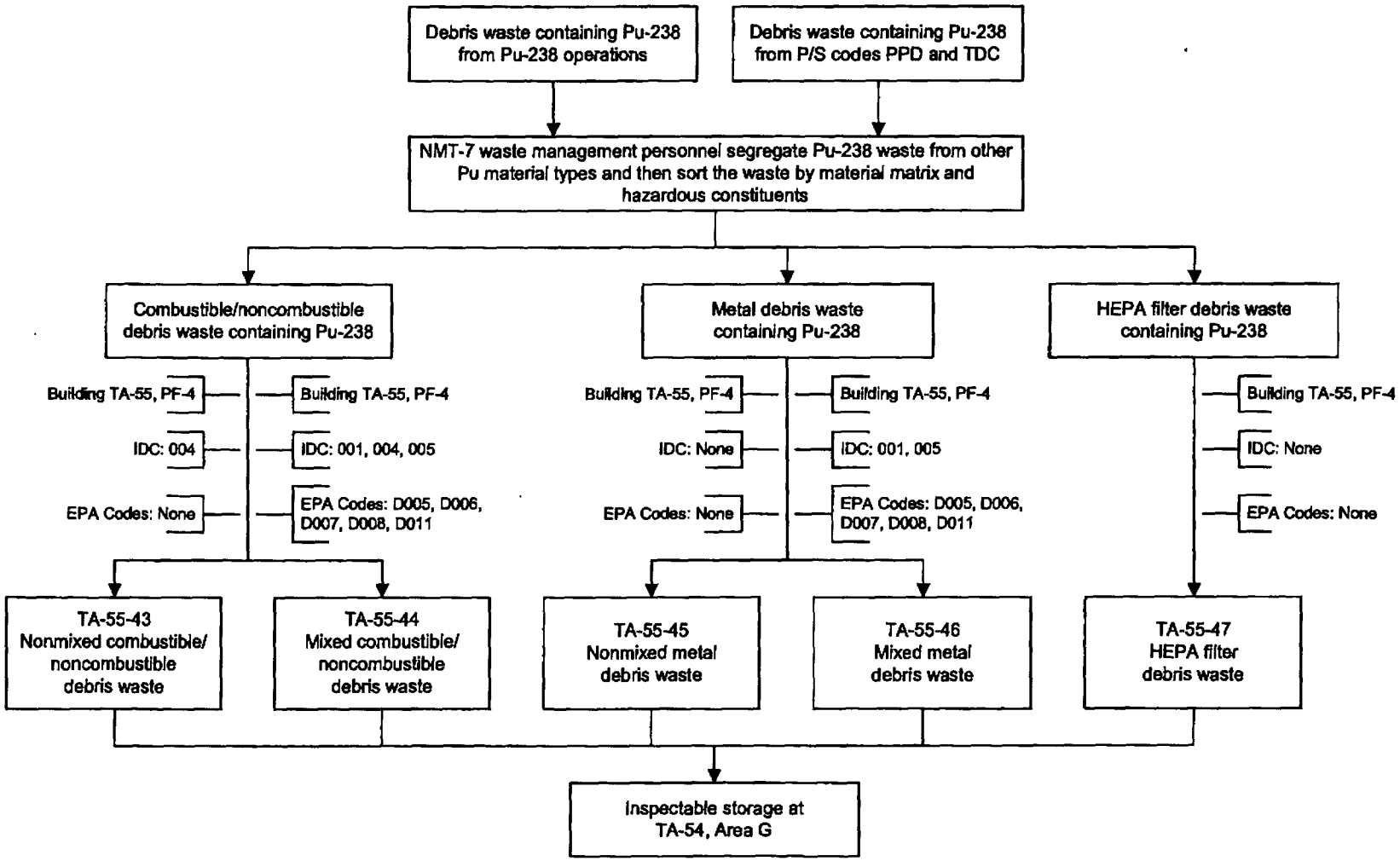

ACCEPTABLE KNOWLEDGE SUMMARY REPORT FOR WASTE STREAMS TA-55-43, TA-55-44, TA-55-45, TA-55-46, and TA-55-47

1.0 INTRODUCTION

All transuranic (TRU) waste must be sufficiently characterized and certified before it is shipped to the Waste Isolation Pilot Plant (WIPP). The U.S. Environmental Protection Agency (EPA) allows use of acceptable knowledge (AK) for waste characterization, and defines AK in its guidance document, *Waste Analysis at Facilities that Generate, Treat, Store and Dispose of Hazardous Waste*. Attachment B, Waste Analysis Plan, to the *Hazardous Waste Facility Permit Issued to Waste Isolation Pilot Plant* (EPA No. NM4890139088) (WIPP WAP) defines AK information and provides guidelines on how AK should be obtained and documented.

This AK summary report was prepared in accordance with *Acceptable Knowledge Documentation* (TWCP-QP-1.1-021). The primary purpose of this report is to systematically organize, evaluate, and summarize AK information about characteristics of the wastes generated by the Plutonium Facility at Technical Area (TA) 55, one of the TRU waste generators at Los Alamos National Laboratory (LANL). By doing so, this report provides technical support for assignment of specific waste containers to the waste streams covered by this report.

2.0 METHODOLOGY USED TO SEARCH FOR AK RECORDS

The AK search for the information related to waste streams TA-55-43, TA-55-44, TA-55-45, TA-55-46, and TA-55-47 (also referred to as the Pu-238 debris waste streams) covered:

- Review of the *Los Alamos National Laboratory Transuranic Waste Characterization AK Information Summary* (TWCP-PLAN-0.2.7-001,R.5) (AK Information Summary) that includes information regarding all LANL TRU waste streams

  NOTE: The primary sources of waste generator information presented in the AK Information Summary are:

  - The "Los Alamos National Laboratory Transuranic Waste Database" maintained by the Facility Waste Operations (FWO)-Integrated Information Management (IIM) group for all TRU waste in storage at TA-54, in accordance with AP-SWO-006
  - The TA-55 Waste Management System (WMS) database described in QA-TP-WMS-000.001 and in Section 7.2 of the *TA-55 Transuranic Waste Interface Document* (TWID)
  - Archived older versions of the TA-55 WMS database (TWCP-6988)

- Review of documents related to the waste generation and waste management activities at TA-55 as documented in the Acceptable Knowledge Roadmap (Attachment 1)
- Interviews with personnel involved with waste generation and waste management at TA-55 as documented in the process AK report listed in the Acceptable Knowledge Roadmap (Attachment 1)
- Review of process AK reports for TA-55 processes (as discussed below)
- Analysis of processes generating waste, as discussed in the process AK reports and in this report

The Transuranic Waste Characterization/Certification Project (TWCP) Records Management/Document Control (RMDC) Center contains copies of the documents that are referenced in this summary report. Unclassified Controlled Nuclear Information (UCNI) are reported in records, rather than included in this report. Such records are identified as UCNI in the Acceptable Knowledge Roadmap (Attachment 1).

This AK waste stream summary report is based on detailed process information compiled in *Process Acceptable Knowledge Summary Report for Plutonium-238 Operations at TA-55* (TWCP-AK-2.1-009). This particular process AK report contains information on 11 individual processes that have each been assigned a unique identifier called a process/status (P/S) code. The search and compilation of AK information was based on P/S code, because that is the greatest level of process detail recorded in waste generator records. However, as described in section 3.2, TA-55 TRU waste items have always been segregated and packaged into waste containers based on the physical form and material type content of the waste, without regard to process of origin (i.e., P/S code). In order to mitigate confusion resulting from these two different ways of categorizing TA-55 waste (by process of generation and P/S code or by material content and waste stream number), separate AK reports have been prepared for each categorization method (i.e., process AK reports for process areas, and AK summary reports for waste streams). The AK information search was performed based on the processes used at TA-55 and tracked by the P/S codes, and it is summarized in the process AK report.

3.0 DESCRIPTION OF THE WASTE STREAM

3.1 Facility and Mission

The TA-55 Plutonium Facility processed Pu-238 into heat sources from Pu-238 feedstock supplied by Savannah River Site (SRS). Waste streams TA-55-43, TA-55-44, TA-55-45, TA-55-46 and TA-55-47 were generated at the TA-55 Plutonium Facility as a result of these heat source fabrication activities. The Pu-238 fabrication activities were strictly segregated from all other Pu-processing activities at TA-55 because cross-contamination of materials would adversely affect the quality and usability of the end products (TWCP-1037). The heat source

fabrication activities included both defense missions (the Milliwatt Generator Program, TWCP-1045) and nondefense applications such as the space program. However, waste also was produced from "special process" and research-related activities. These wastes were not segregated until 1998, but rather were commingled in the final waste containers to such an extent that segregation is not possible on the basis of waste generating process or glovebox location (TWCP-887). For this reason the waste streams are defense related. The waste was also co-mingled with room trash related to these same operations (both defense and non-defense), which was initially boxed as low-level waste but was returned for discard in drums as TRU waste when on-site radioassay results showed it exceeded the low-level waste threshold value (TWCP-816). In addition, all the fuels possess approximately the same weight percent Pu-238, so there is no distinguishing isotopic signature among the fuels of the various projects.

TA-55-43, TA-55-44, TA-55-45, TA-55-46 and TA-55-47 waste streams were generated in the TA-55 Plutonium Facility (Building PF-4). A LANL site map and a detailed map of the buildings at TA-55, including Building PF-4, are shown in Attachment 2.

3.2 Basis, Rationale, and Assumptions Used to Delineate the Waste Streams

The basis for delineation of TA-55 waste streams was established by the evolving set of LANL and TA-55 waste management plans and site-specific procedures, which date back to the start of operations at the Plutonium Facility in 1978 (TWCP-352, TWCP-697, TWCP-700, TWCP-701, TWCP-3943). The stated guidance and practice from the beginning, continuing to the present day, has been to handle and package all combustible and noncombustible debris waste in a similar fashion, regardless of the process of origin. Relevant details of these planning and implementation documents are summarized in this section, to provide background information to support the process used by TWCP to assign TA-55 waste containers to specific waste streams. Waste stream assignment is made on the basis of waste generator information compiled in the TWCP waste container data base, which comprises the bulk of the AK Information Summary. Waste generator information is reviewed to identify the types and sources of waste items present in each drum, which are key factors in the evaluation of the most appropriate waste summary group, waste matrix code, and potential for the presence of hazardous constituents in that drum.

3.2.1 Waste Packaging at TA-55

Inspection, collection, documentation and packaging operations of solid, certifiable TRU wastes at TA-55 are conducted in PF-4 by a waste management section or team (TWCP-352, TWCP-700, TWCP-701, TWCP-3943). Wastes from all TRU waste-generating activities at TA-55 are handled and packaged by this team. Materials are considered waste only when they have been received and processed by the waste

management team. Waste segregation schemes used by this team have evolved since operations began at the Plutonium Facility in 1978.

In 1978, the standard operating procedure for waste management at TA-55 stated the guiding philosophy of minimizing the amount of waste generated and minimizing the plutonium content of that waste (TWCP-3943). Discard limits for plutonium in various types of waste matrices were established by the waste-generating group, and approved by the LANL division office and the DOE Albuquerque Operations Office. Personnel were requested to sort potentially recyclable TRU waste items (i.e., those containing potentially recoverable amounts of plutonium) into classes such as rubber, plastics, rags, non-Pu metals, glass, oils, cans, sweepings, etc. These materials were then assayed. Based upon its plutonium level relative to the DL, material was either sent to recovery operations or to "20-year" retrievable storage. All liquids, including oils, were required to be sent to recovery operations for processing. Liquids were explicitly prohibited from any container of solid waste materials.

In 1984, a lab-wide TRU Waste Certification Plan was adopted for newly generated TRU waste (TWCP-697). Each LANL waste generator was required to develop an attachment to this plan to define the details of the waste certification functions and controls that applied to their specific processes and waste streams. TA-55 prepared an attachment in March 1987 for contact-handled combustible and noncombustible solid waste (TWCP-701), defined as follows:

- Combustible waste forms included materials that could be reduced to an ash if desired but that did not require further processing to meet the WIPP WAC (TWCP-701). (This definition is still current.) Subcategories included plastic-base, cellulose-base and miscellaneous (graphite and graphite crucibles). It was acceptable for the combustible waste stream to include some unspecified "small" fraction of noncombustible solids such as scrap metals.

- Noncombustible waste forms included materials that could not be reduced to ash but that did meet the WIPP WAC without further processing (TWCP-701). The two subcategories were metals and non-metals. The non-metal wastes included glass, fiberglass heating mantles, porcelain crucibles, ceramic furnace tube inserts, and leaded glovebox gloves. It was acceptable for the noncombustible waste stream to include some unspecified "small" fraction of combustible solids, and that could be contained in plastics. For WIPP purposes, any waste forms that were chemically compatible and that met the WAC, could be combined into a single waste container.

In 1995, a new TRU Waste Certification Plan was adopted, including a new attachment that formalizes how the TA-55 waste management team currently segregates newly generated wastes into waste streams (TWCP-700). Waste materials are segregated:

- by radioisotope, to meet nondestructive assay (NDA) and gas generation requirements
- by material matrix, to meet NDA and TRUCON requirements
- by hazardous constituents, to meet RCRA and Department of Transportation (DOT) requirements

Combustible waste forms include plastic base and cellulose base (TRUCON code 116), but graphite waste was moved to the noncombustible category. Noncombustible debris waste forms are broken down to a finer level of classification than had previously been used:

- metals (TRUCON code 117)
- glass (TRUCON code 118)
- HEPA filters (TRUCON code 119)
- leaded gloves (TRUCON code 123)
- salts (TRUCON code 124)
- graphite (TRUCON code 115)

In addition, each major waste form includes provisions for small quantities of unspecified waste with similar properties. This provision is necessary to allow for infrequently encountered waste items.

3.2.2 Waste Stream Delineation for TA-55

From the beginning of operations at TA-55, the physical description of each waste item generated was documented on a Waste Origination and Disposition Form (WODF) by the waste generator according to controlled procedures. The P/S code for waste items was sometimes also documented on this form. Starting in 1987, the TA-55 Plutonium Facility began its current system of tracking waste items both by the process from which they originated as well as by their material content. Waste items are labeled with an item identification (ID) code that contains information on the waste material parameter of the item and an embedded P/S code that corresponds to the process that produced the waste item (although recording of P/S codes was inconsistent until about 1990). In the packaging process, a standard form, the Discardable Waste Log Sheet (DWLS), was used to list each ID code and record its matrix material. This form was signed by the waste packager and approved by

quality assurance personnel. Both the WODF and DWLS for each TRU waste drum have been maintained as hard copy records by the generator. For waste stream TA-55-19, example copies of these container records (for combustible debris) are included in Attachment 4. Note that this waste container (LA00000055683) contains waste items generated by three different P/S codes (CXL, ED, and SC), each with its own completed WODF.

Waste items are packaged into waste containers based on the material content of the waste, without regard to P/S code. This practice complicates AK tracking because a single waste container can include waste items from several P/S codes. In the AK Information Summary, TA-55 wastes have been assigned to waste streams based on the waste segregation schemes used by TA-55:

- By radioisotope content (Pu-238 or Pu-239 material type)
- By material matrix (combustible, noncombustible, metal, glass, etc. waste types)
- By hazardous waste status (mixed, non-mixed, or special case waste streams)

Waste stream delineation was performed using waste generator information (such as the WODF and DWLS) that has been compiled in an electronic database that is part of the AK Information Summary. Because waste items from several different P/S codes were combined into each waste drum, a special sort on the P/S code of each waste item in a drum was necessary to determine if the drum contained all non-mixed items, some or all mixed-waste items, or a special case item. If the P/S code information was missing for any item in a waste drum (as was the case for many older wastes), that drum was conservatively assigned to the mixed-waste stream.

3.2.3 Waste Container Labeling

The net effect of the waste packaging system used at TA-55 is that several HWNs are conservatively assigned to individual waste streams for the purposes of WIPP disposal, because the WIPP WAP requires HWN assignment on a waste stream rather than a waste container basis. For the purposes of generator and on-site storage, however, LANL labels waste on a container by container basis. Thus, the hazardous labels on containers in storage at LANL should not be expected to correspond to the HWNs assigned to the waste stream through this AK summary report. Hazardous labels are updated to meet WIPP disposal requirements just before loading waste containers into the Transuranic Package Transporter-Model II (TRUPACT-II) for shipping to the WIPP.

3.3 Waste Physical Form and Content Description

The TA-55-43 and TA-55-44 waste streams are defined as combustible/ noncombustible debris waste (AK Information Summary, Appendix D), with TA-55-44 being a mixed waste stream and TA-55-43 its non-mixed counterpart. The waste includes paper, rags, plastic, rubber, and plastic-based and cellulose-based waste generated during Pu-238 activities. Plastic-based waste includes, but may not be limited to: tape, polyethylene and vinyl; gloves; plastic vials, polystyrene; tygon tubing; polyvinyl chloride plastic; Teflon products; plexiglass; and dry box gloves (unleaded neoprene base). Cellulose-based waste includes, but may not be limited to: rags, wood, paper, and cardboard; laboratory coats and overalls; booties and cotton gloves, and similar materials. The waste may also contain HEPA filters and noncombustible glass and metallic debris. Some of this waste was packaged in small metal cans before being placed in 55-gallon drums.

The TA-55-45 and TA-55-46 waste streams are defined as metallic waste (AK Information Summary, Appendix D), with TA-55-46 being a mixed waste stream and TA-55-45 its non-mixed counterpart. The waste includes small tools, cans, small equipment, motors, pumps, process equipment, gloveboxes, ventilation ductwork, and pipes. The waste may also contain a small fraction of combustible solids (paper, rubber, plastics) (AK Information Summary, Appendix D).

The TA-55-47 waste stream consists of HEPA filters (AK Information Summary, Appendix D).

3.4 Waste Volume and Time Period of Waste Generation

The information in Table 1 is from the AK Information Summary (TWCP-PLAN-0.2.7-001, R.5, Table 3-1). These values will change as the AK Information Summary is continually updated and as new waste information is obtained.

Table 1. Pu-238 Debris Waste Stream Volumes and Years Generated

Waste Stream	Waste Stream Volume	Years Generated
TA-55-43	166 containers (35 m^3)	1993 to 1998
TA-55-44	952 containers (188 m^3)	1978 to 1998
TA-55-45	86 containers (18 m^3)	1993 to 1998
TA-55-46	167 containers (32 m^3)	1978 to 1998
TA-55-47	14 containers (2.9 m^3)	1993 to 1998

Source: AK Information Summary, R.5, Table 3-1

3.5 Waste Generation Process

3.5.1 Overview

The Pu-238 debris waste streams were generated from Pu-238 operations used in TA-55 processes to fabricate heat sources.

The manufacturing and research operations performed at TA-55 in the recovery of plutonium results in the production of plutonium-contaminated scrap and residues. These residues are processed to recover as much plutonium as is practical (TWCP-352). TA-55 has extensive capabilities for the extraction and recovery of plutonium from residues and scrap generated from operations at various LANL facilities and other DOE sites and from commercial radioactive sources. These recovery operations, along with associated maintenance operations, and TA-55 plutonium research are the sources of TRU waste generated at TA-55.

Plutonium processing facilities generate contaminated debris waste that includes:

- paper, rags, plastic, rubber, and plastic-based and cellulose-based waste. Plastic-based waste includes, but may not be limited to: tape, polyethylene and vinyl; gloves; plastic vials, polystyrene; tygon tubing; polyvinyl chloride plastic; Teflon products; plexiglass; and dry box gloves (unleaded neoprene base). Cellulose-based waste includes, but may not be limited to: rags, wood, paper, and cardboard; laboratory coats and overalls; booties and cotton gloves, and similar materials.

- small tools, cans, small equipment, motors, pumps, process equipment, gloveboxes, ventilation ductwork, and pipes.

- HEPA filters.

3.5.2 Process Flow Diagrams

Detailed information about the TA-55 Pu-238 processes is compiled in *Process Acceptable Knowledge Summary Report for Plutonium-238 Operations at TA-55* (TWCP-AK-2.1-009). A generalized flow diagram for Pu-238 processes relevant to this AK search is presented as Attachment 3. The full block flow diagram for plutonium processing and waste management at TA-55 is given in reference TWCP-886.

The following subsections describe the processes that generated waste assigned to the TA-55-43, TA-55-44, TA-55-45, TA-55-46, and TA-55-47 waste streams. The potential for RCRA-regulated constituents to be

present due to feed materials or chemical use in these processes is summarized in Section 3.6. The applicability of EPA HWNs as a result of this potential is specified in Section 8.

Pu-238 processing operations involve several separate and different processes. The processes and P/S codes applicable to these operations are listed below.

- Aqueous Scrap Processing (P/S code ASP)
- General Purpose Heat Source Fabrication (P/S code GPHS)
- Metallography (P/S code MTL)
- Routine Pu-238 Heat Source Production (P/S code P1)
- Routine Pu-238 Waste Solidification (P/S code R8)
- Recovery of Pu-238 from Sucrose Solutions (P/S code R8)
- Recovery of Pu-238 from Contaminated Iridium (P/S code RCI)
- Routine Pu-238 Scrap Processing (P/S code SCP)
- Pu-238 Direct Oxide Reduction (P/S code WS)

3.5.3 Aqueous Scrap Processing (P/S code ASP)

P/S code ASP is a new activity that covers work involved in the purification of solid Pu-238 oxide ($^{238}PuO_2$) in a nitric acid stream, similar to the recovery activities already established for Pu-239 as part of TA-55 nitrate operations (e.g., P/S codes ED, MPD, SC and SP described in TWCP-AK-2.1-005). A flow chart showing the Pu-238 Aqueous Scrap Recovery Process (P/S code ASP) is included as Attachment 5 in the process AK report for Pu-238 operations.

During comminution, the Pu-238 solid is ground to a particle size < 5 μm, after which all or a portion of the ground material is put into a dissolution vessel. The Pu-238 solid is dissolved in a mixture of refluxing concentrated nitric acid and hydrofluoric acid. The Pu-238-rich solution is filtered through a 5-μm Teflon membrane, which is then stored in a stainless steel can. A portion of the filtrate may be processed through ion exchange, or the entire filtrate may be treated for oxalate precipitation.

Oxalate precipitation involves pH adjustment of the filtrate with nitric acid. Urea is added to scavenge nitrite that could interfere with further chemical pretreatment. Hydroxylamine nitrate is added to adjust the valence of the plutonium to (III). Oxalic acid is added to form a Pu-oxalate precipitate. The precipitate is filtered, and calcination converts the Pu-238 oxalate to $^{238}PuO_2$ product. The solid product is cooled, weighed, and stored.

The Pu-238 filtrate destined for ion exchange may undergo an aluminum nitrate treatment in which the filtrate is added to aluminum nitrate dissolved in dilute nitric acid, followed by filtration to collect any formed solids. (Typically, the aluminum nitrate treatment is not performed.) The filtrate then undergoes pretreatment involving urea, sodium nitrite, and ferrous salt prior to ion exchange. The Pu-rich eluate is collected and undergoes oxalate precipitation as described above. The Pu-lean effluent, which contains impurity metal ions as well as aluminum from the aluminum nitrate treatment, is adjusted to a basic pH with sodium hydroxide. The majority of the impurity ions—along with any residual Pu-23—precipitate as metal hydroxides.

The hydroxide precipitate is calcined and then stored, and the hydroxide filtrate is sampled to determine the radioactivity level. The hydroxide filtrates are transferred to P/S code R8, which is the residue solidification process. In this process, any soluble Pu-238 is recovered with ferric nitrate and sodium hydroxide, and the filtrate resulting from the solidification process is sent to the Radioactive Liquid Waste Treatment Facility (RLWTF) at TA-50 through the caustic waste line. Pu-238 in the hydroxide filtrates can also be recovered by an ultrafiltration/polymer filtration (UF/PF) process.

The $^{238}PuO_2$ product is sent to P/S code P1. The hydroxide cakes are stored either in the vault or in the glovebox line.

3.5.4 Heat Source Fabrication (P/S codes GPHS and P1)

The routine Pu-238 heat source production process involves fuel fabrication, pellet production, and scrap/process residues processing. Each of these processes constitutes a separate operation, using different materials and generating different types of waste; therefore, they are addressed individually below. Debris waste containing lead (e.g., gloves) may be generated by any of the heat source production processes. This waste is segregated from non-lead debris waste and disposed of as RCRA-regulated TRU waste.

The first step in each of the processes is ^{16}O isotopic exchange that occurs at 775 °C. In GPHS and LWRHU processing, oxygen isotopic exchange is followed by heating to 1000 °C to release the alpha-decay product helium from the PuO_2 crystal structure. The MWG processing scheme later seasons the granules at 1600 °C while GPHS and LWRHU season a portion at 1600 °C and a second portion at 1100 °C. The latter two processes ultimately hot press the pellets at 1530 °C and later heat treat the pellets at 1000 °C and finally at 1527 °C. By contrast, the MWG process mixes the PuO_2 with powdered yttrium metal and heats it at 1350 °C to form a sub-stoichiometric plutonium oxide. These

temperatures are so high as to ensure that any organic material that might have been present in the initial feedstock would not survive in the fuel.

Fuel Fabrication

The feed material for the fuel fabrication is $^{238}PuO_2$ from SRS. The SRS has been directly or indirectly the source of all feed material for fuel fabrication. This material goes through the physical processes of weighing, splitting, ball milling, slugging and screening, and granule seasoning. No solvents or metals are introduced to the process; therefore, the waste generated will not be regulated by the EPA under RCRA. All waste generated from the fuel fabrication process is nonmixed waste.

Pellet Production

The feed material for the pellet production process consists of $^{238}PuO_2$ from fuel fabrication. This material undergoes the physical processes of screening and weighing, die loading, hot pressing, sintering, and dimensioning. The product is sent to the vault and any residues are sent to the scrap/process residues processing. No solvents or metals are introduced to this process; therefore, any waste generated is not RCRA-regulated and is considered nonmixed TRU debris waste.

Scrap and Process Residues Processing

The scrap and process residues processing operation receives materials from the vault and various other processes, such as fuel fabrication, pellet production, calorimetry, and metallography. This is a physical process consisting of weighing, sorting, segregating, and loading into a shipping container. The product from this process either goes to the vault or feeds into the calorimetry operation. No solvents or metals are introduced into this process. Therefore, the waste generated is nonmixed TRU debris contaminated with Pu-238.

3.5.5 Metallography (P/S code MTL)

The metallography process receives its feed material ($^{238}PuO_2$) from P/S code P1 processes. The metallography process is a physical process involving cutting, mounting, grinding, polishing, and photography. The process may also include etching.

The feed material consists of $^{238}PuO_2$ fuel samples recovered from encapsulated heat sources, impacted heat sources, fuel pellets, or other sources. This process is predominately a physical process, generating

only Pu-238-contaminated debris waste. However, chemicals are used to mount and etch the $^{238}PuO_2$.

The waste generated from the metallography process includes aluminum tape, grinding papers and polishing cloths, aqueous abrasive slurries, acid etching solution, and aqueous washing/cleaning solutions. All of these wastes are nonmixed, Pu-238-contaminated wastes. The grinding papers and polishing cloths are dried and disposed of as debris waste, as is the aluminum tape. The aqueous abrasive slurries, which are not RCRA-regulated, are feed material for the Pu-238 waste solidification process (P/S code R8). Any etching solution remaining on the $^{238}PuO_2$ sample is rinsed off using distilled water and is collected with the aqueous wash solutions. These solutions, which are not RCRA-regulated, are also sent to the waste solidification process (P/S code R8). Any excess etching solution, which is a corrosive liquid, would not be contaminated with Pu-238 and, therefore, would not be TRU waste.

The metallography process may generate debris waste containing lead (e.g., gloves). This waste is segregated from non-lead debris waste and disposed of as RCRA-regulated TRU waste.

3.5.6 Scrap Processing (P/S code SCP)

The scrap processing operation received its feed material ($^{238}PuO_2$) from calorimetry operations (P/S code C1), heat source operations (P/S codes P1 and GPHS), and the vault. The feed material did not contain any hazardous constituents. It was a physical process that involved opening, weighing, sorting, and segregating the $^{238}PuO_2$ that arrived in an EP-60 shipping container. The $^{238}PuO_2$ was then loaded into a shipping container and sent to the calorimetry process then to the vault.

No solvents or metals were introduced into the process; therefore, the only waste generated is solid debris waste. Any debris waste containing lead (e.g., gloves) was segregated from non-lead debris waste and disposed of as RCRA-regulated TRU waste. The types of materials in the debris waste include cheesecloth pads and metal tools and equipment.

3.5.7 Recovery of $^{238}PuO_2$ from Contaminated Iridium (P/S code RCI)

The process was the recovery of $^{238}PuO_2$ from contaminated iridium (Ir). The feed material for this process came from metal items in the Ir inventory in TA-55, Building PF-4, or TA-3, CMR Building. This process used both molten magnesium chloride and electrochemical dissolution to remove the Pu-238 from the Ir.

The waste generated from the recovery process includes solid, non-hazardous, TRU debris waste, such as magnesium chloride salt, magnesium oxide crucibles, tantalum and stainless steel cans, and routine laboratory trash. Any debris waste containing lead (e.g., gloves) was segregated from non-lead debris waste and disposed of as RCRA-regulated TRU waste. The spent electrolyte solution, which was acidic and contaminated with small amounts of Ir and Pu-238, and the water wash were sent to the Pu-238 solidification process (P/S code R8).

3.5.8 Routine ^{238}Pu Waste Solidification (P/S code R8)

The process of solidifying Pu-238 in waste solutions began in 1978 and is still active. Feed material for this process comes from analytical operations (CHM-1, CLS-1), Pu-238 heat source fabrication operations, metallography operations, and Pu-238 decontamination operations. The feed solutions are strongly acidic, contain heavy metals, and have Pu-238 concentrations that are many orders of magnitude above the discard limit for radioactive waste solutions. The solidification process uses sodium hydroxide, ferric nitrate, and phenolphthalein (1%) in ethanol to precipitate Pu-238.

The analytical techniques for Pu-238 solutions do not require organic solvents and heavy metals to be introduced into the solutions. In addition, the Pu-238 solutions returning from analytical chemistry are analyzed for heavy metals (totals) in a random fashion along with routine analyses for pH (or acid concentration) and radioactivity. Thus, from 1992 – 1997, 68 analyses were performed on 49 solutions returning from CLS-1, as follows: four for arsenic (As), three for barium (Ba), four for cadmium (Cd), 24 for chromium (Cr), three for lead (Pb), six for mercury (Hg), five for selenium (Se), and 19 for silver (Ag). None of the analytical results for total metals exceeded the RCRA regulatory level for the toxicity characteristic for the metals (based on the 20:1 factor). Two of the results for Hg were inconclusive due to insufficient sensitivity in the analysis.

The hydroxide ferroflocculation process might concentrate the heavy metals from the analytical solutions sufficiently to put them above the regulatory level for toxicity in the hydroxide cakes. Based on the concentration of metals in the feed waste stream (CLS-1 solutions) and the chemistry involved in the solidification process, the arsenic, barium, chromium, and selenium remain in the filtrate. The cadmium (Cd), lead (Pb), mercury (Hg), and silver (Ag) co-precipitate with the hydroxide cakes. Since May 1991, the filtrate from this process has been analyzed for metals and all results have been below the RCRA regulatory limits. Without analytical data on the hydroxide cakes, the RCRA codes for Cd

(D006), Pb (D008), Hg (D009), and Ag (D011) must be applied to the hydroxide cakes (but not to the debris waste).

The solid debris waste generated from this process is disposed as TRU solid, non-mixed waste. It is not assigned any EPA hazardous waste numbers. Any laboratory debris waste containing lead (e.g., gloves) is segregated from non-lead debris waste and is disposed of as RCRA-regulated TRU waste.

3.5.9 Recovery of Pu-238 from Sucrose Solutions (P/S code R8)

The recovery of Pu-238 from sucrose solutions comprised feed material that consisted of a 35% sucrose solution composed of sodium pyrophosphate, water, and sucrose. Sucrose solutions were used as a dispersive medium in particle size analysis of $^{238}PuO_2$; therefore, the feed solutions contained $^{238}PuO_2$.

This was a physical process. No solvents were introduced during the process or as feed material. The wastes generated from this process consist of a calcined residue of sucrose and solid debris waste. The debris waste may contain stainless steel, ceramic, glassware, tygon tubing, and filter paper. All of the waste generated is solid TRU waste. Any laboratory debris waste containing lead (e.g., gloves) is segregated from non-lead debris waste and is disposed of as RCRA-regulated TRU waste.

3.5.10 Pu-238 Direct Oxide Reduction (P/S code WS)

P/S code WS is a new activity that uses Direct Oxide Reduction (DOR) process described for P/S code OR in TWCP-AK-2.1-006. In this process, PuO_2 and calcium metal are reacted in molten calcium chloride to produce plutonium metal. The reaction is conducted in a magnesium oxide crucible at 820°C to 875°C. Any arsenic, mercury or selenium present in the impure plutonium oxide would be driven off due to their volatility at this high temperature (TWCP-1258). The reaction proceeds to completion when excess calcium is present and when sufficient calcium chloride is available to dissolve the calcium oxide product.

After cooling, a plutonium metal button is removed by breaking the crucible. A layer of salt above the button contains unreacted oxide. All DOR salts are exposed to air to oxidize any pyrophoric metals that might be present. The salt is then either routed through aqueous recovery operations (P/S code ASP) to recover the plutonium, or discarded as waste along with the remaining calcium metal (which has been converted to calcium oxide) and magnesium oxide crucible pieces.

3.6 Material Inputs to the Waste Generation Process

Material inputs to the waste generation processes derive from four general sources: (a) feed materials, (b) associated nuclear material types, (c) chemical use, and (d) ancillary material inputs such as those related to the use of laboratory equipment and materials and glovebox maintenance activities.

3.6.1 Feed Materials Identification

The feed materials for processes that generate Pu-238 debris waste consist of the general types of materials listed in Table 2. These feed materials are obtained either from the storage vault, as process outputs from various P/S codes, or from sources outside TA-55, including other DOE facilities.

Table 2. Typical Process Feed Materials for Pu-238 Operations

Feed Material	RCRA-Regulated Substances	P/S Codes in Pu-238 Operations
Pu oxide	Pure ^{238}Pu oxide produced, separated and purified at SRS. SRS information indicates that no RCRA substances are present in this material (TWCP-1044)	GPHS, MTL, P1, SCP, WS
Intermediate Pu-238 products in purification processes (Pu oxalates, oxides, hydroxides)	Hydroxide cakes may contain Cd (D006), Pb (D008), Hg (D009), and Ag (D011). The other products typically do not contain RCRA substances	ASP
Analytical laboratory solutions	Analytical laboratory solutions are potentially contaminated with Cd (D006), Pb (D008), Hg, (D009), and Ag (D011).	R8
Crucible pieces (tantalum, magnesium oxide)	Typically pure, no RCRA substances present	ASP
Iridium metal	Typically pure, no RCRA substances present	RCI
Other matrices contaminated with Pu-238 above the discard limit (e.g., ash, salts, equipment)	Purity determined on a case-by-case basis	ASP, R8

3.6.2 Radionuclide Content Identification

The primary Pu material type input for Pu-238 processes at TA-55 is MT-83. The designation *material type* (e.g., MT-83) is used within the

DOE Complex to describe the isotopic composition of common blends of radioactive materials used within the Complex. The material type notation was developed because it is a convenient way to describe material types that have very consistent isotopic compositions. Table 3 indicates the isotopic composition of Pu-238 material types at the time the waste was characterized.

The material type provides the basis for estimating an upper bound for U-234, U-235, and Am-241 contents based on the rate of decay of their precursors, Pu-238, Pu-239 and Pu-241, respectively. The purpose of such bounding calculations is to provide a basis for identifying significant enrichment or depletion of one radionuclide versus another, based on radioassays of individual waste containers (see Section 14.3). The results of these calculations are tabulated in the last three columns of Table 3. The calculations assume that (a) none of these isotopes were

Table 3. Average Isotopic Content of Plutonium Material Type MT-83

	Plutonium Isotope (Wt. %) and Half-Life						Upper Bounds for Dimensionless Weight Ratios[a]		
Material Type (MT)	Pu-238 (87.74 yr)	Pu-239 (24120 yr)	Pu-240 (6564 yr)	Pu-241 (14.35 yr)	Pu-242 (376,300 yr)	Pu-244 (8.26 x 10^7 yr)	U-234/ Total Pu	U-235/ Total Pu	Am-241/ Total Pu
MT-83									
83%	83.89	13.8	1.9	0.32	0.09	—	0.26	0.0002	0.003
89%	89.26	10.07	0.633	0.021	0.015	—	0.28	0.0001	0.0002

[a] These ratios are calculated under the assumption that no chemical fractionation occurs and, hence, are intended to be used to identify fractionation when it is present by comparing these upper bounds to radioassay data.

Source: TWCP-698

initially present in the material, (b) the oldest Pu material in inventory dates back to 1 January 1960, and (c) the waste was packaged on 1 January 1996, making it 36 years old at that time (TWCP-698).

TA-55 processes are not expected to alter the Pu isotopic ratios of the feed material. The material type used in the process generating each waste item was documented on the WODF and DWLS (examples shown in Attachment 4). However, other radionuclides are present in most of the process wastes from decay of a Pu precursor or as a contaminant in the feed material. Table 4 lists analyses of actinide impurities in several $^{238}PuO_2$ fuel lots as received from SRS for LWRHU production.

- Np-237, the decay product of Am-241 (half-life, 458 yr), is expected to be present in minor amounts in most debris waste from processes at TA-55. It was present in the oxide fuel lots listed in Table 4, at concentrations up to 2 x 10^{-3} (relative to Pu).

- U-235 ingrowth from the decay of Pu-239 (half-life, 24,120 years) would be negligible due to the long half-life and very low levels of Pu-239 in MT-83.

- U-234 is present as a decay product of Pu-238 (half-life, 87.74 years) (Table 3). It was present in the oxide fuel lots listed in Table 4, at concentrations up to 1 x 10^{-3} (relative to Pu).

- Th-232 was also present as a contaminant in the oxide fuel lots (Table 4).

Table 4. Actinide Impurities in PuO_2 Fuel Lots for the Cassini Program

Isotope	Los Alamos Fuel Lot (μg/g Pu)				
	272	**274**	**275**	**285**	**286**
^{232}Th	1700	1800	2300	2190	1845
^{234}U	300	190	1070	720	615
^{236}Pu	<1	<1	<1	<1	<1
^{237}Np	1030	1060	1460	1500	1545
^{241}Am	46	49	71	29	36

Source: TWCP-1030

In general no correlation is expected to be seen among the different radioelements: Th, Pu, Np, U, or Am. The differences in valence states and chemical affinities among these elements are expected to result in substantial fractionation during several TA-55 and SRS processes, including ion exchange, solvent extraction, hydroxide precipitation, and dissolution.

Secondary radionuclides are also present in the waste due to processing of feed materials other than Pu-238 (TWCP-882), e.g., thermal decomposition of cellulosic debris under P/S code TDC, which is conducted in the same general vicinity as the Pu-238 operations. This activity is a potential source of local contamination for additional Am-241, Np-237, U-234, and Th-232, as well as for Am-243, Th-230, U-235, and U-238.

During TWCP characterization, the contents of each waste package undergo non-destructive analysis to provide detailed radioisotopic data. These data are used to evaluate the accuracy of AK information in accordance with *Waste Characterization Data Reconciliation with Acceptable Knowledge* (TWCP-DTP-1.2-064). The assay results are summarized in Section 14.3.

3.6.3 Chemical Content Identification

Chemical contents of Pu-238 process inputs and outputs were compiled from chemical lists contained in procedures reviewed during the process AK search and from subject matter expert (SME) input. The Pu-238 process AK report contain detailed assessments of these chemical inputs and of the applicability of EPA HWNs (TWCP-AK-2.1-009). This section summarizes the chemical inputs in the following categories:

- Acids and bases
- Gases and cryogenic fluids
- Metals
- Inorganic chemicals
- Organic chemicals

3.6.1.1 *Acids and bases.* Acids used in the TA-55 Pu-238 processes are hydrobromic acid, hydrochloric acid, hydrofluoric acid, nitric acid, and oxalic acid. Sodium hydroxide is the only base used in Pu-238 processes. No EPA HWNs are applicable to the use of these chemicals in the TA-55 Pu-238 processes for the following reasons:

- D001 (oxidizer), D002 (corrosivity), and D003 (reactivity) do not apply to the solid debris waste because there are no free liquids in this waste.

- Hydrofluoric acid is listed in Appendix VIII of 40 CFR Part 261, for its corrosive and toxic characteristics, with EPA HWN U134. However, the HWN is not applicable to the manner in which this chemical was used in the processes covered by this report.

- None of the acids or bases are F, K or P-listed chemicals.

3.6.3.2 *Gases and cryogenic fluids.* Argon is the only gas used in the TA-55 Pu-238 processes and is not identified as having hazardous characteristics in 40 CFR Part 261, including Appendix VIII in that regulation. No cryogenic fluids are used.

3.6.3.3 *Metals.* Iridium and yttrium are used in the TA-55 Pu-238 processes but are not identified as having hazardous characteristics in 40 CFR Part 261, including Appendix VIII of that regulation.

3.6.1.2 *Inorganic chemicals.* The following inorganic chemicals used in the TA-55 Pu-238 processes are not identified as having

hazardous characteristics in 40 CFR Part 261, including Appendix VIII in that regulation: aluminum oxide, diamond, ferric nitrate, magnesium chloride, magnesium oxide, silicon carbide, and sodium pyrophosphate.

3.6.1.3 *Organic chemicals.* The following organic chemicals used in the TA-55 Pu-238 processes are not identified as having hazardous characteristics in 40 CFR Part 261, including Appendix VIII in that regulation: Duco Cement, epoxy mounting resin, ethylene glycol, Fantastik, ion exchange resins, phenophthalein, sucrose, and UCAR C-34 cement.

Ethanol is identified in Appendix VIII of 40 CFR Part 261 as having hazardous characteristics (flammability). However, no HWN applies to the use of this chemical in Pu-238 processes because there are no free liquids in solid TRU waste streams.

4.0 DIVISION OF THE WASTE STREAM INTO LOTS

Waste containers in a waste stream are characterized as a campaign, in which the targeted group of waste containers to be characterized is selected based on criteria such as availability of the waste containers, waste loading level, availability of waste generator records, and hazardous waste numbers. Hence, the waste streams produced through Pu-238 activities at TA-55 will be divided into sub-streams based on TWCP characterization and certification schedule of activities.

5.0 CORRELATIONS BETWEEN WASTE STREAMS

The Pu-238 wastes generated from TA-55 between 1979 and the present were all generated as part of the same heat-source fabrication processes, which were physically separated from other TA-55 activities that processed Pu-239 material types. Waste streams TA-55-43 through TA-55-47 are closely related to each other but are not related to other waste generation activities at TA-55 involving Pu-239 processing.

6.0 ASSIGNMENT OF WASTE MATRIX CODES

Table 5 lists the waste matrix codes (WMC) assigned to each of the Pu-238 debris waste streams based on waste generation practices described in the TA-55 Waste Management Procedure, 1996 (TWCP-351), description of past segregation practices (TWCP-701, Section 2.1, page 4 of 43), and the process AK report for Pu-238 operations at TA-55 (TWCP-AK-2.1-009). The table also lists additional waste-related codes that apply to the waste streams, based on definitions and information in the *Transuranic Waste Baseline Inventory Report* (TWBIR), the TRUPACT-II Content (TRUCON) Code (DOE/WIPP-89-004/Rev.12), Radioactive Solid Waste Disposal (RSWD), and Item Description Code (IDC).

Table 5. Assignment of Waste Codes to Pu-238 Debris Waste Streams

Waste Stream	TA-55-43	TA-55-44	TA-55-45	TA-55-46	TA-55-47
Waste Description	Combustible/ noncombustible debris	Combustible/ noncombustible debris	Metal debris	Metal debris	HEPA filters
WMC	S5000	S5000	S5100	S5100	S5410
TWBIR	LA-T004 LA-T005	LA-W001	LA-T005	LA-W005	LA-T005
TRUCON codes	LA116 LA117 LA118 LA119	LA115 LA116 LA118 LA119 LA123	LA117	LA117	LA119
RSWD	None listed	A10, A14, A15, A16, A17, A18, A19, A30, A52, A55, A60, A61, A95	None listed	A30, A31, A51, A52, A61	None listed
IDC	004	001, 004, 005	None listed	001, 005	None listed

Source: AK Information Summary, R.5

7.0 ASSIGNMENT OF WASTE MATERIAL PARAMETER CODES

Table 6 lists the waste material parameter (WMP) codes assigned to each of the Pu-238 debris waste streams based on waste generation practices described in the TA-55 Waste Management Procedures (see Section 3.2), the process AK report for Pu-238 operations at TA-55 (TWCP-AK-2.1-009), a review of waste items listed for individual containers in TWCP-5086, and waste-generator information compiled in the AK Information Summary.

8.0 ASSIGNMENT OF EPA HAZARDOUS WASTE NUMBERS

8.1 F, K, and P Listings

RCRA-regulated F-listed, K-listed and P-listed materials are not present in the feed materials and are not introduced as a part of Pu-238 operations. Therefore, there are no F-listed, K-listed or P-listed constituents in solid TRU waste generated by Pu-238 operations.

Table 6. WMP Codes Applicable to Pu-238 Debris Waste Streams

WMP	TA-55-43	TA-55-44	TA-55-45	TA-55-46	TA-55-47
Iron-based Metals/Alloys (IM)	Major	Major	Major	Major	Major
Aluminum-based Metals/Alloys (AM)	—	—	Minor	—	—
Other Metals (OM)	—	Minor	—	Minor	Minor
Cellulosics (C)	Major	Major	—	—	Minor
Rubber (R)	Minor	Minor	—	—	—
Plastics (waste) (PW)	Major	Major	Minor	Minor	Minor
Organic Matrix (OR)	—	—	—	—	—
Inorganic Matrix (IN)	Minor	Minor	—	—	Major
Soils/Gravel (S)	Minor	Minor	—	—	—
Other Inorganic Materials (OI)	Major	Major	Minor	Minor	Major
Steel (packaging) (ST)	Minor	Major	Major	Major	Major
Plastics (packaging) (PP)	Minor	Minor	Minor	Minor	Minor

— None or negligible

8.2 Toxicity Listings

No D001 (ignitable), D002 (corrosive), or D003 (reactive) listings apply to solid TRU waste from Pu-238 operations because no free liquids are present.

D005 (barium), D006 (cadmium), D007 (chromium), D008 (lead), and D011 (silver) are assigned to waste streams TA-55-44 and TA-55-46 due to the presence of waste from P/S code TDC, which sometimes processes Pu-238 items.

D006 (cadmium), D007 (chromium), D008 (lead), D009 (mercury) and D011 (silver) are assigned to debris waste from P/S code R8 (waste solidification) due to the potential for hydroxide cake material to be present in the debris waste.

D008 (lead) is assigned to waste streams TA-55-44 and TA-55-46 because any waste container of Pu-238 debris that contains lead (e.g., gloves, aprons, shielding) will be assigned to one of these two waste streams.

Sampling and analysis of waste material from waste stream TA-55-43 has confirmed that this waste stream does not contain RCRA-regulated toxic metals above regulatory limits (TWCP-1698). The results support AK information that the feed material supplied by SRS is high purity, and that no RCRA-regulated metals are added to the Pu-238 materials during processing at TA-55.

9.0 VERIFICATION THAT IGNITABLE, REACTIVE, AND CORROSIVE WASTES WERE EXCLUDED

According to the WIPP WAP, "The prohibition of liquids and containerized gases prevents the shipment of corrosive, ignitable, or reactive wastes." The waste streams covered by this AK report have no listings for corrosivity, reactivity, or ignitability. Administrative controls on waste packaging were in place at various times to ensure the absence of such items from the waste stream.

- Liquids were prohibited from solid waste streams at TA-55 when the facility opened in January 1978. A waste management procedure written to cover operations at the new facility, *TA-55 Standard Operating Procedure (SOP) 406-GEN-R00*, stated that "Liquids are not permitted in any container of solid waste materials" (TWCP-3943).

- Chemical Waste Disposal Requests (see Attachment 5), introduced in June 1980, included check boxes that the waste generator was required to check if the waste contained corrosive acids or bases, or pyrophoric, flammable, corrosive, explosive, toxic, carcinogenic or highly reactive materials.

- The Certification Plan (TWCP-697) and related Generator Attachments for TA-55 (TWCP-701) were implemented in 1987. Waste generators were required to sign a statement on the WODF (see Attachment 4, pp. 4 and 5) documenting that the waste contained "no free liquids, pyrophorics, explosives, compressed gases, powders or materials other than the indicated matrix." Checkboxes were also present for indicating the presence or absence of corrosive chemicals. Full implementation of this generator statement occurred in May 1987.

- Waste management inspectors perform visual verification of the waste prior to its initial packaging, thus allowing the inspectors to verify the generator's WODF statement (TWCP-701, Sections 3.8.5 to 3.8.6).

- In addition to the above-mentioned prohibitions on explosives in waste, explosives were altogether prohibited from TA-55 until installation of the Impact Test Facility in the early 1990s. In case of a misfire or unconsumed explosives, a procedure is in place at TA-55 to ensure that explosives do not enter the waste stream (TWCP-4720).

- The Waste Profile Request Form (WPRF), which has been in use at LANL since 1991, includes a statement which must be authenticated by the waste generator, that the waste is not ignitable (flash point >200°F), reactive, or corrosive.

- The TA-55 Generator Attachments to the Certification Plan were updated in 1995 (TWCP-700) but the prohibition on liquids in the waste, and the waste management inspection, remained in effect.

Hence, since the inception of operations at TA-55, corrosive wastes have been excluded from TA-55 solid wastes through the prohibition of liquids.

Controls have also been in place to ensure the exclusion of ignitable constituents. D001 does not apply to wastes in these waste streams for the following reasons:

- Solutions are sent to the RLWTF if they are below the DL for plutonium.
- If above the DL, the solutions are sent to aqueous processes as part of chloride or nitrate operations. Aqueous recovery steps include dissolution of any solid plutonium in hydrochloric or nitric acid, followed by plutonium recovery by ion exchange. The solutions are then below the DL and are either sent to the RLWTF or to the evaporator.
- Rags that are above the DL for plutonium are thermally decomposed, which destroys any organic component.
- Rags that are below the DL for plutonium are discarded as combustible debris, but headspace gas analyses support the contention that any organic solvents that may be present are below the limits established by the WIPP WAC (Section 14.4).
- Finally, 100 percent of the drums are subjected to headspace gas analysis, and drums showing over 500 ppm total flammable VOCs are prohibited from being shipped to the WIPP. (This limit is quite conservative. For comparison, the explosive limit for acetone by itself is 25,000 ppm.)

The absence of these prohibited items is verified through radiography of each waste container and visual examination of selected containers during TWCP characterization activities. Any free liquids are absorbed onto vermiculite and discarded in an appropriate waste stream and containerized gases that are found to be present are removed, or the container is tagged as non-compliant by filing a Prohibited Waste Report (PWR) in accordance with *Nonconformance Reporting and Tracking* (TWCP-QP-1.1-007).

10.0 VERIFICATION THAT INCOMPATIBLE CHEMICALS WERE PROHIBITED

Controls are in place to ensure chemical compatibility for the waste contents and the TRUPACT-II shipping containers. Section 9.0 summarizes administrative controls in place at TA-55 that prohibit incompatible chemicals in the waste and measures taken to verify their absence. In addition, all waste containers shipped from TA-55 to TA-54 for storage were evaluated for potentially incompatible chemicals in accordance with 49 CFR Subpart C—Segregation and separation chart of hazardous materials; Section 177.848, Segregation of hazardous materials, and were determined to be in compliance with this requirement.

For waste that has been generated after the implementation of the 1987 Certification Plan, Generator Attachments, waste generators signed a statement on the WODF for each waste item specifying that the waste contained "no free liquids, pyrophorics, explosives, compressed gases, powders or materials other than the indicated matrix." Prior to the installation of the Impact Test Facility in the early 1990s, explosives were prohibited

from TA-55. In addition, waste management inspectors performed visual inspection of the waste prior to its initial packaging, thus allowing the inspectors to verify the generator's WODF statement.

Chemical compatibility analyses were performed for TRUCON codes 115 (graphite waste), 116 (combustible waste), 117 (metal waste), 118 (glass waste), 119 (filter waste), 123 (leaded rubber and metal waste), and 125 (mixed combustible/noncombustible waste), which indicated that all chemicals and the waste matrix were compatible at levels less than or equal to trace amounts (DOE/WIPP-89-004).

11.0 VERIFICATION THAT THERE ARE NO COMPRESSED GASES, FREE LIQUIDS, NONRADIONUCLIDE PYROPHORICS, SEALED CONTAINERS GREATER THAN FOUR LITERS IN VOLUME, OR >1% RADIONUCLIDE PYROPHORICS

Most gases used at the TA-55 Plutonium Facility are stored outside the building and the gas is plumbed into the glovebox from outside the building (TWCP-4164). Occasionally, a lecture bottle may have been used for a process inside the building, but these bottles were kept outside of the glovebox with the gas plumbed into the glovebox. Consequently, compressed gas cylinders or containers are not expected to be in any of the TRU wastes generated by TA-55 operations.

Spray cans, especially WD-40, were in common use in TA-55 gloveboxes until May 1992 (TWCP-4166). These were routinely discarded as metal debris waste. From 1988 until May 1992, the protocol was to vent or puncture the spray cans inside the glovebox; venting was indicated by inserting a metal wire into the valve. After May 1992, spray cans were no longer used in gloveboxes.

Verification that individual waste drums do not contain compressed gases, free liquids, or sealed containers greater than 4 L in volume is obtained from radiography of each waste container and visual examination of selected containers during TWCP characterization activities. Any free liquids are absorbed and any sealed containers greater than 4 L in volume, or unpunctured or unvented gas containers, are removed, or the container is tagged as non-compliant by filing a PWR in accordance with *Nonconformance Reporting and Tracking* (TWCP-QP-1.1-007).

The effectiveness of administrative and procedural controls on the prohibition of pyrophorics in TRU waste has been verified through testing. For items of pyrochemical salt waste, the procedures of oxygen sparging and/or carbonate oxidation have been used since May 1987 to ensure that pyrophorics were oxidized. In addition, screening tests on similar pyrochemical salts and residues (which contain higher amounts of plutonium) at the RFETS (TWCP-2501) have shown (1) no autoignition, (2) no spontaneous combustion, and (3) no sparking. Experimental results on the reactivity of direct oxide reduction (DOR) salt with water and the reactivity in air of heated calcium metal nodules from DOR salts indicate the absence of "dangerous when wet materials" and pyrophoricity in these salts (TWCP-3730, TWCP-3731, TWCP-3732).

Chemical Waste Disposal Requests dated as early as June 1980 included boxes that were required to be checked if the waste contained pyrophoric, flammable, corrosive, or explosive materials (see Attachment 5, Chemical Waste Disposal Request).

In addition, for wastes generated after the implementation of the 1987 Certification Plan, Generator Attachments, associated waste packaging procedures, and quality assurance systems, the waste generator has signed a statement on the WODF for each waste item stating that waste contains "no free liquids, pyrophorics, explosives, compressed gases, powders or materials other than the indicated matrix." The TA-55 Attachment to the Certification Plan describes how these restrictions were verified by waste management personnel (TWCP-701, Sections 3.8.5 through 3.8.7).

12.0 VERIFICATION THAT THERE ARE NO POLYCHLORINATED BIPHENYLS (PCBs) IN THE WASTE STREAM

No PCBs were introduced into the Pu-238 operations, based on documentation in TA-55 procedures reviewed during the AK investigation and summarized in lists of process inputs documented in the TA-55 process AK reports.

- All transformers known to contain PCBs have been tracked from initiation of operations of TA-55 in 1978. When any transformer oil is drained, the oil is handled by a subcontractor who is wholly responsible for its disposal; this oil does not enter the LANL disposal operations (TWCP-3568/N-82).
- Ballast in fluorescent light fixtures could contain PCBs, but at TA-55 these light fixtures are outside the gloveboxes and hence would not enter the TRU waste stream.
- Oil-filled capacitors are not known to have been used in TA-55 gloveboxes.

In addition, if the possibility exists for the waste to contain PCBs, RTR operators are required to check for indications of PCB-containing materials or PCB-contaminated materials. If there is reason to suspect that an item may contain PCBs (based on AK, operator training, or previous operator experience), then the operator submits a PWR and places a hold tag on the waste container (Section 6.6.6 and Table 3 in TWCP-DTP-1.2-008).

13.0 DETERMINATION OF THE MAXIMUM NUMBER OF CONFINEMENT LAYERS PERMITTED FOR WASTE PACKAGING

Pu-238 debris waste is primarily generated from operations performed in gloveboxes. The waste is placed directly into bag-out bags (also called inner bags) through an opening in the glovebox where the bag is attached, and the bag is then closed and detached from the glovebox. Pu-238 debris waste may also be generated from "hot jobs" outside of the glovebox, such as valve changes, or from decontamination of spills or other releases. In these cases, the waste is placed directly into one (or possibly more) inner bags at the work area.

Waste drum packaging procedures for Pu-238 debris waste streams have gone through several changes since the beginning of operations at TA-55. TRUCON code assignments made by the waste generator are compiled in the AK Information Summary. However, in the absence of this information, TRUCON Codes will be assigned to the waste container in accordance with the default packaging configurations and associated TRUCON codes shown in Table 7, that reflect the packaging protocols in effect during different periods of time at TA-55 (TWCP-816) and that are consistent with characterization data obtained by RTR (Section 14.1).

Table 7. Maximum Layers of Confinement to be Used for Pu-238 Debris Waste Streams in the Absence of More Specific Waste Characterization Data

Waste Stream	Default Layers of Confinement, based on WMC*					
	01/78 – 12/97			01/98 – present		
TA-55-43	S5000	LA125F	5 layers, 2-DTT, 3-TT	S5000	LA116E	1 layer, 1-TT-F
TA-55-44	S5100	LA117H	5 layers, 2-DTT, 3-TT	S5100	LA117C	1 layer, 1-TT-F
	S5110	LA117H	5 layers, 2-DTT, 3-TT	S5110	LA117C	1 layer, 1-TT-F
	S5120	LA118E	5 layers, 2-DTT, 3-TT	S5120	LA118B	1 layer, 1-TT-F
	S5300	LA116H	5 layers, 2-DTT, 3-TT	S5300	LA116E	1 layer, 1-TT-F
	S5311	LA123G	5 layers, 2-DTT, 3-TT	S5311	LA123C	1 layer, 1-TT-F
	S5410	LA119E	5 layers, 2-DTT, 3-TT	S5410	LA119B	1 layer, 1-TT-F
TA-55-45 TA-55-46	S5100	LA117H	5 layers, 2-DTT, 3-TT	S5100	LA117C	1 layer, 1-TT-F
	S5110	LA117H	5 layers, 2-DTT, 3-TT	S5110	LA117C	1 layer, 1-TT-F
	S5120	LA118E	5 layers, 2-DTT, 3-TT	S5120	LA118B	1 layer, 1-TT-F
TA-55-47	S5410	LA119E	5 layers, 2-DTT, 3-TT	S5410	LA119B	1 layer, 1-TT-F

* Layers of confinement for these TRUCON Codes are defined in DOE/WIPP-89-004
DTT—drum liner bag closed by twist and tape
TT—inner bag closed by twist and tape
TT-F—filtered inner bag closed by twist and tape

14.0 CONFIRMATION OF AK INFORMATION FOR WASTE STREAM

Characterization data acquired by WAP-compliant activities provide a means to confirm AK information. Radiography, radioassay, and headspace gas analysis are conducted on all retrievably stored containers of debris waste, and VE has been conducted on over 60 containers of debris waste. Relevant aspects of the data produced by these activities are summarized in the sections below, focusing on the extent to which the data confirm AK information.

14.1 Radiography Data

Radiography data are examined to confirm AK information about WMC assignments, layers of packaging, absence of prohibited items, and relative

volumes or weights of waste matrix parameters for a waste stream. Thus far, 114 containers, which comprise slightly less than 8 percent of the 1474 containers in these five waste streams (based on AK Information Summary, R.4), have undergone RTR, with the data contained in WIPP-compliant batch data reports. The following observations are made from an examination of the data summarized in Table 8:

Table 8. RTR Data for Pu-238 Debris Waste Streams

Waste stream	TA-55-43	TA-55-44	TA-55-45	TA-55-46	TA-55-47
Number of containers in waste stream	189	974	120	174	17
Number of containers with RTR data	53	14	35	11	1
Waste stream (AK) WMC	S5000	S5000	S5100	S5100	S5410
RTR WMC					
S5000	5	---	---	---	---
S5100	---	1	---	1	---
S5110	1	---	35	10	---
S5300	47	13	---	---	---
S5410	---	---	---	---	1
Average % weight					
Combustible	91	61	7	8	61
Noncombustible	9	39	93	92	39
• Metal	7	25	91	84	39
RTR PWR					
• Sealed containers > 4 liters	2	9	7	7	---
• Pressurized containers	1	---	1	---	---
• Free liquid	1	---	---	---	---
• Heavy object	---	---	---	1	---
Number of packaging layers (excluding containers with RTR PWRs)					
No layers	4	---	---	---	---
Less than or equal to 1	3	1	---	---	---
Less than or equal to 2	18	2	9	---	1
Less than or equal to 3	23	2	14	1	---
Less than or equal to 4	---	---	4	---	---
Less than or equal to 5	---	---	---	1	---
Less than or equal to 6	---	---	---	---	---
Indeterminate	1	---	---	1	---
Subtotal	49	5	27	3	1

Data from RTR batch data reports: LA00-RTR-001 (TWCP-4079), LA00-RTR-002 (TWCP-4459), LA00-RTR-018 (TWCP-4469), LA00-RTR-019 (TWCP-TBD), LA00-RTR-025 (TWCP-4457), LA00-RTR-026 (TWCP-4574), LA00-RTR-028 (TWCP-4577), LA01-RTR-001 (TWCP-4545), LA01-RTR-003 (TWCP-4572), LA01-RTR-004 (TWCP-5061), LA01-RTR-005 (TWCP-TBD), LA01-RTR-006 (TWCP-TBD), LA01-RTR-011 (TWCP-5784), LA01-RTR-012 (TWCP-5111), LA01-RTR-013 (TWCP-5147), LA01-RTR-014 (TWCP-5087), LA01-RTR-015 (TWCP-5252), LA01-RTR-016 (TWCP-5088), LA01-RTR-017 (TWCP-5155), LA01-RTR-018 (TWCP-5119), LA01-RTR-020 (TWCP-5117), LA01-RTR-021 (TWCP-5838), LA01-RTR-023 (TWCP-5267), LA01-RTR-025 (TWCP-5265), LA01-RTR-026 (TWCP-5335), LA01-RTR-032 (TWCP-5842), LA01-RTR-036 (TWCP-5846), LA01-RTR-038 (TWCP-5848), LA01-RTR-043 (TWCP-5853), LA01-RTR-047 (TWCP-6007), LA01-RTR-056 (TWCP-6011); AK Information Summary, R.4

- positive confirmation of AK WMC for all drums

- identification of prohibited waste items in 29 drums, representing 25% of the 114 drums examined, for the following reasons: sealed containers > 4 liters (25 drums), pressurized container (2 drums), free liquid (one drum), and heavy object inadequately braced (1 drum). All of these drums were assigned PWRs and require repackaging to remediate the prohibited waste item.

- confirmed the presence of 3 or fewer packaging layers for all but one drum of debris waste in waste streams TA-55-43 and TA-55-44 (excluding drums with PWRs). The number of plastic layers for this single drum was indeterminate due to the large amount of plastic packaging material present.

- confirmed the presence of 5 or fewer packaging layers for all but one drum of metal debris waste in waste streams TA-55-45 and TA-55-46 (excluding drums with PWRs). RTR data for the number of plastic layers in one drum were indeterminate.

14.2 Visual Examination Data

VE data are used to confirm AK information on waste stream descriptions, WMC, the absence of prohibited items, the number and type of confining layers, and the relative volumes and weights of waste matrix parameters. As of August 13, 2001, AK packaging and WMC information had been evaluated by VE for 52 debris waste containers in waste streams TA-55-19 and TA-55-20, in accordance with *Reconciliation of Visual Examination and Radiography Information* (TWCP-QP-1.1-028). VE results are summarized in the AK Summary Report for those waste streams (TWCP-AK-2.1-008), from which the following observations are made:

- VE confirmed the AK WMC (S5300) for all of the examined drums.

- The maximum number of confining layers observed by VE was five (for one drum), consistent with AK information indicating that the number of layers is six or less for debris waste (TWCP-816).

- No closed liners were found by VE, which confirmed AK and RTR information.

- For some of the drums, the number of confinement layers observed during VE was greater than the number of layers associated with the TRUCON code assigned for these drums by the waste generator. The default AK value indicated by Table 7 of TWCP-AK-2.1-008,R.0 was also less conservative than the VE findings. (The inconsistency was addressed in TWCP-AK-2.1-008,R.1.)

A conservative conclusion is that these discrepancies indicate that TRUCON code assignments by the waste generator must be viewed with caution, at least with

respect to waste containers packaged in 1997 when TA-55 personnel were transitioning from one packaging procedure to another.

14.3 Radioassay Data

Radioassay data are examined to confirm AK information on Pu material type and mass, the presence of other radionuclides contributing to the total activity in each drum, and evidence for fractionation of other actinides (e.g., uranium, americium) relative to Pu during material processing. Isotopic data have been obtained for drums created in 1998 when 28 parent drums containing Pu-23 debris waste were repackaged into 132 drums in order to meet wattage limits. Tables 9 and 10 summarize information relevant to these evaluations for the Pu-238 debris waste drums that have undergone isotopic analysis and radioassay.

Data in Tables 9 and 10 confirm the following AK information:

- The dominant isotope in 27 of the 28 parent drums is Pu-238. Pu-239 is dominant in one parent drum (55631), but isotopic analysis indicates that this drum contains a mixture of Pu-238 and Pu-239 material types.

- The material type is MT-83 for 27 of the 28 parent drums. The average measured percentage of Pu-238 is 77.5, showing a slight decrease (due to radioactive decay) from the initial value of 83.89 reported by AK. One drum (55631) appears to have a mixture of Pu-238 and Pu-239 material types.

- All the repackaged drums for which assay data have been reported qualify as TRU waste.

- The measured assay value for total Pu is within two standard deviations of that reported by the waste generator for all drums with complete assay results.

- Np-237 is present at low levels in 27 of the 28 parent drums, at levels similar to those reported in Table 3 (section 3.6.2). Am-243, the decay product of Pu-243, is present in 8 drums. Both of these nuclides are commonly present at low levels in TRU waste from TA-55.

- U-234, the decay product of Pu-238, is present at detectable levels in half of the parent drums. Its concentration (relative to total Pu) ranges from 0.01 to 8. One-third of the samples are above 0.3, the value expected if ingrowth from Pu-238 were its only source.

- Th-232 is present in 3 of the parent drums, consistent with data presented in Table 3.

- No U-233, U-235, or U-236 was detected, confirming AK information that these uranium isotopes are not expected to be detectable in Pu-238 process waste.

Table 9. Pu Isotopic Data for Pu-238 Debris Wastes

Waste Stream	Parent Drum	No. of Repackaged Drums	Average Composition of Repackaged Drums (wt %)					Total Measured Pu, g	Total Pu Reported by Waste Generator (± 1 stnd dev)
			Pu-238	Pu-239	Pu-240	Pu-241	Pu-242		
TA-55-43	55400	7	80.6	16.6	NR	0.20	0.40	2.13	2.85 ± 0.53
	55431	5	79.8	17.4	NR	0.24	0.37	1.81	1.55 ± 0.89
	55437	9	79.9	17.2	NR	0.23	0.31	2.28 *	3.13 ± 0.21
	55439	3	81.9	15.8	NR	0.25	0.35	0.52 *	0.65 ± 0.10
	55476	2 ⊥	81.7	15.9	NR	0.26	0.39	0.44 *	0.74 ± 0.55
	55558	1	78.8	19.2	NR	0.25	0.24	0.27	0.77 ± 0.33
	55615	5	81.3	16.4	NR	0.21	0.22	2.35	2.38 ± 0.19
	55631	2	23.6	67.6	NR	0.37	0.07	-- *	0.25 ± 0.37
	55683	7	79.6	18.1	NR	0.23	0.18	2.57	2.69 ± 0.80
	56091	6	79.6	17.5	NR	0.23	0.49	2.53	2.39 ± 0.12
	56283	3	79.4	17.8	NR	0.23	0.22	1.04	1.04 ± 0.13
	57706	1	73.7	22.8	NR	0.17	0.26	0.26	0.18 ± 0.06
TA-55-44	52686	2	71.8	23.6	NR	0.18	0.29	0.19	0.23 ± 0.09
	55403	3	79.4	17.6	NR	0.21	0.42	0.62	1.19 ± 0.50
	55451	5	82.4	15.2	NR	0.21	0.35	1.29	2.32 ± 0.68
	55452	4	79.3	17.3	NR	0.21	0.53	0.89 *	1.25 ± 0.59
	55625	6	81.5	16.1	NR	0.20	0.20	2.13	2.36 ± 0.16
	55663	5	73.9	22.8	NR	0.22	0.21	0.53 *	1.46 ± 0.16
	55668	4	82.8	15.1	NR	0.19	0.18	1.13 *	2.26 ± 0.15
	55836	2	79.2	17.9	NR	0.22	0.23	0.31	0.42 ± 0.17
	56000	1	78.3	18.8	NR	0.23	0.23	-- *	0.29 ± 0.08
	56090	9 ⊥	82.1	15.9	NR	0.21	0.16	1.91 *	3.46 ± 0.07
	56397	4 ⊥	71.9	25.1	NR	0.20	0.19	-- *	1.74 ± 0.07
TA-55-47	55605	7	82.9	14.3	NR	0.19	0.38	2.27	0.14 ± 1.60
	55695	9 ⊥	80.4	16.7	NR	0.21	0.32	1.57 *	1.30 ± 0.53
	55696	4	82.4	15.2	NR	0.23	0.33	0.56 *	2.25 ± 1.22
	55938	12	81.0	16.7	NR	0.21	0.20	2.90 *	0.15 ± 1.70
	56053	4	79.8	18.4	NR	0.22	0.16	0.88	0.53 ± 0.41
Total	28	132	—	—	—	—	—	33.4 *	40 grams
Average	—	—	77.5	19.6	NR	2.4	0.2	—	—

⊥ Isotopic averages exclude one or more repackaged drums for which isotopic data have not yet been reported.

* Total measured mass of Pu excludes one or more repackaged drums for which assay data have not yet been reported.

NR Not reported because values were below the minimum detection level for Pu-240

Data from FRAM batch data reports: LA98-3.1.4-002 (TWCP-2001), LA98-FRAM-002 (TWCP-2003), LA98-FRAM-003 (TWCP-2116), LA98-FRAM-004 (TWCP-2005), LA98-FRAM-005 (TWCP-2257), LA98-FRAM-006 (TWCP-2256), LA98-FRAM-007 (TWCP-2631), LA98-FRAM-008 (TWCP-2708), LA00-FRAM-002 (TWCP-5571), LA01-FRAM-020 (TWCP-6067), LA01-FRAM-021 (TWCP-TBD), LA01-FRAM-025 (TWCP-TBD)

Data from radioassay batch data reports: LA98-PAN-001 (TWCP-2002), LA98-PAN-002 (TWCP-2004), LA98-PAN-003 (TWCP-2158), LA98-PAN-004 (TWCP-2240), LA98-PAN-005 (TWCP-2456), LA98-TGS-001 (TWCP-1725), LA98-TGS-002 (TWCP-2713), LA98-TGS-003 (TWCP-2732), LA99-PAN-001 (TWCP-2630), LA00-HENC-002 (TWCP-6069), LA01-HENC-017 (TWCP-TBD)

Data from AK Information Summary, R.4, Appendix H

Table 10. Secondary Radionuclides Detected in Pu-238 Debris Wastes*

Waste Stream	Parent Drum	Am241	Am243	Np237	Ac227	Cs137	U234	U238	Th230	Th232
TA-55-43	55400			X			X			
	55431			X			X			X
	55437			X			X			
	55439			X			X			
	55476									
	55558			X						
	55615			X						
	55631	X		X		X				
	55683			X			X			
	56091		X	X			X			
	56283			X			X			
	57706		X	X	X	X		X		
TA-55-44	52686			X						
	55403			X						
	55451			X			X			
	55452	X	X	X		X	X			
	55625			X			X			
	55663		X	X		X				
	55668		X	X						
	56000			X				X		
	56090		X	X			X			
	56397	X	X	X			X	X	X	
TA-55-47	55605			X			X	X		
	55695		X	X						
	55696			X			X	X		X
	55938			X						
	56053			X				X		X
Total	28	3	8	27	1	4	14	6	1	3

Data from FRAM batch data reports: LA98-3.1.4-002 (TWCP-2001), LA98-FRAM-002 (TWCP-2003), LA98-FRAM-003 (TWCP-2116), LA98-FRAM-004 (TWCP-2005), LA98-FRAM-005 (TWCP-2257), LA98-FRAM-006 (TWCP-2256), LA98-FRAM-007 (TWCP-2631), LA98-FRAM-008 (TWCP-2708), LA00-FRAM-002 (TWCP-5571), LA01-FRAM-020 (TWCP-6067), LA01-FRAM-021 (TWCP-TBD), LA01-FRAM-025 (TWCP-TBD)

* A radionuclide was considered to be present if it was detected with an uncertainty less than 21.5% (TWCP-2130).

- Ac-227, Am-241, Cs-137, Th-230, and U-238 were detected in 1 to 6 of the parent drums.

14.4 Headspace Gas Data

Headspace gas data are examined to confirm AK information about the presence or absence of hazardous constituents in a given waste stream, and the assignment of each drum to the appropriate mixed or nonmixed waste stream. Table 11 summarizes VOC target analyte concentrations and total flammability for

headspace gas samples from 31 containers assigned to waste streams TA-55-43, TA-55-44, and TA-55-47. (No approved WAP-compliant data are yet available for drums from waste streams TA-55-45 or TA-55-46.) These data confirm the following AK information:

- Five VOCs were detected above the minimum detection limit (MDL) in one or more of these 3 waste streams—toluene, acetone, butanol, methanol, and methyl ethyl ketone. Because these chemicals are present as solvents used in the manufacturing of plastics, their presence in headspace gases in drums without any other known source of these VOCs is attributed to (1) off-gassing of constituents in the tape and plastic bags used to package waste items, and (2) radiolytic degradation of the plastic, rubber, tape, Tygon, and similar items in the waste (Attachment C in TWCP-2102).
- All Upper Concentration Limit (UCL_{90}) values were below their program required quantitation limits (PRQL).
- Acetone was the only target analyte detected (in one drum) above its PRQL.
- No Tentatively Identified Compounds (TICs) were detected.
- All drums were below the WIPP WAC limits for flammability. No methane was detected in any of the drums, and hydrogen concentrations were lower by more than an order of magnitude than the WAC limit of 5 percent.

15.0 CITED PROCEDURES AND REQUIREMENTS DOCUMENTS

- 40 CFR Part 260—Hazardous Waste Management System: General
- 40 CFR Part 261—Identification and Listing of Hazardous Wastes
- 49 CFR Subpart C—Segregation and separation chart of hazardous materials. Section 177.848, Segregation of hazardous materials
- *Acceptable Knowledge Documentation* (TWCP-QP-1.1-021)
- *Nonconformance Reporting and Tracking* (TWCP-QP-1.1-007)
- *Records Management* (TWCP-QP-1.1-004)
- *Transuranic Package Transporter (TRUPACT)-II Content Codes* (DOE/WIPP-89-004)
- *Transuranic Waste Baseline Inventory Report* (CAO-94-1005) *(TWBIR)*
- *Waste Analysis at Facilities that Generate, Treat, Store and Dispose of Hazardous Waste* (EPA-530-R-94-024)
- *Waste Analysis Plan, to the Hazardous Waste Facility Permit Issued to the Waste Isolation Pilot Plant* (EPA No. NM4890139088, Attachment B)
- *Waste Characterization Data Reconciliation with Acceptable Knowledge* (TWCP-DTP-1.2-064)

Table 11. Headspace Gas Data (ppmv) for Target Analytes and Total Flammability in Pu-238 Debris Waste Streams

ANALYTE	MDL	TA-55-43 (10 drums)			TA-55-44 (15 drums)			TA-55-47 (6 drums)		
		Mean	UCL_{90}*	Maximum	Mean	UCL_{90}*	Maximum	Mean	UCL_{90}*	Maximum
Benzene	10	0.8	0.8	—	0.8	0.8	—	0.8	0.8	—
Bromoform	10	1.5	1.5	—	1.5	1.5	—	1.5	1.5	—
Carbon Tetrachloride	10	1.2	1.2	—	1.2	1.2	—	1.2	1.2	—
Chlorobenzene	10	2.0	2.0	—	2.0	2.0	—	2.0	2.0	—
Chloroform	10	1.3	1.3	—	1.3	1.3	—	1.3	1.3	—
1,1-Dichloroethane	10	1.3	1.3	—	1.3	1.3	—	1.3	1.3	—
1,2-Dichloroethane	10	1.1	1.1	—	1.1	1.1	—	1.1	1.1	—
1,1-Dichloroethene	10	1.0	1.0	—	1.0	1.0	—	1.0	1.0	—
Cis-1,2-Dichloroethylene	10	1.6	1.6	—	1.6	1.6	—	1.6	1.6	—
Ethyl Benzene	10	2.0	2.0	—	2.0	2.0	—	2.0	2.0	—
Ethyl Ether	10	1.0	1.0	—	1.0	1.0	—	1.0	1.0	—
Methylene Chloride	10	0.6	0.6	—	0.6	0.6	—	0.6	0.6	—
1,1,2,2-Tetrachloroethane	10	2.1	2.1	—	2.1	2.1	—	2.1	2.1	—
Tetrachloroethene	10	1.6	1.6	—	1.6	1.6	—	1.6	1.6	—
Toluene	10	1.8	1.8	4	2.2	2.8	4	2.1	2.1	5
1,1,2-Trichloro 1,2,2-trifluoroethane (Freon-113)	10	1.1	1.1	—	1.1	1.1	—	1.1	1.1	—
1,1,1-Trichloroethane	10	1.3	1.3	—	1.3	1.3	—	1.3	1.3	—
Trichloroethene	10	1.2	1.2	—	1.2	1.2	—	1.2	1.2	—
m-Xylene and p-xylene	10	3.1	3.1	—	3.1	3.1	—	3.1	3.1	—
o-Xylene	10	1.9	1.9	—	1.9	1.9	—	1.9	1.9	—
Acetone	100	20.9	47.8	56	36.3	52.5	130	16.8	16.8	—
Butanol	100	15.7	15.7	44	13.9	23.3	29	12.5	12.5	—
Methanol	100	14.5	14.5	39	15.2	36.7	48	11.8	11.8	—
Methyl ethyl ketone	100	18.7	18.7	—	18.9	18.9	22	18.7	18.7	—
Methyl isobutyl ketone	100	12.4	12.4	—	12.4	12.4	—	12.4	12.4	—
Total Flammability*	500	104 ± 32		194	119 ± 43		248	94.2 ± 1.4		97.1

Source: TWCP-6357, 6358, 6359; VOC target analyte list for debris waste from WIPP WAP, Table B3-2.

— analyte not detected; ppmv, part per million by volume; MDL, Method Detection Limit; PRQL, Program Required Quantitation Limit; UCL90, 90% Upper Concentration Limit

— Not applicable

* For analytes below the MDL, UCL_{90} and total flammability concentrations are calculated by assuming concentrations were one-half of the MDL values, as described in the UCL90 records package for each waste stream

ACCEPTABLE KNOWLEDGE ROADMAP

Waste Streams: TA-55-43, TA-55-44, TA-55-45, TA-55-46, TA-55-47.

Copies of these documents are in the TWCP RMDC Center. Refer to *Records Management* (TWCP-QP-1.1-004) for information on requesting copies.

TWCP Record No.	Information Category Code	Information	Source	Summary	Limitations
AP-SWO-006,R.3.1	A	Describes how the TRU Waste Storage Record (TWSR) is prepared, reviewed, submitted, and entered into a TRU waste database	*Review and completion of TWSR*	Section 8.6 describes how waste generator information submitted on the TWSR, as well as other receipt and storage information, is entered into the LANL TRU Waste Database for TRU waste stored at TA-54.	None
NMT7-AP-TA55-018,R3	A	Contains waste generator information required by the LANL TRU Waste Certification Plan	*TA-55 Transuranic Waste Interface Document (TWID)*	Contains information on waste characterization, waste packaging configurations, and TRUCON codes for newly-generated TA-55 waste. Describes how waste generator information in the TA-55 Waste Management System (WMS) database is certified and maintained for waste generated at the TA-55 facility. Contains information on current and projected waste stream volumes.	Document does not give information about RCRA constituents introduced or present in the processes
QP-TP-WMS-000.001	B	Compilation of TA-55 waste generator information, for individual waste containers.	TA-55 Waste Management System (WMS)	Certified and current database of waste container identifiers, waste codes (e.g., IDC, RSWD, EPA HWNs), assay results, packaging dates, waste material content and generating processes for TA-55 wastes.	Overview document – Generator Attachments provide more detailed information.

* Information Category Codes: A = forms intended for use in waste certification, B = data from controlled databases and published documents, C = unpublished data, and D = interviews, memos, and letters

TWCP Record No.	Information Category Code	Information	Source	Summary	Limitations
TWCP-351	B	Procedure for waste management practices at TA-55	TA-55 document 539-GEN-R02.	Document describes TA-55 waste management practices for solid and liquid wastes	None
TWCP-352	B	Description of plutonium recovery processes	*Wastes from Plutonium Conversion and Scrap Recovery Operations*, LA-11069-MS, March 1988.	Document describes the Pu residues and the various treatment approaches used in recovering plutonium from scrap	Document does not give information about RCRA constituents introduced or present in the processes
TWCP-697	C	Waste was controlled to meet WIPP WAC requirements as early as 1983.	Los Alamos Certification Plan, 1983	Waste was controlled to meet WIPP WAC requirements as early as 1983. Generator Attachments were used to describe and reference specific generator procedures.	Overview document – Generator Attachments provide more detailed information.
TWCP-698	B	Gives Material Type compositions	NMT Memo, NMT-7 WM/EC-96-032 Benchmark Environmental Corp. Memo, AL-7193 BEC	Gives Material Type compositions	Does not give information on how material may fractionate in TA-55 waste processes.
TWCP-700	C	*Generator Attachment* to the *Certification Plan*	*TA-55 Attachment, 1955*, TRUWM-TA55-CPA-03, R00	Documents controls to meet WIPP WAC were implemented and how independent verification was accomplished.	Information is not extremely detailed.
TWCP-701	C	*Generator Attachment* to the *Certification Plan*	*TA-55 Attachment, 1987*, TRU-MST12-CPA-03,R00	Documents controls to meet WIPP WAC were implemented and how independent verification was accomplished.	Information is not extremely detailed.
TWCP-816	D	Jim Foxx Interview on Number of Layers of Packaging	C.L. Foxx, Los Alamos National Laboratory	Provides an explanation of why some waste containers may be packaged with 6 layers of confinement	No Direct way to differentiate between and 6 layers of packaging

* Information Category Codes: A = forms intended for use in waste certification, B = data from controlled databases and published documents, C = unpublished data, and D = interviews, memos, and letters

TWCP Record No.	Information Category Code	Information	Source	Summary	Limitations
TWCP-882 (UCNI)	D	Secondary Radionuclides and Toxic Metals in TA-55 TRU Waste	Memo from Jim Foxx	Lists additional radionuclides and metals potentially in waste, subdivided by P/S code. Covers time period from 1978 to present.	Best information available, but it is based on worker recollection because other records are not available.
TWCP-886	C	Color Flow Diagram of Pu-processes at TA-55.	Diagram from Jim Foxx	Indicates that process inputs are thermally treated and that heavy metals from process inputs end up in the nitric acid evaporator bottoms.	Does not indicate solvent input to processes.
TWCP-887	D	Co-mingling of Defense and Non-Defense TRU Waste	Memo from Jim Foxx	Wastes generated from defense and non-defense activities were not segregated at TA-55 through 1997	None
TWCP-1030	C	Waste characterization (P/S LWRHU)	LANL Report number LA-13143-MS pp. 5-6, 7-8, 17-18.	Summarized analytical results of as-received and partially processed Pu-238 materials used in the Cassini LWRHU process.	Materials in these waste streams generally would have been produced as the result of processing many of the lots.
TWCP-1037	D	^{238}Pu fabrication process description ; waste characterization	Written information obtained from a TA-55 waste management expert	Detailed information of all facets of Pu-238 fabrication activities supports conclusion that these waste streams are non-mixed.	References to documents providing additional information are not provided in the memo, but have been added to the AK Summary Report.
TWCP-1044	D	Waste characterization	SRS Memo NMS-EHB-970073, March 12, 1997	Describes the SRS process for producing the Pu-238 that was used at TA-55 and presents analyses for metals in the Cassini material.	No flow diagram included.
TWCP-1698	C	Analytical results for Pu-238 debris waste in drums assigned to TA-55-43, lot no. 1	Report: Sampling and Analysis Project Validates Acceptable Knowledge on TA-55-43, Lot No. 1 (sent to New Mexico Environment Department)	Confirms absence of non-radioactive hazardous chemicals in TA-55-43	Data were obtained prior to issuance of the WAP
TWCP-1725	A	Radioassay data for drums from Pu-238 waste streams	LA98-TGS-001	Radioassay data	None

* Information Category Codes: A = forms intended for use in waste certification, B = data from controlled databases and published documents, C = unpublished data, and D = interviews, memos, and letters

TWCP Record No.	Information Category Code	Information	Source	Summary	Limitations
TWCP-2001	A	Isotopic data for drums from Pu-238 waste streams	LA98-3.4.1-002	Concentrations of Pu isotopes and secondary radionuclides, relative to total Pu	None
TWCP-2002	A	Radioassay data for drums from Pu-238 waste streams	LA98-PAN-001	Radioassay data	None
TWCP-2003	A	Isotopic data for drums from Pu-238 waste streams	LA98-FRAM-002	Concentrations of Pu isotopes and secondary radionuclides, relative to total Pu	None
TWCP-2004	A	Radioassay data for drums from Pu-238 waste streams	LA98-PAN-002	Radioassay data	None
TWCP-2005	A	Isotopic data for drums from Pu-238 waste streams	LA98-FRAM-004	Concentrations of Pu isotopes and secondary radionuclides, relative to total Pu	None
TWCP-2102	B	Presence of VOCs in headspace gas resulting from off-gassing and radiolytic degradation of plastics	Waste Determination Report for Waste Stream TA-55-43 Lot No. 01, Report LA-UR-98-3610, by Rogers et al.	Reviews published literature and presents data and calculations supporting that VOCs are present in headspace gas of TRU waste containers as a result of off-gassing and radiolytic degradation of plastics	None
TWCP-2116	A	Isotopic data for drums from Pu-238 waste streams	LA98-FRAM-003	Concentrations of Pu isotopes and secondary radionuclides, relative to total Pu	None
TWCP-2130	D	Estimate of the minimum detection limit for Am-243, Np-237, Pa-231, and Th-232 for FRAM analyses	Criteria for reporting Am-243, Np-237, Pa-231, and Th-232 on mobile PAN radioassay data sheets	If the error in the peak area for the isotopes Am-243, Np-237, Pa-231, and Th-232 is greater than 21.5% in the FRAM report, then that isotope is considered to be below the minimum detectable activity.	Memo refers specifically to PAN radioassay data, but the same reasoning is applied to TGS and HENC assay data as well, and to all radionuclides detectable by FRAM.
TWCP-2158	A	Radioassay data for drums from Pu-238 waste streams	LA98-PAN-003	Radioassay data	None

* Information Category Codes: A = forms intended for use in waste certification, B = data from controlled databases and published documents, C = unpublished data, and D = interviews, memos, and letters

TWCP Record No.	Information Category Code	Information	Source	Summary	Limitations
TWCP-2240	A	Radioassay data for drums from Pu-238 waste streams	LA98-PAN-004	Radioassay data	None
TWCP-2256	A	Isotopic data for drums from Pu-238 waste streams	LA98-FRAM-006	Concentrations of Pu isotopes and secondary radionuclides, relative to total Pu	None
TWCP-2257	A	Isotopic data for drums from Pu-238 waste streams	LA98-FRAM-005	Concentrations of Pu isotopes and secondary radionuclides, relative to total Pu	None
TWCP-2456	A	Radioassay data for drums from Pu-238 waste streams	LA98-PAN-005	Radioassay data	None
TWCP-2501	B	"Backlog Waste Reassessment Baseline Book, Waste Form 34"	Rocky Flats Environmental Technology Site Report 1995	Page WF34-10 contains results of tests for corrosivity	Tests are on residues rather than waste that is lower in Pu content; hence, they are conservative.
TWCP-2630	A	Radioassay data for drums from Pu-238 waste streams	LA99-PAN-001	Radioassay data	None
TWCP-2631	A	Isotopic data for drums from Pu-238 waste streams	LA98-FRAM-007	Concentrations of Pu isotopes and secondary radionuclides, relative to total Pu	None
TWCP-2708	A	Isotopic data for drums from Pu-238 waste streams	LA98-FRAM-008	Concentrations of Pu isotopes and secondary radionuclides, relative to total Pu	None
TWCP-2713	A	Radioassay data for drums from Pu-238 waste streams	LA98-TGS-002	Radioassay data	None
TWCP-2732	A	Radioassay data for drums from Pu-238 waste streams	LA98-TGS-003	Radioassay data	None
TWCP-3568/N-82 (UCNI)	C	Clarification of specific processes within the nitrate operations at TA-55	Jim Foxx, SME, response to comments received on the draft Acceptable Knowledge Summary Report for TA-55 Nitrate Operations, 2/25/00	Resolutions to the questions and issues raised by Pam Rogers during her review of the Acceptable Knowledge Summary Report for TA-55 Nitrate Operations, 2/25/00	Information is based on SME knowledge.

* Information Category Codes: A = forms intended for use in waste certification, B = data from controlled databases and published documents, C = unpublished data, and D = interviews, memos, and letters

TWCP Record No.	Information Category Code	Information	Source	Summary	Limitations
TWCP-3730 (UCNI)	B	Pyrophoricity characterization	Characterization of Direct Oxide Salts (LA-CP-95-0098)	Hydrogen generation and pyrophoricity of DOR salts. Also gives reference for MSE, ER, and Cr-containing salts.	None
TWCP-3731	D	Sodium pyrophoricity in pyrochemical salts	Memo (MST-12-ARO-88-052)	Treatment of sodium in salts is effective	Sodium only
TWCP-3732	C	Experimental data on calcium pyrophoricity in salts	Memo (MST-12-ARO-88-077)	Treatment of calcium in salts is effective	Calcium only
TWCP-3943	B	Procedure for Waste Management at TA-55	TA-55 Document, 406-GEN-R00	Contains information on waste management procedures in 1978	None, but doesn't address today's waste management concerns
TWCP-4164	D	Answers to questions about various P/S codes	Interview with Jim Foxx, 10/16/00	Answers to questions on use of gases.	Information is based on SME knowledge.
TWCP-4166	D	Answers to questions on disposal of spray cans used in gloveboxes	Interview with Jim Foxx, 10/17/00	Answers to questions on disposal of spray cans used in gloveboxes.	Information is based on SME knowledge.
TWCP-4457	A	RTR data for drums from Pu-238 waste streams	LA00-RTR-025	RTR data on prohibited items, WMC, packaging layers, and estimated volumes and weights of waste material parameters in drum	None
TWCP-4459	A	RTR data for drums from Pu-238 waste streams	LA00-RTR-002	RTR data on prohibited items, WMC, packaging layers, and estimated volumes and weights of waste material parameters in drum	None
TWCP-4469	A	RTR data for drums from Pu-238 waste streams	LA00-RTR-018	RTR data on prohibited items, WMC, packaging layers, and estimated volumes and weights of waste material parameters in drum	None

* Information Category Codes: A = forms intended for use in waste certification, B = data from controlled databases and published documents, C = unpublished data, and D = interviews, memos, and letters

TWCP Record No.	Information Category Code	Information	Source	Summary	Limitations
TWCP-4545	A	RTR data for drums from Pu-238 waste streams	LA01-RTR-001	RTR data on prohibited items, WMC, packaging layers, and estimated volumes and weights of waste material parameters in drum	None
TWCP-4572	A	RTR data for drums from Pu-238 waste streams	LA01-RTR-003	RTR data on prohibited items, WMC, packaging layers, and estimated volumes and weights of waste material parameters in drum	None
TWCP-4573	A	RTR data for drums from Pu-238 waste streams	LA00-RTR-026	RTR data on prohibited items, WMC, packaging layers, and estimated volumes and weights of waste material parameters in drum	None
TWCP-4577	A	RTR data for drums from Pu-238 waste streams	LA00-RTR-028	RTR data on prohibited items, WMC, packaging layers, and estimated volumes and weights of waste material parameters in drum	None
TWCP-4720	B	Describes the procedure to be taken at TA-55 in the event of a misfire or unconsumed explosives (from the Impact Test Facility 40-mm gun, P/S codes ITF and ITF4) to ensure that explosives do not enter the waste stream	40-mm Powder Breech Project Waste Management Plan, Rev. 2 (issued March 27, 2000)	Procedure to be taken at TA-55 in the event of a misfire or unconsumed explosives (from the Impact Test Facility 40-mm gun) to ensure that explosives do not enter the waste stream	Does not appear to be a controlled document. Without revision history, cannot tell when this document was first issued, and how the potential for unconsumed explosives was addressed when the Impact Test Facility (ITF) began in 1996
TWCP-4835	A	RTR data for drums from Pu-238 waste streams	LA00-RTR-001	RTR data on prohibited items, WMC, packaging layers, and estimated volumes and weights of waste material parameters in drum	None

* Information Category Codes: A = forms intended for use in waste certification, B = data from controlled databases and published documents, C = unpublished data, and D = interviews, memos, and letters

TWCP Record No.	Information Category Code	Information	Source	Summary	Limitations
TWCP-5086	B	P/S Codes for TA-55 Waste items, listed by drum	P/S codes for waste items in individual drums are either from the TA-55 Waste Management System or from the certified data base	P/S Codes for drums that underwent VE	Only some drums are included
TWCP-5087	A	RTR data for drums from Pu-238 waste streams	LA01-RTR-014	RTR data on prohibited items, WMC, packaging layers, and estimated volumes and weights of waste material parameters in drum	None
TWCP-5088	A	RTR data for drums from Pu-238 waste streams	LA01-RTR-016	RTR data on prohibited items, WMC, packaging layers, and estimated volumes and weights of waste material parameters in drum	None
TWCP-5110	A	RTR data for drums from Pu-238 waste streams	LA01-RTR-004	RTR data on prohibited items, WMC, packaging layers, and estimated volumes and weights of waste material parameters in drum	None
TWCP-5111	A	RTR data for drums from Pu-238 waste streams	LA01-RTR-012	RTR data on prohibited items, WMC, packaging layers, and estimated volumes and weights of waste material parameters in drum	None
TWCP-5117	A	RTR data for drums from Pu-238 waste streams	LA01-RTR-020	RTR data on prohibited items, WMC, packaging layers, and estimated volumes and weights of waste material parameters in drum	None
TWCP-5119	A	RTR data for drums from Pu-238 waste streams	LA01-RTR-018	RTR data on prohibited items, WMC, packaging layers, and estimated volumes and weights of waste material parameters in drum	None

* Information Category Codes: A = forms intended for use in waste certification, B = data from controlled databases and published documents, C = unpublished data, and D = interviews, memos, and letters

TWCP Record No.	Information Category Code	Information	Source	Summary	Limitations
TWCP-5147	A	RTR data for drums from Pu-238 waste streams	LA01-RTR-013	RTR data on prohibited items, WMC, packaging layers, and estimated volumes and weights of waste material parameters in drum	None
TWCP-5155	A	RTR data for drums from Pu-238 waste streams	LA01-RTR-017	RTR data on prohibited items, WMC, packaging layers, and estimated volumes and weights of waste material parameters in drum	None
TWCP-5163	B	Waste generator records for 5 drums of TA-55 combustible debris waste packaged in 1985-86	Radioactive Solid Waste Disposal (RSWD) Records	Lists P/S codes (embedded in waste item identifiers) for drums S855627, S862004, S862274, S862456, and S862286.	From noncertified TRU waste data base
TWCP-5252	A	RTR data for drums from Pu-238 waste streams	LA01-RTR-015	RTR data on prohibited items, WMC, packaging layers, and estimated volumes and weights of waste material parameters in drum	None
TWCP-5265	A	RTR data for drums from Pu-238 waste streams	LA01-RTR-025	RTR data on prohibited items, WMC, packaging layers, and estimated volumes and weights of waste material parameters in drum	None
TWCP-5267	A	RTR data for drums from Pu-238 waste streams	LA01-RTR-023	RTR data on prohibited items, WMC, packaging layers, and estimated volumes and weights of waste material parameters in drum	None
TWCP-5335	A	RTR data for drums from Pu-238 waste streams	LA01-RTR-026	RTR data on prohibited items, WMC, packaging layers, and estimated volumes and weights of waste material parameters in drum	None
TWCP-5571	A	Isotopic data for drums from Pu-238 waste streams	LA00-FRAM-002	Concentrations of Pu isotopes and secondary radionuclides, relative to total Pu	None

* Information Category Codes: A = forms intended for use in waste certification, B = data from controlled databases and published documents, C = unpublished data, and D = interviews, memos, and letters

TWCP Record No.	Information Category Code	Information	Source	Summary	Limitations
TWCP-5784	A	RTR data for drums from Pu-238 waste streams	LA01-RTR-011	RTR data on prohibited items, WMC, packaging layers, and estimated volumes and weights of waste material parameters in drum	None
TWCP-5838	A	RTR data for drums from Pu-238 waste streams	LA01-RTR-021	RTR data on prohibited items, WMC, packaging layers, and estimated volumes and weights of waste material parameters in drum	None
TWCP-5842	A	RTR data for drums from Pu-238 waste streams	LA01-RTR-032	RTR data on prohibited items, WMC, packaging layers, and estimated volumes and weights of waste material parameters in drum	None
TWCP-5846	A	RTR data for drums from Pu-238 waste streams	LA01-RTR-036	RTR data on prohibited items, WMC, packaging layers, and estimated volumes and weights of waste material parameters in drum	None
TWCP-5848	A	RTR data for drums from Pu-238 waste streams	LA01-RTR-038	RTR data on prohibited items, WMC, packaging layers, and estimated volumes and weights of waste material parameters in drum	None
TWCP-5853	A	RTR data for drums from Pu-238 waste streams	LA01-RTR-043	RTR data on prohibited items, WMC, packaging layers, and estimated volumes and weights of waste material parameters in drum	None
TWCP-6007	A	RTR data for drums from Pu-238 waste streams	LA01-RTR-047	RTR data on prohibited items, WMC, packaging layers, and estimated volumes and weights of waste material parameters in drum	None
TWCP-6011	A	RTR data for drums from Pu-238 waste streams	LA01-RTR-056	RTR data on prohibited items, WMC, packaging layers, and estimated volumes and weights of waste material parameters in drum	None

* Information Category Codes: A = forms intended for use in waste certification, B = data from controlled databases and published documents, C = unpublished data, and D = interviews, memos, and letters

TWCP Record No.	Information Category Code	Information	Source	Summary	Limitations
TWCP-6067	A	Isotopic data for drums from Pu-238 waste streams	LA01-FRAM-020	Concentrations of Pu isotopes and secondary radionuclides, relative to total Pu	None
TWCP-6069	A	Radioassay data for drums from Pu-238 waste streams	LA00-HENC-002	Radioassay data	None
TWCP-6357	A	UCL90 calculations for headspace gas concentrations in drums from waste stream TA-55-44	UCL90 Calculations for TA-55-44	UCL90 calculations for headspace gas concentrations in drums from waste stream TA-55-44, based on waste stream assignment of drums in the AK Information Summary, R.5	None
TWCP-6358	A	UCL90 calculations for headspace gas concentrations in drums from waste stream TA-55-43	UCL90 Calculations for TA-55-43	UCL90 calculations for headspace gas concentrations in drums from waste stream TA-55-44, based on waste stream assignment of drums in the AK Information Summary, R.5	None
TWCP-6359	A	UCL90 calculations for headspace gas concentrations in drums from waste stream TA-55-47	UCL90 Calculations for TA-55-47	UCL90 calculations for headspace gas concentrations in drums from waste stream TA-55-44, based on waste stream assignment of drums in the AK Information Summary, R.5	None
TWCP-TBD	A	Radioassay data for drums from Pu-238 waste streams	LA01-HENC-017	Radioassay data	Has not yet completed Project-level review
TWCP-TBD	A	RTR data for drums from Pu-238 waste streams	LA00-RTR-019	RTR data on prohibited items, WMC, packaging layers, and estimated volumes and weights of waste material parameters in drum	Awaiting review and approval from CBFO for review of pre-WAP RTR video
TWCP-TBD	A	RTR data for drums from Pu-238 waste streams	LA01-RTR-005	RTR data on prohibited items, WMC, packaging layers, and estimated volumes and weights of waste material parameters in drum	Awaiting review and approval from CBFO for review of pre-WAP RTR video

* Information Category Codes: A = forms intended for use in waste certification, B = data from controlled databases and published documents, C = unpublished data, and D = interviews, memos, and letters

TWCP Record No.	Information Category Code	Information	Source	Summary	Limitations
TWCP-TBD	A	RTR data for drums from Pu-238 waste streams	LA01-RTR-006	RTR data on prohibited items, WMC, packaging layers, and estimated volumes and weights of waste material parameters in drum	Awaiting review and approval from CBFO for review of pre-WAP RTR video
TWCP-TBD	A	Isotopic data for drums from Pu-238 waste streams	LA01-FRAM-021	Concentrations of Pu isotopes and secondary radionuclides, relative to total Pu	Has not yet completed Project-level review
TWCP-TBD	A	Isotopic data for drums from Pu-238 waste streams	LA01-FRAM-025	Concentrations of Pu isotopes and secondary radionuclides, relative to total Pu	Has not yet completed Project-level review
TWCP-AK-2.1-003,R.2	B	Generators interview and TWCP AK references	*Process Acceptable Knowledge Summary Report for Metal Operations at TA-55*	Detailed information on each P/S code for metal operations at TA-55	None
TWCP-AK-2.1-005,R.2	B	Generators interview and TWCP AK references	*Process Acceptable Knowledge Summary Report for Nitrate Operations at TA-55*	Detailed information on each P/S code for nitrate operations at TA-55	None
TWCP-AK-2.1-007,R.2	A	Generators interview and TWCP AK references	*Process Acceptable Knowledge Summary Report for Special Processing Operations at TA-55*	Detailed information on each P/S code for special processing operations at TA-55	None
TWCP-AK-2.1-008,R.2/IC1	A	Results of VE conducted as quality control check on RTR for Summary Category Group S5000 (debris waste)	*Acceptable Knowledge Summary Report for Waste Streams TA-55-19 and TA-55-20*	Section 14.2 summarizes results of VE conducted on drums of combustible debris waste from waste streams TA-55-19 and TA-55-20 (WMC S5300), in order to establish site-specific miscertification rate for Summary Category Group S5000 (debris)	Results may not be representative of Pu-238 debris waste
TWCP-AK-2.1-009,R.2	B	Generators interview and TWCP AK references	*Process Acceptable Knowledge Summary Report for Plutonium-238 Operations at TA-55*	Detailed information on each P/S code for plutonium-238 operations at TA-55	None

* Information Category Codes: A = forms intended for use in waste certification, B = data from controlled databases and published documents, C = unpublished data, and D = interviews, memos, and letters

TWCP Record No.	Information Category Code	Information	Source	Summary	Limitations
TWCP-PLAN-0.2.7-001,R.4	C	LANL TA-55 waste management database, LANL TA-54 TRU waste management database, and TWCP AK references based on generator's original data	*Los Alamos National Laboratory Transuranic Waste Characterization AK Information Summary*	Analysis of RTR, FRAM and radioassay data in Sections 14.1 and 14.3 was based on assignment of drums in the AK Information Summary, R.4. This analysis was not redone when the Summary was updated to R.5 because the changes were minor for the Pu238 waste streams.	Out-of-date. R.5 was issued shortly after this AK waste stream report started its review cycle. Used R.5 to update all of this AK report with the exception of Sections 14.1 (RTR data) and 14.3 (radioassay data).
TWCP-PLAN-0.2.7-001,R.5	C	LANL TA-55 waste management database, LANL TA-54 TRU waste management database, and TWCP AK references based on generator's original data	*Los Alamos National Laboratory Transuranic Waste Characterization AK Information Summary*	Detailed information on each waste drum and waste stream. Used throughout this report, except for analysis of RTR, FRAM, and radioassay data in Sections 14.1 and 14.3.	Reliability and completeness of waste generator data is highly variable; this information summary is continually being revised and updated

* Information Category Codes: A = forms intended for use in waste certification, B = data from controlled databases and published documents, C = unpublished data, and D = interviews, memos, and letters

MAP OF LANL

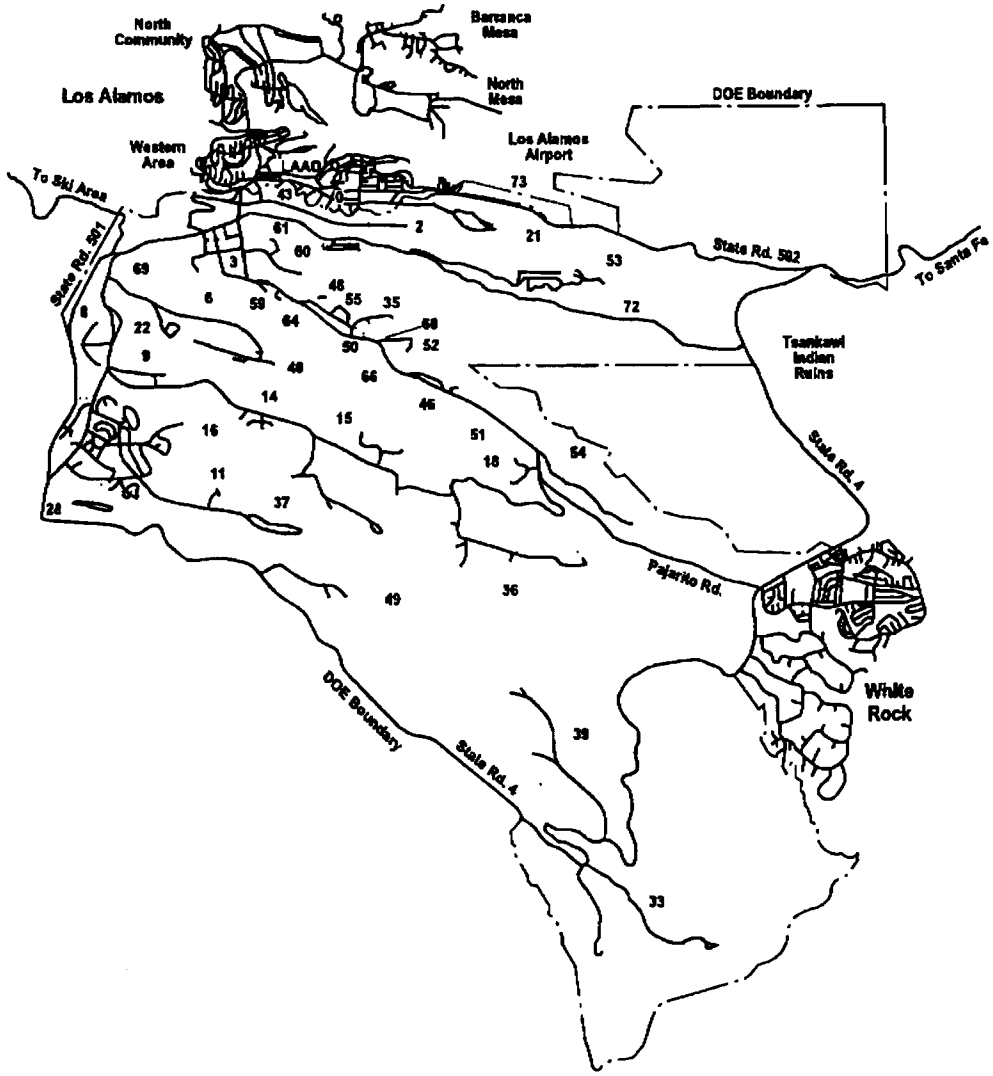

Technical Area Locations

TA-0	Unassigned Land Reserve
TA-2	Omega Site
TA-3	South Mesa Site
TA-5	Beta Site
TA-6	Two Mile Mesa Site
TA-8	Anchor Site West
TA-9	Anchor Site East
TA-11	K-Site
TA-14	Q-Site
TA-15	R-Site
TA-16	S-Site
TA-18	Pajarito Laboratory
TA-21	DP-Site
TA-22	TD-Site
TA-28	Magazine Area A
TA-33	HP-Site
TA-35	Ten Site
TA-36	Kappa Site
TA-37	Magazine Area C
TA-39	Ancho Canyon Site
TA-40	DF-Site
TA-41	W-Site
TA-43	Health Research Lab & DOE Headquarters
TA-46	WA-Site
TA-48	Radiochemistry Site
TA-49	Frijoles Mesa Site
TA-50	Waste Management Site
TA-51	Radiation Exposure Facility
TA-52	Reactor Development Site
TA-53	Meson Physics Facility
TA-54	Waste Disposal Site
TA-55	Plutonium Facility Site
TA-57	Fenton Hill Site
TA-58	Two Mile North Site
TA-59	OH-Site

MAP OF TA-55

Note: The Plutonium Facility, Building PF-4, is labeled PF-4 on this map.

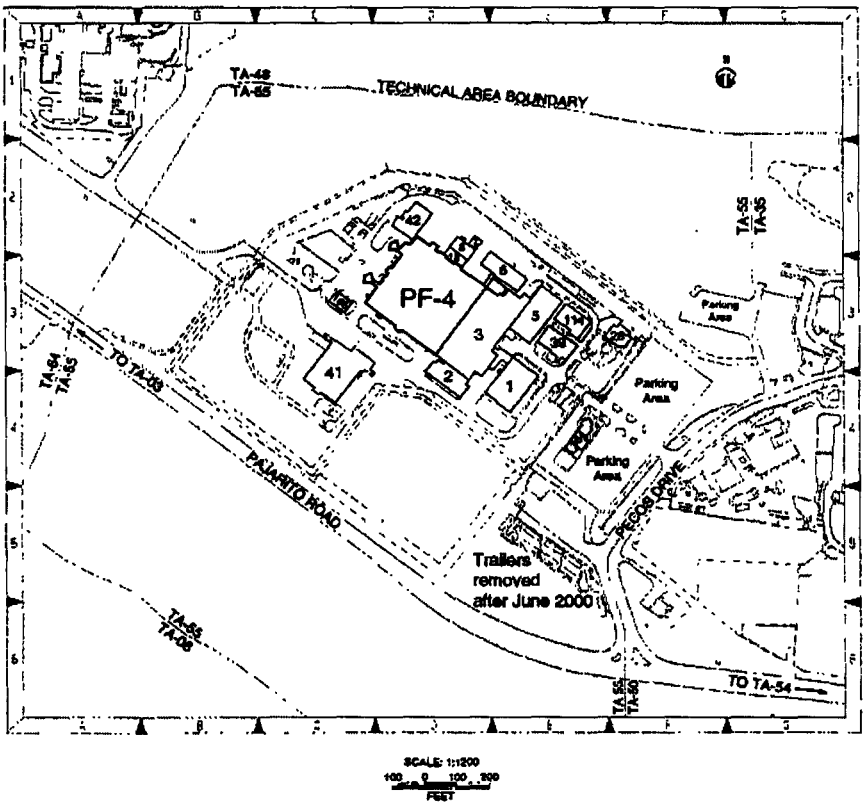

GENERALIZED PROCESS STATUS DIAGRAM FOR PU-238 PROCESSES

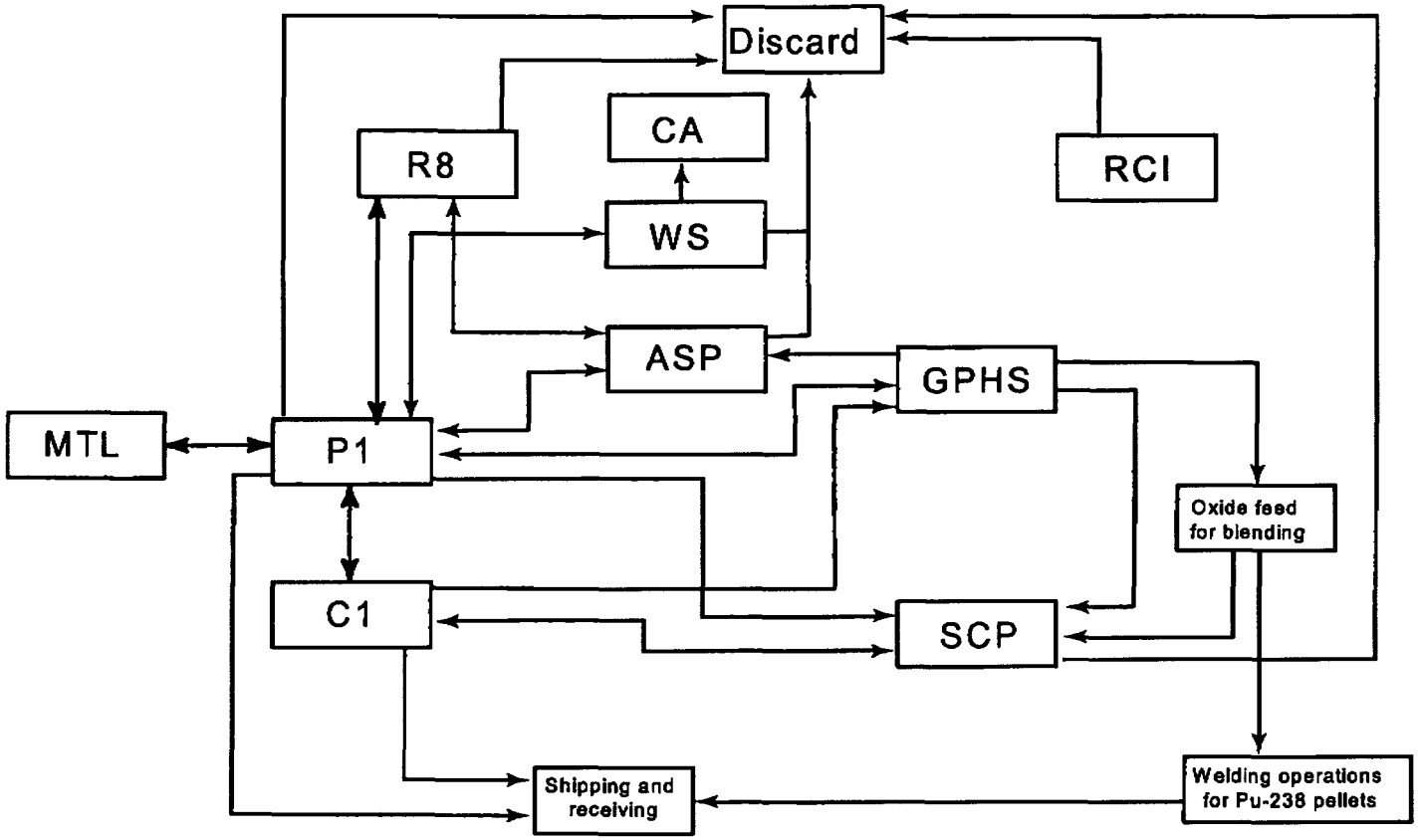

WASTE GENERATOR FORMS FOR TRU WASTE

Los Alamos NATIONAL LABORATORY

TRU WASTE STORAGE RECORD

LA00000055683

1. GENERATOR'S PRE-USE VISUAL INSPECTION

Drum Lot Code	UNM-A-A3T-2524	Inspected Items	
Year of Manufacture	1914	☑ Ring, Bolt, and Nut	☑ Chime	☑ Dents
Box Serial Number	N/A	☑ Lid and Gasket	☐ Gouges	☑ Paint
This container has been visually inspected according to approved procedures and has been found to be free of damage that would make it unsuitable for TRU waste packaging.		Printed Name	Date 1-24-95
		Signature	

2. GENERATOR'S PACKAGE INFORMATION

Group NMT-7	Technical Area TA-55	Building PF-4	Program Code RBR3000	Normal ☑ Yes ☐ No
Additional Information TID # B22206				
2-5ML Bags Folded not Taped				
Swipe Survey was NOA Lid 139 3798				

CODE	CONTAINER	INTERNAL SHIELDING	
01	☑ Steel Drum (55 gal.)	☑ None	
02	☐ Standard Waste Box	Type	Thickness (in.)
03	☐ Other (Call TWCO)		
04	☐ RH Canister		

Waste Profile Request Number	81715
Carbon Filter ID	01 LA 13 14 13 14 02
Process Batch Code	N/A
Gross Weight (lb.)	18.519 E+1
Organic Material Wt. (lb.)	10.418 E+1
Organic Material Volume (%)	10
TRUCON Code	1116A
Date Closed (MMDDYY)	011215 95

RADIONUCLIDE CONTENT

Material Type ☑ Yes ☐ No 813

Nuclide	Amount		Uncertainty		Co-Curie Mo-Gram
PU12138	3.91217	E-11	1.11618	E-11	C
PU12139	2.21719	E-12	6.71719	E-13	C
PU12140	1.11515	E-12	3.41315	E-13	C
PU12141	9.61411	E-11	2.81617	E-11	C
PU12142	9.41412	E-16	2.81018	E-16	C

NONRADIOACTIVE HAZARDOUS MATERIALS

Name	EPA Code	Quantity (g)
None		

The data in this section were collected, and the waste described herein was packaged and labeled according to approved procedures.

Printed Name | Signature | Date 1-26-95

3. GENERATOR SITE HEALTH PHYSICS INFORMATION

Gamma Dose Rate (mrem/h)	12.0 E+1	Survey Meter Model 808C	Property Number 2641	Calibration Void Date 4/31/95
Neutron Dose Rate (mrem/h)	1.0 E+1	Survey Meter Model NR-4	Property Number 5807	Calibration Void Date 4/30/95
Total Dose Rate (mrem/h)	13.0 E+1	The data in this section were collected according to approved procedures.		
Alpha Contamination (dpm/100cm²)	10.0 E+1	Printed Name	Date 02/08/95	
Beta-Gamma Cont. (dpm/100cm²)	10.0 E+1	Signature		

4. CST-7 REVIEW/AUTHORIZATION

The data package for this waste has been reviewed by CST-7. The generator is authorized to arrange transportation to TA-54 by AR 10-5.	Printed Name	Date 3/1/95
	Signature	

Form 1562 (2/94)

DISCARDABLE WASTE LOG SHEET

Effective Date 08/01/94
Page 1 of 1 Pages

LA000000556923
WASTE PACKAGE SERIAL NUMBER

N-Comb ✓ Comb ✓ Pu-238 ✓

Two Drum Liners Installed

Install/Tighten Carbon Filter(s)

Tighten Locknut or Box Plugs

TID# B22206

Date TIDed 1-25-95

NR waste ✓
Lead shielding ✓
1/8 Inch Drum Liner ✓

CONTAINER: ✓ Open ☐ In-Line

Assay Instrument Type: NEUTRON ✓ GAMMA

ITEM NO	ITEM ID	PKG WT Kg	MATRIX (MATERIAL)	HT	SNM GRAMS	UNCRT +/- GRAMS	ITEM SNM g + 2X UNCERT	SNM+2X UNCERT. running total	CERTIFIED PERSONNEL	REMARKS (Wt in kg) ORGANICS Vol	ORGANICS WT.	HAZARDOUS MATERIALS	OTHER REMARKS	AUTH. PG/LN	DATE mm/dd/yy
0	PLS-221	1.29	Plastic	83	0.44	0.03	0.50	0.50			0.78	NONE	Contains 0.51 kg	9/3	1-25-95
1	PLS-218	1.65	Plastic	83	0.25	0.04	0.33	0.83			1.14	NONE	Contains 0.51	9/3	1-25-95
2	PLS-186	1.18	Plastic	83	1.04	0.61	2.26	3.09			0.67	NONE	Contains 0.51	9/3	1-25-95
3	PLS-224	1.08	Plastic	83	0.22	0.02	0.26	3.35			0.57	NONE	Contains 0.51	9/3	1-25-95
4	PLS-202	1.83	Plastic	83	0.31	0.04	0.39	3.74			1.32	NONE	Contains 0.51	9/3	1-25-95
5	PLS-216	1.85	Plastic	83	0.31	0.02	0.35	4.09			1.34	NONE	Contains 0.51	9/3	1-25-95
6	PLS-192	1.40	Plastic	83	0.12	0.04	0.20	4.29			0.89	NONE	Contains 0.51	9/3	1-25-95
7															
8															
9															

TOTAL Pkg wt Kg X 2.2046 = Pkg wt Lbs(#)	10.28 / 22.66	NMT-2 Gross wt. Check Init.	83	2.69	0.80			TOTALS	100	6.71	Haz-Mat	None
+DRUM/BX TARE #	63.48							Organics wt (kg) x 2.2046 = wt (lbs)	14.79		NMT-4 Assay Value	2.382 +/- 0.116
= CALC GROSS #	86.14	Acntability Check Init.						QA Pkg Approval			Instrument ID	GPS
SCALE GROSS #	85.94										Date	1-30-95
											NMT-4 Sign.	

This container's waste was packaged and the NMT-2 data on the DWLS and the CHSR were collected according to procedures defined in the Los Alamos Certification Plan and the appropriate attachment(s).

NMT-2 Signature

TRUPH-TASS-DR-02, R00

Page 1 of
Effective Date: 07/12/9

518317

WASTE ORIGINATION AND DISPOSITION FORM (solid waste)

SECTION I To be completed by waste generator operator

DATE 6/8/94

ITEM ID PLS-202 MATRIX Plastic MTs 83 / Pu^{240}/U^{235}

AMOUNT OF WASTE (kg)		
gross	tare	net
1.53	0.51	1.02

ROOM NUMBER/PHONE 204 / 7-2370

EXTRA BAG STUBS # 0 #PKGS (BAGS) 1

BAG SIZES: 11LB ___ 14LB ✓ 26LB ___

HAZARDOUS/PROHIBITED MATERIALS (LIST) none

LEAD SHIELDING (DESCRIBE, kg) none

SAFE TO OPEN OUTER CAN: YES ☒ NO ☐

I certify that this item contains no free liquids, pyrophorics, explosives, compressed gases, powders or materials other than the indicated matrix, except as listed above. Current SOPs were followed in the origination of this item and I believe it will meet current approved discard limits.

Operator's name printed and signature Supervisor's name (printed) & P/S

SECTION II To be completed by NMT-2 Waste Management Inspector(s)

☐ Certified for ☐ Cement NOT ☒ Certifiable

Inspector's signature 6-28-94 Date

WM OBSERVATIONS: Hold Item Bag + Can Filtered (1.83 Kg Pkg wt)

PASSES WIRE TIE RESTRICTIONS: YES ✓ NO ___

INSPECTORS INITIALS ___ # PKGS 1

gm Pu / kg net, or # units = 0.31 / 1.02 = 0.30

EDL VALUE 5.60 UNITS g/kg

ITM MEETS EDL ☑ YES ☐ NO

Inspector Initials

Waste Package Serial Number: LA 0 0 0 0 0 0 5 5 6 8 3

SECTION III To be completed by NMT-4 NDA Lab

MEASUREMENT CODE G05

Pu(g) 0.3050 +/- 0.0446

( ) ___ +/- ___

NAME (printed)

SIGNATURE

28JUN94 DATE

COMMENTS

HEALTH-SAFETY-ENVIRONMENT FORM

LOS ALAMOS SCIENTIFIC LABORATORY

DATE

CHEMICAL WASTE DISPOSAL REQUEST

REQUESTED BY _____ PHONE _____

GROUP _____ LOCATION: TA-_____ BLDG. _____ AREA/WING _____ ROOM _____

WASTE VOLUME (ft^3) _____

NUMBER OF CONTAINERS (SIZE/TYPE) _____

WASTE FORM (check as appropriate):

☐ SOLID ☐ LIQUID ☐ GAS

COMMON NAMES OF CHEMICALS: _____

POTENTIAL HAZARDS (check as appropriate):

CORROSIVES ☐ Acids ____strong ____mild ____weak

☐ Bases ____strong ____mild ____weak

☐ FLAMMABLE ☐ TOXIC ☐ OTHER:

☐ EXPLOSIVE ☐ CARCINOGEN _____

☐ PYROPHORIC ☐ INFECTIOUS _____

☐ OIL ☐ UNKNOWN _____

CAN MATERIALS REACT VIOLENTLY WHEN EXPOSED TO:

AIR _____ WATER _____ OTHER CHEMICALS _____

If yes, give details: _____

OTHER USEFUL INFORMATION: _____

(TO BE COMPLETED BY H-7)

DISPOSAL RECORD

AREA _____ PIT/SHAFT _____ DATE _____ BY _____

MAIL THIS FORM TO WASTE MANAGEMENT, H-7, MS-~~[illegible]~~ [illegible]

6/80 H&S 7-5A

TWCP/WRR
Document Modification/Review Cycle

☐ Revision
☒ Interim Change

Document ID: TWCP-AK-2.1-011,R.0/IC1 New Rev/IC: R0/IC1

Preparer: John Musgrave

Document Title:
Acceptable Knowledge Summary Report for Waste Streams TA-55-43, TA-55-44, TA-55-45, TA-55-46 and TA-55-47

Blank entries are Not Applicable items.

- ☒ Procedure number verified
- ☒ Procedure Title verified
- ☒ Procedure Revision/IC verified
- ☒ Pagination verified
- ☒ Document Header verified
- ☒ Attachment Header verified
- ☒ Hazard Summary verified (if applicable)
- ☒ Effective/Review Date/LAUR# on cover page
- ☐ Copy of final to Training/Signature Copies
- ☒ Signatures and Dates typed on cover page
- ☒ Revision History table reflect changes and effective date
- ☒ Forms have been marked as SAMPLE
- ☒ Forms extracted for Web publishing
- ☒ Electronic files archived
- ☒ Diskette Prepared for Document Control
- ☒ Document Control packet contains signed original, diskette, DRR/Redline, review documentation

Document Tracking Closed ○ Open ● Closed Date to DC: 11/5/2001 Signed Initials: [illegible]

Date Received: 11/6/01

- ☑ Verify Signatures
- ☑ Verify Effective Date cover/history
- ☑ Verify IC added to document (if applicable)
- ☑ Log into Database/Make Assignment
- ☑ Print Receipts/Cover sheets
- ☑ Copy document: 2
- ☑ Control Stations Updated - Date: 11/5/01
- ☑ Master Index Updated - Date: 11/5/01
- N/A Archive old revision (Record)

- ☑ Capture Document: ✓ Word __ PDF
- ☑ Forms: __ Yes ✓ No
- ☑ Transfer to Web Server
- ☑ Quality check to Original
- ☑ Verify Signatures ✓ Signature Dates ✓
- ☑ Dates: ✓ Cover ✓ Rev. History ✓ Review Date
- N/A Add: Controlled Document Original Signatures on File at the RMDC
- ☑ Security Set for: ____ Read Only
- ☑ Web Page TOC: ✓ No/Rev ✓ Effective Date ✓ LAUR ✓ Title ✓ Link ✓ Test
- ☑ On-line test: ✓ Open Doc N/A Password
- ☑ Electronic Notification: ✓ Sent ✓ Printed
- N/A CAO: __ Electronic Copy __ Printed

11/5/01

If pages are separated match to Document: TWCP-AK-2.1-011,R.0/IC1

TWCP/WRR
Document Modification/Review Cycle

Status: ○ Open ● Closed ☐ Revision ☒ Interim Change

Date Received: 11/1/2001

Current Rev/IC: R0

Document ID: TWCP-AK-2.1-011,R.0/IC1

Rev/IC: R0/IC1

Document Title:

Acceptable Knowledge Summary Report for Waste Streams TA-55-43, TA-55-44, TA-55-45, TA-55-46 and TA-55-47

Preparer: John Musgrave

Date to DP Team: 11/5/2001

Technical Reviewer: (QA and Preparer)

Release for Review:

Comments:

☒ IC - Not Applicable

Reviewer	Name	Sent Out	Returned	Comments

Comments:

TWCP/WRR
Document Modification/Review Cycle

☒ IC - Not Applicable

Reviewer Comments Incorporated: .....

Redline/DRR Given to Preparer: .....

Reconciled Comments Returned: .....

Modifications Made to Document:

Preparer Review of Modifications: .....

Signed/Release for Final Signature:

Comments:

☒ IC - Not Applicable

Signature	Position	Sent Out	Returned	Comments

Comments:

Organization	Contact	Sent Out	Returned	Comments

Comments

To: rubyannf@lanl.gov, mlgarcia@lanl.gov
From: Patricia G Patton <pgp@lanl.gov>
Subject: For Training Distribution
Cc: fabi@lanl.gov
Bcc:
Attached:

The following is a revised report.

Effective Date: 115/01

TWCP-AK-2.1-011,R.0/IC1 - Acceptable Knowledge Summary Report for Waste Streams TA-55-43, TA-55-44, TA-55-45, TA-55-46, TA-55-47 (LA-UR-01-4964)

~~~~**~~**~~**~~**~~**~~**~~**~~**~~**~~**~~**~~**

Patricia G. Patton

Los Alamos National Laboratory
E-ET
Records Management / Document Control
(RMDC)
TA-0
557 Oppenheimer Building 764
Phone: (505) 667-2071
Email: pgp@lanl.gov

~~~~**~~**~~**~~**~~**~~**~~**~~**~~**~~**~~**~~**~~**

LOS ALAMOS
NATIONAL LABORATORY - TWCP RMDC

Controlled Document Acknowledgment

Failure to return receipt by response date may result in removal from Distribution and/or placement on Supervised Work Activities for reciepients who are overseeing or performing work to this document.

Please Sign, Fold, and Return this Form

To: TWCP RMDC **Mail Stop: M 319** **Please Respond 11/20/2001** ____

TWCP-AK-2.1-011,R.0/IC1

Effective Date 11-5-2001 **Doc_Source** TWCP **Doc_Status** FINAL **Entry No**

Document Title Acceptable Knowledge Summary Report for Waste Streams TA-55-43, TA-55-44, TA-55-45, TA-55-46, TA-55-47 (LA-UR-01-4964)

Document Comments

Work Stations	ID_No	Name	MS	Organization	Copy
☒ RMDC ✓	N/A	?	?	?	
☐ WCRRF					
☐ RAMROD					
☐ RANT					
☐ DECON ✓					
☒ QA					

Action Required:

Please sign receipt and return to **RMDC, M 319**. My Signature on this Form verifies that I have Received this Document.

____ Please remove me from the Controlled Distribution List. Since the contents of this document does not apply to our operation the document is being returned. (Not applicable for Controlled Stations)

To be signed by the Controlled Document Recipient or their designee.

Signature: _____ Date: 11/5/01

AK-2.1-011, R0/IC1

X-Sender: 092080@eet-mail.lanl.gov
X-Mailer: QUALCOMM Windows Eudora Version 5.0.1
Date: Tue, 22 Jan 2002 09:59:28 -0700
To: Shannan Baker <shannan@lanl.gov>, pgp@lanl.gov
From: marji gavett <gavett@lanl.gov>
Subject: Re: Fwd: Re: TWCP-PLAN-0.2.7-001,R.5
Cc: pzr@lanl.gov, souza@lanl.gov, lindahl@lanl.gov
X-RCPT-TO: <114654@eet-mail.lanl.gov>

Thank you Shannan.

At 09:41 AM 1/22/02 -0700, Shannan Baker wrote:

> In speaking with S-7, Dan Gerth, he said that we should get new LAUR numbers even though it is an IC, it is still a change to the document. Anything that may go outside the Lab, even though minor editorial changes have been made, a new number is required.
>
> Thanks,
> Shannan

At 08:00 AM 1/22/2002 -0700, marji gavett wrote:

> I agree; however, it might be worth following up with classification....
>
> At 08:45 AM 1/18/02 -0700, Shannan Baker wrote:
>
> > Marji & Patricia,
> >
> > I think that we should get an LAUR number on this, just to cover all bases. It only takes a few days to get something through classification. However, this is just my opinion...
> >
> > Shannan
> >
> > > X-Sender: 084120@eet-mail.lanl.gov
> > > X-Mailer: QUALCOMM Windows Eudora Version 5.0
> > > Date: Thu, 17 Jan 2002 16:42:44 -0700
> > > To: Patricia G Patton <pgp@lanl.gov>
> > > From: "Pamela Z. Rogers" <pzr@lanl.gov>
> > > Subject: Re: TWCP-PLAN-0.2.7-001,R.5
> > > Cc: gavett@lanl.gov, shannan Baker <shannan@lanl.gov>
> > > X-RCPT-TO: <115883@eet-mail.lanl.gov>
> > >
> > > Pat - I reviewed IC1 to AK-2.1-011, R0 and found that it consists only of references added to the report. Since the body of the references is not classified or UCNI, the titles can not be. Therefore I see little value added in having this small change force the report through reclassification.
> > >
> > > However, I'm not the final word on this. I'm copying Marji and Shannan in case they have gotten further updates or clarification on this issue. If not, we should probably call S division and ask about this kind of situation.
> > >
> > > Thanks for checking!

TWCP/WRR
Document Modification/Review Cycle

☐ Revision
☐ Interim Change

Document ID: TWCP-AK-2.1-011 New Rev/IC: 0

Preparer: John Musgrave

Document Title:
Acceptable Knowledge Summary Report for Waste Streams TA-55-43, TA-55-44, TA-55-45, TA-55-46, TA-55-47

Blank entries are Not Applicable items.

- ☒ Procedure number verified
- ☒ Procedure Title verified
- ☒ Procedure Revision/IC verified
- ☒ Pagination verified
- ☒ Document Header verified
- ☒ Attachment Header verified
- ☐ Hazard Summary verified (if applicable)
- ☒ Effective/Review Date/LAUR# on cover page
- ☐ Copy of final to Training/Signature Copies
- ☒ Signatures and Dates typed on cover page
- ☒ Revision History table reflect changes and effective date
- ☐ Forms have been marked as SAMPLE
- ☐ Forms extracted for Web publishing
- ☒ Electronic files archived
- ☒ Diskette Prepared for Document Control
- ☒ Document Control packet contains signed original, diskette, DRR/Redline, review documentation

Document Tracking Closed ○ Open ● Closed Date to DC: 9/19/2001 Signed Initials: [illegible]

Date Received: 9/20/01

- ☑ Verify Signatures
- ☑ Verify Effective Date cover/history
- ☑ Verify IC added to document (if applicable)
- ☑ Log into Database/Make Assignment
- ☑ Print Receipts/Cover sheets
- ☑ Copy document: 2
- ☑ Control Stations Updated - Date: 9/20/01
- ☑ Master Index Updated - Date: 9/20/01
- N/A Archive old revision (Record)

- ☑ Capture Document: __ Word ✓ PDF
- ☑ Forms: __ Yes ✓ No
- ☑ Transfer to Web Server
- ☑ Quality check to Original
- ☑ Verify Signatures ✓ Signature Dates ✓
- ☐ Dates: ✓ Cover ✓ Rev. History ✓ Review Date
- N/A Add: Controlled Document Original Signatures on File at the RMDC
- N/A Security Set for: ____ Read Only
- ☑ Web Page TOC: __ No/Rev ✓ Effective Date 9/20/01 ✓ N/A LAUR ✓ Title ✓ Link __ Test
- ☑ On-line test: ✓ Open Doc N/A Password
- ☑ Electronic Notification: ✓ Sent ✓ Printed
- N/A CAO: __ Electronic Copy __ Printed

Date Completed: 9/20/01 Signature/Date: [illegible]

If pages are separated match to Document: TWCP-AK-2.1-011

TWCP/WRR
Document Modification/Review Cycle

Status: ○ Open ◉ Closed ☐ Revision ☐ Interim Change

Date Received: 9/19/2001

Current Rev/IC: -

Document ID: TWCP-AK-2.1-011

Rev/IC: 0

Document Title:

Acceptable Knowledge Summary Report for Waste Streams TA-55-43, TA-55-44, TA-55-45, TA-55-46, TA-55-47

Preparer: John Musgrave

Date to DP Team: 9/19/2001

Technical Reviewer: (QA and Preparer)

Release for Review:

Comments:

Work was done over a period of several months.

☐ IC - Not Applicable

Reviewer	Name	Sent Out	Returned	Comments

Comments:

If pages are separated match to Document: TWCP-AK-2.1-011

TWCP/WRR
Document Modification/Review Cycle

☐ IC - Not Applicable

Reviewer Comments Incorporated: .....
Redline/DRR Given to Preparer: .....
Reconciled Comments Returned:
Modifications Made to Document: .....
Preparer Review of Modifications: .....
Signed/Release for Final Signature: .....

Comments:

☐ IC - Not Applicable

Signature	Position	Sent Out	Returned	Comments
J. Musgrave	Technical	9/4/2001	9/4/2001	Document Preparer
J. Fabryka-Martin	Technical	9/4/2001	9/4/2001	Independent Technical Reviewer/Editor
P. Rogers	SPM	9/17/2001	9/17/2001	Site Project Manager
M. Gavett	QA	9/17/2001	9/18/2001	Site Project QA Officer
A. Montoya	Fac Mgr	9/4/2001	9/14/2001	Facility Representative

Comments:

Organization	Contact	Sent Out	Returned	Comments
Classification		9/14/2001	9/19/2001	LA-UR-01-4964

Comments

To: rubyannf@lanl.gov, mlgarcia@lanl.gov
From: Patricia G Patton <pgp@lanl.gov>
Subject: For Training Distribution
Cc: fabi@lanl.gov
Bcc:
Attached:

The following is a revised procedure.

Effective Date: 9/20/01

TWCP-AK-2.1-011,R.0 - Acceptable Knowledge Summary Report for Waste Streams TA-55-43, TA-55-44, TA-55-45, TA-55-46, TA-55-47 (LA-UR-01-4964)

~~~~**~~**~~**~~**~~**~~**~~**~~**~~**~~**~~**~~**

Patricia G. Patton

Los Alamos National Laboratory
E-ET
Records Management / Document Control
(RMDC)
TA-0
557 Oppenheimer Building 764
Phone: (505) 667-2071
Email: pgp@lanl.gov

~~~~**~~**~~**~~**~~**~~**~~**~~**~~**~~**~~**~~**~~**

LOS ALAMOS
NATIONAL LABORATORY - TWCP RMDC

Controlled Document Acknowledgment

Failure to return receipt by response date may result in removal from Distribution and/or placement on Supervised Work Activities for reciepients who are overseeing or performing work to this document.

Please Sign, Fold, and Return this Form

To: TWCP RMDC **Mail Stop: M 319** **Please Respond 10/4/2001**

TWCP-AK-2.1-011,R.0

Effective Date 9-20-2001 **Doc_Source** TWCP **Doc_Status** FINAL **Entry No**

Document Title Acceptable Knowledge Summary Report for Waste Streams TA-55-43, TA-55-44, TA-55-45, TA-55-46, TA-55-47

Document Comments

Work Stations	ID_No	Name	MS	Organization	Copy
☒ RMDC	N/A	?	?	?	
☐ WCRRF					
☐ RAMROD					
☐ RANT					
☐ DECON					
☒ QA					

Action Required:

Please sign receipt and return to **RMDC, M 319.** My Signature on this Form verifies that I have Received this Document.

___ Please remove me from the Controlled Distribution List. Since the contents of this document does not apply to our operation the document is being returned. (Not applicable for Controlled Stations)

To be signed by the Controlled Document Recipient or their designee.

Signature: _____ Date: 9/20/01

Los Alamos
NATIONAL LABORATORY

TRU WASTE STORAGE RECORD

LA00000056636

1. GENERATOR'S PRE-USE VISUAL INSPECTION

Purchase Order #	Inspected Items		
This container has been visually inspected according to approved procedures and has been found to be free of damage that would make it unsuitable for TRU waste packaging.	☒ Ring, Bolt, and Nut	☒ Chime	☒ Dents
	☒ Lid and Gasket	☒ Gouges	☒ Paint
Name TRUJILLO MICHAEL C	Znumber 096605	Date JUL 30 1997	

2. GENERATOR'S PACKAGE INFORMATION

Group NMT-7	Technical Area 55	Building PF-4	Program Code 8J0700 KF14 1000 0000	☐ Off-Normal
Additional Information TID 826672				

CONTAINER	LINER
☒ Steel Drum (55 gal.)	☒ None
☐ Steel Drum (85 gal.)	☐ 50 mil liner
☐ Standard Waste Box	☐ 125 mil liner
☐ RH Canister	INTERNAL SHIELDING
☐ Other (Cell TWCO)	☒ None
☐ Overpack	Type / Thickness (in.)
Carbon Filter ID 01 1576 / 02	

RADIONUCLIDE CONTENT			
Nuclide	Amount	Uncertainty	C = Curie M = Gram
PU-238	6.007E-3	5.138E-4	M
PU-239	5.633E+1	4.816E+0	M
PU-240	3.604E+0	3.082E-1	M
PU-241	1.201E-1	1.027E-2	M
PU-242	1.201E-2	1.027E-3	M
AM-241	9.551E-2	8.166E-3	M

Waste Profile Request Number	20309
Process Batch Code	NA ☐ PDP Program Tracking No:
Gross Weight (lb.)	1.12E+2
Net Weight (lb.)	4.88E+1
Shipping Category	3003400280
LANL Waste Stream ID	TA-55-3
TRUCON Code	118C
Date Closed (MMDDYY)	AUG 4 1997

NONRADIOACTIVE HAZARDOUS MATERIALS		
Name	EPA Code	Quantity (g)
None		

Obliterate names

Accumulation Start Date (MMDDYY)

The data in this section were collected, and the waste described herein was packaged and labeled according to approved procedures.

Name VIGIL ROBERT A | Znumber 091594 | Date AUG 11 1997

3. GENERATOR SITE HEALTH PHYSICS INFORMATION

Gamma Dose Rate (mrem/h) (contact)	8.0E+1	Survey Date AUG 6 1997	Survey Meter RO20	Property Number 006487	Calibration Due Date SEP 13 1997
Neutron Dose Rate (mrem/h) (contact)	1.3E+0	Survey Date AUG 6 1997	Survey Meter PNR-4	Property Number 004906	Calibration Due Date OCT 2 1997
Total Dose Rate (mrem/h) (contact)	8.1E+1				
Total Dose Rate (mrem/h) (1 meter)	8.8E+0	*The data in this section were collected according to approved procedures.*			
Alpha Contamination (dpm/100cm^2) (max)	0.0E+0	Name CHAVEZ RONALD			
Beta-Gamma Cont. (dpm/100cm^2) (max)	0.0E+0	Znumber 112026		Date AUG 11 1997	

Modifications to Computer Generated Data Invalidate this Form

replace w/ LA 000000 55683

Los Alamos
NATIONAL LABORATORY

DISCARDABLE WASTE LOG SHEET

LA00000056636

Item ID	Matrix	Pkg Wt (lbs)	Qty	Volume (l)	MT	SNM(g)	Uncert(g)	Pu/Section/Ln OR Memo
COMCXL5	Combustibles	8.03			52	8.831	0.134	8/4
PLSBD3	Plastic	6.02			52	10.215	1.055	8/17
PLSSC28	Plastic	11.06			52	49.824	5.025	8/17

Total Pkg Wt (lbs)	48.72
Drum Tare (lbs)	62.76
Calc Gross Wt (lbs)	111.48
Meas Gross Wt (lbs)	111.68

MT	Total SNM	Total Uncert
52	68.870	6.214

Printed AUG 28 97 11:36:46 by BUSTAMANTE J M

TRU Waste Origination & Disposition Information

Items: COMCXL5	Source: Combustibles				Date: JUL 30 1997
Quantity:	Gross Wt (lbs): 5.72	Tare Wt:	Net Wt (lbs): 5.72	Volume (ft):	Process Status: CXL
Generator: ORTEGA JOSE D			Facility: 108039	Room: 420	Phone: 7-2575
Waste Process: Solid Waste Processing		Assay: NDA Laboratory	Container Info:		Drum#: LA00000056636

Beryllium	NO	Explosives	NO	PCB's	
Compressed Gases	NO	Free Liquids	NO	Particulates	NO
Corrosive	NO	Hazardous		Pyrophorics	NO

Comments:
Trash from hot job.

Assay Information

Isotope	MT	SNM (g)	Uncert (g)	Mcode	Limit	SNM (g)/unit	Date	By
PU-239	52	0.031	0.134	G05.	4.30	0.010	JUL 31 1997	GUTIERREZ DARLENE D

Justification Memos

Memo ID
NONE

Hazardous Materials

EPA Code	Material	Wt (g)
NONE		

History

Date	Name	Event	Comments
JUL 30 1997	CHAVEZ RONALD G	CERTIFIED	
AUG 4 1997	VIGIL ROBERT A	PACKED	LA00000056636

Printed AUG 28 97 11:38:44 by BUSTAMANTE J M

TRU Waste Origination & Disposition Information

PLSED3	Plastic			JUL 30 1997
3.18		3.18		ED
ROMERO JOE C		109702	401	7-2572
Solid Waste Processing	NDA Laboratory			LA00000056636

Beryllium	NO	Explosives	NO	PCB's	
Compressed Gases	NO	Free Liquids	NO	Particulates	NO
Corrosive	NO	Hazardous		Pyrophorics	NO

PLASTICS FOR DISCARD

Assay Information

Isotope	MT	SNM (g)	Uncert (g)	Mcode	Limit	SNM (g)/unit	Date	By
PU-239	52	10.215	1.053	G05	16.00	3.210	JUL 31 1997	GUTIERREZ DARLENE D

Justification Memos

Memo ID
NONE

Hazardous Materials

EPA Code	Material	Wt (g)
NONE		

History

Date	Name	Event	Comments
JUL 30 1997	CHAVEZ RONALD G	CERTIFIED	
AUG 4 1997	VIGIL ROBERT A	PACKED	LA00000056636

Printed AUG 28 97 11:38:44 by BUSTAMANTE J M

TRU Waste Origination & Disposition Information

Item	Matrix			Date
PLSSC28	Plastic			JUL 30 1997
Quantity / Gross Wt (kg)	Tare Wt	Net Wt (kg)	Volume (l)	Physical State
8.70		8.70		SC

Generator		Zipcode	Room	Phone
LUJAN JOE E		083188	420	7-2575

Waste Process	Assay	Checklist Info	Drum Id
Solid Waste Processing	NDA Laboratory		LA00000056636

Beryllium	NO	Explosives	NO	PCB's	
Compressed Gases	NO	Free Liquids	NO	Particulates	NO
Corrosive	NO	Hazardous		Pyrophorics	NO

Comments

Assay Information

Isotope	MT	SNM (g)	Uncert (g)	Mcode	Limit	SNM (g)/unit	Date	By
PU-239	52	49.824	5.025	G05	16.00	5.730	JUL 31 1997	GUTIERREZ DARLENE D

Justification Memos

Memo ID
NONE

Hazardous Materials

EPA Code	Material	Wt (g)
NONE		

History

Date	Name	Event	Comments
JUL 3 1997	CHAVEZ RONALD G	CERTIFIED	
AUG 4 1997	VIGIL ROBERT A	PACKED	LA00000056636

Printed AUG 29 97 11:38:45 by BUSTAMANTE J M

Los Alamos
NATIONAL LABORATORY

TRU WASTE STORAGE RECORD

LA00000055683

1. GENERATOR'S PRE-USE VISUAL INSPECTION

Drum Lot Code	UN IA IA T-25-94	Inspected Items	
Year of Manufacture	1914	☑ Ring, Bolt, and Nut	☑ Chime	☑ Dents
Box Serial Number	NIA	☑ Lid and Gasket	☐ Gouges	☑ Paint
This container has been visually inspected according to approved procedures and has been found to be free of damage that would make it unsuitable for TRU waste packaging.	Printed Name	Date 1-24-95	
	Signature		

2. GENERATOR'S PACKAGE INFORMATION

Group NMT-7	Technical Area TA-55	Building PF-4	Program Code KB R3000	Normal ☑ Yes ☐ No
Additional Information TID # B22206				
2-SML Bags Folded not taped				
Swipe Survey was NOA Lnd 139 3798				

CODE	CONTAINER	INTERNAL SHIELDING	
01	☑ Steel Drum (55 gal.)	☑ None	
02	☐ Standard Waste Box	Type	Thickness (in.)
03	☐ Other (Call TWCO)		. E + -
04	☐ RH Canister		. E + -

Waste Profile Request Number	8715
Carbon Filter ID 01 LA 13 14 13 14	02
Process Batch Code	NIA
Gross Weight (lb.)	8.519 E +1
Organic Material Wt. (lb.)	1.418 E +1
Organic Material Volume (%)	1010
TRUCON Code	1116A
Date Closed (MMDDYY)	011215

RADIONUCLIDE CONTENT

Material Type ☒ Yes ☐ No 83

Nuclide	Amount		Uncertainty		C=Curie M=Gram
PU2318	3.9217	E +11	1.1618	E +11	C
PU2259	2.2179	E +12	6.7179	E +13	C
PU2410	1.1515	E +12	3.4135	E +13	C
PU2411	9.6411	E +11	2.8617	E +11	C
PU2412	9.4412	E +16	2.8108	E +16	C
	.	E + -	.	E + -	
	.	E + -	.	E + -	
	.	E + -	.	E + -	

NONRADIOACTIVE HAZARDOUS MATERIALS

Name	EPA Code	Quantity (g)
None		. E + -
		. E + -
		. E + -
		. E + -

The data in this section were collected, and the waste described herein was packaged and labeled according to approved procedures.

Printed Name	Signature	Date 1-26-95

3. GENERATOR SITE HEALTH PHYSICS INFORMATION

Gamma Dose Rate (mrem/h)	12.0 E +1	Survey Meter Model R03C	Property Number 2641	Calibration Void Date 4/31/95
Neutron Dose Rate (mrem/h)	11.0 E +1	Survey Meter Model PNR-4	Property Number 5207	Calibration Void Date 4/30/95
Total Dose Rate (mrem/h)	13.0 E +1	*The data in this section were collected according to approved procedures.*		
Alpha Contamination (dpm/100cm²)	10.0 E +1	Printed Name	Date 02/08/95	
Beta-Gamma Cont. (dpm/100cm²)	10.0 E +1	Signature		

4. CST-7 REVIEW/AUTHORIZATION

The data package for this waste has been reviewed by CST-7. The generator is authorized to arrange transportation to TA-54 by AR 10-5.	Printed Name	Date 3/1/95
	Signature	

DISCARDABLE WASTE LOG SHEET

Effective Date 08/01/94

Page 1 of 1 Pages

LA000000055683

WASTE PACKAGE SERIAL NUMBER

N-Comb ☐ Comb ☑ Pu-238 ☑

Two Drum Liners Installed ☐

Install/Tighten Carbon Filter(s) ☐

Tighten Locknut or Box Plugs ☐

Assay Instrument Type: NEUTRON ☐ GAMMA ☑

RH waste ☐

Lead shielding ☐

1/8 Inch Drum Liner ☐

CONTAINER: Open ☑ In-Line ☐

TID# B22206

Date TIDed 1-25-95

ITEM NO	ITEM ID	PKG WT Kg	MATRIX (MATERIAL)	MT	SNM GRAMS	UNCRT +/- GRAMS	ITEM SNM g + 2X UNCERT	SNMg+2x UNCERT. running total	CERTIFIED PERSONNEL	REMARKS (Wt in kg) ORGANICS V%	ORGANICS WT.	HAZARDOUS MATERIALS	OTHER REMARKS	AUTH. PG/LN	DATE mm/dd/YY
0	PLS-221	1.29	Plastic	83	0.44	0.03	0.50	0.50			0.78	NONE	Can tare 0.51 kg	9/3	1-25-95
1	PLS-218	1.65	Plastic	83	0.25	0.04	0.33	0.83			1.14	NONE	Can Tare 0.51	9/3	1-25-95
2	PLS-186	1.18	Plastic	83	1.04	0.61	2.26	3.09			0.67	NONE	Can tare 0.51	9/3	1-25-95
3	PLS-224	1.08	Plastic	83	0.22	0.02	0.26	3.35			0.57	NONE	Can tare 0.51	9/3	1-25-95
4	PLS-202	1.83	Plastic	83	0.31	0.04	0.39	3.74			1.32	NONE	Can tare 0.51	9/3	1-25-95
5	PLS-216	1.85	Plastic	83	0.31	0.02	0.35	4.09			1.34	NONE	Can tare 0.51	9/3	1-25-95
6	PLS-192	1.40	Plastic	83	0.12	0.04	0.20	4.29			0.89	NONE	Can tare 0.51	9/3	1-25-95
7															
8															
9															

TOTAL Pkg wt Kg X 2.2046	10.28	NMT-2 Gross wt. Check Initials	83	2.69	0.80			TOTALS	100	6.71	Haz-Mat: NONE
= Pkg wt Lbs(#)	22.66							Organics wt (kg) x 2.2046 = wt (lbs)	14.79		NMT-4 Assay Value 2.382 +/- 0.116
+DRUM/BX TARE #	63.48										Instrument ID G-05 Pass
= CALC GROSS #	86.14	Acntability Check Init.						QA Pkg Approval			Date 1-30-95 2/24/95
SCALE GROSS #	85.94							M.G. May 2-24-95			NMT-4 Sign.

This container's waste was packaged and the NMT-2 data on the DWLS and the CWSR were collected according to procedures defined in the Los Alamos Certification Plan and the appropriate attachment(s).

NMT-2 Signature

518317

WASTE ORIGINATION AND DISPOSITION FORM (solid waste)

SECTION I To be completed by waste generator operator

DATE 6/8/94

ITEM ID PLS-202 MATRIX Plastic MTs 83 / Pu240/U235

ROOM NUMBER/PHONE 204 / 7-2370

AMOUNT OF WASTE (kg)		
gross	tare	net
1.53	0.51	1.02

EXTRA BAG STUBS # 0 #PKGS(BAGS) 1

BAG SIZES: 11LB ____ 14LB ____ 26LB ____

HAZARDOUS/PROHIBITED MATERIALS (LIST) None

LEAD SHIELDING (DESCRIBE,kg) None

SAFE TO OPEN OUTER CAN: YES [✓] NO [ ]

I certify that this item contains no free liquids, pyrophorics, explosives, compressed gases, powders or materials other than the indicated matrix, except as listed above. Current SOPs were followed in the origination of this item and I believe it will meet current approved discard limits.

Operator's name printed and signature Supervisor's name(printed) & P/S

SECTION II To be completed by NMT-2 Waste Management Inspector(s)

[ ] Certified for [ ] Cement NOT [✓] Certifiable

Inspector's signature 6-28-94 Date

WM OBSERVATIONS: Hold Item Bag & Can Filtered (1.83 Kg Pkg wt)

PASSES WIRE TIE RESTRICTIONS: YES ✓ NO ____

INSPECTORS INITIALS ____ # PKGS 1

gm Pu / kg net, or # units = 0.31 / 1.02 = 0.30

EDL VALUE 5.60 UNITS g/kg

ITM MEETS EDL [✓] YES [ ] NO

Inspector initials

Waste Package Serial Number: LA 0 0 0 0 0 0 5 5 6 8 3

SECTION III To be completed by NMT-4 NDA Lab

MEASUREMENT CODE G05

NAME (printed)

Pu(g) 0.3050 +/- 0.0446

( ) ____ +/- ____

SIGNATURE

28JUN94 DATE

COMMENTS

HEALTH-SAFETY-ENVIRONMENT FORM

LOS ALAMOS SCIENTIFIC LABORATORY

DATE

CHEMICAL WASTE DISPOSAL REQUEST

REQUESTED BY _____ PHONE _____

GROUP _____ LOCATION: TA-_____ BLDG. _____ AREA/WING _____ ROOM _____

WASTE VOLUME (ft^3) _____

NUMBER OF CONTAINERS (SIZE/TYPE) _____

WASTE FORM (check as appropriate):

☐ SOLID ☐ LIQUID ☐ GAS

COMMON NAMES OF CHEMICALS: _____

POTENTIAL HAZARDS (check as appropriate):

CORROSIVES ☐ Acids ____strong ____mild ____weak
☐ Bases ____strong ____mild ____weak

☐ FLAMMABLE ☐ TOXIC ☐ OTHER:
☐ EXPLOSIVE ☐ CARCINOGEN _____
☐ PYROPHORIC ☐ INFECTIOUS _____
☐ OIL ☐ UNKNOWN _____

CAN MATERIALS REACT VIOLENTLY WHEN EXPOSED TO:

AIR _____ WATER _____ OTHER CHEMICALS _____

If yes, give details: _____

OTHER USEFUL INFORMATION: _____

(TO BE COMPLETED BY H-7)

DISPOSAL RECORD

AREA _____ PIT/SHAFT _____ DATE _____ BY _____

MAIL THIS FORM TO WASTE MANAGEMENT, H-7, ~~MS-[illegible]~~ [illegible]

6/80 HS&E 7-SA

QP-00-004,R.0
Effective Date: 06/18/03

TWCP-15414

RECORDS SUBMITTAL

INSTRUCTIONS: This form is prepared by the record source when submitting individual records, batch data reports, or a records package to the RMDC Center. For records packages, a Table of Contents (TOC) must also be submitted. Each record submitted requires a complete form.

MANDATORY: X To the best of my knowledge, the record(s) have no radioactive contamination.

Signature: _____

RECORD TYPE:

X Project 2010 ☐ Facility (RRES)

☐ Other: _____ ☐ UCNI ☐ Proprietary

RECORD SOURCE:

Submittal Date: 7/25/03 Z No.: 109592 Name/Org: PATRICIA PATTON – RRES-CE

Originator: JOHN MUSGRAVE Organization: NMT

TYPE OF RECORD/ACTION TO BE TAKEN

X Individual Record ☐ Batch Data Report ☐ Records Package (+ TOC)

X New ☐ Revision* ☐ Addition* ☐ Supersedes*

*Record Barcode Number: _____ *Review Cycle (if applicable): ☐ Yes ☐ No ☐ NA

RECORD ID NUMBER: (e.g., memo symbol number, procedure (include revision), deficiency number, batch data report number, unique record identifier if applicable):
TWCP-AK-2.1-005, R.2

Record Date: 5/17/01 Physical Page Count: 180 X Single Sided ☐ Double Sided

Category Number: (from page two): 07

RECORD TITLE, SUBJECT, AND/OR KEYWORDS:
TWCP-AK-2.1-005, R.2/IC1 Process AK Report for Nitrate Operations at TA-55 (INCLUDES INTERIM CHANGE 1) - LA-UR-01-2555 – LA-UR-02-1715

RECORD CENTER USE ONLY

☑ Accepted Date: 7-25-03 ☐ Return Date: _____

Signature: _____ Resubmitted: _____

RIDs Type: LT

Scan Date: _____ By: _____ QC Date: _____ By: _____

X-Sender: chsmith@norris-mail.lanl.gov
X-Mailer: QUALCOMM Windows Eudora Version 5.1
Date: Thu, 24 Jul 2003 10:37:16 -0600
To: pgp@lanl.gov
From: Cathy Smith <chsmith@lanl.gov>
Subject: Please retire Process AK Reports
Cc: sgw@lanl.gov
X-Scanned-By: MIMEDefang 2.35

Hi Patsy,

As we discussed yesterday, here is the list of Process AK Reports that we would like to retire as controlled documents and submit as records to RMDC. Could you let Betty Humphrey and myself know when you have the record IDs - we need to update the references in the main AKIS document.

Thanks a million!

Cheers, Cathy

The following can be turned into Records, to be referenced in our AKIS or AK Summaries...

1. TWCP-AK-2.1-002, R.2/IC1 Process AK Report for Chloride Operations at TA-55

2. TWCP-AK-2.1-003, R.2/IC1 Process AK Report for Metal Operations Processes at TA-55

3. TWCP-AK-2.1-004, R.2/IC2 Process AK Report for Miscellaneous Operations at TA-55

4. TWCP-AK-2.1-005, R.2/IC1 Process AK Report for Nitrate Operations at TA-55

5. TWCP-AK-2.1-006, R.2/IC1 Process AK Report for Pyrochemical Processes at TA-55

6. TWCP-AK-2.1-007, R.2/IC1 Process AK Report for Special Processing at TA-55

7. TWCP-AK-2.1-009, R.0/IC1 Process AK Report for Pu-238 Operations at TA-55

8. TWCP-AK-2.1-013, R.0 AK Report for NG Waste from Nitrate Operations at TA-55

9. TWCP-AK-2.1-014,R.0 AK Report for NG Waste from Miscellaneous Operations at TA-55

10. TWCP-AK-2.1-016,R.0 AK Report for NG Waste from Special Processing Operations at TA-55

11. TWCP-AK-2.1-017,R.0 AK Report for NG Waste from Metal/Pyrochemical Operations at TA-55

"The simplest questions are the hardest to answer."
Northrop Frye

Catherine H. Smith
Project 2010
RRES-CE Certification Group
Risk Reduction & Environmental Stewardship Division
Phone: 667-0113 Page: 664-7104

INTERIM CHANGE REQUEST

LA-UR-02-1715

☑ TWCP ☐ WRR ☐ Other **If Other, please identify:**	**IC Number:** 1
Person Requesting this Interim Change: Sandy Wander	
DOCUMENT INFORMATION	
Document Title: Process Acceptable Knowledge Report for Nitrate Operations at TA-55	**Document No./Revision:** TWCP-AK-2.1-005,R.2 (LA-UR-02-1715)
Effective Date of Current Document: 05/17/01	**Document Preparer:** John Musgrave

CHANGE INFORMATION: Please ensure the following changes are made:

Section/Page	Change:	Reason/Justification:
Title Page, p.1	Delete "Summary" from title to read: "Process Acceptable Knowledge Report for Miscellaneous Operations at TA-55"	Clarification
Global	Change all occurrences of "Sampling Plan" to "AK Information Summary"	Document title change
Note and 3rd column heading / pp. vi and ix	Delete "summary" from "NOTE" at top if page vi and from "*" note at bottom of page ix Change 3rd column heading on pages vi–ix to read:"Process AK Report*" Delete entire 4th column	Clarification
Notes and 3rd column heading / pp. vi and ix	Delete "summary" from "NOTE" at top of page vi and from "*" note at bottom of page viii Delete the word "summary" in third column heading	Clarification
Page xi, second paragraph, last sentence	Add "Cm-244" to Radioisotope content of the waste listing between Pa-231 and Cs-137	TWCP-5165 indicates possibility of Cm-244 in waste. Added at request of NDA operations leader.
Page xi, bullet list	Add as Bullet 3: "D004, D010: P/S code HRA prior to 1984" Bullet 4: Add "except NR" between "P/S codes" and "in nitrate operations" Bullet 5: Delete "MB", add "CD, DS, HCD, HD, LR, RCM, RFX, RR" Bullet 9: Add "RB, RBJ, SP" Bullet 10: Add "AO, RCM, RFX" Bullet 17: Add "AL, ATL, ED, MPD, SC	Per SME, codes applicable prior to 1984 to P/S code due to possible usage. NR code never activated, per SME Per SME, MB used high purity Ba at <TCLP levels. Additional codes added per SME, HWN should be same as other P/S codes in that category. Update report to make text and listings agree, per SME Update report to make text and listings agree, per SME Per SME, P/S codes should carry same HWNs as other is category.

Global search and replace	From all references to "process AK summary report," delete "summary" to read "process AK report" From all titles that previously read "Process Acceptable Knowledge Summary Report, " delete "Summary" to read "Process Acceptable Knowledge Report"	Clarification
3.5.6.19/p. 29	In second paragraph, change first sentence to read ". . . process, **but** ~~and~~ are ~~not~~ introduced with the feed materials **consisting of ash and miscellaneous materials contaminated with D006, D007, D008, D009, and D011**." Delete second sentence.	Correction of AK information
Table 1, p. 44	Column 1, row 1 (Miscellaneous materials): Delete "sand, slag" and "crucibles" Column 3, row 1 (Miscellaneous materials): Delete "CR"	Per SME, sand, slag, and crucibles would not be contaminated with these RCRA heavy metals. Per SME, this P/S code would not be associated with these HWNs.
Section 4.2, pp. 50, 51	Add "D009" to AL, ATL, MPD, and SC Insert "AO" to list (after AL) and "D006, D007, D008, D009, D011" To CD, add "D005" To DS, add "D005" and "D009" To HCD, add "D005" To HD, add "D005" To LR, add "D005" Insert "RCM" to list (after RC) and add "D005, D006, D007, D008, D009, D011" Insert RFX to list (after REM) and add "D005, D006, D007, D008, D009, D011" To SP, add "D006" and "D008"	Per SME , P/S codes have possible contamination of D009 due to feed materials. Update report to make text and listings agree, per SME
Attach. 3, p. 1 of 10	Add "D009" to timelines AL and ATL Add "D006, D007, D009, D011" [from 6/86 through 12/88] to timeline AO.	Timeline updated due to addition of code per SME Timeline updated due to addition of codes per SME.
Attach. 3, p. 2 of 10	For timeline CF, replace "(See Notes 4 and 6)" with "(See Note 4)"	Note did not apply when reviewed.
Attach. 3, p. 3 of 10	Add "D005" to DS timeline Add "D009" to ED timeline	Timeline updated due to addition of code per SME Timeline updated due to addition of code per SME
Attach. 3, p. 4 of 10	Add "D005" to HD/CD/HCD timeline. Remove Note 15	Timeline updated due to addition of code per SME. Note 15 was typo error.

Attach. 3, p. 5 of 10	Add "D005" to LR timeline Add "D009" to MPD timeline Delete "D005" and "D008" from MB timeline	Timeline updated due to addition of code per SME Timeline updated due to addition of code per SME P/S code never activated.
Attach. 3, p. 7 of 10	Add "D006, D007" to RB/RBJ timeline from 1/28/87-3/6/92 and 4/15/94-8/15/99 Add "D005, D006, D007, D009, D011" to RCM and RFX timelines Add "D005" to RR timeline Add "D009" to SC timeline Add "D006" to SP timeline	Timeline updated due to addition of code per SME. Report updated to be consistent with AK information in text. Timeline updated due to addition of code per SME Timeline updated due to addition of code per SME Timeline updated due to addition of code per SME Timeline updated due to addition of code per SME
Attach. 4, pp. 1–3, 6–10, 12–14	Add "*D008" to the "EPA Codes" column for all rows and insert the following note at the end of the table: "*D008 due to leaded gloves" All additions are to "EPA Codes" column. All references are to "P/S Code" column. AL: Add "D009" AO: Add "D006, D007, D009, D011" ATL: Add "D009" CD: Add "D005" DS: Add "D005" ED: Add "D009" HCD: Add "D005" HD: Add "D005" HRA: Add "D004, D005, D010" LR: Add "D005, *D008" MB: Delete "D007, D008, D009" MPD: Add "D009" RB: Add "D006, D007, D008" RBJ: Add "D006, D007, D008" RC: *D008 RCM: Add "D005, D006, D007, D008, D009, D011" RFX: Add "D005, D006, D007, D008, D009, D011" RO: Add "*D008" RR: Add "D005" SC: Add "D009" SP: Add "D006" TDC: Add "*D008"	Table updated with "*" to reflect leaded gloves. Table updated to reflect additional information from SMEs.

Attach. 6, pp. 1, 2	Add new Attachment 6 and update "Contents" page to reflect addition Add following paragraph to end of Section 2.0: "When discrepancies in AK information are discovered, they are documented and resolved in accordance with *Acceptable Knowledge Documentation* (TWCP-QP-1.1-021). The resulting documentation is found in Decision/Discrepancies Resolution Documentation (Attachment 6)."	New TWCP-QP-1.1-021 requirement

Date changes submitted: 02/25/02	**Desired effective date for changes**:

INTERIM CHANGE APPROVAL

Document Preparer: S Wander		Reviewer (if applicable): Facility Rep	
Signature: Sandy Wander	Date: 3/19/02	Signature: Wayne A. Pringle	Date: 3/20/02
Site Project QA Officer: M A Gavett		LAAO (if implementing WAP requirements): N/A	
Signature: M A Gavett	Date: 3/21/02	Signature:	Date:
☑ IC Approved ☐ Major Rev. ☐ Hold for next Rev.		Do changes affect WAP data collection, data quality, or performance criteria? ☐ Yes ☑ No If yes, date of CBFO approval: _____ (documentation attached)	
Site Project Mgr/Line Mgr: P Rogers			
Signature: Pamela Rogers	Date: 3/19/02		
USQ Screener (if applicable): NA			
Signature: [illegible]	Date: 3-25-02		

NOTE: Changes can be designated on the document and attached to this form.

Effective date for this interim change: 3/21/02

TA-55 PLUTONIUM FACILITY
ACCEPTABLE KNOWLEDGE REPORT

REPORT TITLE: Process Acceptable Knowledge ~~Summary~~ Report for Nitrate Operations at TA-55

REPORT NUMBER: TWCP-AK-2.1-005,R.2 (LA-UR-01-2555)

WASTE GENERATED FROM PROCESS/STATUS CODES: AL, AO, AP, AS, AT, ATL, BAC, BF, BL, BM, BU, CC, CD, CF, CH, COD, COL, CPOD, CR, DF, DP, DS, ED, ETD, EV, FA, FC, FX, GMS, HC, HCD, HD, HGMS, HP, HRA, IA, IS, LC, LG1, LG2, LR, MAG, MAS, MB, MELL, MF, ML, MPD, NC, NL, NR, OD, OH, OY, PA, PAF, PR, PS, PT, PTS, RB, RBJ, RC, RCM, RFX, RO, RR, SC, SP, SSD, SX, TDC, UPS, US, US2, VC, VP1, VP2, VP3, VUL, ZD

EFFECTIVE DATE: 05/17/01

NEXT REVIEW DATE: 05/17/03

DOCUMENT PREPARER:

John Musgrave	5/7/01
NAME	DATE

APPROVALS:

June Fabryka-Martin	5/7/01
INDEPENDENT TECHNICAL REVIEWER/EDITOR	DATE
Mario R. Lo	5/12/01
SITE PROJECT MANAGER	DATE
Sandy Wander	5/14/01
WASTE CERTIFICATION OFFICIAL	DATE
[illegible]	5/14/01
SITE PROJECT QA OFFICER	DATE
Charles L. Fox	5/7/01
FACILITY REPRESENTATIVE	DATE

© 2000, 2001 University of California

HISTORY OF REVISIONS

Revision No.	Date	Pages Revised	Reason for Change
0	06/23/00	—	New report (TWCP-03940)
1	12/04/00	All	Make report a controlled document and respond to CAR-00-036
2	05/17/01	All	Respond to CBFO review comments and update to include new AK information
2/IC1	03/21/02	All	Clarification to procedure and SME updates

CONTENTS

Section **Page**

ACRONYMS iv

TA-55 PROCESS/STATUS (P/S) CODE INDEX vi

PROCESS ACCEPTABLE KNOWLEDGE SUMMARY x

1.0 INTRODUCTION 1

2.0 METHODOLOGY USED TO SEARCH FOR AK RECORDS 1

3.0 DESCRIPTION OF THE PROCESS WASTE 3
- 3.1 Facility and Mission 3
- 3.2 Basis, Rationale, and Assumptions Used to Delineate the Waste Streams 3
- 3.3 Waste Physical Form and Content Description 4
- 3.4 Waste Volume and Time Period of Waste Generation 4
- 3.5 Waste Generation Processes 4
- 3.6 Material Inputs to the Waste Generation Process 42

4.0 ASSIGNMENT OF EPA HAZARDOUS WASTE NUMBERS 50
- 4.1 F, K, and P Listings 50
- 4.2 Toxicity Listings 50

5.0 VERIFICATION THAT IGNITABLE, REACTIVE, AND CORROSIVE WASTES WERE EXCLUDED 52

6.0 VERIFICATION THAT INCOMPATIBLE CHEMICALS WERE PROHIBITED 53

7.0 VERIFICATION THAT THERE ARE NO COMPRESSED GASES, FREE LIQUIDS, NONRADIONUCLIDE PYROPHORICS, SEALED CONTAINERS GREATER THAN FOUR LITERS IN VOLUME, OR >1% RADIONUCLIDE PYROPHORICS 53

8.0 VERIFICATION THAT THERE ARE NO POLYCHLORINATED BIPHENYLS (PCBs) IN THE WASTE STREAM 54

9.0 CITED PROCEDURES AND REQUIREMENTS DOCUMENTS 54

Table
- 1 Process Feed Material for Nitrate Operations 43
- 2 P/S Codes with Radionuclides Other Than Pu in Feed Materials 44
- 3 Average Isotopic Content of Plutonium Material Types and Enrichments 47
- 4 Secondary Radionuclides in Process Wastes 47
- 5 Chemical Inputs to Processes Described in This Report 48

Attachments
- 1 Acceptable Knowledge Roadmap (21 pages)
- 2 LANL and TA-55 Site Maps (2 pages)
- 3 Timeline for Nitrate Operations (10 pages)
- 4 Process Inputs and Outputs (15 pages)
- 5 Generalized Process Status Diagram for Nitrate Processes (1 page)
- 6 Decision/Discrepancies Resolution Documentation (2 pages)

ACRONYMS

AK	acceptable knowledge
AK Information Summary	*Los Alamos National Laboratory Transuranic Waste Characterization Acceptable Knowledge Information Summary* (TWCP-PLAN-0.2.7-001)
CFR	*Code of Federal Regulations*
CLS	Chemistry and Laser Science [Division]—former name of C Division
CSMO	Central Scrap Management Office
D	RCRA hazardous waste number prefix for wastes with hazardous characteristics, defined in 40 CFR Subpart C, Sections 261.21 to 261.24
DL	discard limit
DOE	U.S. Department of Energy
DOR	direct oxide reduction
DTP	detailed technical procedure
DWLS	Discardable Waste Log Sheet
EPA	U.S. Environmental Protection Agency
F	RCRA hazardous waste number prefix for hazardous wastes from non-specific sources, defined in 40 CFR Subpart D, Section 261.31
FFTF	Fast Flux Test Facility
HEPA	high efficiency particulate air
HWN	[EPA] hazardous waste number
K	RCRA hazardous waste number prefix for hazardous wastes from specific sources, defined in 40 CFR Subpart D, Section 261.32
LANL	Los Alamos National Laboratory
LLW	low-level [radioactive] waste
MSE	molten salt extraction
MT	material type
N	Nitrate [designator for individual documents in nitrate operations reports in Attachment 1, Acceptable Knowledge Roadmap]
OSWER	Office of Solid Waste and Emergency Response [EPA]
P	RCRA hazardous waste number prefix for acute hazardous waste defined in 40 CFR Subpart D, Section 261.33
PCB	polychlorinated biphenyl
PF-4	Plutonium Facility, Building 4
P/S [code]	process status [code]
PVC	polyvinyl chloride
QA	quality assurance
R&D	research and development
RCRA	Resource Conservation and Recovery Act
RD&D	research, development, and demonstration
RLWTF	Radioactive Liquid Waste Treatment Facility
RMDC	Records Management/Document Control
SME	subject matter expert
SOP	safe/standard operating procedure
TA	technical area

TOPO	trioctyl phosphate oxide
TRU	transuranic
TWCP	Transuranic Waste Characterization/Certification Project
UCNI	Unclassified Controlled Nuclear Information
WAC	waste acceptance criteria
WIPP WAC	*Waste Acceptance Criteria for the Waste Isolation Pilot Plant* (DOE/WIPP-069)
WIPP WAP	Attachment B, Waste Analysis Plan, to the *Hazardous Waste Facility Permit Issued to the Waste Isolation Pilot Plant* (EPA No. NM4890139088)
WIPP	Waste Isolation Pilot Plant
WODF	Waste Origination and Disposition Form
WPRF	Waste Profile Request Form

TA-55 PROCESS/STATUS (P/S) CODE INDEX

NOTE: This index indicates the main process AK report and report section that covers each P/S code mentioned in this report.

P/S Code	P/S Name	Process AK Report*
AL	Ash Leach	Nitrate Operations
AO	Americium Processing Calcination	Nitrate Operations
AP	Americium Purification	Nitrate Operations
AS	Anode Heel Dissolution	Nitrate Operations
AT	Ash Testing	Nitrate Operations
ATL	Advanced Test Line for actinide separation (RD&D)	Nitrate Operations
BAC	Bacterial Decomposition of Cellulose Items	Nitrate Operations
BF	Unknown name for this P/S code	Nitrate Operations
BL	Blending	Nitrate Operations
BM	Burning Metal	Nitrate Operations
BU	Button Burning	Nitrate Operations
CC	Calcination	Nitrate Operations
CD	Hydroxide Cake Dissolution	Nitrate Operations
CF	Cement Fixation	Nitrate Operations
CH	Characterization	Nitrate Operations
CK	RD&D Volatile Fluoride Pu Recovery	Miscellaneous Operations
CL	Crucible Processing	Chloride Operations
CN	C-N-O Analysis	Metal Operation Processes
COD	Chlorinated Oxide Dissolution	Nitrate Operations
COL	Chlorinated oxide leach	Nitrate Operations
CPOD	Catalyzed Electrochemical Plutonium Oxide Dissolver	Nitrate Operations
CR	Crushing and Pulverizing	Nitrate Operations
CS	Chloride Solutions	Chloride Operations
CX	Chloride Anion Exchange	Chloride Operations
DF	DS Furnace and Oxide Preparation	Nitrate Operations
DP	Dry Processing	Nitrate Operations
DS	Ion Exchange	Nitrate Operations

P/S Code	P/S Name	Process AK Report*
ED	Cascade Dissolver	Nitrate Operations
ETD	Experimental Thermal Decomposition	Nitrate Operations
EV	Evaporator	Nitrate Operations
FA	Americium Processing	Nitrate Operations
FC	Canning	Nitrate Operations
FX	Cement to Drum	Nitrate Operations
GMS	Open Gradient Magnetic Separation	Nitrate Operations
HC	Calcination	Nitrate Operations
HCD	Hydroxide Cake Dissolution	Nitrate Operations
HD	Hydroxide Cake Dissolution	Nitrate Operations
HGMS	High Gradient Magnetic Separation	Nitrate Operations
HP	Cement Fixation	Nitrate Operations
HRA	Hanford Reservation Materials	Nitrate Operations
IA	Impure Americium Holding for Discard	Nitrate Operations
IB	Matrix Study of Pyrochemical Salts	Miscellaneous Operations
IS	Incinerator	Nitrate Operations
LC	Uranium/plutonium Processing	Nitrate Operations
LG1	Noncombustible Leach	Nitrate Operations
LG2	Hydroxide Cake Dissolution	Nitrate Operations
LR	Ion Exchange	Nitrate Operations
MAG	Magnetic Separation	Nitrate Operations
MAS	RD&D Experimental Processes	Nitrate Operations
MB	Nitric Dissolution of Molten Salts	Chloride Operations Nitrate Operations
MELL	Mediated Electro-Oxidation of LLW	Nitrate Operations
MF	Metals Furnace	Nitrate Operations
ML	Non Pu Metal Leach	Nitrate Operations
MPD	Cascade Dissolver	Nitrate Operations
NC	Noncombustible Leach	Nitrate Operations
NL	Noncombustible Leach	Nitrate Operations
NR	Nitrate Recovery	Nitrate Operations

P/S Code	P/S Name	Process AK Report*
OD	Oxide Dissolution	Nitrate Operations
OH	Hydroxide Precipitation	Nitrate Operations
OY	Oxalate Precipitation	Nitrate Operations
PA	Passivation	Nitrate Operations
PAF	Passivation Furnaces	Nitrate Operations
PR	Peroxide Precipitation	Nitrate Operations
PS	Peroxide Precipitation of MSE Salts	Nitrate Operations
PT	Plutonium Thorium Separation	Nitrate Operations
PTS	RD&D Pretreatment Study	Nitrate Operations
RB	Roasting and Blending	Nitrate Operations
RBJ	Roasting & Blending Jr	Nitrate Operations
RC	Rotary Calciner	Nitrate Operations
RCM	Rich Column Material Ion Exchange	Nitrate Operations
RFX	Ion Exchange	Nitrate Operations
RO	Oil Recovery	Nitrate Operations
RR	Ion Exchange	Nitrate Operations
SC	Cascade Dissolver, G437	Nitrate Operations
SE	Solvent Extraction	Chloride Operations
SO	Super Oxidizer, FOOF Program	Miscellaneous Operations
SP	Scrap Dissolution, G438	Nitrate Operations
SSD	Special Scrap Dissolution	Nitrate Operations
SX	Americium Processing Silicon Removal	Nitrate Operations
TDC	Thermal Decomposition of Cellulose Items R&D	Nitrate Operations
UPS	Uranium/plutonium Separation	Nitrate Operations
US	Uranium Separation for Solid Solution Feed	Nitrate Operations
US2	Uranium Separation for Non-solid Solution Feed	Nitrate Operations
VC	Variable CSMO Scrap Dissolution	Nitrate Operations
VP1	CSMO Scrap Dissolution	Nitrate Operations
VP2	Polycube Processing	Nitrate Operations

P/S Code	P/S Name	Process AK Report*
VP3	Hydroxide Precipitation	Nitrate Operations
VUL	Vessel Unloading	Nitrate Operations
ZD	Scrap Oxide Dissolution	Nitrate Operations

* Process AK reports: Chloride Operations (TWCP-AK-2.1-002,R.2), Metal Operations (TWCP-AK-2.1-003,R.2), Miscellaneous Operations (TWCP-AK-2.1-004,R.2), and Nitrate Operations (this report)

PROCESS ACCEPTABLE KNOWLEDGE SUMMARY

Waste-generating process: Nitrate Operations

P/S codes: AL, AO, AP, AS, AT, ATL, BAC, BF, BL, BM, BU, CC, CD, CF, CH, COD, COL, CPOD, CR, DF, DP, DS, ED, ETD, EV, FA, FC, FX, GMS, HC, HCD, HD, HGMS, HP, HRA, IA, IS, LC, LG1, LG2, LR, MAG, MAS, MB, MELL, MF, ML, MPD, NC, NL, NR, OD, OH, OY, PA, PAF, PR, PS, PT, PTS, RB, RBJ, RC, RCM, RFX, RO, RR, SC, SP, SSD, SX, TDC, UPS, US, US2, VC, VP1, VP2, VP3, VUL, ZD

Type of waste generated:

Retrievably stored and newly generated, mixed and non-mixed debris; waste immobilized in cement

Site: LANL

Facility Mission (including defense and non-defense programs):

TA-55 has extensive capabilities for the extraction and recovery of plutonium from residues and scraps generated from operations at various LANL facilities and other DOE sites in the defense complex. The recovered plutonium is converted into pure plutonium feedstock. These manufacturing and recovery operations, as well as associated maintenance operations, and TA-55 plutonium research are the sources of TRU waste contaminated scrap, residues, and debris generated at TA-55. The scrap and residues are processed to recover as much plutonium as practicable before disposal. Wastes from nitrate operations are generated from plutonium recovery and purification for defense and non-defense programs; these wastes are generated and produced in the same rooms and gloveboxes and so were not segregated until August 27, 1998.

Area(s) or building(s) where the process waste was generated (including operations carried out in those areas):

Process wastes from nitrate operations are generated in Building PF-4, Rooms 208, 401, 409, 420, and 434, of the TA-55 Plutonium Facility. Plutonium operations included reclaiming plutonium from scrap and residues produced from numerous feed sources.

Description of the process waste (physical form and typical content description):

Waste from nitrate operations consists primarily of debris waste, including cellulose-based waste, plastic-based waste, rubber, metal debris, and glass debris; and waste immobilized in cement.

Summary Category Group: S3000, S5000

Waste Matrix Codes: S3000, S3100, S3200, S5100, S5300, S5400

Description of the waste-generating process:

The overall goal of the nitrate operations is to recover plutonium from metal, metal alloys, scrap, and residues and produce a purified plutonium oxide product or feedstock for conversion to

metal. Processes include pretreatment, dissolution, purification, evaporation, and cement fixation.

Process feed:

Plutonium metal or metal alloys, oxides and hydroxide cakes; pyrochemical salts; crucible pieces; anode heels; ash; analytical laboratory solutions; and residues from other DOE facilities.

Radioisotopic content of the waste:

Variety of plutonium material types with different well-defined isotopic compositions. Am-241, Np-237, and U-234 may be present at detectable concentrations as decay products of their plutonium precursors. Some of the processes separate plutonium and americium, or plutonium and uranium, so that the waste will usually be enriched in Am-241 or U-234, but may also be depleted in some cases. Pa-231, Cm-244, and Cs-137 may be present in trace amounts due to their widespread presence as contaminants in TA-55 operations.

RCRA Constituents/EPA Hazardous Waste Numbers:

- F002 and F003: P/S codes CF and HP
- No K or P codes
- D004, D010: P/S code HRA prior to 1984
- D008: all P/S codes except NR in nitrate operations for the generation of leaded gloves
- D005: P/S codes COL, CD, DS, HCD, HD, LR, RCM, RFX, RR
- D005, D006, D007, D008, D011: P/S codes AL, AT, ATL, ED, ETD, IS, MPD, PTS, RC, SC, TDC
- D005, D006, D007, D008, D009, D011: P/S code HRA
- D005, D008: P/S code VUL
- D006, D007, D008: P/S codes OD, RB, RBJ, SP, SSD
- D006, D007, D008, D009, D011: P/S codes AO, CD, DS, EV, FX, HCD, HD, HGMS, IA, LG2, LR, MELL, OH, RCM, RFX, RR
- D006, D007, D008, D011: P/S codes AS, BF, BU
- D006, D008: P/S codes LG1, ML, NC, NL, VC
- D006, D008, D040: P/S code RO
- D007: P/S codes PT, SP
- D007, D008 , D009, D011, D019, D021, D022, D039: P/S codes CF, HP
- D007, D009: P/S codes AP, MB
- D009: P/S codes AL, ATL, ED, MPD, SC, VP1, VP3
- D011: P/S code CPOD

Process waste volume (if known):

Waste volumes for each P/S code have not been tracked. Instead, waste items are segregated into similar material types and packaged in waste containers. Waste containers are segregated into waste streams in the Sampling Plan, and waste stream volumes are reported in that document.

Years of generation for the process waste: 1979–present

PROCESS ACCEPTABLE KNOWLEDGE REPORT FOR NITRATE OPERATIONS AT TA-55

1.0 INTRODUCTION

All transuranic (TRU) waste must be sufficiently characterized and certified before it is shipped to the Waste Isolation Pilot Plant (WIPP). The U.S. Environmental Protection Agency (EPA) allows use of acceptable knowledge (AK) for waste characterization. EPA uses the term AK in its guidance document, *Waste Analysis at Facilities that Generate, Treat, Store and Dispose of Hazardous Waste.* Attachment B, Waste Analysis Plan, to the *Hazardous Waste Facility Permit Issued to the Waste Isolation Pilot Plant* (EPA No. NM4890139088) (WIPP WAP) defines AK and provides guidelines on how AK should be obtained and documented.

This process AK summary report was prepared in accordance with *Acceptable Knowledge Documentation* (TWCP-QP-1.1-021). The primary purpose of this report is to systematically organize, evaluate, and summarize detailed AK information about individual processes that generated TRU waste in the Plutonium Facility at Technical Area (TA) 55, one of the TRU-waste generators at Los Alamos National Laboratory (LANL). By doing so, this report provides detailed technical support for several waste stream AK summary reports that include these process wastes.

2.0 METHODOLOGY USED TO SEARCH FOR AK RECORDS

The AK search for the information related to TA-55 waste streams resulting from nitrate operations covered:

- Review of the *Los Alamos National Laboratory Transuranic Waste Characterization Acceptable Knowledge Information Summary* (TWCP-PLAN-0.2.7-001,R.5) (AK Information Summary) that includes information regarding all TRU waste streams

- Review of documents related to waste generation and waste management activities at TA-55 as listed on the Acceptable Knowledge Roadmap (Attachment 1)

- Interviews with personnel involved with waste generation and waste management at TA-55 as listed on the Acceptable Knowledge Roadmap (Attachment 1)

NOTE: Much of the AK information related to nitrate operations is contained in Transuranic Waste Characterization/Certification Project (TWCP) Record Nos. TWCP-3548, TWCP-3566, TWCP-3567, and TWCP-3568. Individual documents in these records have been assigned a separate identifier, N-nn, where nn is a sequential 1- or 2-digit number. This referencing nomenclature is used throughout this report and its attachments.

- Analyses of individual processes generating waste, and evaluations of the potential for Resource Conservation and Recovery Act (RCRA)-regulated constituents to be

present in the process wastes, based on subject matter expert (SME) interviews and any relevant data

The TWCP Records Management/Document Control (RMDC) Center contains copies of the documents referenced in this report. Unclassified Controlled Nuclear Information (UCNI) is contained in these records, and will not be included in this report. Such records are identified as UCNI in the Acceptable Knowledge Roadmap (Attachment 1).

This process AK report is part of a set of closely related reports about TRU-waste generating activities at TA-55. For convenience in organizing AK for plutonium processing at this facility, the processes were categorized into six operational areas. The multiple processes in each area are described in detail in the following six process AK reports for plutonium:

- *Process Acceptable Knowledge Report for Chloride Operations at TA-55* (TWCP-AK-2.1-002)
- *Process Acceptable Knowledge Report for Metal Operation Processes at TA-55* (TWCP-AK-2.1-003)
- *Process Acceptable Knowledge Report for Miscellaneous Operations at TA-55* (TWCP-AK-2.1-004)
- *Process Acceptable Knowledge Report for Nitrate Operations at TA-55* (TWCP-AK-2.1-005) (this report)
- *Process Acceptable Knowledge Report for Pyrochemical Processes at TA-55* (TWCP-AK-2.1-006)
- *Process Acceptable Knowledge Report for Special Processing at TA-55* (TWCP-AK-2.1-007)

Each process AK report contains information on multiple individual processes that are assigned unique identifiers called process/status (P/S) codes. For example, nitrate operations include over 80 individual processes that are each assigned a P/S code, as listed on the cover page of this report. The search and compilation of AK information was based on P/S code because that is the most detailed level of process information generally recorded in waste generation records. The process AK reports frequently cross-reference one another because P/S codes in one operational area often provide the material feed for P/S codes in another area. An index of P/S codes cited in this process AK report follows the list of acronyms; this index lists process descriptions and the primary process AK report in which that P/S code is discussed.

When discrepancies in AK information are discovered, they are documented and resolved in accordance with *Acceptable Knowledge Documentation* (TWCP-QP-1.1-021). The resulting documentation is found in Decision/Discrepancies Resolution Documentation (Attachment 6).

3.0 DESCRIPTION OF THE PROCESS WASTE

The following sections describe processes used in nitrate operations, and identify the resulting wastes as well as outputs that are sent to other operations, such as pyrochemical operations, for further processing.

3.1 Facility and Mission

The TA-55 Plutonium Facility (Building PF-4) recovers plutonium from scrap and residues generated throughout the U.S. Department of Energy (DOE) defense complex, and processes it into pure plutonium oxide for conversion to metal and other products. A LANL site map and a detailed map of the buildings at TA-55, including Building PF-4, are shown in Attachment 2.

Most processes in nitrate operations were solely defense related (TWCP-614, TWCP-4162). However, wastes from various processes were not segregated by funding source, waste-generating process, or waste-generating location (e.g., room or glovebox) until recently (August 27, 1998), but rather were segregated and packaged based on waste type (TWCP-887, TWCP-4162, TWCP-4167). Consequently, a single waste container often contains wastes from multiple processes. Some debris waste was also co-mingled with room trash related to these same operations (both defense and non-defense), and was initially boxed as low-level waste. Subsequently, some of these waste boxes were returned for disposal in drums as TRU waste when on-site radioassay results showed them exceeding the low-level discard limits (DLs) (TWCP-816).

3.2 Basis, Rationale, and Assumption Used to Delineate the Waste Streams

The basis for delineation of TA-55 waste streams was established by the evolving set of LANL and TA-55 waste management plans and site-specific procedures, which date back to the start of operations at the Plutonium Facility in 1978 (TWCP-352, TWCP-697, TWCP-700, TWCP-701, TWCP-3943). The stated guidance and practice from the beginning, continuing to the present day, has been to handle and package all combustible and noncombustible debris waste in a similar fashion, regardless of the process (i.e., P/S code) of origin. Inspection, collection, documentation and packaging operations of solid, certifiable TRU wastes at TA-55 are conducted in PF-4 by a waste management section or team (TWCP-352, TWCP-700, TWCP-701, TWCP-3943). Wastes from all TRU waste-generating activities at TA-55 are handled and packaged into waste containers by this team based on the material content of the waste, without regard to P/S code. Materials are considered waste only when they have been received and processed by the waste management team.

Assignment of a particular waste container to a waste stream is then made on the basis of waste generator information compiled in the AK Information Summary. Waste generator information is reviewed to identify the types and sources of waste items present in each drum, to evaluate the most appropriate waste

summary group, waste matrix code, and potential for the presence of hazardous constituents. In the AK Information Summary, TA-55 wastes have been assigned to waste streams based on the waste segregation schemes used by TA-55:

- By radioisotope content (Pu-238 or Pu-239 material type)
- By material matrix (combustible, noncombustible, metal, glass, etc. waste types)
- By hazardous waste status (mixed, non-mixed, or special case waste streams)

3.3 Waste Physical Form and Content Description

Wastes generated during nitrate operations are primarily debris wastes and wastes entered into the cement fixation process or sent to the Radioactive Liquid Waste Treatment Facility (RLWTF) at TA-50. General debris waste categories from nitrate operations include

- Cellulose-based waste (for example, paper, cloth)
- Plastic-based waste (for example, gloves, tape, labware)
- Rubber
- Magnesium oxide crucibles
- Metal debris (for example, wire, hose clamps, tools, labware)
- Glass debris

These debris items are contaminated with small amounts of radioactive and chemical substances from nitrate operations. The cemented waste includes cemented organics and cemented inorganics, including emulsified oils.

3.4 Waste Volume and Time Period of Waste Generation

This report covers waste streams generated from 1979, when nitrate operations first began at TA-55, to the present. Process wastes from nitrate operations have different associated EPA hazardous waste numbers (HWNs) depending on the time period during which they were generated. The P/S codes, their time period of generation, and corresponding EPA HWNs are shown graphically in Attachment 3, Time Lines.

Waste volumes for each P/S code have not been tracked. Instead, waste items are segregated into similar material types and packaged in waste containers. Waste containers are assigned to waste streams in the AK Information Summary, and waste stream volumes are reported in that document.

3.5 Waste Generation Processes

The following subsections describe the generation of waste by nitrate operations, as well as product and waste outputs to other processes or operations.

Manufacturing and research operations performed at TA-55 in the production of plutonium also generate plutonium-contaminated scrap and residues. These residues are processed to recover as much plutonium as is practical. TA-55 has extensive capabilities for the extraction and recovery of plutonium from residues and scraps generated from operations at various LANL facilities and other DOE sites. These recovery and manufacturing operations, associated maintenance operations, and TA-55 plutonium research are the sources of TRU waste generated at TA-55. Detailed background information about the TA-55 plutonium recovery processes can be found in *Waste from Plutonium Conversion and Scrap Recovery Operations* (TWCP-352 and TWCP-886).

This report addresses the aqueous nitrate-based recovery processes. The primary feed source for the nitrate recovery operations is plutonium residues from other recovery operations (e.g., chloride or pyrochemical), metal preparation, metal fabrication, analytical laboratory operations, and residues from other DOE facilities (TWCP-3548/N-1). The overall goal of the nitrate recovery operations is to recover plutonium from scrap and residues and produce a purified plutonium oxide for conversion to metal. The nitrate recovery operations can be divided into the following process steps:

- Pretreatment
- Dissolution
- Purification, including conversion to oxide
- Cement fixation

Each of these process categories is described below. The timeframe and EPA HWNs associated with each P/S code are shown on the timelines included as Attachment 3; the dates can be correlated to the dates on the procedures listed in Attachment 1. Attachment 4 contains a complete listing of P/S codes for nitrate operations, their descriptions, feed materials, chemical inputs, outputs and applicable EPA HWNs. A simplified process flow diagram for nitrate operations is found in Attachment 5.

3.5.1 Pretreatment (P/S codes BL, BM, BU, CR, DP, ETD, GMS, HGMS, IS, MAG, MAS, MF, OH, OY, PA, PAF, PTS, RC, RO, TDC, VP2, VUL)

Pretreatment primarily includes physical processes used to prepare scrap and residues for the next step, dissolution (TWCP-3548/N-1). Pretreatment may have included any or all of the following processes: calcination (RC), caustic leaching, chemical separation (hydroxide or oxalate precipitation), crushing and pulverizing (CR), distillation, filtering of liquids or oils, incineration (IS), magnetic separation (GMS, MAG, MAS, HGMS), passivation (PA, PAF), scraping, and sorting (TWCP-3548/N-1 through N-18). As materials are received from various operations within TA-55, they are sorted and sent to other pretreatment processes or directly to dissolution depending on the

physical nature of the scrap or residue and on the amount and type of plutonium associated with the material. Loose plutonium may be brushed off of a scrap item and then the item sent to dissolution. Chunks of plutonium-bearing residue (e.g., sand, slag, crucibles) are sent for crushing and pulverizing (CR). Magnetic plutonium-bearing materials are sorted using magnetic separation (GMS, MAG, MAS, HGMS) into either lean or rich plutonium-bearing residues (TWCP-3548/N-1 and N-2). The lean plutonium-bearing residues are sent to cement fixation (CF) if plutonium concentrations are below the DL (TWCP-3548/N-1 and N-2). Finely divided plutonium in sweepings or powder form is sent directly to dissolution. Lapping or grinding oils are filtered if necessary, and the liquid portion is sent to P/S code CF for immobilization in cement, or to P/S code RO for absorption on vermiculite, if plutonium concentrations are below the DL (TWCP-3548/N-10 and N-15). If there are a significant quantity of filtered solids, they are calcined and sent to dissolution (TWCP-3568/N-82).

Thermal pretreatment processes have also been used to prepare plutonium-bearing materials for dissolution (TWCP-3548/N-1). Passivation (PA, PAF) converts pyrophoric plutonium metal and other reactive metals to a stable oxide prior to dissolution. These materials were heated in a tube furnace to approximately 600 °C (PA, PAF) (TWCP-3548/N-7 and N-11). Cellulose materials contaminated with plutonium (e.g., cheesecloth, wood, paper, cardboard) have been incinerated (IS) or thermally decomposed (TDC) (TWCP 3548/N-1, N-5, N-6, N-7, N-11, and N-12). Ash from the incinerator was sent to a calciner (P/S code RC) to remove any residual organic materials and to ensure complete oxidation prior to dissolution. Thermal decomposition of cellulose (P/S code TDC) is performed in an argon atmosphere and the vapors and particulate matter are trapped in a caustic scrubber (TWCP 3548/N-6 and N-12, TWCP 3568/N-82). The caustic solution generated by the scrubber is sent to the TA-50-1 RLWTF after meeting the TA-50-1 waste acceptance criteria (WAC) (TWCP-3548/N-12). The wash water is filtered and sent to purification if plutonium concentrations are above the DL, or to the TA-50-1 RLWTF if it meets the TA-50-1 WAC. The rags are disposed as debris waste or thermally decomposed (TDC) (TWCP 3548/N-4, TWCP 3568/N-76). The ash from the thermally decomposed rags was rotary calcined (RC) before it was sent to dissolution (TWCP 3568/N-79). The burning of plutonium metal (BM), anode heels, and oxides was used to prepare these materials for either dissolution or storage in the vault (TWCP 3548/N-13 and N-14). Distillation was used to recover plutonium from polystyrene cubes (VP2) (TWCP 3548/N-18).

A caustic (hydroxide) leach process has been used to pretreat electro-refining furnace scrapings from the Rocky Flats Plant, and other residues

high in chlorides. Chlorides were removed using sodium hydroxide and the treated residues were then dissolved in nitric and hydrofluoric acid (TWCP 3566/N-26, N-26A, and N-30E). In this case, the caustic solution would be sent to the TA-50-1 RLWTF if it met the TA-50-1 WAC, and the filtered solids would continue through the dissolution process.

In overview, particulate solids from the pretreatment step are sent to dissolution if plutonium concentrations are above the DL and to cement fixation (CF) if concentrations are below the DL (TWCP-3548/N-1 through N-18). Liquids are sent to purification if plutonium concentrations are above the DL and to the RLWTF if they meet the TA-50-1 WAC (TWCP-3548/N-1 through N-18). Chemicals used in the pretreatment steps are listed in Table 5 in Section 3.6.3. Chemicals used in these steps that are covered by 40 *Code of Federal Regulations* (CFR) Part 261, including Appendix VIII of those regulations, are (1) hydrofluoric, nitric, oxalic, and sulfuric acid, (2) potassium and sodium hydroxide, (3) hydrogen peroxide (an oxidizer), and (4) trichloroethylene. EPA HWNs D001 and D002 do not apply to the solid wastes despite the use of acids, bases and an oxidizing solution in these processes because there is no free liquid in these wastes. Trichloroethylene was only used in 1979 in P/S code RO, as a diluent for filtering oils (not used for solvent properties [TWCP-3548/N-10 and N-18]). Thus, the EPA HWN D040, but not F002, applies to waste generated under P/S code RO during 1979.

Additional EPA HWNs apply to most of these P/S codes as a result of the presence of regulated chemicals in the feed materials (see Table 1 in Section 3.6) or as a result of contamination introduced from the use of laboratory equipment or supplies or from glovebox maintenance operations (section 4.2). Leaded gloves and other lead-containing items were discarded as described in section 3.6.1.

NOTE: For some of these P/S codes, no formal procedures could be found and the necessary information was extracted from process flow diagrams and SME input. More detailed descriptions of such P/S codes that are included in this pretreatment section are provided in section 3.5.6, as follows: P/S codes BL, BU, DP, ETD, HGMS, MF, PA, PTS, RC, RO, and VP2.

3.5.2 Dissolution (P/S codes AL, AS, AT, ATL, BAC, CD, COD, COL, CPOD, ED, HCD, HD, LC, LG1, LG2, MB, MELL, ML, MPD, NC, NL, NR, OD, PS, PT, SC, SP, SSD, UPS, US, US2, VC, VP1, ZD)

Dissolution is comprised of numerous processes that generate a plutonium-nitrate solution for feed to a purification process (TWCP-

3548/N-1, TWCP-3568/N-79). The main chemicals used in dissolution are nitric acid and calcium fluoride and/or hydrofluoric acid, which together form a standard leach solution. Additionally, other chemicals are used for particular dissolution processes. Depending on the particular process involved, dissolution takes place in pots or in cascade systems. Debris waste items may be wiped with a cloth soaked in a nitric acid/calcium fluoride solution to recover surface contamination of plutonium. The cloths are dunked in water a few times and wrung out (TWCP-3568/N-82). The solutions from the cloths are collected and filtered. The solids from the solutions are recycled through the dissolution process if plutonium concentrations are above the DL, or sent to cement fixation or disposed as debris waste if concentrations are below the DL (TWCP-3548/N-1, TWCP-3568/N-79). The plutonium-bearing solutions were sent to purification. The cloths are reused if they are not falling apart; otherwise, they are discarded as solid waste or sent to incineration (IS), depending on the nuclear material content (TWCP-3568/N-82).

Plutonium on the surface of metal and noncombustible debris waste items is also recovered by leaching or dipping the waste item into the standard leach solution (ML, NC) (TWCP-3548/N-1, TWCP-3566/N-22, N-29, N-30, and N-31, TWCP-3568/N-79). Plutonium-bearing solutions are sent to purification, while the leached items below the DL are discarded. Lead-containing waste items (e.g., leaded gloves) below the DL are segregated, packaged separately, and assigned the EPA HWN D008 (TWCP-3567/N-39). Other leached metal items containing RCRA-regulated heavy metals are also segregated from metal debris that is not RCRA-regulated and are assigned the appropriate EPA HWNs (e.g. D006 for cadmium) (TWCP-3568/N-84).

From the late 1970s to the present, many plutonium-bearing materials are dissolved in a standard leach solution of nitric and hydrofluoric acid after appropriate pretreatment or preparation (TWCP-3566/N-30A through N-30F, TWCP-3568/N-79). These materials include alloys, anodes, carbides, casting skulls, electrorefining residues, metals, and plutonium oxide. After dissolution, solids are discarded if below the DL or recycled if above the DL, while solutions are sent to purification. These solutions contain dissolved heavy metals (e.g., lead, cadmium, mercury, or chromium) below the regulatory levels (TWCP-3568/N-82). These metals may be concentrated to above the regulatory levels in the purification step (as a hydroxide cake) or in the evaporator step, as addressed later in this report.

Starting in 1990, plutonium oxide was also dissolved using an electrochemical process that incorporated the chemicals found in the standard leach solution as well as ferric ammonium sulfate, potassium

thiocyanate, and silver nitrate (CPOD) (TWCP-3548/N-1 and TWCP-3566/N-21). The electrochemical cell used in this process relied on silver acting as a catalyst for the dissolution of plutonium. Waste from this process was considered suspect hazardous for the presence of silver and was assigned the EPA HWN D011. This process was replaced in 1994 by a similar electrochemical process (P/S code MELL) that used cobalt nitrate or cerium nitrate in place of silver nitrate to reduce the generation of hazardous and mixed waste at TA-55 (TWCP-3548/N-1 and TWCP-3566/N-33).

Two dissolution processes were designed to remove excess silica from either solid residues during dissolution or from plutonium-bearing solutions after dissolution (TWCP-3567/N-34 and N-35). In both these processes, silica was removed from solutions prior to sending them to purification. One process involved the following steps: adjusting the acidity of the feed solution using nitric acid; distilling to concentrate the solution; oxidizing the plutonium to a valence state of +4 with hydrogen peroxide; heating the solution until the excess hydrogen peroxide is destroyed; and filtering the solution to remove the silica solids (TWCP-3567/N-34). The solution from this process went to anion exchange purification process. The second silica-removal process used a hydrofluorinator with a potassium hydroxide scrubber solution (TWCP-3567/N-35). The solution from this process was sent to the TA-50-1 RLWTF via the caustic waste line if the plutonium content was below the DL or to the lean residue ion exchange (LR) purification process if the content was above the DL. The filtered silica solids from both processes were re-dissolved if plutonium concentrations were above the DL or disposed to cement fixation (CF) if concentrations were below the DL.

Uranium-plutonium oxide mixtures were leached using nitric acid to preferentially dissolve the uranium (UPS) (TWCP-3566/N-19). Aluminum nitrate was added to the solution to complex any fluoride ion that might be present. The uranium-bearing filtrate was disposed to cement fixation (CF). The plutonium-bearing solids were sent to dissolution (ED, MPD, or SP) and then to either an anion-exchange process or the oxalate-precipitation process (OY) for purification.

A caustic (hydroxide) leach process has been used to pretreat electro-refining furnace scrapings from the Rocky Flats Plant and other residues high in chlorides. Chlorides were removed using sodium hydroxide, and the treated residues were then dissolved in nitric and hydrofluoric acid (TWCP-3566/N-26, N-26A, and N-30E). The filtered solids continued through the dissolution process. If the plutonium content in the solution was above the DL, the solution was refiltered (TWCP-3566/N-26). If the

plutonium content was below the DL, the caustic solution was disposed to the TA-50-1 RLWTF (TWCP-3566/N-26A).

Several dissolution processes involved the use of cascading dissolvers or dissolution pots (AL, AT, ED, MPD, OD, SC, SP) (TWCP-3548/N-1). The choice of dissolution equipment is based on the concentration of plutonium present in the feed material and the physical form of the feed material. Feed materials include ash, glovebox sweepings, ground slag or crucibles, oxides, residues, salts, and sand (TWCP-3566/N-23, N-24, N-25, and N-28; TWCP-3567/N-36, N-37, and N-37A).

For P/S code OD, the feed materials came from P/S codes PAF, IB, RB, and RBJ (TWCP-3568/N-81). The possible impurities in the feed materials consisted of cadmium, chromium, and/or lead. These metals would be contained in the filtrate, which was sent to the ion exchange processes for further purification. The debris waste generated from this process is not expected to contain cadmium, chromium, or lead above the regulatory limits because the dissolution involved strong acids (any soluble metals should be in the filtrate). However, without analytical data or other acceptable information confirming that the concentrations of these hazardous constituents are below the regulatory levels, the applicable EPA HWNs (D006, D007, and D008) are assigned pending additional information (TWCP-3568/N-83).

Cascading dissolvers consist of a series of heated columns into which the standard leach solution is introduced along with aluminum nitrate in some instances. Air is bubbled through the columns to promote mixing of the solutions and to keep particles in suspension. Solution from the first column overflows to the second column and so on (TWCP-3548/N-1; TWCP-3566/N-23, N-24, N-24A, and N-25; TWCP-3567/N-36). After dissolution in the dissolvers, the solutions are filtered and then sent to purification. The filtered solids are sent to other dissolution processes if plutonium concentrations are above the DL, or to cement fixation (CF) or disposed as debris waste if concentrations are below the DL.

Another feed material for the nitrate operations is hydroxide filtrate cakes from the chloride operations (TWCP-3548/N-1). This material is dissolved using the standard leach solution, which is then filtered (CD, HCD, HD) (TWCP-3566/N-32). Aluminum nitrate is added to the solution and the solution is re-filtered. The filtrate is sent to purification. Filtered solids are re-dissolved if plutonium concentrations are above the DL, or disposed to cement fixation (CF) if concentrations are below the DL. From 1985 to 1994, the hydroxide cakes from the chloride operations contained cadmium, chromium, lead, mercury, and silver (TWCP-3567/N-39 and N-40). After 1994, silver is not present in the cakes. The debris waste generated from the dissolution of hydroxide

cakes from the chloride operations is not expected to contain the listed metals above the regulatory limit. However, without analytical data or other acceptable information confirming that the concentrations of these hazardous constituents are below the regulatory levels, the applicable D-codes (D006, D007, D008, D009, and D011) are assigned pending additional information (TWCP-3568/N-83).

In overview, filtered solids from the dissolution step are re-dissolved until plutonium concentrations are below the DL, then sent to cement fixation (CF); debris items are disposed after the plutonium contamination is removed from the surface by leaching; plutonium-bearing solutions are sent on to purification or to the metal preparation line (P/S code MP) (TWCP-3548/N-1; TWCP-3566/N-21 through N-33; TWCP-3567/N-34 through N-36).

Chemicals used in the dissolution steps are listed in Table 5 in Section 3.6.3. Chemicals used in these steps that are covered by 40 CFR Part 261, including Appendix VIII of those regulations, are (1) ascorbic, formic, hydrochloric, hydrofluoric, nitric, oxalic, and sulfuric acid; (2) potassium and sodium hydroxide, (3) hydrogen peroxide (an oxidizer), and (4) mercuric and silver nitrate (TWCP-3566/N-21, N-22, N-23, N-24, N-25, N-28, N-29, N-30B, N-30C, N-30D, N-30E, N-30F, N-31, N-32, and N-33; TWCP-3567/N-34, N-35, N-36, N-37, and N-37A; TWCP-3568/N-81). EPA HWNs D001 and D002 do not apply to the solid wastes despite the use of acids, bases and an oxidizing solution in these processes because there is no free liquid in these wastes. Mercuric nitrate was used as a catalyst in P/S code VP1, which is accordingly assigned the EPA HWN for mercury, D009. Silver nitrate was used in P/S code AT and CPOD, which are therefore assigned the EPA HWN for silver, D011.

Additional EPA HWNs apply to most of these P/S codes as a result of the presence of regulated chemicals in the material feed (see Table 1 in Section 3.6) or as a result of contamination introduced from the use of laboratory equipment or supplies or from glovebox maintenance operations (discussed in section 4.2). For example, RCRA-regulated hazardous constituents introduced to the nitrate operation at the dissolution step from hydroxide filtrate cakes include cadmium, chromium, lead, mercury, and silver (TWCP-3567/N-39, N-40). Leaded gloves were discarded as described in section 3.6.1.

NOTE: For some of these P/S codes, no formal procedures could be found and the necessary information was extracted from process flow diagrams and SME input. More detailed descriptions of such P/S codes that are included in this dissolution section are provided in section 3.5.6, as

follows: P/S codes AS, BAC, COD, COL, LC, LG1, LG2, MB, NL, NR, PS, PT, SSD, US, US2, VC, VP1, and ZD.

3.5.3 Purification and Oxide Conversion (P/S codes AO, AP, CC, CH, DF, DS, FA, FC, HC, LR, OH, OY, PR, RB, RBJ, RCM, RFX, RR, SX, and VP3)

A peroxide precipitation process (PR) was used to achieve excellent separation of plutonium from the cationic impurities calcium, chromium, magnesium, cesium, cobalt, and aluminum, as well as americium (TWCP-3567/N-52). Peroxide was added to the oxide dissolution filtrate feed material to convert the plutonium to valence state (+4). Additional peroxide resulted in the precipitation of Pu_2O_7. The resulting peroxide filter cake was dissolved in nitric acid and the solution was sent to oxalate precipitation (OY). The filtrate solution from the peroxide precipitation was sent to hydroxide precipitation (OH), also known as the peroxide kill process.

Plutonium-bearing solutions generated in the dissolution step are directed to purification for plutonium recovery (TWCP-3548/N-1). Purification consists of both ion exchange and precipitation processes. There are three primary ion exchange processes based on the concentration of plutonium in solution: rich feed (RCM), dissolver solutions (DS), and lean residue (LR). After ion exchange, plutonium-bearing solutions are directed to oxide precipitation and then to an oxidation process. The oxidation process generates plutonium oxide, a stable form of plutonium suitable for storage or further processing into plutonium metal.

The ion exchange processes use resin-filled columns to collect plutonium (P/S codes DS, RCM, LR, RR, RFX) (TWCP-3548/N-1; TWCP-3567/N-41, N-42, N-43, N-44, N-46, N-47, and N-53). The pH of incoming solutions is adjusted with nitric acid and the plutonium is stabilized by changing the plutonium valence state to (+4) using hydrogen peroxide. Other chemicals used to adjust acidity or to "condition" incoming solutions to address the presence of fluoride, silica, metal impurities, or plutonium (+6) include: aluminum nitrate, ferrous ammonium sulfate, hydrogen peroxide, sodium hydroxide, sodium nitrite, sulfuric acid, and urea. Certain intermediate solutions used to condition the ion exchange feed, especially caustic solutions used to "kill" the peroxide, are filtered and then sent to the TA-50-1 RLWTF if they meet the TA-50-1 WAC.

If solutions high in americium are "conditioned" with hydrogen peroxide, an americium hydroxide precipitate forms when the solutions are dripped into sodium hydroxide to "kill" the peroxide (TWCP-3567/N-55). This precipitate is dissolved using nitric acid, sent

through an ion exchange column, and then sent on to the oxalate precipitation process to recover the americium and convert it to americium oxide (P/S codes AO, AP, FA, and SX).

Plutonium (+4) binds to the resin while impurities such as americium, uranium, and other metals flow through the columns (TWCP-3548/N-1; TWCP-3567/N-41, N-42, N-43, N-44, N-46, and N-47). The plutonium remains on the resin in the (+4) valence state until an eluting agent (hydroxylamine nitrate or 0.35-1.0 M nitric acid) is flowed through the columns. This releases purified plutonium in solution for further processing (i.e., precipitation and oxidation). The plutonium-poor solutions or effluents from the ion exchange columns are sent to the evaporator (EV) for re-concentration. Ion exchange resins are reconditioned using nitric acid; spent ion exchange resins are periodically sent to cement fixation (CF) for disposal.

After ion exchange, plutonium-bearing solutions are sent on to a precipitation process (P/S codes OY and OH) to convert the plutonium solution to plutonium oxide (TWCP-3548/N-1; TWCP-3567/N-41, N-42, N-43, N-47, N-48, N-50, N-51, N-51A, and N-53; TWCP-3568/N-79). This process involves the addition of oxalic acid to form a plutonium oxalate precipitate. The precipitate is then filtered out of the solution, washed, dried, and converted to an oxide using calcination, heat lamps, or hot plates. The plutonium solutions are either sent to the evaporator (EV) for volume reduction or, for a short time, were treated with hydroxide precipitation.

Hydroxide cakes from the chloride operations, which started in 1985 (TWCP-3567/N-40), are introduced to the nitrate operations in the dissolution step (TWCP-3567/N-39). The outputs from the dissolution of chloride operations hydroxide cakes are sent to P/S code LR or DS. Therefore, RCRA-regulated hazardous constituents associated with the feed materials from the chloride operations may carry through to P/S codes DS and LR (TWCP-3567/N-38). The hazardous metal constituents contained in hydroxide cakes from 1982 (based on the start of the chloride operations) until 1994, include cadmium, chromium, lead, mercury, and silver (TWCP-3567/N-40). Beginning in 1994, only cadmium, chromium, lead, and mercury are expected to be present. These metals may be present above the regulatory limits in the waste streams generated by P/S codes DS and LR. Therefore, the EPA HWNs D006, D007, D008, D009, and D011 are assigned to the waste from 1982 to 1994; and D006, D007, D008, and D009 are assigned from 1994 forward.

In overview, plutonium oxide from the purification step is transferred to the vault for storage or to the metal preparation line; solutions are sent to

the evaporator for re-concentration and then returned to ion exchange or sent to P/S codes CF or HP for immobilization in cement. The distillates are sent to the RLWTF if they meet the TA-50 WAC. Spent ion exchange resins are sent to cement fixation (CF) (TWCP-3567/N-41 through N-53).

Chemicals used in the dissolution steps are listed in Table 5 in Section 3.6.3. Chemicals used in these steps that are covered by 40 CFR Part 261, including Appendix VIII of those regulations, are (1) hydrofluoric, nitric, and oxalic acid; (2) sodium hydroxide, and (3) hydrogen peroxide (an oxidizer)(TWCP-3567/N-41 through N-47, N-50, N-51, N-53, N-54, and N-55; TWCP-3568/N-81). EPA HWNs D001 and D002 do not apply to the solid wastes despite the use of acids, bases and an oxidizing solution in these processes because there is no free liquid in these wastes.

However, EPA HWNs apply to most of these P/S codes as a result of the presence of regulated chemicals in the material feed (see Table 1 in Section 3.6) or as a result of contamination introduced from the use of laboratory equipment or supplies or from glovebox maintenance operations (discussed in section 4.2). For example, RCRA-regulated hazardous constituents introduced to P/S codes DS and LR with the hydroxide filtrate cakes include cadmium (D006), chromium (D007), lead (D008), mercury (D009), and silver (D011) (TWCP-3567/N-39 and N-40). Similarly, plutonium oxide from the vault may have been roasted and blended in P/S codes RB and RBJ to provide a more homogeneous feed for the metal preparation line (P/S code MP); these oxides may have contained cadmium (D006), chromium (D007), and lead (D008) (TWCP-3567/N-56, N-57, N-57A, and N-57B). Leaded gloves were discarded as described in section 3.6.1.

NOTE: For some of these P/S codes, no formal procedures could be found and the necessary information was extracted from process flow diagrams and SME input. More detailed descriptions of such P/S codes that are included in this purification section are provided in section 3.5.6, as follows: P/S codes AO, AP, CC, CH, DF, FA, FC, HC, and VP3.

3.5.4 Evaporator (P/S code EV)

Plutonium-poor ion exchange effluents and oxalate precipitation filtrates are sent to the evaporators to re-concentrate plutonium, if possible, and reduce the volume of disposed waste (TWCP-3548/N-1, TWCP-3568/ N-61 through N-65). General facility maintenance solutions (e.g., wet vacuum water, mop water, chiller water) are also sent to the evaporator if they do not meet the TA-50-1 WAC (TWCP-3568/N-76). The wet

vacuum water and chilled circulating water are contaminated with nitric acid, hydrochloric acid, or caustic solutions having the same characteristics as those sent to the TA-50-1 RLWTF, only richer in nuclear material content (e.g., diluted processing solutions) (TWCP-3568/N-82). The mop water is taken back into the evaporator only if it has a significant nuclear material content, which means that it originated in the processing solutions before escaping the confines of the glovebox system. There has never been an indication that spilled materials included a solvent.

Plutonium-poor solutions are collected in storage tanks and sent to the evaporators in batches of up to 600 liters (TWCP-3548/N-1; TWCP-3568/N-61 through N-65). These solution batches are then concentrated to approximately 25-liter volumes called "bottoms." As the bottoms cool, salts precipitate out and settle on the bottom of cooling trays. After cooling, the bottoms are sent back to ion exchange if plutonium concentrations are above the DL or to cement fixation (CF) if concentrations are below the DL. Attempts are made to re-dissolve settled salts, but if this is not possible, the bottoms are filtered and the salts are sent to dissolution if plutonium concentrations are above the DL or disposed as uncemented (debris) waste or sent to cement fixation (CF) if concentrations are below the DL. Nitric acid is used in the evaporator process to wash nitrate salts having a plutonium concentration above the DL. Except for approximately one year in 1990/1991, no other chemicals are used in the evaporator step in addition to those found in the ion exchange effluents and oxalate precipitation filtrates waste (TWCP-3548/N-1; TWCP-3558/N-61 through N-65). In the 1990/1991 timeframe, formic acid was added to the evaporator as an experiment to decrease the nitric acid concentration (by converting nitrate to nitrogen oxides) (TWCP-3568/N-76).

Chemicals used in the evaporator that are covered by 40 CFR Part 261, including Appendix VIII of those regulations, are nitric and formic acid. However, EPA HWNs D001 and D002 do not apply to the solid wastes from the evaporator because there is no free liquid in these wastes.

However, EPA HWNs apply to waste from P/S code EV as a result of the presence of regulated chemicals in the evaporator feed material. Hydroxide cakes from chloride operations, which started in 1982 (TWCP-3567/N-40), are introduced to nitrate operations in the dissolution step (TWCP-3567/N-39). Therefore, RCRA-regulated hazardous constituents associated with the feed materials from chloride operations may carry through from dissolution to P/S codes DS and LR to the evaporator (TWCP-3567/N-38). The hazardous constituents contained in the hydroxide cakes from 1982 (based on the start of the chloride operations) until 1994 include cadmium (D006), chromium

(D007), lead (D008), mercury (D009), and silver (D011) (TWCP-3567/N-39 and N-40). After 1994, only cadmium, chromium, lead, and mercury are expected to be present. Analysis of evaporator bottoms at TA-55 and statistical evaluation of analytical results using control charts have also shown that chromium, lead and mercury are above regulatory limits in this waste (TWCP-3568/N-66).

3.5.5 Cement Fixation (P/S codes CF, HP, IA)

In the cement fixation step, various wastes with plutonium concentrations below the DL from nitrate and other operations at TA-55 are collected and immobilized in cement for interim and long-term storage (TWCP-3548/N-1; TWCP-3568/N-67 through N-74). Cement fixation has been carried out in 55-gallon drums under P/S code CF, and in one-gallon cans under P/S code HP (TWCP-3568/N-72).

The cement fixation process came into existence in 1980 under what became P/S code HP. The following information was provided by a SME (TWCP-3568/N-81) because documented procedures for this process could not be identified. Wastes sent to P/S code HP for disposal in one-gallon cans included: americium oxide; calcium chloride salts from direct oxide reduction, pyroredox, and salt stripping; chloride solutions; evaporator bottoms; filter aid; glovebox sweepings; graphite powder; high efficiency particulate air (HEPA) filter media; high-fired ash; leached ash residues; leached particulate solids (e.g., sand, slag, crucible parts); passivated uranium carbide; plutonium/thorium fluoride filter cakes; plutonium/thorium hydroxide filter cakes; pump oils; silica solids; spent ion exchange resins; trioctyl phosphine oxide and iodine in kerosene; uranium oxide; and uranium solutions (TWCP-3568/N-72).

Since 1981, the primary feed to this process was the evaporator bottoms solution. Evaporator bottoms were treated by hydroxide precipitation and filtered. The cakes would dry only very slowly so the wet cakes were rolled in plastic bags with Portland cement powder or were stirred in one-gallon cans with Portland cement to make them set. In 1981, hydroxide precipitation was discontinued and the neutralized bottoms solutions were stirred directly with Portland cement powder in one-gallon cans. In January 1983, Gypsum (calcium sulfate) cement powder (also known as Envirostone cement) replaced the Portland cement powder. The evaporator bottoms solution was adjusted to a pH of about 3 for Gypsum cement or to a basic pH (7-10) for Portland cement. The cement powder was then mixed into the solution. Any particulate matter was added during the stirring operations.

Waste oil/organic solutions set up in cement were restricted to TRU vacuum pump oils and mixtures of trioctyl phosphine oxide (TOPO) and iodine dissolved in kerosene. Some of the miscellaneous solutions sent

for cement fixation included analytical chemistry solution residues that contained RCRA-regulated organics or heavy metals. Oils and organic liquids are emulsified by the addition of a surfactant before they are mixed with the neutralized evaporator bottom solutions (TWCP-3568/N-74). The miscellaneous solutions were treated in a manner much like the evaporator bottoms solution.

The discard of impure americium oxide from P/S code AO (section 3.5.6.1) was mostly accomplished by stirring it into a one-gallon can of evaporator bottom cement paste (up to 140 g americium/can). When all cement was being stirred in one-gallon cans, the americium-containing can was placed in the center of the middle layer of cans in a drum to provide maximum shielding. When storage of the impure americium hydroxide cakes in P/S code AO became a radiation exposure problem, a significant portion of the stored material was placed in P/S code IA until the material could be immobilized in cement for disposal. P/S code IA was active from April 1986 to December 1988. It did not involve any type of processing and, therefore, did not generate any waste.

In July 1988, the cementation process was changed from stirring the cement in one-gallon cans to stirring cement monoliths in 55-gallon drums attached to the glovebox (under P/S code CF). Although P/S code HP is still open, it has not been used since July 1988.

NOTE: The strategy proposed for shielding americium-containing cans, after the operation converted to 55-gallon drum monoliths, was to push the one-gallon americium-containing can down into the wet cement paste in the drum. However, the SME did not believe that it was ever attempted.

P/S code CF began in August 1988 and continues to the present time. Wastes collected for disposal in 55-gallon drums include aqueous and organic liquids from analytical chemistry; evaporator bottoms and evaporator salts; fine particulate materials, such as salts filtered from solutions, leached filter paper residues, and ash; oils, organic petroleum-based liquids, and spent ion exchange resins. As was the case for P/S code HP, the primary feed to this process has been the evaporator bottoms solutions. In 1996, the cementation process again converted from Gypsum cement powder (last used in June 1996) back to Portland cement powder (reuse began in July 1996).

Chemicals used in the cement fixation step under P/S codes CF and HP include: cement accelerator, Gypsum cement, nitric acid (pH adjustment), organic liquid emulsifier (which acts as a surfactant), Portland cement, silicon defoamer, sodium citrate retarder, and sodium hydroxide (pH adjustment) (TWCP-3568/N-69, N-71, N-72, N-74).

Phthalate buffer solution for pH 4 and phosphate buffer solution for pH 7 were used in P/S code CF only. EPA HWNs D001 and D002 do not apply to the solid wastes from cement fixation as a result of these chemicals because there is no free liquid in these wastes.

Although RCRA-regulated organics and metals were not used in either of the two cement fixation processes, regulated chemicals were present in the materials sent to be immobilized in cement. Therefore, the waste streams generated by these processes may contain RCRA-regulated solvents and metals above the regulatory limits.

- Analysis of evaporator bottoms at TA-55 between 1994 and 1998 and statistical evaluation of analytical results using control charts have also shown that chromium (D007), lead (D008) and mercury (D009) are above the regulatory limit for this waste (TWCP-3568/N-66).

- Hydroxide cakes from the chloride operations, which started in 1982 (TWCP-3567/N-40), are introduced to the nitrate operations in the dissolution step (TWCP-3567/N-39). Therefore, RCRA-regulated hazardous constituents associated with the feed materials from the chloride operations as well as those derived from other nitrate dissolution processes may carry through to cement fixation (TWCP-3567/N-38). The hazardous constituents contained in the hydroxide cakes from chloride operations include cadmium (D006), chromium (D007), lead (D008), mercury (D009), and silver (D011) (TWCP-3567/N-39 and N-40). The use of silver in chloride operations ended at the end of 1993. After 1993, heavy metal analyses have been conducted on the solutions, with chromium, lead, cadmium, and mercury being detected at levels above the regulatory levels at times.

- Gypsum cement was found to leach heavy metals above regulatory levels, but the Portland cement does not (N-66/TWCP-3568). Thus, the chromium, lead and mercury are no longer considered hazardous after 1995. In addition, arsenic, barium, cadmium, selenium and silver concentrations were all below the regulatory threshold limits for these metals.

- The presence of RCRA constituents in waste analytical chemistry solutions was noted in the data packages beginning in 1990. The RCRA-regulated organic chemicals found in these solutions included carbon tetrachloride (D019), n-butanol (F003), acetone (F003), methanol (F003), tetrachloroethylene (D039, F003), xylene (F003), methylene chloride (F002), chloroform (D022), and chlorobenzene (D021).

Based on this information, the following EPA HWNs apply to P/S codes CF and HP (until cessation of this process in August 1988):

- P/S codes CF and HP. Applicable EPA HWNs for organic chemicals are F002, F003, D019 (carbon tetrachloride); D021 (chlorobenzene), D022 (chloroform); and D039 (tetrachloroethylene).

- P/S code HP (from 1980 to December 1982): Applicable EPA HWNs for heavy metals for waste immobilized in Portland cement are D007 (chromium), D008 (lead), and D009 (mercury).

- P/S codes HP (from January 1983 to July 1988) and CF (from August 1988 to July 1996): Applicable EPA HWNs for heavy metals for waste immobilized in Gypsum cement are D007 (chromium), D008 (lead), D009 (mercury), and D011 (silver, until its use ended in 1992).

- P/S code CF (from July 1996 to the present time): Applicable EPA HWNs for heavy metals for waste immobilized in Portland cement are D007 (chromium), D008 (lead), and D009 (mercury). However, immobilization with Portland cement is an approved treatment and the final waste form is no longer hazardous.

Because P/S code IA simply held excess americium hydroxide cakes from P/S code AO, the EPA HWNs applicable to P/S code AO also apply to P/S code IA. These EPA HWNs are D007, D008, D009, and D011.

3.5.6 Additional P/S codes

Other P/S codes included in the Nitrate Operations, for which no procedures were found during this AK documentation review, are described in this section. The information for these P/S codes was derived from process flow diagrams and SME input (TWCP-3568/N-77 and N-81). The timeframe and EPA HWNs associated with each P/S code are shown on the timelines included as Attachment 3. The inputs, outputs, and applicable EPA HWNs are provided in Attachment 4.

3.5.6.1 Americium Processing Calcination (AO)

This process was active from 1979 to 1984 and from 1986 to 1988 and went through three variations. The process was inactive from 1984 to 1986. From 1979 to 1984, this process received high purity americium oxalate cakes from P/S code FA. These cakes were calcined in a furnace resulting in a pure americium oxide product, which went to the vault and eventually most of this supply was sent to Oak Ridge

National Laboratory for distribution to manufacturers to be used for smoke detectors, well logging, and anti-static brushes. Beginning in February 1986 until about 1987, this process received oxalate cakes from P/S code PS. This impure americium oxalate was calcined to the oxide and sent to the vault as a reserve that could be converted to high purity oxide if a need arose. Finally, from April 1986 to December 1988, impure americium hydroxide cakes were received from chloride ion exchange processing of molten salt extraction salts. Those cakes were calcined and stored in P/S code AO and IA until they were ready for disposal by cement fixation (CF).

RCRA-regulated organic solvents were not used in any variation of this process and were not present in the feed materials; therefore, there would not be any RCRA-regulated solvents in the waste streams generated by this process. RCRA-regulated metals also were not used in this process and were not introduced by the feed materials from P/S codes FA and PS; therefore, there would not be any RCRA-regulated metals in the waste streams generated from 1979 to June 1986. The presence of RCRA-regulated metals in the chloride operations, however, could carry over into this process. Therefore, waste generated from June 1986 to December 1988 may contain concentrations of cadmium, chromium, lead, mercury, and silver above the regulatory level (TWCP-3567/N-39 and N-40), resulting in EPA HWNs D006, D007, D008, D009, and D011 being assigned. The waste stream generated by this process consisted of the usual glovebox waste items.

3.5.6.2 Americium Purification (AP)

This process was performed from 1979 to June 1986, with a period of inactivity from 1984 to early 1986. The nitric acid concentration in americium solutions from P/S code SX was adjusted to 7 molar and passed through an ion exchange column. The plutonium (+4) would bind to the ion exchange resin and the americium (+3) would pass through the column, resulting in a purified americium solution. At the conclusion of the run, the plutonium was eluted off the column by washing the column with 1 molar nitric acid, and the plutonium solution collected separately. The plutonium solution was then sent to one of the plutonium ion exchange columns for recovery of the plutonium.

RCRA-regulated organic solvents and metals were not used in this process and were not present in the feed material from P/S code SX; therefore, there would not be any RCRA-regulated solvents or metals in the waste streams generated by this process. Chemicals, such as hydroxylamine nitrate, were used to adjust the valence of the plutonium. The waste stream generated by this process consisted of the usual glovebox waste items, such as glass vessels, HEPA filters, and rags. Leaded gloves were disposed of as described in Section 3.6.1.

3.5.6.3 Anode Heel Dissolution (AS)

This process was performed from 1980 to November 1988. The plutonium oxide generated as the result of burning anode heels in P/S code BU was dissolved in a nitric acid/hydrofluoric acid mixture or in calcium fluoride, and filtered to remove the nondissolving residues. These residues were dried and collected and sent after assay to P/S code SP for more rigorous dissolution. The filtrate was sent to the rich residue ion exchange column (RR) for purification.

Although RCRA-regulated organic solvents and metals were not used in this process, residual RCRA-regulated heavy metals present in the electrorefining step were concentrated in the anode heels. Therefore, any RCRA-regulated metals in the anode heel feed could also be present in the waste generated by this process. These are cadmium (D006), chromium (D007), lead (D008), and silver (D011). The waste generated by this process includes glassware, plastic filter boats, cleaning rags, HEPA filters, metal cans, and brushes. Leaded gloves were disposed of as described in Section 3.6.1.

3.5.6.4 Bacterial Decomposition of Cellulose Items (BAC)

This process was performed from mid-1995 to mid-1996 and was an alternative to thermal decomposition. The process involved the decomposition of cellulose rags using a living organism to digest the cellulose to glucose and other byproducts. Cheesecloth rags, bacteria, and water were added to a flask and allowed to sit while the bacteria digested the rags. The resulting solution was sent to the lean residue ion exchange (LR).

RCRA-regulated organics and metals were not used in this process and were not introduced by the feed materials;

therefore, there would not be any RCRA-regulated solvents or metals in the waste streams generated by this process.

3.5.6.5 P/S code BF

Activities under this P/S code were nearly identical to those under P/S code BU because the feed was also anode heel metal. Heels were burned under P/S code BF between September 1985 and November 1986 came from the electrorefining step (P/S codes ER or SS) at TA-55. Although RCRA-regulated organic solvents and metals were not used in this process, residual RCRA-regulated heavy metals present in the electrorefining step were concentrated in the anode heels. Therefore, any RCRA-regulated metals in the anode heel feed could also be present in the waste generated by this process. These are cadmium (D006), chromium (D007), lead (D008), and silver (D011). The waste generated by this process includes glassware, plastic filter boats, cleaning rags, HEPA filters, metal cans, and brushes. Leaded gloves were disposed of as described in Section 3.6.1.

3.5.6.6 Blending (BL)

This process was performed from 1979 to May 1988. Various lots of plutonium oxide in the vault or in-house P/S codes were fed into this process. Each container of oxide was weighed, opened, and screened to remove oversized material. The oversized material was ground with a mortar and pestle and rescreened. The individual contents were combined and blended in a V-blender to make a homogeneous lot of feed oxide that was sent as feed to the roasting and blending process (RB).

This is a physical process in which no additional materials or chemicals are used. RCRA-regulated organic solvents and metals were not used in the process and were not introduced with the feed material; therefore, there would not be any RCRA-regulated solvents or metals in the waste streams generated by this process. The waste generated consisted of typical glovebox waste items, such as HEPA filters, glass, ceramic boats and plates, cleaning rags, brushes, metal containers and equipment, and plastics. Leaded gloves were disposed of as described in Section 3.6.1.

3.5.6.7 Button Burning (BU)

This process was performed from approximately 1979 to 1986. Metal buttons were received from offsite DOE facilities (usually Hanford, but possibly Rocky Flats as well). The metal buttons were burned in a furnace at about 600°C. The oxide produced from six buttons was combined and blended to make up a uniform feed lot for the anode heel dissolution process (AS).

Although RCRA-regulated organic solvents and metals were not used in this process, residual RCRA-regulated heavy metals present in the electrorefining step were concentrated in the anode heels. Therefore, any RCRA-regulated metals in the anode heel feed could also be present in the waste generated by this process. These are cadmium (D006), chromium (D007), lead (D008), and silver (D011). The waste generated by this process includes glassware, plastic filter boats, cleaning rags, HEPA filters, metal cans, and brushes. Leaded gloves were disposed of as described in Section 3.6.1.

3.5.6.8 Calcination (CC)

This process was performed from 1979 to November 1988. Plutonium oxalate cakes from the oxalate precipitation process (OY) were calcined by heating in air in a furnace to form pure plutonium oxide. The oxide became feed for the oxide reduction process.

This was a physical process, not involving any chemical reagents. RCRA-regulated organic compounds and metals were not used in this process and were not introduced by the feed materials. The oxalate cakes were of high purity. Therefore, the waste generated from this process would not contain any RCRA-regulated organic compounds or metals. The waste generated from this process consists of the usual glovebox waste items plus metal tools, containers, and equipment; ceramic furnace elements; rags; and brushes.

3.5.6.9 Characterization (CH)

This process was performed from 1979 to February 1989 and received samples of blended lots of oxide from the blending process (BL). Portions of the samples were weighed out for four analyses to demonstrate that the oxide powders met the acceptance criteria for preparation of driver fuel for the Fast

Flux Test Facility (FFTF). The Loss on Ignition Analysis involved heating the powder and measuring the weight loss from driving off adsorbed water and gases. The Surface Area Analysis involved absorption of nitrogen gas on the oxide at liquid nitrogen temperature. The Particle Size Analysis measured the settling rate of oxide particles dispersed in a viscous, water-soluble liquid using the absorption of X-rays by the particles. The slurry was discarded to cement fixation (HP). Finally, some of the powder was pressed into pellets and sintered at 160 degrees C before measuring and weighing them for density. The pellets and oxide residues were packaged separately and sent to the vault as archives and eventually recycled. Oxide powders from other sources were also partially characterized many times. The process was used to make water-dampened plutonium oxide pucks for a criticality experiment and to test the reactivity of calcium nodules from pyrochemical operations.

RCRA-regulated organics and metals were not used in this process and were not introduced by the feed materials. The oxide samples were high-purity materials. Therefore, the waste generated from this process would not contain any RCRA-regulated organics or metals. The waste generated by this process included the usual glovebox waste of HEPA filters, window glass and glass containers, metal containers and tools, brushes, and cleaning rags. Leaded gloves were disposed of as described in Section 3.6.1.

3.5.6.10 Chlorinated Oxide Dissolution (COD)

This process was performed from August 31, 1988 to July 1991. The front-end of this process looked identical to the chlorinated oxide leach process (COL). Chloride pyrochemical salts were dissolved in sodium hydroxide solution and filtered. The filtrate was discarded into the caustic waste line to the TA-50-1 RLWTF or immobilized in cement (CF). The dried plutonium oxide cake was dissolved in a nitric acid-hydrofluoric acid mixture as part of this process, or sent to a cascade dissolver (ED). The solution from the acid dissolution step was filtered and the solids were returned to the dissolution step. The solution volume was reduced by distillation. The distillate was processed in one of the ion exchange columns. The concentrated solution was re-filtered and all of the filter residues were sent to a cascade dissolver (ED) or to the filter residues dissolution process

(SP). The filtrate was sent to one of the ion exchange columns for recovery.

RCRA-regulated organics and metals were not used in this process and were not introduced with the feed materials. The pyrochemical salts should be of high purity. Therefore, the waste generated from this process would not contain any RCRA-regulated organics or metals.

3.5.6.11 Chlorinated Oxide Leach (COL)

This process was performed from June 13, 1989 to June 1991. Chlorinated oxides or plutonium oxide contained in chloride-based pyrochemical salts from Rocky Flats were subjected to leaching with sodium hydroxide. The chloride salts would dissolve in the solution that would then be filtered. If the filtrate met the TA-50-1 WAC, it would be sent into the process caustic waste line at the TA-50-1 RLWTF. If not, it would be sent to cement fixation (CF). The cake containing the plutonium oxide would be dried and sent to the cascade dissolver (ED) or to chlorinated oxide dissolution (COD).

RCRA-regulated organics were not used in this process and were not introduced with the feed materials. RCRA-regulated metals also were not used in this process. However, the Rocky Flats salts that fed this process would contain any barium present in their electrorefining salts. Barium is not expected to be present above the regulatory limits in the waste generated by this process; however, without analytical results or other acceptable information to support this, the EPA HWN for barium (D005) is assigned to the liquid waste sent to cement fixation (CF) (TWCP-3568/N-83). The waste generated by this process consists of the usual glovebox waste, such as glassware, plastic filter boats and tubing, and rags. Leaded gloves were disposed of as described in Section 3.6.1.

3.5.6.12 DS Furnace and Oxide Prep (DF)

This process was performed from 1979 to April 1990. The wet plutonium oxalate cake from the ion exchange process (DS) was placed in a metal can and heated in air in a furnace to dry the cake and then decompose the oxalate to an oxide product. The oxide product was returned to the ion exchange process (DS) prior to being sent to the vault.

RCRA-regulated organics and metals were not used in this process and were not introduced with the feed materials. The oxalate cakes were of high-purity. Therefore, the waste generated from this process would not contain any RCRA-regulated organics or metals. The waste generated by this process consists of the usual glovebox waste items plus metal tools, containers, and equipment; ceramic furnace elements; rags; and brushes.

3.5.6.13 Dry Processing (DP)

This process was performed from 1979 to December 1985 and was the front-end treatment of polycubes, which were blocks of polystyrene with plutonium oxide embedded in them (TWCP-4100). The Hanford polycubes were skinned to remove the uncontaminated surface and perhaps some of the oxide embedded beneath the surface. If the skins met the DL, they would be discarded as plastic waste. If not, the skins would be sent to polycube processing (VP2) along with the bulk of the cube material. In preparation for that treatment, the cubes would be crushed and milled into small fragments.

This is a physical process. RCRA-regulated organics and metals were not used in this process and were not introduced with the feed materials; therefore, the waste generated from this process would not contain any RCRA-regulated organics or metals. The waste generated by this process consists of the usual glovebox waste items plus plastic, metal tools and equipment, rags, and brushes.

3.5.6.14 Experimental Thermal Decomposition (ETD)

This process has been performed from June 4, 1996 to the present. Combustible residues from various P/S codes are heated in a furnace under argon until the organic matrix is volatilized and decomposed, and a carbon-rich residue containing plutonium oxide and impurities remain. This residue is then sent to a rotary calciner (RC) to remove the carbon.

RCRA-regulated organics and metals are not used in this process. Organics may be introduced with the feed materials depending upon the P/S codes from which the materials come; however, any solvents are dissipated during the heating process. The feed materials may initially contain low levels of RCRA-regulated metals, but the thermal decomposition process drives off most of the mass, thereby

concentrating the non-volatile heavy metals. Therefore, the waste generated from this process may contain RCRA-regulated metals (but no organics). The waste generated by this process consists of the usual glovebox waste items plus metal tools, containers, and equipment; rags; brushes; and a water scrub solution from scrubbing the off-gas.

3.5.6.15 Americium Processing (FA)

This process was performed from 1979 to 1984. The 7 molar nitric acid solution from the americium purification process (AP) was distilled to reduce volume, and the acidity was adjusted to a low concentration of approximately one molar prior to oxalate precipitation in P/S code AO. The oxalate filtrate was sent to one of the hydroxide precipitation processes, such as P/S code VP3.

RCRA-regulated organics and metals were not used in this process. RCRA-regulated organics also were not introduced with the feed materials. Therefore, the waste generated from this process would not contain any RCRA-regulated solvents. Any RCRA-regulated metals present as impurities in the feed materials would be contained in the oxalate filtrate sent to a hydroxide precipitation process. However, the process description for P/S code AP does not indicate the presence of metals above the regulatory limit. The waste generated by this process consists of glass vessels, sintered glass frits, HEPA filters, rags, and other glovebox waste discarded as TRU solid waste. Because this is predominantly americium, waste materials were always discarded. Leaded gloves were disposed of as described in Section 3.6.1.

3.5.6.16 Canning (FC)

This process has been run from 1979 to the present. Plutonium oxide coming out of the blending process (BL) for storage in the vault is weighed into a food pack can (approximately 1 kg of oxide per can) and a lid is placed on the can in the canning operation. The can is wiped down with a water-dampened rag and passed out into a hand-held plastic bag in a hood. The plastic bag is sealed with vinyl tape and the unit is canned into a second larger food pack can that is entirely uncontaminated, for storage.

This is a physical process. RCRA-regulated organics and metals are not used in this process and are not introduced with the feed materials. The feed material is high-purity

plutonium oxide. Therefore, the waste generated by this process would not contain any RCRA-regulated solvents or metals. The waste generated by this process includes typical glovebox waste, such as HEPA filters and glass windows, as well as rags and stainless steel tools, cans, and equipment. Any wastewater generated by this process is sent to the ion exchange processes. Leaded gloves were disposed of as described in Section 3.6.1 until 1992, when this waste began to be segregated and disposed of as RCRA-regulated waste.

3.5.6.17 Cement to Drum (FX)

This process was performed from 1980 to July 1988. During the time that all cement was stirred in a one-gallon can (HP), the cans were initially bagged out a few cans at a time in a polyvinyl chloride (PVC) plastic bag and placed in a drum as they could best be fitted in. Eventually, a drum-out port was dedicated to this purpose. A 26-lb bag attached to a glovebox would be allowed to fit down into a drum. The one-gallon can would be stacked inside the bag in the drum, seven cans to a layer with five layers, for a total of 35 cans contained inside one bagout bag. No processing of materials was performed in this process.

This is a packaging process. RCRA-regulated organics and metals were not used in this process. Any applicable RCRA codes based on the feed materials are assigned to the cement fixation (CF and HP). The waste generated by this process was the usual glovebox waste, including large amounts of plastic. Leaded gloves were disposed of as described in Section 3.6.1.

3.5.6.18 Calcination (HC)

This process was performed from 1979 to August 1989. Plutonium oxalate cakes from P/S code OY were first calcined in air up to 700 degrees C. Water vapor was then passed through the cakes as it was heated to 850–900 degrees C to remove any fluoride impurity from the oxide. This prevented fluoride-catalyzed low temperature sintering in the oxide product.

RCRA-regulated organics and metals are not used in this process and are not introduced with the feed materials. The feed materials (oxalate cakes) are of high purity. Therefore, the waste generated by this process would not contain any RCRA-regulated solvents or metals. This process generates

the usual glovebox waste, plus metal tools, containers, and equipment; ceramic furnace elements; rags; and brushes.

3.5.6.19 High Gradient Magnetic Separation (HGMS)

This process has been performed from May 10, 1994 to the present. This P/S code is very similar to P/S codes GMS, MAG, and MAS. In this process, a steel mesh placed in a magnetic field becomes a magnetic attractor for plutonium particles of less than 50 microns. The particles are removed from slurries of soil and clays in water. This method reduces the quantity of soil that must be treated to remove the plutonium. The soil is first screened to separate the particles that are larger than 53 microns and cannot be separated in this process. The less than 53-micron fraction is slurried in water and passed around the magnet. The lean fraction is discarded as waste in cement fixation (CF) or sent to storage if the plutonium concentration is above the DL. The plutonium-rich fraction is stored until can be taken into a dissolution process. The slurry is filtered and the water is reused.

RCRA-regulated organics and metals are not used in this process but are introduced with the feed materials consisting of ash and miscellaneous materials contaminated with D006, D007, D008, D009, and D011. The waste generated by this process includes the usual glovebox waste plus metal screens and tools, rags, brushes, and containers.

3.5.6.20 Hanford Reservation Materials (HRA)

HRA refers to process residues sent from Hanford Reservation to TA-55 for plutonium recovery (TWCP-5371). This material was sent through nitrate operations but waste from processing it was tracked by the source code (HRA) instead of the P/S code in which the waste was generated. To be conservative, all EPA HWNs that are applicable to P/S codes in nitrate operations (other than the cementation processes CF and HP) are also applied to wastes from HRA. These EPA HWNs are D005, D006, D007, D008, D009, and D011.

NOTE: Because this code is not a process, there is no timeline associated with it in Attachment 3.

3.5.6.21 Impure Americium Holding for Discard (IA)

This P/S code was active from April 1986 to December 1988. When storage of the impure americium hydroxide cakes in P/S code AO became a radiation exposure problem, a significant portion of the stored material was placed in P/S code IA until the material could be fixed in cement for disposal. This P/S code did not involve any type of processing and, therefore, did not generate any waste.

Because this P/S code simply held excess americium hydroxide cakes from P/S code AO, the EPA HWNs applicable to P/S code AO apply to P/S code IA. These EPA HWNs include D006, D007, D008, D009, and D011.

3.5.6.22 Uranium/Plutonium Processing Nitrate Hydrofluoric Dissolution (LC)

This process was active from August 12, 1985 to August 1987. Plutonium oxides from P/S codes US (later renamed US1) and US2 were dissolved in nitric acid and hydrofluoric acid, concentrated by distillation, and filtered. The distillate solution was sent to P/S code EV. Any filter residues were calcined and recycled into the dissolution process. The uranium-plutonium solution was subjected to an oxalate precipitation with oxalic acid or sodium oxalate to precipitate the plutonium. The slurry was filtered and the plutonium oxalate was sent to a calcination process. The uranium nitrate solution was cemented in P/S code HP.

RCRA-regulated organics and metals were not used in this process and were not introduced with the feed materials; therefore there would not be any RCRA-regulated solvents or metals in the waste streams generated by this process. This process generated the usual glovebox waste, plus glassware, heating mantles, plastic filter boats, filter paper, rags, brushes, and metal tools and equipment.

3.5.6.23 Non Combustible Leach (LG1)

This process was active from October 1982 to December 1985. Metal, glass, and plastic from most PF-4 processes were leached with nitric acid to remove plutonium surface contamination from those matrices. The solution mixture was filtered to separate insoluble residues, which were dried and discarded as solid TRU waste. The plutonium nitrate-containing filtrate was sent to P/S code LR for

purification. This filtrate may have contained chromium, cadmium, and/or lead that was leached out from the stainless steel, shielding, or other metal feed materials (TWCP-3568/N-84).

RCRA-regulated organics were not used in this process and were not introduced with the feed materials (TWCP-3568/N-81). Therefore, there would not be any RCRA-regulated solvents in the waste streams generated by this process. The metal feed materials generally consisted of steel, stainless steel, aluminum, and copper. Any RCRA-regulated metals leached from these feed materials would be in the filtrate sent to P/S code LR. However, the leached materials may still contain concentrations of cadmium and/or lead that may leach out above the regulatory limit, resulting in the debris waste requiring the applicable EPA HWNs (D006, D008) (TWCP-3568/N-84). The chromium in stainless steel does not leach out above the regulatory limit. This process generated the usual glovebox waste, plus metal, glass, plastic, plastic filter boats, filter papers, glassware, rags, and brushes (TWCP-3568/N-81).

3.5.6.24 Hydroxide Cake Dissolution (LG2)

This process was active from October 1982 to December 1985. Hydroxide cakes from P/S codes CS and VP3 were dissolved in nitric acid and the solution was filtered. Any residue or filter cake was sent back to the dissolution step. The filtrate containing the plutonium nitrate was sent to P/S code LR for purification.

RCRA-regulated metals and organics were not used in this process; however, during the 1985 time period, certain metals could have been introduced with P/S code CS (from chloride operations), and mercury could have been introduced with the P/S code VP3 feed material. These metals would be found in the nitric acid filtrate, which fed into P/S code LR. Therefore, there would not be any RCRA-regulated solvents in the waste streams generated by this process. However, there may have been cadmium (D006), chromium (D007), mercury (D009), or silver (D011) in the feed material from 1984 through December 1985. This process generated the usual glovebox waste, plus glassware, metal tools and equipment, plastic filter boats, filter papers, rags, and brushes.

3.5.6.25 Nitric Dissolution of Molten Salts (MB)

This process was active from February 1986 to January 1987 and included both a hydrochloric acid dissolution path and a nitric acid dissolution path. The hydrochloric acid path began with refluxing the molten salt extraction (MSE) salts in hydrochloric acid and filtering the material. The solid residues were sent back into the dissolution process. The plutonium solution was sent to P/S code SE for purification. The distillate from the condenser tube was neutralized if it would meet the process caustic waste WAC for the TA-50-1 RLWTF. If it would not meet the WAC, the material was sent to either P/S code CS or CX. In the nitric acid dissolution, the nitric acid refluxed solution was filtered and sent to P/S code PS. The solid residues were recycled back into dissolution. The distillate from the condenser tube was recycled if there was low plutonium content, but was sent to P/S code LR if the plutonium content was high.

RCRA-regulated organics and metals were not used in this process and organics were not introduced with the feed material.

3.5.6.26 Metals Furnace (MF)

This process was active from May 23, 1986 to February 1989. Plutonium metal items were roasted in air at a carefully controlled temperature. After the metal was completely converted to plutonium oxide, the materials were divided into one-kg lots and canned for storage in the vault to await blending.

RCRA-regulated organics and metals were not used in this process and were not introduced with the feed materials. The metal items feed materials were of reasonable purity. Therefore, there would not be any RCRA-regulated solvents or metals in the waste streams generated by this process. This process generated typical glovebox waste, plus metal tools, containers, plastic bags, metal equipment, ceramic boats, rags, and brushes.

3.5.6.27 Non Combustible Leach (NL)

This process was active from 1979 to February 1989 and is very similar to P/S code LG1. Surface contaminated metal, glass, and plastic were subjected to nitric acid leaching and filtration. The filter residues were dried and discarded if they

met the DL. Otherwise, the residues were recycled back into the leaching step. The bulk matrix materials leached were assayed to see if they met the DL for disposal. If not, they were recycled into the leaching step. The filtrate containing the plutonium nitrate was sent to P/S LR for purification. This filtrate may have contained chromium, cadmium, and/or lead from stainless steel, shielding, and other metal feed materials (TWCP-3568/N-84).

RCRA-regulated organics were not used in this process and were not introduced with the feed materials. Therefore, there would not be any RCRA-regulated solvents in the waste streams generated by this process. The metal feed materials may have consisted of steel, stainless steel, aluminum, and copper. Any RCRA-regulated metals leached from these feed materials would be in the filtrate sent to P/S code LR. However, the leached metals may still contain concentrations of cadmium and/or lead above the regulatory limit, resulting in the debris waste requiring the applicable EPA HWNs (D006, D008) (TWCP-3568/N-84). The chromium in stainless steel does not leach out above the regulatory limit. This process generated the usual glovebox waste, plus glassware, metal tools and equipment, plastic filter boats, filter papers, rags, and brushes, as well as the metal, glass, and plastic matrices being leached (TWCP-3568/N-81).

3.5.6.28 Nitrate Recovery (NR)

The processes under P/S codes ED, HCD, MPD, and RFX were combined into this one P/S code; however, this P/S code was never activated. Therefore, waste was never generated under this P/S code.

3.5.6.29 Passivation (PA)

This process was active from 1979 to January 1990. Glovebox sweepings, oxides that may contain unoxidized plutonium metal, carbides, and nitrides that can be very reactive in an oxidizing acid are burned in a tube furnace in air to passivate the material and moderate its reactivity. It can then be sent to a dissolution process such as P/S SP or OD.

RCRA-regulated organics and metals were not used in this process and were not introduced with the feed materials; therefore, there would not be any RCRA-regulated solvents or metals in the waste streams generated by this process. This process generated the typical glovebox waste, plus metal

tools, containers, and equipment; ceramic furnace elements; rags; and brushes.

3.5.6.30 Peroxide Precipitation of MSE Salts (PS)

This P/S code was active from February 1986 to January 1987. Plutonium-containing nitric acid solutions from P/S code MB were filtered, diluted, stirred, and sampled for nuclear material content and to verify that the proper concentrations of materials existed in the solutions. The plutonium in the solution was precipitated out using hydrogen peroxide. The precipitate was filtered to separate it from the solution. The peroxide cake was redissolved in nitric acid and sent to P/S code SO. The americium-rich filtrate was dripped into sodium hydroxide solution to destroy the peroxide. The hydroxide slurry was acidified with nitric acid and an oxalate precipitation performed on the solution. The americium oxalate was separated as a cake by filtration and the cakes were sent to P/S code AO. The filtrate was sent to P/S code LR for recovery of plutonium.

RCRA-regulated organics were not used in this process and were not introduced with the feed materials. RCRA-regulated metals were not used in this process; however, if barium was present in the MSE salt feed material, it would be present in the americium oxalate filtrate that was sent to P/S code LR. According to the SME, however, it is very unlikely that barium was present in the feed material. Therefore, there would not be any RCRA-regulated solvents or metals in the waste streams generated by this process. This process generated the usual glovebox waste materials, plus plastic filter boats, glassware, metal stirrers and column end caps. This waste was disposed as solid TRU waste.

3.5.6.31 Plutonium/Thorium Separation (PT)

This process was active from 1979 to December 1985. Initially, plutonium/thorium oxides were dissolved in nitric and hydrofluoric acid (TWCP-3567/N-54). Sodium chromate and lanthanum nitrate were added to this solution. Thorium was removed from solution through formation of a thorium fluoride precipitate. After filtering out this precipitate, the plutonium and chromium were reduced to the (+3) valence state in solution using hydroxylamine nitrate and then sent to oxalate precipitation to recover the plutonium. Chromium in solution was sent to the evaporator (EV). Because of the

chromium, the waste solution from this activity is assigned the EPA HWN D007.

Later, the process changed to separate plutonium from thorium and americium using technologies similar to those used for ion exchange (TWCP-3567/N-54, N-55). Plutonium/thorium oxide residues were dissolved in nitric acid and passed through a nitrate-based ion exchange column to separate the two actinides. The column effluent containing thorium was subjected to a hydroxide precipitation and filtration. The filtrate was discarded into the process caustic waste line to the TA-50-1 RLWTF. The residue from filtration was calcined and discarded as a solid waste. The plutonium-containing ion exchange eluate was also subjected to a hydroxide precipitation and filtration. Because the plutonium cake is still contaminated with thorium, the slurry was redissolved in nitric acid and passed through a chloride ion exchange column. The thorium effluent underwent a hydroxide precipitation and filtration. The thorium residue is calcined and discarded. The filtrate is discarded into the process caustic waste line to the TA-50-1 RLWTF. The plutonium-bearing hydrochloride eluate undergoes hydroxide precipitation and filtration. The filtrate is discarded into the process caustic waste line to the TA-50-1 RLWTF. The plutonium hydroxide cake is dissolved again in nitric acid and sent to P/S code RR for recovery.

RCRA-regulated organics were not used in this process and were not introduced with the feed materials; therefore there would not be any RCRA-regulated solvents in the waste streams generated by this process. Chromium (D007) could be present due to the use of a chromate salt in the process from 1979 until December 1985. This process generated the typical glovebox waste streams, plus glassware; metal tools, equipment, and containers; plastic filter boats; filter papers; rags; and brushes.

3.5.6.32 RD&D Pretreatment Study (PTS)

This process was active from January 4, 1990 to February 1992. A variety of residue matrices were pulled into P/S code PTS to be characterized for impurities, state of division, and even pretreatment (milling, grinding, etc.) to achieve a desired state for use in fluoride volatility studies in P/S code CK. Most of the effort was expended on ash from LANL and Rocky Flats.

RCRA-regulated organics and metals were not used in this process, but the ash feed would have been high in heavy metals such that this P/S code would generate waste potentially contaminated with non-volatile heavy metals: barium (D005), cadmium (D006), chromium (D007), lead (D008), and silver (D011). Arsenic, mercury and selenium would not be present because they would have been volatilized. This process generated the typical glovebox waste streams, plus metal tools, containers, and equipment; plastic bags; ceramic furnace elements; ceramic boats; rags; and brushes.

3.5.6.33 Rotary Calciner (RC)

This process has been active from 1985 to the present. Ash from P/S codes IS and TDC and other carbon-containing ash and graphite crucibles are calcined in an oxygen or air stream. This removes organic carbon. The calcined ash is blended and sent to recovery. This process is also used to calcine uranium oxides before uranium separation.

RCRA-regulated organics and metals were not used in this process, but the ash feed would have been high in heavy metals such that this P/S code would generate waste potentially contaminated with non-volatile heavy metals: barium (D005), cadmium (D006), chromium (D007), lead (D008), and silver (D011). Arsenic, mercury and selenium would not be present because they would have been volatilized. This process generated the typical glovebox waste streams, plus metal tools, containers, and equipment; plastic bags; ceramic furnace elements; ceramic boats; rags; and brushes.

3.5.6.34 Oil Recovery (RO)

This process was active from 1979 to March 1989. Vacuum pump oils and other contaminated organics from various PF-4 operations were analyzed for nuclear material content. If they met the DL for plutonium, they were mixed with vermiculite and packaged in a drum for disposal. If the oils or organics contained plutonium above the DL, they were filtered through a glass frit so as to meet the DL. Any plutonium residue caught in the filter was to be sent to recovery operations.

Once in 1979, trichloroethylene (D040) was used as a diluent to reduce the viscosity of vacuum pump oil so that the oil

could be filtered through a glass frit. Otherwise, RCRA-regulated chemicals were not used in this code or present in the feed materials. Therefore, other than EPA HWN D040 in 1979, there would not be any RCRA-regulated solvents in the waste generated by this process.

RCRA-regulated metals were not used in this process. However, metal particles from the wear of vacuum pumps, such as lead, cadmium, and steel, could be in the oil; however, the metals are not soluble. The oils contain less than three percent of solids. Lead is the typical heavy metal in vacuum pump oils, while cadmium is found in hydraulic oils. The chromium from the steel is present in the oils in concentrations below the regulatory limit, based on analyses of similar low-level radioactive waste oils. These metal particles remain with the oil when it is absorbed on vermiculite. In the absence of analytical data or other acceptable information confirming that the concentrations of lead and cadmium are below the regulatory levels, the applicable EPA HWNs D006 and D008 are assigned pending additional information (TWCP-3568/N-83).

This process also generated the typical glovebox waste, plus glassware; metal tools, equipment, and containers; plastic bags and tubing; rags; and brushes.

3.5.6.35 Special Scrap Dissolution (SSD)

This process was active from March 10, 1988 to February 1991. Miscellaneous oxide scrap items were combined, dissolved in nitric acid/hydrofluoric acid, and filtered. The filter residues were dried on a hot plate and assayed. If the residues met the DL for plutonium, they were discarded as solid waste. If the plutonium concentration in the residues did not meet the DL, the materials were recycled back into the dissolution/filtering process. The plutonium nitrate-containing filtrate was sent to one of the ion exchange columns for purification.

RCRA-regulated organics were not used in this process and were not introduced with the feed materials; therefore, there would not be any RCRA-regulated solvents in the waste streams generated by this process. RCRA-regulated metals were not used in this process; the presence of heavy metals in the feed materials depends on the source of the feed materials. The feed materials could have contained cadmium, chromium, and/or lead as impurities. These metals would be

contained in the filtrate, which was sent to the ion exchange processes for further purification. The debris waste generated from this process is not expected to contain cadmium, chromium, or lead above the regulatory limits because the dissolution involved strong acids (any soluble metals should be in the filtrate). However, without analytical data or other acceptable information confirming that the concentrations of these hazardous constituents are below the regulatory levels, the applicable EPA HWNs D006, D007, and D008 are assigned pending additional information (TWCP-3568/N-83). This process generated the typical glovebox waste, plus glassware; metal containers, tools, and equipment; plastic filter boats; filter papers; rags; and brushes.

3.5.6.36 Americium Processing Silicon Removal (SX)

This process was active from 1979 through 1984. The americium-containing hydroxide cakes from the peroxide kill process (initially P/S code PR, but later P/S code OH) were redissolved in nitric acid and the solution concentrated through distillation to precipitate a gel of silica. The silica gel was separated by filtration, air dried, and discarded as solid waste at first and later immobilized in cement. The americium-containing filtrate was sent to P/S code AP.

RCRA-regulated organics and metals were not used in this process and were not introduced with the feed materials; therefore, there would not be any RCRA-regulated solvents or metals in the waste streams generated by this process. This process generated the following TRU solid waste: glass vessels, heating mantles, HEPA filters, and other glovebox waste, and rags. Because this process involved predominantly americium-containing feed material, waste materials were always discarded

3.5.6.37 Uranium Separation for Solid Solution Feed (US)

This process was active from January 25, 1984 to January 1986. Calcined solid solutions (consisting of uranium or plutonium oxide from P/S code RC) were dissolved in concentrated nitric acid, followed by oxalate precipitation of plutonium oxalate, and filtration. The uranium-bearing filtrate was partially neutralized, immobilized in cement (HP), and discarded. The plutonium oxalate cake was dried on a hot plate and calcined to the oxide. The oxide was again heated in concentrated nitric acid with the remaining uranium impurity dissolving. The resulting solution went to cement

fixation (HP). The insoluble plutonium oxide was separated by filtration, calcined, and sent to P/S code LC (for dissolution) or RR (for purification).

RCRA-regulated organics and metals were not used in this process and were not introduced with the feed materials, which were of high purity; therefore, there would not be any RCRA-regulated solvents or metals in the waste streams generated by this process. This process generated the usual glovebox waste, plus glassware, metal tools and equipment, plastic filter boats, filter papers, rags, and brushes.

3.5.6.38 Uranium Separation for Non-Solid Solutions (US2)

This process was active from January 25, 1984 to January 1986. The uranium in mixed plutonium-uranium oxide was dissolved in 5 molar nitric acid and filtered. The uranium solution was fixed in cement (HP) and discarded as waste. The solid plutonium oxide separated by filtration was dried on a hot plate and sent to P/S code LC (for dissolution) or RR (for recovery).

RCRA-regulated organics and metals were not used in this process and were not introduced with the feed materials; therefore, there would not be any RCRA-regulated solvents or metals in the waste streams generated by this process. This process generated the usual glovebox waste streams, plus glassware, heating mantles or hot plates, metal tools and equipment, plastic filter boats, filter papers, rags, and brushes.

3.5.6.39 Variable CSMO Scrap Dissolution (VC)

This process was active from April 1986 to December 1989 and is identical to P/S code SSD. Miscellaneous oxide scrap items were combined, dissolved in nitric acid/hydrofluoric acid, and filtered. The filter residues were dried on a hot plate and assayed. If the residues met the DL for plutonium, they were discarded as solid waste. If the plutonium concentration in the residues did not meet the DL, the materials were recycled back into the dissolution/filtering process. The plutonium nitrate-containing filtrate was sent to one of the ion exchange columns for purification. This filtrate may have contained chromium, cadmium, and/or lead from stainless steel, shielding, or other metal scrap items (TWCP-3568/N-84).

RCRA-regulated organics were not used in this process and were not introduced with the feed materials. The oxide feed materials have usually been through a heating process that would volatilize/decompose any organics. Therefore, there would not be any RCRA-regulated solvents in the waste streams generated by this process. The presence of heavy metals in the feed materials depends on the source of the feed materials. Any RCRA-regulated metals leached from these feed materials would be in the filtrate sent to ion exchange. However, the leached residues may still contain concentrations of cadmium and/or lead above the regulatory limit, resulting in the debris waste requiring the applicable EPA HWNs D006 and D008 (TWCP-3568/N-84). Any chromium in scrap metal does not leach out above the regulatory limit. This process generated the typical glovebox waste, plus glassware; metal containers, tools, and equipment; plastic filter boats; filter papers; rags; and brushes (TWCP-3568/N-81).

3.5.6.40 CSMO Scrap Dissolution (VP1)

This process was active from September 26, 1985 to April 1986. Plutonium-aluminum alloy from Hanford was dissolved in nitric acid using mercuric nitrate as a catalyst. If the item was pyrophoric, it was first calcined in P/S code PA. The quantity of mercuric nitrate was quite small because it was present as a catalyst. Filtration separated the solution of plutonium from aluminum metal pieces and a sludgy salt of aluminum nitrate. The metal pieces were picked out of the salt, which was discarded into cement. If the metal was discardable, it went to metallic waste. Plutonium-rich metal went back into dissolution. The plutonium solution was subjected to oxalate precipitation using oxalic acid or sodium oxalate, and filtered to form a cake that would be calcined to the oxide. The oxalate filtrate went to P/S code VP3. This process was modified to perform dissolution of the aluminum in sodium hydroxide after the first month because of the difficulty in controlling the reactivity of this system. The undissolved plutonium oxide could be separated by filtration and sent to one of the dissolution processes.

RCRA-regulated organics were not used in this process and were not introduced with the feed materials. RCRA-regulated metals were not introduced with the feed materials. However, in the first month of operation of this process (September 1985 to October 1985) mercuric nitrate was used in a very

small quantity as a catalyst in the dissolution step. The mercury would be found in the oxalate filtrate and, therefore, also introduced into P/S code VP3 during this time period. EPA HWN D009 (mercury) applies to waste generated under P/S codes VP1 and VP3 during the latter part of 1985. This process generated the usual glovebox waste streams, plus glassware, heating mantles, metal tools and equipment, rags, and brushes.

3.5.6.41 Polycube Processing (VP2)

This process was active from 1979 to April 1986. The skins and fragments of polycubes from P/S code DP were placed in a furnace and the polystyrene was decomposed to form volatile breakdown products in the form of oils, which were sent to Room 425 for absorption on vermiculite (eventually P/S code RO). The dry oxide residue was stored in the vault or sent to the dissolution processes.

RCRA-regulated organics and metals were not used in this process and were not introduced as feed materials; therefore, there would not be any RCRA-regulated solvents or metals in the waste streams generated by this process. This process generated glovebox waste, plus furnaces and furnace elements, metal containers and tools, vacuum pump oil, rags, and brushes.

3.5.6.42 Hydroxide Precipitation (VP3)

This process was active from 1979 to April 1986. In the early years of TA-55, the oxalate filtrates from P/S codes LR, RR, LC, SO, and VP1 were brought to P/S code VP3 to perform a hydroxide precipitation and filtration to separate out the plutonium hydroxide cake. The hydroxide cake went to P/S code LG2 for dissolution. The filtrate was discarded through the process caustic waste line to the TA-50-1 RLWTF. The oxalate filtrates from P/S code LC went to P/S code EV after June 1, 1984.

RCRA-regulated organics were not used in this process and were not introduced with the feed materials; therefore there would not be any RCRA-regulated solvents in the waste streams generated by this process. RCRA-regulated metals were not used in this process; however, mercury (D009) would have entered the process with the feed material from P/S code VP1 (from September 26, 1985 to October 31, 1985). The mercury would have precipitated in the hydroxide

cake. If the hydroxide cake contained plutonium below the DL, the mercury would accompany it to cement fixation (CF); therefore, this waste stream would be RCRA-regulated. If the hydroxide cake could not be discarded, it was sent to dissolution (P/S code LG2). This process generated the usual glovebox waste, plus plastic filter boats, filter papers, glassware, metal tools and equipment, rags, and brushes.

3.5.6.43 Scrap Oxide Dissolution (ZD)

This process was active from September 25, 1984 to November 1988. Scrap oxide from the vault and impure oxide from P/S code CL were dissolved in nitric acid and hydrofluoric acid, and filtered. The residues were collected into 900-gram batches and recycled through the process before being sent to the vault as intractable. The filtrates were sent to P/S code LR or RR ion exchange column for purification of the plutonium.

RCRA-regulated organics were not used in this process and were not introduced with the feed materials; therefore there would not be any RCRA-regulated solvents or metals in the waste streams generated by this process. RCRA-regulated metals were not used in this process; however, heavy metals are possible in the feed materials. These metals would end up in the filtrate that ultimately goes to the evaporator (EV). This process generated the typical glovebox waste streams, plus glassware; metal tools, containers, and equipment; plastic bags and filter boats; filter papers; rags; and brushes.

3.6 Material Inputs to the Waste Generation Process

Attachment 4 lists P/S codes for nitrate operations at TA-55, including process descriptions, feed material, other process inputs, process outputs, and type of waste. The feed materials for nitrate operations consist of the general types of materials listed in Table 1 that are obtained either from the storage vault, as process output from other P/S codes, or from sources outside TA-55, including other DOE sites. Although Pu is usually the radioactive element of interest in the feed materials, in some cases the feed material consisted of other radioactive elements, as indicated by Table 2.

Table 1. Process Feed Materials for Nitrate Operations

Feed Materials	Potential Presence of RCRA-Regulated Substances*	P/S Codes in Nitrate Operations
Analytical laboratory solutions	Potentially contaminated with RCRA-regulated constituents • All analytical laboratory solutions are potentially contaminated with chromium (D007), lead (D008), and mercury (D009) • CLS-1 solutions potentially contaminated with mercury (D009) and lead (D008), as well as RCRA-listed organic substances used as solvents, including acetone (F003), butyl alcohol (F003), carbon tetrachloride (D019), chlorobenzene (F002, D021), chloroform (D022), methanol (F003), methylene chloride (F002), tetrachloroethylene (F002, D039), xylene (F003) (Cl-25/TWCP-3547).	CF, HP (if solutions contained Pu >DL)
Anode heels	Typically contaminated with RCRA-regulated heavy metals Cd, Cr, Pb and Ag (D006, D007, D008, D011). Heavy metals As, Hg, and Se are not present because they are volatilized from the Pu oxide feed at the high temperatures to which this material is subjected in P/S codes ER, RM, and SS (electrorefining step).	AS, BU, NC
Ash from P/S codes ETD and TDC; or from other DOE sites such as Hanford	Usually suspect contaminated with Ba, Cd, Cr, Pb, and Ag (D005, D006, D007, D008, D011). As, Hg, and Se may also be present although these metals are volatilized at high temperatures if present in the oxide and chloride forms.	AL, AT, ATL, ED, HGMS, HRA, IS, MPD, PTS, RC, SC
Crucible pieces (tantalum, magnesium oxide)	Typically fairly pure, no RCRA substances present	MAS, SC
Disassembled weapons components	High-purity Pu and U material types, no RCRA substances present	BM, RB, RBJ
Experimental R&D feed materials; various isotopes and isotopic mixtures of actinides in various matrices	Variable purity; may or may not contain RCRA substances	MAS
Hydroxide cakes	Typically contaminated with RCRA-regulated heavy metals Cd, Pb, Hg, Ag and possibly Cr (D006, D008, D009, D011, and D007)	CD, HCD, HD, LG2

Feed Materials	Potential Presence of RCRA-Regulated Substances*	P/S Codes in Nitrate Operations
Miscellaneous materials contaminated with Pu (e.g. tools, metal, glass, plastic, labware, scrap, rags, glovebox sweepings, pump oils, HEPA filters, Hanford [Hanford materials])	Typically contaminated with RCRA-regulated heavy metals Cd, Pb, Hg, Ag and possibly Cr (D006, D008, D009, D011, and D007)	ATL, BAC, CPOD, ED, ETD, GMS, HGMS, HRA, IS (combustible material), LG1 (non-combustible material), MAG, MAS, MELL (cellulosic material), ML (metal equipment), NC (non-combustible material), NL (non-combustible material), PA (glovebox sweepings), PAF, RO (organics), SC, SP, TDC (cellulosic material), VC, ZD
MSE salts	Typically fairly pure, suspect contaminated with barium (D005)	MB, PS
Pu metal or metal alloy, Hanford (Hanford materials)	High purity, no RCRA-regulated substances, unless noted otherwise	ATL, BM, BU, MF, PAF, VP1
Pu oxalates	High purity, no RCRA-regulated substances, unless noted otherwise	CC, DF, HC
Pu oxides, Hanford (Hanford materials)	Variable purity from P/S codes RB, RBJ and others, and from the vault; suspect contaminated with RCRA-regulated heavy metals Cd, Cr and Pb (D006, D007, D008) High purity oxides and material from Hanford from P/S codes CA and MA, and from the vault; no RCRA substances	ATL, BL, CH, CPOD, DP, ED, FC, HRA, LC, MPD, OD, PT, RB, RBJ, SP, SSD, UPS, US, US2
Pyrochemical salts	Typically fairly pure, no RCRA substances other than Ba are present	COD, COL, MB

* The information in this column is highly generalized. Applicability of specific EPA HWNs to a process as a result of the feed material must be determined on a case-by-case basis because the presence and fate of contaminants is time and function dependent.

Table 2. P/S Codes with Radionuclides Other Than Pu in Feed Materials

P/S code in nitrate operations	Radionuclide in feed material
AO, AP, FA, PR	Am-241
ATL	Np-237
CF	Am-341, U, Th-232
HP, IA, OH, SX	Am-241
LC, RC, UPS, US	U
PT	Th-232

The remainder of this section summarizes the nature of the process waste in terms of its physical, chemical and radioisotopic characteristics.

3.6.1 Physical Form Identification

Solid waste from nitrate operations primarily consists of metal and debris waste, as well as cemented waste discarded under P/S codes CF or HP. Debris waste contains glassware, plastics, ceramic materials, paper, rags, HEPA filters, metal containers, brushes, and small tools. Lead-containing debris items are segregated and packaged separately (TWCP-3567/N-39). Prior to 1987, leaded gloves were discarded in the combustible and non-combustible debris waste streams. Between 1987 and May 1992, leaded gloves were segregated from combustible debris and discarded in the metal debris waste stream because of concern that explosive lead oxides might form if the combustible debris waste were incinerated. Since May 1992, leaded gloves have been routinely segregated from other metal debris waste and assigned to a separate leaded-glove waste stream.

Because items from several different processes are usually combined into individual waste drums, the physical waste form of each drum must be determined independently. This information is documented on a Waste Origination and Disposition Form (WODF) by the waste generator according to controlled procedures. The P/S code for each waste item is also documented on this form. In the packaging process, a standard form, the Discardable Waste Log Sheet (DWLS), is used to list each item number and record its matrix material. This form is signed by the waste packager, and then reviewed and approved by quality assurance (QA) personnel. Example forms for one drum of waste generated can be viewed in record TWCP-2513.

3.6.2 Radionuclide Content Identification

The primary plutonium material type inputs for nitrate operations at TA-55 are listed in Table 3. The designation *material type* (MT) (e.g., MT 52) is used within the DOE Complex to describe the isotopic composition of common blends of radioactive materials used within the Complex. The material type notation was developed because it is a convenient way to describe material types that have very consistent isotopic compositions. Please note that Table 3 indicates the isotopic composition of the material types at the time the waste was characterized.

The MT provides the basis for estimating an upper bound for U-234, U-235, and Am-241 contents based on the rate of decay of their precursors, Pu-238, Pu-239 and Pu-241, respectively. These bounding calculations provide a basis for identifying enrichment or depletion of one

radionuclide versus another based on radioassays of individual waste containers. The results of these calculations are also tabulated in Table 3. The calculations assume that (a) none of these isotopes were initially present in the material, (b) the oldest Pu material in inventory dates back to 1 January 1960, and (c) the waste was packaged on 1 January 1996, making it 36 years old at that time (TWCP-698).

The material type used in the process generating each waste item was documented on the WODF and DWLS. However, some of the plutonium recovery processes separate plutonium and americium, or plutonium and uranium, so that their relative ratios may be altered in the process outputs and wastes. Waste items may be either depleted or enriched in Am-241 or U-234 depending on whether the source of contamination is the process product or the process residues (TWCP-882). Table 4 indicates some P/S codes in which enrichment of radioelements other than Pu are expected to be greater than usual.

Residues submitted for reprocessing often contain Np-237, the decay product of Am-241 (half-life, 458 yr). This radioisotope is expected to be present in minor amounts in nearly all debris waste from nitrate operations at TA-55, with exceptions as noted in Tables 2 and 4. In addition, Pa-231 and Cs-137 may be present in trace amounts due to their widespread presence as contaminants in TA-55 operations (TWCP-5164, TWCP-5165).

In general, uranium and its isotopes are expected to be present only at trace levels, if at all. U-238 would only be present if uranium was the feed material (e.g., as has been the case for P/S codes LC, RC, UPS, US, and sometimes CF; Table 2). U-235 in growth from the decay of Pu-239 half-life, 24,120 years) would be negligible due to the long half-life of Pu-239. Uranium-234 would be present in MT 83 as a decay product of Pu-238 (half-life, 87.74 years). After 20 years, 14.6 percent of the initial Pu-238 would have decayed to U-234. For MT 83 with an initial content of 83.89 percent Pu-238, the atomic ratio U-234 to total Pu would be about 0.14. No U-236 is present.

During TWCP characterization, the contents of each waste package undergo non-destructive analysis to provide detailed radioisotopic data. These data are used to evaluate the accuracy of AK information in accordance with *Waste Characterization Data Reconciliation with Acceptable Knowledge* (TWCP-DTP-1.2-064). This AK report will be updated to incorporate the results of these comparisons.

3.6.3 Chemical Content Identification

Chemical inputs to nitrate operation processes are listed in Table 5. The use of strong acids, bases, or oxidizers does not result in RCRA listings

Table 3. Average Isotopic Content of Plutonium Material Types and Enrichments

Material Type (MT)	Plutonium Isotope (Wt.%) and Half-Life						Upper Bounds for Dimensionless Weight Ratios[a]		
	Pu-238 (87.74 yr)	Pu-239 (24120 yr)	Pu-240 (6564 yr)	Pu-241 (14.35 yr)	Pu-242 (376,300 yr)	Pu-244 (8.26 x 10^7 yr)	U-234/ Total Pu	U-235/ Total Pu	Am-241/ Total Pu
MT 51	0.006	96.77	3.13	0.076	0.018	—	1×10^{-5}	0.001	0.0006
MT 52	0.01	93.78	6	0.2	0.02	—	2×10^{-5}	0.001	0.002
MT 53	0.03	91.08	8.45	0.366	0.071	—	7×10^{-5}	0.0009	0.003
MT 54	0.046	87.42	11.5	0.81	0.22	—	0.0001	0.0009	0.007
MT 55	0.06	83.88	14.73	1.03	0.304	—	0.0002	0.0009	0.009
MT 56	0.061	81.9	16.51	1.18	0.355	—	0.0002	0.0009	0.01
MT 57	0.433	74.63	20.7	2.55	1.69	—	0.001	0.0008	0.02
MT 42									
84%	1.02	1.37	10.32	3.13	84.14	0.02	0.003	1×10^{-5}	0.03
90%	0.72	1.26	6.4	1.86	89.77	—	0.002	1×10^{-5}	0.02
95%	0.45	0.56	2.47	0.906	95.58	0.029	0.001	6×10^{-6}	0.008
MT 83									
83%	83.89	13.8	1.9	0.32	0.09	—	0.26	0.0002	0.003
89%	89.26	10.07	0.633	0.021	0.015	—	0.28	0.0001	0.0002

[a] These ratios are calculated under the assumption that no chemical fractionation occurs and, hence, are intended to be used to identify fractionation when it is present by comparing these upper bounds to radioassay data.
Source: TWCP-698

Table 4. Secondary Radionuclides in Process Wastes

P/S code	Secondary radionuclide in process waste
AO	Am-241 (1979—1984, Am-241 production) Am-241 (1985—1987, impure AmO_2 for disposal)
AP	Am-241 (1979—1984, Am-241 production)
ATL	Np-237 (1993—1994, NDA standards material)
CD, HCD, HD	Am-241 (1992—present)
CF, ED, EV, RB, RFX	Np-237 as decay product in MSE (1992—present)
EV	Am-241 (1979—1984, Am-241 production) Am-241 (1992—present)
FA	Am-241 (1979—1984, Am-241 production)
HP	Am-241 (1979—1984, Am-241 production) Am-241 (1985—1987, impure AmO_2 for disposal) Am-241 (1992—present)
IS	Cm-244 (March 1987—April 1987)
LR, PR	Am-241 (1979—1984, Am-241 production)
PS	Am-241 (1985—1987, impure AmO_2 for disposal)
PT	Th-232 (1980—1985)

Source: TWCP-882

Table 5. Chemical Inputs to Processes Described in This Report

Chemical Input	P/S Codes in Which RCRA-Listed Chemicals Are Used	Comments on Applicability of RCRA HWNs (if any)
Gases		
Argon gas Nitrogen gas		
Acids		
Ascorbic acid Formic acid Hydrochloric acid Hydrofluoric acid Nitric acid Oxalic acid Sulfuric acid		D002 does not apply to the TRU solid waste because there are no free liquids in this waste
Bases		
Potassium hydroxide Sodium hydroxide		D002 does not apply to the TRU solid waste because there are no free liquids in this waste
Inorganic Chemicals		
Aluminum nitrate		
Calcium fluoride		
Calcium nitrate		
Cerium nitrate		
Cobalt nitrate		
Ferric ammonium sulfate hydrate		
Ferric nitrate		
Ferrous ammonium sulfate		D003 does not apply to the TRU solid waste because there are no free liquids in this waste.
Ferrous sulfamate		
Gypsum cement		
Hydrogen peroxide		
Hydroxylamine nitrate		
Lanthanum nitrate		
Magnesium oxide		
Mercuric nitrate	VP1	D009. Used as catalyst in P/S code VP1; hydroxide cake produced in VP1 is processed in P/S code VP3
Portland cement		
Potassium fluoride hydrate		
Potassium thiocyanate		
Silver nitrate	AT, CPOD	D011, used as catalyst from 1990 to 1994 in CPOD. D011 does not apply to P/S code AT because it was used in a cold lab and did not become part of any TRU waste.
Sodium chloride		
Sodium chromate	PT	D007, used in separation of Th from Pu/Am
Sodium nitrite		
Sodium oxalate		
Metals		
Platinum		
Stainless steel		
Titanium		

Chemical Input	P/S Codes in Which RCRA-Listed Chemicals Are Used	Comments on Applicability of RCRA HWNs (if any)
Organic Chemicals		
Acetone	OH, OY	F003 if used as a solvent
Diethyl oxalate		
Ethanol		
Formamide		
Ion exchange resin		
Oil (engine)		
Organic liquid emulsifier		
Phenolphthalein		
Phosphate buffer solution		
Phthalate buffer solution		
Polyoxyethylene-20-Sorbitan laurate (surfactant)		
Silicon adhesive		
Silicon defoamer (General Electric AF9020, Silicon Antifoam Emulsion)		
Sodium citrate retarder		
Trichloroethylene	RO	D040 applies to P/S code RO; used once in 1979 as diluent for oils
Urea		
Vacuum grease		

for solid debris waste from these processes because of the absence of free liquids in this waste.

4.0 ASSIGNMENT OF EPA HAZARDOUS WASTE NUMBERS

The assignment of EPA HWNs to process wastes from nitrate operations is summarized below, as well as on the process timelines in Attachment 3, and the table of process inputs and outputs in Attachment 4. These assignments are based on the possible presence of RCRA chemicals in process waste as a result of their suspected or known presence in feed materials, chemical inputs, equipment, and glovebox surfaces.

4.1 F, K, and P Listings

F002 and F003 apply to waste discarded under P/S codes CF and HP. Some of the solutions sent to these P/S codes for immobilization in cement contain the following organic chemicals:

- F002: methylene chloride
- F003: acetone, butyl alcohol (n-butanol), methanol, tetrachloroethylene, and xylene.

No K or P listings apply to solid wastes generated from any of the P/S codes in this report because no K-listed or P-listed chemicals were present in the feed materials, chemicals or equipment used in these processes.

4.2 Toxicity Listings

D008 (lead) applies to all P/S codes due to the potential to generate leaded gloves. Prior to 1987, leaded gloves were not segregated from combustible debris. Between 1987 and May 1992, leaded gloves were segregated and discarded in the metal debris waste stream. Since May 1992, leaded gloves have been routinely segregated and assigned to a leaded-glove waste stream, still under the originating P/S code (TWCP-4166). Lead-containing debris waste is segregated and packaged separately from other debris waste (TWCP-3567/N-39); these wastes also are assigned D008.

Waste from most P/S codes in nitrate operations carry several EPA HWNs due to the presence of metals with toxicity characteristics in the feed materials. P/S codes covered by this report carry the following codes for heavy metals:

AL	D005, D006, D007, D008, D009, D011
AO	D006, D007, D008, D009, D011
AP	D007, D009
AS	D006, D007, D008, D011
AT	D005, D006, D007, D008, D011

ATL	D005, D006, D007, D008, D009, D011
BF	D006, D007, D008, D011
BU	D006, D007, D008, D011
CD	D005, D006, D007, D008, D009, D011
CF	D007, D008, D009, D011, D019, D021, D022, D039
COL	D005
CPOD	D011
DS	D005, D006, D007, D008, D009, D011
ED	D005, D006, D007, D008, D009, D011
ETD	D005, D006, D007, D008, D011
EV	D006, D007, D008, D009, D011
FX	D006, D007, D008, D009, D011
HCD	D005, D006, D007, D008, D009, D011
HD	D005, D006, D007, D008, D009, D011
HGMS	D006, D007, D008, D009, D011
HP	D007, D008, D009, D011, D019, D021, D022, D039
HRA	D005, D006, D007, D008, D009, D011
IA	D006, D007, D008, D009, D011
IS	D005, D006, D007, D008, D011
LG1	D006, D008
LG2	D006, D007, D008, D009, D011
LR	D005, D006, D007, D008, D009, D011
MB	D007, D008, and D009 (in accordance with discussion in TWCP-AK-2.1-002,R.2, section 3.6.2)
MELL	D006, D007, D008, D009, D011
ML	D006, D008
MPD	D005, D006, D007, D008, D009, D011
NC	D006, D008
NL	D006, D008
OD	D006, D007, D008
OH	D006, D007, D008, D009, D011
PT	D007
PTS	D005, D006, D007, D008, D011
RC	D005, D006, D007, D008, D011
RCM	D005, D006, D007, D008, D009, D011
RFX	D005, D006, D007, D008, D009, D011
RO	D006, D008, D040
RR	D006, D007, D008, D009, D011
SC	D005, D006, D007, D008, D009, D011
SP	D006, D007, D008

SSD	D006, D007, D008
TDC	D005, D006, D007, D008, D011
VC	D006, D008
VP1	D009
VP3	D009
VUL	D005, D008

D001 (ignitable), D002 (corrosive) or D003 (reactive) do not apply to the solid wastes from nitrate operations because no ignitable chemicals were used in these processes and because the solid wastes do not contain any free liquids (see Section 5.0).

5.0 VERIFICATION THAT IGNITABLE, REACTIVE, AND CORROSIVE WASTES WERE EXCLUDED

According to the WIPP WAP, "The prohibition of liquids and containerized gases prevents the shipment of corrosive, ignitable, or reactive wastes." Administrative controls on waste packaging were in place at various times to ensure the absence of such items from the waste stream.

- Liquids were prohibited from solid waste streams at TA-55 when the facility opened in January 1978. A waste management procedure written to cover operations at the new facility, *TA-55 Standard Operating Procedure (SOP) 406-GEN-R00*, stated that "Liquids are not permitted in any container of solid waste materials" (TWCP-3943).

- Chemical Waste Disposal Requests introduced in June 1980 included checkboxes that the waste generator was required to check if the waste contained corrosive acids or bases, or pyrophoric, flammable, corrosive, explosive, toxic, carcinogenic or highly reactive materials.

- The Certification Plan (TWCP-697) and related Generator Attachments (TWCP-701) were implemented in 1987. Waste generators were required to sign a statement on the WODF documenting that the waste contained "no free liquids, pyrophorics, explosives, compressed gases, powders or materials other than the indicated matrix." Checkboxes were also present for indicating the presence or absence of corrosive chemicals. Full implementation of this generator statement occurred in May 1987.

- Waste management inspectors perform visual verification of the waste prior to its initial packaging, thus allowing the inspectors to verify the generator's WODF statement (TWCP-701, Sections 3.8.5 to 3.8.6).

- In addition to the above-mentioned prohibitions on explosives in wastes, explosives were prohibited from TA-55 until installation of the Impact Test Facility in the early 1990s. Explosives continue to be banned in the solid waste streams up to the present time. If a misfire should occur, the requirement is to destroy the unspent powder by burning (TWCP-4720).

- The Waste Profile Request Form (WPRF), in use since 1991, includes a statement that must be authenticated by the waste generator, that the waste is not ignitable (flash point >200°F), reactive, or corrosive.

- The TA-55 Generator Attachments to the Certification Plan were updated in 1995 (TWCP-700) re-emphasizing the prohibition on liquids in the waste, and the continuation of waste management inspection.

Hence, since the inception of operations at TA-55, corrosive and reactive wastes have been excluded from TA-55 solid wastes through the prohibition of liquids.

The absence of these prohibited items is verified through radiography of each waste container and visual examination of selected containers during TWCP characterization activities. These data are used to assess the accuracy of AK information in accordance with *Reconciliation of Visual Examination and Radiography Information* (TWCP-QP-1.1-028). Any free liquids are remediated, or the container is tagged as non-compliant by filing a Prohibited Waste Report in accordance with *Nonconformance Reporting and Tracking* (TWCP-QP-1.1-007).

6.0 VERIFICATION THAT INCOMPATIBLE CHEMICALS WERE PROHIBITED

Section 5.0 summarizes administrative controls in place at TA-55 that prohibit incompatible chemicals in the waste, and measures taken to verify their absence. In addition, all waste containers shipped from TA-55 to TA-54 for storage are evaluated for potentially incompatible chemicals in accordance with 49 CFR Subpart C—Segregation and separation chart of hazardous materials; Section 177.848, Segregation of hazardous materials, and were determined to be in compliance with this requirement.

7.0 VERIFICATION THAT THERE ARE NO COMPRESSED GASES, FREE LIQUIDS, NONRADIONUCLIDE PYROPHORICS, SEALED CONTAINERS GREATER THAN FOUR LITERS IN VOLUME, OR >1% RADIONUCLIDE PYROPHORICS

Most gases used at the TA-55 Plutonium Facility are stored outside the building and the gas is plumbed into the glovebox from outside (TWCP-4164). Occasionally, a lecture bottle may have been used for a process inside the building, but these bottles were kept outside of the glovebox with the gas plumbed into the glovebox. Consequently, compressed gas cylinders or containers are not expected to be in any of the TRU wastes generated by TA-55 operations.

Spray cans, especially WD-40, were in common use in TA-55 gloveboxes until May 1992 (TWCP-4166) and were routinely discarded as metal debris waste. From 1988 until May 1992, the protocol was to vent or puncture the spray cans inside the glovebox; and venting was confirmed by inserting a metal wire into the valve. After May 1992, spray cans were no longer used in gloveboxes.

For items of pyrochemical salt waste, the procedures of oxygen sparging and/or carbonate oxidation have been used since May 1987 to ensure that pyrophorics were oxidized. In addition, screening tests on similar pyrochemical salts and residues (which contain higher amounts of plutonium) at the Rocky Flats Environmental Technology Site (TWCP-2501) have shown (1) no autoignition, (2) no spontaneous combustion, (3) and no sparking. Experimental results on the reactivity of LANL direct oxide reduction (DOR) salt with water and the reactivity in air of heated calcium metal nodules from DOR salts indicate the absence of "dangerous when wet materials" and pyrophoricity in these salts (TWCP-3730, TWCP-3731, TWCP-3732).

Verification that individual waste drums do not contain compressed gases, free liquids, or sealed containers greater than 4 L in volume is obtained from radiography of each waste containers and visual examination of selected containers during TWCP characterization activities. Any free liquids are remediated, and any sealed containers greater than 4 L in volume, or unpunctured or unvented gas containers, are removed, or the waste container is tagged as non-compliant by filing a Prohibited Waste Report in accordance with *Nonconformance Reporting and Tracking* (TWCP-QP-1.1-007). For administrative controls on the prohibition of pyrophorics, see Sections 5.0 and 6.0.

8.0 VERIFICATION THAT THERE ARE NO POLYCHLORINATED BIPHENYLS (PCBs) IN THE WASTE STREAM

No PCBs were introduced into the nitrate operations, based on documentation in TA-55 procedures reviewed during the AK investigation and summarized in the process inputs listed in Table 1, Table 5, and Attachment 4. In the cement fixation process (P/S codes CF and HP), oils are sometimes added to drums of cemented waste. There is no indication these oils contain PCBs, and they are added to the 55-gallon drums of cement in small quantities (maximum of 6 liters [TWCP-3568/N-74]). The oils are primarily vacuum pump oils, along with some oils used in heat-treating (cooking or silicone oils) or in grinding (TWCP-3568/N-82). None of these oils are known to contain PCBs. All transformers known to contain PCBs have been tracked from initiation of operations of TA-55 in 1978. When any transformer oil is drained, the oil is handled by a subcontractor who is wholly responsible for its disposal; this oil does not enter the LANL disposal operations.

9.0 CITED PROCEDURES AND REQUIREMENTS DOCUMENTS

- 40 CFR Part 261, Subpart C—Characteristics of hazardous waste, Sections 261.21 (*Characteristic of ignitability*), 261.22 (*Characteristic of corrosivity*), 261.23 (*Characteristic of reactivity*), and 261.24 (*Toxicity characteristic*)

- 40 CFR Part 261—Identification and Listing of Hazardous Wastes

- 40 CFR Part 261, Subpart D—Lists of hazardous waste, Sections 261.31 *(Hazardous wastes from non-specific sources),* 261.32 *(Hazardous wastes from specific sources),*

and 261.33 *(Discarded commercial chemical products, off-specification species, container residues, and spill residues thereof)*

- 49 CFR Subpart C—Segregation and separation chart of hazardous materials. Section 177.848, *Segregation of hazardous materials*
- *Acceptable Knowledge Documentation* (TWCP-QP-1.1-021)
- *Nonconformance Reporting and Tracking* (TWCP-QP-1.1-007)
- *Records Management* (TWCP-QP-1.1-004)
- *Reconciliation of Visual Examination and Radiography Information* (TWCP-QP-1.1-028)
- *Waste Acceptance Criteria for the Waste Isolation Pilot Plant* (DOE/WIPP-069) (WIPP WAC)
- *Waste Analysis at Facilities that Generate, Treat, Store and Dispose of Hazardous Waste* (EPA/OSWER 9938.4-03)
- Waste Analysis Plan, Attachment B to the *Hazardous Waste Facility Permit Issued to the Waste Isolation Pilot Plant* (EPA No. NM4890139088)
- *Waste Characterization Data Reconciliation with Acceptable Knowledge* (TWCP-DTP-1.2-064)

ACCEPTABLE KNOWLEDGE ROADMAP

Waste from P/S Codes AL, AO, AP, AS, AT, ATL, BAC, BF, BL, BM, BU, CC, CD, CF, CH, COD, COL, CPOD, CR, DF, DP, DS, ED, ETD, EV, FA, FC, FX, GMS, HC, HCD, HD, HGMS, HP, HRA, IA, IS, LC, LG1, LG2, LR, MAG, MAS, MB, MELL, MF, ML, MPD, NC, NL, NR, OD, OH, OY, PA, PAF, PR, PS, PT, PTS, RB, RBJ, RC, RCM, RFX, RO, RR, SC, SP, SSD, SX, TDC, UPS, US, US2, VC, VP1, VP2, VP3, VUL, ZD

Copies of these documents are in the TWCP RMDC Center. Refer to *Records Management* (TWCP-QP-1.1-004) for information on obtaining copies of these documents

TWCP Record No.	Information Category Code*	Information	Source	Summary	Limitations
TWCP-352	B	Description of plutonium recovery processes	Wastes from Plutonium Conversion and Scrap Recovery Operations, LA-11069, March 1988	Document describes the Pu residues and the various treatment approaches used in recovering plutonium from scrap	Document does not give information about RCRA constituents introduced or present in the processes
TWCP-614	D	All TA-55 waste is Defense related.	Memo from Doug Sankey.	All TA-55 waste is Defense related.	Budget information may not be acceptable.
TWCP-697	C	Waste was controlled to meet WIPP WAC requirements as early as 1983.	*Los Alamos TRU Waste Certification Plan for Newly Generated TRU Waste,* WCP-HSE7-CPL-01, R.2 (November 1984)	Waste was controlled to meet WIPP WAC requirements as early as 1983. Generator Attachments were used to describe and reference specific generator procedures.	Overview document - Generator Attachments provide more detailed information.
TWCP-698	B	Gives Material Type compositions	NMT Memo, NMT-7 WM/EC-96-032 Benchmark Environmental Corp. Memo, AL-7193 BEC	Gives Material Type compositions	Does not give information on how material may fractionate in TA-55 waste processes.
TWCP-700	C	*Attachment 3 to the Los Alamos TRU Waste Certification Plan for Newly Generated TRU Waste,* R05	*NMT-7 Attachment, January 1995,* TRUWM-TA55-CPA-03,R00	Documents controls to meet WIPP WAC were implemented and how independent verification was accomplished.	Information is not extremely detailed.

* Information Category Codes: A = forms intended for use in waste certification, B = data from controlled databases and published documents, C = unpublished data, and D = interviews, memos, and letters

TWCP Record No.	Information Category Code*	Information	Source	Summary	Limitations
TWCP-701	C	*TA-55 Generator Attachment* to the *TRU Waste Certification Plan for Newly Generated TRU Waste*	*TA-55 Attachment, 1987,* TRU-MST12-CPA-03,R00	Documents controls to meet WIPP WAC were implemented and how independent verification was accomplished.	Information is not extremely detailed.
TWCP-816	D	Jim Foxx Interview on Number of Layers of Packaging	C.L. Foxx, Los Alamos National Laboratory	Waste was co-mingled with room trash, and was initially boxed as low-level waste. Subsequently, some of these waste boxes were returned for disposal in drums as TRU waste when on-site radioassay results showed them exceeding the low-level DLs.	None
TWCP-882 (UCNI)	D	Secondary Radionuclides and Toxic Metals in TA-55 TRU Waste	Memo from Jim Foxx	Lists additional radionuclides and metals potentially in waste, subdivided by process status code. Covers time period from 1978 to present.	Best information available, but it is based on worker recollection because other records are not available.
TWCP-886	C	Color Flow Diagram of Pu-processes at TA-55.	Diagram from Jim Fixx	Indicates that process inputs are thermally treated and that heavy metals from process inputs end up in the nitric acid evaporator bottoms.	Does not indicate solvent input to processes.
TWCP-887	D	Co-mingling of Defense and Non-Defense TRU Waste	Memo from Jim Foxx	Wastes generated from defense and non-defense activities were not segregated at TA-55 through 1997	None
TWCP-2501	B	"Backlog Waste Reassessment Baseline Book, Waste Form 34"	Rocky Flats Environmental Technology Site Report 1995	Page WF34-10 contains results of tests for corrosivity	Tests were conducted on residues rather than on waste.

* Information Category Codes: A = forms intended for use in waste certification, B = data from controlled databases and published documents, C = unpublished data, and D = interviews, memos, and letters

TWCP Record No.	Information Category Code*	Information	Source	Summary	Limitations
TWCP-2513	A	Example of Generator Reports for Drum 54856	TA-55 Records Management Center	Example of generator records including WPRF #07045 and WODF form showing the waste generator certification statement.	Older forms are often hard to read.
Cl-25/ TWCP-3547 (UCNI)	D	Answers to questions about chloride processes	Interview with Jim Foxx, 9/23/99	Answers to questions on Chloride processes; CLS-1 solvent list	None
TWCP-3548/ N-1 (UCNI)	B	General description of the overall Nitrate recovery process.	*TA-55 Final Safety Analysis Report* (07/13/95)	Each step of the nitrate recovery process is described. This includes pretreatment, dissolution, purification, oxidation, and evaporation.	It provides mostly a current (as of 1995) description of the process. It alludes to past practices in places.
Nitrate Pretreatment Procedures					
TWCP-3548/ N-2 (UCNI)	C	P/S diagram; process diagram; process description (P/S GMS, MAG, MAS)	Magnetic Separation Research and Development; Magnetic Separation, 460-REC-R00 through R01, 1/30/89 through 11/2/92	Describes magnetic separation processes for lean and rich residues. Lean residues <EDL are sent to cement fixation.	None
TWCP-3548/ N-3 (UCNI)	C	Process description	Standard Operating Procedure for Handling Process Generated Residues at TA-55, 503-GEN-R00, 2/28/78	Procedure for residue handling, including liquid residues sent to recovery, not specified if nitrate or chloride processing.	None
TWCP-3548/ N-4 (UCNI)	C	Process description	Standard Operating Procedure for the Packaging of Rags for Recovery, 504-GEN-R00, 2/25/78	Describes rinsing of nitrated rags in water. Water sent to ion exchange.	None
TWCP-3548/ N-5 (UCNI)	C	Chemical list; process description (P/S IS based on description)	Incinerator, 422-REC-R00 through R04, 3/1/78 through 1/15/87	Describes incinerator process and disposition of ash.	P/S code IS assigned based on title and description

* Information Category Codes: A = forms intended for use in waste certification, B = data from controlled databases and published documents, C = unpublished data, and D = interviews, memos, and letters

TWCP Record No.	Information Category Code*	Information	Source	Summary	Limitations
TWCP-3548/ N-6 (UCNI)	C	P/S Diagram; process description (P/S TDC)	Thermal Decomposition of Cellulose Items, 402-REC-R00, no date	Describes thermal decomposition of rags in an inert atmosphere and also how nitrated rags were soaked in water and the water sent to ion exchange.	No date is available for this procedure.
TWCP-3548/ N-7 (UCNI)	C	Process diagram; chemical list; process description (P/S PAF)	Oxidation of Pu Metal and Alloys Prior to Dissolution; Oxidation of Pu Metal and Alloys; Passivation Furnaces, 429-REC-R00 through R05, 3/1/78 through 12/12/95	Describes passivation furnace process.	None
TWCP-3548/ N-8 (UCNI)	C	Process description	Procedure for Burning of (Pu, U) Carbides; Burning Plutonium and/or Uranium Carbides and Nitrides, 428-REC-R00 through R02, 3/1/78 through 12/8/86	Pu and U nitrides or carbides are burned to remove pyrophorics.	None
TWCP-3548/ N-9 (UCNI)	C	P/S diagram, chemical list, process description (P/S VUL)	Vessel Handling and Unloading, 494-REC-R00, R01, R02, and R04, 11/15/91 through 3/12/93		R04 is marked as "Draft" with no approval signatures or date.
TWCP-3548/ N-10 (UCNI)	C	Chemical list; process description	Procedure for Disposal of Oils Containing Recoverable Amounts of Pu in the Form of (U, Pu) Carbides, 431-REC-R00, 1/26/78; 431-REC-R01, no date	Oils are filtered for Pu recovery. Oils <EDL are absorbed on vermiculite for disposal. Filtered solids are sent to dissolution.	None
TWCP-3548/ N-11 (UCNI)	C	Process description	Passivation, 431-REC-R00, 12/19/86	Passivation of Pu bearing materials to remove pyrophorics (Ca, Mg metal).	None

* Information Category Codes: A = forms intended for use in waste certification, B = data from controlled databases and published documents, C = unpublished data, and D = interviews, memos, and letters

TWCP Record No.	Information Category Code*	Information	Source	Summary	Limitations
TWCP-3548/ N-12 (UCNI)	C	P/S Diagram; chemical list; process description (P/S TDC)	Thermal Decomposition of Cellulose Items, 498-REC-R00 and R02, 6/2/95 and 8/15/97	Thermal decomposition of rags in inert atmosphere. Off gases removed with caustic scrubber. Caustic is filtered and sent to RLWTF if <EDL.	None
TWCP-3548/ N-13 (UCNI)	C	Process description	Anode Heel Burning; Burning Metal, 434-REC-R00 through R01, 2/6/87 through 1/30/89	Oxidation of the metal heel from electrorefining and preparation of oxide as feed for aqueous recovery.	None
TWCP-3548/ N-14 (UCNI)	C	P/S diagram; process description (P/S BM)	Plutonium Metal Burning; The Burning and Brushing of Plutonium Metal; 433-NMT7, R03; 433-REC-R00 through R03, 9/6/90; 5/13/94 through 8/15/97	Removal of friable plutonium oxide from metal and calcination of the metal.	None
TWCP-3548/ N-15 (UCNI)	C	Process description	Processing Lapping Oil and Similar Organics, 435-REC-R00, 3/1/78; 435-REC-R01, no date	Oils are filtered for Pu recovery. Oils <EDL are absorbed on vermiculite for disposal. Filtered solids are sent to dissolution.	None
TWCP-3548/ N-16 (UCNI)	C	Process description	Evaluation of Pu (VI) Reduction by Nitrous Oxide, 493-REC-R00, no date	Experimental procedure to use nitrous oxide to reduce Pu (VI) to Pu (IV).	Procedure has no approval signatures or date. Assume this procedure was never implemented.
TWCP-3548/ N-17 (UCNI)	C	P/S diagram; chemical list; process description (P/S CR)	Crushing and Pulverizing, 435-REC-R00 through R05, 2/18/87 through 8/25/97	Crushing and pulverizing residues to approximately 20 mesh for dissolution in nitric acid.	None
TWCP-3548/ N-18 (UCNI)	C	Diagram (not P/S); chemical list; process description	Polystyrene Cube Processing, 437-REC-R00 through R02, 1/19/83 through 10/22/84	Plutonium and depleted uranium is recovered from polystyrene plastic using crushing followed by distillation.	None

* Information Category Codes: A = forms intended for use in waste certification, B = data from controlled databases and published documents, C = unpublished data, and D = interviews, memos, and letters

TWCP Record No.	Information Category Code*	Information	Source	Summary	Limitations
Nitrate Dissolution Procedures					
TWCP-3566/ N-19 (UCNI)	C	P/S diagram; chemical list; process description (P/S UPS)	Preferential Dissolution of Uranium Oxides from a Uranium-Plutonium Oxide Mixture, 445-REC-R00 through R03, 3/14/84 through 4/15/92	Calcined residues containing depleted uranium and plutonium are dissolved in nitric acid. The uranium is contained in the filtrate and wash solutions, which are discarded to cement fixation. The insoluble plutonium oxide is then recovered by ion exchange or oxalate precipitation.	None
TWCP-3566/ N-20 (UCNI)	C	P/S diagram; chemical list; process description (P/S ATL)	Advanced Testing Line for Actinide Separations (ATLAS) Unit Operations, 491-REC-R00 through R03; 12/23/91 through 8/25/97	The ATLAS unit was a design and development, pilot plant operation that encompassed all steps of the NO_3 operations.	None
TWCP-3566/ N-21 (UCNI)	C	P/S diagram; chemical list; process description (P/S CPOD)	Catalyzed Electrochemical Plutonium Oxide Dissolver (CEPOD), 490-REC-R00 through R01; 10/10/90 through 10/13/92	Electrochemical dissolution of Pu residues. Silver nitrate was used as a catalyst.	None
TWCP-3566/ N-22 (UCNI)	C	Chemical list; process description	Recovery of Contaminated Platinum, 430-REC-R00, 3/1/78	Recovery of Pu from platinum boats using nitric/hydrofluoric acid.	None
TWCP-3566/ N-23 (UCNI)	C	P/S diagram; chemical list; process description (P/S ED)	Casting Crucible Dissolution, 425-REC-R00 and R01, 1/26/78; Four-Inch Cascading Airlift Dissolvers, 425-REC-R00 through R07, 2/18/87 through 8/15/97	Casting crucible dissolution for plutonium recovery. Dissolution of Pu residues and finely divided materials using the 4" cascading dissolvers.	None

* Information Category Codes: A = forms intended for use in waste certification, B = data from controlled databases and published documents, C = unpublished data, and D = interviews, memos, and letters

TWCP Record No.	Information Category Code*	Information	Source	Summary	Limitations
TWCP-3566/ N-24 (UCNI)	C	P/S diagram; chemical list; process description (P/S SC)	Slag and Crucible Dissolution Procedure; 424-REC-R00, 1/26/78 Dissolution of Sand, Slag, and Crucible in 6-inch Cascade Dissolvers; Six-Inch Cascade Dissolvers, 424-REC-R00 and R03 through R08, 5/18/88 through 8/26/97	Slag and crucible dissolution for plutonium recovery. Later revisions addressed recovery of Pu from residues of sand, slag, and crucible using a 6" cascade dissolver system.	None
TWCP-3566/ N-24A (UCNI)	C	Process description	Pneumatic Salt Crusher, 444-REC-R00, 1/29/90	Salt crusher is used to prepare feed materials for the six-inch cascading dissolver. No chemicals used.	None
TWCP-3566/ N-25 (UCNI)	C	P/S diagram; chemical list; process description (P/S MPD)	Multipurpose Cascade Dissolver System, 489-REC-R00 through R01, 10/04/91 through 9/27/94	Operation of multipurpose cascade dissolver system for processing impure Pu bearing feeds.	None
TWCP-3566/ N-26 (UCNI)	C	Process diagram (not P/S); process description	Alkaline Leach of Chloride Contaminated Plutonium Oxides, 450-REC-R00, 08/21/89	Chloride contaminated Pu oxides are leached using 0.5 M sodium hydroxide to remove chloride contamination.	None
TWCP-3566/ N-26A (UCNI)	C	Process description	Dissolution of High Salt and/or Chloride Contaminated Plutonium Dioxide, 448-REC-R00, 1/6/88	Recovery of plutonium from chlorinated oxide received from Rocky Flats.	This is a hand written, temporary? procedure. It may have been a proposed procedure that was never implemented. No final version of this procedure was found.
TWCP-3566/ N-27 (UCNI)	C	Process description	Distillation of Am IX Column Effluents to Reduce Acidity and Volume, 470-REC-R01, 08/27/84	Distillation of Am ion exchange column effluents to reduce acidity and volume.	None

* Information Category Codes: A = forms intended for use in waste certification, B = data from controlled databases and published documents, C = unpublished data, and D = interviews, memos, and letters

TWCP Record No.	Information Category Code*	Information	Source	Summary	Limitations
TWCP-3566/ N-28 (UCNI)	C	Diagram (not P/S); chemical list; process description, (P/S AL based on description)	Ash Leaching, 423-REC-R00 through R05, 1/26/78 through 9/14/90	Recovery of Pu from on-site and off-site ash by leaching with nitric acid and calcium fluoride.	P/S code of AL assigned based on title and description.
TWCP-3566/ N-29 (UCNI)	C	Diagram (not P/S); chemical list; process description (P/S ML based on description)	Leaching of Contaminated Metals in Nitric Acid, 431-REC-R00 and R01, 10/18/90 through 1/27/94	Recovery of Pu from non-Pu metal pieces by leaching in hot nitric acid – calcium fluoride/hydrofluoric acid.	P/S code of ML assigned based on title and description.
TWCP-3566/ N-30 (UCNI)	C	Process description	Processing of Contaminated Solids, 420-REC-R00 and R01, 01/26/78 through 07/09/84	Processing of contaminated solids for Pu recovery.	None
TWCP-3566/ N-30A (UCNI)	C	Process description	Dissolution of Materials, 440-REC-R00 through R01, 2/25/78 through 12/16/85	Dissolution of metals, alloys, casting skulls and plutonium compounds in nitric acid and hydrofluoric acid. Cr may be in the waste from metals, alloys and skulls.	None
TWCP-3566/ N-30B (UCNI)	C	Chemical list, process description.	Plutonium Metal Dissolution, 441-REC-R00 through R01, 2/25/78 through 3/2/83	Dissolution of plutonium metal and alloys in nitric acid and hydrofluoric acid.	R00 was renewed on 3/2/83. R01 has no approval signatures or date.
TWCP-3566/ N-30C (UCNI)	C	Chemical list, process description.	Dissolution of Oxide Derived from Calcination of Oxalate; Standard Operating Procedure for the Dissolution of Oxide Whose Nitrate Solutions are Destined for the Metal Prep Line; The Dissolution of Plutonium Dioxide Derived from Calcined Plutonium Oxalate, 442-REC-R00 through R02, 2/25/78 through 5/23/84	Dissolution of plutonium dioxide derived from calcined plutonium oxalate in nitric acid and hydrofluoric acid.	None

* Information Category Codes: A = forms intended for use in waste certification, B = data from controlled databases and published documents, C = unpublished data, and D = interviews, memos, and letters

TWCP Record No.	Information Category Code*	Information	Source	Summary	Limitations
TWCP-3566/ N-30D (UCNI)	C	Chemical list, process description.	Dissolution of Oxide Derived from Passivation of Carbides, Metal or Casting Skulls, 443-REC-R00 through R01, 2/25/78 through 8/2/78	Dissolution of plutonium oxides derived from plutonium carbides, anodes, metal or casting skulls that have been passivated in a furnace. The oxides are dissolved in nitric acid and hydrofluoric acid.	None
TWCP-3566/ N-30E (UCNI)	C	Diagram (not P/S), chemical list, process description.	Dissolving Chloride Melt Portion of Electrorefining Residues; Dissolving the Chloride Melt Portion of Salt-Stripping Residue, 444-REC-R00 through R01, 2/25/78 through 9/26/83	Chloride salts from electrorefining are dissolved in sodium hyroxide. Then nitric-hydrofluoric acid is used to dissolve filtered solids. Acid filtrate is sent to ion exchange. Appears to be related to hydroxide cake dissolution.	None
TWCP-3566/ N-30F (UCNI)	C	Chemical list, process description.	Dissolution of Residues for Ion-Exchange Feed; Standard Operating Procedure for the Residue for Ion-Exchange Feed, 447-REC-R00 through R01, 7/13/79 through 6/30/81	Dissolution of plutonium residues from oxide dissolution in nitric acid and hydrofluoric acid.	None
TWCP-3566/ N-31 (UCNI)	C	P/S diagram, chemical list, process description (P/S NC)	Pickling or Surface Leaching, 421-REC-R00 and R01, 1/26/78 through ?; Leaching of Noncombustible Materials in Nitric Acid, 421-REC-R03 through R09, 2/18/87 through 3/27/97	Recovery of Pu from surface contamination of noncombustible material by pickling or surface leaching.	Draft R09 also contains P/S code DO (Dissolution of Oxide)
TWCP-3566/ N-32 (UCNI)	C	P/S diagram; chemical list; process description (P/S HD, CD, HCD)	Dissolution of Chloride Generated Cake in Nitric Acid; Dissolution of Pu Hydroxide Cake in Nitric Acid, 442-REC-R00 through R03, 11/14/88 through 01/16/97	Dissolution of Pu hydroxide cake from chloride operations in nitric acid.	None

* Information Category Codes: A = forms intended for use in waste certification, B = data from controlled databases and published documents, C = unpublished data, and D = interviews, memos, and letters

TWCP Record No.	Information Category Code*	Information	Source	Summary	Limitations
TWCP-3566/ N-33 (UCNI)	C	P/S diagram; chemical list; process description (P/S MELL)	Mediated Electro-Oxidation of Low-Level Organic Waste (formerly Catalyzed Electrochemical Plutonium Oxide Dissolver), 490-REC-R02, 9/26/94	Mediation electro-oxidation of low-level organic waste (MELLOW) uses cobalt nitrate or cerium nitrate as a catalyst to recover Pu from cellulose-based material.	None
TWCP-3567/ N-34 (UCNI)	C	Chemical list; process description	Silica Removal from Americium Feed Solutions, 468-REC-R00 and R01, 10/06/83 through 11/29/83	Silica removal from Am feed solution.	None
TWCP-3567/ N-35 (UCNI)	C	Diagram (not P/S); chemical list; process description	Residue Leaching, 426-REC-R00, 2/27/87	Removal of SiO_2 from solid residues by hydrofluorination to recover Pu.	None
TWCP-3567/ N-36 (UCNI)	C	P/S diagram; chemical list; process description (P/S AT)	Incinerator Ash R&D Facility, 427-REC-R00, 8/22/88	Incinerator ash R&D facility for processing of incinerator ash from Los Alamos and Rocky Flats.	None
TWCP-3567/ N-37 (UCNI)	C	P/S diagram; chemical list; process description (P/S SP)	Dissolution of Filter Residues and Glovebox Sweepings in Hot HNO3-HF; Dissolution of Filter Residues, Impure Oxide, and Glovebox Sweepings, 446-REC-R00 through R06, 2/3/89 through 3/27/97	Plutonium recovery from residues using nitric acid with a fluoride catalyst.	None
TWCP-3567/ N-37A (UCNI)	C	P/S diagram, chemical list, process description (P/S OD and SP)	Dissolution of Impure Plutonium Dioxides, Filter Residues, and Glovebox Sweepings in Hot HNO3-HF, 447-REC-R02, 12/18/86	Plutonium recovery from residues using nitric acid with a fluoride catalyst.	P/S diagrams were added via memo on 1/28/85 and 2/13/87. Appears as though P/S diagrams were not finalized.

* Information Category Codes: A = forms intended for use in waste certification, B = data from controlled databases and published documents, C = unpublished data, and D = interviews, memos, and letters

TWCP Record No.	Information Category Code*	Information	Source	Summary	Limitations
TWCP-3567/ N-38 (UCNI)	D	LANL policy on RCRA F-codes	Interview with Pam Rogers and Alice Barr	Solvent F-codes will apply to all waste streams generated from a processing an intermediate product once solvents are identified in that process.	None
TWCP-3567/ N-39 (UCNI)	D	RCRA codes associated with hydroxide cakes.	Interview with Jim Foxx of TA-55	RCRA codes associated with hydroxide cakes from the chloride process that are fed into the nitrate process.	None
TWCP-3567/ N-40 (UCNI)	B	RCRA codes associated with hydroxide cakes from chloride operations that are fed to the nitrate operations at the dissolution step.	Acceptable Knowledge Summary for the TA-55 Chloride Operations	Description of the chloride operations and wastes generated based on review of historic operation procedures from the plutonium facility at TA-55.	None
Nitrate Ion Exchange Procedures					
TWCP-3567/ N-41 (UCNI)	C	Diagram (not P/S); chemical list; process description (P/S RCM)	Nitrate Anion Exchange for the Rich Column Material System, 472-REC-R00, 2/02/90	Nitrate anion exchange for the rich column material.	None
TWCP-3567/ N-42 (UCNI)	C	P/S diagram; chemical list; process description (P/S LR)	Nitrate Anion Exchange for the Lean Residue System, 471-REC-R00 through R02, 1/29/90 through 3/22/93	Nitrate anion exchange for the lean residue system to recover and purify Pu to weapon's grade specifications for storage as an oxide.	None
TWCP-3567/ N-43 (UCNI)	C	Diagram (not P/S); chemical list; process description (P/S RR)	Nitrate Anion Exchange for the Rich Residues Ion Exchange Column, 470-REC-R00, 11/22/89	Pu eluate solution from the ion exchange process is precipitated as an oxalate. The Pu oxalate is calcined to an oxide.	None
TWCP-3567/ N-44 (UCNI)	C	Diagram (not P/S); chemical list; process description	Nitrate Anion Exchange, 461-REC-R00 through R02, 2/25/78 through 11/29/88	Nitrate anion exchange utilizing an anion exchange resin in nitric acid that retains the nitrato complex of Pu (IV) over most cationic impurities.	None

* Information Category Codes: A = forms intended for use in waste certification, B = data from controlled databases and published documents, C = unpublished data, and D = interviews, memos, and letters

TWCP Record No.	Information Category Code*	Information	Source	Summary	Limitations
TWCP-3567/ N-45 (UCNI)	C	P/S diagram, chemical list, process description (P/S RFX LR DS)	Nitrate Anion Exchange [for the Dissolved Solids (DS) System], 473-REC-R00 through R06, 10/17/89 through 7/24/98	Nitrate anion exchange process in general. The procedure starts out describing only the dissolved solids system and changes to a general description of nitrate anion exchange.	None
TWCP-3567/ N-46 (UCNI)	C	Chemical list; process description	Procedure for Eluting Plutonium From Ion Exchange Columns, 473-REC-R00 and R01, 8/15/79 through 12/2/82	Recovery of accountable amounts of Pu by eluting the Pu from the ion exchange columns used in Am production.	None
TWCP-3567/ N-47 (UCNI)	C	P/S diagram; chemical list; process description (P/S RFX)	Nitrate Anion Exchange for the Rich-Feed Ion-Exchange System, 495-REC-R00 and R01, 4/29/92 through 12/15/93	Nitrate anion exchange for the rich-feed ion exchange system.	None
TWCP-3567/ N-48 (UCNI)	C	Process description	Alternate Procedure for Conversion of Plutonium Oxalate to Oxide; Conversion of Plutonium Oxalate to Oxide Using Heat Lamp and Hot Plate, 477-REC-R00 through R02, 2/03/81 through 5/14/87	Pu oxalate is converted to an oxide by heating with a heat lamp and hot plate.	None
TWCP-3567/ N-50 (UCNI)	C	P/S diagram; chemical list; process description (P/S OY)	Oxalate Precipitation of Nitrate Solutions, 479-REC-R00 through R03, 4/30/81 through 2/14/89	The feed for this precipitation process comes from the nitrate dissolution of relatively pure on-site and off-site oxides.	None
TWCP-3567/ N-51 (UCNI)	C	P/S diagram; chemical list; process description (P/S LR, DS, RCM, RR)	Oxalate Precipitation and Calcination of Ion-Exchange Elutes, 466-REC-R00 through R03, 2/25/78 through 6/15/89	Pu in ion exchange elutes are precipitated as an oxalate and the oxalate is calcined to an oxide. This operation feeds P/S OY.	None
TWCP-3567/ N-51A (UCNI)	C	Process description	Calcination; Hydrocalcination, 437-REC-R00 through R01, 3/5/87 through 2/13/89	Wet plutonium oxalate cake is burned in a furnace and converted to plutonium oxide.	None

* Information Category Codes: A = forms intended for use in waste certification, B = data from controlled databases and published documents, C = unpublished data, and D = interviews, memos, and letters

TWCP Record No.	Information Category Code*	Information	Source	Summary	Limitations
TWCP-3567/ N-52 (UCNI)	C	P/S diagram; chemical list, process description (P/S PR)	Peroxide Precipitation, 480-REC-R00 and R01, 1/21/87 to 2/14/89	Separation of Pu from catatonic impurities with the use of hydrogen peroxide for precipitation of the Pu.	None
TWCP-3567/ N-53 (UCNI)	C	Diagram (not P/S); chemical list; process description	Peroxide Precipitation, 464-REC-R00 and R01, 2/25/78 through ?	Separates Pu from cationic impurities such as Ca, Cr, Mg, Ce, Co, Al, and Am by peroxide precipitation	None
TWCP-3567/ N-54 (UCNI)	C	Diagram (not P/S); chemical list; process description	Thorium Fluoride Precipitation, 468-REC-R00 and R01, 1/26/78 through ?	Separates thorium from Pu by forming the insoluble ThF_4 precipitate.	None
TWCP-3567/ N-55 (UCNI)	C	P/S diagram; chemical list; process description (P/S OH)	Procedure for Americium Hydroxide Precipitation and Filtration ; Filtration of Caustic-Treated Peroxide Filtrates, 469-REC-R00 through R03, 8/15/79 through 12/19/86	Am recovery from the filtrate which results from the precipitation of Pu peroxide in the FFTF Oxide Production Process. Filtration of caustic-treated peroxide filtrates. These solutions are generated with the peroxide filtrate solutions and are dripped in to a caustic solution to destroy peroxide.	None
TWCP-3567/ N-56 (UCNI)	C	Process description	Homogenization of Plutonium Oxide Product by Auger Mixing, 432-REC-R00, 02/14/89	Homogenization of PuO_2 by auger mixing.	None
TWCP-3567/ N-57 (UCNI)	C	P/S diagram; process description (P/S RB and RBJ)	Oxide Roasting and Blending, 433-REC-R00 through R01, 1/28/87 through 1/30/89	Assayed oxide from the vault is blended, sintered, reblended and sampled. This material is then used as feed for Pu metal production or direct oxide reduction. Pu metal may also be burned to an oxide.	None

* Information Category Codes: A = forms intended for use in waste certification, B = data from controlled databases and published documents, C = unpublished data, and D = interviews, memos, and letters

TWCP Record No.	Information Category Code*	Information	Source	Summary	Limitations
TWCP-3567/ N-57A (UCNI)	C	P/S diagram; process description (P/S RBJ)	Roasting and Blending JR., 443-REC-R00 and 443-REC-R02, 1/30/89 through 10/30/89	Pu oxide is reburned, sieved, blended, and sampled.	None
TWCP-3567/ N-57B (UCNI)	C	P/S diagram; process description (P/S RBJ, RB)	Roasting and Blending JR., 434-NMT7-R00, 3/6/92; 434-NMT7-R03, 3/3/93; 434-REC-R00 (Draft and Final) through 434-REC-R02, 4/15/94 through 8/15/97	Pu oxide is reburned, sieved, blended, and sampled.	None
TWCP-3567/N-59 (UCNI)	C	Process description (P/S DS and RR)	Sampling Procedure for the Ion-Exchange Process – DS and RR, 417-GEN-R00 and R01, 4/17/86 through 1/23/89	Collecting samples of nitrate solutions to determine plutonium content and determine which ion exchange process should be used for recovery	None
Nitrate Evaporator Procedures					
TWCP-3568/ N-61 (UCNI)	C	P/S diagram; chemical list; process description (P/S EV)	Treatment of Evaporator Bottoms, 485-REC-R00 through R02, 7/13/84 through 2/09/89	Treatment of evaporator bottoms generated from the volume reduction of feed from ion exchange columns. The reduced solution goes to cement fixation and the salts are discarded.	None
TWCP-3568/ N-62 (UCNI)	C	P/S Diagram; process description (P/S EV)	Computer Operated Nitric Acid Volume Reduction & Treatment of Evaporator Bottoms, 485-REC-R00 through R03, 10/4/89 through 8/31/95	Computer operated nitric acid volume reduction and treatment of evaporator bottoms.	None
TWCP-3568/ N-63 (UCNI)	C	P/S diagram; process description (P/S EV)	Nitric Acid Process Evaporator, 485-REC-R04 and R05, 11/20/96 through 9/9/97	Evaporation process for reducing the volume of process-generated nitric acid/salt mixtures.	None

* Information Category Codes: A = forms intended for use in waste certification, B = data from controlled databases and published documents, C = unpublished data, and D = interviews, memos, and letters

TWCP Record No.	Information Category Code*	Information	Source	Summary	Limitations
TWCP-3568/ N-64 (UCNI)	C	P/S diagram; chemical list process description (P/S EV)	Process Nitric Acid Volume Reduction, 484-REC-R00 through R02, 10/5/84 through 3/15/90	Nitric acid volume reduction by processing ion exchange effluent through an evaporator.	None
TWCP-3568/ N-65 (UCNI)	C	Chemical list; process description	Volume Reduction of Nitrate Feed Solutions Using a Mini-Evaporator, 496-REC-R00, 10/23/95	Operation of the mini-evaporator to reduce the volume of nitrate feed solutions.	None
TWCP-3568/ N-66 (UCNI)	B	RCRA-codes for evaporator bottoms	Development of Control Charts for the Evaporator Bottoms Newly Generated Waste Stream from TA-55, 3/19/99	Based on the development of control charts for analytical results, evaporator bottoms were determined to be hazardous for chromium, lead, and mercury.	None
Nitrate Cement Fixation Procedures					
TWCP-3568/ N-67 (UCNI)	C	Process description (P/S CF)	Auxiliary Activities for Cement Fixation, TRU-NMT2-DP11-R00 (Draft), 04/13/94	Auxiliary activities for cement fixation, such as preparing the 55-gallon drum, attaching and detaching drums from glovebox, and filing the cement hopper.	None
TWCP-3568/ N-68 (UCNI)	C	Process description (P/S CF)	Calibration of the pH Electrode for Cement Fixation, TRU-NMT2-DP-06-R00, no date	Calibration and maintenance of pH electrodes used to measure the pH of waste solutions as part of the CF process.	None
TWCP-3568/ N-69 (UCNI)	C	P/S Diagram; chemical list; process description (P/S CF)	Cement Fixation of Process Residues in 55-Gallon Drums, TRU-NMT2-DP-04, R00; TRU-NMT7-DP-04, R01 and R02; TRUWM-TA55-DP-04-R00 (Draft), 8/6/93 through 06/21/94	Cement fixation of liquid and particulate process residues in 55-gallon drums.	None

* Information Category Codes: A = forms intended for use in waste certification, B = data from controlled databases and published documents, C = unpublished data, and D = interviews, memos, and letters

TWCP Record No.	Information Category Code*	Information	Source	Summary	Limitations
TWCP-3568/ N-70 (UCNI)	C	P/S Diagram; Process; description (P/S CF)	Certification of Waste for Cement Fixation, TRU-NMT2-DP-12, R00; Certifying Waste for Cement Fixation, TRUWM-TA55-DP-12-R00; 4/20/93 through 7/10/97	Describes how TA-55 personnel ensure waste destined for CF are properly characterized, accounted for, and documented.	None
TWCP-3568/ N-71 (UCNI)	C	Process description (P/S CF)	Documentation for Cement Fixation, TRU-NMT2-DP-14, R00 and R01; TRUWM-TA55-DP-14-R00; 3/04/93 through 7/10/97	Documentation for cement fixation. Describes completing the paperwork and assembling the data package that is required to accompany each drum destined for WIPP.	None
TWCP-3568/ N-72 (UCNI)	C	Chemical list; process description (P/S CF)	Cement Fixation of Process Residues in One-Gallon Cans, TRU-MST12-DP-03, R00, 04/27/87	Process residue TRU waste at TA-55 immobilized for compliance with WIPP WAC.	None
TWCP-3568/ N-73 (UCNI)	C	Diagram (not P/S); chemical list; process description	Scrubber System for Cement Fixation Operations, 483-REC-R00, 01/30/89	Operation of the nitric acid scrubber system to prevent the premature replacement of HEPA filters used in cementing operations.	None
TWCP-3568/ N-74 (UCNI)	C	Chemical list; process description (P/S CF)	Organic Liquid Emulsification, TRU-NMT2-DP-13, R00; TRUWM-TA55-DP-13-R00; 8/30/93 through 9/30/94	Emulsifying waste oil and other organic liquids for cement fixation.	None
General Documents Applicable to the Nitrate Process					
TWCP-3568/ N-76 (UCNI)	D	Comments on draft Nitrate Process AK Report	Interview with Tim Hayes of TA-55 Nitrate Operations, 1/4/00	Clarifications on various aspects of the Nitrate process, including P/S codes, time periods for P/S codes and specific operations, and appropriate terminology.	None

* Information Category Codes: A = forms intended for use in waste certification, B = data from controlled databases and published documents, C = unpublished data, and D = interviews, memos, and letters

TWCP Record No.	Information Category Code*	Information	Source	Summary	Limitations
TWCP-3568/ N-77 (UCNI)	D	Additional P/S diagrams assigned to Nitrate Process	Memo from Jim Foxx of TA-55, 1/17/2000	P/S diagrams and codes assigned to Nitrate Operations by TA-55 personnel.	The diagrams are provided as "stand-alone" pieces of information. There are no procedures associated with these diagrams and so chemical use, process description, and applicability to the nitrate process can not be established.
TWCP-3568/ N-79 (UCNI)	C	Clarification of information for all processes within the nitrates operations	Comments from Tim Hayes and Jim Foxx on the Acceptable Knowledge Summary for TA-55 Nitrate Operations, 2/25/00	Details provided for all processes within the nitrates operations.	None
TWCP-3568/ N-81 (UCNI)	C	Process descriptions, RCRA constituents, dates of generation, waste disposition (various P/S codes)	Nitrate Acceptable Knowledge Report forms completed by SMEs Tim Hayes and Jim Foxx	General process descriptions, RCRA constituents, dates of generation, and waste disposition for P/S codes without procedures.	Procedures do not exist for these P/S codes. This information is based on SME knowledge.
TWCP-3568/ N-82 (UCNI)	D	Clarification of specific processes within the Nitrates operations	Jim Foxx, SME, response to comments received on the Acceptable Knowledge Summary for TA-55 Nitrate Operations, 2/25/00	Resolutions to the questions and issues raised by Pam Rogers during her review of the Acceptable Knowledge Summary for TA-55 Nitrate Operations, 2/25/00	Information is based on SME knowledge.
TWCP-3568/ N-83 (UCNI)	D	Clarification of policy on assigning EPA HWNs to D-listed constituents in TRU waste streams.	Pam Rogers, email to John Musgrave, "Re: A Few Issues," 4/11/00.	All TRU waste streams containing RCRA D-listed hazardous constituents will be assigned the applicable D-code(s) unless analytical data or other acceptable information demonstrates that the concentration of the constituent is below the regulatory limit. The text will establish the caveat that the D-code can be revised (removed) based on obtaining additional information.	This policy is contrary to the WIPP WAP; however, the policy allows revisions to D-code assignments based on additional information obtained.

* Information Category Codes: A = forms intended for use in waste certification, B = data from controlled databases and published documents, C = unpublished data, and D = interviews, memos, and letters

TWCP Record No.	Information Category Code*	Information	Source	Summary	Limitations
TWCP-3568/ N-84 (UCNI)	D	Leaching equipment may result in chromium, cadmium, and/or lead being in the solution. Text regarding ensuring that incompatible waste is not packaged together is provided.	Rosemary Glenn, email to Karen Chandler, "Re: Chromium," 6/8/00 and John Musgrave, email to Karen Chandler, "Re: Light Bulb!" 6/14/00. This email conveys information received from John Musgrave and Pam Rogers.	Processes that leach equipment may have chromium, cadmium, and/or lead in the solutions from stainless steel, shielding, and other metal feed materials. TA-55 runs a DOT incompatibility analysis on waste being sent to TA-54.	
TWCP-3730 (UCNI)	B	Pyrophoricity characterization	Characterization of Direct Oxide Salts (LA-CP-95-0098)	Hydrogen generation and pyrophoricity of DOR salts. Also gives reference for MSE, ER, and Cr-containing salts.	None
TWCP-3731	D	Sodium pyrophoricity in pyrochemical salts	Memo (MST-12-ARO-88-052)	Treatment of sodium in salts is effective	Sodium only
TWCP-3732	C	Experimental data on calcium pyrophoricity in salts	Memo (MST-12-ARO-88-077)	Treatment of calcium in salts is effective	Calcium only
TWCP-3943	B	Procedure for Waste Management at TA-55	TA-55 Document, 406-GEN-R00	Contains information on waste management procedures in 1978	None, but doesn't address today's waste management concerns
TWCP-4100	D	Information on P/S/ code VP2	Nitrate AK report form completed by SME Jim Foxx, and corrected on 09/26/00	General process description, RCRA constituents, time line, and waste disposition	Procedures do not exist for these P/S codes. This information is based on SME knowledge
TWCP-4162	D	Answers to questions about P/S codes PB, PuBe, CC, MB, MS, FF, BF, and other issues	Interview with Jim Foxx, 10/12/00	Answers to questions on use of asbestos at TA-55, non-defense activities, and specific P/S codes in chloride operations.	None
TWCP-4164	D	Answers to questions about various P/S codes	Interview with Jim Foxx, 10/16/00	Answers to questions on use of Ag, disposal of ash and resins, and use of gases.	None

* Information Category Codes: A = forms intended for use in waste certification, B = data from controlled databases and published documents, C = unpublished data, and D = interviews, memos, and letters

TWCP Record No.	Information Category Code*	Information	Source	Summary	Limitations
TWCP-4166	D	Answers to questions about P/S codes DO, EV, HP, CF, OR, RM, PY	Interview with Jim Foxx, 10/17/00	Answers to questions on use of Cr and Ag, RCRA metals in cement, asbestos in furnaces and gloves, and disposal of spray cans used in gloveboxes.	None
TWCP-4167	D	Answers to questions about segregation of non-defense wastes; leachability of Ag from ash	Interview with Jim Foxx, 10/18/00	Segregation of non-defense wastes began on 27 August 1998; analytical data show that Ag in ash is below limits of regulatory concern	None
TWCP-4720	B	Describes the procedure to be taken at TA-55 in the event of a misfire or unconsumed explosives (from the Impact Test Facility 40-mm gun, P/S codes ITF and ITF4) to ensure that explosives do not enter the waste stream	40-mm Powder Breech Project Waste Management Plan, Rev. 2 (issued March 27, 2000)	Procedure to be taken at TA-55 in the event of a misfire or unconsumed explosives (from the Impact Test Facility 40-mm gun) to ensure that explosives do not enter the waste stream	Does not appear to be a controlled document. Without revision history, cannot tell when this document was first issued, and how the potential for unconsumed explosives was addressed when the Impact Test Facility (ITF) began in 1996
TWCP-5164	D	Sources of Cs-137 and Pa-231 in TA-55 TRU waste	Interview with Jim Foxx (TA-55 SME) on April 2, 2001	Plutonium operations never handled Cs-137 or Pa-231 in any of the Pu processing areas at TA-55. However, Cs-137 is expected to be present in the wastes because it is a fission product of several Pu isotopes. Pa-231 is expected to be present (as a function of the age of the waste) because it is a decay chain daughter of Pu-239 and U-235.	None

* Information Category Codes: A = forms intended for use in waste certification, B = data from controlled databases and published documents, C = unpublished data, and D = interviews, memos, and letters

TWCP Record No.	Information Category Code*	Information	Source	Summary	Limitations
TWCP-5165	D	Sources of Cs-137, Pa-231, and Cm-244 in TA-55 TRU waste	Interview with Jim Foxx (TA-55 SME) on April 11, 2001	Dominant source of Cs-137 expected to be due to residual contamination from original separation of Pu from production fuel. Cm-244 introduced in P/S code DOP starting in 1988, but could also show up after that date in IS, WE, CA and CF.	None
TWCP-5371	D	Source and processing of HRA materials	Interview with Jim Foxx (TA-55 SME) on April	HRA refers to process residues sent from Hanford Reservation to TA-55 for plutonium recovery. This material was sent through nitrate operations but its waste was tracked by its source code (HRA) instead of the P/S code in which the waste was generated. To be conservative, all HWNs that are applicable to P/S codes in nitrate operations (other than the cementation processes CF and HP) are also applied to wastes from HRA. These HWNs are D005, D006, D007, D008, D009, and D011.	None
TWCP-AK-2.1-002,R.2	A	*Process Acceptable Knowledge Report for Chloride Operations at TA-55*	Generators interview and TWCP AK references	Detailed information on each P/S code for chloride operations at TA-55	None
TWCP-AK-2.1-003,R.2	A	*Process Acceptable Knowledge Report for Metal Operations at TA-55*	Generators interview and TWCP AK references	Detailed information on each P/S code for metal operations at TA-55	None

* Information Category Codes: A = forms intended for use in waste certification, B = data from controlled databases and published documents, C = unpublished data, and D = interviews, memos, and letters

TWCP Record No.	Information Category Code*	Information	Source	Summary	Limitations
TWCP-AK-2.1-004,R.2	A	*Process Acceptable Knowledge Report for Miscellaneous Operations at TA-55*	Generators interview and TWCP AK references	Detailed information on each P/S code for miscellaneous operations at TA-55	None
TWCP-AK-2.1-006,R.2	A	*Process Acceptable Knowledge Report for Pyrochemical Operations at TA-55*	Generators interview and TWCP AK references	Detailed information on each P/S code for pyrochemical operations at TA-55	None
TWCP-AK-2.1-007,R.2	A	*Process Acceptable Knowledge Report for Special Processing Operations at TA-55*	Generators interview and TWCP AK references	Detailed information on each P/S code for special processing operations at TA-55	None
TWCP-PLAN-0.2.7-001,R.5	C	*Los Alamos National Laboratory Transuranic Waste Characterization AK Information Summary*	LANL TA-55 waste management database, LANL TA-54 TRU waste management database, and TWCP AK reference base on generator's original data	Detailed information on each waste drum and waste stream	None

* Information Category Codes: A = forms intended for use in waste certification, B = data from controlled databases and published documents, C = unpublished data, and D = interviews, memos, and letters

MAP OF LANL

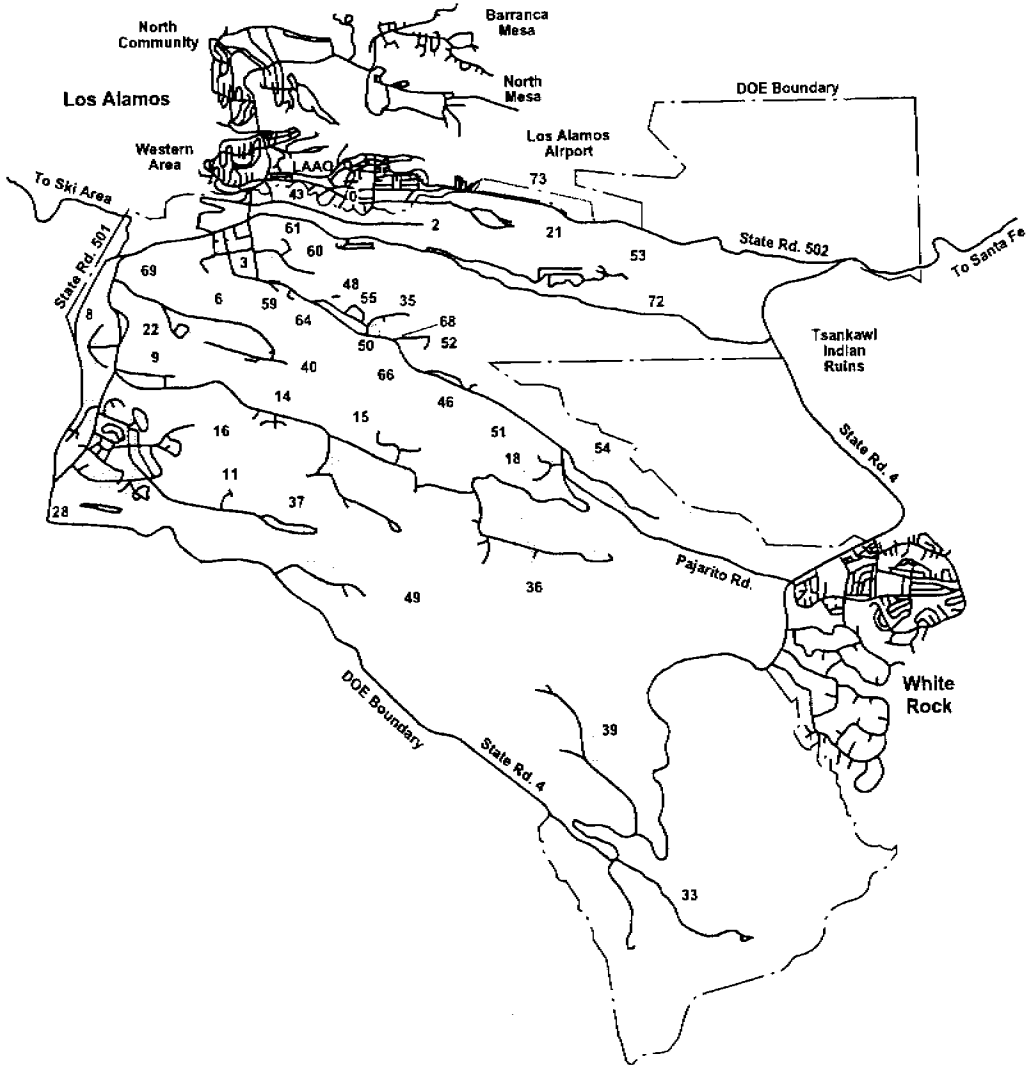

Technical Area Locations

TA-0	Unassigned Land Reserve
TA-2	Omega Site
TA-3	South Mesa Site
TA-5	Beta Site
TA-6	Two Mile Mesa Site
TA-8	Anchor Site West
TA-9	Anchor Site East
TA-11	K-Site
TA-14	Q-Site
TA-15	R-Site
TA-16	S-Site
TA-18	Pajarito Laboratory
TA-21	DP-Site
TA-22	TD-Site
TA-28	Magazine Area A
TA-33	HP-Site
TA-35	Ten Site
TA-36	Kappa Site
TA-37	Magazine Area C
TA-39	Ancho Canyon Site
TA-40	DF-Site
TA-41	W-Site
TA-43	Health Research Lab & DOE Headquarters
TA-46	WA-Site
TA-48	Radiochemistry Site
TA-49	Frijoles Mesa Site
TA-50	Waste Management Site
TA-51	Radiation Exposure Facility
TA-52	Reactor Development Site
TA-53	Meson Physics Facility
TA-54	Waste Disposal Site
TA-55	Plutonium Facility Site
TA-57	Fenton Hill Site
TA-58	Two Mile North Site
TA-59	OH-Site

MAP OF TA-55

Note: The Plutonium Facility, Building PF-4, is labeled PF-4 on this map.

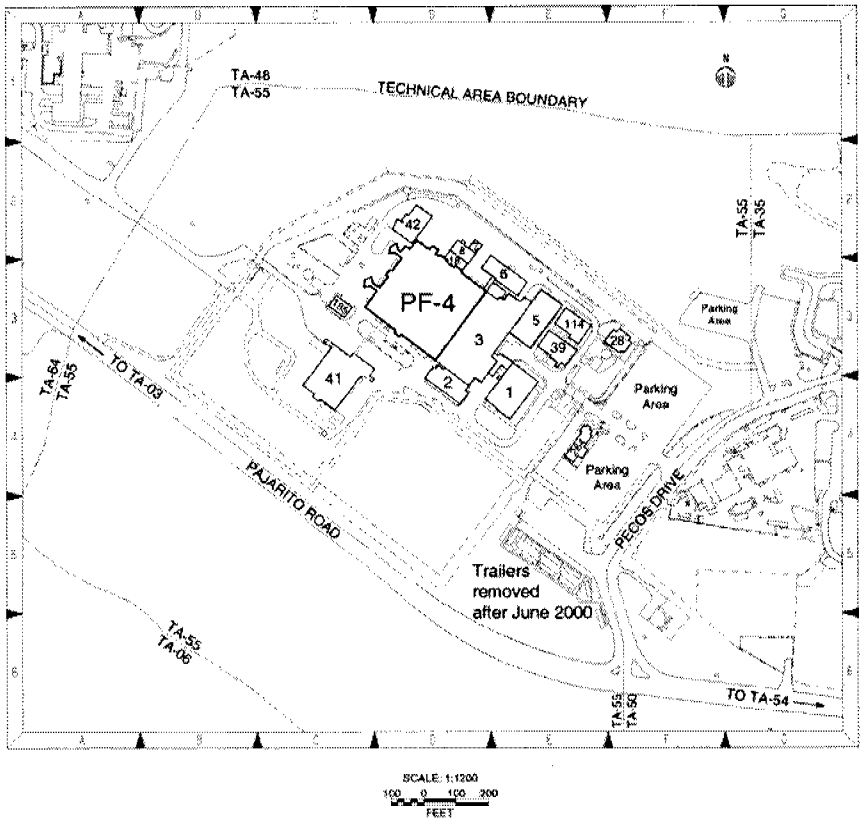

TIMELINE FOR NITRATE OPERATIONS

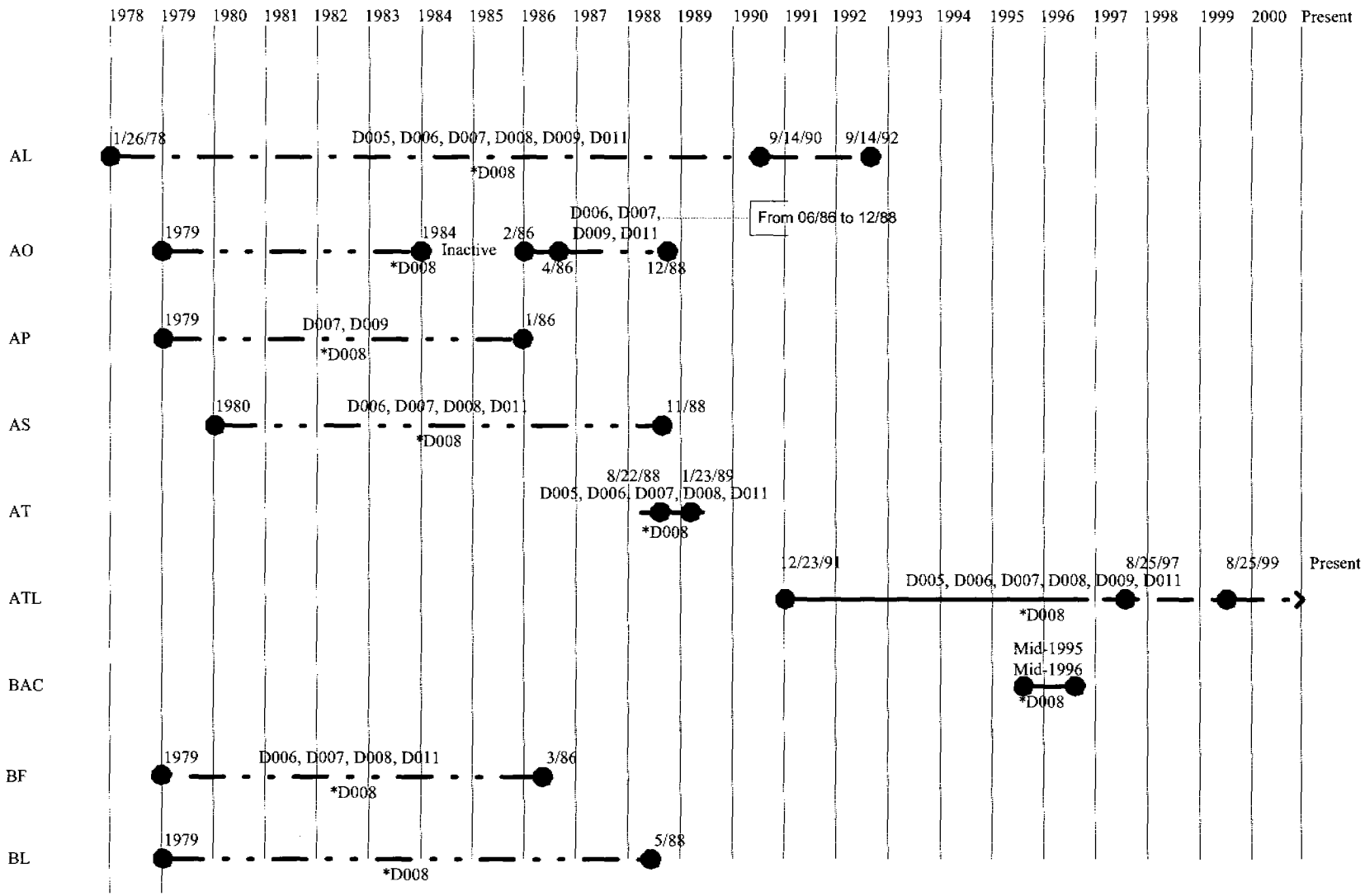

TIMELINE FOR NITRATE OPERATIONS (continued)

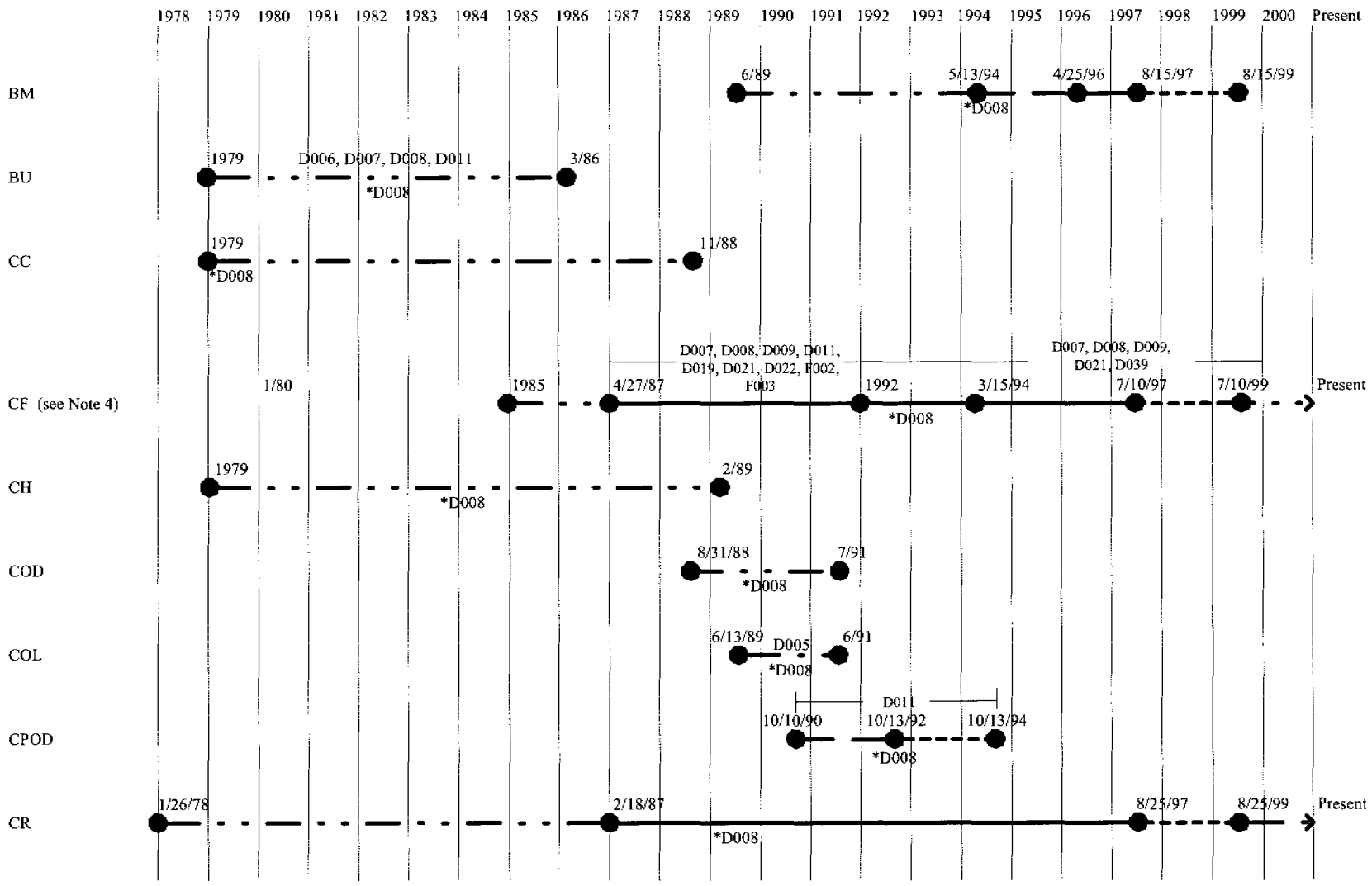

TIMELINE FOR NITRATE OPERATIONS (continued)

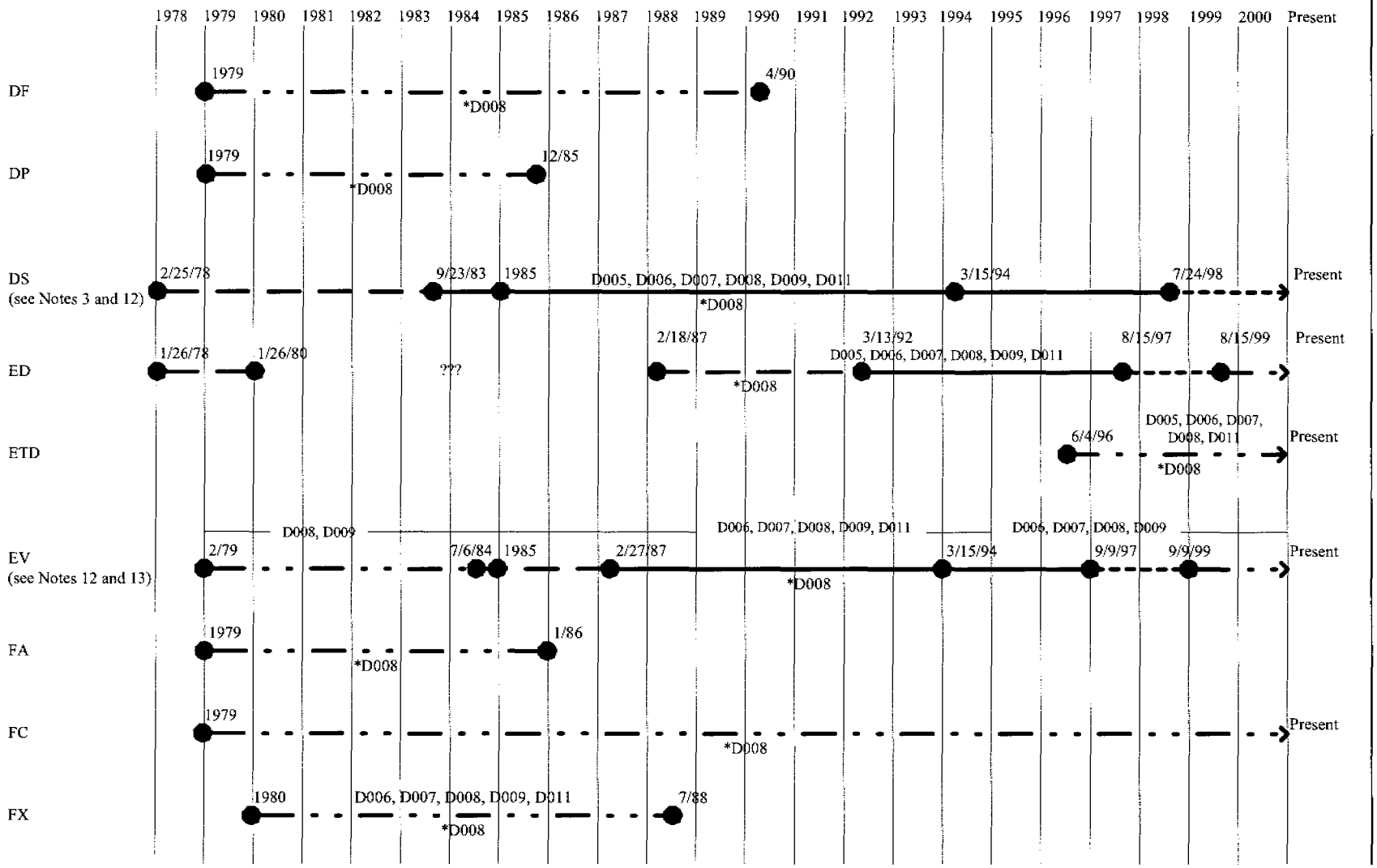

TIMELINE FOR NITRATE OPERATIONS (continued)

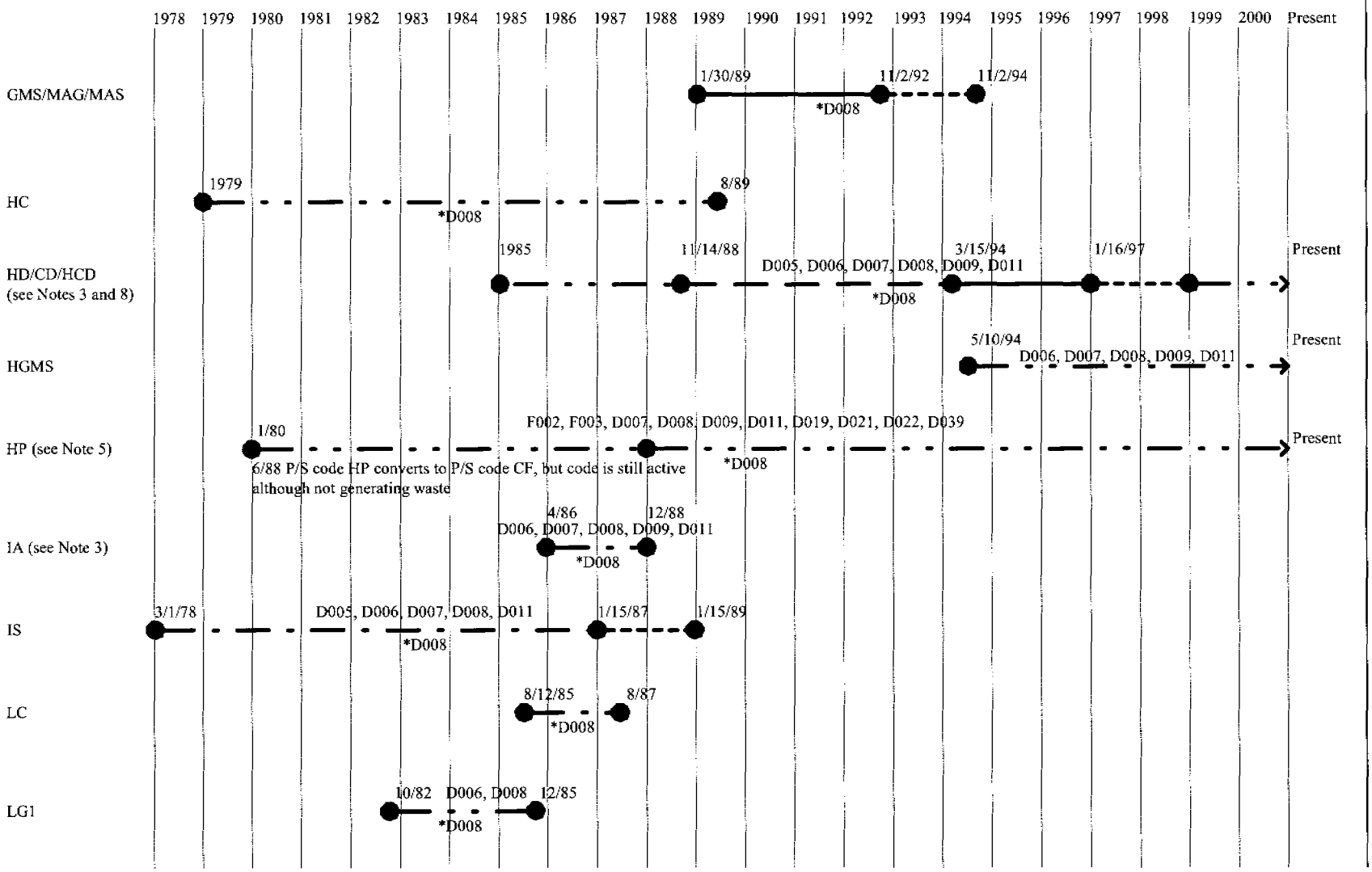

TIMELINE FOR NITRATE OPERATIONS (continued)

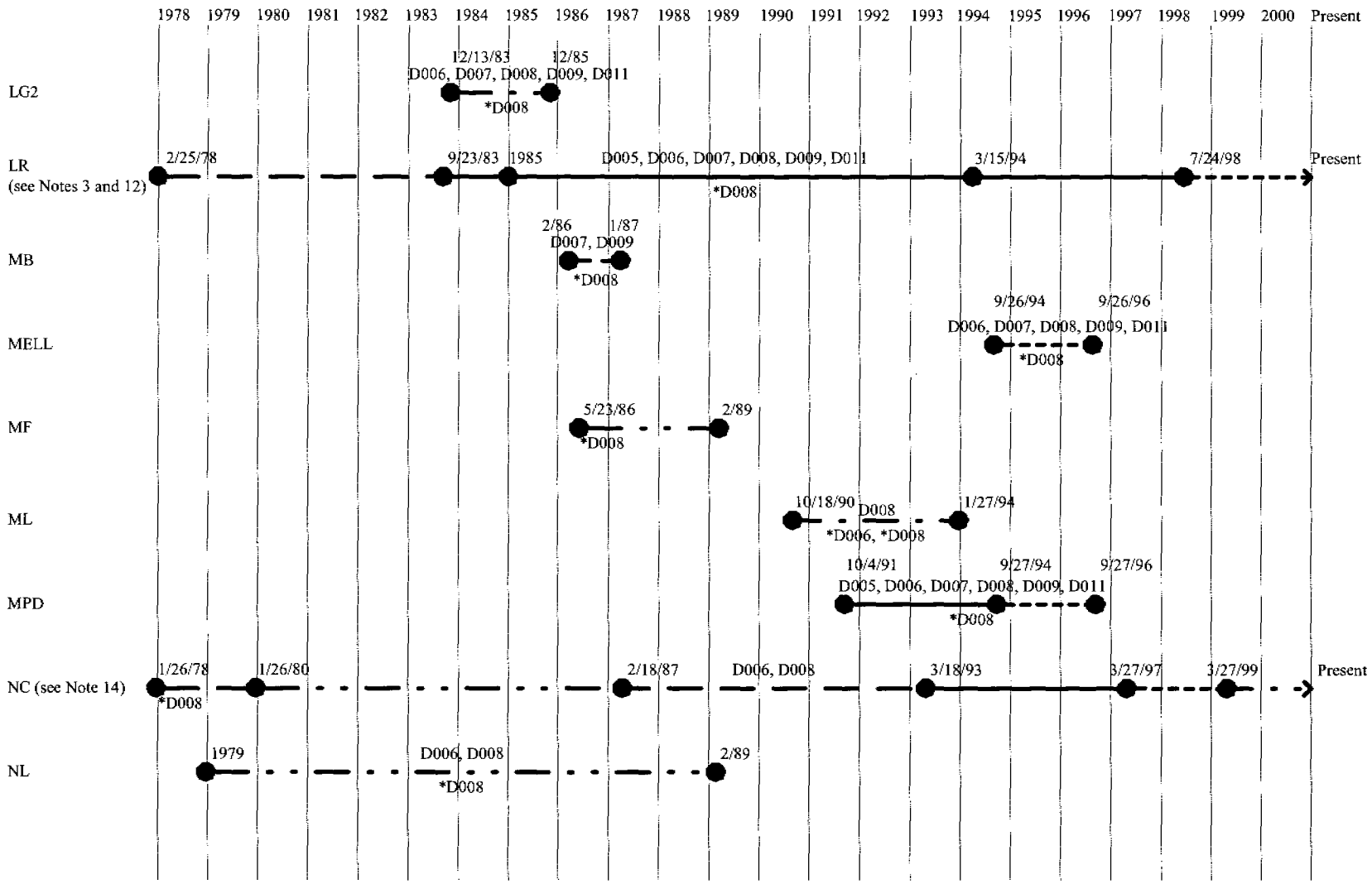

TIMELINE FOR NITRATE OPERATIONS (continued)

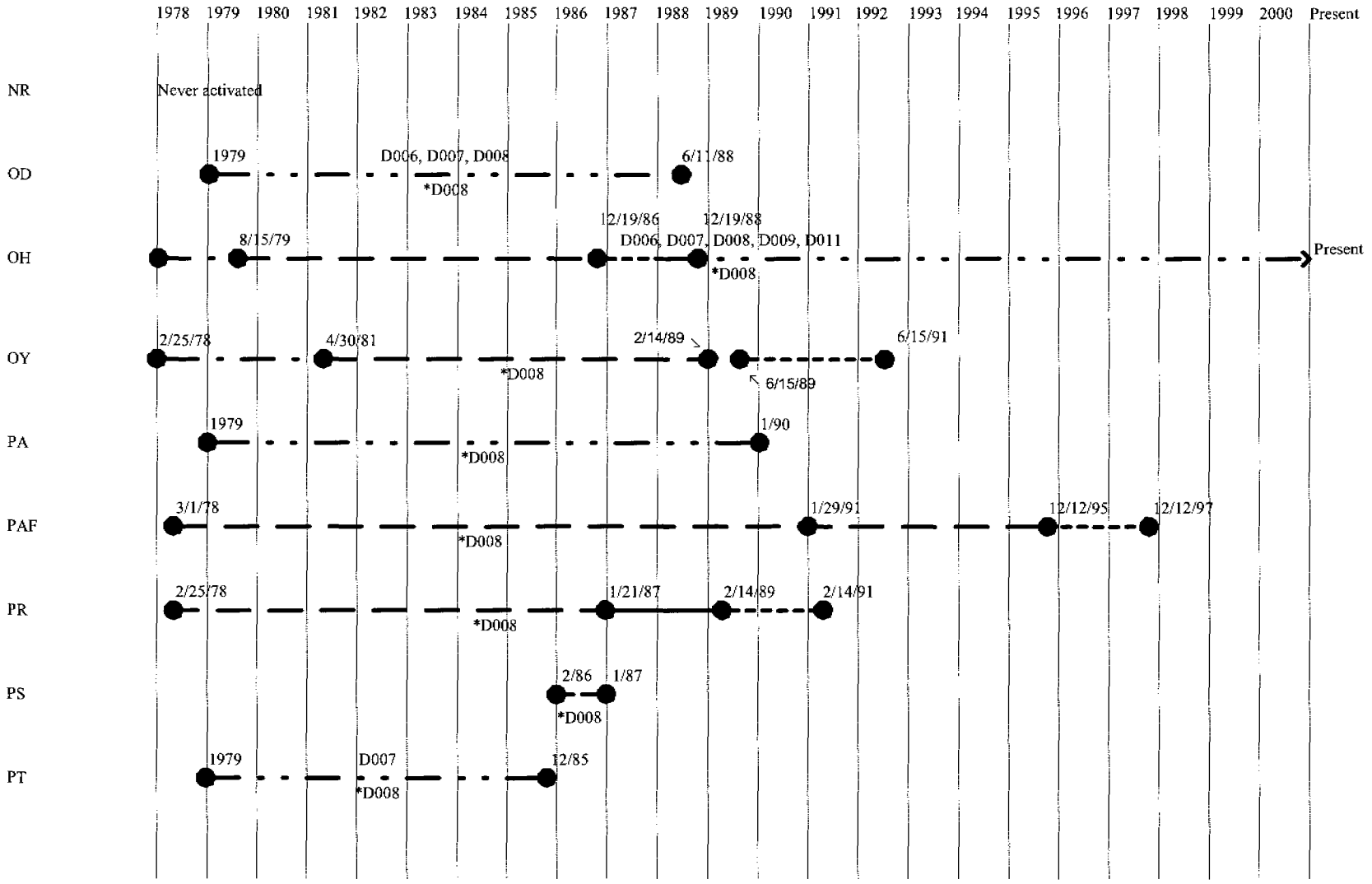

TIMELINE FOR NITRATE OPERATIONS (continued)

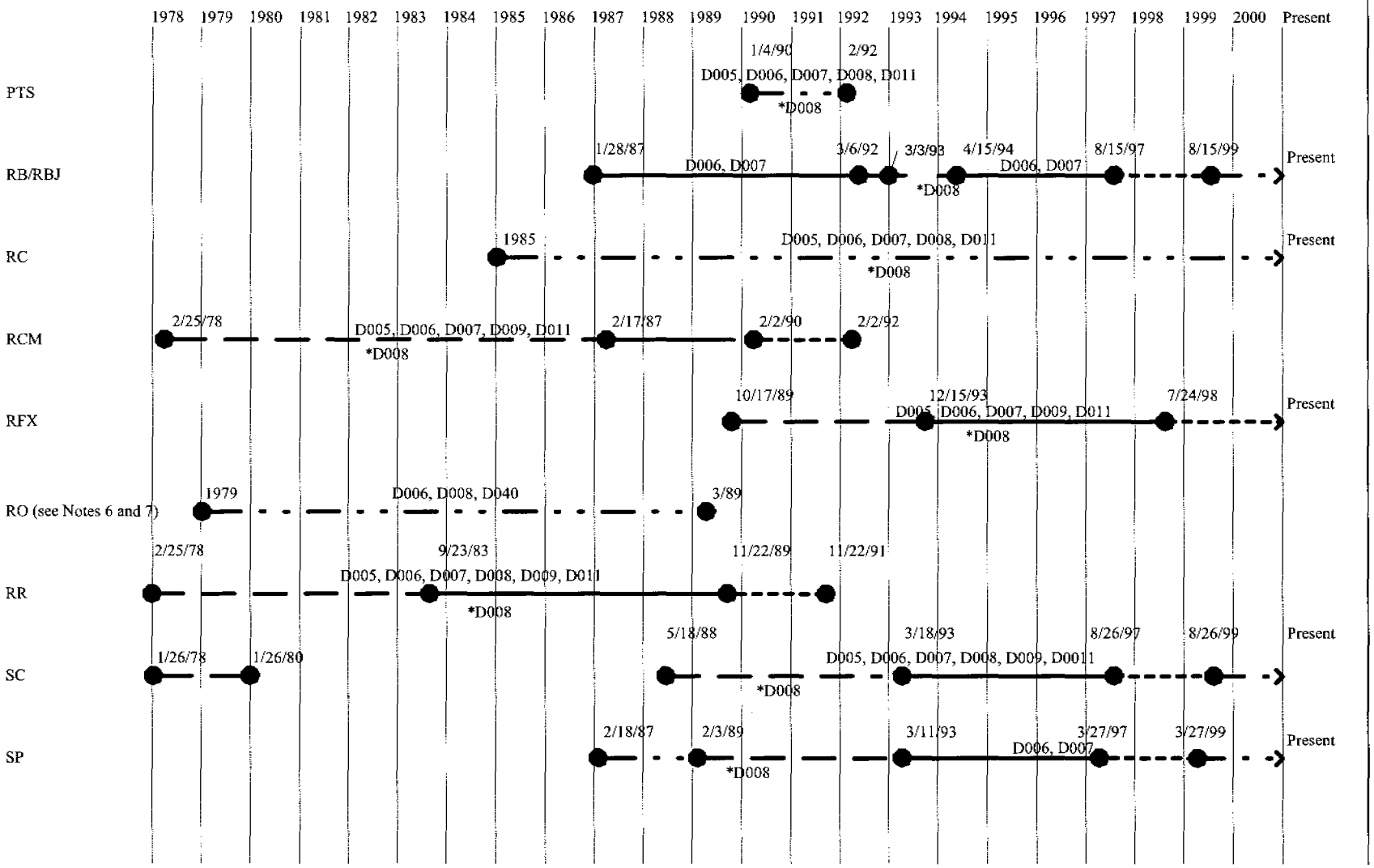

TIMELINE FOR NITRATE OPERATIONS (continued)

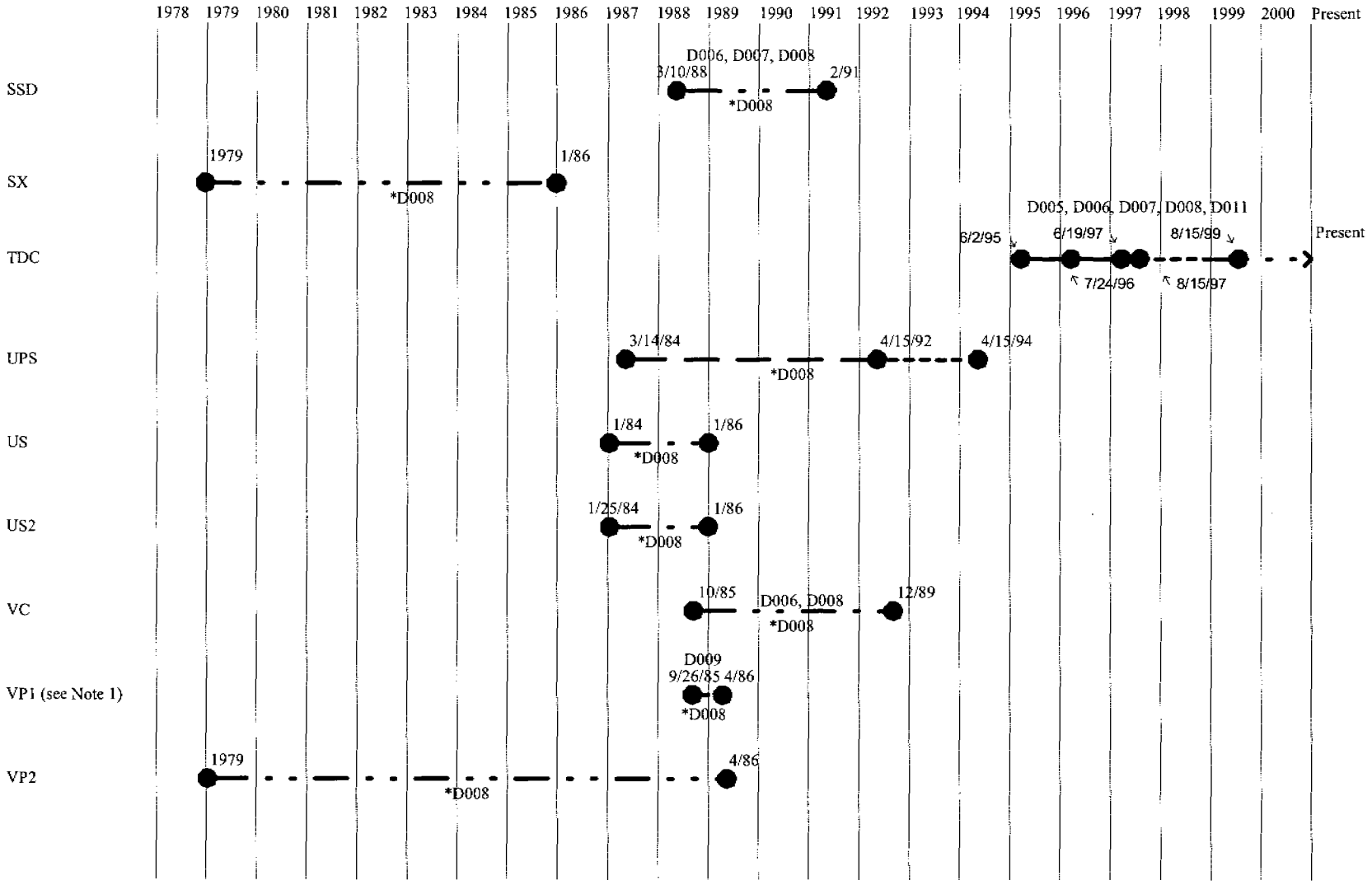

TIMELINE FOR NITRATE OPERATIONS (continued)

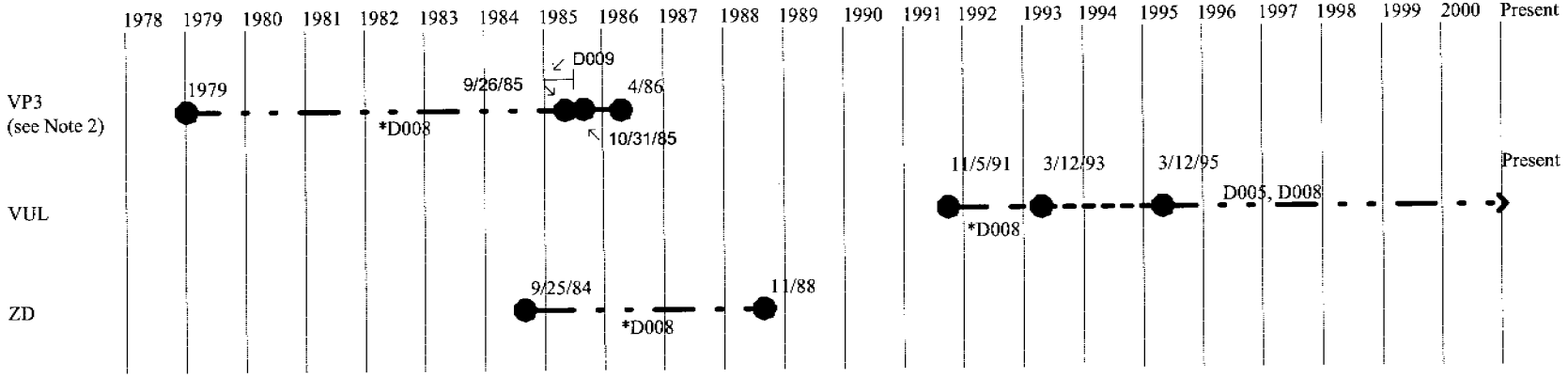

Notes on Time Dependence of RCRA Codes

* D008 - Applies to leaded gloves which were discarded in a separate waste stream after 1992, still under the originating P/S code.
[1] D009 - Mercuric nitrate used in P/S code VP1 from 9/85 to 10/85.
[2] D011 applies to hydroxide cakes in VP3 from 9/85 to 10/85.
[3] D011 -Silver nitrate used in chloride ion exchange from 1985 until end of 1993, hence D011 applies to CD, EV, HCD, HD, IA, DS, and LR.
[4] D011 applies to P/S code CF from 1985 through 1993.
[5] F002 - RCRA-listed solvent use discontinued in chloride operations in 1992, but waste containing these solvents may have been generated until the end of 1993. Affected P/S codes in nitrate are CF and HP.
[6] D006 and D008 applies to P/S code RO from 1979 to 3/89.
[7] D040 applies to P/S code RO during 1979.
[8] D006, D007, D008, D009 applies to P/S codes CD, HCD, and HD from 1985 to the present.
[9] D006 and D008 applies to P/S code ML from 10/18/90 to 1/27/94.
[10] D006 and D008 applies to P/S code VC from 10/85 to 12/89.
[11] D006, D007, and D008 applies to P/S code SSD from 3/88 to 2/91.
[12] D006, D007, D008, D009 applies to P/S codes DS, EV, and LR from 1985 to the present.
[13] D008 and D009 applies from 2/79 to 7/84.
[14] D006 and D008 applies from 1/78 to present.

TIMELINE EXPLANATION

The P/S code is established in either the P/S diagrams or in both (or all) revisions of the procedures designating the start and end dates (e.g., Rev. 0 to Rev. 1; or Rev. 0 to Rev. 5).

The P/S code is not identified in the procedure, but the process description matches the P/S code and the description in previous or later revisions of the same procedure.

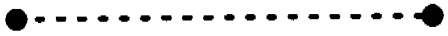

Extrapolate out two (2) years beyond the last procedure to next possible review date.

The P/S code is not identified in the procedure, but the process description matches that of the P/S diagram or P/S code description.

Time period based on subject matter expert comments

PROCESS INPUTS AND OUTPUTS

P/S Code	P/S Title	Process Inputs		Process Outputs		EPA Codes[2]	References
		Feed Stream(s)	Chemicals/Reagents	Product	Waste Stream[1]		
AL	Ash Leach	Incinerator ash	Nitric acid Calcium fluoride Aluminum nitrate	Plutonium solutions	Leached solids Leaded gloves	D005, D006, D007, D008, *D008, D009, D011	N-28/TWCP-3566
AO	Americium Processing Calcination	Americium oxalate and hydroxide cakes	None (physical process)	Pure americium oxide	Americium oxide cakes Leaded gloves	D006, D007, D008, *D008, D009, D011	N-81/TWCP-3568
AP	Americium Purification	Americium in nitric acid solutions	Hydroxylamine nitrate Nitric acid Anion exchange resin	Purified americium solutions Plutonium solutions	Leaded gloves	D007, D008, *D008, D009	N-81/TWCP-3569
AS	Anode Heel Dissolution	Plutonium oxide	Nitric acid Hydrofluoric acid Calcium fluoride	Plutonium solutions Filtered solids	Leaded gloves	D006, D007, D008, *D008, D011	N-81/TWCP-3568
AT	Ash Testing	Incinerator ash	Anion exchange resin Sodium nitrite (20% solution) Ferrous sulfamate (20% solution) Nitric acid Calcium fluoride Silver nitrate (only used in a cold lab; not present in TRU waste)	Plutonium solutions Filtered solids	Filtered solids (< DL) Leaded gloves	D005, D006, D007, D008, *D008, D011	N-36/TWCP-3567

P/S Code	P/S Title	Process Inputs		Process Outputs		EPA Codes[2]	References
		Feed Stream(s)	Chemicals/Reagents	Product	Waste Stream[1]		
ATL	Advanced Test Line for Actinide Separations RD&D	Oxides Ash Chloride salts Metals Sand, slag, crucibles	Aluminum nitrate solution Calcium nitrate solution Calcium fluoride Hydrochloric acid Hydrofluoric acid Nitric acid Anion exchange resin Ascorbic acid Ferrous ammonium sulfate Hydrogen peroxide Hydroxylamine nitrate Sodium nitrite Urea Diethyl oxalate Formamide Formic acid Oxalic acid Sodium hydroxide Sulfuric acid	Plutonium oxide cakes	Residues Nitrate salt solutions Bottoms solutions Leaded gloves	D005, D006, D007, D008, *D008, D009, D011	N-20/TWCP-3566
BAC	Bacterial Decomposition of Cellulose Items	Cellulose rags (cheesecloth)	Bacteria	Solutions of glucose and other byproducts	Leaded gloves	*D008	N-81/TWCP-3568
BF	Unknown name for this code	Anode heel metal (plutonium oxide)	None (physical process)	Plutonium oxide	Leaded gloves	D006, D007, D008, *D008, D011	N-81/TWCP-3568
BL	Blending	Plutonium oxide	None (physical process)	Plutonium oxide	Leaded gloves	*D008	N-81/TWCP-3568
BM	Burning Metal	Plutonium oxide Plutonium metal	None (physical process)	Plutonium oxide	Leaded gloves	*D008	N-14/TWCP-3548

P/S Code	P/S Title	Process Inputs		Process Outputs		EPA Codes[2]	References
		Feed Stream(s)	Chemicals/Reagents	Product	Waste Stream[1]		
BU	Button Burning	Plutonium metal buttons; anode heels	None (physical process)	Plutonium oxide	Leaded gloves	D006, D007, D008, *D008, D011	N-81/TWCP-3568
CC	Calcination	Plutonium oxalate cakes	None (physical process)	Plutonium oxide	Leaded gloves	*D008	N-81/TWCP-3568
CD	Hydroxide Cake Dissolution	Hydroxide cakes (from chloride operations)	Hydrofluoric acid Nitric acid Aluminum nitrate Calcium fluoride	Plutonium in nitric acid solutions	Residues (< DL) Leaded gloves	D005, D006, D007, D008, *D008, D009, D011	N-32/TWCP-3566
CF	Cement Fixation	Aqueous analytical solutions Organic analytical solutions Evaporator bottoms Evaporator salts Fine particulate materials Oils Organic petroleum-based liquids Spent ion exchange resins Americium oxide Calcium chloride salts Chloride solutions Filter aid Glovebox sweepings Graphite powder HEPA filter media High-fired ash Leached ash residues Leached particulate solids	Cement accelerator Nitric acid Organic liquid emulsifier Silicon defoamer Sodium citrate retarder Sodium hydroxide pH 4 phthalate buffer solution pH 7 phosphate buffer solution Gypsum cement	Cemented TRU waste	Leaded gloves	D007, D008, *D008, D009, D011, D019, D021, D022, D039, F002, F003	N-1/TWCP-3548 N-67/TWCP-3568 N-68/TWCP-3568 N-69/TWCP-3568 N-70/TWCP-3568 N-71/TWCP-3568 N-72/TWCP-3568 N-73/TWCP-3568 N-74/TWCP-3568

P/S Code	P/S Title	Process Inputs		Process Outputs		EPA Codes[2]	References
		Feed Stream(s)	Chemicals/Reagents	Product	Waste Stream[1]		
CF (continued)		Passivated uranium carbide Plutonium/thorium fluoride filter cakes Plutonium/thorium hydroxide filter cakes Plutonium/uranium filings Pump oils Silica solids Trioctyl phosphine oxide (TOPO) and iodine in kerosene Uranium oxide					
CH	Characterization	Plutonium oxide	Nitrogen gas Viscous water-soluble liquid	Plutonium oxide	Plutonium oxide slurries Leaded gloves	*D008	N-81/TWCP-3568
COD	Chlorinated Oxide Dissolution	Chloride pyrochemical salts	Sodium hydroxide solution Nitric acid Hydrofluoric acid	Plutonium oxide cakes Plutonium solutions Plutonium residues	Caustic liquids Leaded gloves	*D008	N-81/TWCP-3568
COL	Chlorinated Oxide Leach	Chlorinated oxides Chloride pyrochemical salts	Sodium hydroxide solution	Plutonium oxide cakes (may contain barium)	Caustic liquids Leaded gloves	D005, *D008	N-81/TWCP-3568

P/S Code	P/S Title	Process Inputs		Process Outputs		EPA Codes[2]	References
		Feed Stream(s)	Chemicals/Reagents	Product	Waste Stream[1]		
CPOD	Catalyzed Electrochemical Plutonium Oxide Dissolver	Plutonium oxide Filter residues Glovebox sweepings Plastic	Nitric acid Silver nitrate Hydrochloric acid Ferric ammonium sulfate hydrate Potassium thiocyanate Calcium fluoride Sodium chloride Water Argon	Plutonium solutions	Electrolytic solutions Silver chloride residues Leaded gloves	*D008, D011	N-21/TWCP-3566
CR	Crushing and Pulverizing	Sand, slag, crucible residues Skull oxide Graphite Magnesium oxide Ash	None (physical process)	Crushed materials	Leaded gloves	*D008	N-17/TWCP-3548
DF	DS Furnace and Oxide Preparation	Plutonium oxalate cake	None (physical process)	Plutonium oxide	Leaded gloves	*D008	N-81/TWCP-3568
DP	Dry Processing	Polycubes (polyethylene with plutonium oxide)	None (physical process)	Crushed polycubes	Leaded gloves	*D008	N-81/TWCP-3568

P/S Code	P/S Title	Process Inputs		Process Outputs		EPA Codes[2]	References
		Feed Stream(s)	Chemicals/Reagents	Product	Waste Stream[1]		
DS	Ion Exchange	Plutonium in nitric acid	Anion exchange resin Aluminum nitrate Nitric acid Sodium nitrite Hydroxylamine nitrate Hydrogen peroxide (30%) Oxalic acid Hydrofluoric acid Sodium hydroxide Ferrous sulfamate Ferrous ammonium sulfate Urea Phenolphthalein in ethanol Potassium fluoride hydrate	Plutonium in nitric acid solutions Plutonium oxide	Acidic effluents and filtrate solutions Ion exchange resins Leaded gloves	D005, D006, D007, D008, *D008, D009, D011	N-45/TWCP-3567 N-51/TWCP-3567 N-59/TWCP-3567
ED	Cascade Dissolver	Magnesium oxide crucibles Plutonium oxide Oxidized metal, skulls, etc. Incinerator ash	Nitric acid Calcium fluoride Aluminum nitrate	Plutonium in nitric acid solutions	Crucible and metal residues Leaded gloves	D005, D006, D007, D008, *D008, D009, D011	N-23/TWCP-3566
ETD	Experimental Thermal Decomposition	Combustible residues	Argon gas	Plutonium oxide Ash	Water scrub solutions	D005, D006, D007, D008, *D008, D011	N-81/TWCP-3568
EV	Evaporator	Ion exchange solutions Nitrate salts Oxalate filtrates Nitric acid distillates Vacuum pump seal waters Negative-chilled waters	Nitric acid Formic acid	Plutonium in nitric acid solutions	Nitrate salts Distillate solutions Filtrate solutions Leaded gloves	D006, D007, D008, *D008, D009, D011	N-61/TWCP-3568 N-62/TWCP-3568 N-64/TWCP-3568

P/S Code	P/S Title	Process Inputs		Process Outputs		EPA Codes[2]	References
		Feed Stream(s)	Chemicals/Reagents	Product	Waste Stream[1]		
FA	Americium Processing	Americium/nitric acid solution	Oxalic acid Sodium oxalate	Americium oxalate cakes Americium oxalate solutions	Leaded gloves	*D008	N-81/TWCP-3568
FC	Canning	Plutonium oxide	None (physical process)	Plutonium oxide	Leaded gloves	*D008	N-81/TWCP-3568
FX	Cement to Drum	Cemented waste, evaporator bottoms	None (physical process)	None	Packaged cemented waste Leaded gloves	D006, D007, D008, *D008, D009, D011	N-81/TWCP-3568
GMS	Open Gradient Magnetic Separation	Magnesium oxide Graphite Sand, slag, and crucible residues Plutonium processing residues	None (physical process)	Plutonium-rich materials	Plutonium-lean materials (< DL) Leaded gloves	*D008	N-2/TWCP-3548
HC	Calcination	Plutonium oxalate cakes	Water vapor	Plutonium oxide	Leaded gloves	*D008	N-81/TWCP-3568
HCD	Hydroxide Cake Dissolution	Hydroxide cakes (from chloride operations)	Hydrofluoric acid Nitric acid Aluminum nitrate Calcium fluoride	Plutonium in nitric acid solutions	Residues (< DL) Leaded gloves	D005, D006, D007, D008, *D008, D009, D011	N-32/TWCP-3566
HD	Hydroxide Cake Dissolution	Hydroxide cakes (from chloride operations)	Hydrofluoric acid Nitric acid Aluminum nitrate Calcium fluoride	Plutonium in nitric acid solutions	Residues (< DL) Leaded gloves	D005, D006, D007, D008, *D008, D009, D011	N-32/TWCP-3566
HGMS	High Gradient Magnetic Separation	Soil and clay	Water	Plutonium residues	Plutonium residues (< DL)	D006, D007, D008, D009, D011	N-81/TWCP-3568

P/S Code	P/S Title	Process Inputs		Process Outputs		EPA Codes[2]	References
		Feed Stream(s)	Chemicals/Reagents	Product	Waste Stream[1]		
HP	Cement Fixation	Evaporator bottoms Vacuum pump oils Tributylphosphate and iodine in kerosene Analytical chemistry solutions Salts Leached filter paper residues Ash Miscellaneous solutions Americium oxide	Sodium hydroxide Portland cement Gypsum cement Surfactant (polyoxy-ethylene-20-sorbitan)		Cemented waste Leaded gloves	D007, D008, *D008, D009, D011, D019, D021, D022, D039, F002, F003	N-81/TWCP-3568
HRA	Hanford Reservation materials	Process residues from Hanford Reservation	Not specified	Recovered plutonium	Not specified	D004, D005, D006, D007, D008, *D008, D009, D010, D011	TWCP-5371
IA	Impure Americium Holding for Discard	Americium hydroxide cakes	None (no processing performed)	Americium hydroxide cake	Leaded gloves	D006, D007, D008, *D008, D009, D011	N-81/TWCP-3568
IS	Incinerator	Combustible materials (e.g., rags, paper wipes, wood) (less than 10% plastic and rubber)	Sodium hydroxide solution Potassium hydroxide solution	Scrubber solutions	Ash Scrubber solutions (< DL) Pump seal solutions Leaded gloves	D005, D006, D007, D008, *D008, D011	N-5/TWCP-3548
LC	Uranium/ Plutonium Processing	Plutonium oxide	Nitric acid Hydrofluoric acid Oxalic acid Sodium oxalate	Plutonium oxalate	Acidic solutions Uranium nitrate solutions Leaded gloves	*D008	N-81/TWCP-3568

P/S Code	P/S Title	Process Inputs		Process Outputs		EPA Codes[2]	References
		Feed Stream(s)	Chemicals/Reagents	Product	Waste Stream[1]		
LG1	Non Combustible Leach	Debris (metal, glass, plastic)	Nitric acid	Plutonium in nitric acid solutions	Leaded gloves	D006, D008, *D008	N-81/TWCP-3568
LG2	Hydroxide Cake Dissolution	Hydroxide cakes	Nitric acid	Plutonium in nitric acid solutions	Leaded gloves	D006, D007, D008, *D008, D009, D011	N-81/TWCP-3568
LR	Ion Exchange	Plutonium in nitric acid solutions	Ferrous ammonium sulfate Nitric acid Hydroxylamine nitrate Oxalic acid Aluminum nitrate Hydrofluoric acid Urea Anion exchange resin Sodium nitrite Hydrogen peroxide Ferrous sulfamate Phenolphthalein in ethanol Potassium fluoride hydrate	Plutonium in nitric acid solutions Plutonium oxide	Acidic effluents Acidic filtrate solutions Anion exchange resins Leaded gloves	D005, D006, D007, D008, *D008, D009, D011	N-42/TWCP-3567 N-45/TWCP-3567 N-51/TWCP-3567
MAG	Magnetic Separation	Magnesium oxide Graphite Sand, slag, and crucible residues Plutonium processing residues	None (physical process)	Plutonium-rich materials	Plutonium-lean materials (< DL) Leaded gloves	*D008	N-2/TWCP-3548
MAS	RD&D Experimental Process	Magnesium oxide Graphite Sand, slag, and crucible residues Plutonium processing residues	None (physical process)	Plutonium-rich materials	Plutonium-lean materials (< DL) Leaded gloves	*D008	N-2/TWCP-3548

P/S Code	P/S Title	Process Inputs		Process Outputs		EPA Codes[2]	References
		Feed Stream(s)	Chemicals/Reagents	Product	Waste Stream[1]		
MB	Nitric Dissolution of Molten Salts	Molten salt extraction salts	Hydrochloric acid Nitric acid	Plutonium solutions	Acidic solution Leaded gloves	*D008	N-81/TWCP-3568
MELL	Mediated Electro-Oxidation of Low Level Waste (LLW)	Cellulose-based materials	Nitric acid Cobalt nitrate Cerium nitrate Platinum anode Titanium anode Stainless steel cathode	Plutonium solutions Plutonium oxide	Plutonium oxide (< DL) Leaded gloves	D006, D007, D008, *D008, D009, D011	N-33/TWCP-3566
MF	Metals Furnace	Plutonium metal items	None (physical process)	Plutonium oxide	Leaded gloves	*D008	N-81/TWCP-3568
ML	Non-Plutonium Metal Leach	Metal equipment w/ Pu surface contamination	Nitric acid Calcium fluoride Hydrofluoric acid	Plutonium solutions	Metal equipment Leaded gloves	D006, D008 *D008	N-29/TWCP-3566
MPD	Cascade Dissolver	Plutonium oxide (salts or residues) Incinerator ash	Nitric acid Calcium fluoride Potassium hydroxide Sodium hydroxide Aluminum nitrate	Plutonium solutions	Plutonium residues (< DL) Leaded gloves	D005, D006, D007, D008, *D008, D009, D011	N-25/TWCP-3566
NC	Non-Combustible Leach	Noncombustible material w/ surface Pu contamination	Calcium fluoride Nitric acid Hydrofluoric acid Aluminum nitrate Argon	Plutonium solutions	Leached noncombustible solids Leaded gloves	D006, D008 *D008	N-31/TWCP-3566
NL	Non-Combustible Leach	Debris (metal, glass, plastic)	Nitric acid	Plutonium in nitric acid solutions	Residues (< DL) Leaded gloves	D006, D008 *D008	N-81/TWCP-3568
NR	Nitrate Recovery	None (not activated)	None	None	None	None	N-81/TWCP-3568

P/S Code	P/S Title	Process Inputs		Process Outputs		EPA Codes[2]	References
		Feed Stream(s)	Chemicals/Reagents	Product	Waste Stream[1]		
OD	Oxide Dissolution	Coarse oxides	Nitric acid Hydrofluoric acid Aluminum nitrate Calcium fluoride Argon	Plutonium in acidic solutions	Plutonium residues (< DL) Leaded gloves	D006, D007, D008, *D008	N-37A/TWCP-3567 N-81/TWCP-3568
OH	Hydroxide Precipitation	Americium hydroxide solutions from the FFTF and Breeder Oxide Production processes	Nitric acid Sodium Hydroxide	Americium solutions Plutonium solutions	Americium solutions (<DL) Leaded gloves	D006, D007, D008, *D008, D009, D011	N-55/TWCP-3567
OY	Oxalate Precipitation	Plutonium nitrate solution (eluate from anion exchange)	Oxalic acid Urea Hydroxylamine nitrate Nitric acid Aluminum nitrate solution	Plutonium oxalate cakes Plutonium oxide Plutonium solutions	Plutonium solutions (< DL) Leaded gloves	*D008	N-50/TWCP-3567
PA	Passivation	Glovebox sweepings, oxides containing unoxidized plutonium metal, carbides, and nitrides	None (physical process)	Plutonium oxide Passivated materials	Leaded gloves	*D008	N-81/TWCP-3568
PAF	Passivation Furnaces	Pyrophoric plutonium metal and alloys	Argon gas	Plutonium oxide	Leaded gloves	*D008	N-7/TWCP-3548
PR	Peroxide Precipitation	Oxide dissolution filtrate	Hydrogen peroxide Nitric acid Sulfuric acid Sodium hydroxide	Plutonium in nitric acid solutions	Leaded gloves	*D008	N-52/TWCP-3567
PS	Peroxide Precipitation of MSE Salts	Plutonium-containing nitric acid solutions	Hydrogen peroxide Nitric acid Sodium hydroxide solution	Plutonium in nitric acid solutions Americium oxalate cakes	Leaded gloves	*D008	N-81/TWCP-3568

P/S Code	P/S Title	Process Inputs		Process Outputs		EPA Codes[2]	References
		Feed Stream(s)	Chemicals/Reagents	Product	Waste Stream[1]		
PT	Plutonium/ Thorium Separation	Plutonium/thorium oxide residues	Nitric acid Nitrate-based ion exchange resin Sodium hydroxide Chloride-based ion exchange resin	Plutonium in nitric acid solutions	Caustic liquids Thorium-containing residues Leaded gloves	D007, *D008	N-81/TWCP-3568
PTS	RD&D Pretreatment Study	Variety of residue matrices, including ash	None (physical process)	None	Leaded gloves	D005, D006, D007, D008, *D008, D011	N-81/TWCP-3568
RB	Roasting and Blending	Plutonium oxide	None (physical process)	Plutonium oxide	Leaded gloves	D006, D007, *D008	N-57 N-57A N-57B (all in TWCP-3567)
RBJ	Roasting and Blending Jr	Plutonium oxide	None (physical process)	Plutonium oxide	Leaded gloves	D006, D007, *D008	N-57 N-57A N-57B (all in TWCP-3567)
RC	Rotary Calciner	Ash Graphite crucibles Uranium oxide	None (physical process)	Calcined ash	Leaded gloves	D005, D006, D007, D008, *D008, D011	N-81/TWCP-356
RCM	Rich Column Material Ion Exchange	Plutonium in nitric acid solutions	Anion exchange resin Aluminum nitrate Nitric acid Sodium nitrite Hydroxylamine nitrate Hydrogen peroxide Oxalic acid Hydrofluoric acid	Plutonium in nitric acid solutions Plutonium oxide	Acidic effluent solutions Filtrate solutions Leaded gloves	D005, D006, D007, *D008 D008, D009, D011	N-41/TWCP-3567 N-51/TWCP-3567

P/S Code	P/S Title	Process Inputs		Process Outputs		EPA Codes[2]	References
		Feed Stream(s)	Chemicals/Reagents	Product	Waste Stream[1]		
RFX	Ion Exchange	Plutonium in nitric acid solutions	Anion exchange resin Aluminum nitrate Nitric acid Hydroxylamine nitrate Hydrogen peroxide Oxalic acid Hydrofluoric acid Sodium Nitrite Sodium Hydroxide Phenolphthalein in ethanol Potassium fluoride hydrate	Plutonium in nitric acid solutions Plutonium oxide	Acidic effluents and filtrate solutions Ion exchange resins Leaded gloves	D005, D006, D007, *D008 D008, D009, D011	N-45/TWCP-3567 N-47/TWCP-3567
RO	Oil Recovery	Vacuum pump oils Contaminated organics	Trichloroethylene (used once in 1979)	Plutonium residues	Oils and organics on vermiculite Leaded gloves	D006, *D008, D040	N-81/TWCP-3568
RR	Ion Exchange	Plutonium in nitric acid solutions	Anion exchange resin Aluminum nitrate Nitric acid Sodium nitrite Hydroxylamine nitrate Hydrogen peroxide Oxalic acid Hydrofluoric acid	Plutonium in nitric acid solutions Plutonium oxide	Acidic effluents and filtrate solutions Ion exchange resins Leaded gloves	D005, D006, D007, D008, *D008, D009, D011	N-43/TWCP-3567 N-51/TWCP-3567 N-59/TWCP-3567
SC	Cascade Dissolver, G437	Sand, slag, and crucible residues Ash Magnesium oxide crucibles	Potassium hydroxide Sodium hydroxide Nitric acid Aluminum nitrate Calcium fluoride Hydrofluoric acid	Plutonium in nitric acid solutions Plutonium oxide residues	Alkaline scrubber solutions Residues (< DL) Leaded gloves	D005, D006, D007, D008, *D008, D009, D011	N-24/TWCP-3566

P/S Code	P/S Title	Process Inputs		Process Outputs		EPA Codes[2]	References
		Feed Stream(s)	Chemicals/Reagents	Product	Waste Stream[1]		
SP	Scrap Dissolution, G438	Filter residues Glovebox sweepings Coarse oxides	Nitric acid Hydrofluoric acid Aluminum nitrate Calcium fluoride Argon	Plutonium oxide residues Plutonium filtrate solutions	Acidic scrubber solutions Residues (<DL) Leaded gloves	D006, D007, D008, *D008	N-37/TWCP-3567 N-37A/TWCP-3567
SSD	Special Scrap Dissolution	Miscellaneous oxide scrap items	Nitric acid Hydrofluoric acid	Plutonium in nitric acid solutions	Residues Leaded gloves	D006, D007, D008, *D008	N-81/TWCP-3568
SX	Americium Processing Silicon Removal	Americium-containing hydroxide cakes	Nitric acid	Americium solutions	Silica gels Leaded gloves	*D008	N-81/TWCP-3568
TDC	Thermal Decomposition of Cellulose Items R&D	Cellulose items	Potassium hydroxide Argon Filter Aid	Plutonium solutions Plutonium residue Ash	Caustic scrubber solutions Plutonium solutions (<DL) Leaded gloves	D005, D006, D007, D008, *D008, D011	N-6/TWCP-3548 N-12/TWCP-3548
UPS	Uranium/ Plutonium Separation	Uranium-plutonium oxide mixtures	Aluminum nitrate Nitric acid	Plutonium oxide	Uranium wash and filtrate solutions Leaded gloves	*D008	N-19/TWCP-3566
US	Uranium Separation for Solid Solution Feed	Calcined solid solutions containing uranium or plutonium oxide	Nitric acid Oxalic acid Sodium oxalate	Plutonium oxide	Acidic uranium solutions Leaded gloves	*D008	N-81/TWCP-3568
US2	Uranium Separation for Non-Solid Solution Feed	Plutonium/uranium oxide	Nitric acid	Plutonium oxide	Acidic uranium solutions Leaded gloves	*D008	N-81/TWCP-3568
VC	Variable CSMO Scrap Dissolution	Miscellaneous oxide scrap items	Nitric acid Hydrofluoric acid	Plutonium nitrate solutions	Residues (< DL) Leaded gloves	D006, D008, *D008	N-81/TWCP-3568

P/S Code	P/S Title	Process Inputs		Process Outputs		EPA Codes[2]	References
		Feed Stream(s)	Chemicals/Reagents	Product	Waste Stream[1]		
VP1	CSMO Scrap Dissolution	Plutonium/aluminum alloy	Nitric acid Mercuric nitrate (catalyst) Sodium hydroxide Oxalic acid Sodium oxalate	Plutonium oxide cakes Plutonium oxalate solutions	Aluminum metal pieces Aluminum nitrate sludge Leaded gloves	*D008, D009	N-81/TWCP-3568
VP2	Polycube Processing	Skins and fragments of polycubes	None (physical process)	Plutonium oxide	Polystyrene breakdown products (oils) Vacuum pump oil Leaded gloves	*D008	N-81/TWCP-3568
VP3	Hydroxide Precipitation	Oxalate solutions	Sodium hydroxide	Plutonium hydroxide cakes	Caustic waste Hydroxide cakes (< DL) Leaded gloves	*D008, D009, D011	N-81/TWCP-3568
VUL	Vessel Unloading	Vessels	WD-40 Vacuum grease Silicon adhesive Pneumatic tool oil	Vessels Residues	Metal and wire debris Leaded gloves	D005, D008, *D008	N-9/TWCP-3548
ZD	Scrap Oxide Dissolution	Scrap and impure plutonium oxide	Nitric acid Hydrofluoric acid	Plutonium oxide Plutonium solutions	Leaded gloves	*D008	N-81/TWCP-3568

[1]All P/S codes generate routine laboratory debris waste. For those P/S codes that generate only debris waste, this column is left blank. The debris waste may consist of glassware, plastics, ceramic materials, paper, rags, HEPA filters, metal containers, brushes, and small tools.

[2]The EPA hazardous waste codes listed apply to the solid TRU waste only and not to any other waste forms that may undergo further treatment or processing (e.g., evaporation or cement fixation) before becoming the final waste form to be shipped to the WIPP. The resulting treated waste stream in its final waste form is evaluated for hazardous waste constituents and assigned the applicable EPA hazardous waste codes at that time. All P/S codes have the potential to generate leaded gloves. See discussion in sections 3.6.1 and 4.2 for the disposition of these gloves.

*D008 due to leaded gloves

GENERALIZED PROCESS STATUS DIAGRAM FOR NITRATE PROCESSES

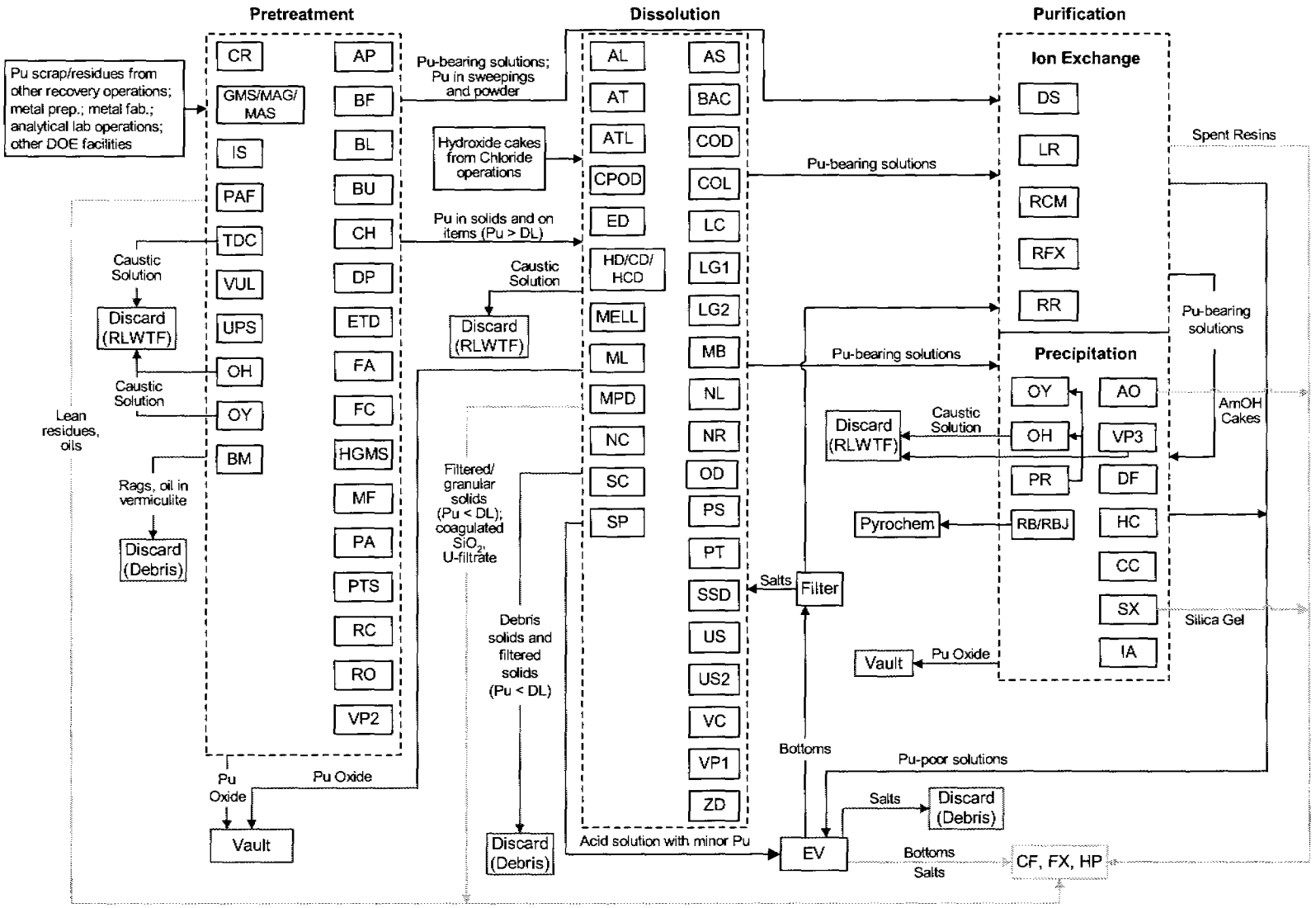

Decision/Discrepancies Resolution Documentation
TA-55 Nitrate Operations

Item Identification*	AK No. 1	Source No. 1	AK No. 2	Source No. 2	Decision/Discrepancy	Rationale**
HRA	Waste codes D004 and D010 are also applicable to this P/S code	TWCP-5371	Process report does not address D004 or D010	Summary report	Discrepancy between report and interview	C—SME indicated add D004 and D010 to timeline pre 1984. After 1984, no D004 or D010 per SME. See attached meeting notes attached.
CP	Process report lists D006 as a HWN	Process report	Per Jim Foxx, does not indicate D006	TWCP-3567	Process report indicates D006 due to other information	B—SME provided analytical information. Submit data as a record. See attached meeting notes.
RO	Page change indicates that no RCRA organic were formed in the process and no RCRA metals were introduced into the process.	TWCP-4100	AK process report lists D006, D008, and D040 These sources indicate toluene and styrene are possible contaminants	TWCP-3568/N-83, TWCP-3548/N-10, N-18.	Process report lists the HWN to be conservative	A—SME said to add these codes to be conservative. Possible contamination from pump oils used in process. See attached meeting notes.
AL	Per Jim Foxx, Ag (D011) not above regulatory limits	TWCP4167	Process reports list D011	Process Report	Reported D011	B—cannot locate analytical data. Applying D011 to be conservative. See attached meeting notes.

Item Identification*	AK No. 1	Source No. 1	AK No. 2	Source No. 2	Decision/Discrepancy	Rationale**
IS and CF	Indicates possibility of Cm-244 in ash produced by the IS operation. After 1988, interview suggests Cm-244 could be present in CF from evaporator bottoms	TWCP-5165	Process report does not indicate Cm-244	Process report	Process report does not indicate Cm-244.	B—SME wants Cm-244 added to report as it is important to NDA measurements. Submit email to records. See attached email.
All	TA-55 waste was defense related based on other interviews and budget	TWCP-614	Commingling of defense and non-defense, segregation after 1997 and 1998. Estimated to be 80/20 defense/non-defense for Pu.-239 and 50/50 for Pu-238 processing	TWCP—887, TWCP-4162	Summary report states commingling and segregation timeline.	C—Memo dated 8/27/98 says segregation begun. See attached meeting notes. TWCP-4167

Sandy Wander — AK Investigator — Sandy Wander — 2/25/02
Evaluator (Print Name) — Title — Signature — Date

P Rogers — Pamela Rogers — 2/26/02
SPM Review (Print Name) — Signature — Date

* Item identification can be PS Code, waste stream, drum ID, item ID, or other identification of items affected.
** Rationale code: [A=Professional Judgment; B=Most Conservative Decision; C=Other (Specify)]

Source: TWCP-07910

TWCP/WRR
Document Modification/Review Cycle

Step 7: Preparation for Document Control

☐ Revision
☒ Interim Change

Document ID: TWCP-AK-2.1-005 New Rev/IC: R.2/IC1

Preparer: Sandy Wander

Document Title:
Process Acceptable Knowledge Report for Nitrate Operations at TA-55

Blank entries are Not Applicable items.

- ☒ Procedure number verified
- ☒ Procedu
- ☒ Procedu
- ☒ Paginat
- ☒ Docum
- ☒ Attachn
- ☐ Hazard
- ☒ Effective/Review Date/LAUR# on cover page
- ☐ Copy of final to Training/Signature Copies
- ☒ Signatures and Dates typed on cover page
- ☒ Revision History table reflect changes and ective date
- rms have been marked as SAMPLE, if applicable
- rms extracted for Web publishing
- ctronic files archived
- kette Prepared for Document Control
- ☒ Document Control packet contains signed original, diskette, DRR/Redline, review documentation

AK-005.2.2.1 Effective date 3/21/02 – Posted to web on 3/27/02
Pending response from CBFO
Per Jim Bailey
RMDC
3/27/02

Document Tracking Closed ○ Open ◉ Closed Date to DC: 3/27/2002 Signed Initials: JJS

Step 8: Document Control - Tracking and Web Conversion

Date Received: 3/27/02

- ☑ Verify Signatures
- ☑ Verify Effective Date cover/history
- ☑ Verify IC added to document (if applicable)
- ☑ Log into Database/Make Assignment
- ☑ Print Receipts/Cover sheets
- ☑ Copy document: 2
- ☑ Control Stations Updated - Date: 3/27/02
- ☑ Master Index Updated - Date: 3/27/02
- ☑ NA Archive old revision (Record)

- ☑ Capture Document: __ Word ✓ PDF
- ☑ Forms: __ Yes ✓ No
- ☑ Transfer to Web Server
- ☑ Quality check to Original
- ☑ Verify Signatures ✓ Signature Dates ✓
- ☑ Dates: ✓ Cover ✓ Rev. History ✓ Review Date
- ☑ Web Page TOC: ✓ No/Rev ✓ Effective Date ✓ LAUR ✓ Title ✓ Link ✓ Test
- ☑ On-line test: ✓ Open Doc
- ☑ Electronic Notification: ✓ Sent ✓ Printed
- ☑ NA CBFO: __ Electronic Copy __ Printed
- ☐ Change Control Notification ___ Sent ___ Printed ✓ NA

Date Completed: 3/27/02 Signed Initials: [illegible]

TWCP/WRR
Document Modification/Review Cycle

Step 1: Receipt of Document

Status: ○ Open ◉ Closed ☐ Revision ☒ Interim Change

Date Received: 3/21/2002

Current Rev/IC: R.2

Document ID: TWCP-AK-2.1-005

Rev/IC: R.2/IC1

Document Title:
Process Acceptable Knowledge Report for Nitrate Operations at TA-55

Preparer: Sandy Wander

Date to DP Team: 3/21/2002

Step 2: Modification Cycle

Technical Reviewer:
(QA and Preparer)

Release for Review:

Comments:
03/27/02: Prepared document for transmittal to Document Control

Step 3: Preliminary Review Cycle

☒ IC - Not Applicable (enter action in comments section)

Reviewer	Name	Sent Out	Returned	Comments

Comments:

TWCP/WRR
Document Modification/Review Cycle

Step 4: Comment Reconciliation Cycle

☒ IC - Not Applicable (enter action in comments section)

Reviewer Comments Incorporated:

Redline/DRR Given to Preparer:

Reconciled Comments Returned:

Modifications Made to Document:

Preparer Review of Modifications:

Signed/Release for Final Signature:

Comments:

Step 5: Final Signature Cycle

☒ IC - Not Applicable (enter action in comments section)

Signature	Position	Sent Out	Returned	Comments

Comments:

Step 6: External Review Cycle

Organization	Contact	Sent Out	Returned	Comments
Change Control	G.M.Polley	3/21/2002	3/25/2002	NA

Comments

LOS ALAMOS
NATIONAL LABORATORY - TWCP RMDC

Controlled Document Acknowledgment

Failure to return receipt by response date may result in removal from Distribution and/or placement on Supervised Work Activities for reciepients who are overseeing or performing work to this document.

Please Sign, Fold, and Return this Form

To: TWCP RMDC **Mail Stop: M 319** **Please Respond 4/11/2002**

TWCP-AK-2.1-005,R.2/IC1

Effective Date 3-21-2002 **Doc_Source** TWCP **Doc_Status** FINAL **Entry No**

Document Title PROCESS ACCEPTABLE KNOWLEDGE REPORT FOR NITRATE OPERATIONS AT TA-55 (LA-UR-O2-1715)

Document Comments

Work Stations	ID_No	Name	MS	Organization	Copy
☒ RMDC	N/A	?	?	?	
☐ WCRRF					
☐ RAMROD					
☐ RANT					
☐ DECON					
☒ QA					

Action Required:
Please sign receipt and return to **RMDC, M 319**. My Signature on this Form verifies that I have Received this Document.

___ Please remove me from the Controlled Distribution List. Since the contents of this document does not apply to our operation the document is being returned. (Not applicable for Controlled Stations)

To be signed by the Controlled Document Recipient or their designee.

Signature: _____ Date: 3/27/02

To: rubyannf@lanl.gov, mlgarcia@lanl.gov
From: Patricia G Patton <pgp@lanl.gov>
Subject: Procedure Notification
Cc: fabi,bailey, lpc
Bcc:
Attached:

The following are revised AK reports.

Effective Date: 3/21/02

TWCP-AK-2.1-004,R.2/IC1 - Process Acceptable Knowledge Report for Miscellaneous Operations at TA-55 (LA-UR-02-1714)

TWCP-AK-2.1-005,R.2/IC1 - Process Acceptable Knowledge Report for Nitrate Operations at TA-55 (LA-UR-02-1715)

TWCP-AK-2.1-006,R.2/IC1 - Process Acceptable Knowledge Report for Pyrochemical Processes at TA-55 (LA-UR-02-1713)

TWCP-AK-2.1-007,R.2/IC1 - Process Acceptable Knowledge Report for Special Processing at TA-55 (LA-UR-02-1712)

TWCP-AK-2.1-009,R.0/IC1 - Process Acceptable Knowledge Report for Plutonium-238 Operations at TA-55 (LA-UR-02-1709)

~~~~**~~**~~**~~**~~**~~**~~**~~**~~**

Patricia G. Patton
Los Alamos National Laboratory
E-ET / TWCP
Records Management / Document Control
(RMDC)
557 Oppenheimer
TA-00 / bldg 764
MS M319
Phone: (505) 667-2071
Email: pgp@lanl.gov
~~~~**~~**~~**~~**~~**~~**~~**~~**~~**

TWCP/WRR
Document Modification/Review Cycle

Step 7: Preparation for Document Control

☒ Revision
☐ Interim Change

Document ID: TWCP-AK-2.1-005 New Rev/IC: R.2

Preparer: John Musgrave

Document Title:
Process Acceptable Knowledge Summary Report for Nitrate Operations at TA-55

Blank entries are Not Applicable items.

- ☒ Procedure number verified
- ☒ Procedure Title verified
- ☒ Procedure Revision/IC verified
- ☒ Pagination verified
- ☒ Document Header verified
- ☒ Attachment Header verified
- ☐ Hazard Summary verified (if applicable)
- ☒ Effective/Review Date/LAUR# on cover page
- ☐ Copy of final to Training/Signature Copies
- ☒ Signatures and Dates typed on cover page
- ☒ Revision History table reflect changes and effective date
- ☐ Forms have been marked as SAMPLE
- ☐ Forms extracted for Web publishing
- ☒ Electronic files archived
- ☒ Diskette Prepared for Document Control
- ☒ Document Control packet contains signed original, diskette, DRR/Redline, review documentation

Document Tracking Closed ○ Open ◉ Closed Date to DC: 5/17/2001 Signed Initials: JJS

Step 8: Document Control - Tracking and Web Conversion

Date Received: 5/17/01

- ☑ Verify Signatures
- ☑ Verify Effective Date cover/history
- NA Verify IC added to document (if applicable)
- ☑ Log into Database/Make Assignment
- ☑ Print Receipts/Cover sheets
- ☑ Copy document: 1
- ☑ Control Stations Updated - Date: 5/17/01
- ☑ Master Index Updated - Date: 5/17/01
- ☑ Archive old revision (Record)

- ☑ Capture Document: ✓ Word ✓ PDF
- ☑ Forms: __ Yes ✓ No
- ☑ Transfer to Web Server
- ☑ Quality check to Original
- ☑ Verify Signatures ✓ Signature Dates ✓
- ☑ Dates: ✓ Cover ✓ Rev. History ✓ Review Date
- NA Add: Controlled Document Original Signatures on File at the RMDC
- NA Security Set for: ____ Read Only
- ☑ Web Page TOC: ✓ No/Rev ✓ Effective Date NA LAUR ✓ Title ✓ Link ✓ Test
- ☑ On-line test: ✓ Open Doc NA Password
- ☑ Electronic Notification: ✓ Sent ✓ Printed
- ☑ CAO: ✓ Electronic Copy ✓ Printed

Date Completed: 5/17/01 Signed Initials: G

TWCP/WRR
Document Modification/Review Cycle

Step 4: Comment Reconciliation Cycle ☐ IC - Not Applicable (enter action in comments section)

Reviewer Comments Incorporated: .....

Redline/DRR Given to Preparer: .....

Reconciled Comments Returned: .....

Modifications Made to Document: .....

Preparer Review of Modifications:

Signed/Release for Final Signature: .....

Comments:

Step 5: Final Signature Cycle ☐ IC - Not Applicable (enter action in comments section)

Signature	Position	Sent Out	Returned	Comments
J. Fabryka-Martin	Technical	5/7/2001	5/7/2001	Independent Technical Reviewer/Editor
M. Lin	SPM	5/12/2001	5/12/2001	Site Project Manager
S. Wander	QA	5/14/2001	5/14/2001	Waste Certification Official
M. Gavett	QA	5/14/2001	5/14/2001	Site Project QA Officer
C. Foxx	Fac Mgr	5/7/2001	5/7/2001	Facility Representative

Comments:

Step 6: External Review Cycle

Organization	Contact	Sent Out	Returned	Comments
Classification			5/16/2001	LA-UR-01-2555)

Comments

TWCP/WRR
Document Modification/Review Cycle

Step 1: Receipt of Document

Status: ○ Open ◉ Closed ☒ Revision ☐ Interim Change

Date Received: 4/1/2001

Current Rev/IC: R.1

Document ID: TWCP-AK-2.1-005

Rev/IC: R.2

Document Title:
Process Acceptable Knowledge Summary Report for Nitrate Operations at TA-55

Preparer: John Musgrave

Date to DP Team: 4/1/2001

Step 2: Modification Cycle

Technical Reviewer:
(QA and Preparer)

Release for Review:

Comments:
04/01/01 through 05/16/01: Incorporate changes from author, reviewers, and auditors

Step 3: Preliminary Review Cycle

☐ IC - Not Applicable (enter action in comments section)

Reviewer	Name	Sent Out	Returned	Comments

Comments:

To: rubyannf@lanl.gov, mlgarcia@lanl.gov, prmtz@lanl.gov
From: Louise Garcia <louise@lanl.gov>
Subject: For Training Distribution
Cc: fl@lanl.gov, manmtz@lanl.gov
Bcc:
Attached:

The following are revised AK Reports.

TWCP-AK-2.1-002,R.2 - Process Acceptable Knowledge Summary Report for Chloride Operations at TA-55

TWCP-AK-2.1-003,R.2 - Process Acceptable Knowledge Summary Report for Metal Operation Processes at TA-55

TWCP-AK-2.1-004,R.2 - Process Acceptable Knowledge Summary Report for Miscellaneous Operations at TA-55

TWCP-AK-2.1-005,R.2 - Process Acceptable Knowledge Summary Report for Nitrate Operations at TA-55

To: wipp.notify@wipp.carlsbad.nm.us
From: Louise Garcia <louise@lanl.gov>
Subject: [Procedure]
Cc: Tammy.Bowden@wipp.carlsbad.nm.us
Bcc: fl@lanl.gov
Attached: K:\twcp\RMDC\AK\TWCP-AK-2.1-002\TWCP-AK-2^1-002R2.pdf; K:\twcp\RMDC\AK\TWCP-AK-2.1-003\TWCP-AK-2^1-003R2.pdf; K:\twcp\RMDC\AK\TWCP-AK-2.1-004\TWCP-AK-2^1-004R2.pdf; K:\twcp\RMDC\AK\TWCP-AK-2.1-005\TWCP-AK-2^1-005R2.pdf;

The following are revised AK Reports.

TWCP-AK-2.1-002,R.2 - Process Acceptable Knowledge Summary Report for Chloride Operations at TA-55

TWCP-AK-2.1-003,R.2 - Process Acceptable Knowledge Summary Report for Metal Operation Processes at TA-55

TWCP-AK-2.1-004,R.2 - Process Acceptable Knowledge Summary Report for Miscellaneous Operations at TA-55

TWCP-AK-2.1-005,R.2 - Process Acceptable Knowledge Summary Report for Nitrate Operations at TA-55

LOS ALAMOS
NATIONAL LABORATORY - TWCP RMDC

Controlled Document Acknowledgment

Failure to return receipt by response date may result in removal from Distribution and/or placement on Supervised Work Activities for reciepients who are overseeing or performing work to this document.

Please Sign, Fold, and Return this Form

To: **CST-7 RMDC** Mail Stop: **E517** Please Respond By: **5/31/2001**

TWCP-AK-2.1-005,R.2

Effective Date 5-17-2001 **Doc_Source** TWCP **Doc_Status** FINAL **Entry No**

Document Title PROCESS ACCEPTABLE KNOWLEDGE SUMMARY REPORT FOR NITRATE OPERATIONS AT TA-55

Document Comments

Work Stations	ID_No	Name	MS	Organization	Copy
☒ RMDC ✓	N/A	?	?	?	
☐ WCRRF					
☐ RAMROD					
☐ RANT					
☐ DECON					
☐ QA					

Action Required:

Please sign receipt and return to **RMDC, E517**. My Signature on this Form verifies that I have Received this Document.

___ Please remove me from the Controlled Distribution List. Since the contents of this document does not apply to our operation the document is being returned. (Not applicable for Controlled Stations)

To be signed by the Controlled Document Recipient or their designee.

Signature: Louise Garcia Date: 5/18/01

5/4/01

TA-55 PLUTONIUM FACILITY
ACCEPTABLE KNOWLEDGE REPORT

REPORT TITLE: Process Acceptable Knowledge Summary Report for Nitrate Operations at TA-55

REPORT NUMBER: TWCP-AK-2.1-005,R.2

WASTE GENERATED FROM PROCESS/STATUS CODES: AL, AO, AP, AS, AT, ATL, BAC, BF, BL, BM, BU, CC, CD, CF, CH, COD, COL, CPOD, CR, DF, DP, DS, ED, ETD, EV, FA, FC, FX, GMS, HC, HCD, HD, HGMS, HP, HRA, IA, IS, LC, LG1, LG2, LR, MAG, MAS, MB, MELL, MF, ML, MPD, NC, NL, NR, OD, OH, OY, PA, PAF, PR, PS, PT, PTS, RB, RBJ, RC, RCM, RFX, RO, RR, SC, SP, SSD, SX, TDC, UPS, US, US2, VC, VP1, VP2, VP3, VUL, ZD

EFFECTIVE DATE: _____

NEXT REVIEW DATE: _____

DOCUMENT PREPARER:

_____ _____
NAME DATE

APPROVALS:

_____ _____
INDEPENDENT TECHNICAL REVIEWER/EDITOR DATE

_____ _____
SITE PROJECT MANAGER DATE

_____ _____
WASTE CERTIFICATION OFFICIAL DATE

_____ _____
SITE PROJECT QA OFFICER DATE

_____ _____
FACILITY REPRESENTATIVE DATE

© 2000, 2001 University of California

P/S Code	P/S Name	Process AK Summary Report and Report Section*	
ED	Cascade Dissolver	Nitrate Operations	3.5.2, Att. 4
ETD	Experimental Thermal Decomposition	Nitrate Operations	3.5.1, 3.5.6, Att. 4
EV	Evaporator	Nitrate Operations	3.5.4, Att. 4
FA	Americium Processing	Nitrate Operations	3.5.3, 3.5.6, Att. 4
FC	Canning	Nitrate Operations	3.5.3, 3.5.6, Att. 4
FX	Cement to Drum	Nitrate Operations	3.5.6, Att. 4
GMS	Open gradient Magnetic Separation	Nitrate Operations	3.5.1, Att. 4
HC	Calcination	Nitrate Operations	3.5.3, 3.5.6, Att. 4
HCD	Hydroxide Cake Dissolution	Nitrate Operations	3.5.2, Att. 4
HD	Hydroxide Cake Dissolution	Nitrate Operations	3.5.2, Att. 4
HGMS	High Gradient Magnetic Separation	Nitrate Operations	3.5.1, 3.5.6, Att. 4
HP	Cement Fixation	Nitrate Operations	3.5.5, Att. 4
HRA→ IA	Impure Americium Holding for Discard	Nitrate Operations	3.5.5, 3.5.6, Att. 4
IB	Matrix Study of Pyrochemical Salts	Miscellaneous Operations	3.5.6, Att. 4
IS	Incinerator	Nitrate Operations	3.5.1, Att. 4
LC	Uranium/plutonium Processing	Nitrate Operations	3.5.2, 3.5.6, Att. 4
LG1	Noncombustible Leach	Nitrate Operations	3.5.2, 3.5.6, Att. 4
LG2	Hydroxide Cake Dissolution	Nitrate Operations	3.5.2, 3.5.6, Att. 4
LR	Ion Exchange	Nitrate Operations	3.5.3, Att. 4
MAG	Magnetic Separation	Nitrate Operations	3.5.1, Att. 4
MAS	RD&D Experimental Processes	Nitrate Operations	3.5.1, Att. 4
MB	Nitric Dissolution of Molten Salts	Chloride Operations Nitrate Operations	3.5.2, Att. 4 3.5.2, 3.5.6, Att. 4
MELL	Mediated Electro-Oxidation of LLW	Nitrate Operations	3.5.2, Att. 4
MF	Metals Furnace	Nitrate Operations	3.5.1, 3.5.6, Att. 4
ML	Non Pu Metal Leach	Nitrate Operations	3.5.2, Att. 4
MPD	Cascade Dissolver	Nitrate Operations	3.5.2, Att. 4
NC	Noncombustible Leach	Nitrate Operations	3.5.2, Att. 4
NL	Noncombustible Leach	Nitrate Operations	3.5.2, 3.5.6, Att. 4
NR	Nitrate Recovery	Nitrate Operations	3.5.2, 3.5.6, Att. 4
OD	Oxide Dissolution	Nitrate Operations	3.5.2, Att. 4

present in the process wastes, based on subject matter expert (SME) interviews and any ~~available data~~ relevant record

The TWCP Records Management/Document Control (RMDC) Center contains copies of the documents referenced in this report. Any Unclassified Controlled Nuclear Information (UCNI) will be contained in these records, and will not be included in this report. Such records are identified as UCNI in the Acceptable Knowledge Roadmap (Attachment 1).

This process AK summary report is part of a set of closely related reports about TRU-waste generating activities at TA-55. For convenience in organizing AK for plutonium processing at this facility, the processes were categorized into six arbitrary operational areas. The multiple processes in each area are then described in detail in the following six process AK reports for plutonium:

- *Process Acceptable Knowledge Summary Report for Chloride Operations at TA-55* (TWCP-AK-2.1-002)
- *Process Acceptable Knowledge Summary Report for Metal Operation Processes at TA-55* (TWCP-AK-2.1-003)
- *Process Acceptable Knowledge Summary Report for Miscellaneous Operations at TA-55* (TWCP-AK-2.1-004)
- *Process Acceptable Knowledge Summary Report for Nitrate Operations at TA-55* (TWCP-AK-2.1-005) (this report)
- *Process Acceptable Knowledge Summary Report for Pyrochemical Processes at TA-55* (TWCP-AK-2.1-006)
- *Process Acceptable Knowledge Summary Report for Special Processing at TA-55* (TWCP-AK-2.1-007)

Each process AK report contains information on multiple individual processes that are assigned unique identifiers called process/status (P/S) codes. For example, nitrate operations include over 80 individual processes that are each assigned a P/S code, as listed on the cover page of this report. The search and compilation of AK information was based on P/S code because that is the most detailed level of process information generally recorded in waste generation records. The process AK reports frequently cross-reference one another because P/S codes in one operational area often provide the material feed for P/S codes in another area. An index of P/S codes cited in this process AK report follows the list of acronyms; this index lists process descriptions and the primary process AK report in which that P/S code is discussed.

group, waste matrix code, and potential for the presence of hazardous constituents. In the Sampling Plan, TA-55 wastes have been assigned to waste streams based on the waste segregation schemes used by TA-55:

- ~~First~~ By radioisotope content (Pu-238 or Pu-239 material type)
- ~~Then~~ By material matrix (combustible, noncombustible, metal, glass, etc. waste types)
- ~~Then~~ By hazardous waste status (mixed, non-mixed, or special case waste streams)

3.3 Waste Physical Form and Content Description

Wastes generated during nitrate operations are primarily debris wastes and wastes entered into the cement fixation process or sent to the Radioactive Liquid Waste Treatment Facility (RLWTF) at TA-50. General debris waste categories from nitrate operations include

- Cellulose-based waste (for example, paper, cloth)
- Plastic-based waste (for example, gloves, tape, labware)
- Rubber
- Magnesium oxide crucibles
- Metal debris (for example, wire, hose clamps, tools, labware)
- Glass debris

These debris items are contaminated with small amounts of radioactive and chemical substances from nitrate operations. The cemented waste includes cemented organics and cemented inorganics, including emulsified oils.

3.4 Waste Volume and Time Period of Waste Generation

This report covers waste streams generated from 1979, when nitrate operations first began at TA-55, to the present. Process wastes from nitrate operations have different associated EPA hazardous waste numbers (HWNs) depending on the time period during which they were generated. The P/S codes, their time period of generation, and corresponding RCRA codes are shown graphically in Attachment 3, Time Lines.

Waste volumes for each P/S code have not been tracked. Instead, waste items are segregated into similar material types and packaged in waste containers. Waste containers are assigned to waste streams in the Sampling Plan, and waste stream volumes are reported in that document.

3.5 Waste Generation Processes

The following subsections describe the generation of waste by nitrate operations, as well as product and waste outputs to other processes or operations.

thiocyanate, and silver nitrate (CPOD) (TWCP-3548/N-1 and TWCP-3566/N-21). The electrochemical cell used in this process relied on silver acting as a catalyst for the dissolution of plutonium. Waste from this process was considered suspect hazardous for the presence of silver and was assigned the EPA HWN D011. This process was replaced in 1994 by a similar electrochemical process (MELL) that used cobalt nitrate or cerium nitrate in place of silver nitrate to reduce the generation of hazardous and mixed waste at TA-55 (TWCP-3548/N-1 and TWCP-3566/N-33).

Two dissolution processes were designed to remove excess silica from either solid residues during dissolution or from plutonium-bearing solutions after dissolution (TWCP-3567/N-34 and N-35). In both these processes, silica was removed from solutions prior to sending them to purification. One process involved the following steps: adjusting the acidity of the feed solution using nitric acid; distilling to concentrate the solution; adjusting the plutonium valence (to +4) with hydrogen peroxide; heating the solution until the excess hydrogen peroxide is destroyed; and filtering the solution to remove the silica solids (TWCP-3567/N-34). The solution from this process went to anion exchange purification process. The second silica-removal process used a hydrofluorinator with a potassium hydroxide scrubber solution (TWCP-3567/N-35). The solution from this process was sent to the TA-50-1 RLWTF via the caustic waste line if the plutonium content was below the DL or to the lean residue ion exchange (LR) purification process if the content was above the DL. The filtered silica solids from both processes were re-dissolved if plutonium concentrations were above the DL or disposed to cement fixation (CF) if concentrations were below the DL.

Oxidizing ~~Reducing~~ the plutonium to ~~oxidation state +4~~

Uranium-plutonium oxide mixtures were leached using nitric acid to preferentially dissolve the uranium (UPS) (TWCP-3566/N-19). Aluminum nitrate was added to the solution to complex any fluoride ion that might be present. The uranium-bearing filtrate was disposed to cement fixation (CF). The plutonium-bearing solids were sent to dissolution (ED, MPD, or SP) and then to either an anion-exchange process or the oxalate-precipitation process (OY) for purification.

A caustic (hydroxide) leach process has been used to pretreat electro-refining furnace scrapings from the Rocky Flats Plant and other residues high in chlorides. Chlorides were removed using sodium hydroxide, and the treated residues were then dissolved in nitric and hydrofluoric acid (TWCP-3566/N-26, N-26A, and N-30E). The filtered solids continued through the dissolution process. If the plutonium content in the solution was above the DL, the solution was refiltered (TWCP-3566/N-26). If the plutonium content was below the DL, the caustic solution was disposed to the TA-50-1 RLWTF (TWCP-3566/N-26A).

3.5.3 Purification and Oxide Conversion (P/S codes AO, AP, CC, CH, DF, DS, FA, FC, HC, LR, OH, OY, PR, RB, RBJ, RCM, RFX, RR, SX, and VP3)

A peroxide precipitation process (PR) was used to achieve excellent separation of plutonium from the cationic impurities calcium, chromium, magnesium, cesium, cobalt, and aluminum, as well as americium (TWCP-3567/N-52). Peroxide was added to the oxide dissolution filtrate feed material to convert the plutonium to valence state (+4). Additional peroxide resulted in the precipitation of $[PuO_2]^{+5}$, then $[PuO_4]^{+4}$, and finally Pu_2O_7. The resulting peroxide filter cake was dissolved in nitric acid and the solution was sent to oxalate precipitation (OY). The filtrate solution from the peroxide precipitation was sent to hydroxide precipitation (OH), also known as the peroxide kill process.

Plutonium-bearing solutions generated in the dissolution step are directed to purification for plutonium recovery (TWCP-3548/N-1). Purification consists of both ion exchange and precipitation processes. There are three primary ion exchange processes based on the concentration of plutonium in solution: rich feed (RCM), dissolver solutions (DS), and lean residue (LR). After ion exchange, plutonium-bearing solutions are directed to oxide precipitation and then to an oxidation process. The oxidation process generates plutonium oxide, a stable form of plutonium suitable for storage or further processing into plutonium metal.

The ion exchange processes use resin-filled columns to collect plutonium (P/S codes DS, RCM, LR, RR, RFX) (TWCP-3548/N-1; TWCP-3567/N-41, N-42, N-43, N-44, N-46, N-47, and N-53). The pH of incoming solutions is adjusted with nitric acid and the plutonium is stabilized by changing the plutonium valence state to (+4) using hydrogen peroxide. Other chemicals used to adjust acidity or to "condition" incoming solutions to address the presence of fluoride, silica, metal impurities, or plutonium (+6) include: aluminum nitrate, ferrous ammonium sulfate, hydrogen peroxide, sodium hydroxide, sodium nitrite, sulfuric acid, and urea. Certain intermediate solutions used to condition the ion exchange feed, especially caustic solutions used to "kill" the peroxide, are filtered and then disposed to the TA-50-1 RLWTF if they meet the TA-50-1 WAC.

If solutions high in americium are "conditioned" with hydrogen peroxide, an americium hydroxide precipitate forms when the solutions are dripped into sodium hydroxide to "kill" the peroxide (TWCP-3567/N-55). This precipitate is dissolved using nitric acid, sent through an ion exchange column, and then sent on to the oxalate precipitation process to recover the americium and convert it to americium oxide (P/S codes AO, AP, FA, and SX).

exchange resins are disposed to cement fixation (CF) (TWCP-3567/N-41 through N-53).

Chemicals used in the dissolution steps are listed in Table 5 in Section 3.5.3. Chemicals used in these steps that are covered by 40 CFR Part 261, including Appendix VIII of those regulations, are (1) hydrofluoric, nitric, and oxalic acid; (2) sodium hydroxide, and (3) hydrogen peroxide (an oxidizer)(TWCP-3567/N-41 through N-47, N-50, N-51, N-53, N-54, and N-55; TWCP-3568/N-81). EPA HWNs D001 and D002 do not apply to the solid wastes because of the use of acids, bases and an oxidizing solution in these processes because there is no free liquid in these wastes. Any excess hydrogen peroxide was reacted with base, sodium hydroxide.

However, EPA HWNs apply to most of these P/S codes as a result of the presence of regulated chemicals in the material feed (see Table 1 in Section 3.6) or as a result of contamination introduced from the use of laboratory equipment or supplies or from glovebox maintenance operations (discussed in section 4.2). For example, RCRA-regulated hazardous constituents introduced to P/S codes DS and LR with the hydroxide filtrate cakes include cadmium (D006), chromium (D007), lead (D008), mercury (D009), and silver (D011) (TWCP-3567/N-39 and N-40). Similarly, plutonium oxide from the vault may have been roasted and blended in P/S codes RB and RBJ to provide a more homogeneous feed for the metal preparation line (P/S code MP); these oxides may have contained cadmium (D006), chromium (D007), and lead (D008) (TWCP-3567/N-56, N-57, N-57A, and N-57B). Leaded gloves were discarded as described in section 3.6.1.

NOTE: For some of these P/S codes, no formal procedures could be found and the necessary information was extracted from process flow diagrams and SME input. More detailed descriptions of such P/S codes that are included in this purification section are provided in section 3.5.6, as follows: P/S codes AO, AP, CC, CH, DF, FA, FC, HC, and VP3.

3.5.4 Evaporator (P/S code EV)

Plutonium-poor ion exchange effluents and oxalate precipitation filtrates are sent to the evaporators to re-concentrate plutonium, if possible, and reduce the volume of disposed waste (TWCP-3548/N-1, TWCP-3568/N-61 through N-65). General facility maintenance solutions (e.g., wet vacuum water, mop water, chiller water) are also sent to the evaporator if they do not meet the TA-50-1 WAC (TWCP-3568/N-76). The wet vacuum water and chilled circulating water are contaminated with nitric acid, hydrochloric acid, or caustic solutions having the same characteristics as those sent to the TA-50-1 RLWTF, only richer in

Solvents ~~liquids~~ are emulsified by the addition of a surfactant before they are mixed with the neutralized evaporator bottom solutions (TWCP-3568/N-74). The miscellaneous solutions were treated in a manner much like the evaporator bottoms solution.

The discard of impure americium oxide from P/S code AO (section 3.5.6.1) was mostly accomplished by stirring it into a one-gallon can of evaporator bottom cement paste (up to 140 g americium/can). When all cement was being stirred in one-gallon cans, the americium-containing can was placed in the center of the middle layer of cans in a drum to provide maximum shielding. When storage of the impure americium hydroxide cakes in P/S code AO became a radiation exposure problem, a significant portion of the stored material was placed in P/S code IA until the material could be immobilized in cement for disposal. P/S code IA was active from April 1986 to December 1988. It did not involve any type of processing and, therefore, did not generate any waste.

In July 1988, the cementation process was changed from stirring the cement in one-gallon cans to stirring cement monoliths in 55-gallon drums attached to the glovebox (under P/S code CF). Although P/S code HP is still open, it has not been used since July 1988.

NOTE: The strategy proposed for shielding americium-containing cans, after the operation converted to 55-gallon drum monoliths, was to push the one-gallon americium-containing can down into the wet cement paste in the drum. However, the SME did not believe that it was ever attempted.

P/S code CF began in August 1988 and continues to the present time. Wastes collected for disposal in 55-gallon drums include aqueous and organic ~~liquids~~ solvents from analytical chemistry; evaporator bottoms and evaporator salts; fine particulate materials, such as salts filtered from solutions, leached filter paper residues, and ash; oils, organic petroleum-based ~~liquids~~ solvents, and spent ion exchange resins. As was the case for P/S code HP, the primary feed to this process has been the evaporator bottoms solutions. In 1996, the cementation process again converted from gypsum cement powder (last used in June 1996) back to Portland cement powder (reuse began in July 1996). A driver for this change was the finding that the gypsum-cemented waste could not meet the Toxicity Characteristic Leaching Procedure (TCLP) limits for chromium (TWCP-4233). In addition, tests showed that this waste form barely met the TCLP for cadmium and lead. In contrast, Portland cement was easily able to retain these three problem metals during the leaching test.

Chemicals used in the cement fixation step under P/S codes CF and HP include: cement accelerator, gypsum cement, nitric acid (pH

adjustment), organic ~~liquid~~ solvents emulsifier (which acts as a surfactant), Portland cement, silicon defoamer, sodium citrate retarder, and sodium hydroxide (pH adjustment) (TWCP-3568/N-69, N-71, N-72, N-74). Phthalate buffer solution for pH 4 and phosphate buffer solution for pH 7 were used in P/S code CF only. EPA HWNs D001 and D002 do not apply to the solid wastes from cement fixation as a result of these chemicals because there is no free liquid in these wastes.

Although RCRA-regulated organics and metals were not used in either of the two cement fixation processes, regulated chemicals were present in the materials sent to be immobilized in cement. Therefore, the waste streams generated by these processes may contain RCRA-regulated solvents and metals above the regulatory limits.

- Analysis of evaporator bottoms at TA-55 between 1994 and 1998 and statistical evaluation of analytical results using control charts have also shown that chromium (D007), lead (D008) and mercury (D009) are above the regulatory limit for this waste (TWCP-3568/N-66).

- Hydroxide cakes from the chloride operations, which started in 1982 (TWCP-3567/N-40), are introduced to the nitrate operations in the dissolution step (TWCP-3567/N-39). Therefore, RCRA-regulated hazardous constituents associated with the feed materials from the chloride operations as well as those derived from other nitrate dissolution processes may carry through to cement fixation (TWCP-3567/N-38). The hazardous constituents contained in the hydroxide cakes from chloride operations include cadmium (D006), chromium (D007), lead (D008), mercury (D009), and silver (D011) (TWCP-3567/N-39 and N-40). The use of silver in chloride operations ended at the end of 1993. After 1993, heavy metal analyses have been conducted on the solutions, with chromium, lead, cadmium, and mercury being detected at levels above the regulatory levels at times.

- Gypsum cement was found to leach heavy metals above regulatory levels, but the Portland cement does not (N-66/TWCP-3568). Thus, the chromium, lead and mercury are no longer considered hazardous after 1995. In addition, arsenic, barium, cadmium, selenium and silver concentrations were all below the regulatory threshold limits for these metals.

- The presence of RCRA constituents in waste analytical chemistry solutions was noted in the data packages beginning in 1990. The RCRA-regulated organic chemicals found in these solutions included carbon tetrachloride (D019), n-butanol (F003), acetone (F003), methanol (F003), tetrachloroethylene (D039, F003), xylene (F003),

one of the plutonium ion exchange columns for recovery of the plutonium.

RCRA-regulated organic solvents and metals were not used in this process and were not present in the feed material from P/S code SX; therefore, there would not be any RCRA-regulated solvents or metals in the waste streams generated by this process. Chemicals, such as hydroxylamine nitrate, were used to adjust the valence of the plutonium. The waste stream generated by this process consisted of the usual glovebox waste items, such as glass vessels, HEPA filters, and rags. Leaded gloves were disposed of as described in Section 3.6.1.

3.5.6.3 Anode Heel Dissolution (AS)

This process was performed from 1980 to November 1988. The plutonium oxide generated as the result of burning anode heels in P/S code BU was dissolved in a nitric acid/hydrofluoric acid mixture or in calcium fluoride, and filtered to remove the nondissolving residues. These residues were dried and collected and sent after assay to P/S code SP for more rigorous dissolution. The filtrate was sent to the rich residue ion exchange column (RR) for purification.

Although RCRA-regulated organic solvents and metals were not used in this process, residual RCRA-regulated heavy metals present in the electrorefining step were concentrated in the anode heels. Therefore, any RCRA-regulated metals in the anode heel feed could also be present in the waste generated by this process. These are cadmium ~~(D005)~~, D006 chromium (D007), lead (D008), and silver (D011). The waste generated by this process includes glassware, plastic filter boats, cleaning rags, HEPA filters, metal cans, and brushes. Leaded gloves were disposed of as described in Section 3.6.1.

3.5.6.4 Bacterial Decomposition of Cellulose Items (BAC)

This process was performed from mid-1995 to mid-1996 and was an alternative to thermal decomposition. The process involved the decomposition of cellulose rags using a living organism to digest the cellulose to glucose and other byproducts. Cheesecloth rags, bacteria, and water were added to a flask and allowed to sit while the bacteria digested the rags. The resulting solution was sent to the lean residue ion exchange (LR).

RCRA-regulated organics and metals were not used in this process and were not introduced by the feed materials; therefore, there would not be any RCRA-regulated solvents or metals in the waste streams generated by this process.

3.5.6.5 P/S code BF

Activities under this P/S code were nearly identical to those under P/S code BU because the feed was also anode heel metal. Heels were burned under P/S code BF between September 1985 and November 1986 came from the electrorefining step (P/S codes ER or SS) at TA-55. Although RCRA-regulated organic solvents and metals were not used in this process, residual RCRA-regulated heavy metals present in the electrorefining step were concentrated in the anode heels. Therefore, any RCRA-regulated metals in the anode heel feed could also be present in the waste generated by this process. These are cadmium (D005), chromium (D006), lead (D007), and silver (D011). The waste generated by this process includes glassware, plastic filter boats, cleaning rags, HEPA filters, metal cans, and brushes. Leaded gloves were disposed of as described in Section 3.6.1.

3.5.6.6 Blending (BL)

This process was performed from 1979 to May 1988. Various lots of plutonium oxide in the vault or in-house P/S codes were fed into this process. Each container of oxide was weighed, opened, and screened to remove oversized material. The oversized material was ground with a mortar and pestle and rescreened. The individual contents were combined and blended in a V-blender to make a homogeneous lot of feed oxide that was sent as feed to the roasting and blending process (RB).

This is a physical process in which no additional materials or chemicals are used. RCRA-regulated organics and metals were not used in the process and were not introduced with the feed material; therefore, there would not be any RCRA-regulated solvents or metals in the waste streams generated by this process. The waste generated consisted of typical glovebox waste items, such as HEPA filters, glass, ceramic boats and plates, cleaning rags, brushes, metal containers and equipment, and plastics. Leaded gloves were disposed of as described in Section 3.6.1.

3.5.6.7 Button Burning (BU)

This process was performed from approximately 1979 to 1986. Metal buttons were received from offsite DOE facilities (usually Hanford, but possibly Rocky Flats as well). The metal buttons were burned in a furnace at about 600°C. The oxide produced from six buttons was combined and blended to make up a uniform feed lot for the anode heel dissolution process (AS).

Although RCRA-regulated organic solvents and metals were not used in this process, residual RCRA-regulated heavy metals present in the electrorefining step were concentrated in the anode heels. Therefore, any RCRA-regulated metals in the anode heel feed could also be present in the waste generated by this process. These are cadmium (D005),[6] chromium (D006),[7] lead (D007),[8] and silver (D011). The waste generated by this process includes glassware, plastic filter boats, cleaning rags, HEPA filters, metal cans, and brushes. Leaded gloves were disposed of as described in Section 3.6.1.

3.5.6.8 Calcination (CC)

This process was performed from 1979 to November 1988. Plutonium oxalate cakes from the oxalate precipitation process (OY) were calcined by heating in air in a furnace to form pure plutonium oxide. The oxide became feed for the oxide reduction process.

This was a physical process, not involving any chemical reagents. RCRA-regulated organic solvents and metals were not used in this process and were not introduced by the feed materials. The oxalate cakes were of high purity. Therefore, the waste generated from this process would not contain any RCRA-regulated organic compounds or metals. The waste generated from this process consists of the usual glovebox waste items plus metal tools, containers, and equipment; ceramic furnace elements; rags; and brushes.

3.5.6.9 Characterization (CH)

This process was performed from 1979 to February 1989 and received samples of blended lots of oxide from the blending process (BL). Portions of the samples were weighed out for four analyses to demonstrate that the oxide powders met the acceptance criteria for preparation of driver fuel for the Fast

Flux Test Facility (FFTF). The Loss on Ignition Analysis involved heating the powder and measuring the weight loss from driving off adsorbed water and gases. The Surface Area Analysis involved absorption of nitrogen gas on the oxide at liquid nitrogen temperatures. The Particle Size Analysis measured the settling rate of oxide particles dispersed in a viscous, water-soluble liquid ~~by~~ using the absorption of X-rays by the particles. The slurry was discarded to cement fixation (HP). Finally, some of the powder was pressed into pellets and sintered at 160 degrees C before measuring and weighing them for density. The pellets and oxide residues were packaged separately and sent to the vault as archives and eventually recycled. Oxide powders from other sources were also partially characterized many times. The process was also used to make water-dampened plutonium oxide pucks for a criticality experiment and to test the reactivity of calcium nodules from pyrochemical operations.

RCRA-regulated organics and metals were not used in this process and were not introduced by the feed materials. The oxide samples were high-purity materials. Therefore, the waste generated from this process would not contain any RCRA-regulated organics or metals. The waste generated by this process included the usual glovebox waste of HEPA filters, window glass and glass containers, metal containers and tools, brushes, and cleaning rags. Leaded gloves were disposed of as described in Section 3.6.1.

3.5.6.10 Chlorinated Oxide Dissolution (COD)

This process was performed from August 31, 1988 to July 1991. The front-end of this process looked identical to the chlorinated oxide leach process (COL). Chloride pyrochemical salts were dissolved in sodium hydroxide solution and filtered. The filtrate was discarded into the caustic waste line to the TA-50-1 RLWTF or immobilized in cement (CF). The dried plutonium oxide cake was dissolved in a nitric acid-hydrofluoric acid mixture as part of this process, or sent to a cascade dissolver (ED). The solution from the acid dissolution step was filtered and the solids were returned to the dissolution step. The solution volume was reduced by distillation. The distillate was processed in one of the ion exchange columns. The concentrated solution was refiltered and all of the filter residues were sent to a cascade dissolver (ED) or to the filter residues dissolution process

(SP). The filtrate was sent to one of the ion exchange columns for recovery.

RCRA-regulated organics and metals were not used in this process and were not introduced with the feed materials. The pyrochemical salts should be of high purity. Therefore, the waste generated from this process would not contain any RCRA-regulated organics or metals.

3.5.6.11 Chlorinated Oxide Leach (COL)

This process was performed from June 13, 1989 to June 1991. Chlorinated oxides or plutonium oxide contained in chloride-based pyrochemical salts from Rocky Flats were subjected to leaching with sodium hydroxide. The chloride salts would dissolve in the solution that would then be filtered. If the filtrate met the TA-50-1 WAC, it would be discarded into the process caustic waste line to the TA-50-1 RLWTF. If not, it would be discarded to cement fixation (CF). The cake containing the plutonium oxide would be dried and sent to the cascade dissolver (ED) or to chlorinated oxide dissolution (COD).

RCRA-regulated organics were not used in this process and were not introduced with the feed materials. RCRA-regulated metals also were not used in this process. However, the Rocky Flats salts that fed this process would contain any barium present in their electrorefining salts. Barium is not expected to be present above the regulatory limits in the waste generated by this process; however, without analytical results or other acceptable information to support this, the EPA HWN for barium (D005) is assigned to the liquid waste sent to cement fixation (CF) (TWCP-3568/N-83). The waste generated by this process consists of the usual glovebox waste, such as glassware, plastic filter boats and tubing, and rags. Leaded gloves were disposed of as described in Section 3.6.1.

3.5.6.12 DS Furnace and Oxide Prep (DF)

This process was performed from 1979 to April 1990. The wet plutonium oxalate cake from the ion exchange process (DS) was placed in a metal can and heated in air in a furnace to dry the cake and then decompose the oxalate to an oxide product. The oxide product was returned to the ion exchange process (DS) prior to being sent to the vault.

mixture was filtered to separate insoluble residues, which were dried and discarded as solid TRU waste. The plutonium nitrate-containing filtrate was sent to P/S code LR for purification. This filtrate may have contained chromium, cadmium, and/or lead that was leached out from the stainless steel, shielding, or other metal feed materials (TWCP-3568/N-84).

RCRA-regulated organics were not used in this process and were not introduced with the feed materials (TWCP-3568/N-81). Therefore, there would not be any RCRA-regulated solvents in the waste streams generated by this process. The metal feed materials generally consisted of steel, stainless steel, aluminum, and copper. Any RCRA-regulated metals leached from these feed materials would be in the filtrate sent to P/S code LR. However, the leached materials may still contain concentrations of cadmium and/or lead that may leach out above the regulatory limit, resulting in the debris waste requiring the applicable EPA HWNs (D006, D008) (TWCP-3568/N-84). The chromium in stainless steel does not leach out above the regulatory limit. This process generated the usual glovebox waste, plus metal, glass, plastic, plastic filter boats, filter papers, glassware, rags, and brushes (TWCP-3568/N-81).

3.5.6.24 Hydroxide Cake Dissolution (LG2)

This process was active from October 1982 to December 1985. Hydroxide cakes from P/S codes CS and VP3 were dissolved in nitric acid and the solution was filtered. Any residue or filter cake was sent back to the dissolution step. The filtrate containing the plutonium nitrate was sent to P/S code LR for purification.

RCRA-regulated metals and organics were not used in this process; however, during the 1985 time period, certain metals could have been introduced with P/S code CS (from chloride operations), and mercury could have been introduced with the P/S code VP3 feed material. These metals would be found in the nitric acid filtrate, which fed into P/S code LR. Therefore, there would not be any RCRA-regulated solvents in the waste streams generated by this process. However, there may have been cadmium (D005), chromium (D006), mercury (D007), or silver (D011) in the feed material from 1984 through December 1985. This process generated the usual glovebox waste, plus glassware, metal tools and

3.5.6.32 RD&D Pretreatment Study (PTS)

This process was active from January 4, 1990 to February 1992. A variety of residue matrices were pulled into P/S code PTS to be characterized for impurities, state of division, and even pretreatment (milling, grinding, etc.) to achieve a desired state for use in fluoride volatility studies in P/S code CK. Most of the effort was expended on ash from LANL and Rocky Flats.

RCRA-regulated organics and metals were not used in this process, but the ash feed would have been high in heavy metals such that this P/S code would generate waste potentially contaminated with non-volatile heavy metals: barium (D004), cadmium (D005), chromium (D006), lead (D009), and silver (D011). Arsenic, mercury and selenium would not be present because they would have been volatilized. This process generated the typical glovebox waste streams, plus metal tools, containers, and equipment; plastic bags; ceramic furnace elements; ceramic boats; rags; and brushes.

3.5.6.33 Rotary Calciner (RC)

This process has been active from 1985 to the present. Ash from P/S codes IS and TDC and other carbon-containing ash and graphite crucibles are calcined in an oxygen or air stream. This removes organic carbon. The calcined ash is blended and sent to recovery. This process is also used to calcine uranium oxides before uranium separation.

RCRA-regulated organics and metals were not used in this process, but the ash feed would have been high in heavy metals such that this P/S code would generate waste potentially contaminated with non-volatile heavy metals: barium (D004), cadmium (D005), chromium (D006), lead (D009), and silver (D011). Arsenic, mercury and selenium would not be present because they would have been volatilized. This process generated the typical glovebox waste streams, plus metal tools, containers, and equipment; plastic bags; ceramic furnace elements; ceramic boats; rags; and brushes.

3.5.6.34 Oil Recovery (RO)

This process was active from 1979 to March 1989. Vacuum pump oils and other contaminated organics from various

Feed Materials	Potential Presence of RCRA-Regulated Substances	P/S Codes in Nitrate Operations
Miscellaneous materials contaminated with Pu (e.g. sand, slag, tools, crucibles, metal, glass, plastic, labware, scrap, rags, glovebox sweepings, pump oils, HEPA filters, Hanford [Hanford materials])	Typically contaminated with RCRA-regulated heavy metals Ag, Cd, Hg, Pb and possibly Cr (D006, D008, D009, D011, and D007) get in order	ATL, BAC, CPOD, CR, ED, ETD, GMS, HGMS, HRA, IS (combustible material), LG1 (non-combustible material), MAG, MAS, MELL (cellulosic material), ML (metal equipment), NC (non-combustible material), NL (non-combustible material), PA (glovebox sweepings), PAF, RO (organics), SC, SP, TDC (cellulosic material), VC, ZD
MSE salts	Typically fairly pure, suspect contaminated with barium but no other RCRA substances present	MB, PS
Pu metal or metal alloy, Hanford (Hanford materials)	High purity, no RCRA-regulated substances, unless noted otherwise	ATL, BM, BU, MF, PAF, VP1
Pu oxalates	High purity, no RCRA-regulated substances, unless noted otherwise	CC, DF, HC
Pu oxides, Hanford (Hanford materials)	Variable purity from P/S codes RB, RBJ and others, and from the vault; suspect contaminated with RCRA-regulated heavy metals Cd, Cr and Pb (D006, D007, D008) High purity oxides and material from Hanford from P/S codes CA and MA, and from the vault	ATL, BL, CH, CPOD, DP, ED, FC, HRA, LC, MPD, OD, PT, RB, RBJ, SP, SSD, UPS, US, US2
Pyrochemical salts	Typically fairly pure, no RCRA substances other than Ba are present	COD, COL, MB

Table 2. P/S Codes with Radionuclides Other Than Pu in Feed Materials

P/S code in nitrate operations	Radionuclide in feed material
AO, AP, FA, PR	Am-241
ATL	Np-237
CF	Am-341, U, Th-232
HP, IA, OH, SX	Am-241
LC, RC, UPS, US	U
PT	Th-232

No K or P listings apply to solid wastes generated from any of the P/S codes in this report because no K-listed or P-listed chemicals were present in the feed materials, chemicals or equipment used in these processes. All drums destined for WIPP will undergo headspace gas sampling and analysis to confirm the presence of listed solvents.

4.2 Toxicity Listings

D008 (lead) applies to all P/S codes due to the potential to generate leaded gloves. Prior to 1987, leaded gloves were not segregated from combustible debris. Between 1987 and May 1992, they were segregated and discarded in the metal debris waste stream. Since May 1992, they have been routinely segregated and assigned to a leaded-glove waste stream, still under the originating P/S code (TWCP-4166). Lead-containing debris waste is segregated and packaged separately from other debris waste (TWCP-3567/N-39); these wastes also are assigned D008.

Waste from most P/S codes in nitrate operations carry several EPA HWNs due to the presence of metals with toxicity characteristics in the feed materials. P/S codes covered by this report carry the following codes for heavy metals:

AL	D005, D006, D007, D008, D011
AP	D007, D009
AS	D006, D007, D008, D011
AT	D005, D006, D007, D008, D011
ATL	D005, D006, D007, D008, D011
BF	D006, D007, D008, D011
BU	D006, D007, D008, D011
CD	D006, D007, D008, D009, D011
CF	D007, D008 , D009, D011, D019, D021, D022, D039
COL	D005
CPOD	D011
DS	D006, D007, D008, D009, D011
ED	D005, D006, D007, D008, D011
ETD	D005, D006, D007, D008, D011
EV	D006, D007, D008, D009, D011
FX	D006, D007, D008, D009, D011
HCD	D006, D007, D008, D009, D011
HD	D006, D007, D008, D009, D011
HGMS	D006, D007, D008, D009, D011
HP	D007, D008, D009, D011, D019, D021, D022, D039
HRA	D004, D005, D006, D007, D008, D009, D010, D011
IA	D006, D007, D008, D009, D011

8.0 VERIFICATION THAT THERE ARE NO POLYCHLORINATED BIPHENYLS (PCBs) IN THE WASTE STREAM

No PCBs were introduced into the nitrate operations, based on documentation in TA-55 procedures reviewed during the AK investigation and summarized in the process inputs listed in Table 1, Table 5, and Attachment 4. In the cement fixation process (P/S codes CF and HP), oils are sometimes added to drums of cemented waste. There is no indication these oils contain PCBs, and they are added to the 55-gallon drums of cement in small quantities (maximum of 6 liters [TWCP-3568/N-74]). The oils are primarily vacuum pump oils, along with some oils used in heat-treating (cooking or silicone oils) or in grinding (TWCP-3568/N-82). None of these oils are known to contain PCBs. All transformers known to contain PCBs have been tracked from the time of startup of TA-55 in 1978. Whenever any transformer oil is drained, it is handled by a subcontractor who is wholly responsible for its disposal. This oil does not enter the LANL disposal operations.

8.0 CITED PROCEDURES AND REQUIREMENTS DOCUMENTS

- 40 CFR Part 261, Subpart C—Characteristics of hazardous waste, Sections 261.21 (*Characteristic of ignitability*), 261.22 (*Characteristic of corrosivity*), 261.23 (*Characteristic of reactivity*), and 261.24 (*Toxicity characteristic*)
- 40 CFR Part 261—Identification and Listing of Hazardous Wastes
- 40 CFR Part 261, Subpart D—Lists of hazardous waste, Sections 261.31 *(Hazardous wastes from non-specific sources),* 261.32 *(Hazardous wastes from specific sources),* and 261.33 *(Discarded commercial chemical products, off-specification species, container residues, and spill residues thereof)*
- 49 CFR Subpart C—Segregation and separation chart of hazardous materials. Section 177.848, *Segregation of hazardous materials*
- *Acceptable Knowledge Documentation* (TWCP-QP-1.1-021,R.5)
- *Nonconformance Reporting and Tracking* (TWCP-QP-1.1-007)
- *Reconciliation of Visual Examination and Radiography Information* (TWCP-QP-1.1-028)
- *Waste Acceptance Criteria for the Waste Isolation Pilot Plant* (DOE/WIPP-069)
- *Waste Analysis at Facilities that Generate, Treat, Store and Dispose of Hazardous Waste* (EPA/OSWER 9938.4-03)
- Record Management TWCP-QP-1.1-004

5/7/01 Jm

TA-55 PLUTONIUM FACILITY
ACCEPTABLE KNOWLEDGE REPORT

REPORT TITLE: Process Acceptable Knowledge Summary Report for Nitrate Operations at TA-55

REPORT NUMBER: TWCP-AK-2.1-005,R.2 (LA-UR-01-) HRA

WASTE GENERATED FROM PROCESS/STATUS CODES: AL, AO, AP, AS, AT, ATL, BAC, BF, BL, BM, BU, CC, CD, CF, CH, COD, COL, CPOD, CR, DF, DP, DS, ED, ETD, EV, FA, FC, FX, GMS, HC, HCD, HD, HGMS, HP, IA, IS, LC, LG1, LG2, LR, MAG, MAS, MB, MELL, MF, ML, MPD, NC, NL, NR, OD, OH, OY, PA, PAF, PR, PS, PT, PTS, RB, RBJ, RC, RCM, RFX, RO, RR, SC, SP, SSD, SX, TDC, UPS, US, US2, VC, VP1, VP2, VP3, VUL, ZD

EFFECTIVE DATE: _____

NEXT REVIEW DATE: _____

DOCUMENT PREPARER:

_____ _____
NAME DATE

APPROVALS:

_____ _____
INDEPENDENT TECHNICAL REVIEWER/EDITOR DATE

_____ _____
SITE PROJECT MANAGER DATE

_____ _____
WASTE CERTIFICATION OFFICIAL DATE

_____ _____
SITE PROJECT QA OFFICER DATE

_____ _____
FACILITY REPRESENTATIVE DATE

© 2000, 2001 University of California

HISTORY OF REVISIONS

Revision No.	Date	Pages Revised	Reason for Change
0	06/23/00	—	New report (TWCP-03940)
1	12/04/00	All	Make report a controlled document and respond to CAR-00-036
2		All	Respond to CBFO review comments +
			update to include new AK information

CONTENTS

Section **Page**

ACRONYMS iv

TA-55 PROCESS/STATUS (P/S) CODE INDEX vi

PROCESS ACCEPTABLE KNOWLEDGE SUMMARY x

1.0 INTRODUCTION 1

2.0 METHODOLOGY USED TO SEARCH FOR AK RECORDS 1

3.0 DESCRIPTION OF THE PROCESS WASTE 3
3.1 Facility and Mission 3
new 3.2 → 3.~~2~~3 Waste Physical Form and Content Description 3
3.~~3~~4 Waste Volume and Time Period of Waste Generation 3
3.~~4~~5 Waste Generation Processes 4
3.~~5~~6 Material Inputs to the Waste Generation Process~~es~~ 42

4.0 ASSIGNMENT OF EPA HAZARDOUS WASTE NUMBERS 47
4.1 F, K, and P Listings 47
4.2 Toxicity Listings 50

5.0 VERIFICATION THAT IGNITABLE, REACTIVE, AND CORROSIVE WASTES WERE EXCLUDED 51

6.0 VERIFICATION THAT INCOMPATIBLE CHEMICALS WERE PROHIBITED 53

7.0 VERIFICATION THAT THERE ARE NO COMPRESSED GASES, FREE LIQUIDS, NONRADIONUCLIDE PYROPHORICS, SEALED CONTAINERS GREATER THAN FOUR LITERS IN VOLUME, OR >1% RADIONUCLIDE PYROPHORICS 53

8.0 VERIFICATION THAT THERE ARE NO POLYCHLORINATED BIPHENYLS (PCBs) IN THE WASTE STREAM 54

9.0 CITED PROCEDURES AND REQUIREMENTS DOCUMENTS 54

Table

1 Process Feed Material for Nitrate Operations 43
2 P/S Codes with Radionuclides Other Than Pu in Feed Materials 44
3 Average Isotopic Content of Plutonium Material Types and Enrichments 45
4 Secondary Radionuclides in Process Wastes 45
5 Chemical Inputs to Processes Described in This Report 48

Attachments

1 Acceptable Knowledge Roadmap (19 pages)
2 LANL and TA-55 Site Maps (2 pages)
3 Timeline for Nitrate Operations (10 pages)
4 Process Inputs and Outputs (15 pages)
5 Generalized Process Status Diagram for Nitrate Processes (1 page)

ACRONYMS

AK	acceptable knowledge
CFR	*Code of Federal Regulations*
CSMO	Central Scrap Management Office
D	RCRA hazardous waste number prefix for wastes with hazardous characteristics, defined in 40 CFR Subpart C, Sections 261.21 to 261.24
DL	discard limit
DOE	U.S. Department of Energy
DWLS	Discardable Waste Log Sheet
EPA	U.S. Environmental Protection Agency
F	RCRA hazardous waste number prefix for hazardous wastes from non-specific sources, defined in 40 CFR Subpart D, Section 261.31
FFTF	Fast Flux Test Facility
HEPA	high efficiency particulate air
HWN → K	RCRA hazardous waste number prefix for hazardous wastes from specific sources, defined in 40 CFR Subpart D, Section 261.32
LANL	Los Alamos National Laboratory
LLW	low-level [radioactive] waste
MSE	molten salt extraction
MT	material type
P	RCRA hazardous waste number prefix for acute hazardous waste defined in 40 CFR Subpart D, Section 261.33
PCB	polychlorinated biphenyl
PF-4	Plutonium Facility, Building 4
P/S [code]	process status [code]
PVC	polyvinyl chloride
QA	quality assurance
R&D	research and development
RCRA	Resource Conservation and Recovery Act
RD&D	research, development, and demonstration
RLWTF	Radioactive Liquid Waste Treatment Facility
RMDC	Records Management/Document Control
Sampling Plan	*Los Alamos National Laboratory Transuranic Waste Characterization Sampling Plan* (TWCP-PLAN-0.2.7-001)
SME	subject matter expert
SOP	safe/standard operating procedure
TA	technical area
TOPO	trioctyl phosphate oxide
TRU	transuranic
TWCP	Transuranic Waste Characterization/Certification Project
UCNI	Unclassified Controlled Nuclear Information
WAC	waste acceptance criteria
WIPP WAC	*Waste Acceptance Criteria for the Waste Isolation Pilot Plant* (DOE/WIPP-069)
WIPP WAP	Attachment B, Waste Analysis Plan, to the *Hazardous Waste Facility Permit Issued to the Waste Isolation Pilot Plant* (EPA No. NM4890139088)

Replace 3.4 with 3.5

TA-55 PROCESS/STATUS (P/S) CODE INDEX

Note: This index indicates the main process AK summary report and report section that covers each P/S code mentioned in this report.

P/S Code	P/S Name	Process AK Summary Report and Report Section*	
AL	Ash Leach	Nitrate Operations	3.4.2, Att. 4
AO	Americium Processing Calcination	Nitrate Operations	3.4.3, 3.4.6, Att. 4
AP	Americium Purification	Nitrate Operations	3.4.1, 3.4.6, Att. 4
AS	Anode Heel Dissolution	Nitrate Operations	3.4.2, 3.4.6, Att. 4
AT	Ash Testing	Nitrate Operations	3.4.2, Att. 4
ATL	Advanced Test Line for actinide separation (RD&D)	Nitrate Operations	3.4.2, Att. 4
BAC	Bacterial Decomposition of Cellulose Items	Nitrate Operations	3.4.2, 3.4.6, Att. 4
BF	Unknown name for this P/S code	Nitrate Operations	3.4.6, Att. 4
BL	Blending	Nitrate Operations	3.4.1, 3.4.6, Att. 4
BM	Burning Metal	Nitrate Operations	3.4.1, Att. 4
BU	Button Burning	Nitrate Operations	3.4.1, 3.4.6, Att. 4
CC	Calcination	Nitrate Operations	3.4.3, 3.4.6, Att. 4
CD	Hydroxide Cake Dissolution	Nitrate Operations	3.4.2, Att. 4
CF	Cement Fixation	Nitrate Operations	3.4.5, Att. 4
CH	Characterization	Nitrate Operations	3.4.3, 3.4.6, Att. 4
CK	RD&D Volatile Fluoride Pu Recovery	Miscellaneous Operations	3.4.2, Att. 4
CL	Crucible Processing	Chloride Operations	3.4.2, 3.4.3, Att. 4
CN	C-N-O Analysis	Metal Operation Processes	3.4.1, Att. 4
COD	Chlorinated Oxide Dissolution	Nitrate Operations	3.4.2, 3.4.6, Att. 4
COL	Chlorinated oxide leach	Nitrate Operations	3.4.2, 3.4.6, Att. 4
CPOD	Catalyzed Electrochemical Plutonium Oxide Dissolver	Nitrate Operations	3.4.2, Att. 4
CR	Crushing and Pulverizing	Nitrate Operations	3.4.1, Att. 4
CS	Chloride Solutions	Chloride Operations	3.4.3, Att. 4
CX	Chloride Anion Exchange	Chloride Operations	3.4.2, 3.4.3, 3.4.4, Att. 4
DF	DS Furnace and Oxide Preparation	Nitrate Operations	3.4.3, 3.4.6, Att. 4
DP	Dry Processing	Nitrate Operations	3.4.1, 3.4.6, Att. 4
DS	Ion Exchange	Nitrate Operations	3.4.3, Att. 4

P/S Code	P/S Name	Process AK Summary Report and Report Section*	
VUL	Vessel Unloading	Nitrate Operations	3.4.1, Att. 4
ZD	Scrap Oxide Dissolution	Nitrate Operations	3.4.2, 3.4.6, Att. 4

* Process AK summary reports: Chloride Operations (TWCP-AK-2.1-002,R.~~1~~), Metal Operations (TWCP-AK-2.1-003,R.~~1~~), Miscellaneous Operations (TWCP-AK-2.1-004,R.~~1~~), and Nitrate Operations (this report)

R.2

PROCESS ACCEPTABLE KNOWLEDGE SUMMARY

Waste-generating process: Nitrate Operations

P/S codes: AL, AO, AP, AS, AT, ATL, BAC, BF, BL, BM, BU, CC, CD, CF, CH, COD, COL, CPOD, CR, DF, DP, DS, ED, ETD, EV, FA, FC, FX, GMS, HC, HCD, HD, HGMS, HP, HRA, IA, IS, LC, LG1, LG2, LR, MAG, MAS, MB, MELL, MF, ML, MPD, NC, NL, NR, OD, OH, OY, PA, PAF, PR, PS, PT, PTS, RB, RBJ, RC, RCM, RFX, RO, RR, SC, SP, SSD, SX, TDC, UPS, US, US2, VC, VP1, VP2, VP3, VUL, ZD

Type of waste generated:

Retrievably stored and newly generated, mixed and non-mixed debris; waste immobilized in cement

Site: LANL

Facility Mission (including defense and non-defense programs):

TA-55 has extensive capabilities for the extraction and recovery of plutonium from residues and scraps generated from operations at various LANL facilities and other DOE sites in the defense complex. The recovered plutonium is converted into pure plutonium feedstock. These manufacturing and recovery operations, associated maintenance operations, and TA-55 plutonium research are the sources of TRU waste contaminated scrap, residues, and debris generated at TA-55. The scrap and residues are processed to recover as much plutonium as practicable before disposal. Wastes from nitrate operations are generated from plutonium recovery and purification for defense and non-defense programs; these wastes are generated and produced in the same rooms and gloveboxes and so were not segregated until August 27, 1998.

Area(s) or building(s) where the process waste was generated (including operations carried out in those areas):

Process wastes from nitrate operations are generated in Building PF-4, Rooms 208, 401, 409, 420, and 434, of the TA-55 Plutonium Facility. Plutonium operations included reclaiming plutonium from scrap and residues produced from numerous feed sources.

Description of the process waste (physical form and typical content description):

Waste from nitrate operations consists primarily of debris waste, including cellulose-based waste, plastic-based waste, rubber, metal debris, and glass debris; and waste sent for cement fixation.

Summary Category Groups: Waste Matrix Codes:

Description of the waste-generating process:

The overall goal of the nitrate operations is to recover plutonium from metal, metal alloys, scrap, and residues and produce a purified plutonium oxide product or feedstock for conversion to metal. Processes include pretreatment, dissolution, purification, evaporation, and cement fixation.

Process feed:

Plutonium metal or metal alloys, oxides and hydroxide cakes; pyrochemical salts; crucible pieces; anode heels; ash; analytical laboratory solutions; and residues from other DOE facilities.

Radioisotopic content of the waste:

Variety of plutonium material types with different well-defined isotopic compositions. Am-241, Np-237, and U-234 may be present at detectable concentrations as decay products of their plutonium precursors. Some of the processes separate plutonium and americium or Pu and U, so that the waste will usually be enriched in ~~americium~~ Am-241 or U-234, but may also be depleted in some cases.

RCRA Constituents/EPA Hazardous Waste Numbers: Pa 231 + Cs 137 may be present in trace amounts due to their widespread presence as contaminants in TA-55 operations

- F002 and F003: P/S codes CF and HP
- No K or P codes
- D008: all P/S codes in nitrate operations for the generation of leaded gloves
- D005: P/S codes COL, MB
- D005, D006, D007, D008, D011: P/S codes AL, AT, ATL, ED, ETD, IS, MPD, PTS, RC, SC, TDC
- D005, D008: P/S code VUL
- D006, D007, D008: P/S codes OD, SSD
- D006, D007, D008, D009, D011: P/S codes CD, DS, EV, FX, HCD, HD, HGMS, IA, LG2, LR, MELL, OH, RR
- D006, D007, D008, D011: P/S codes AS, BF, BU
- D006, D008: P/S codes LG1, ML, NC, NL, VC
- D006, D008, D040: P/S code RO
- D007: P/S codes PT, SP
- D007, D008 , D009, D011, D019, D021, D022, D039: P/S codes CF, HP
- D007, D009: P/S codes AP, MB
- D009: P/S codes VP1, VP3
- D011: P/S code CPOD

HRA: D005, 6, 7, 8, 9, 11

Process waste volume (if known):

Waste volumes for each P/S code have not been tracked. Instead, waste items are segregated into similar material types and packaged in waste containers. Waste containers are segregated into waste streams in the Sampling Plan, and waste stream volumes are reported in that document.

Years of generation for the process waste: 1979–present

PROCESS ACCEPTABLE KNOWLEDGE SUMMARY REPORT FOR NITRATE OPERATIONS AT TA-55

1.0 INTRODUCTION

All transuranic (TRU) waste must be sufficiently characterized and certified before it is shipped to the Waste Isolation Pilot Plant (WIPP). The U.S. Environmental Protection Agency (EPA) allows use of acceptable knowledge (AK) for waste characterization. EPA uses the term AK in its guidance document, *Waste Analysis at Facilities that Generate, Treat, Store and Dispose of Hazardous Waste.* Attachment B, Waste Analysis Plan, to the *Hazardous Waste Facility Permit Issued to the Waste Isolation Pilot Plant* (EPA No. NM4890139088) (WIPP WAP) defines AK and provides guidelines on how AK should be obtained and documented.

This process AK summary report was prepared in accordance with *Acceptable Knowledge Documentation* (TWCP-QP-1.1-021). The primary purpose of this report is to systematically organize, evaluate, and summarize detailed AK information about individual processes ~~used by~~ that generate TRU waste in the Pu Facility at Tech Area (TA) 55 one of the TRU-waste generators at Los Alamos National Laboratory (LANL). By doing so, this report provides detailed technical support for ~~one~~ several ~~or more~~ waste stream AK summary reports that include these process wastes.

2.0 METHODOLOGY USED TO SEARCH FOR AK RECORDS

The AK search for the information related to ~~Technical Area~~ (TA)-55 waste streams resulting from nitrate operations covered:

- Review of the *Los Alamos National Laboratory Transuranic Waste Characterization Sampling Plan* (TWCP-PLAN-0.2.7-001) (Sampling Plan) that includes information regarding all TRU waste streams

- Review of documents related to waste generation and waste management activities at TA-55 as listed on the Acceptable Knowledge Roadmap (Attachment 1)

- Interviews with personnel involved with waste generation and waste management at TA-55 as listed on the Acceptable Knowledge Roadmap (Attachment 1)

NOTE: Much of the AK information related to nitrate operations is contained in Transuranic Waste Characterization/Certification Project (TWCP) Record Nos. TWCP-3548, TWCP-3566, TWCP-3567, and TWCP-3568. Individual documents in this record have been assigned a separate identifier, N-nn, where nn is a sequential 1- or 2-digit number. This referencing nomenclature is used throughout this report and its attachments.

- Analyses of individual processes generating waste, and evaluations of the potential for Resource Conservation and Recovery Act (RCRA)-regulated constituents to be

3.0 DESCRIPTION OF THE PROCESS WASTE

The following sections describe processes used in nitrate operations, and identify the resulting wastes as well as outputs that are sent to other operations, such as pyrochemical operations, for further processing.

3.1 Facility and Mission

The TA-55 Plutonium Facility (Building PF-4) recovers plutonium from scrap and residues generated throughout the U.S. Department of Energy (DOE) defense complex, and processes it into pure plutonium oxide for conversion to metal and other products. A LANL site map and a detailed map of the buildings at TA-55, including Building PF-4, are shown in Attachment 2.

Most processes in nitrate operations were solely defense related (TWCP-614, TWCP-4162). However, wastes from various processes were not segregated by funding source, waste-generating process, or waste-generating location (e.g., room or glovebox) until recently (August 27, 1998), but rather were segregated and packaged based on waste type (TWCP-887, TWCP-4162, TWCP-4167). Consequently, a single waste container often contains wastes from multiple processes. Some debris waste was also co-mingled with room trash related to these same operations (both defense and non-defense), and was initially boxed as low-level waste. Subsequently, some of these waste boxes were returned for disposal in drums as TRU waste when on-site radioassay results showed them exceeding the low-level discard limits (DLs) (TWCP-816).

3.2 Basis, Rationale, and Assumption Used to Delineate the Waste Strream(s)

3.3 Waste Physical Form and Content Description

Wastes generated during nitrate operations are primarily debris wastes and wastes entered into the cement fixation process or sent to the Radioactive Liquid Waste Treatment Facility (RLWTF). ~~are covered by this process AK report~~. General debris waste categories from nitrate operations include

- Cellulose-based waste (for example, paper, cloth)
- Plastic-based waste (for example, gloves, tape, labware)
- Rubber
- Magnesium oxide crucibles
- Metal debris (for example, wire, hose clamps, tools, labware)
- Glass debris

These debris items are contaminated with small amounts of radioactive and chemical substances from nitrate operations.

3.4 Waste Volume and Time Period of Waste Generation

This report covers waste streams generated from 1979, when nitrate operations first began at TA-55, to the present. Process wastes from nitrate operations have different associated ~~RCRA codes~~ depending on the time period during which they were generated. The P/S codes, their time period of generation, and corresponding RCRA codes are shown graphically in Attachment 3, Time Lines.

Waste volumes for each P/S code have not been tracked. Instead, waste items are segregated into similar material types and packaged in waste containers. Waste containers are assigned to waste streams in the Sampling Plan, and waste stream volumes are reported in that document.

3.5 Waste Generation Processes

The following subsections describe the generation of waste by nitrate operations, as well as product and waste outputs to other processes or operations.

Manufacturing and research operations performed at TA-55 in the production of plutonium also generate plutonium-contaminated scrap and residues. These residues are processed to recover as much plutonium as is practical. TA-55 has extensive capabilities for the extraction and recovery of plutonium from residues and scraps generated from operations at various LANL facilities and other DOE sites. These recovery and manufacturing operations, associated maintenance operations, and TA-55 plutonium research are the sources of TRU waste generated at TA-55.

Detailed background information about the TA-55 plutonium recovery processes can be found in *Waste from Plutonium Conversion and Scrap Recovery Operations* (TWCP-352 and TWCP-886). This report addresses the aqueous nitrate-based recovery processes. new ¶

Same ¶

The primary feed source for the nitrate recovery operations is plutonium residues from other recovery operations (e.g., chloride or pyrochemical), metal preparation, metal fabrication, analytical laboratory operations, and residues from other DOE facilities (TWCP-3548/N-1). The overall goal of the nitrate recovery operations is to recover plutonium from scrap and residues and produce a purified plutonium oxide for conversion to metal. The nitrate recovery operations can be broken down into the following process steps:

- Pretreatment
- Dissolution
- Purification, including conversion to oxide
- Cement fixation

Each of these process categories is described below. The timeframe and EPA hazardous waste numbers (HWNs) associated with each P/S code are shown on

first column overflows to the second column and so on (TWCP-3548/ N-1; TWCP-3566/N-23, N-24, N-24A, and N-25; TWCP-3567/N-36). After dissolution in the dissolvers, the solutions are filtered and then sent to purification. The filtered solids are sent to other dissolution processes if plutonium concentrations are above the DL, or to cement fixation (CF) or disposed as debris waste if concentrations are below the DL.

Another feed material for the nitrate operations is hydroxide filtrate cakes from the chloride operations (TWCP-3548/N-1). This material is dissolved using the standard leach solution, which is then filtered (CD, HCD, HD) (TWCP-3566/N-32). Aluminum nitrate is added to the solution and the solution is re-filtered. The filtrate is sent to purification. Filtered solids are re-dissolved if plutonium concentrations are above the DL, or disposed to cement fixation (CF) if concentrations are below the DL. From 1985 to 1994, the hydroxide cakes from the chloride operations contained cadmium, chromium, lead, mercury, and silver (TWCP-3567/N-39 and N-40). After 1994, silver is not present in the cakes. The debris waste generated from the dissolution of hydroxide cakes from the chloride operations is not expected to contain the listed metals above the regulatory limit. However, without analytical data or other acceptable information confirming that the concentrations of these hazardous constituents are below the regulatory levels, the applicable D-codes (D006, D007, D008, D009, and D011) are assigned pending additional information (TWCP-3568/N-83).

In overview, filtered solids from the dissolution step are re-dissolved until plutonium concentrations are below the DL, then sent to cement fixation (CF); debris items are disposed after the plutonium contamination is removed from the surface by leaching; plutonium-bearing solutions are sent on to purification or to the metal preparation line (P/S code MP) (TWCP-3548/N-1; TWCP-3566/N-21 through N-33; TWCP-3567/N-34 through N-36).

6 Chemicals used in the dissolution steps are listed in Table 5 in Section 3.~~5~~.3. Chemicals used in these steps that are covered by 40 CFR Part 261, including Appendix VIII of those regulations, are (1) ascorbic, formic, hydrochloric, hydrofluoric, nitric, oxalic, and sulfuric acid; (2) potassium and sodium hydroxide, (3) hydrogen peroxide (an oxidizer), and (4) mercuric and silver nitrate (TWCP-3566/N-21, N-22, N-23, N-24, N-25, N-28, N-29, N-30B, N-30C, N-30D, N-30E, N-30F, N-31, N-32, and N-33; TWCP-3567/N-34, N-35, N-36, N-37, and N-37A; TWCP-3568/N-81). EPA HWNs D001 and D002 do not apply to the solid wastes because of the use of acids, bases and an oxidizing solution in these processes because there is no free liquid in these wastes. Mercuric nitrate was used as a catalyst in P/S code VP1, which is accordingly assigned the code for mercury, D009. Silver nitrate was

used in P/S code AT and CPOD, which are therefore assigned the code for silver, D011.

Additional EPA HWNs apply to most of these P/S codes as a result of the presence of regulated chemicals in the material feed (see Table 1 in Section 3.5) or as a result of contamination introduced from the use of laboratory equipment or supplies or from glovebox maintenance operations (discussed in section 4.2). For example, RCRA-regulated hazardous constituents introduced to the nitrate operation at the dissolution step from hydroxide filtrate cakes include cadmium, chromium, lead, mercury, and silver (TWCP-3567/ N-39, N-40). Leaded gloves were discarded as described in section 3.5.1.

NOTE: For some of these P/S codes, no formal procedures could be found and the necessary information was extracted from process flow diagrams and SME input. More detailed descriptions of such P/S codes that are included in this dissolution section are provided in section 3.4.6, as follows: P/S codes AS, BAC, COD, COL, LC, LG1, LG2, MB, NL, NR, PS, PT, SSD, US, US2, VC, VP1, and ZD.

3.5.3 Purification and Oxide Conversion (P/S codes AO, AP, CC, CH, DF, DS, FA, FC, HC, LR, OH, OY, PR, RB, RBJ, RCM, RFX, RR, SX, and VP3)

A peroxide precipitation process (PR) was used to achieve excellent separation of plutonium from the cationic impurities calcium, chromium, magnesium, cesium, cobalt, and aluminum, as well as americium (TWCP-3567/N-52). Peroxide was added to the oxide dissolution filtrate feed material to convert the plutonium to valence state (+4). Additional peroxide resulted in the precipitation of $[PuO_2]^{+5}$, then $[PuO_4]^{+4}$, and finally Pu_2O_7. The resulting peroxide filter cake was dissolved in nitric acid and the solution was sent to oxalate precipitation (OY). The filtrate solution from the peroxide precipitation was sent to hydroxide precipitation (OH), also known as the peroxide kill process.

Plutonium-bearing solutions generated in the dissolution step are directed to purification for plutonium recovery (TWCP-3548/N-1). Purification consists of both ion exchange and precipitation processes. There are three primary ion exchange processes based on the concentration of plutonium in solution: rich feed (RCM), dissolver solutions (DS), and lean residue (LR). After ion exchange, plutonium-bearing solutions are directed to oxide precipitation and then to an oxidation process. The oxidation process generates plutonium oxide, a stable form of plutonium suitable for storage or further processing into plutonium metal.

Hydroxide cakes from the chloride operations, which started in 1985 (TWCP-3567/N-40), are introduced to the nitrate operations in the dissolution step (TWCP-3567/N-39). The outputs from the dissolution of chloride operations hydroxide cakes are sent to P/S code LR or DS. Therefore, RCRA-regulated hazardous constituents associated with the feed materials from the chloride operations may carry through to P/S codes DS and LR (TWCP-3567/N-38). The hazardous metal constituents contained in hydroxide cakes from 1982 (based on the start of the chloride operations) until 1994, include cadmium, chromium, lead, mercury, and silver (TWCP-3567/N-40). Beginning in 1994, only cadmium, chromium, lead, and mercury are expected to be present. These metals may be present above the regulatory limits in the waste streams generated by P/S codes DS and LR. Therefore, the EPA HWNs D006, D007, D008, D009, and D011 are assigned to the waste from 1982 to 1994; and D006, D007, D008, and D009 are assigned from 1994 forward.

In overview, plutonium oxide from the purification step is transferred to the vault for storage or to the metal preparation line; solutions are sent to the evaporator for re-concentration and then returned to ion exchange or sent to P/S codes CF or HP for immobilization in cement. The distillates are disposed to the RLWTF if they meet the TA-50 WAC. Spent ion exchange resins are disposed to cement fixation (CF) (TWCP-3567/N-41 through N-53).

6 Chemicals used in the dissolution steps are listed in Table 5 in Section 3.~~5~~.3. Chemicals used in these steps that are covered by 40 CFR Part 261, including Appendix VIII of those regulations, are (1) hydrofluoric, nitric, and oxalic acid; (2) sodium hydroxide, and (3) hydrogen peroxide (an oxidizer)(TWCP-3567/N-41 through N-47, N-50, N-51, N-53, N-54, and N-55; TWCP-3568/N-81). EPA HWNs D001 and D002 do not apply to the solid wastes because of the use of acids, bases and an oxidizing solution in these processes because there is no free liquid in these wastes.

6 However, EPA HWNs apply to most of these P/S codes as a result of the presence of regulated chemicals in the material feed (see Table 1 in Section 3.~~5~~7) or as a result of contamination introduced from the use of laboratory equipment or supplies or from glovebox maintenance operations (discussed in section 4.2). For example, RCRA-regulated hazardous constituents introduced to P/S codes DS and LR with the hydroxide filtrate cakes include cadmium (D006), chromium (D007), lead (D008), mercury (D009), and silver (D011) (TWCP-3567/N-39 and N-40). Similarly, plutonium oxide from the vault may have been roasted and blended in P/S codes RB and RBJ to provide a more homogeneous feed for the metal preparation line (P/S code MP); these oxides may

filter cakes; pump oils; silica solids; spent ion exchange resins; trioctyl phosphine oxide and iodine in kerosene; uranium oxide; and uranium solutions (TWCP-3568/N-72).

Since 1981, the primary feed to this process was the evaporator bottoms solution. Evaporator bottoms were treated by hydroxide precipitation and filtered. The cakes would dry only very slowly so the wet cakes were rolled in plastic bags with Portland cement powder or were stirred in one-gallon cans with Portland cement to make them set. In 1981, hydroxide precipitation was discontinued and the neutralized bottoms solutions were stirred directly with Portland cement powder in one-gallon cans. In January 1983, Gypsum cement powder replaced the Portland cement powder. The evaporator bottoms solution was adjusted to a pH of about 3 for Gypsum cement or to a basic pH (7-10) for Portland cement. The cement powder was then mixed into the solution. Any particulate matter was added during the stirring operations.

(calcium sulfate)

also known as Enviro stone cement)

Waste oil/organic solutions set up in cement were restricted to TRU vacuum pump oils and mixtures of trioctyl phosphine oxide (TOPO) and iodine dissolved in kerosene. Some of the miscellaneous solutions sent for cement fixation included analytical chemistry solution residues that contained RCRA-regulated organics or heavy metals. Oils and organic liquids are emulsified by the addition of a surfactant before they are mixed with the neutralized evaporator bottom solutions (TWCP-3568/N-74). The miscellaneous solutions were treated in a manner much like the evaporator bottoms solution.

The discard of impure americium oxide from P/S code AO (section 3.4.6.1) was mostly accomplished by stirring it into a one-gallon can of evaporator bottom cement paste (up to 140 g americium/can). When all cement was being stirred in one-gallon cans, the americium-containing can was placed in the center of the middle layer of cans in a drum to provide maximum shielding. When storage of the impure americium hydroxide cakes in P/S code AO became a radiation exposure problem, a significant portion of the stored material was placed in P/S code IA until the material could be immobilized in cement for disposal. P/S code IA was active from April 1986 to December 1988. It did not involve any type of processing and, therefore, did not generate any waste.

In July 1988, the cementation process was changed from stirring the cement in one-gallon cans to stirring cement monoliths in 55-gallon drums attached to the glovebox (under P/S code CF). Although P/S code HP is still open, it has not been used since July 1988.

NOTE: The strategy proposed for shielding americium-containing cans, after the operation converted to 55-gallon drum monoliths, was to push the one-gallon

The waste generated by this process includes the usual glovebox waste plus metal screens and tools, rags, brushes, and containers.

3.5.6.20 HRA →

3.5.6.2~~0~~1 Impure Americium Holding for Discard (IA)

This P/S code was active from April 1986 to December 1988. When storage of the impure americium hydroxide cakes in P/S code AO became a radiation exposure problem, a significant portion of the stored material was placed in P/S code IA until the material could be fixed in cement for disposal. This P/S code did not involve any type of processing and, therefore, did not generate any waste.

Because this P/S code simply held excess americium hydroxide cakes from P/S code AO, the EPA HWNs applicable to P/S code AO apply to P/S code IA. These EPA HWNs include D006, D007, D008, D009, and D011.

3.5.6.2~~1~~2 Uranium/Plutonium Processing Nitrate Hydrofluoric Dissolution (LC)

This process was active from August 12, 1985 to August 1987. Plutonium oxides from P/S codes US (later renamed US1) and US2 were dissolved in nitric acid and hydrofluoric acid, concentrated by distillation, and filtered. The distillate solution was sent to P/S code EV. Any filter residues were calcined and recycled into the dissolution process. The uranium-plutonium solution was subjected to an oxalate precipitation with oxalic acid or sodium oxalate to precipitate the plutonium. The slurry was filtered and the plutonium oxalate was sent to a calcination process. The uranium nitrate solution was cemented in P/S code HP.

RCRA-regulated organics and metals were not used in this process and were not introduced with the feed materials; therefore there would not be any RCRA-regulated solvents or metals in the waste streams generated by this process. This process generated the usual glovebox waste, plus glassware, heating mantles, plastic filter boats, filter paper, rags, brushes, and metal tools and equipment.

3.5.6.2~~2~~3 Non Combustible Leach (LG1)

This process was active from October 1982 to December 1985. Metal, glass, and plastic from most PF-4 processes were leached with nitric acid to remove plutonium

materials listed in Table 1 that are obtained either from the storage vault, as process output from other P/S codes, or from sources outside TA-55, including other DOE sites. Although Pu is usually the radioactive element of interest in the feed materials, in some cases the feed material consisted of other radioactive elements, as indicated by Table 2.

The remainder of this section summarizes the nature of the process waste in terms of its physical, chemical and radioisotopic characteristics.

3.6.1 Physical Form Identification

Solid waste from nitrate operations primarily consists of metal and debris waste, as well as cemented waste discarded under P/S codes CF or HP. Debris waste contains glassware, plastics, ceramic materials, paper, rags, HEPA filters, metal containers, brushes, and small tools. Lead-containing debris items are segregated and packaged separately (TWCP-3567/N-39). Prior to 1987, leaded gloves were discarded in the combustible and non-combustible debris waste streams. Between 1987 and May 1992, leaded gloves were segreated from combustible debris and discarded in the metal debris waste stream because of concern that explosive lead oxides might form if the combustible debris waste was incinerated. Since May 1992, leaded gloves have been routinely segregated from other metal debris waste and assigned to a separate leaded-glove waste stream.

Because items from several different processes are usually combined into individual waste drums, the physical waste form of each drum must be determined independently. This information is documented on a

Table 1. Process Feed Materials for Nitrate Operations

Feed Materials	Potential Presence of RCRA-Regulated Substances	P/S Codes in Nitrate Operations

Feed Materials	Potential Presence of RCRA-Regulated Substances	P/S Codes in Nitrate Operations
Analytical laboratory solutions	Potentially contaminated with RCRA-regulated constituents • All analytical laboratory solutions are potentially contaminated with chromium (D007), lead (D008), and mercury (D009) • CLS-1 solutions potentially contaminated with mercury (D009) and lead (D008), as well as RCRA-listed organic substances used as solvents, including acetone (F003), butyl alcohol (F003), carbon tetrachloride (D019), chlorobenzene (F002, D021), chloroform (D022), methanol (F003), methylene chloride (F002), tetrachloroethylene (F002, D039), xylene (F003) (Cl-25/TWCP-3547).	CF, HP (if solutions contained Pu >DL)
Anode heels	Typically contaminated with RCRA-regulated heavy metals Cd, Cr, Pb and Ag (D006, D007, D008, D011). Heavy metals As, Hg, and Se are not present because they are volatilized from the Pu oxide feed at the high temperatures to which this material is subjected in P/S codes ER, RM, and SS (electrorefining step).	AS, BU, NC
Ash from P/S codes ETD and TDC; or from other DOE sites such as Hanford	Usually suspect contaminated with Ba, Cd, Cr, Pb, and Ag (D005, D006, D007, D008, D011). As, Hg, and Se may also be present although these metals are volatilized at high temperatures if present in the oxide and chloride forms.	AL, AT, ATL, ED, HGMS, HRA, IS, MPD, PTS, RC, SC
Crucible pieces (tantalum, magnesium oxide)	Typically fairly pure, no RCRA substances present	MAS, SC
Disassembled weapons components	High-purity Pu and U material types, no RCRA substances present	BM, RB, RBJ
Experimental R&D feed materials; various isotopes and isotopic mixtures of actinides in various matrices	Variable purity	MAS
Hydroxide cakes	Typically contaminated with RCRA-regulated heavy metals Cd, Pb, Hg, Ag and possibly Cr (D006, D008, D009, D011, and D007)	CD, HCD, HD, LG2

Feed Materials	Potential Presence of RCRA-Regulated Substances	P/S Codes in Nitrate Operations
Miscellaneous materials contaminated with Pu (e.g. sand, slag, tools, crucibles, metal, glass, plastic, labware, scrap, rags, glovebox sweepings, pump oils, HEPA filters, Hanford [Hanford materials])	Typically contaminated with RCRA-regulated heavy metals Ag, Cd, Hg, Pb and possibly Cr (D006, D008, D009, D011, and D007)	ATL, BAC, CPOD, CR, ED, ETD, GMS, HGMS, IS (combustible material), LG1 (non-combustible material), MAG, MAS, MELL (cellulosic material), ML (metal equipment), NC (non-combustible material), NL (non-combustible material), PA (glovebox sweepings), PAF, RO (organics), SC, SP, TDC (cellulosic material), VC, ZD
MSE salts	Typically fairly pure, suspect contaminated with barium but no other RCRA substances present	MB, PS
Pu metal or metal alloy, Hanford (Hanford materials)	High purity, no RCRA-regulated substances, unless noted otherwise	ATL, BM, BU, HRA, MF, PAF, VP1
Pu oxalates	High purity, no RCRA-regulated substances, unless noted otherwise	CC, DF, HC
Pu oxides, Hanford (Hanford materials)	Variable purity from P/S codes RB, RBJ and others, and from the vault; suspect contaminated with RCRA-regulated heavy metals Cd, Cr and Pb (D006, D007, D008) High purity oxides and material from Hanford from P/S codes CA and MA, and from the vault	ATL, BL, CH, CPOD, DP, ED, FC, HRA, LC, MPD, OD, PT, RB, RBJ, SP, SSD, UPS, US, US2
Pyrochemical salts	Typically fairly pure, no RCRA substances other than Ba are present	COD, COL, MB

Table 2. P/S Codes with Radionuclides Other Than Pu in Feed Materials

P/S code in nitrate operations	Radionuclide in feed material
AO, AP, FA, PR	Am-241
ATL	Np-237
CF	Am-341, U, Th-232
HP, IA, OH, SX	Am-241
LC, RC, UPS, US	U
PT	Th-232

Waste Origination and Disposition Form (WODF) by the waste generator according to controlled procedures. The P/S code for each waste item is also documented on this form. In the packaging process, a standard form, the Discardable Waste Log Sheet (DWLS), was used to list each item number and record its matrix material. This form was signed by the waste packager, reviewed, and approved by quality assurance (QA) personnel. Example forms for one drum of waste generated can be viewed in record TWCP-2513.

3.6.2 Radionuclide Content Identification

The primary plutonium material type inputs for nitrate operations at TA-55 are listed in Table 3. The designation *material type* (MT) (e.g., MT 52) is used within the DOE Complex to describe the isotopic composition of common blends of radioactive materials used within the Complex. The material type notation was developed because it is a convenient way to describe material types that have very consistent isotopic compositions. Please note that Table 3 indicates the isotopic composition of the material types at the time the waste was characterized.

The material type provides the basis for estimating an upper bound for U-234, U-235, and Am-241 contents based on the rate of decay of their precursors, Pu-238, Pu-239 and Pu-241, respectively. These bounding calculations provide a basis for identifying enrichment or depletion of one radionuclide versus another based on radioassays of individual waste containers. The results of these calculations are also tabulated in Table 3, assuming (a) none of these isotopes were initially present in the material, (b) the oldest Pu material in inventory dates back to 1 January 1960, and (c) the waste was packaged on 1 January 1996, making it 36 years old (TWCP-698).

The material type used in the process generating each waste item was documented on the WODF and DWLS. However, some of the plutonium recovery processes separate plutonium and americium, or plutonium and uranium, so that their relative ratios may be altered in the process outputs and wastes. Waste items may be either depleted or ~~enriched in americium~~ depending on whether the source of contamination is the process product or the process residues (TWCP-882). Table 4 indicates some P/S codes in which enrichment of radioelements other than Pu are expected to be greater than usual.

Am-231 or U-234

Residues submitted for reprocessing often contain Np-237, the decay product of Am-241 (half-life, 458 yr). This radioisotope is expected to be present in minor amounts in nearly all debris waste from nitrate operations at TA-55, with exceptions as noted in Tables 2 and 4. In addition,

Pa-231 + Cs-137

Table 3. Average Isotopic Content of Plutonium Material Types and Enrichments

Material Type (MT)	Plutonium Isotope (Weight%) and Half-Life						Upper Bounds for Dimensionless Weight Ratios[a]		
	Pu-238 (87.74 yr)	Pu-239 (24120 yr)	Pu-240 (6564 yr)	Pu-241 (14.35 yr)	Pu-242 (376,300 yr)	Pu-244 (8.26 x 10^7 yr)	U-234/ Total Pu	U-235/ Total Pu	Am-241/ Total Pu
MT 51	0.006	96.77	3.13	0.076	0.018	—	1×10^{-5}	0.001	0.0006
MT 52	0.01	93.78	6	0.2	0.02	—	2×10^{-5}	0.001	0.002
MT 53	0.03	91.08	8.45	0.366	0.071	—	7×10^{-5}	0.0009	0.003
MT 54	0.046	87.42	11.5	0.81	0.22	—	0.0001	0.0009	0.007
MT 55	0.06	83.88	14.73	1.03	0.304	—	0.0002	0.0009	0.009
MT 56	0.061	81.9	16.51	1.18	0.355	—	0.0002	0.0009	0.01
MT 57	0.433	74.63	20.7	2.55	1.69	—	0.001	0.0008	0.02
MT 42									
84%	1.02	1.37	10.32	3.13	84.14	0.02	0.003	1×10^{-5}	0.03
90%	0.72	1.26	6.4	1.86	89.77	—	0.002	1×10^{-5}	0.02
95%	0.45	0.56	2.47	0.906	95.58	0.029	0.001	6×10^{-6}	0.008
MT 83									
83%	83.89	13.8	1.9	0.32	0.09	—	0.26	0.0002	0.003
89%	89.26	10.07	0.633	0.021	0.015	—	0.28	0.0001	0.0002

superscript (a) These ratios are calculated under the assumption that no chemical fractionation occurs and, hence, are intended to be used to identify fractionation when it is present by comparing these upper bounds to radioassay data.

Source: TWCP-698

Table 4. Secondary Radionuclides in Process Wastes

P/S code	Secondary radionuclide in process waste
AO	Am-241 (1979—1984, Am-241 production) Am-241 (1985—1987, impure AmO_2 for disposal)
AP	Am-241 (1979—1984, Am-241 production)
ATL	Np-237 (1993—1994, NDA standards material)
CD, HCD, HD	Am-241 (1992—present)
CF, ED, EV, RB, RFX	Np-237 as decay product in MSE (1992—present)
EV	Am-241 (1979—1984, Am-241 production) Am-241 (1992—present)
FA	Am-241 (1979—1984, Am-241 production)
HP	Am-241 (1979—1984, Am-241 production) Am-241 (1985—1987, impure AmO_2 for disposal) Am-241 (1992—present)
IS	Cm-244 (March 1987—April 1987)
LR, PR	Am-241 (1979—1984, Am-241 production)
PS	Am-241 (1985—1987, impure AmO_2 for disposal)
PT	Th-232 (1980—1985)

LG1	D006, D008
LG2	D006, D007, D008, D009, D011
LR	D006, D007, D008, D009, D011
MB	D007, D008, and D009 (in accordance with discussion in TWCP-AK-2.1-002,R.2, section 3.~~4~~.2)
MELL	D006, D007, D008, D009, D011
ML	D006, D008
MPD	D005, D006, D007, D008, D011
NC	D006, D008
NL	D006, D008
OD	D006, D007, D008
OH	D006, D007, D008, D009, D011
PT	D007
PTS	D005, D006, D007, D008, D011
RC	D005, D006, D007, D008, D011
RO	D006, D008, D040
RR	D006, D007, D008, D009, D011
SC	D005, D006, D007, D008, D011
SP	D007
SSD	D006, D007, D008
TDC	D005, D006, D007, D008, D011
VC	D006, D008
VP1	D009
VP3	D009
VUL	D005, D008

No D001 (ignitable), D002 (corrosive) or D003 (reactive) listings apply to the solid wastes from nitrate operations because no ignitable chemicals were used in these processes and because the solid wastes do not contain any free liquids (see Section ~~6~~.0).
5

5.0 VERIFICATION THAT IGNITABLE, REACTIVE, AND CORROSIVE WASTES WERE EXCLUDED

According to the WIPP WAP, "The prohibition of liquids and containerized gases prevents the shipment of corrosive, ignitable, or reactive wastes." Administrative controls on waste packaging were in place at various times to ensure the absence of such items from the waste stream.

- Liquids were prohibited from solid waste streams at TA-55 when the facility opened in January 1978. A waste management procedure written to cover operations at the new facility, *TA-55 Standard Operating Procedure (SOP) 406-GEN-R00*, stated that "Liquids are not permitted in any container of solid waste materials" (TWCP-3943).

- Chemical Waste Disposal Requests introduced in June 1980 included checkboxes which the waste generator was required to check if the waste contained corrosive acids or bases, or pyrophoric, flammable, corrosive, explosive, toxic, carcinogenic or highly reactive materials.

- The Certification Plan (TWCP-697) and related Generator Attachments (TWCP-701) were implemented in 1987. Waste generators were required to sign a statement on the WODF documenting that the waste contained "no free liquids, pyrophorics, explosives, compressed gases, powders or materials other than the indicated matrix." Checkboxes were also present for indicating the presence or absence of corrosive chemicals. Full implementation of this generator statement occurred in May 1987.

- Waste management inspectors perform visual examination of the waste prior to its initial packaging, thus allowing the inspectors to verify the generator's WODF statement (TWCP-701, Sections 3.8.5 to 3.8.6).

- In addition to the above-mentioned prohibitions on explosives in wastes, explosives were prohibited from TA-55 until installation of the Impact Test Facility in the early 1990s. Explosives continue to be banned in the solid waste streams up to the present time. If a misfire should occur, the requirement is to destroy the unspent powder by burning. (TWCP-4720).

- The Waste Profile Request Form (WPRF), which has been in use at LANL since 1991, includes a statement which must be authenticated by the waste generator, that the waste is not ignitable (flash point >200°F), reactive, or corrosive.

- The TA-55 Generator Attachments to the Certification Plan were updated in 1995 (TWCP-700) but the prohibition on liquids in the waste, and the waste management inspection, remained in effect.

Hence, since the inception of operations at TA-55, corrosive and reactive wastes have been excluded from TA-55 solid wastes through the prohibition of liquids.

The absence of these prohibited items is verified through radiography of each waste container and visual examination of selected containers during TWCP characterization activities. These data will be used to assess the accuracy of AK information in accordance with *Reconciliation of Visual Examination and Radiography Information* (TWCP-QP-1.1-028). Any free liquids are remediated, or the container is tagged as non-compliant by filing a Prohibited Waste Report in accordance with *Nonconformance Reporting and Tracking* (TWCP-QP-1.1-007).

6.0 VERIFICATION THAT INCOMPATIBLE CHEMICALS WERE PROHIBITED

Section ~~6.0~~ 5 summarizes administrative controls in place at TA-55 that prohibit incompatible chemicals in the waste, and measures taken to verify their absence. In addition, all waste containers shipped from TA-55 to TA-54 for storage were evaluated

for potentially incompatible chemicals in accordance with 49 CFR Subpart C—Segregation and separation chart of hazardous materials; Section 177.848, Segregation of hazardous materials, and were determined to be in compliance with this requirement.

7.0 VERIFICATION THAT THERE ARE NO COMPRESSED GASES, FREE LIQUIDS, NONRADIONUCLIDE PYROPHORICS, SEALED CONTAINERS GREATER THAN FOUR LITERS IN VOLUME, OR >1% RADIONUCLIDE PYROPHORICS

Most gases used at the TA-55 Plutonium Facility are stored outside the building and the gas is plumbed into the glovebox from outside the building (TWCP-4164). Occasionally, a lecture bottle may have been used for a process inside the building, but these bottles were kept outside of the glovebox with the gas plumbed into the glovebox. Consequently, compressed gas cylinders or containers are not expected to be in any of the TRU wastes generated by TA-55 operations.

Spray cans, especially WD-40, were in common use in TA-55 gloveboxes until May 1992 (TWCP-4166). These were routinely discarded as metal debris waste. From 1988 until May 1992, the protocol was to vent or puncture the spray cans inside the glovebox; venting was indicated by inserting a metal wire into the valve. After May 1992, spray cans were no longer used in gloveboxes.

For items of pyrochemical salt waste, the procedures of oxygen sparging and/or carbonate oxidation have been used since May 1987 to ensure that pyrophorics were oxidized. In addition, screening tests on similar pyrochemical salts and residues (which contain higher amounts of plutonium) at the Rocky Flats Environmental Technology Site (TWCP-2501) have shown (1) no autoignition, (2) no spontaneous combustion, (3) and no sparking. Experimental results on the reactivity of LANL Direct Oxide Reduction (DOR) salt with water and the reactivity in air of heated calcium metal nodules from DOR salts indicate the absence of "dangerous when wet materials" and pyrophoricity in these salts (TWCP-3730, TWCP-3731, TWCP-3732).

Verification that individual waste drums do not contain compressed gases, free liquids, or sealed containers greater than 4 L in volume is obtained from radiography of each waste containers and visual examination of selected containers during TWCP characterization activities. Any free liquids are remediated, and any sealed containers greater than 4 L in volume, or unpunctured or unvented gas containers, are removed; or else the waste container is tagged as non-compliant by filing a Prohibited Waste Report in accordance with *Nonconformance Reporting and Tracking* (TWCP-QP-1.1-007). For administrative controls on the prohibition of pyrophorics, see Sections ~~6~~ 5.0 and ~~7~~ 6.0.

8.0 VERIFICATION THAT THERE ARE NO POLYCHLORINATED BIPHENYLS (PCBs) IN THE WASTE STREAM

No PCBs were introduced into the nitrate operations, based on documentation in TA-55 procedures reviewed during the AK investigation and summarized in the process inputs

listed in Table 1, Table 5, and Attachment 4. In the cement fixation process (P/S codes CF and HP), oils are sometimes added to drums of cemented waste. There is no indication these oils contain PCBs, and they are added to the 55-gallon drums of cement in small quantities (maximum of 6 liters [TWCP-3568/N-74]). The oils are primarily vacuum pump oils, along with some oils used in heat-treating (cooking or silicone oils) or in grinding (TWCP-3568/N-82). None of these oils are known to contain PCBs. All transformers known to contain PCBs have been tracked from the time of startup of TA-55 in 1978. Whenever any transformer oil is drained, it is handled by a subcontractor who is wholly responsible for its disposal. This oil does not enter the LANL disposal operations.

9.0 CITED PROCEDURES AND REQUIREMENTS DOCUMENTS

- 40 CFR Part 261, Subpart C—Characteristics of hazardous waste, Sections 261.21 (*Characteristic of ignitability*), 261.22 (*Characteristic of corrosivity*), 261.23 (*Characteristic of reactivity*), and 261.24 (*Toxicity characteristic*)
- 40 CFR Part 261—Identification and Listing of Hazardous Wastes
- 40 CFR Part 261, Subpart D—Lists of hazardous waste, Sections 261.31 *(Hazardous wastes from non-specific sources),* 261.32 *(Hazardous wastes from specific sources),* and 261.33 *(Discarded commercial chemical products, off-specification species, container residues, and spill residues thereof)*
- 49 CFR Subpart C—Segregation and separation chart of hazardous materials. Section 177.848, *Segregation of hazardous materials*
- *Acceptable Knowledge Documentation* (TWCP-QP-1.1-021,R.5)
- *Nonconformance Reporting and Tracking* (TWCP-QP-1.1-007)
- *Reconciliation of Visual Examination and Radiography Information* (TWCP-QP-1.1-028)
- *Waste Acceptance Criteria for the Waste Isolation Pilot Plant* (DOE/WIPP-069)
- *Waste Analysis at Facilities that Generate, Treat, Store and Dispose of Hazardous Waste* (EPA/OSWER 9938.4-03)
- Waste Analysis Plan, Attachment B to the *Hazardous Waste Facility Permit Issued to the Waste Isolation Pilot Plant* (EPA No. NM4890139088)
- *Waste Characterization Data Reconciliation with Acceptable Knowledge* (TWCP-DTP-1.2-064)

List is incorrect

ACCEPTABLE KNOWLEDGE ROADMAP

Waste from ~~P/S Codes~~ AL, ~~AT, ATL~~, BM, CD, CF, CPOD, CR, DS, ED, EV, GMS, HCD, HD, IS, LR, MAG, MAS, MELL, ML, ~~MPD~~, NC, OH, OY, PAF, PR, RB, RBJ, ~~RCM~~, RFX, RR, SC, SP, TDC, UPS, VUL

HRA

Copies of these documents are in the TWCP RMDC Center.

TWCP Record No.	Information Category Code*	Information	Source	Summary	Limitations
TWCP-352	B	Description of plutonium recovery processes	Wastes from Plutonium Conversion and Scrap Recovery Operations, LA-11069, March 1988	Document describes the Pu residues and the various treatment approaches used in recovering plutonium from scrap	Document does not give information about RCRA constituents introduced or present in the processes
TWCP-614	D	All TA-55 waste is Defense related.	Memo from Doug Sankey.	All TA-55 waste is Defense related.	Budget information may not be acceptable.
TWCP-697	C	Waste was controlled to meet WIPP WAC requirements as early as 1983.	*Los Alamos TRU Waste Certification Plan for Newly Generated TRU Waste,* WCP-HSE7-CPL-01, R.2 (November 1984)	Waste was controlled to meet WIPP WAC requirements as early as 1983. Generator Attachments were used to describe and reference specific generator procedures.	Overview document - Generator Attachments provide more detailed information.
TWCP-698	B	Gives Material Type compositions	NMT Memo, NMT-7 WM/EC-96-032 Benchmark Environmental Corp. Memo, AL-7193 BEC	Gives Material Type compositions	Does not give information on how material may fractionate in TA-55 waste processes.
TWCP-700	C	*Attachment 3 to the Los Alamos TRU Waste Certification Plan for Newly Generated TRU Waste,* R05	*NMT-7 Attachment, January 1995,* TRUWM-TA55-CPA-03,R00	Documents controls to meet WIPP WAC were implemented and how independent verification was accomplished.	Information is not extremely detailed.
TWCP-701	C	*TA-55 Generator Attachment* to the *TRU Waste Certification Plan for Newly Generated TRU Waste*	*TA-55 Attachment, 1987,* TRU-MST12-CPA-03,R00	Documents controls to meet WIPP WAC were implemented and how independent verification was accomplished.	Information is not extremely detailed.

* Information Category Codes: A = forms intended for use in waste certification, B = data from controlled databases and published documents, C = unpublished data, and D = interviews, memos, and letters

Insert TWCP-4720, 5164 5165

TWCP Record No.	Information Category Code*	Information	Source	Summary	Limitations
TWCP-4166	D	Answers to questions about P/S codes DO, EV, HP, CF, OR, RM, PY	Interview with Jim Foxx, 10/17/00	Answers to questions on use of Cr and Ag, RCRA metals in cement, asbestos in furnaces and gloves, and disposal of spray cans used in gloveboxes.	None
TWCP-4167	D	Answers to questions about segregation of non-defense wastes; leachability of Ag from ash	Interview with Jim Foxx, 10/18/00	Segregation of non-defense wastes began on 27 August 1998; analytical data show that Ag in ash is below limits of regulatory concern	None
TWCP-AK-2.1-002,R.2	A	*Process Acceptable Knowledge Summary Report for Chloride Operations at TA-55*	Generators interview and TWCP AK references	Detailed information on each P/S code for chloride operations at TA-55	None
TWCP-AK-2.1-003,R.2	A	*Process Acceptable Knowledge Summary Report for Metal Operations at TA-55*	Generators interview and TWCP AK references	Detailed information on each P/S code for metal operations at TA-55	None
TWCP-AK-2.1-004,R.2	A	*Process Acceptable Knowledge Summary Report for Miscellaneous Operations at TA-55*	Generators interview and TWCP AK references	Detailed information on each P/S code for miscellaneous operations at TA-55	None
TWCP-AK-2.1-006,R.2	A	*Process Acceptable Knowledge Summary Report for Pyrochemical Operations at TA-55*	Generators interview and TWCP AK references	Detailed information on each P/S code for pyrochemical operations at TA-55	None
TWCP-AK-2.1-007,R.2	A	*Process Acceptable Knowledge Summary Report for Special Processing Operations at TA-55*	Generators interview and TWCP AK references	Detailed information on each P/S code for special processing operations at TA-55	None

* Information Category Codes: A = forms intended for use in waste certification, B = data from controlled databases and published documents, C = unpublished data, and D = interviews, memos, and letters

P/S Code	P/S Title	Process Inputs		Process Outputs		EPA Codes[2]	References
		Feed Stream(s)	Chemicals/Reagents	Product	Waste Stream[1]		
HP	Cement Fixation	Evaporator bottoms Vacuum pump oils Tributylphosphate and iodine in kerosene Analytical chemistry solutions Salts Leached filter paper residues Ash Miscellaneous solutions Americium oxide	Sodium hydroxide Portland cement Gypsum cement Surfactant (polyoxy-ethylene-20-sorbitan)		Cemented waste Leaded gloves	D007, D008, D009, D011, D019, D021, D022, D039, F002, F003	N-81/TWCP-3568
IA	Impure Americium Holding for Discard	Americium hydroxide cakes	None (no processing performed)	Americium hydroxide cake	Leaded gloves	D006, D007, D008, D009, D011	N-81/TWCP-3568
IS	Incinerator	Combustible materials (e.g., rags, paper wipes, wood) (less than 10% plastic and rubber)	Sodium hydroxide solution Potassium hydroxide solution	Scrubber solutions	Ash Scrubber solutions (< DL) Pump seal solutions Leaded gloves	D005, D006, D007, D008, D011	N-5/TWCP-3548
LC	Uranium/ Plutonium Processing	Plutonium oxide	Nitric acid Hydrofluoric acid Oxalic acid Sodium oxalate	Plutonium oxalate	Acidic solutions Uranium nitrate solutions Leaded gloves	D008	N-81/TWCP-3568
LG1	Non Combustible Leach	Debris (metal, glass, plastic)	Nitric acid	Plutonium in nitric acid solutions	Leaded gloves	D006, D008	N-81/TWCP-3568
LG2	Hydroxide Cake Dissolution	Hydroxide cakes	Nitric acid	Plutonium in nitric acid solutions	Leaded gloves	D006, D007, D008, D009, D011	N-81/TWCP-3568

HRA

D015 – AK7

D015
AK-7

INTERIM CHANGE REQUEST

☑ TWCP ☐ WRR ☐ Other If Other, please identify: _____	**IC Number:** 1
Person Requesting this Interim Change: Sandy Wander	
DOCUMENT INFORMATION	
Document Title: Process Acceptable Knowledge Report for Plutonium-238 Operations at TA-55	**Document No./Revision:** TWCP-AK-2.1-009,R.0 (LA-UR-02-1709)
Effective Date of Current Document: 08/07/01	**Document Preparer:** John Musgrave

CHANGE INFORMATION: Please ensure the following changes are made:

Section/Page	Change:	Reason/Justification:
TA-55 Process/ Status (P/S) Code Index / p. vi	Delete "summary" from "NOTE" at top of p. vi and from "*" note at bottom of p. vi Change 3rd column heading on page vi to read "Process AK Report" Delete entire 4th column	Clarification
RCRA Constituents/ EPA Hazardous Waste Numbers / p. viii	Add ASP, C1, WD, and WS to P/S codes in 3rd bullet	Report updated to add P/S codes that were not included. Typo error identified during review.
Global	Change all occurrences of "Sampling Plan" to "AK Information Summary"	Title change
Global	Delete "summary" from "Process AK summary report" and delete "Summary" from "Process Acceptable Knowledge Summary Report"	Clarification
Attach 3 / p. 1	Add "D008" to all timelines	Per SME, all P/S waste codes have potential to have leaded gloves. Timelines updated to reflect information.
	Delete "D006" and "D011" from R8 timeline	Per SME, concentrations below TCLP limits. Data available.
	Create C1 timeline with P/S code D008*,	
	Delete "D005 applies to salt waste" from WS timeline	Per SME, barium used in process was ultra high purity and feed barium was below TCLP limits in salt waste.
	Add the following footnote: "*Prior to 1987, leaded gloves were not segregated from combustible debris. Between 1987 and May 1992, they were segregated and discarded in the metal debris waste stream. Since May 1992, they have been routinely segregated and assigned to a leaded glove waste stream, still under the originating P/S code (TWCP-4166)."	Footnote added to clarify segregation of leaded gloves.

Attach 4 / pp. 1 and 2	In "EPA Codes" column, delete all text and insert "*D008" for rows ASP, GPHS, MTL, P1, R8, RC1, SCP, and WS. Add the following footnote to the table: "*D008 due to leaded gloves"	Updated report to reflect addition of leaded gloves to timelines and all P/S codes per SME. Per SME, Barium used in process was ultra high purity and below TCLP limits in salt waste.
Attach. 6	Add new Attachment 6 and update "Contents" page to reflect addition Add following paragraph to end of Section 2.0: "When discrepancies in AK information are discovered, they are documented and resolved in accordance with *Acceptable Knowledge Documentation* (TWCP-QP-1.1-021). The resulting documentation is found in Decision/Discrepancies Resolution Documentation (Attachment 6)."	New TWCP-QP-1.1-021 requirement

Date changes submitted: 02/12/02		**Desired effective date for changes**:	
INTERIM CHANGE APPROVAL			
Document Preparer: S Wander		Reviewer (if applicable): Facility Rep	
Signature: Sandy Wander	Date: 3/19/02	Signature: Wayne A. Punjak	Date: 3/20/02
Site Project QA Officer: M A Gavett		LAAO (if implementing WAP requirements): NA	
Signature: M A Gavett	Date: 3/21/02	Signature:	Date:
☑ IC Approved ☐ Major Rev. ☐ Hold for next Rev.		Do changes affect WAP data collection, data quality, or performance criteria? ☐ Yes ☑ No If yes, date of CBFO approval: _____ (documentation attached)	
Site Project Mgr/Line Mgr: P Rogers			
Signature: Pamela Rogers	Date: 3/19/02		
USQ Screener (if applicable): NA			
Signature: G M Polley	Date: 3-25-02		
NOTE: Changes can be designated on the document and attached to this form.			
Effective date for this interim change: 03/21/02			

TA-55 PLUTONIUM FACILITY
ACCEPTABLE KNOWLEDGE REPORT

REPORT TITLE: Process Acceptable Knowledge Report for Plutonium-238 Operations at TA-55

REPORT NUMBER: TWCP-AK-2.1-009,R.0 (LA-UR-01-4200)

WASTE GENERATED FROM PROCESS/STATUS CODES: ASP, C1, GPHS, MTL, P1, PP, R8, RCI, SCP, WD, WS

EFFECTIVE DATE: 08/07/01

NEXT REVIEW DATE: 08/07/03

DOCUMENT PREPARER:

John Musgrave	7/3/01
NAME	DATE

APPROVALS:

June Fabryka-Martin	7/3/01
INDEPENDENT TECHNICAL REVIEWER/EDITOR	DATE
Mavis Lin	7/18/01
SITE PROJECT MANAGER	DATE
Betty Humphrey	7/19/01
WASTE CERTIFICATION OFFICIAL	DATE
M A Gavett	7/27/01
SITE PROJECT QA OFFICER	DATE
Andrew J. Montoya	7-3/01
FACILITY REPRESENTATIVE	DATE

© 2001 University of California

HISTORY OF REVISIONS

Revision No.	Date	Pages Revised	Reason for Change
0	08/07/01	—	New report (TWCP-0xxxx)
0/IC1	03/21/02	vi, ix, Att. 3, Att. 4	Respond to audit comments

CONTENTS

Section **Page**

ACRONYMS iv

TA-55 PROCESS STATUS (P/S) CODE INDEX vi

PROCESS ACCEPTABLE KNOWLEDGE SUMMARY vii

1.0 INTRODUCTION 1

2.0 METHODOLOGY USED TO SEARCH FOR AK RECORDS 1

3.0 DESCRIPTION OF THE PROCESS WASTE 2
- 3.1 Facility and Mission 2
- 3.2 Basis, Rationale, and Assumptions Used to Delineate the Waste Streams 3
- 3.3 Waste Physical Form and Content Description 4
- 3.4 Waste Volume and Time Period of Waste Generation 4
- 3.5 Waste Generation Processes 5
- 3.6 Material Inputs to the Waste Generation Processes 16

4.0 ASSIGNMENT OF EPA HAZARDOUS WASTE NUMBERS 19
- 4.1 F, K, and P Listings 19
- 4.2 Toxicity Listings 20

5.0 VERIFICATION THAT IGNITABLE, REACTIVE, AND CORROSIVE WASTES WERE EXCLUDED 21

6.0 VERIFICATION THAT INCOMPATIBLE CHEMICALS WERE PROHIBITED 23

7.0 VERIFICATION THAT THERE ARE NO COMPRESSED GASES, FREE LIQUIDS, NONRADIONUCLIDE PYROPHORICS, SEALED CONTAINERS GREATER THAN FOUR LITERS IN VOLUME, OR >1% RADIONUCLIDE PYROPHORICS 23

8.0 VERIFICATION THAT THERE ARE NO POLYCHLORINATED BIPHENYLS (PCBs) IN THE WASTE STREAM 24

9.0 CITED PROCEDURES AND REQUIREMENTS DOCUMENTS 25

Table
- 1 Process Feed Materials for Pu-238 Operations 16
- 2 Average Isotopic Content of Pu-238 Material Types and Enrichments 18
- 3 Actinide Impurities in $^{238}PuO_2$ Fuel Lots for Cassini Program 19
- 4 Chemical Inputs to Processes Described in This Report 20
- 5 TCLP Concentrations (ppm) in Wastes from Pu-238 Operations 21

Attachments
- 1 Acceptable Knowledge Roadmap (11 pages)
- 2 LANL and TA-55 Site Maps (2 pages)
- 3 Timeline for Pu-238 Operations (2 pages)
- 4 Process Inputs and Outputs (2 pages)
- 5 Simplified Pu-238 Process Flow Diagrams (2 pages)
- 6 Decision/Discrepancies Resolution Documentation (2 pages)

ACRONYMS

AK	acceptable knowledge
AK Information Summary	*Los Alamos National Laboratory Transuranic Waste Characterization Acceptable Knowledge Information Summary* (TWCP-PLAN-0.2.7-001,R.5)
CFR	*Code of Federal Regulations*
CMR	Chemistry and Metallurgy Research [Facility]
D	EPA hazardous waste number prefix for wastes with hazardous characteristics, defined in 40 CFR Subpart C, Sections 261.21 to 261.24
DOE	U.S. Department of Energy
DOR	direct oxide reduction
DWLS	Discardable Waste Log Sheet
EP-60	type of inner shipping container
EPA	U.S. Environmental Protection Agency
F	EPA hazardous waste number prefix for hazardous wastes from non-specific sources, defined in 40 CFR Subpart D, Section 261.31
GPHS	General Purpose Heat Source
HF	hydrofluoric acid
HEPA	high-efficiency particulate air
HNO_3	nitric acid
HWN	[EPA] hazardous waste number
K	EPA hazardous waste number prefix for hazardous wastes from specific sources, defined in 40 CFR Subpart D, Section 261.32
LANL	Los Alamos National Laboratory
LWRHU	Lightweight Radioisotope Heater Unit
M	molar
MASS	Material Accountability and Safeguards System
$MgCl_2$	magnesium chloride
MgO	magnesium oxide
MSDS	material safety data sheet
MT	material type
MWG	Milliwatt Generator
NMT	Nuclear Materials Technology [Division]
P	EPA hazardous waste number prefix for acute hazardous waste defined in 40 CFR Subpart D, Section 261.33
P/S [code]	process/status [code]
PCB	polychorinated biphenyl
PF-4	Plutonium Facility, Building 4
Pu-238	plutonium-238
PuO_2	plutonium oxide
RCRA	Resource Conservation and Recovery Act
RFETS	Rocky Flats Environmental Technology Site
RLWTF	Radioactive Liquid Waste Treatment Facility
RMDC	Records Management/Document Control
SME	subject matter expert

SOP	standard operating procedure
SRS	Savannah River Site
TA	technical area
TCLP	Toxicity Characteristic Leaching Protocol
TRU	transuranic
TWCP	Transuranic Waste Certification/Characterization Project
UCNI	Unclassified Controlled Nuclear Information
UF/PF	ultrafiltration/polymer filtration
WAC	waste acceptance criteria
WIPP WAC	*Waste Acceptance Criteria for the Waste Isolation Pilot Plant* (DOE/WIPP-069)
WIPP WAP	Attachment B, Waste Analysis Plan, to the *Hazardous Waste Facility Permit Issued to the Waste Isolation Pilot Plant* (EPA No. NM4890139088)
WIPP	Waste Isolation Pilot Plant
WODF	Waste Origination and Disposition Form
WPRF	Waste Profile Request Form
μm	micron

TA-55 PROCESS/STATUS (P/S) CODE INDEX

NOTE: This index indicates the main process AK report and report section that covers each P/S code mentioned in this report.

P/S Code	P/S Name	Process AK Report*
ASP	Aqueous Scrap Processing	Plutonium-238 Operations
C1	Pu-238 Heat Source Calorimetry	Plutonium-238 Operations
CA	Casting	Metal Operation Processes
CF	Cement Fixation	Nitrate Operations
ED	Cascade Dissolver	Nitrate Operations
GPHS	General Purpose Heat Source Fabrication	Plutonium-238 Operations
HP	Cement Fixation	Nitrate Operations
ITF/ITF4	Impact Test Facility	Metal Operation Processes
MPD	Cascade Dissolver	Nitrate Operations
MTL	Metallography	Plutonium-238 Operations
OR	Direct Oxide Reduction	Pyrochemical Processes
P1	Routine Pu-238 Heat Source Production	Plutonium-238 Operations
PPD	Plutonium Pellet Dissolution	Special Processing
R8	Routine Pu-238 Solidification	Plutonium-238 Operations
R8	Recovery of Pu-238 from Sucrose Solutions	Plutonium-238 Operations
RCI	Recovery of Pu-238 from Contaminated Iridium	Plutonium-238 Operations
SC	Cascade Dissolver, G437	Nitrate Operations
SCP	Routine Pu-238 Scrap Processing	Plutonium-238 Operations
SP	Scrap Dissolution, G438	Nitrate Operations
TDC	Thermal Decomposition of Cellulose Items	Nitrate Operations
WD	Welding and Decon for GPHS	Plutonium-238 Operations
WM	Waste Management	Miscellaneous Operations
WS	Pu-238 Direct Oxide Reduction	Plutonium-238 Operations

No PP

* Process AK reports: Metal Operation Processes (TWCP-AK-2.1-003), Miscellaneous Operations (TWCP-AK-2.1-004), Nitrate Operations (TWCP-AK-2.1-005), Plutonium-238 Operations (this report), Pyrochemical Processes (TWCP-AK-2.1-006), and Special Processing (TWCP-AK-2.1-007)

PROCESS ACCEPTABLE KNOWLEDGE SUMMARY

Waste-generating process: Plutonium-238 processes

P/S codes: ASP, C1, GPHS, MTL, P1, PP, R8, RCI, SCP, WD, WS

Type of waste generated:

Retrievably stored and newly generated, mixed and non-mixed, combustible and non-combustible debris; mixed oil and vermiculite waste; mixed solidified inorganic process waste including leached solids, salts and metal oxides.

Site: LANL

Facility Mission (including defense and non-defense programs):

TA-55 has extensive capabilities for the extraction and recovery of plutonium from residues and scraps generated from operations at various LANL facilities and other DOE sites in the defense complex. The recovered plutonium is converted into pure plutonium feedstock. These manufacturing and recovery operations, associated maintenance operations, and TA-55 plutonium research are the sources of TRU-contaminated scrap, residues, and debris waste generated at TA-55. The scrap and residues are processed to recover as much plutonium as practicable before disposal. Wastes are generated from plutonium recovery and purification for defense programs. These wastes may have been generated in the same rooms and gloveboxes as were used for non-defense activities, and were not segregated from non-defense waste until August 27, 1998.

Area(s) or building(s) where the process waste was generated (including operations carried out in those areas):

In the 200 Wing of the TA-55 Plutonium Facility (Building PF-4), Rooms 201, 204, 205, 206, and 207 have been used exclusively for Pu-238 processes. Plutonium-238 operations include chemical and radiochemical analysis, process tests and development, plutonium research, and heat source fabrication as well as recovery of Pu-238 from scrap and residues produced by numerous feeds.

Description of the process waste (physical form and typical content description):

Waste from Pu-238 operations consists primarily of debris waste, including cellulose-based waste, plastic-based waste, rubber, metal debris, glass debris, HEPA filters, and steel packaging materials. Other Pu-238 waste includes oil and vermiculite waste and solidified inorganic process waste including leached solids, salts and metal oxides. Liquid waste is sent to the Radioactive Liquid Waste Treatment Facility (RLWTF) at TA-50.

Summary Categories: S3000, S5000

Waste Matrix Codes: S3100, S3200, S5000, S5100, S5410

Description of the waste-generating process:

The overall goal of the Pu-238 processes is to produce heat sources for various applications. Limited recovery of plutonium from metal, metal alloys, scrap, and residues is also part of Pu-238 processing operations.

Process Input:

Plutonium metal and oxides; pyrochemical salts; ash; analytical laboratory solutions; and residues from other DOE facilities.

Radioisotopic content of the waste:

Pu-238 material types with well-defined isotopic compositions. U-234 is often present as a decay product of its plutonium precursor. Less common radionuclides present as trace-level contaminants are Am-241, Am-243, Cs-137, Np-237, Th-232, U-235 and U-238.

RCRA Constituents/EPA Hazardous Waste Numbers:

- D007 (chromium), D008 (lead), and D009 (mercury) apply to waste from P/S code R8.
- D008 (lead) applies to debris waste from all P/S codes from Pu-238 operations for discarded leaded gloves.
- No other D codes apply to waste generated by P/S codes ASP, C1, WD, WS GPHS, MTL, P1, RCI, or SCP.
- No F, K or P codes apply to any of the P/S codes under Pu-238 operations.

Process waste volume (if known):

Waste volumes for each P/S code have not been tracked. Instead, waste items are segregated into similar material types and packaged in waste containers. Waste containers are segregated into waste streams in the AK Information Summary, and waste stream volumes are reported in that document.

Years of generation for the process waste: 1978–present

PROCESS ACCEPTABLE KNOWLEDGE REPORT FOR PLUTONIUM-238 OPERATIONS AT TA-55

1.0 INTRODUCTION

All transuranic (TRU) waste must be sufficiently characterized and certified before it is shipped to the Waste Isolation Pilot Plant (WIPP). The U.S. Environmental Protection Agency (EPA) allows use of acceptable knowledge (AK) for waste characterization. EPA uses the term AK in its guidance document, *Waste Analysis at Facilities that Generate, Treat, Store and Dispose of Hazardous Waste.* Attachment B, Waste Analysis Plan, to the *Hazardous Waste Facility Permit Issued to the Waste Isolation Pilot Plant* (EPA No. NM4890139088) (WIPP WAP) defines AK and provides guidelines on how AK should be obtained and documented.

This process AK report was prepared in accordance with *Acceptable Knowledge Documentation* (TWCP-QP-1.1-021). The primary purpose of this report is to systematically organize, evaluate, and summarize detailed AK information about individual processes that generate TRU waste in the Plutonium Facility at Technical Area (TA) 55, one of the TRU-waste generators at Los Alamos National Laboratory (LANL). By doing so, this report provides detailed technical support for one or more waste stream AK summary reports which include these process wastes, such as the *Acceptable Knowledge Report for Waste Streams TA-55-43, TA-55-44, TA-55-45, TA-55-46 and TA-55-47* (TWCP-AK-2.1-011).

2.0 METHODOLOGY USED TO SEARCH FOR AK RECORDS

The AK search for the information related to TA-55 waste streams resulting from Pu-238 processes and Pu-238 heat source fabrication covered:

- Review of the *Los Alamos National Laboratory Transuranic Waste Characterization Acceptable Knowledge Information Summary* (TWCP-PLAN-0.2.7-001) (AK Information Summary) that includes information regarding all TRU waste streams
- Review of documents related to waste generation and waste management activities at TA-55 as listed on the Acceptable Knowledge Roadmap (Attachment 1)
- Interviews with personnel involved with waste generation and waste management at TA-55 as listed on the Acceptable Knowledge Roadmap (Attachment 1)
- Analyses of individual processes generating waste, and evaluations of the potential for Resource Conservation and Recovery Act (RCRA)-regulated constituents to be present in the process wastes, based on subject matter expert (SME) interviews and any relevant data

NOTE: Much of the AK information related to Pu-238 processes is contained in Transuranic Waste Characterization/Certification Project (TWCP) Record No.

TWCP-3545. Individual documents in this record have been assigned a separate identifier, P238-nn, where nn is a sequential 1- or 2-digit number. This referencing nomenclature is used throughout this report and its attachments.

The TWCP Records Management/Document Control (RMDC) Center contains copies of the documents referenced in this report. Any Unclassified Controlled Nuclear Information (UCNI) is contained in these records, and is not included in this report. Such records are identified as UCNI in the Acceptable Knowledge Roadmap (Attachment 1).

This process AK report contains information on 11 individual processes that have each been assigned a unique identifier called a process status (P/S) code. The search and compilation of AK information was based on P/S code, because that is the greatest level of process detail recorded in waste generation records.

The TA-55 Plutonium Facility tracks waste items both by the process from which they originated and their material content. Waste items are labeled with an item identification code that contains information on the waste material parameter of the item and an embedded P/S code that corresponds to the process that produced the waste item. Waste items are packaged into waste containers based on the material content of the waste, without regard to P/S code. This practice complicates AK tracking because a single waste container can include waste items from several P/S codes. Further complication is introduced because the waste streams for TA-55 have been defined based primarily on the physical form and material content of the waste and only secondarily on the waste generation process through mixed or non-mixed waste stream designations. Hence, any given Pu-238 waste stream could potentially contain items from all of the plutonium Pu-238 processes that were active at TA-55 over the time span of the generation of the waste stream.

Do we want to focus on 238 only

We have attempted to mitigate confusion resulting from these two different ways of categorizing TA-55 waste (by process of generation and P/S code or by material content and waste stream number) by providing separate AK reports for each categorization method (i.e., process AK reports for process areas, and AK summary reports for waste streams). The AK information search was performed based on the processes used at TA-55 and tracked by the P/S codes, and it is summarized in this process AK report.

When discrepancies in AK information are discovered, they are documented and resolved in accordance with *Acceptable Knowledge Documentation* (TWCP-QP-1.1-021). The resulting documentation is found in Decision/Discrepancies Resolution Documentation (Attachment 6).

3.0 DESCRIPTION OF THE PROCESS WASTE

The following sections describe Pu-238 processes, and identify the resulting wastes as well as outputs that are sent to other Pu-238 operations for further processing.

3.1 Facility and Mission

The TA-55 Plutonium Facility (Building PF-4) recovers plutonium from scrap and residues generated throughout the U.S. Department of Energy (DOE) defense complex, and processes it into pure plutonium oxide for conversion to metal and other products. The contaminated scrap and residues, if containing plutonium above the discard limit, are processed to recover as much plutonium as is practical (TWCP-351, TWCP-352). TA-55 has extensive capabilities for the extraction and recovery of plutonium-239 from residues and scraps generated from operations at various LANL facilities and other Department of Energy (DOE) sites and is establishing similar recovery capabilities for Pu-238 (TWCP-3545/P238-01). These recovery operations, associated maintenance operations, manufacturing operations, and plutonium research are the sources of TRU waste generated at TA-55. Detailed information about the TA-55 plutonium recovery processes can be found in *Waste from Plutonium Conversion and Scrap Recovery Operations* (TWCP-352). Information specific to Pu-238 processes is provided in TWCP-415. A full-block flow diagram for plutonium processing and waste management at TA-55 is given in reference TWCP-886.

A LANL site map and a detailed map of the buildings at TA-55, including Building PF-4, are shown in Attachment 2. In the 200 Wing of Building PF-4, Rooms 201, 204, 205, 206, and 207 are used exclusively for Pu-238 processes (TWCP-3545/P238-01). The Pu-238 processes include recovery operations and heat source fabrication processes. The latter processes include fuel fabrication, pellet production, and scrap/process residues processing.

The Pu-238 processing activities were strictly segregated from all other Pu-processing activities at TA-55 because cross-contamination of the materials would adversely affect the quality and usability of the end products (TWCP-1037). The Pu-238 operations consisted of activities supporting both defense and non-defense applications. However, wastes from various processes were not segregated by funding source, waste-generating process, or waste-generating location (e.g., room or glovebox) until recently (August 27, 1998), but rather were segregated and packaged based on waste type (TWCP-887, TWCP-4162, TWCP-4167). Consequently, a single waste container often contains wastes from multiple processes. Some debris waste was also co-mingled with room trash related to these same operations (both defense and non-defense), and was initially boxed as low-level waste. Subsequently, some of these waste boxes were returned for disposal in drums as TRU waste when on-site radioassay results showed them exceeding the low-level waste threshold value (TWCP-816).

3.2 Basis, Rationale, and Assumptions Used to Delineate the Waste Stream(s)

The basis for delineation of TA-55 waste streams was established by the evolving set of LANL and TA-55 waste management plans and site-specific procedures, which date back to the start of operations at the Plutonium Facility in 1978 (TWCP-352, TWCP-697, TWCP-700, TWCP-701, TWCP-3943). The stated

guidance and practice from the beginning, continuing to the present day, has been to handle and package all combustible and noncombustible debris waste in a similar fashion, regardless of the process (i.e., P/S code) of origin. Inspection, collection, documentation and packaging operations of solid, certifiable TRU wastes at TA-55 are conducted in PF-4 by a waste management section or team (TWCP-352, TWCP-700, TWCP-701, TWCP-3943). Wastes from all TRU waste-generating activities at TA-55 are handled and packaged into waste containers by this team based on the material content of the waste, without regard to P/S code. Materials are considered waste only when they have been received and processed by the waste management team.

Assignment of a particular waste container to a waste stream is then made on the basis of waste generator information compiled in the AK Information Summary. Waste generator information is reviewed to identify the types and sources of waste items present in each drum, to evaluate the most appropriate waste summary group, waste matrix code, and potential for the presence of hazardous constituents. In the AK Information Summary, TA-55 wastes have been assigned to waste streams based on the waste segregation schemes used by TA-55:

- By radioisotope content (Pu-238 or Pu-239 material type) (TWCP-934)
- By material matrix (combustible, noncombustible, metal, glass, etc. waste types)
- By hazardous waste status (mixed, non-mixed, or special case waste streams)

3.3 Waste Physical Form and Content Description

Wastes generated by Pu-238 operations include ^{238}Pu-contaminated debris waste, high-efficiency particulate air (HEPA) filters, filter cake, salts, and wastes entered into the cement fixation process or sent to the Radioactive Liquid Waste Treatment Facility (RLWTF) at TA-50. Detailed information regarding the generation process, characterization, and disposal of these wastes is provided in Section 3.5 of this report.

The debris waste includes the following categories:

- Cellulose (e.g., paper, cheesecloth, cellulosic personnel protective equipment)
- Plastic (e.g., gloves, tape)
- Rubber (e.g., tubing, leaded gloves)
- Metal (e.g., wire, tools, process equipment)
- Glass (e.g., labware)
- Filters (HEPA)
- Graphite
- Ceramic
- Calcined hydroxide precipitation cakes
- Pyrochemical salts

3.4 Waste Volume and Time Period of Waste Generation

The period of generation of the Pu-238 wastes is from 1978 until the present. The P/S codes, their time periods of generation, and corresponding EPA HWNs are shown graphically in Attachment 3, Timeline for Pu-238 Operations.

Waste volumes for individual P/S codes are not tracked. Instead, waste items are segregated into similar material types and packaged into containers. Waste containers are assigned to waste streams in the AK Information Summary, and waste stream volumes are reported in that document, and in the associated AK summary reports (e.g., *Acceptable Knowledge Report for Waste Streams TA-55-43, TA-55-44, TA-55-45, TA-55-46 and TA-55-47* [TWCP-AK-2.1-011]).

3.5 Waste Generation Processes

The Pu-238 for all heat source fabrication processes was produced, separated, and purified at the Savannah River Site (SRS). SRS information indicates that no RCRA-listed chemicals were used in the purification process and that the purified Pu-238 contains no RCRA constituents (TWCP-1044). The Pu-238 processes at TA-55 use no organic solvents. Also, the oxide feed materials do not contain any organic solvents. If the oxides did contain organic solvents, the latter would be boiled off or destroyed by the high temperatures used in the fabrication processes.

Pu-238 processing operations involve several different processes. The processes and P/S codes applicable to Pu-238 operations are listed below:

- P/S code ASP Aqueous Scrap Processing
- P/S code C1 Pu-238 Heat Source Calorimetry
- P/S code GPHS General Purpose Heat Source Fabrication
- P/S code MTL Metallography
- P/S code P1 Routine Pu-238 Heat Source Production
- P/S code PP Pellet Production for GPHS
- P/S code PPD Plutonium Pellet Dissolution
- P/S code R8 Pu-238 Sucrose Solutions and Waste Solidification
- P/S code RCI Recovery of $^{238}PuO_2$ (plutonium oxide) from Contaminated Iridium
- P/S code SCP Routine Scrap Processing
- P/S code WD Welding and Decontamination for GPHS
- P/S code WS Pu-238 Direct Oxide Reduction

Each of these processes is described below in detail. Timelines for these processes are shown in Attachment 3. A complete listing of P/S codes for Pu-238

operations, their descriptions, feed materials, and inputs and outputs is found in Attachment 4. Simplified process flow diagrams for Pu-238 operations are found in Attachment 5.

Wastes from P/S code PPD, which involved the dissolution of Pu-238 pellets in Room 209, were packaged with Pu-238 wastes. This P/S code is described in the *Process AK Report for Special Processing* (TWCP-AK-2.1-007). In addition, ash from P/S code TDC was packaged with other Pu-238 wastes when combustible material from Pu-238 processes were ashed under this activity. P/S code TDC is discussed in the *Process AK Report for Nitrate Operations* (TWCP-AK-2.1-005).

3.5.1 Aqueous Scrap Processing (P/S code ASP)

P/S code ASP is a new activity that covers work involved in the purification of solid $^{238}PuO_2$ in a nitric acid stream (TWCP-5600), similar to the recovery activities already established for Pu-239 as part of TA-55 nitrate operations (e.g., P/S codes ED, MPD, SC and SP described in Section 3.5.2 of TWCP-AK-2.1-005,R.2). A flow chart showing the Pu-238 Aqueous Scrap Recovery Process (P/S code ASP) is shown in Attachment 5.

During comminution, the weighed Pu-238 solid is ground to a particle size < 5 μm. After the comminution, all or a portion of the ground material is put into a dissolution vessel.

The ^{238}Pu solid is dissolved in a mixture of refluxing concentrated nitric acid (HNO_3) and hydrofluoric acid (HF) for up to 8 hours. After dissolution is performed, the ^{238}Pu-rich solution is filtered through a 5-μm teflon membrane. The used teflon membrane is stored in a stainless steel can. A portion of the filtrate may be processed through ion exchange, or the entire filtrate may be treated for oxalate precipitation.

Oxalate precipitation involves an acid adjustment of the filtrate to 1-2 M HNO_3, while the solution is continuously stirred using the mechanical stir bar. Urea is added to scavenge nitrite salt that could interfere with further chemical pretreatment. Hydroxylamine nitrate is added to adjust the valence of the plutonium to (III). Oxalic acid is added to form a Pu-oxalate precipitate. The precipitate is filtered, and calcination converts the Pu-238-oxalate to $^{238}PuO_2$ product. The solid product is cooled, weighed, and stored.

The dissolution Pu-238-filtrate destined for ion exchange may undergo an aluminum nitrate treatment. The dissolution Pu-238-filtrate is added to aluminum nitrate dissolved in dilute nitric acid, followed by a filtration step to collect any formed solids. (Typically, the aluminum nitrate treatment is not performed.) The filtrate then undergoes a pretreatment involving urea, sodium nitrite, and ferrous salt prior to ion

exchange. The Pu-rich eluate is collected and undergoes oxalate precipitation as described above. The Pu-lean effluent, which contains impurity metal ions, as well as the aluminum from the aluminum nitrate treatment, is neutralized to pH 10-12 with sodium hydroxide. Under these neutralization conditions, the majority of the impurity ions and Pu-238 (not precipitated as an oxalate precipitate) will precipitate as metal hydroxides.

The hydroxide precipitate is calcined then stored, and the hydroxide filtrate is sampled to determine the radioactivity level. If above the discard limit, the hydroxide filtrates are transferred to the residue solidification process (P/S code R8). In this process, any soluble Pu-238 is recovered with ferric nitrate and sodium hydroxide, and the filtrate resulting from the solidification process is sent to the TA-50 RLWTF through the caustic waste line.

The Pu-238 in the hydroxide filtrates can also be recovered by a ultrafiltration/ polymer filtration (UF/PF) process operated by NMT-11 personnel.

The $^{238}PuO_2$ product is sent to P/S code P1. The hydroxide cakes are stored either in the vault or in the glovebox line under P/S codes MM or ASP.

3.5.2 Heat Source Fabrication (P/S codes GPHS and P1)

Ref SRS info Release

Pu-238 heat sources that are routinely fabricated at TA-55 include the General Purpose Heat Source (GPHS, produced under the P/S code with the same name), Lightweight Radioisotope Heater Unit (LWRHU), and Milliwatt Generator (MWG) Program. The latter two heat sources are produced under P/S code P1. Heat source production involves fuel fabrication, pellet production, and scrap and process residues processing. Each of these is a separate operation, using different materials and generating different types of waste; therefore, they are addressed individually. Debris waste containing lead gloves may be generated by any of these processes. This waste is segregated from non-lead debris waste and disposed as RCRA-regulated TRU waste (TWCP-3545/P238-02).

Fuel Fabrication

The fuel fabrication process occurs in Room 207. The feed material for fuel fabrication is $^{238}PuO_2$ from SRS. The SRS has been directly or indirectly the source of all feed material for fuel fabrication (TWCP-3545/P238-01). The material physically resides in the TA-55 vault or in Pu-238 heat source calorimetry operations (P/S code C1, does not generate TRU waste) before being introduced into the fabrication

process. This material goes through the physical processes of weighing, splitting, ball milling, slugging and screening, and granule seasoning. The material also undergoes oxygen isotopic exchange, in which oxygen-17 and oxygen-18 are replaced by oxygen-16 as the material is heated to 775 °C. In GPHS and LWRHU processing, oxygen exchange is followed by heating to 1000 °C to release alpha-decay helium from the PuO_2 crystal structure. GPHS and LWRHU season a portion of the granules at 1600 °C and a second portion at 1100 °C. The latter two processes ultimately hot press the pellets at 1530 °C and later heat treat the pellets at 1000 °C and finally at 1527 °C. By contrast, the MWG processing scheme seasons all the granules at 1600 °C, then mixes the PuO_2 with powdered yttrium metal and heats it at 1350 °C to form a sub-stoichiometric plutonium oxide. In all cases, the high temperatures ensure that any organic material that might have been present in the initial feedstock would not carry through to the final product.

No RCRA-regulated solvents or metals are introduced to the process, and all waste generated from the fuel fabrication process is nonmixed waste. The residues and products from this process feed into other Pu-238 processing operations (e.g., pellet production and scrap and process residues processing). (TWCP-3545/P238-03)

During the fuel fabrication process, analytical samples are frequently required for both $^{238}PuO_2$ feed material and product specimens either to characterize the material or to determine whether the material meets current production specifications (TWCP-3545/P238-04). The sampling occurs in Room 207. The sampling points are identified in the P1 Fuel Fabrication flow diagram (TWCP-3545/P238-03). All spatulas are stainless steel and the containers used to transfer or store the samples are stainless steel, tantalum, or glass. The primary capsule is cleaned in an ultrasonic cleaner with ethanol and allowed to air-dry (TWCP-3545/P238-04). This spent ethanol is not TRU waste. Sampling tools are wiped down with cheesecloth containing ethanol, resulting in cloth contaminated with ethanol and possibly a small amount of Pu-238 (TWCP-3545/P238-05). However, the ethanol on the cheesecloth would have been used up in the wipe-down process (TWCP-3545/P238-01). Thus, TRU waste generated from sampling operations includes Pu-238-contaminated debris consisting of cheesecloth (ethanol would have been used up in the process), stainless steel spatulas and containers, glass and tantalum capsules, and plastic secondary capsules.

A sample from the fuel fabrication process is taken to perform particle size analysis on $^{238}PuO_2$. This analysis is conducted in Rooms 201 and 206. Ethylene glycol is used to suspend the $^{238}PuO_2$ powder. Cleaning solutions containing water, soap, and Fantastik are used to clean the external surfaces of the sample cuvettes. These are the only chemicals

used in this analytical process and do not constitute RCRA-regulated waste. (TWCP-3545/P238-06)

The sample is placed into a disposable polystyrene cuvette containing a magnetic stir bar and 2 milliliters (mL) ethylene glycol. The cuvette is sealed with a polystyrene cap coated with Duco cement. After the glue has set, the cuvette is ultrasonically cleaned in a water bath containing a high-purity soap (e.g., Alconox), is cleaned a second time in a bath of distilled water, and is wiped down with a cheesecloth pad soaked in Fantastik cleaning solution. The cuvette is then transferred to another hood for final decontamination with Fantastik-soaked cheesecloth (TWCP-3545/P238-06). This process of cleaning and transferring the cuvette occurred up to 1994. From early 1994 onward, the water bath does not contain soap and Fantastik is not used because all work is performed in the same glovebox line and there is no need to decontaminate the cuvette. Before 1994, if the water was radioactively contaminated, it was discarded to the RLWTF. From 1994 onward, the water has been evaporated. (TWCP-3545/P238-20)

Upon completion of the analysis, the ethylene glycol containing the $^{238}PuO_2$ is poured through a coarse sieve and collected in a polyethylene bottle. When 200 - 500 mL of ethylene glycol has accumulated in the bottle, the contents are poured through a filter. The residue and filter paper are allowed to dry and are sent to a plutonium recovery process. The contaminated ethylene glycol is collected until a sufficient amount is available to discard, and then it is poured onto a bed of vermiculite for absorption. The resulting waste is nonmixed, solid TRU waste. The magnetic stir bars and cuvette caps are reused. The debris waste generated by this process would include ^{238}Pu-contaminated cheesecloth, polystyrene cuvettes, polyethylene bottles, and routine laboratory trash. (TWCP-3545/P238-06)

Pellet Production

The feed material for the pellet production process consists of $^{238}PuO_2$ from fuel fabrication. This material undergoes the physical processes of screening and weighing, die loading, hot pressing, sintering, and dimensioning. The product is sent to the vault and any residues are sent to the scrap and process residues processing operation. No solvents or metals are introduced in this process; therefore, any waste generated is nonmixed TRU debris waste. (TWCP-3545/P238-07)

Decontamination

A solution of nitric and hydrofluoric acid is used for decontaminating the fuel clads. The clad heat sources are immersed in the solution a minimum of three times to allow the acids to dissolve any PuO_2 particles

on the clad surface. Each time, the heat sources are removed from the acid solution and placed on a rag dampened with water. A rubbing action removes contamination while the heat of the source causes the acid solution and water on the rag to evaporate at a fairly rapid rate. The TRU acid solutions generated by the decontamination steps are neutralized to precipitate plutonium, and the filtrate is discarded into the caustic waste line to the RLWTF at TA-50. The plutonium precipitate is discarded if they meet the DL. The only other process chemical, UCAR C-34, is an epoxy for sealing the graphite aeroshell of the LWRHU heat source assembly. The epoxy is not RCRA-regulated (TWCP-1027).

Scrap and Process Residues Processing

The scrap and process residues processing operation receives materials from the vault and various other processes, such as fuel fabrication, pellet production, calorimetry, and metallography. This is a physical process consisting of weighing, sorting, segregating, and loading into a shipping container. The product from this process either goes to the vault or feeds into calorimetry operations (P/S code C1, which does not generate any TRU waste). No solvents or metals are introduced into this process. Therefore, the waste generated is nonmixed TRU debris contaminated with ^{238}Pu. (TWCP-3545/P238-08)

3.5.3 Metallography (P/S code MTL)

The metallography process in Room 201 began in 1992 and is still active. It receives feed material from P/S code P1 processes in the form of $^{238}PuO_2$ fuel recovered from encapsulated heat sources, impacted heat sources, fuel pellets, or other sources. The metallography process is a physical process involving cutting, mounting, grinding, polishing, photography, and etching (TWCP-3545/P238-09). No oils are used in any of these operations. Although chemicals are used to mount and etch the $^{238}PuO_2$, this process only generates ^{238}Pu-contaminated debris waste (TWCP-3545/P238-10).

An epoxy-based mounting resin, hardener, and mount filler is used to mount the $^{238}PuO_2$ (TWCP-3545/P238-10). The epoxy resin, hardener, and mount filler consist of diethylenetriamine, Epon® Resin 8132, and a citofix/durofix liquid. Epon® Resin 8132 is a liquid that polymerizes when mixed with an amine (e.g., diethylenetriamine). The citofix/durofix liquid is also a polymer. These chemicals harden (polymerize) upon use and are not a hazardous waste. (TWCP-3545/P238-20)

One end of a phenolic ring is covered with aluminum tape. The $^{238}PuO_2$ sample is placed in the center of the interior surface of the tape. The mixture of epoxy resin, hardener, and filler is poured into the mount

ring. The mounted sample is placed in a small aluminum film can, which is placed in a pressure bomb. The bomb is pressurized for a minimum of 10 hours, then vented, and the sample is removed. The mounted $^{238}PuO_2$ sample then undergoes grinding and polishing. (TWCP-3545/P238-10)

Manual grinding and polishing involves moving the mounted sample across wet silicon carbide grinding papers of varying grits that are laid over a glass plate. Between each grinding step and after the last grinding step, the sample is ultrasonically cleaned in distilled water. The mounted sample is polished using aqueous suspensions of aluminum oxide or diamond. After polishing, the sample is cleaned in distilled water. Automated grinding and polishing involves using programmable equipment. The grinding process uses a metal or cloth platen that has been coated with an abrasive slurry. This process also involves cleaning the polished sample in distilled water. (TWCP-3545/P238-10)

Whenever there is a requirement to examine and/or document the $^{238}PuO_2$ grain boundaries, the surface of the polished sample is etched using a solution consisting of 93% hydrobromic acid, 5% hydrochloric acid, and 2% hydrofluoric acid. The etching solution is made up on an as-needed basis and only in quantities less than 100 mL. The etching solution applied to the sample surface readily dries and must be replenished; therefore, there will not be any excess etching solution contaminated with ^{238}Pu that would be considered waste. Upon completion of etching, the sample is rinsed with distilled water and allowed to dry. (TWCP-3545/P238-10)

Residues from the metallography process feed into the P/S code P1 process. Before 1994, the $^{238}PuO_2$ was physically removed from the plastic mount (no solvent or chemical was used), and the mount was bagged out with other plastic debris. The $^{238}PuO_2$ sample removed from the mount is sent to the P1 scrap and process residue processing operation for plutonium recovery (TWCP-3545/P238-09). However, since 1994, the $^{238}PuO_2$ has been left on the mount and archived (stored) in the glovebox line. (TWCP-3545/P238-20)

The waste generated from the metallography process includes aluminum tape, grinding papers and polishing cloths, aqueous abrasive slurries, acid etching solutions, and aqueous washing and cleaning solutions. All of these wastes are nonmixed, ^{238}Pu-contaminated wastes. The grinding papers and polishing cloths are dried and discarded as debris waste, as is the aluminum tape. The aqueous abrasive slurries, which are not RCRA-regulated, are feed material for the ^{238}Pu waste solidification process (P/S code R8). Any etching solution remaining on the $^{238}PuO_2$ sample is rinsed off using distilled water and is collected with the aqueous wash solutions. These solutions, which are not RCRA-regulated, are also sent

to the waste solidification process (P/S code R8). Any excess etching solution, which is a corrosive liquid, would not be contaminated with ^{238}Pu and, therefore, is not TRU waste. (TWCP-3545/P238-10)

The metallography process may generate debris waste containing lead (e.g., gloves). This waste is segregated from non-lead debris waste and discarded as RCRA-regulated TRU waste (TWCP-3545/P238-02).

3.5.4 Routine Scrap Processing (P/S code SCP)

The scrap processing operation, which occurred from 1988 to 1996, received its feed material ($^{238}PuO_2$) from calorimetry operations (P/S code C1), heat source operations (P/S codes P1 and GPHS), and the vault. The feed material did not contain any hazardous constituents. The scrap processing operation took place in Room 204, and was a physical process that involved opening, weighing, sorting, and segregating the $^{238}PuO_2$ that arrived in a stainless steel inner shipping container (EP-60). The $^{238}PuO_2$ was then transferred into an outer shipping container (EP-61) and sent to the calorimetry process, and then to the vault. (TWCP-3545/P238-11)

No solvents or metals were introduced into the process; therefore, the only waste generated is solid debris waste (TWCP-3545/P238-12). Any debris waste containing lead (e.g., gloves) was segregated from non-lead debris waste and discarded as RCRA-regulated TRU waste (TWCP-3545/P238-02). The types of materials in the debris waste include cheesecloth pads and metal tools and equipment (TWCP-3545/P238-12).

3.5.5 Recovery of $^{238}PuO_2$ from Contaminated Iridium (P/S code RCI)

The process of recovering $^{238}PuO_2$ from contaminated iridium occurred from 1990 to 1992 in Room 201 (TWCP-3545/P238-13). The feed material for this process came from metal items in the iridium inventory in Building PF-4 or in the Chemistry and Metallurgy Research (CMR) Facility at TA-3. This process used both molten magnesium chloride ($MgCl_2$) and electrochemical dissolution to remove ^{238}Pu from iridium. (TWCP-3545/P238-14)

The first step in this process involved immersing the $^{238}PuO_2$-contaminated iridium metal in molten $MgCl_2$. The $MgCl_2$ was placed into a magnesium oxide (MgO) crucible and heated above its melting point. The same salt was used for subsequent runs until it had lost its effectiveness. The iridium shells were placed into a tantalum basket and immersed in the molten $MgCl_2$. At the end of the treatment, the iridium metal was removed from the molten $MgCl_2$, and the salt coating on the metal was removed with a water wash. This water wash was sent to the ^{238}Pu solidification process (P/S code R8) (TWCP-3545/P238-20). The

expended $MgCl_2$ and MgO crucible were bagged out and assayed before being discarded as ^{238}Pu-contaminated TRU solid waste. The iridium metal was sent to the vault unless additional treatment was necessary. If further treatment was required, the iridium metal underwent electrochemical dissolution. (TWCP-3545/P238-13)

The electrolyte solution consisted of a dilute mineral acid (nitric acid, hydrochloric acid, or sulfuric acid [TWCP-3545/P238-21]) with optional salt. The iridium metal was immersed in the solution, and a current was passed between the iridium metal and a reference electrode (composed of graphite [TWCP-3545/P238-21]). At the end of the run, the iridium metal was washed with water and allowed to dry. The clean iridium metal was sent to the vault (TWCP-3545/P238-15). No solvents or toxic metals were introduced into this process (TWCP-3545/P238-21).

The waste generated from the recovery process includes solid TRU debris waste, such as $MgCl_2$ salt, MgO crucibles, tantalum and stainless steel cans, and routine laboratory trash. Any debris waste containing lead (e.g., gloves) was segregated from non-lead debris waste and discarded as RCRA-regulated TRU waste (TWCP-3545/P238-02). The spent electrolyte solution, which was acidic and contaminated with small amounts of iridium and ^{238}Pu, and the water wash were sent to the ^{238}Pu solidification process (P/S code R8) (TWCP-3545/P238-20).

3.5.6 Routine ^{238}Pu Waste Solidification (P/S code R8)

The process of solidifying ^{238}Pu in waste solutions has been conducted since 1978 in Room 206 and is still active. The feed material for this process comes from analytical operations (LANL groups CHM-1 and CLS-1), ^{238}Pu heat source fabrication operations, metallography operations, and ^{238}Pu decontamination operations (TWCP-3545/P238-16, 17, 18). The feed solutions are strongly acidic, contain heavy metals (TWCP-3545/P238-18), and have ^{238}Pu concentrations orders of magnitude above the discard limit for radioactive waste solutions. The solidification process uses sodium hydroxide, ferric nitrate [$Fe(NO_3)_3 \cdot 9H_2O$], and phenolphthalein (1%) in ethanol to precipitate the ^{238}Pu. (TWCP-3545/P238-16)

Ferric nitrate solids are dissolved into the feed solutions to act as a flocculant. Concentrated sodium hydroxide solution is then added to convert the acidic solutions into basic (caustic) solutions, and cause the ferric ions and the ^{238}Pu ions in the solutions to co-precipitate as hydroxides. The phenolphthalein solution is used to indicate when the solution is basic. After sedimentation and vacuum filtration, the liquid portion (filtrate) is sampled and alpha-assayed to determine the residual ^{238}Pu concentration. The sludge is heated (calcined), such that the hydroxides are converted into oxides for disposal. This procedure is

repeated as necessary for the filtrate until the ^{238}Pu concentration in the filtrate is below the discard limit. (TWCP-3545/P238-16)

The waste generated by this process consists of calcined ferric oxide solids containing ^{238}Pu, a caustic solution containing ^{238}Pu below the discard limit, and solid debris. The oxide solids are sent to the vault or disposed as waste, depending on the ^{238}Pu concentration. The caustic solution is discarded into the caustic drain to the pretreatment plant at the RLWTF (TA-50, Building 1, Room 60). The solid debris waste consists of glassware, teflon, ceramic, stainless steel, tygon tubing, plastic, and paper.

The only potential sources of RCRA-regulated constituents in this process are the analytical solutions received as feed materials from LANL groups CHM-1, CLS-1, and other analytical chemistry groups. Nine ^{238}Pu solutions were stored in the vault at the time that this process was performed but none of these contained RCRA-regulated constituents, according to the coding remarks on the Material Accountability and Safeguards System (MASS) printouts. This absence of RCRA-regulated materials is consistent with the Waste Profile Request Form (WPRF) under which the solutions were received from LANL Groups CHM-1 and CLS-1. The WPRF was generated on 04/27/92 by T.K. Marshall and identifies corrosive acids and radioisotopes as being the only hazardous constituents in the solutions. No organic constituents were noted on the WPRF for these solutions. (TWCP-3545/P238-01)

The analytical techniques for ^{238}Pu solutions do not require the introduction of organic solvents or heavy metals into the solutions. In addition, the ^{238}Pu solutions returning from analytical chemistry are analyzed for heavy metals (totals) in a random fashion along with routine analyses for pH (or acid concentration) and radioactivity. Thus, between 1992 and 1997, 68 analyses were performed on 49 solutions returning from Group CLS-1, as follows: arsenic (4 analyses), barium (3), cadmium (4), chromium (24), lead (3), mercury (6), selenium (5), and silver (19). None of the analytical results for total metals (adjusted for the 20:1 dilution factor in accordance with Toxicity Characteristic Leaching Protocol [TCLP]) exceeded the RCRA regulatory level for the toxicity characteristic for the metals. Two of the results for mercury were inconclusive due to insufficient sensitivity in the analysis. (TWCP-3545/P238-01, 18)

The hydroxide ferroflocculation process conceivably could concentrate the heavy metals from the analytical solutions sufficiently to put them above the regulatory level for toxicity in the hydroxide cakes. Based on the concentration of metals in the feed waste stream (CLS-1 solutions)

and the chemistry involved in the solidification process, arsenic, barium, some chromium, and selenium will remain in the filtrate. Cadmium, lead, mercury, and silver will precipitate with the hydroxide cakes and will remain in the cakes during the calcination process. Since May 1991, the filtrate from this process has been analyzed for metals and all results have been below the RCRA regulatory limits.

Recent analytical information on Pu-238 hydroxide cakes that were calcined indicate that neither silver nor cadmium are present in concentrations large enough to be of concern. This is based on the fact that the primary source of these elements is as impurities in the plutonium oxide as supplied by SRS. Based on historical and present DLs for Pu-238 waste streams, if the Pu-238 concentrations are low enough to meet the DLs, silver and cadmium concentrations will readily occur at less than the TCLP limits for hazardous materials. Thus only chromium, lead, and mercury are present in concentrations in the calcined cake to require the use of the corresponding HWNs.

In addition, a review of nondestructive analysis results on hydroxide cakes revealed that the highest plutonium concentration in a set of calcined cakes was 7.4 weight percent Pu. Because the heavy metal contaminants are concentrated in the course of performing the hydroxide precipitation, contamination of other waste matices by the hydroxide cake is the most likely souce of RCRA levels of of the heavy metals in those waste streams. If the Pu content of the hydroxide cake is 7.4 weight percent and the maximum Pu allowed in a waste matrix other than hydroxide cake is 18.6 grams of Pu per kilogram of combustibles, then

The solid debris waste generated from this process is disposed as TRU solid, non-mixed waste. Any debris waste containing lead (e.g., leaded gloves) would have been discarded as mixed TRU waste to which EPA HWN D008 would be applicable (TWCP-3545/P238-02).

3.5.7 Recovery of ^{238}Pu from Sucrose Solutions (P/S code R8)

The recovery of ^{238}Pu from sucrose solutions, which occurred from 1978 to 1988, was performed in Room 206. The feed material for this process consisted of a 35% sucrose solution composed of sodium pyrophosphate, water, and sucrose. Sucrose solutions were used as a dispersive medium in particle size analysis of $^{238}PuO_2$; therefore, the feed solutions contained $^{238}PuO_2$. (TWCP-3545/P238-19)

The ^{238}Pu was recovered from these sucrose suspensions by filtering out the $^{238}PuO_2$ in a ceramic filter boat and evaporating the solution to dryness over low heat. The $^{238}PuO_2$ residue was scraped off the filter paper and calcined, then sent off-site for reprocessing. The residue from the evaporated solution was calcined and sent for discard if the ^{238}Pu

content was below the discard limit. If the residue was not discardable, it was sent to another location. (TWCP-3545/P238-19)

This recovery operation was a physical process. No solvents were introduced during the process or with the feed material. The wastes generated from this process consist of a calcined residue of sucrose and solid debris waste. The debris waste may contain stainless steel, ceramic, glassware, tygon tubing, and filter paper. All of the waste generated is solid TRU waste. Any laboratory debris waste containing lead (e.g., gloves) is segregated from non-lead debris waste and is discarded as RCRA-regulated TRU waste (TWCP-3545/P238-02).

3.5.8 Pu-238 Direct Oxide Reduction (P/S code WS)

P/S code WS was an activity that was performed in October 1998 and October 1999 (TWCP-5707). There are no current plans to perform this operation again but the code is still active. P/S code WS is a single cycle process that uses Direct Oxide Reduction (DOR) (described for P/S code OR in TWCP-AK-2.1-006,R.2). In this process, PuO_2 and calcium metal are reacted in molten calcium chloride ($CaCl_2$) to produce plutonium metal. The reaction is conducted in a magnesium oxide (MgO) crucible at 820°C to 875°C. Any arsenic, mercury or selenium present in the impure plutonium oxide would be driven off due to their volatility at this high temperature (TWCP-1258). The reaction proceeds to completion when excess calcium is present and when sufficient $CaCl_2$ is available to dissolve the calcium oxide (CaO) product.

After cooling, a plutonium metal button is removed by breaking the crucible. A layer of salt above the button contains unreacted oxide. All DOR salts are exposed to air to oxidize any pyrophoric metals that might be present. The salt is then either routed through aqueous recovery operations (P/S code ASP) to recover the plutonium, or else discarded as waste along with the remaining calcium metal, which has been converted to calcium oxide, and MgO crucible pieces.

3.6 Material Inputs to the Waste Generation Process

Attachment 4 lists P/S codes for Pu-238 operations at TA-55, including process descriptions, feed material, other process inputs, process outputs, and type of waste. The feed materials for Pu-238 operations consist of the general types of materials listed in Table 1 that are obtained either from the storage vault, as process output from other P/S codes, or from sources outside TA-55, including other DOE sites. The remainder of this section summarizes the nature of the process waste in terms of its physical, chemical and radioisotopic characteristics.

Table 1. Process Feed Materials for Pu-238 Operations

Feed Material	RCRA-Regulated Substances	P/S Codes in Pu-238 Operations
Analytical laboratory solutions	Potentially contaminated with RCRA-regulated heavy metals: chromium (D007), lead (D008), and mercury (D009	R8
Scrap oxide	Variable purity, no RCRA substances present	ASP
Iridium metal	Typically fairly pure, no RCRA substances present	RCI
Pu oxalates and hydroxides	Typically fairly pure, no RCRA substances present	ASP
Pu oxide	Incoming Pu-238 oxide from SRS exceeds regulatory limits for chromium (D007) and may exceed limits for cadmium (D006), lead D008) and silver (D011) for some fuel lots (TWCP-1025, TWCP-1026, TWCP-1030). However, calculations documented in TWCP-AK-2.1-011 support the conclusion that the levels of these metals in TA-55 waste streams from Pu-238 operations are below RCRA's regulatory limits.	ASP, GPHS, MTL, P1, SCP
Plutonium oxide	Typically fairly pure, no RCRA substances present	WS

3.6.1 Physical Waste Form Identification

Solid waste from Pu-238 operations primarily consists of debris waste and ferric oxide (derived from calcination of ferric hydroxide precipitates). Debris waste contains glassware, plastics, ceramic materials, cellulose-based personal protective equipment, paper, rags, HEPA filters, metal containers, brushes, and small tools. Leaded gloves may also be generated as process waste. Prior to May 1992, leaded gloves were discarded as metal debris and were not segregated from other metal wastes. Since that time, they have been routinely segregated from other metal debris waste and assigned EPA HWN D008. The ferric oxide is sent to the vault or discarded, depending on its ^{238}Pu content. In addition, caustic solutions from ferric hydroxide precipitation are discarded through the waste line to the RLWTF at TA-50.

Because items from several different processes are usually combined into individual waste drums, the physical waste form of each drum must be determined independently. This information is documented on a Waste Origination and Disposition Form (WODF) by the waste generator according to controlled procedures. The P/S code for each waste item is also documented on this form. In the packaging process, a standard form, the Discardable Waste Log Sheet (DWLS), was used to list each item identification number and record its matrix material. This form was signed by the waste packager, reviewed, and approved by quality assurance personnel.

3.6.2 Radionuclide Content Identification

The primary plutonium material type inputs for Pu-238 operations at TA-55 are listed in Table 2. The designation *material type* (MT) (e.g., MT 52) is used within the DOE Complex to describe the isotopic composition of common blends of radioactive materials used within the Complex. The material type notation was developed because it is a convenient way to describe material types that have very consistent isotopic compositions. Table 2 indicates the isotopic composition of the material types at the time the waste was characterized.

The material type provides the basis for estimating an upper bound for U-234, U-235, and Am-241 contents based on the rate of decay of their precursors, Pu-238, Pu-239 and Pu-241, respectively. The results of these calculations are also tabulated in Table 2, assuming (a) none of these isotopes were initially present in the material, (b) the oldest Pu material in inventory dates back to 1 January 1960, and (c) the waste was packaged on 1 January 1996, making it 36 years old (TWCP-698).

Table 2. Average Isotopic Content of Pu-238 Material Types and Enrichments

Material Type (MT)	Plutonium isotope and half-life (Weight %)						Upper limits for weight ratios		
	Pu-238 (87.74 yr)	Pu-239 (24120 yr)	Pu-240 (6564 yr)	Pu-241 (14.35 yr)	Pu-242 (376,300 yr)	Pu-244 (8.26 x 10^7 yr)	U-234/ Total Pu	U-235/ Total Pu	Am-241/ Total Pu
MT 83									
83%	83.89	13.8	1.9	0.32	0.09	—	0.26	0.0002	0.003
89%	89.26	10.07	0.633	0.021	0.015	—	0.28	0.0001	0.0002

Source: TWCP-698

The material type used in the process generating each waste item was documented on the WODF and DWLS. However, some of the plutonium recovery processes separate plutonium and americium, or plutonium and uranium, so that their relative ratios may be altered in the process outputs and wastes. Waste items may be either depleted or enriched in americium depending on whether the source of contamination is the process product or the process residues (TWCP-882).

Residues submitted for reprocessing often contain Np-237, the decay product of Am-241 (half-life, 458 yr). This radioisotope is expected to be present in minor amounts in nearly all debris waste from Pu-238 operations at TA-55.

In general, uranium and its isotopes are expected to be present only at trace levels, if at all. U-234 is expected to be the most common uranium isotope in MT 83 waste because it is the decay product of Pu-238 (half-life, 87.74 years). After 20 years, 14.6 percent of the initial Pu-238 would have decayed to U-234. For MT 83 with an initial content of 83.89 percent Pu-238, the atomic ratio U-234 to total Pu would be about 0.14U-238 would only be present if purposefully added to the feed material. U-235 ingrowth from the decay of Pu-239 (half-life, 24,120 years) would be negligible due to the long half-life of Pu-239. No U-236 is present.

Less common radionuclides present as trace-level contaminants in TA-55 plutonium operations, including the Pu-238 operations, are Am-241, Am-243, Cs-137, Np-237, Th-232, U-235, and U-238.

Table 3 lists analyses of actinide impurities in several $^{238}PuO_2$ fuel lots as received from SRS for LWRHU production. For the actinides measured, the total concentrations of actinide impurities in the sampled fuel lots are less than 5000 ppm, or 0.5 weight percent.

Table 3. Actinide Impurities in $^{238}PuO_2$ Fuel Lots for Cassini Program

Isotope	Concentration in LANL Fuel Lot (μg/g Pu)				
	272	*274*	*275*	*285*	*286*
^{232}Th	1700	1800	2300	2190	1845
^{234}U	300	190	1070	720	615
^{236}Pu	<1	<1	<1	<1	<1
^{237}Np	1030	1060	1460	1500	1545
^{241}Am	46	49	71	29	36
Total	3076	3099	4901	4439	4041

Source: TWCP-1030

During TWCP characterization, the contents of each waste package undergo non-destructive analysis to provide detailed radioisotopic data. These data will be used to evaluate the accuracy of AK information in accordance with *Waste Characterization Data Reconciliation with Acceptable Knowledge* (TWCP-DTP-1.2-064). The AK report for Pu-238 waste streams will be updated to incorporate the results of these comparisons.

3.6.3 Chemical Content Identification

Chemical inputs to Pu-238 operation processes are listed in Table 4. The use of strong acids, bases, or oxidizers does not result in RCRA listings for solid wastes from these processes because of the absence of free liquids in this waste.

4.0 ASSIGNMENT OF EPA HAZARDOUS WASTE NUMBERS

EPA HWN assignments to process wastes from Pu-238 operations are summarized below, as well as on the process timelines in Attachment 3, and in the table of process inputs and outputs in Attachment 4. These assignments take into account the possible presence of RCRA-listed chemicals in process waste as a result of their suspected or known presence in feed materials, chemical inputs, equipment, and glovebox surfaces.

4.1 F, K, and P Listings

RCRA-regulated F-listed, K-listed and P-listed materials are not present in the feed materials and are not introduced as a part of Pu-238 operations. Therefore, no F-listed, K-listed or P-listed constituents are present in solid waste generated by Pu-238 operations.

Table 4. Chemical Inputs to Processes Described in This Report

Chemical Input	Comments on Applicability of RCRA Listing
Gas	No RCRA-regulated gases are used
Argon gas	
Acids	
Hydrobromic acid	D002 (corrosivity) does not apply to the solid debris waste because there are no free liquids in this waste. D001 (oxidizer) does not apply to the use of nitric acid for the same reason.
Hydrochloric acid	
Hydrofluoric acid	
Nitric acid	
Oxalic acid	
Sulfuric acid	
Base	
Sodium hydroxide	D002 does not apply to the solid debris waste because there are no free liquids in this waste.
Inorganic Chemicals	No RCRA-regulated inorganic chemicals are used
Aluminum nitrate	
Aluminum oxide	
Calcium chloride	
Diamond	
Ferric nitrate	
Ferrous salt	
Hydroxylamine nitrate	
Magnesium chloride	
Magnesium oxide	
Silicon carbide	
Sodium nitrite	
Sodium pyrophosphate	
Metals	No RCRA-regulated metals are used
Calcium	
Iridium	
Yttrium	
Organic Chemicals	
Diethylenetriamine	
Duco cement (glue)	
Epoxy mounting resin	
Ethanol	D001 (ignitability) does not apply because there is no free liquid in solid debris waste.
Ethylene glycol	
Fantastik	
Ion exchange resins	
Phenophthalein	
Sucrose	
UCAR C-34 cement	
Urea	

4.2 Toxicity Listings

EPA HWNs D007 (chromium), D008 (lead), and D009 (mercury) are applicable to only the calcined hydroxide cake waste generated by P/S code R8.

Sampling and analysis of waste material from Pu-238 waste streams has been performed to confirm that these waste streams do not contain regulated heavy metals above regulatory levels (TWCP-1698, TWCP-AK-2.1-011). Table 5 summarizes the analytical results, which show that all of the randomly selected items for the TCLP test are below the regulated concentrations. These analyses confirm the high purity of the SRS feed material, and the absence of RCRA-regulated metals from Pu-238 processing operations at TA-55.

Table 5. TCLP Concentrations (ppm) in Wastes from Pu-238 Operations

Description	Silver	Arsenic	Barium	Cadmium	Chromium	Lead	Selenium	Mercury
Detection Limit [a]	*0.022*	*0.33*	*0.0055*	*0.022*	*0.055*	*0.22*	*0.55*	*0.0001*
RCRA regulatory threshold	*5*	*5*	*100*	*1*	*5*	*5*	*1*	*0.2*
Metal I	0.031	---	0.14	---	---	---	---	0.0003 [b]
Metal II	--- [c]	---	0.17	---	--- [c]	---	---	0.005
Plastic I	---	---	0.62	0.44	---	---	---	--- [b]
Plastic II	--- [c]	---	0.39	---	0.093 [c]	---	---	0.0002
Plastic III	--- [c]	---	0.24	---	0.21 [c]	---	---	0.0002
Rubber I	---	---	1.8	---	0.099	---	---	--- [b]
Rubber II	--- [c]	---	0.34	---	0.071 [c]	---	---	0.0002
Combustible and rags I	--- [c]	---	0.32	0.057	--- [c]	---	---	0.0002
Combustible and rags II	--- [c]	---	0.37	0.101	0.079 [c]	2.1	---	0.0006
HEPA filter I	--- [c]	---	1.5	0.11	1.2 [c]	---	---	0.0001
HEPA filter II	--- [c]	---	1.4	0.83	2.7 [c]	---	---	0.0495
HEPA ALB [d]	---	---	0.006	---	0.058	---	---	--- [b]
HEPA SSH [d]	---	---	0.009	---	0.062	---	---	--- [b]

--- indicates "not detected," i.e., measured values below the detection limit.

[a] Detection limit represents the instrument detection limit multiplied by a dilution factor, in accordance with the Toxicity Characteristic Leaching Protocol

[b] Detection limit is 0.0003 ppm for these samples

[c] These data have been qualified during data validation. See Appendix C in TWCP-1698 for details

[d] Cold (non-radioactive) surrogate HEPA filter metal housing samples

Source: Table III.1 in TWCP-1698

5.0 VERIFICATION THAT IGNITABLE, REACTIVE, AND CORROSIVE WASTES WERE EXCLUDED

According to the WIPP WAP, "The prohibition of liquids and containerized gases prevents the shipment of corrosive, ignitable, or reactive wastes." Administrative controls on waste packaging were in place at various times to ensure the absence of such items from the waste stream.

- Liquids were prohibited from solid waste streams at TA-55 when the facility opened in January 1978. A waste management procedure written to cover operations at the new facility, *TA-55 Standard Operating Procedure (SOP) 406-GEN-R00*, stated that "Liquids are not permitted in any container of solid waste materials" (TWCP-3943).

- Chemical Waste Disposal Requests introduced in June 1980 included checkboxes which the waste generator was required to check if the waste contained corrosive acids or bases, or pyrophoric, flammable, corrosive, explosive, toxic, carcinogenic or highly reactive materials.

- The Certification Plan (TWCP-697) and related Generator Attachments (TWCP-701) were implemented in 1987. Waste generators were required to sign a statement on the WODF documenting that the waste contained "no free liquids, pyrophorics, explosives, compressed gases, powders or materials other than the indicated matrix." Checkboxes were also present for indicating the presence or absence of corrosive chemicals. Full implementation of this generator statement occurred in May 1987.

- Waste management inspectors perform visual examination of the waste prior to its initial packaging, thus allowing the inspectors to verify the generator's WODF statement (TWCP-701, Sections 3.8.5 to 3.8.6).

- In addition to the above-mentioned prohibitions on explosives in wastes, explosives were prohibited from TA-55 until installation of the Impact Test Facility in the early 1990s. Explosives continue to be banned in the solid waste streams up to the present time. In the event of a misfire or unconsumed explosives, the requirement is to destroy the unspent powder by burning (TWCP-4720).

- The Waste Profile Request Form (WPRF), which has been in use at LANL since 1991, includes a statement which must be authenticated by the waste generator, that the waste is not ignitable (flash point >200°F), reactive, or corrosive.

- The TA-55 Generator Attachments to the Certification Plan were updated in 1995 (TWCP-700) but the prohibition on liquids in the waste, and the waste management inspection, remained in effect.

Hence, since the inception of operations at TA-55, corrosive and reactive wastes have been excluded from TA-55 solid wastes through the prohibition of liquids.

The absence of these prohibited items is verified through radiography of each waste container and visual examination of selected containers during TWCP characterization activities. These data are used to assess the accuracy of AK information in accordance with *Reconciliation of Visual Examination and Radiography Information* (TWCP-QP-1.1-028). Any free liquids are remediated, and any containerized gases that are found to be present are removed, or the container is tagged as non-compliant by filing a Prohibited Waste Report in accordance with *Nonconformance Reporting and Tracking* (TWCP-QP-1.1-007).

6.0 VERIFICATION THAT INCOMPATIBLE CHEMICALS WERE PROHIBITED

Section 5.0 summarizes administrative controls in place at TA-55 that prohibit incompatible chemicals in the waste, and measures taken to verify their absence. In addition, all waste containers shipped from TA-55 to TA-54 for storage were evaluated for potentially incompatible chemicals in accordance with 49 CFR Subpart C—Segregation and separation chart of hazardous materials; Section 177.848, Segregation of hazardous materials, and were determined to be in compliance with this requirement.

7.0 VERIFICATION THAT THERE ARE NO COMPRESSED GASES, FREE LIQUIDS, NONRADIONUCLIDE PYROPHORICS, SEALED CONTAINERS GREATER THAN FOUR LITERS IN VOLUME, OR >1% RADIONUCLIDE PYROPHORICS

Most gases used at the TA-55 Plutonium Facility are stored outside the building and the gas is plumbed into the glovebox from outside the building (TWCP-4164). Occasionally, a lecture bottle may have been used for a process inside the building, but these bottles were kept outside of the glovebox with the gas plumbed into the glovebox. Consequently, compressed gas cylinders or containers are not expected to be in any of the TRU wastes generated by TA-55 operations.

Spray cans, especially WD-40, were in common use in TA-55 gloveboxes until May 1992 (TWCP-4166). These were routinely discarded as metal debris waste. From 1988 until May 1992, the protocol was to vent or puncture the spray cans inside the glovebox; venting was indicated by inserting a metal wire into the valve. After May 1992, spray cans were no longer used in gloveboxes.

Verification that individual waste drums do not contain compressed gases, free liquids, or sealed containers greater than 4 liters in volume is obtained from radiography of each waste container and visual examination of selected containers during TWCP characterization activities. Any free liquids are absorbed, and any sealed containers greater than 4 L in volume, or unpunctured or unvented gas containers, are removed; or else the container is tagged as non-compliant by filing a Prohibited Waste Report in accordance with *Nonconformance Reporting and Tracking* (TWCP-QP-1.1-007).

Administrative and procedural controls on the prohibited pyrophorics in TRU waste and the absence of pyrophorics has been verified through testing. For items of pyrochemical

salt waste, the procedures of oxygen sparging and/or carbonate oxidation have been used since May 1987 to ensure that pyrophorics were oxidized. In addition, screening tests on similar pyrochemical salts and residues (which contain higher amounts of plutonium) at the RFETS (TWCP-2501) have shown (1) no autoignition, (2) no spontaneous combustion, and (3) no sparking. Experimental results on the reactivity of LANL direct oxide reduction (DOR) salt with water and the reactivity in air of heated calcium metal nodules from DOR salts indicate the absence of "dangerous when wet materials" and pyrophoricity in these salts (TWCP-3730, TWCP-3731, TWCP-3732).

Chemical Waste Disposal Requests dated as early as June 1980 included boxes that were required to be checked if the waste contained pyrophoric, flammable, corrosive, or explosive materials.

In addition, for wastes generated after the implementation of the 1987 Certification Plan, Generator Attachments, associated waste packaging procedures, and quality assurance systems, the waste generator has signed a statement on the WODF for each waste item stating that waste contains "no free liquids, pyrophorics, explosives, compressed gases, powders or materials other than the indicated matrix." The TA-55 Attachment to the Certification Plan describes how these restrictions were verified by waste management personnel (TWCP-701, Sections 3.8.5 through 3.8.7).

8.0 VERIFICATION THAT THERE ARE NO POLYCHLORINATED BIPHENYLS (PCBs) IN THE WASTE STREAM

No PCBs were introduced into the nitrate operations, based on documentation in TA-55 procedures reviewed during the AK investigation and summarized in lists of process inputs documented in the TA-55 process AK reports.

- In the cement fixation process (P/S codes CF and HP), oils are sometimes added to drums of cemented waste. There is no indication these oils contain PCBs, and they are added to the 55-gallon drums of cement in small quantities (maximum of 6 liters [TWCP-3568/N-74]). The oils are primarily vacuum pump oils, along with some oils used in heat-treating (cooking or silicone oils) or in grinding (TWCP-3568/N-82). None of these oils are known to contain PCBs.

- All transformers known to contain PCBs have been tracked from initiation of operations of TA-55 in 1978. When any transformer oil is drained, the oil is handled by a subcontractor who is wholly responsible for its disposal; this oil does not enter the LANL disposal operations (TWCP-3568/N-82).

- Ballast in fluorescent light fixtures could contain PCBs, but at TA-55 these light fixtures are outside the gloveboxes and hence would not enter the TRU waste stream.

- Oil-filled capacitors are not known to have been used in TA-55 gloveboxes.

In addition, if the possibility exists for the waste to contain PCBs, RTR operators are required to check for indications of PCB-containing materials or PCB-contaminated materials. If there is reason to suspect that an item may contain PCBs (based on AK, operator training, or previous operator experience), then the operator submits a PWR and places a hold tag on the waste container (Section 6.6.6 and Table 3 in *Performing Nondestructive Testing Using the Mobile Real-Time Radiography System* [TWCP-DTP-1.2-008]).

9.0 CITED PROCEDURES AND REQUIREMENTS DOCUMENTS

- 40 CFR Part 261, Subpart C—Characteristics of hazardous waste, Sections 261.21 (*Characteristic of ignitability*), 261.22 (*Characteristic of corrosivity*), 261.23 (*Characteristic of reactivity*), and 261.24 (*Toxicity characteristic*)
- 40 CFR Part 261, Subpart D—Lists of hazardous waste, Sections 261.31 *(Hazardous wastes from non-specific sources)*, 261.32 *(Hazardous wastes from specific sources)*, and 261.33 *(Discarded commercial chemical products, off-specification species, container residues, and spill residues thereof)*
- 49 CFR Subpart C—Segregation and separation chart of hazardous materials. Section 177.848, *Segregation of hazardous materials*
- *Acceptable Knowledge Documentation* (TWCP-QP-1.1-021)
- *Nonconformance Reporting and Tracking* (TWCP-QP-1.1-007)
- *Performing Nondestructive Testing Using the Mobile Real-Time Radiography System* (TWCP-DTP-1.2-008)
- *Reconciliation of Visual Examination and Radiography Information* (TWCP-QP-1.1-028)
- *Waste Acceptance Criteria for the Waste Isolation Pilot Plant* (DOE/WIPP-069)
- *Waste Analysis at Facilities that Generate, Treat, Store and Dispose of Hazardous Waste* (EPA/OSWER 9938.4-03)
- *Hazardous Waste Facility Permit Issued to the Waste Isolation Pilot Plant* (EPA No. NM4890139088)
- *Waste Characterization Data Reconciliation with Acceptable Knowledge* (TWCP-DTP-1.2-064)

ACCEPTABLE KNOWLEDGE ROADMAP

P/S Codes: ASP, GPHS, MTL, P1, R8, RCI, SCP, WS

Copies of these documents are in the TWCP RMDC Center.

TWCP Record No.	Information Category Code*	Information	Source	Summary	Limitations
TWCP-0351	C	Pu-238 discard limits	TA-55 Waste Management, 539-GEN-R02, 10/18/96, Appendix J	Lists Pu-238 discard limits in various process materials.	None
TWCP-0352	C	Generic plutonium recovery process description	Wastes from Plutonium Conversion and Scrap Recovery Operation; LA-11069-MS; March 1998	Document describes the Pu residues and the various treatment approaches used in recovering Pu from scrap.	None
TWCP-0415	B	TA-55 Pu-238 processes	FSAR for TA-55 (Section 2.5.9, pp. 2-164 to 2-166)	Describes the TA-55 Pu-238 operations.	Document does not give information about RCRA constituents introduced or present in the processes.
TWCP-0697	B	Waste controls	Los Alamos Certification Plan, WCP-HSE7-CPL-01,R2, 1984	Waste was controlled to meet WIPP WAC requirements as early as 1984. Generator Attachments were used to describe and reference specific generator procedures.	Overview document - Generator Attachments provide more detailed information.
TWCP-0698	D	Material Type compositions	Memo from Bill Schueler, NMT-7.	Gives Material Type compositions	Does not give information on actual material used in the Pu-238 processes.
TWCP-0700	C	Waste controls	TA-55 Generator Attachment to the LANL Certification Plan, TRU-TA55-CPA-03,R00, 1995	Documents controls to meet WIPP WAC were implemented and how independent verification was accomplished.	Information is not extremely detailed.

* Information Category Codes: A = forms intended for use in waste certification, B = data from controlled databases and published documents, C = unpublished data, and D = interviews, memos, and letters

TWCP Record No.	Information Category Code*	Information	Source	Summary	Limitations
TWCP-0701	C	Waste controls	TA-55 Generator Attachment to the LANL Certification Plan, TRU-MST12-CPA-03,R00, 1987	Documents controls to meet WIPP WAC were implemented and how independent verification was accomplished.	Information is not extremely detailed.
TWCP-0813	D	Waste characterization	Memo from Davis Christensen, EM-SWO: 97-201	Clarifies the history of assigning EPA hazardous waste codes in the TRU Database to waste generated before 1993.	Indicates that EPA assignments made on the basis of AK in 1992 are subject to change through additional AK information.
TWCP-0816	D	Jim Foxx Interview on Number of Layers of Packaging	C.L. Foxx, Los Alamos National Laboratory	Provides an explanation of why some containers of combustible debris may be packaged with 6 layers of confinement	No direct way to differentiate between 4 and 6 layers of packaging
TWCP-0882 (UCNI)	D	Secondary Radionuclides and Toxic Metals in TA-55 TRU Waste	Memo from TA-55 Subject Matter Expert C.L. (Jim) Foxx	Wastes may be either depleted or enriched in Am-241 and U-234, depending upon whether the source of contamination is the process product or the process residue.	Text does not specifically discuss Pu-238 processes although these P/S codes are listed in the table attached to the memo
TWCP-0886	C	Color Flow Diagram of Pu-processes at TA-55.	Diagram from Jim Foxx	Indicates that process inputs are thermally treated and that heavy metals from process inputs end up in the nitric acid evaporator bottoms.	Does not indicate solvent input to processes.
TWCP-0887	D	Defense and non-defense TRU waste management	Memo from Jim Foxx	Wastes generated from defense and non-defense activities were not segregated at TA-55 through 1997.	None
TWCP-0934	D	Pu-238 and Pu-239 waste management	Memo from TA-55 Subject Matter Expert C.L. (Jim) Foxx	Pu-238 and Pu-239 processes and the wastes generated from those processes were segregated at TA-55.	None

* Information Category Codes: A = forms intended for use in waste certification, B = data from controlled databases and published documents, C = unpublished data, and D = interviews, memos, and letters

TWCP Record No.	Information Category Code*	Information	Source	Summary	Limitations
TWCP-1025	C	Characterization of LWRHU waste	LANL Report number LA-11166-MS pp. 8, 9, 14	Provides tables of summarized analytical results for as-received and partially processed Pu-238 used in the Galileo LWRHU process.	Materials in these waste streams would have been produced as the result of processing many of the lots.
TWCP-1026	C	Characterization of MWG waste	LANL Progress Report numbers LA-9170-PR LA-9672-PR LA-11217-PR LA-11220-PR LA-11346-PR LA-12236-PR LA-13258-PR	Tables of trace element analytical results show that some RCRA metals are present below regulatory threshold limits in the waste from the Milliwatt Generator Program, and allow calculation of maximum concentration limits for other RCRA metals.	None
TWCP-1027	B	Characterization of epoxy cement used in Pu-238 process	MSDS for epoxy cement, UCAR C-34, Union Carbide Corporation	Indicates that the epoxy cement used in the Pu-238 process does not contain any RCRA-regulated materials.	None
TWCP-1030	C	Characterization of LWRHU waste	LANL Report number LA-13143-MS pp. 5-6, 7-8, 17-18.	Summarized analytical results of as-received and partially processed Pu-238 materials used in the Cassini LWRHU process.	Materials in these waste streams generally would have been produced as the result of processing many of the lots.
TWCP-1037	D	^{238}Pu fabrication process description	Written information obtained from a TA-55 waste management expert.	Detailed information of all facets of ^{238}Pu fabrication activities.	References to documents providing additional information are not provided in the memo, but have been added to the AK Summary Report.
TWCP-1044	D	Waste characterization	SRS Memo NMS-EHB-970073, March 12, 1997	Describes the SRS process for producing the Pu-238 that was used at TA-55 and presents analyses for metals in the Cassini material.	No flow diagram included.

* Information Category Codes: A = forms intended for use in waste certification, B = data from controlled databases and published documents, C = unpublished data, and D = interviews, memos, and letters

TWCP Record No.	Information Category Code*	Information	Source	Summary	Limitations
TWCP-1698		Analyses of TRU waste from TA-55-43, Lot No. 1	Cover letter and enclosed report, "Sampling and Analysis Project Validates Acceptable Knowledge on TA-55-43, Lot No. 01"	Analytical results confirm that TA-55-43 is not a hazardous waste regulated by RCRA	None
TWCP-2501	B	"Backlog Waste Reassessment Baseline Book, Waste Form 34"	Rocky Flats Environmental Technology Site Report 1995	Page WF34-10 contains results of tests for corrosivity	Tests are on residues rather than waste that is lower in Pu content; hence, they are conservative.
TWCP-3545/P238-01	C	General process information	Comments from Jim Foxx on the draft ^{238}Pu AK Summary Report, 11/99	Details for the ^{238}Pu process, specifically RCRA-regulated metals in the R8 process and radioisotope information.	None
TWCP-3545/P238-02	D	General ^{238}Pu process information	Interview with Jim Foxx, 9/21/99	Waste generated from ^{238}Pu processes.	None
TWCP-3545/P238-03	C	Pu-238 fuel fabrication process description (P/S code P1)	Process flow diagram for Routine Pu-238 Heat Source Production – Fuel Fabrication, 5/14/98	Overview of the Pu-238 fuel fabrication process, identifying steps within the process and process outputs. Date established is 9/25/91.	None
TWCP-3545/P238-04	C	Heat source production process description (P/S code P1)	Sampling PuO_2 Procedure; HS-CMB11-PP13, Rev. 0 through Rev. 3, 2/20/80 through 3/24/82; HS-MST11-PP-13, Rev. 4 through Rev. 10, 10/22/82 through 4/26/89	Step-by-step instructions for sampling PuO_2 during processing operations.	The P/S code is not identified in the procedure. Based on the process described in the procedure and the flow diagram for P1 Fuel Fabrication, this procedure is assigned to P/S code P1.
TWCP-3545/P238-05	D	General ^{238}Pu process information	Interview with Jim Foxx, 8/31/99	Waste generated from specific ^{238}Pu processes.	None

* Information Category Codes: A = forms intended for use in waste certification, B = data from controlled databases and published documents, C = unpublished data, and D = interviews, memos, and letters

TWCP Record No.	Information Category Code*	Information	Source	Summary	Limitations
TWCP-3545/P238-06	C	Chemical list, process description (P/S P1)	Particle Size Analysis of Oxide Powders Procedure, HS-NMT9-PP-42, Rev. 0 through Rev. 1, 4/22/91 through 12/11/91	Step-by-step instructions for analyzing metal oxides and the waste disposal process.	The P/S code is not identified in the procedure. Based on the process described in the procedure and the flow diagram for P1Pellet Production, this procedure is assigned to P/S code P1.
TWCP-3545/P238-07	C	Pellet production process description (P/S code P1)	Process flow diagram for Routine Pu-238 Heat Source Production – Pellet Production, 5/14/98	Overview of the pellet production process, identifying steps within the process and process outputs. Date established is 9/25/91.	None
TWCP-3545/P238-08	C	Scrap and process residues process description (P/S code P1)	Process flow diagram for Routine Pu-238 Heat Source Production – Scrap and Process Residues Processing, 5/14/98	Overview of the residues processing process, identifying steps within the process and process outputs. Date established is 6/16/88.	None
TWCP-3545/P238-09	C	Metallography process description (P/S code MTL)	Process flow diagram for Metallography, 6/22/97	Overview of the metallography process, identifying steps within the process and process outputs. Date established is 7/26/94.	None
TWCP-3545/P238-10	C	Chemical list, process description (P/S code MTL)	Ceramography of $^{238}PuO_2$ fuel samples; HS-NMT9-PP-44, Rev. 0, 1/8/92	Step-by-step instructions for the preparation and examination of $^{238}PuO_2$ fuel samples and the waste disposal process.	The P/S code is not identified in the procedure. Based on the process described in the procedure and the flow diagram for MTL, this procedure is assigned to P/S code MTL.
TWCP-3545/P238-11	C	Scrap processing process description (P/S code SCP)	Process flow diagram for Routine Pu-238 Scrap Processing, 8/27/91	Overview of the scrap processing operation, identifying steps within the process and process outputs. Date established is 6/16/88.	None

* Information Category Codes: A = forms intended for use in waste certification, B = data from controlled databases and published documents, C = unpublished data, and D = interviews, memos, and letters

TWCP Record No.	Information Category Code*	Information	Source	Summary	Limitations
TWCP-3545/P238-12	C	$^{238}PuO_2$ transfer process description (P/S code SCP)	Introductory Glovebox Transfer of an EP-60 into an EP-61, HS-NMT9-PP-46, Rev. 0 through Rev. 1, 12/23/91 through 9/24/92	Step-by-step instructions for transferring $^{238}PuO_2$ from an inner shipping container into an outer shipping container.	None
TWCP-3545/P238-13	C	Chemical list and process description (P/S code RCI)	Decontamination of Ir Using Molten $MgCl_2$, HS-NMT9-PP-38, Rev. 0, 5/9/90 through 10/8/92	Provides step-by-step instructions for decontaminating Ir coated with $^{238}PuO_2$.	The P/S code is not identified in the procedure. Based on the process described in the procedure and the flow diagram for RCI, this procedure is assigned to P/S code RCI. Handwritten note at top of procedure: "obsolete 10/8/92 per WI 1392." This agrees with the "SOP Document History Report" attached to the procedure.
TWCP-3545/P238-14	C	Process description (P/S code RCI)	Process flow diagram for Recovery of PuO2 238 from Contaminated Iridium, 6/10/91	Overview of the ^{238}Pu recovery process, identifying steps within the process and process outputs. Date established is 5/15/91.	None
TWCP-3545/P238-15	C	Chemical list, process description (P/S code RCI)	Dissolution of Ir by Electrochemical Methods; HS-NMT9-PP-39, Rev. 0, 5/9/90	Step-by-step instructions for decontaminating Ir coated with $^{238}PuO_2$ using electrochemical dissolution.	The P/S code is not identified in the procedure. Based on the process described in the procedure and the flow diagram for RCI, this procedure is assigned to P/S code RCI. Handwritten note at top of procedure: "obsolete 10/8/92 per WI 1392." This agrees with the "SOP Document History Report" attached to the procedure.

* Information Category Codes: A = forms intended for use in waste certification, B = data from controlled databases and published documents, C = unpublished data, and D = interviews, memos, and letters

TWCP Record No.	Information Category Code*	Information	Source	Summary	Limitations
TWCP-3545/P238-16	C	Chemical list, process description (P/S code R8)	238Pu Waste Solidification, HS-MST11-PP-34, Rev. 0, 8/4/86; HS-NMT9-PP-34, Rev. 1 through Rev. 3, 9/6/90 through 12/9/92	Step-by-step instructions for solidifying ^{238}Pu waste solutions.	The P/S code is not identified in the procedure. Based on the process described in the procedure and the flow diagram for R8 Waste Solidification, this procedure is assigned to P/S code R8.
TWCP-3545/P238-17	C	^{238}Pu waste solidification process description (P/S code R8)	Process flow diagram for ^{238}Pu Waste Solidification, 2/25/99	Overview of the ^{238}Pu solidification process, identifying steps within the process and process outputs. Date established is 1/27/84.	None
TWCP-3545/P238-18	C	Feed input for ^{238}Pu solidification process (P/S code R8)	Email from Jim Foxx, "RCRA Codes for Pu-238," 12/9/99	Analytical results for RCRA-regulated metals in analytical solutions feeding the ^{238}Pu solidification process.	Some of the detection limits appeared to be above the regulatory limits
TWCP-3545/P238-19	C	Chemical list, process description (P/S code R8)	Recovery of Plutonium-238 from Sucrose, 483-REC-R00 through R01, 5/17/83 through 9/30/83; Recovery of Plutonium-238 from Sucrose Solutions; HS-MST11-PP-36, Rev. 0, 12/18/87	Step-by-step instructions for recovering ^{238}Pu from sucrose solutions.	The P/S code is not identified in the procedure. Based on the process described in the procedure, this procedure is assigned to P/S code R8 (^{238}Pu recovery from sucrose). Handwritten note at top of 483-REC-R01: "Transferred to MS-11." Handwritten note at top of HS-MST11-PP-36 procedure: "obsolete 5/11/92 per WI 1324."
TWCP-3545/P238-20	D	Process description and chemicals used	Interview with Jim Foxx and Gary Rinehart	Details on process description and chemicals used in the processes based on a review of the draft Pu-238 AK Summary Report.	None
TWCP-3545/P238-21	D	Chemicals used in P/S code RCI	Interview with Jake Espinosa	Specific information regarding the electrolyte solution and electrodes used in the RCI process.	None

* Information Category Codes: A = forms intended for use in waste certification, B = data from controlled databases and published documents, C = unpublished data, and D = interviews, memos, and letters

TWCP Record No.	Information Category Code*	Information	Source	Summary	Limitations
TWCP-3545/P238-22	C	Process descriptions for P/S codes ASP, PPD, and WS	Information provided by Jim Foxx (1/17/00)	Process flow diagram for P/S codes ASP, PPD, WS	Procedures describing the process for the P/S codes have not been identified.
TWCP-3545/P238-23	D	Process information	Email from John Musgrave conveying information from Jim Foxx.	LWRHU and MWG processes are performed under P/S code P1.	None
TWCP-3568 /N-74	C	Chemical list; process description (P/S code CF)	Organic Liquid Emulsification, TRU-NMT2-DP-13, R00; TRUWM-TA55-DP-13-R00; 8/30/93 through 9/30/94	Emulsifying waste oil and other organic liquids for cement fixation.	None
TWCP-3568 /N-82	C	Clarification of specific processes within the nitrate operations at TA-55	Jim Foxx, SME, response to comments received on the *Acceptable Knowledge Summary Report for TA-55 Nitrate Operations*, draft dated 2/25/00	Resolutions to the questions and issues raised by Pam Rogers during her review of the *Acceptable Knowledge Summary Report for TA-55 Nitrate Operations*, draft dated 2/25/00	Information is based on SME knowledge.
TWCP-3730 (UCNI)	B	Pyrophoricity characterization	Characterization of Direct Oxide Salts (LA-CP-95-0098)	Hydrogen generation and pyrophoricity of DOR salts. Also gives reference for MSE, ER, and Cr-containing salts.	None
TWCP-3731	D	Sodium pyrophoricity in pyrochemical salts	Memo (MST-12-ARO-88-052)	Treatment of sodium in salts is effective	Sodium only
TWCP-3732	C	Experimental data on calcium pyrophoricity in salts	Memo (MST-12-ARO-88-077)	Treatment of calcium in salts is effective	Calcium only
TWCP-3943	B	Procedure for Waste Management at TA-55	TA-55 Document, 406-GEN-R00	Contains information on waste management procedures in 1978	None, but doesn't address today's waste management concerns

* Information Category Codes: A = forms intended for use in waste certification, B = data from controlled databases and published documents, C = unpublished data, and D = interviews, memos, and letters

TWCP Record No.	Information Category Code*	Information	Source	Summary	Limitations
TWCP-4162	D	Segregation of non-defense wastes from defense wastes	Interview with Jim Foxx, 10/12/00	Wastes from various processes were not segregated by funding source until recently (1997 or 1998), but rather were segregated and packaged based on waste type	Specific date for segregation by funding source not given
TWCP-4164	D	Use of gases in PF-4	Interview with Jim Foxx, 10/16/00	Most gases used at PF-4 are stored outside the building and the gas is plumbed into the glovebox from outside the building.	None
TWCP-4166	D	Disposal of spray cans used in gloveboxes	Interview with Jim Foxx, 10/17/00	Spray cans, especially WD-40, were in common use in TA-55 gloveboxes until May 1992. These were routinely discarded as metal debris waste. From 1988 until May 1992, the protocol was to vent or puncture the spray cans inside the glovebox; venting was indicated by inserting a metal wire into the valve. After May 1992, spray cans were no longer used in gloveboxes.	None
TWCP-4167	D	Segregation of non-defense wastes from defense wastes	Interview with Jim Foxx, 10/18/00	Wastes from various processes were not segregated by funding source, waste-generating process, or waste-generating location (e.g., room or glovebox) until recently (August 27, 1998), but rather were segregated and packaged based on waste type	None

* Information Category Codes: A = forms intended for use in waste certification, B = data from controlled databases and published documents, C = unpublished data, and D = interviews, memos, and letters

TWCP Record No.	Information Category Code*	Information	Source	Summary	Limitations
TWCP-4720	B	Describes the procedure to be taken at TA-55 in the event of a misfire or unconsumed explosives (from the Impact Test Facility 40-mm gun, P/S codes ITF and ITF4) to ensure that explosives do not enter the waste stream	40-mm Powder Breech Project Waste Management Plan, Rev. 2 (issued March 27, 2000)	Procedure to be taken at TA-55 in the event of a misfire or unconsumed explosives (from the Impact Test Facility 40-mm gun) to ensure that explosives do not enter the waste stream	Does not appear to be a controlled document. Without revision history, cannot tell when this document was first issued, and how the potential for unconsumed explosives was addressed when the Impact Test Facility (ITF) began in 1996
TWCP-5086	B	P/S Codes for TA-55 waste items, listed by drum	P/S codes for waste items in individual drums are either from the TA-55 Waste Management System or from the certified data base	P/S codes for waste items in individual waste containers from TA-55	Only some drums are included
TWCP-5600	D	Description of P/S code ASP, including process flow chart	Interview with SME on work conducted under P/S code ASP	Description and flow chart of steps involved in P/S code ASP, Pu-238 Aqueous Scrap Recovery	None
TWCP-5706	B	Procedure for Direct Oxide Reduction of 238PuO2 (P/S code WS)	NMT9-SOP-0089-R02, Direct Oxide Reduction of 238PuO2	Description of process for P/S code WS (Direct Oxide Reduction of 238PuO2)	None
TWCP-5707	D	Description of P/S code WS	Interview with SME on work conducted under P/S code WS	Description of work conducted under P/S code WS, Pu-238 Direct Oxide Production	None
TWCP-AK-2.1-003, R.2	B	Summarizes AK information on processes conducted in the TA-55 metal operation processes	*Process Acceptable Knowledge Report for Metal Operation Processes*	Discusses P/S code	None
TWCP-AK-2.1-004, R.2	B	Summarizes AK information on processes conducted in the TA-55 miscellaneous processes	*Process Acceptable Knowledge Report for Miscellaneous Operations at TA-55*	Discusses P/S code WM	None

* Information Category Codes: A = forms intended for use in waste certification, B = data from controlled databases and published documents, C = unpublished data, and D = interviews, memos, and letters

TWCP Record No.	Information Category Code*	Information	Source	Summary	Limitations
TWCP-AK-2.1-005, R.2	B	Summarizes AK information on processes conducted in the TA-55 nitrate operations	*Process Acceptable Knowledge Report for Nitrate Operations at TA-55*	Discusses P/S codes CF, ED, HP, MPD, SC, SP, and TDC	None
TWCP-AK-2.1-006, R.2	B	Summarizes AK information on processes conducted in the TA-55 pyrochemical operations	*Process Acceptable Knowledge Report for Pyrochemical Operations at TA-55*	Discusses P/S code	None
TWCP-AK-2.1-007, R.2	B	Summarizes AK information on processes conducted in the TA-55 special processing operations	*Process Acceptable Knowledge Report for Special Processing at TA-55*	Discusses P/S code PPD	None
TWCP-AK-2.1-011, R.0	B	Waste stream report that relies upon the AK information presented in the Pu-238 process AK report	*Acceptable Knowledge Summary Report for Waste Streams TA-55-43, TA-55-44, TA-55-45, TA-55-46 and TA-55-47*	Relies on information in the Pu-238 process AK report	None
TWCP-PLAN-0.2.7-001,R.5	B	Summarizes AK information for individual TRU waste containers	*Los Alamos National Laboratory Transuranic Waste Characterization AK Information Summary*	Assignment of individual TRU waste containers to specific waste streams	Out of date

* Information Category Codes: A = forms intended for use in waste certification, B = data from controlled databases and published documents, C = unpublished data, and D = interviews, memos, and letters

MAP OF LANL

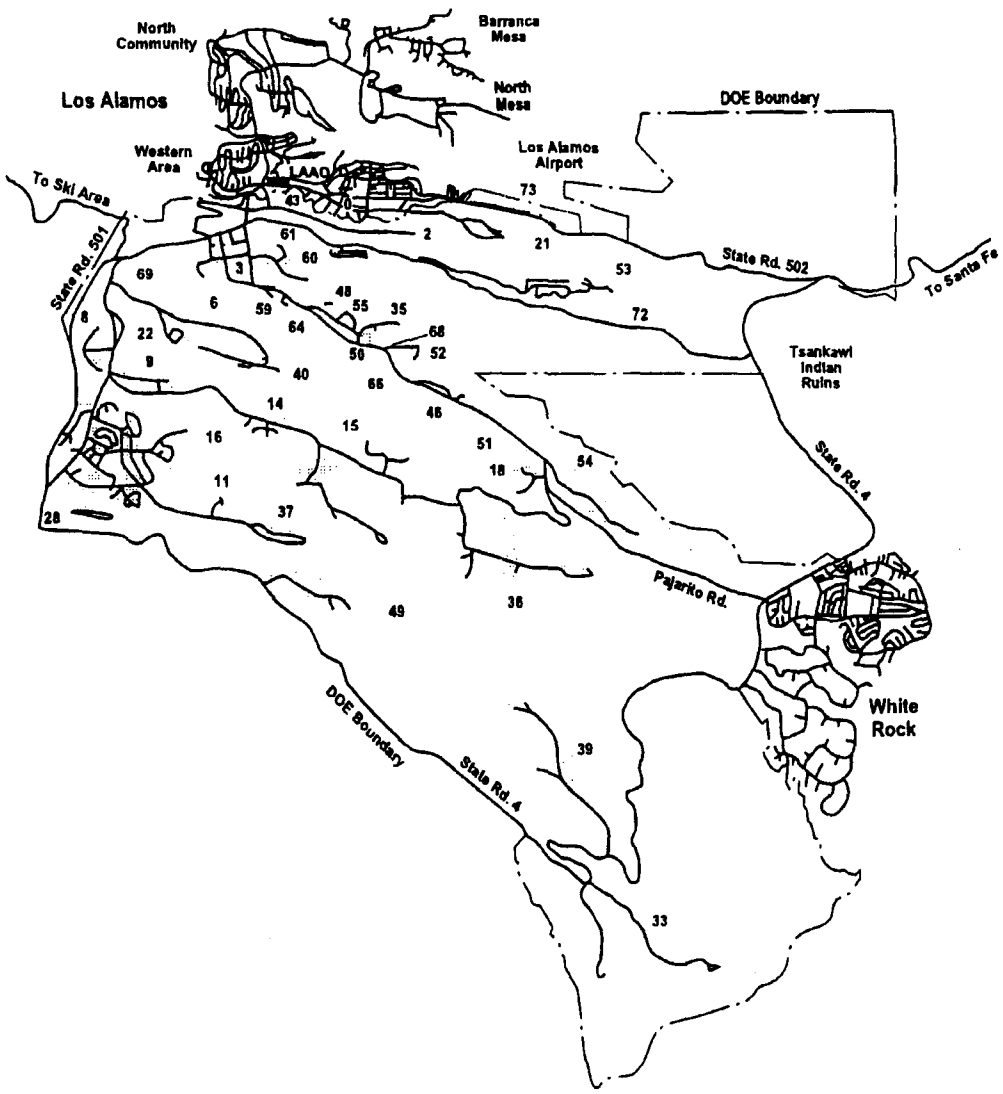

Technical Area Locations

TA-0	Unassigned Land Reserve
TA-2	Omega Site
TA-3	South Mesa Site
TA-5	Beta Site
TA-6	Two Mile Mesa Site
TA-8	Anchor Site West
TA-9	Anchor Site East
TA-11	K-Site
TA-14	Q-Site
TA-15	R-Site
TA-16	S-Site
TA-18	Pajarito Laboratory
TA-21	DP-Site
TA-22	TD-Site
TA-28	Magazine Area A
TA-33	HP-Site
TA-35	Ten Site
TA-36	Kappa Site
TA-37	Magazine Area C
TA-39	Ancho Canyon Site
TA-40	DF-Site
TA-41	W-Site
TA-43	Health Research Lab & DOE Headquarters
TA-46	WA-Site
TA-48	Radiochemistry Site
TA-49	Frijoles Mesa Site
TA-50	Waste Management Site
TA-51	Radiation Exposure Facility
TA-52	Reactor Development Site
TA-53	Meson Physics Facility
TA-54	Waste Disposal Site
TA-55	Plutonium Facility Site
TA-57	Fenton Hill Site
TA-58	Two Mile North Site
TA-59	OH-Site

MAP OF TA-55

Note: The Plutonium Facility, Building PF-4, is labeled PF-4 on this map.

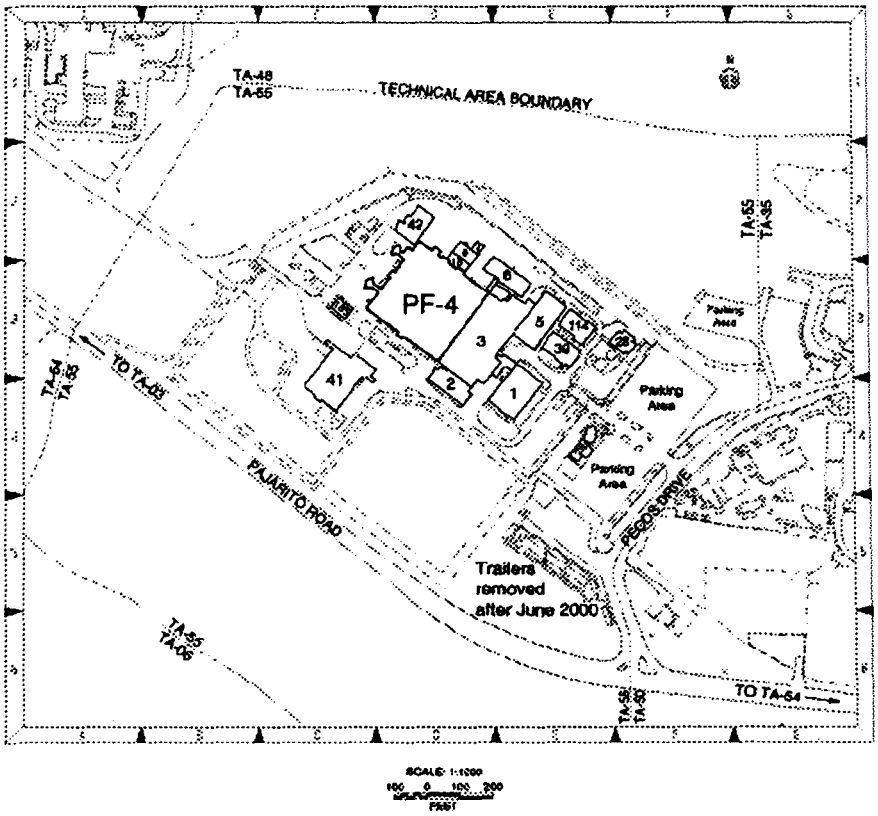

TIMELINE FOR Pu-238 PROCESSES

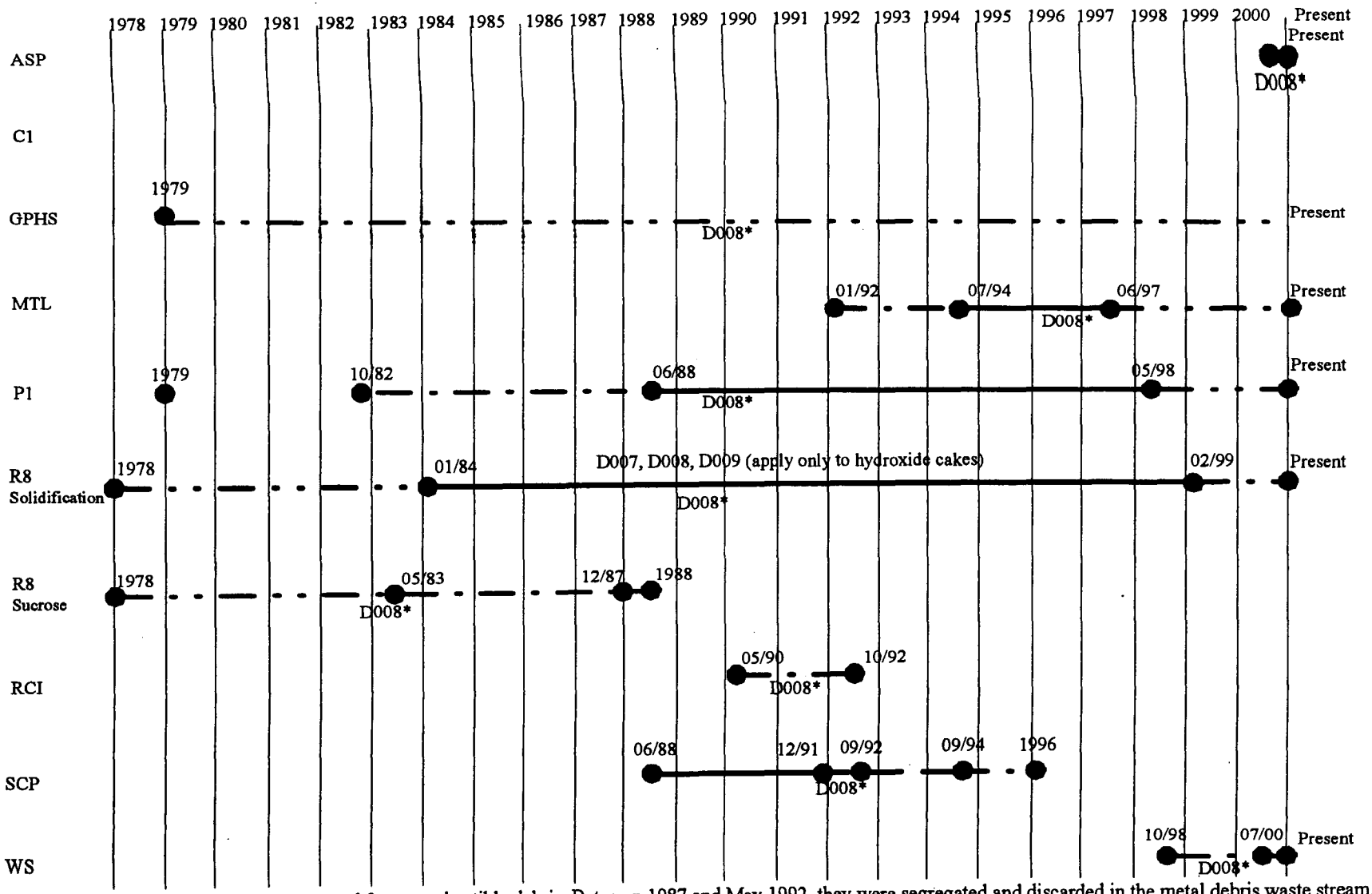

*Prior to 1987, leaded gloves were not segregated from combustible debris. Between 1987 and May 1992, they were segregated and discarded in the metal debris waste stream. Since May 1992, they have been routinely segregated and assigned to a leaded glove waste stream, still under the originating P/S code (TWCP-4166).

TIMELINE EXPLANATION

The P/S code is established either in the P/S diagrams or in both (or all) revisions of the procedures designating the start and end dates (e.g., Rev. 0 to Rev. 1 or Rev. 0 to Rev. 5.

The P/S code is not identified in the procedure, but the process description matches the P/S code and the description in previous or later revisions of the same procedure.

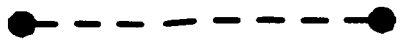

Extrapolate out two (2) years beyond the last revision date for the procedure to the next possible review date.

Time period based on subject matter expert comments.

PROCESS INPUTS AND OUTPUTS

P/S Code	P/S Title	Process Inputs		Process Outputs		EPA Codes[2]	References[3]
		Feed Stream(s)	Chemicals/Reagents	Product	Waste Stream[1]		
ASP	Aqueous Scrap Processing	Scrap items, oxide	Nitirc acid, sodium hydroxide, sodium oxalate	Plutonium oxalate, plutonium hydroxide	Debris	*D008	TWCP-5600
GPHS	General Purpose Heat Source	Pu-238 oxide	Yttrium metal, UCAR C-34 cement	Heat sources	Debris	*D008	P238-01 P238-07 P238-08
MTL	Metallography	Samples from P1	Epoxy mounting resin, aluminum oxide, diamond powder, hydrobromic acid, hydrochloric acid, hydrofluoric acid	Polished samples (archived in glovebox line)	Aqueous abrasive slurries to P/S code R8, debris	*D008	P238-10 P238-20
P1	Heat Source Production	Pu-238 oxide	Yttrium metal, UCAR C-34 cement	Heat sources	Debris	*D008	P238-01 P238-07 P238-08
R8	Waste Solidification	Analytical solutions from CHM-1, CLS-1, NMT-1, C-AAC; metallography; heat source production, and plutonium decontamination operations	Sodium hydroxide, ferric nitrate, phenolphthalien, ethanol,	No product	Hydroxide cakes, debris	HWNs apply only to hydroxide cakes D006, D007, D008, *D008 D009, D011	P238-02 P238-14 P238-15 P238-16 P238-17 P238-18 P238-20 P238-21

P/S Code	P/S Title	Process Inputs		Process Outputs		EPA Codes[2]	References[3]
		Feed Stream(s)	Chemicals/Reagents	Product	Waste Stream[1]		
R8	Recovery of Pu-238 from Sucrose Solutions	Sucrose solutions (containing sodium pyrophosphate and sucrose) used in particle size analysis of $^{238}PuO_2$	None	calcined $^{238}PuO_2$ for reprocessing (if above DL)	Calcined residue of sucrose. Solid debris waste including stainless steel, ceramic, glassware, Tygon tubing, filter paper	*D008	P238-02 P238-19
RCI	Pu-238 Recovery from Iridium	Iridium contaminated with Pu-238 oxide	Magnesium chloride, nitric acid, hydrochloric acid, sulfuric acid	Cleaned iridium metal	Debris, magnesium oxide crucibles	*D008	P238-13 P238-14 P238-20
SCP	Scrap Processing	Pu-238 oxide	Physical process – no chemicals used	Pu-238 oxide	Debris	*D008	P238-11 P238-12
WS	Pu-238 Direct Oxide Reduction	plutonium oxide (high purity)	Calcium metal, oxygen gas, chlorine gas, calcium chloride, calcium fluoride	plutonium metal	Calcium chloride salt, magnesia crucibles, calcium oxide, calcium metal, debris	*D008	TWCP-5706 TWCP-5707

[1] All P/S codes generate routine laboratory debris waste consisting of glassware, plastics, ceramic materials, paper, rags, HEPA filters, metal containers, brushes, and small tools. Leaded gloves may also be generated and are segregated.

[2] See discussion in Section 4.0 for details on the applicability of the RCRA codes listed in this column. The RCRA hazardous waste codes listed apply to the solid TRU waste only and not to any other waste forms that may undergo further treatment or processing (e.g., evaporation or cement fixation). The resulting treated waste stream is evaluated for hazardous waste constituents and assigned the applicable EPA hazardous waste codes. All P/S codes have the potential to generate leaded gloves. The gloves are segregated from other metal debris waste and are assigned EPA hazardous waste code D008 under the originating P/S code.

[3] Refer to the Acceptable Knowledge Roadmap in Attachment 1. References listed as P238-*nn* (where *nn* is a 2-digit number) are in TWCP-3545.

*D008 due to leaded gloves

SIMPLIFIED Pu-238 PROCESS FLOW DIAGRAMS: AQUEOUS SCRAP PROCESSING (P/S code ASP) (TWCP-5600)

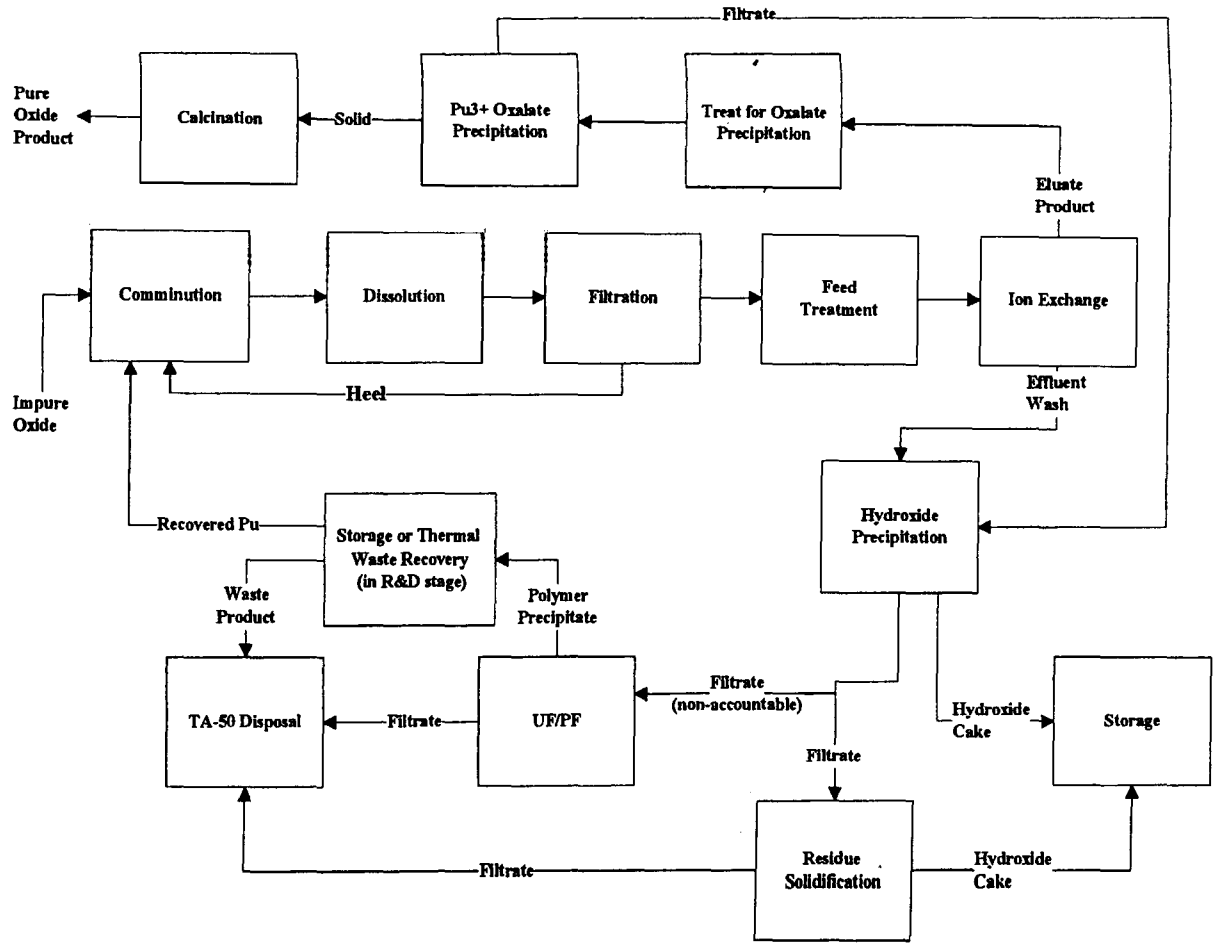

SIMPLIFIED Pu-238 PROCESS FLOW DIAGRAMS: OTHER Pu-238 PROCESSES

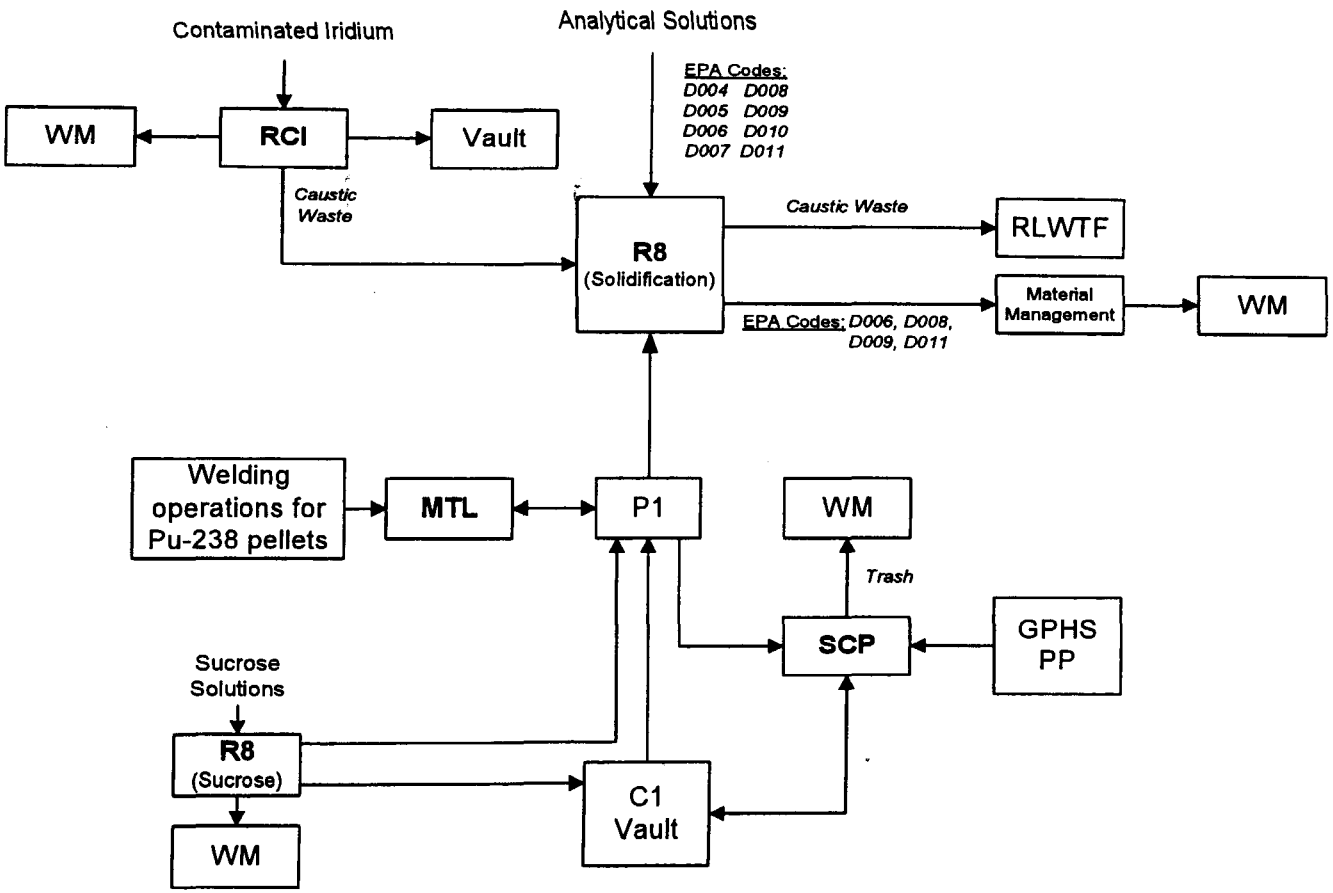

Decision/Discrepancy Resolution Documentation
TA-55 Pu-238 Operations

Item Identification*	AK No. 1	Source No. 1	AK No. 2	Source No. 2	Decision/Discrepancy	Rationale**
WS	WS performed in 10/98 and 10/99	TWCP-5707	P/S WS--'75-'77 experimental work performed at DP site, waste not out of TA-55	TWCP-3545/P238-2	Process report describes activities as in TWCP-5707	C—meeting with SMEs indicate work performed under P/S code WS in '75-'77 was at another site, not TA-55, so waste did not ever become TA-55 owned. See attached meeting notes.
MTL	The older metalography operations(before 1992) used solvent (e.g. trichloroethane)	TWCP-3545/P238-2	Process report section 3.5 states Pu-238 processes at TA-55 used no organic solvents.	Process Report	Process report does not list any solvents.	C—meeting with SMEs indicated P/S code MTL did not begin until after 1992, so no trichloroethane would be in the waste post 1992. See attached meeting notes.
PTS	Indicates that P/S code PTS was associated with R and D research studies with Pu-238.	TWCP-3545/P238-2	Process report does not describe PTS	Process Report	PTS code not included in process report.	C—Pu-238 PTS operations were performed in another glovebox, therefore this waste would be in under another P/S code per John Musgrave. PTS is Pretreatment studies on LANL and RFETS material, it would be under nitrate operations. See attached meeting notes.
PI	P/S Code PI should be taken from Pu-238 report and added to another report (report not referenced). Also indicates time line back to 1978	TWCP-3545/P238-20	PI still discussed in this summary report Report timeline goes back to 1979.	Summary report	PI P/S code is very similar to CHS and LWRHU and the waste streams would be the same. Therefore the PI information should be moved to another report.	C—in meeting with SMEs, this statement meant that this information was in a previous Pu-238 draft report and needed to be included in this current report which it is. See attached meeting notes.

Item Identification*	AK No. 1	Source No. 1	AK No. 2	Source No. 2	Decision/Discrepancy	Rationale**
All	Leaded gloves were always separated	TWCP-3545/P238-2	Process report says prior to May 1992, lead gloves were discarded as metal debris and were not segregated from other metal wastes	Process Report, section 3.6.1		A—Process report is correct. The first statement is not correct per meeting with SMEs. See attached meeting notes.
General	Only lead contaminated debris is lead-lined gloves	TWCP-3545/P238-20	Cd, Cr, and Pb are typical impurity in Pu Oxide product	TWCP-1044	Process report, section 3.5 refers to 1044 stating there are no RCRA constituents. Questions remain if analytical data indicates they are below TCLP limits.	B—Gloves segregated after 1992 per Jim Foxx, but apply waste code to all P/S codes. See attached meeting notes. Analytical data in TWCP-2102 indicate below TCLP limits.
All	Two issues need to be resolved by R. Glenn—needing more info regarding electrode and electrode solutions; generators signing data package to confirm certain materials were not in the waste	TWCP-3545-P238-20	No discussion of either of these issues in the Process report	Process report		C—At the time TWCP-3545-P238-20 was documented, the P/S code was unknown. SMEs said that the correct P/S code was RSI and this refers to decontamination operations, which could have been performed two ways, using dilute mineral acid, or electrolyte ($MgCl_2$). No RCRA constituents. Issues are resolved. See attached meeting notes.

Sandy Wander — AK Investigator — Sandy Wander — 2/25/02
Evaluator (Print Name) — Title — Signature — Date

Pamela Rogers — Pamela Rogers — 2/26/02
SPM Review (Print Name) — Signature — Date

* Item identification can be PS Code, waste stream, drum ID, item ID, or other identification of items affected.
** Rationale code: [A=Professional Judgment; B=Most Conservative Decision; C=Other (specify)]

Source: TWCP-07907

D015-AK7

QP-00-004,R.0
Effective Date: 06/18/03

TWCP-15417

RECORDS SUBMITTAL

INSTRUCTIONS: This form is prepared by the record source when submitting individual records, batch data reports, or a records package to the RMDC Center. For records packages, a Table of Contents (TOC) must also be submitted. Each record submitted requires a complete form.

MANDATORY: X To the best of my knowledge, the record(s) have no radioactive contamination.

Signature: [signature]

RECORD TYPE:

X Project 2010 ☐ Facility (RRES)

☐ Other: _____ ☐ UCNI ☐ Proprietary

RECORD SOURCE:

Submittal Date: 7/25/03 Z No.: 109592 Name/Org: PATRICIA PATTON – RRES-CE

Originator: JOHN MUSGRAVE Organization: NMT

TYPE OF RECORD/ACTION TO BE TAKEN

X Individual Record ☐ Batch Data Report ☐ Records Package (+ TOC)

X New ☐ Revision* ☐ Addition* ☐ Supersedes*

*Record Barcode Number: _____ *Review Cycle (if applicable): ☐ Yes ☐ No ☐ NA

RECORD ID NUMBER: (e.g., memo symbol number, procedure (include revision), deficiency number, batch data report number, unique record identifier if applicable):

TWCP-AK-2.1-009, R.0

Record Date: 8/7/01 Physical Page Count: 73 X Single Sided ☐ Double Sided

Category Number: (from page two): 07

RECORD TITLE, SUBJECT, AND/OR KEYWORDS:

TWCP-AK-2.1-009, R.0/IC1 Process AK Report for Pu-238 Operations at TA-55 (INCLUDES INTERIM CHANGE 1) - LA-UR-01-4200 – LA-UR-02-1709

RECORD CENTER USE ONLY

☑ Accepted Date: 7-28-03 ☐ Return Date: _____

Signature: Danette Martinez Resubmitted: _____

RIDs Type: LT

X-Sender: chsmith@norris-mail.lanl.gov
X-Mailer: QUALCOMM Windows Eudora Version 5.1
Date: Thu, 24 Jul 2003 10:37:16 -0600
To: pgp@lanl.gov
From: Cathy Smith <chsmith@lanl.gov>
Subject: Please retire Process AK Reports
Cc: sgw@lanl.gov
X-Scanned-By: MIMEDefang 2.35

Hi Patsy,

As we discussed yesterday, here is the list of Process AK Reports that we would like to retire as controlled documents and submit as records to RMDC. Could you let Betty Humphrey and myself know when you have the record IDs - we need to update the references in the main AKIS document.

Thanks a million!

Cheers, Cathy

The following can be turned into Records, to be referenced in our AKIS or AK Summaries...

1. TWCP-AK-2.1-002, R.2/IC1 Process AK Report for Chloride Operations at TA-55

2. TWCP-AK-2.1-003, R.2/IC1 Process AK Report for Metal Operations Processes at TA-55

3. TWCP-AK-2.1-004, R.2/IC2 Process AK Report for Miscellaneous Operations at TA-55

4. TWCP-AK-2.1-005, R.2/IC1 Process AK Report for Nitrate Operations at TA-55

5. TWCP-AK-2.1-006, R.2/IC1 Process AK Report for Pyrochemical Processes at TA-55

6. TWCP-AK-2.1-007, R.2/IC1 Process AK Report for Special Processing at TA-55

7. TWCP-AK-2.1-009, R.0/IC1 Process AK Report for Pu-238 Operations at TA-55

8. TWCP-AK-2.1-013, R.0 AK Report for NG Waste from Nitrate Operations at TA-55

9. TWCP-AK-2.1-014,R.0 AK Report for NG Waste from Miscellaneous Operations at TA-55

10. TWCP-AK-2.1-016,R.0 AK Report for NG Waste from Special Processing Operations at TA-55

11. TWCP-AK-2.1-017,R.0 AK Report for NG Waste from Metal/Pyrochemical Operations at TA-55

"The simplest questions are the hardest to answer."
Northrop Frye

Catherine H. Smith
Project 2010
RRES-CE Certification Group
Risk Reduction & Environmental Stewardship Division
Phone: 667-0113 Page: 664-7104

INTERIM CHANGE REQUEST

LA-UR-02-1709

☑ TWCP ☐ WRR ☐ Other If Other, please identify: _____	IC Number: 1
Person Requesting this Interim Change: Sandy Wander	
DOCUMENT INFORMATION	
Document Title: Process Acceptable Knowledge Report for Plutonium-238 Operations at TA-55	**Document No./Revision:** TWCP-AK-2.1-009,R.0 (LA-UR-02-1709)
Effective Date of Current Document: 08/07/01	**Document Preparer:** John Musgrave

CHANGE INFORMATION: Please ensure the following changes are made:

Section/Page	Change:	Reason/Justification:
TA-55 Process/ Status (P/S) Code Index / p. vi	Delete "summary" from "NOTE" at top of p. vi and from "*" note at bottom of p. vi Change 3rd column heading on page vi to read "Process AK Report" Delete entire 4th column	Clarification
RCRA Constituents/ EPA Hazardous Waste Numbers / p. viii	Add ASP, C1, WD, and WS to P/S codes in 3rd bullet	Report updated to add P/S codes that were not included. Typo error identified during review.
Global	Change all occurrences of "Sampling Plan" to "AK Information Summary"	Title change
Global	Delete "summary" from "Process AK summary report" and delete "Summary" from "Process Acceptable Knowledge Summary Report"	Clarification
Attach 3 / p. 1	Add "D008" to all timelines	Per SME, all P/S waste codes have potential to have leaded gloves. Timelines updated to reflect information.
	Delete "D006" and "D011" from R8 timeline	Per SME, concentrations below TCLP limits. Data available.
	Create C1 timeline with P/S code D008*,	
	Delete "D005 applies to salt waste" from WS timeline	Per SME, barium used in process was ultra high purity and feed barium was below TCLP limits in salt waste.
	Add the following footnote: "*Prior to 1987, leaded gloves were not segregated from combustible debris. Between 1987 and May 1992, they were segregated and discarded in the metal debris waste stream. Since May 1992, they have been routinely segregated and assigned to a leaded glove waste stream, still under the originating P/S code (TWCP-4166)."	Footnote added to clarify segregation of leaded gloves.

Attach 4 / pp. 1 and 2	In "EPA Codes" column, delete all text and insert "*D008" for rows ASP, GPHS, MTL, P1, R8, RC1, SCP, and WS. Add the following footnote to the table: "*D008 due to leaded gloves"	Updated report to reflect addition of leaded gloves to timelines and all P/S codes per SME. Per SME, Barium used in process was ultra high purity and below TCLP limits in salt waste.
Attach. 6	Add new Attachment 6 and update "Contents" page to reflect addition Add following paragraph to end of Section 2.0: "When discrepancies in AK information are discovered, they are documented and resolved in accordance with *Acceptable Knowledge Documentation* (TWCP-QP-1.1-021). The resulting documentation is found in Decision/Discrepancies Resolution Documentation (Attachment 6)."	New TWCP-QP-1.1-021 requirement

Date changes submitted: 02/12/02	**Desired effective date for changes:**

INTERIM CHANGE APPROVAL

Document Preparer: S Wander		Reviewer (if applicable): Facility Rep	
Signature: Sandy Wander	Date: 3/19/02	Signature: Wayne A Pringle	Date: 3/20/02
Site Project QA Officer: M A Gayeski		LAAO (if implementing WAP requirements): NA	
Signature: M A Gayeski	Date: 3/21/02	Signature:	Date:
☑ IC Approved ☐ Major Rev. ☐ Hold for next Rev.		Do changes affect WAP data collection, data quality, or performance criteria? ☐ Yes ☑ ~~No~~ If yes, date of CBFO approval: _____ (documentation attached)	
Site Project Mgr/Line Mgr: P Rogers			
Signature: Pamela Rogers	Date: 3/19/02		
USQ Screener (if applicable): NA			
Signature: [illegible]	Date: 3 25 02		

NOTE: Changes can be designated on the document and attached to this form.

Effective date for this interim change: 3/21/02

TA-55 PLUTONIUM FACILITY
ACCEPTABLE KNOWLEDGE REPORT

REPORT TITLE: Process Acceptable Knowledge Summary Report for Plutonium-238 Operations at TA-55

REPORT NUMBER: TWCP-AK-2.1-009,R.0 (LA-UR-01-4200)

WASTE GENERATED FROM PROCESS/STATUS CODES: ASP, GPHS, MTL, P1, R8, RCI, SCP, WS

EFFECTIVE DATE: 08/07/01

NEXT REVIEW DATE: 08/07/03

DOCUMENT PREPARER:

John Musgrave — 7/3/01
NAME — DATE

APPROVALS:

June Fabryka-Martin — 7/3/01
INDEPENDENT TECHNICAL REVIEWER/EDITOR — DATE

Mavis Lin — 7/18/01
SITE PROJECT MANAGER — DATE

Betty Humphrey — 7/19/01
WASTE CERTIFICATION OFFICIAL — DATE

[illegible] — 7/27/01
SITE PROJECT QA OFFICER — DATE

Andrew J. Montoya — 7-3-01
FACILITY REPRESENTATIVE — DATE

© 2001 University of California

HISTORY OF REVISIONS

Revision No.	Date	Pages Revised	Reason for Change
0	08/07/01	—	New report (TWCP-0xxxx)
0/IC1	03/21/02	vi, ix, Att. 3, Att. 4	Respond to audit comments

CONTENTS

Section **Page**

ACRONYMS iv

TA-55 PROCESS STATUS (P/S) CODE INDEX vi

PROCESS ACCEPTABLE KNOWLEDGE SUMMARY vii

1.0 INTRODUCTION 1

2.0 METHODOLOGY USED TO SEARCH FOR AK RECORDS 1

3.0 DESCRIPTION OF THE PROCESS WASTE 2
- 3.1 Facility and Mission 2
- 3.2 Basis, Rationale, and Assumptions Used to Delineate the Waste Streams 3
- 3.3 Waste Physical Form and Content Description 4
- 3.4 Waste Volume and Time Period of Waste Generation 4
- 3.5 Waste Generation Processes 5
- 3.6 Material Inputs to the Waste Generation Processes 16

4.0 ASSIGNMENT OF EPA HAZARDOUS WASTE NUMBERS 19
- 4.1 F, K, and P Listings 19
- 4.2 Toxicity Listings 20

5.0 VERIFICATION THAT IGNITABLE, REACTIVE, AND CORROSIVE WASTES WERE EXCLUDED 21

6.0 VERIFICATION THAT INCOMPATIBLE CHEMICALS WERE PROHIBITED 23

7.0 VERIFICATION THAT THERE ARE NO COMPRESSED GASES, FREE LIQUIDS, NONRADIONUCLIDE PYROPHORICS, SEALED CONTAINERS GREATER THAN FOUR LITERS IN VOLUME, OR >1% RADIONUCLIDE PYROPHORICS 23

8.0 VERIFICATION THAT THERE ARE NO POLYCHLORINATED BIPHENYLS (PCBs) IN THE WASTE STREAM 24

9.0 CITED PROCEDURES AND REQUIREMENTS DOCUMENTS 25

Table
- 1 Process Feed Materials for Pu-238 Operations 16
- 2 Average Isotopic Content of Pu-238 Material Types and Enrichments 18
- 3 Actinide Impurities in $^{238}PuO_2$ Fuel Lots for Cassini Program 19
- 4 Chemical Inputs to Processes Described in This Report 20
- 5 TCLP Concentrations (ppm) in Wastes from Pu-238 Operations 21

Attachments
- 1 Acceptable Knowledge Roadmap (11 pages)
- 2 LANL and TA-55 Site Maps (2 pages)
- 3 Timeline for Pu-238 Operations (2 pages)
- 4 Process Inputs and Outputs (2 pages)
- 5 Simplified Pu-238 Process Flow Diagrams (2 pages)
- 6 Decision/Discrepancies Resolution Documentation (2 pages)

ACRONYMS

AK	acceptable knowledge
AK Information Summary	*Los Alamos National Laboratory Transuranic Waste Characterization Acceptable Knowledge Information Summary* (TWCP-PLAN-0.2.7-001,R.5)
CFR	*Code of Federal Regulations*
CMR	Chemistry and Metallurgy Research [Facility]
D	EPA hazardous waste number prefix for wastes with hazardous characteristics, defined in 40 CFR Subpart C, Sections 261.21 to 261.24
DOE	U.S. Department of Energy
DOR	direct oxide reduction
DWLS	Discardable Waste Log Sheet
EP-60	type of inner shipping container
EPA	U.S. Environmental Protection Agency
F	EPA hazardous waste number prefix for hazardous wastes from non-specific sources, defined in 40 CFR Subpart D, Section 261.31
GPHS	General Purpose Heat Source
HF	hydrofluoric acid
HEPA	high-efficiency particulate air
HNO_3	nitric acid
HWN	[EPA] hazardous waste number
K	EPA hazardous waste number prefix for hazardous wastes from specific sources, defined in 40 CFR Subpart D, Section 261.32
LANL	Los Alamos National Laboratory
LWRHU	Lightweight Radioisotope Heater Unit
M	molar
MASS	Material Accountability and Safeguards System
$MgCl_2$	magnesium chloride
MgO	magnesium oxide
MSDS	material safety data sheet
MT	material type
MWG	Milliwatt Generator
NMT	Nuclear Materials Technology [Division]
P	EPA hazardous waste number prefix for acute hazardous waste defined in 40 CFR Subpart D, Section 261.33
P/S [code]	process/status [code]
PCB	polychorinated biphenyl
PF-4	Plutonium Facility, Building 4
Pu-238	plutonium-238
PuO_2	plutonium oxide
RCRA	Resource Conservation and Recovery Act
RFETS	Rocky Flats Environmental Technology Site
RLWTF	Radioactive Liquid Waste Treatment Facility
RMDC	Records Management/Document Control
SME	subject matter expert

SOP	standard operating procedure
SRS	Savannah River Site
TA	technical area
TCLP	Toxicity Characteristic Leaching Protocol
TRU	transuranic
TWCP	Transuranic Waste Certification/Characterization Project
UCNI	Unclassified Controlled Nuclear Information
UF/PF	ultrafiltration/polymer filtration
WAC	waste acceptance criteria
WIPP WAC	*Waste Acceptance Criteria for the Waste Isolation Pilot Plant* (DOE/WIPP-069)
WIPP WAP	Attachment B, Waste Analysis Plan, to the *Hazardous Waste Facility Permit Issued to the Waste Isolation Pilot Plant* (EPA No. NM4890139088)
WIPP	Waste Isolation Pilot Plant
WODF	Waste Origination and Disposition Form
WPRF	Waste Profile Request Form
μm	micron

TA-55 PROCESS/STATUS (P/S) CODE INDEX

NOTE: This index indicates the main process AK report and report section that covers each P/S code mentioned in this report.

P/S Code	P/S Name	Process AK Report*
ASP	Aqueous Scrap Processing	Plutonium-238 Operations
C1	Pu-238 Heat Source Calorimetry	Plutonium-238 Operations
CA	Casting	Metal Operation Processes
CF	Cement Fixation	Nitrate Operations
ED	Cascade Dissolver	Nitrate Operations
GPHS	General Purpose Heat Source Fabrication	Plutonium-238 Operations
HP	Cement Fixation	Nitrate Operations
ITF/ITF4	Impact Test Facility	Metal Operation Processes
MPD	Cascade Dissolver	Nitrate Operations
MTL	Metallography	Plutonium-238 Operations
OR	Direct Oxide Reduction	Pyrochemical Processes
P1	Routine Pu-238 Heat Source Production	Plutonium-238 Operations
PPD	Plutonium Pellet Dissolution	Special Processing
R8	Routine Pu-238 Solidification	Plutonium-238 Operations
R8	Recovery of Pu-238 from Sucrose Solutions	Plutonium-238 Operations
RCI	Recovery of Pu-238 from Contaminated Iridium	Plutonium-238 Operations
SC	Cascade Dissolver, G437	Nitrate Operations
SCP	Routine Pu-238 Scrap Processing	Plutonium-238 Operations
SP	Scrap Dissolution, G438	Nitrate Operations
TDC	Thermal Decomposition of Cellulose Items	Nitrate Operations
WD	Welding and Decon for GPHS	Plutonium-238 Operations
WM	Waste Management	Miscellaneous Operations
WS	Pu-238 Direct Oxide Reduction	Plutonium-238 Operations

* Process AK reports: Metal Operation Processes (TWCP-AK-2.1-003), Miscellaneous Operations (TWCP-AK-2.1-004), Nitrate Operations (TWCP-AK-2.1-005), Plutonium-238 Operations (this report), Pyrochemical Processes (TWCP-AK-2.1-006), and Special Processing (TWCP-AK-2.1-007)

PROCESS ACCEPTABLE KNOWLEDGE SUMMARY

Waste-generating process: Plutonium-238 processes

P/S codes: ASP, C1, GPHS, MTL, P1, PP, R8, RCI, SCP, WD, WS

Type of waste generated:

Retrievably stored and newly generated, mixed and non-mixed, combustible and non-combustible debris; mixed oil and vermiculite waste; mixed solidified inorganic process waste including leached solids, salts and metal oxides.

Site: LANL

Facility Mission (including defense and non-defense programs):

TA-55 has extensive capabilities for the extraction and recovery of plutonium from residues and scraps generated from operations at various LANL facilities and other DOE sites in the defense complex. The recovered plutonium is converted into pure plutonium feedstock. These manufacturing and recovery operations, associated maintenance operations, and TA-55 plutonium research are the sources of TRU-contaminated scrap, residues, and debris waste generated at TA-55. The scrap and residues are processed to recover as much plutonium as practicable before disposal. Wastes are generated from plutonium recovery and purification for defense programs. These wastes may have been generated in the same rooms and gloveboxes as were used for non-defense activities, and were not segregated from non-defense waste until August 27, 1998.

Area(s) or building(s) where the process waste was generated (including operations carried out in those areas):

In the 200 Wing of the TA-55 Plutonium Facility (Building PF-4), Rooms 201, 204, 205, 206, and 207 have been used exclusively for Pu-238 processes. Plutonium-238 operations include chemical and radiochemical analysis, process tests and development, plutonium research, and heat source fabrication as well as recovery of Pu-238 from scrap and residues produced by numerous feeds.

Description of the process waste (physical form and typical content description):

Waste from Pu-238 operations consists primarily of debris waste, including cellulose-based waste, plastic-based waste, rubber, metal debris, glass debris, HEPA filters, and steel packaging materials. Other Pu-238 waste includes oil and vermiculite waste and solidified inorganic process waste including leached solids, salts and metal oxides. Liquid waste is sent to the Radioactive Liquid Waste Treatment Facility (RLWTF) at TA-50.

Summary Categories: S3000, S5000

Waste Matrix Codes: S3100, S3200, S5000, S5100, S5410

Description of the waste-generating process:

The overall goal of the Pu-238 processes is to produce heat sources for various applications. Limited recovery of plutonium from metal, metal alloys, scrap, and residues is also part of Pu-238 processing operations.

Process Input:

Plutonium metal and oxides; pyrochemical salts; ash; analytical laboratory solutions; and residues from other DOE facilities.

Radioisotopic content of the waste:

Pu-238 material types with well-defined isotopic compositions. U-234 is often present as a decay product of its plutonium precursor. Less common radionuclides present as trace-level contaminants are Am-241, Am-243, Cs-137, Np-237, Th-232, U-235 and U-238.

RCRA Constituents/EPA Hazardous Waste Numbers:

- D007 (chromium), D008 (lead), and D009 (mercury) apply to waste from P/S code R8.
- D008 (lead) applies to debris waste from all P/S codes from Pu-238 operations for discarded leaded gloves.
- No other D codes apply to waste generated by P/S codes ASP, C1, WD, WS GPHS, MTL, P1, RCI, or SCP.
- No F, K or P codes apply to any of the P/S codes under Pu-238 operations.

Process waste volume (if known):

Waste volumes for each P/S code have not been tracked. Instead, waste items are segregated into similar material types and packaged in waste containers. Waste containers are segregated into waste streams in the AK Information Summary, and waste stream volumes are reported in that document.

Years of generation for the process waste: 1978–present

PROCESS ACCEPTABLE KNOWLEDGE REPORT FOR PLUTONIUM-238 OPERATIONS AT TA-55

1.0 INTRODUCTION

All transuranic (TRU) waste must be sufficiently characterized and certified before it is shipped to the Waste Isolation Pilot Plant (WIPP). The U.S. Environmental Protection Agency (EPA) allows use of acceptable knowledge (AK) for waste characterization. EPA uses the term AK in its guidance document, *Waste Analysis at Facilities that Generate, Treat, Store and Dispose of Hazardous Waste.* Attachment B, Waste Analysis Plan, to the *Hazardous Waste Facility Permit Issued to the Waste Isolation Pilot Plant* (EPA No. NM4890139088) (WIPP WAP) defines AK and provides guidelines on how AK should be obtained and documented.

This process AK report was prepared in accordance with *Acceptable Knowledge Documentation* (TWCP-QP-1.1-021). The primary purpose of this report is to systematically organize, evaluate, and summarize detailed AK information about individual processes that generate TRU waste in the Plutonium Facility at Technical Area (TA) 55, one of the TRU-waste generators at Los Alamos National Laboratory (LANL). By doing so, this report provides detailed technical support for one or more waste stream AK summary reports which include these process wastes, such as the *Acceptable Knowledge Report for Waste Streams TA-55-43, TA-55-44, TA-55-45, TA-55-46 and TA-55-47* (TWCP-AK-2.1-011).

2.0 METHODOLOGY USED TO SEARCH FOR AK RECORDS

The AK search for the information related to TA-55 waste streams resulting from Pu-238 processes and Pu-238 heat source fabrication covered:

- Review of the *Los Alamos National Laboratory Transuranic Waste Characterization Acceptable Knowledge Information Summary* (TWCP-PLAN-0.2.7-001) (AK Information Summary) that includes information regarding all TRU waste streams
- Review of documents related to waste generation and waste management activities at TA-55 as listed on the Acceptable Knowledge Roadmap (Attachment 1)
- Interviews with personnel involved with waste generation and waste management at TA-55 as listed on the Acceptable Knowledge Roadmap (Attachment 1)
- Analyses of individual processes generating waste, and evaluations of the potential for Resource Conservation and Recovery Act (RCRA)-regulated constituents to be present in the process wastes, based on subject matter expert (SME) interviews and any relevant data

NOTE: Much of the AK information related to Pu-238 processes is contained in Transuranic Waste Characterization/Certification Project (TWCP) Record No.

TWCP-3545. Individual documents in this record have been assigned a separate identifier, P238-nn, where nn is a sequential 1- or 2-digit number. This referencing nomenclature is used throughout this report and its attachments.

The TWCP Records Management/Document Control (RMDC) Center contains copies of the documents referenced in this report. Any Unclassified Controlled Nuclear Information (UCNI) is contained in these records, and is not included in this report. Such records are identified as UCNI in the Acceptable Knowledge Roadmap (Attachment 1).

This process AK report contains information on 11 individual processes that have each been assigned a unique identifier called a process status (P/S) code. The search and compilation of AK information was based on P/S code, because that is the greatest level of process detail recorded in waste generation records.

The TA-55 Plutonium Facility tracks waste items both by the process from which they originated and their material content. Waste items are labeled with an item identification code that contains information on the waste material parameter of the item and an embedded P/S code that corresponds to the process that produced the waste item. Waste items are packaged into waste containers based on the material content of the waste, without regard to P/S code. This practice complicates AK tracking because a single waste container can include waste items from several P/S codes. Further complication is introduced because the waste streams for TA-55 have been defined based primarily on the physical form and material content of the waste and only secondarily on the waste generation process through mixed or non-mixed waste stream designations. Hence, any given Pu-238 waste stream could potentially contain items from all of the plutonium Pu-238 processes that were active at TA-55 over the time span of the generation of the waste stream.

We have attempted to mitigate confusion resulting from these two different ways of categorizing TA-55 waste (by process of generation and P/S code or by material content and waste stream number) by providing separate AK reports for each categorization method (i.e., process AK reports for process areas, and AK summary reports for waste streams). The AK information search was performed based on the processes used at TA-55 and tracked by the P/S codes, and it is summarized in this process AK report.

When discrepancies in AK information are discovered, they are documented and resolved in accordance with *Acceptable Knowledge Documentation* (TWCP-QP-1.1-021). The resulting documentation is found in Decision/Discrepancies Resolution Documentation (Attachment 6).

3.0 DESCRIPTION OF THE PROCESS WASTE

The following sections describe Pu-238 processes, and identify the resulting wastes as well as outputs that are sent to other Pu-238 operations for further processing.

3.1 Facility and Mission

The TA-55 Plutonium Facility (Building PF-4) recovers plutonium from scrap and residues generated throughout the U.S. Department of Energy (DOE) defense complex, and processes it into pure plutonium oxide for conversion to metal and other products. The contaminated scrap and residues, if containing plutonium above the discard limit, are processed to recover as much plutonium as is practical (TWCP-351, TWCP-352). TA-55 has extensive capabilities for the extraction and recovery of plutonium-239 from residues and scraps generated from operations at various LANL facilities and other Department of Energy (DOE) sites and is establishing similar recovery capabilities for Pu-238 (TWCP-3545/P238-01). These recovery operations, associated maintenance operations, manufacturing operations, and plutonium research are the sources of TRU waste generated at TA-55. Detailed information about the TA-55 plutonium recovery processes can be found in *Waste from Plutonium Conversion and Scrap Recovery Operations* (TWCP-352). Information specific to Pu-238 processes is provided in TWCP-415. A full-block flow diagram for plutonium processing and waste management at TA-55 is given in reference TWCP-886.

A LANL site map and a detailed map of the buildings at TA-55, including Building PF-4, are shown in Attachment 2. In the 200 Wing of Building PF-4, Rooms 201, 204, 205, 206, and 207 are used exclusively for Pu-238 processes (TWCP-3545/P238-01). The Pu-238 processes include recovery operations and heat source fabrication processes. The latter processes include fuel fabrication, pellet production, and scrap/process residues processing.

The Pu-238 processing activities were strictly segregated from all other Pu-processing activities at TA-55 because cross-contamination of the materials would adversely affect the quality and usability of the end products (TWCP-1037). The Pu-238 operations consisted of activities supporting both defense and non-defense applications. However, wastes from various processes were not segregated by funding source, waste-generating process, or waste-generating location (e.g., room or glovebox) until recently (August 27, 1998), but rather were segregated and packaged based on waste type (TWCP-887, TWCP-4162, TWCP-4167). Consequently, a single waste container often contains wastes from multiple processes. Some debris waste was also co-mingled with room trash related to these same operations (both defense and non-defense), and was initially boxed as low-level waste. Subsequently, some of these waste boxes were returned for disposal in drums as TRU waste when on-site radioassay results showed them exceeding the low-level waste threshold value (TWCP-816).

3.2 Basis, Rationale, and Assumptions Used to Delineate the Waste Stream(s)

The basis for delineation of TA-55 waste streams was established by the evolving set of LANL and TA-55 waste management plans and site-specific procedures, which date back to the start of operations at the Plutonium Facility in 1978 (TWCP-352, TWCP-697, TWCP-700, TWCP-701, TWCP-3943). The stated

guidance and practice from the beginning, continuing to the present day, has been to handle and package all combustible and noncombustible debris waste in a similar fashion, regardless of the process (i.e., P/S code) of origin. Inspection, collection, documentation and packaging operations of solid, certifiable TRU wastes at TA-55 are conducted in PF-4 by a waste management section or team (TWCP-352, TWCP-700, TWCP-701, TWCP-3943). Wastes from all TRU waste-generating activities at TA-55 are handled and packaged into waste containers by this team based on the material content of the waste, without regard to P/S code. Materials are considered waste only when they have been received and processed by the waste management team.

Assignment of a particular waste container to a waste stream is then made on the basis of waste generator information compiled in the AK Information Summary. Waste generator information is reviewed to identify the types and sources of waste items present in each drum, to evaluate the most appropriate waste summary group, waste matrix code, and potential for the presence of hazardous constituents. In the AK Information Summary, TA-55 wastes have been assigned to waste streams based on the waste segregation schemes used by TA-55:

- By radioisotope content (Pu-238 or Pu-239 material type) (TWCP-934)
- By material matrix (combustible, noncombustible, metal, glass, etc. waste types)
- By hazardous waste status (mixed, non-mixed, or special case waste streams)

3.3 Waste Physical Form and Content Description

Wastes generated by Pu-238 operations include ^{238}Pu-contaminated debris waste, high-efficiency particulate air (HEPA) filters, filter cake, salts, and wastes entered into the cement fixation process or sent to the Radioactive Liquid Waste Treatment Facility (RLWTF) at TA-50. Detailed information regarding the generation process, characterization, and disposal of these wastes is provided in Section 3.5 of this report.

The debris waste includes the following categories:

- Cellulose (e.g., paper, cheesecloth, cellulosic personnel protective equipment)
- Plastic (e.g., gloves, tape)
- Rubber (e.g., tubing, leaded gloves)
- Metal (e.g., wire, tools, process equipment)
- Glass (e.g., labware)
- Filters (HEPA)
- Graphite
- Ceramic
- Calcined hydroxide precipitation cakes
- Pyrochemical salts

3.4 Waste Volume and Time Period of Waste Generation

The period of generation of the Pu-238 wastes is from 1978 until the present. The P/S codes, their time periods of generation, and corresponding EPA HWNs are shown graphically in Attachment 3, Timeline for Pu-238 Operations.

Waste volumes for individual P/S codes are not tracked. Instead, waste items are segregated into similar material types and packaged into containers. Waste containers are assigned to waste streams in the AK Information Summary, and waste stream volumes are reported in that document, and in the associated AK summary reports (e.g., *Acceptable Knowledge Report for Waste Streams TA-55-43, TA-55-44, TA-55-45, TA-55-46 and TA-55-47* [TWCP-AK-2.1-011]).

3.5 Waste Generation Processes

The Pu-238 for all heat source fabrication processes was produced, separated, and purified at the Savannah River Site (SRS). SRS information indicates that no RCRA-listed chemicals were used in the purification process and that the purified Pu-238 contains no RCRA constituents (TWCP-1044). The Pu-238 processes at TA-55 use no organic solvents. Also, the oxide feed materials do not contain any organic solvents. If the oxides did contain organic solvents, the latter would be boiled off or destroyed by the high temperatures used in the fabrication processes.

Pu-238 processing operations involve several different processes. The processes and P/S codes applicable to Pu-238 operations are listed below:

- P/S code ASP Aqueous Scrap Processing
- P/S code C1 Pu-238 Heat Source Calorimetry
- P/S code GPHS General Purpose Heat Source Fabrication
- P/S code MTL Metallography
- P/S code P1 Routine Pu-238 Heat Source Production
- P/S code PP Pellet Production for GPHS
- P/S code PPD Plutonium Pellet Dissolution
- P/S code R8 Pu-238 Sucrose Solutions and Waste Solidification
- P/S code RCI Recovery of $^{238}PuO_2$ (plutonium oxide) from Contaminated Iridium
- P/S code SCP Routine Scrap Processing
- P/S code WD Welding and Decontamination for GPHS
- P/S code WS Pu-238 Direct Oxide Reduction

Each of these processes is described below in detail. Timelines for these processes are shown in Attachment 3. A complete listing of P/S codes for Pu-238

operations, their descriptions, feed materials, and inputs and outputs is found in Attachment 4. Simplified process flow diagrams for Pu-238 operations are found in Attachment 5.

Wastes from P/S code PPD, which involved the dissolution of Pu-238 pellets in Room 209, were packaged with Pu-238 wastes. This P/S code is described in the *Process AK Report for Special Processing* (TWCP-AK-2.1-007). In addition, ash from P/S code TDC was packaged with other Pu-238 wastes when combustible material from Pu-238 processes were ashed under this activity. P/S code TDC is discussed in the *Process AK Report for Nitrate Operations* (TWCP-AK-2.1-005).

3.5.1 Aqueous Scrap Processing (P/S code ASP)

P/S code ASP is a new activity that covers work involved in the purification of solid $^{238}PuO_2$ in a nitric acid stream (TWCP-5600), similar to the recovery activities already established for Pu-239 as part of TA-55 nitrate operations (e.g., P/S codes ED, MPD, SC and SP described in Section 3.5.2 of TWCP-AK-2.1-005,R.2). A flow chart showing the Pu-238 Aqueous Scrap Recovery Process (P/S code ASP) is shown in Attachment 5.

During comminution, the weighed Pu-238 solid is ground to a particle size < 5 μm. After the comminution, all or a portion of the ground material is put into a dissolution vessel.

The ^{238}Pu solid is dissolved in a mixture of refluxing concentrated nitric acid (HNO_3) and hydrofluoric acid (HF) for up to 8 hours. After dissolution is performed, the ^{238}Pu-rich solution is filtered through a 5-μm teflon membrane. The used teflon membrane is stored in a stainless steel can. A portion of the filtrate may be processed through ion exchange, or the entire filtrate may be treated for oxalate precipitation.

Oxalate precipitation involves an acid adjustment of the filtrate to 1-2 M HNO_3, while the solution is continuously stirred using the mechanical stir bar. Urea is added to scavenge nitrite salt that could interfere with further chemical pretreatment. Hydroxylamine nitrate is added to adjust the valence of the plutonium to (III). Oxalic acid is added to form a Pu-oxalate precipitate. The precipitate is filtered, and calcination converts the Pu-238-oxalate to $^{238}PuO_2$ product. The solid product is cooled, weighed, and stored.

The dissolution Pu-238-filtrate destined for ion exchange may undergo an aluminum nitrate treatment. The dissolution Pu-238-filtrate is added to aluminum nitrate dissolved in dilute nitric acid, followed by a filtration step to collect any formed solids. (Typically, the aluminum nitrate treatment is not performed.) The filtrate then undergoes a pretreatment involving urea, sodium nitrite, and ferrous salt prior to ion

exchange. The Pu-rich eluate is collected and undergoes oxalate precipitation as described above. The Pu-lean effluent, which contains impurity metal ions, as well as the aluminum from the aluminum nitrate treatment, is neutralized to pH 10-12 with sodium hydroxide. Under these neutralization conditions, the majority of the impurity ions and Pu-238 (not precipitated as an oxalate precipitate) will precipitate as metal hydroxides.

The hydroxide precipitate is calcined then stored, and the hydroxide filtrate is sampled to determine the radioactivity level. If above the discard limit, the hydroxide filtrates are transferred to the residue solidification process (P/S code R8). In this process, any soluble Pu-238 is recovered with ferric nitrate and sodium hydroxide, and the filtrate resulting from the solidification process is sent to the TA-50 RLWTF through the caustic waste line.

The Pu-238 in the hydroxide filtrates can also be recovered by a ultrafiltration/ polymer filtration (UF/PF) process operated by NMT-11 personnel.

The $^{238}PuO_2$ product is sent to P/S code P1. The hydroxide cakes are stored either in the vault or in the glovebox line under P/S codes MM or ASP.

3.5.2 Heat Source Fabrication (P/S codes GPHS and P1)

Pu-238 heat sources that are routinely fabricated at TA-55 include the General Purpose Heat Source (GPHS, produced under the P/S code with the same name), Lightweight Radioisotope Heater Unit (LWRHU), and Milliwatt Generator (MWG) Program. The latter two heat sources are produced under P/S code P1. Heat source production involves fuel fabrication, pellet production, and scrap and process residues processing. Each of these is a separate operation, using different materials and generating different types of waste; therefore, they are addressed individually. Debris waste containing lead gloves may be generated by any of these processes. This waste is segregated from non-lead debris waste and disposed as RCRA-regulated TRU waste (TWCP-3545/P238-02).

Fuel Fabrication

The fuel fabrication process occurs in Room 207. The feed material for fuel fabrication is $^{238}PuO_2$ from SRS. The SRS has been directly or indirectly the source of all feed material for fuel fabrication (TWCP-3545/P238-01). The material physically resides in the TA-55 vault or in Pu-238 heat source calorimetry operations (P/S code C1, does not generate TRU waste) before being introduced into the fabrication

process. This material goes through the physical processes of weighing, splitting, ball milling, slugging and screening, and granule seasoning. The material also undergoes oxygen isotopic exchange, in which oxygen-17 and oxygen-18 are replaced by oxygen-16 as the material is heated to 775 °C. In GPHS and LWRHU processing, oxygen exchange is followed by heating to 1000 °C to release alpha-decay helium from the PuO_2 crystal structure. GPHS and LWRHU season a portion of the granules at 1600 °C and a second portion at 1100 °C. The latter two processes ultimately hot press the pellets at 1530 °C and later heat treat the pellets at 1000 °C and finally at 1527 °C. By contrast, the MWG processing scheme seasons all the granules at 1600 °C, then mixes the PuO_2 with powdered yttrium metal and heats it at 1350 °C to form a sub-stoichiometric plutonium oxide. In all cases, the high temperatures ensure that any organic material that might have been present in the initial feedstock would not carry through to the final product.

No RCRA-regulated solvents or metals are introduced to the process, and all waste generated from the fuel fabrication process is nonmixed waste. The residues and products from this process feed into other Pu-238 processing operations (e.g., pellet production and scrap and process residues processing). (TWCP-3545/P238-03)

During the fuel fabrication process, analytical samples are frequently required for both $^{238}PuO_2$ feed material and product specimens either to characterize the material or to determine whether the material meets current production specifications (TWCP-3545/P238-04). The sampling occurs in Room 207. The sampling points are identified in the P1 Fuel Fabrication flow diagram (TWCP-3545/P238-03). All spatulas are stainless steel and the containers used to transfer or store the samples are stainless steel, tantalum, or glass. The primary capsule is cleaned in an ultrasonic cleaner with ethanol and allowed to air-dry (TWCP-3545/P238-04). This spent ethanol is not TRU waste. Sampling tools are wiped down with cheesecloth containing ethanol, resulting in cloth contaminated with ethanol and possibly a small amount of Pu-238 (TWCP-3545/P238-05). However, the ethanol on the cheesecloth would have been used up in the wipe-down process (TWCP-3545/P238-01). Thus, TRU waste generated from sampling operations includes Pu-238-contaminated debris consisting of cheesecloth (ethanol would have been used up in the process), stainless steel spatulas and containers, glass and tantalum capsules, and plastic secondary capsules.

A sample from the fuel fabrication process is taken to perform particle size analysis on $^{238}PuO_2$. This analysis is conducted in Rooms 201 and 206. Ethylene glycol is used to suspend the $^{238}PuO_2$ powder. Cleaning solutions containing water, soap, and Fantastik are used to clean the external surfaces of the sample cuvettes. These are the only chemicals

used in this analytical process and do not constitute RCRA-regulated waste. (TWCP-3545/P238-06)

The sample is placed into a disposable polystyrene cuvette containing a magnetic stir bar and 2 milliliters (mL) ethylene glycol. The cuvette is sealed with a polystyrene cap coated with Duco cement. After the glue has set, the cuvette is ultrasonically cleaned in a water bath containing a high-purity soap (e.g., Alconox), is cleaned a second time in a bath of distilled water, and is wiped down with a cheesecloth pad soaked in Fantastik cleaning solution. The cuvette is then transferred to another hood for final decontamination with Fantastik-soaked cheesecloth (TWCP-3545/P238-06). This process of cleaning and transferring the cuvette occurred up to 1994. From early 1994 onward, the water bath does not contain soap and Fantastik is not used because all work is performed in the same glovebox line and there is no need to decontaminate the cuvette. Before 1994, if the water was radioactively contaminated, it was discarded to the RLWTF. From 1994 onward, the water has been evaporated. (TWCP-3545/P238-20)

Upon completion of the analysis, the ethylene glycol containing the $^{238}PuO_2$ is poured through a coarse sieve and collected in a polyethylene bottle. When 200 - 500 mL of ethylene glycol has accumulated in the bottle, the contents are poured through a filter. The residue and filter paper are allowed to dry and are sent to a plutonium recovery process. The contaminated ethylene glycol is collected until a sufficient amount is available to discard, and then it is poured onto a bed of vermiculite for absorption. The resulting waste is nonmixed, solid TRU waste. The magnetic stir bars and cuvette caps are reused. The debris waste generated by this process would include ^{238}Pu-contaminated cheesecloth, polystyrene cuvettes, polyethylene bottles, and routine laboratory trash. (TWCP-3545/P238-06)

Pellet Production

The feed material for the pellet production process consists of $^{238}PuO_2$ from fuel fabrication. This material undergoes the physical processes of screening and weighing, die loading, hot pressing, sintering, and dimensioning. The product is sent to the vault and any residues are sent to the scrap and process residues processing operation. No solvents or metals are introduced in this process; therefore, any waste generated is nonmixed TRU debris waste. (TWCP-3545/P238-07)

Decontamination

A solution of nitric and hydrofluoric acid is used for decontaminating the fuel clads. The clad heat sources are immersed in the solution a minimum of three times to allow the acids to dissolve any PuO_2 particles

on the clad surface. Each time, the heat sources are removed from the acid solution and placed on a rag dampened with water. A rubbing action removes contamination while the heat of the source causes the acid solution and water on the rag to evaporate at a fairly rapid rate. The TRU acid solutions generated by the decontamination steps are neutralized to precipitate plutonium, and the filtrate is discarded into the caustic waste line to the RLWTF at TA-50. The plutonium precipitate is discarded if they meet the DL. The only other process chemical, UCAR C-34, is an epoxy for sealing the graphite aeroshell of the LWRHU heat source assembly. The epoxy is not RCRA-regulated (TWCP-1027).

Scrap and Process Residues Processing

The scrap and process residues processing operation receives materials from the vault and various other processes, such as fuel fabrication, pellet production, calorimetry, and metallography. This is a physical process consisting of weighing, sorting, segregating, and loading into a shipping container. The product from this process either goes to the vault or feeds into calorimetry operations (P/S code C1, which does not generate any TRU waste). No solvents or metals are introduced into this process. Therefore, the waste generated is nonmixed TRU debris contaminated with ^{238}Pu. (TWCP-3545/P238-08)

3.5.3 Metallography (P/S code MTL)

The metallography process in Room 201 began in 1992 and is still active. It receives feed material from P/S code P1 processes in the form of $^{238}PuO_2$ fuel recovered from encapsulated heat sources, impacted heat sources, fuel pellets, or other sources. The metallography process is a physical process involving cutting, mounting, grinding, polishing, photography, and etching (TWCP-3545/P238-09). No oils are used in any of these operations. Although chemicals are used to mount and etch the $^{238}PuO_2$, this process only generates ^{238}Pu-contaminated debris waste (TWCP-3545/P238-10).

An epoxy-based mounting resin, hardener, and mount filler is used to mount the $^{238}PuO_2$ (TWCP-3545/P238-10). The epoxy resin, hardener, and mount filler consist of diethylenetriamine, Epon® Resin 8132, and a citofix/durofix liquid. Epon® Resin 8132 is a liquid that polymerizes when mixed with an amine (e.g., diethylenetriamine). The citofix/durofix liquid is also a polymer. These chemicals harden (polymerize) upon use and are not a hazardous waste. (TWCP-3545/P238-20)

One end of a phenolic ring is covered with aluminum tape. The $^{238}PuO_2$ sample is placed in the center of the interior surface of the tape. The mixture of epoxy resin, hardener, and filler is poured into the mount

ring. The mounted sample is placed in a small aluminum film can, which is placed in a pressure bomb. The bomb is pressurized for a minimum of 10 hours, then vented, and the sample is removed. The mounted $^{238}PuO_2$ sample then undergoes grinding and polishing. (TWCP-3545/P238-10)

Manual grinding and polishing involves moving the mounted sample across wet silicon carbide grinding papers of varying grits that are laid over a glass plate. Between each grinding step and after the last grinding step, the sample is ultrasonically cleaned in distilled water. The mounted sample is polished using aqueous suspensions of aluminum oxide or diamond. After polishing, the sample is cleaned in distilled water. Automated grinding and polishing involves using programmable equipment. The grinding process uses a metal or cloth platen that has been coated with an abrasive slurry. This process also involves cleaning the polished sample in distilled water. (TWCP-3545/P238-10)

Whenever there is a requirement to examine and/or document the $^{238}PuO_2$ grain boundaries, the surface of the polished sample is etched using a solution consisting of 93% hydrobromic acid, 5% hydrochloric acid, and 2% hydrofluoric acid. The etching solution is made up on an as-needed basis and only in quantities less than 100 mL. The etching solution applied to the sample surface readily dries and must be replenished; therefore, there will not be any excess etching solution contaminated with ^{238}Pu that would be considered waste. Upon completion of etching, the sample is rinsed with distilled water and allowed to dry. (TWCP-3545/P238-10)

Residues from the metallography process feed into the P/S code P1 process. Before 1994, the $^{238}PuO_2$ was physically removed from the plastic mount (no solvent or chemical was used), and the mount was bagged out with other plastic debris. The $^{238}PuO_2$ sample removed from the mount is sent to the P1 scrap and process residue processing operation for plutonium recovery (TWCP-3545/P238-09). However, since 1994, the $^{238}PuO_2$ has been left on the mount and archived (stored) in the glovebox line. (TWCP-3545/P238-20)

The waste generated from the metallography process includes aluminum tape, grinding papers and polishing cloths, aqueous abrasive slurries, acid etching solutions, and aqueous washing and cleaning solutions. All of these wastes are nonmixed, ^{238}Pu-contaminated wastes. The grinding papers and polishing cloths are dried and discarded as debris waste, as is the aluminum tape. The aqueous abrasive slurries, which are not RCRA-regulated, are feed material for the ^{238}Pu waste solidification process (P/S code R8). Any etching solution remaining on the $^{238}PuO_2$ sample is rinsed off using distilled water and is collected with the aqueous wash solutions. These solutions, which are not RCRA-regulated, are also sent

to the waste solidification process (P/S code R8). Any excess etching solution, which is a corrosive liquid, would not be contaminated with ^{238}Pu and, therefore, is not TRU waste. (TWCP-3545/P238-10)

The metallography process may generate debris waste containing lead (e.g., gloves). This waste is segregated from non-lead debris waste and discarded as RCRA-regulated TRU waste (TWCP-3545/P238-02).

3.5.4 Routine Scrap Processing (P/S code SCP)

The scrap processing operation, which occurred from 1988 to 1996, received its feed material ($^{238}PuO_2$) from calorimetry operations (P/S code C1), heat source operations (P/S codes P1 and GPHS), and the vault. The feed material did not contain any hazardous constituents. The scrap processing operation took place in Room 204, and was a physical process that involved opening, weighing, sorting, and segregating the $^{238}PuO_2$ that arrived in a stainless steel inner shipping container (EP-60). The $^{238}PuO_2$ was then transferred into an outer shipping container (EP-61) and sent to the calorimetry process, and then to the vault. (TWCP-3545/P238-11)

No solvents or metals were introduced into the process; therefore, the only waste generated is solid debris waste (TWCP-3545/P238-12). Any debris waste containing lead (e.g., gloves) was segregated from non-lead debris waste and discarded as RCRA-regulated TRU waste (TWCP-3545/P238-02). The types of materials in the debris waste include cheesecloth pads and metal tools and equipment (TWCP-3545/P238-12).

3.5.5 Recovery of $^{238}PuO_2$ from Contaminated Iridium (P/S code RCI)

The process of recovering $^{238}PuO_2$ from contaminated iridium occurred from 1990 to 1992 in Room 201 (TWCP-3545/P238-13). The feed material for this process came from metal items in the iridium inventory in Building PF-4 or in the Chemistry and Metallurgy Research (CMR) Facility at TA-3. This process used both molten magnesium chloride ($MgCl_2$) and electrochemical dissolution to remove ^{238}Pu from iridium. (TWCP-3545/P238-14)

The first step in this process involved immersing the $^{238}PuO_2$-contaminated iridium metal in molten $MgCl_2$. The $MgCl_2$ was placed into a magnesium oxide (MgO) crucible and heated above its melting point. The same salt was used for subsequent runs until it had lost its effectiveness. The iridium shells were placed into a tantalum basket and immersed in the molten $MgCl_2$. At the end of the treatment, the iridium metal was removed from the molten $MgCl_2$, and the salt coating on the metal was removed with a water wash. This water wash was sent to the ^{238}Pu solidification process (P/S code R8) (TWCP-3545/P238-20). The

expended $MgCl_2$ and MgO crucible were bagged out and assayed before being discarded as ^{238}Pu-contaminated TRU solid waste. The iridium metal was sent to the vault unless additional treatment was necessary. If further treatment was required, the iridium metal underwent electrochemical dissolution. (TWCP-3545/P238-13)

The electrolyte solution consisted of a dilute mineral acid (nitric acid, hydrochloric acid, or sulfuric acid [TWCP-3545/P238-21]) with optional salt. The iridium metal was immersed in the solution, and a current was passed between the iridium metal and a reference electrode (composed of graphite [TWCP-3545/P238-21]). At the end of the run, the iridium metal was washed with water and allowed to dry. The clean iridium metal was sent to the vault (TWCP-3545/P238-15). No solvents or toxic metals were introduced into this process (TWCP-3545/P238-21).

The waste generated from the recovery process includes solid TRU debris waste, such as $MgCl_2$ salt, MgO crucibles, tantalum and stainless steel cans, and routine laboratory trash. Any debris waste containing lead (e.g., gloves) was segregated from non-lead debris waste and discarded as RCRA-regulated TRU waste (TWCP-3545/P238-02). The spent electrolyte solution, which was acidic and contaminated with small amounts of iridium and ^{238}Pu, and the water wash were sent to the ^{238}Pu solidification process (P/S code R8) (TWCP-3545/P238-20).

3.5.6 Routine ^{238}Pu Waste Solidification (P/S code R8)

The process of solidifying ^{238}Pu in waste solutions has been conducted since 1978 in Room 206 and is still active. The feed material for this process comes from analytical operations (LANL groups CHM-1 and CLS-1), ^{238}Pu heat source fabrication operations, metallography operations, and ^{238}Pu decontamination operations (TWCP-3545/P238-16, 17, 18). The feed solutions are strongly acidic, contain heavy metals (TWCP-3545/P238-18), and have ^{238}Pu concentrations orders of magnitude above the discard limit for radioactive waste solutions. The solidification process uses sodium hydroxide, ferric nitrate [$Fe(NO_3)_3 \cdot 9H_2O$], and phenolphthalein (1%) in ethanol to precipitate the ^{238}Pu. (TWCP-3545/P238-16)

Ferric nitrate solids are dissolved into the feed solutions to act as a flocculant. Concentrated sodium hydroxide solution is then added to convert the acidic solutions into basic (caustic) solutions, and cause the ferric ions and the ^{238}Pu ions in the solutions to co-precipitate as hydroxides. The phenolphthalein solution is used to indicate when the solution is basic. After sedimentation and vacuum filtration, the liquid portion (filtrate) is sampled and alpha-assayed to determine the residual ^{238}Pu concentration. The sludge is heated (calcined), such that the hydroxides are converted into oxides for disposal. This procedure is

repeated as necessary for the filtrate until the ^{238}Pu concentration in the filtrate is below the discard limit. (TWCP-3545/P238-16)

The waste generated by this process consists of calcined ferric oxide solids containing ^{238}Pu, a caustic solution containing ^{238}Pu below the discard limit, and solid debris. The oxide solids are sent to the vault or disposed as waste, depending on the ^{238}Pu concentration. The caustic solution is discarded into the caustic drain to the pretreatment plant at the RLWTF (TA-50, Building 1, Room 60). The solid debris waste consists of glassware, teflon, ceramic, stainless steel, tygon tubing, plastic, and paper.

The only potential sources of RCRA-regulated constituents in this process are the analytical solutions received as feed materials from LANL groups CHM-1, CLS-1, and other analytical chemistry groups. Nine ^{238}Pu solutions were stored in the vault at the time that this process was performed but none of these contained RCRA-regulated constituents, according to the coding remarks on the Material Accountability and Safeguards System (MASS) printouts. This absence of RCRA-regulated materials is consistent with the Waste Profile Request Form (WPRF) under which the solutions were received from LANL Groups CHM-1 and CLS-1. The WPRF was generated on 04/27/92 by T.K. Marshall and identifies corrosive acids and radioisotopes as being the only hazardous constituents in the solutions. No organic constituents were noted on the WPRF for these solutions. (TWCP-3545/P238-01)

The analytical techniques for ^{238}Pu solutions do not require the introduction of organic solvents or heavy metals into the solutions. In addition, the ^{238}Pu solutions returning from analytical chemistry are analyzed for heavy metals (totals) in a random fashion along with routine analyses for pH (or acid concentration) and radioactivity. Thus, between 1992 and 1997, 68 analyses were performed on 49 solutions returning from Group CLS-1, as follows: arsenic (4 analyses), barium (3), cadmium (4), chromium (24), lead (3), mercury (6), selenium (5), and silver (19). None of the analytical results for total metals (adjusted for the 20:1 dilution factor in accordance with Toxicity Characteristic Leaching Protocol [TCLP]) exceeded the RCRA regulatory level for the toxicity characteristic for the metals. Two of the results for mercury were inconclusive due to insufficient sensitivity in the analysis. (TWCP-3545/P238-01, 18)

The hydroxide ferroflocculation process conceivably could concentrate the heavy metals from the analytical solutions sufficiently to put them above the regulatory level for toxicity in the hydroxide cakes. Based on the concentration of metals in the feed waste stream (CLS-1 solutions)

and the chemistry involved in the solidification process, arsenic, barium, some chromium, and selenium will remain in the filtrate. Cadmium, lead, mercury, and silver will precipitate with the hydroxide cakes and will remain in the cakes during the calcination process. Since May 1991, the filtrate from this process has been analyzed for metals and all results have been below the RCRA regulatory limits.

Recent analytical information on Pu-238 hydroxide cakes that were calcined indicate that neither silver nor cadmium are present in concentrations large enough to be of concern. This is based on the fact that the primary source of these elements is as impurities in the plutonium oxide as supplied by SRS. Based on historical and present DLs for Pu-238 waste streams, if the Pu-238 concentrations are low enough to meet the DLs, silver and cadmium concentrations will readily occur at less than the TCLP limits for hazardous materials. Thus only chromium, lead, and mercury are present in concentrations in the calcined cake to require the use of the corresponding HWNs.

In addition, a review of nondestructive analysis results on hydroxide cakes revealed that the highest plutonium concentration in a set of calcined cakes was 7.4 weight percent Pu. Because the heavy metal contaminants are concentrated in the course of performing the hydroxide precipitation, contamination of other waste matices by the hydroxide cake is the most likely souce of RCRA levels of of the heavy metals in those waste streams. If the Pu content of the hydroxide cake is 7.4 weight percent and the maximum Pu allowed in a waste matrix other than hydroxide cake is 18.6 grams of Pu per kilogram of combustibles, then

The solid debris waste generated from this process is disposed as TRU solid, non-mixed waste. Any debris waste containing lead (e.g., leaded gloves) would have been discarded as mixed TRU waste to which EPA HWN D008 would be applicable (TWCP-3545/P238-02).

3.5.7 Recovery of ^{238}Pu from Sucrose Solutions (P/S code R8)

The recovery of ^{238}Pu from sucrose solutions, which occurred from 1978 to 1988, was performed in Room 206. The feed material for this process consisted of a 35% sucrose solution composed of sodium pyrophosphate, water, and sucrose. Sucrose solutions were used as a dispersive medium in particle size analysis of $^{238}PuO_2$; therefore, the feed solutions contained $^{238}PuO_2$. (TWCP-3545/P238-19)

The ^{238}Pu was recovered from these sucrose suspensions by filtering out the $^{238}PuO_2$ in a ceramic filter boat and evaporating the solution to dryness over low heat. The $^{238}PuO_2$ residue was scraped off the filter paper and calcined, then sent off-site for reprocessing. The residue from the evaporated solution was calcined and sent for discard if the ^{238}Pu

content was below the discard limit. If the residue was not discardable, it was sent to another location. (TWCP-3545/P238-19)

This recovery operation was a physical process. No solvents were introduced during the process or with the feed material. The wastes generated from this process consist of a calcined residue of sucrose and solid debris waste. The debris waste may contain stainless steel, ceramic, glassware, tygon tubing, and filter paper. All of the waste generated is solid TRU waste. Any laboratory debris waste containing lead (e.g., gloves) is segregated from non-lead debris waste and is discarded as RCRA-regulated TRU waste (TWCP-3545/P238-02).

3.5.8 Pu-238 Direct Oxide Reduction (P/S code WS)

P/S code WS was an activity that was performed in October 1998 and October 1999 (TWCP-5707). There are no current plans to perform this operation again but the code is still active. P/S code WS is a single cycle process that uses Direct Oxide Reduction (DOR) (described for P/S code OR in TWCP-AK-2.1-006,R.2). In this process, PuO_2 and calcium metal are reacted in molten calcium chloride ($CaCl_2$) to produce plutonium metal. The reaction is conducted in a magnesium oxide (MgO) crucible at 820°C to 875°C. Any arsenic, mercury or selenium present in the impure plutonium oxide would be driven off due to their volatility at this high temperature (TWCP-1258). The reaction proceeds to completion when excess calcium is present and when sufficient $CaCl_2$ is available to dissolve the calcium oxide (CaO) product.

After cooling, a plutonium metal button is removed by breaking the crucible. A layer of salt above the button contains unreacted oxide. All DOR salts are exposed to air to oxidize any pyrophoric metals that might be present. The salt is then either routed through aqueous recovery operations (P/S code ASP) to recover the plutonium, or else discarded as waste along with the remaining calcium metal, which has been converted to calcium oxide, and MgO crucible pieces.

3.6 Material Inputs to the Waste Generation Process

Attachment 4 lists P/S codes for Pu-238 operations at TA-55, including process descriptions, feed material, other process inputs, process outputs, and type of waste. The feed materials for Pu-238 operations consist of the general types of materials listed in Table 1 that are obtained either from the storage vault, as process output from other P/S codes, or from sources outside TA-55, including other DOE sites. The remainder of this section summarizes the nature of the process waste in terms of its physical, chemical and radioisotopic characteristics.

Table 1. Process Feed Materials for Pu-238 Operations

Feed Material	RCRA-Regulated Substances	P/S Codes in Pu-238 Operations
Analytical laboratory solutions	Potentially contaminated with RCRA-regulated heavy metals: chromium (D007), lead (D008), and mercury (D009	R8
Scrap oxide	Variable purity, no RCRA substances present	ASP
Iridium metal	Typically fairly pure, no RCRA substances present	RCI
Pu oxalates and hydroxides	Typically fairly pure, no RCRA substances present	ASP
Pu oxide	Incoming Pu-238 oxide from SRS exceeds regulatory limits for chromium (D007) and may exceed limits for cadmium (D006), lead D008) and silver (D011) for some fuel lots (TWCP-1025, TWCP-1026, TWCP-1030). However, calculations documented in TWCP-AK-2.1-011 support the conclusion that the levels of these metals in TA-55 waste streams from Pu-238 operations are below RCRA's regulatory limits.	ASP, GPHS, MTL, P1, SCP
Plutonium oxide	Typically fairly pure, no RCRA substances present	WS

3.6.1 Physical Waste Form Identification

Solid waste from Pu-238 operations primarily consists of debris waste and ferric oxide (derived from calcination of ferric hydroxide precipitates). Debris waste contains glassware, plastics, ceramic materials, cellulose-based personal protective equipment, paper, rags, HEPA filters, metal containers, brushes, and small tools. Leaded gloves may also be generated as process waste. Prior to May 1992, leaded gloves were discarded as metal debris and were not segregated from other metal wastes. Since that time, they have been routinely segregated from other metal debris waste and assigned EPA HWN D008. The ferric oxide is sent to the vault or discarded, depending on its ^{238}Pu content. In addition, caustic solutions from ferric hydroxide precipitation are discarded through the waste line to the RLWTF at TA-50.

Because items from several different processes are usually combined into individual waste drums, the physical waste form of each drum must be determined independently. This information is documented on a Waste Origination and Disposition Form (WODF) by the waste generator according to controlled procedures. The P/S code for each waste item is also documented on this form. In the packaging process, a standard form, the Discardable Waste Log Sheet (DWLS), was used to list each item identification number and record its matrix material. This form was signed by the waste packager, reviewed, and approved by quality assurance personnel.

3.6.2 Radionuclide Content Identification

The primary plutonium material type inputs for Pu-238 operations at TA-55 are listed in Table 2. The designation *material type* (MT) (e.g., MT 52) is used within the DOE Complex to describe the isotopic composition of common blends of radioactive materials used within the Complex. The material type notation was developed because it is a convenient way to describe material types that have very consistent isotopic compositions. Table 2 indicates the isotopic composition of the material types at the time the waste was characterized.

The material type provides the basis for estimating an upper bound for U-234, U-235, and Am-241 contents based on the rate of decay of their precursors, Pu-238, Pu-239 and Pu-241, respectively. The results of these calculations are also tabulated in Table 2, assuming (a) none of these isotopes were initially present in the material, (b) the oldest Pu material in inventory dates back to 1 January 1960, and (c) the waste was packaged on 1 January 1996, making it 36 years old (TWCP-698).

Table 2. Average Isotopic Content of Pu-238 Material Types and Enrichments

Material Type (MT)	Plutonium isotope and half-life (Weight %)						Upper limits for weight ratios		
	Pu-238 (87.74 yr)	Pu-239 (24120 yr)	Pu-240 (6564 yr)	Pu-241 (14.35 yr)	Pu-242 (376,300 yr)	Pu-244 (8.26 x 10^7 yr)	U-234/ Total Pu	U-235/ Total Pu	Am-241/ Total Pu
MT 83									
83%	83.89	13.8	1.9	0.32	0.09	—	0.26	0.0002	0.003
89%	89.26	10.07	0.633	0.021	0.015	—	0.28	0.0001	0.0002

Source: TWCP-698

The material type used in the process generating each waste item was documented on the WODF and DWLS. However, some of the plutonium recovery processes separate plutonium and americium, or plutonium and uranium, so that their relative ratios may be altered in the process outputs and wastes. Waste items may be either depleted or enriched in americium depending on whether the source of contamination is the process product or the process residues (TWCP-882).

Residues submitted for reprocessing often contain Np-237, the decay product of Am-241 (half-life, 458 yr). This radioisotope is expected to be present in minor amounts in nearly all debris waste from Pu-238 operations at TA-55.

In general, uranium and its isotopes are expected to be present only at trace levels, if at all. U-234 is expected to be the most common uranium isotope in MT 83 waste because it is the decay product of Pu-238 (half-life, 87.74 years). After 20 years, 14.6 percent of the initial Pu-238 would have decayed to U-234. For MT 83 with an initial content of 83.89 percent Pu-238, the atomic ratio U-234 to total Pu would be about 0.14U-238 would only be present if purposefully added to the feed material. U-235 ingrowth from the decay of Pu-239 (half-life, 24,120 years) would be negligible due to the long half-life of Pu-239. No U-236 is present.

Less common radionuclides present as trace-level contaminants in TA-55 plutonium operations, including the Pu-238 operations, are Am-241, Am-243, Cs-137, Np-237, Th-232, U-235, and U-238.

Table 3 lists analyses of actinide impurities in several $^{238}PuO_2$ fuel lots as received from SRS for LWRHU production. For the actinides measured, the total concentrations of actinide impurities in the sampled fuel lots are less than 5000 ppm, or 0.5 weight percent.

Table 3. Actinide Impurities in $^{238}PuO_2$ Fuel Lots for Cassini Program

Isotope	Concentration in LANL Fuel Lot (μg/g Pu)				
	272	*274*	*275*	*285*	*286*
^{232}Th	1700	1800	2300	2190	1845
^{234}U	300	190	1070	720	615
^{236}Pu	<1	<1	<1	<1	<1
^{237}Np	1030	1060	1460	1500	1545
^{241}Am	46	49	71	29	36
Total	3076	3099	4901	4439	4041

Source: TWCP-1030

During TWCP characterization, the contents of each waste package undergo non-destructive analysis to provide detailed radioisotopic data. These data will be used to evaluate the accuracy of AK information in accordance with *Waste Characterization Data Reconciliation with Acceptable Knowledge* (TWCP-DTP-1.2-064). The AK report for Pu-238 waste streams will be updated to incorporate the results of these comparisons.

3.6.3 Chemical Content Identification

Chemical inputs to Pu-238 operation processes are listed in Table 4. The use of strong acids, bases, or oxidizers does not result in RCRA listings for solid wastes from these processes because of the absence of free liquids in this waste.

4.0 ASSIGNMENT OF EPA HAZARDOUS WASTE NUMBERS

EPA HWN assignments to process wastes from Pu-238 operations are summarized below, as well as on the process timelines in Attachment 3, and in the table of process inputs and outputs in Attachment 4. These assignments take into account the possible presence of RCRA-listed chemicals in process waste as a result of their suspected or known presence in feed materials, chemical inputs, equipment, and glovebox surfaces.

4.1 F, K, and P Listings

RCRA-regulated F-listed, K-listed and P-listed materials are not present in the feed materials and are not introduced as a part of Pu-238 operations. Therefore, no F-listed, K-listed or P-listed constituents are present in solid waste generated by Pu-238 operations.

Table 4. Chemical Inputs to Processes Described in This Report

Chemical Input	Comments on Applicability of RCRA Listing
Gas	No RCRA-regulated gases are used
Argon gas	
Acids	
Hydrobromic acid	D002 (corrosivity) does not apply to the solid debris waste because there are no free liquids in this waste. D001 (oxidizer) does not apply to the use of nitric acid for the same reason.
Hydrochloric acid	
Hydrofluoric acid	
Nitric acid	
Oxalic acid	
Sulfuric acid	
Base	
Sodium hydroxide	D002 does not apply to the solid debris waste because there are no free liquids in this waste.
Inorganic Chemicals	No RCRA-regulated inorganic chemicals are used
Aluminum nitrate	
Aluminum oxide	
Calcium chloride	
Diamond	
Ferric nitrate	
Ferrous salt	
Hydroxylamine nitrate	
Magnesium chloride	
Magnesium oxide	
Silicon carbide	
Sodium nitrite	
Sodium pyrophosphate	
Metals	No RCRA-regulated metals are used
Calcium	
Iridium	
Yttrium	
Organic Chemicals	
Diethylenetriamine	
Duco cement (glue)	
Epoxy mounting resin	
Ethanol	D001 (ignitability) does not apply because there is no free liquid in solid debris waste.
Ethylene glycol	
Fantastik	
Ion exchange resins	
Phenophthalein	
Sucrose	
UCAR C-34 cement	
Urea	

4.2 Toxicity Listings

EPA HWNs D007 (chromium), D008 (lead), and D009 (mercury) are applicable to only the calcined hydroxide cake waste generated by P/S code R8.

Sampling and analysis of waste material from Pu-238 waste streams has been performed to confirm that these waste streams do not contain regulated heavy metals above regulatory levels (TWCP-1698, TWCP-AK-2.1-011). Table 5 summarizes the analytical results, which show that all of the randomly selected items for the TCLP test are below the regulated concentrations. These analyses confirm the high purity of the SRS feed material, and the absence of RCRA-regulated metals from Pu-238 processing operations at TA-55.

Table 5. TCLP Concentrations (ppm) in Wastes from Pu-238 Operations

Description	Silver	Arsenic	Barium	Cadmium	Chromium	Lead	Selenium	Mercury
Detection Limit[a]	*0.022*	*0.33*	*0.0055*	*0.022*	*0.055*	*0.22*	*0.55*	*0.0001*
RCRA regulatory threshold	*5*	*5*	*100*	*1*	*5*	*5*	*1*	*0.2*
Metal I	0.031	---	0.14	---	---	---	---	0.0003 [b]
Metal II	---[c]	---	0.17	---	---[c]	---	---	0.005
Plastic I	---	---	0.62	0.44	---	---	---	---[b]
Plastic II	---[c]	---	0.39	---	0.093[c]	---	---	0.0002
Plastic III	---[c]	---	0.24	---	0.21[c]	---	---	0.0002
Rubber I	---	---	1.8	---	0.099	---	---	---[b]
Rubber II	---[c]	---	0.34	---	0.071[c]	---	---	0.0002
Combustible and rags I	---[c]	---	0.32	0.057	---[c]	---	---	0.0002
Combustible and rags II	---[c]	---	0.37	0.101	0.079[c]	2.1	---	0.0006
HEPA filter I	---[c]	---	1.5	0.11	1.2[c]	---	---	0.0001
HEPA filter II	---[c]	---	1.4	0.83	2.7[c]	---	---	0.0495
HEPA ALB[d]	---	---	0.006	---	0.058	---	---	---[b]
HEPA SSH[d]	---	---	0.009	---	0.062	---	---	---[b]

--- indicates "not detected," i.e., measured values below the detection limit.

[a] Detection limit represents the instrument detection limit multiplied by a dilution factor, in accordance with the Toxicity Characteristic Leaching Protocol

[b] Detection limit is 0.0003 ppm for these samples

[c] These data have been qualified during data validation. See Appendix C in TWCP-1698 for details

[d] Cold (non-radioactive) surrogate HEPA filter metal housing samples

Source: Table III.1 in TWCP-1698

5.0 VERIFICATION THAT IGNITABLE, REACTIVE, AND CORROSIVE WASTES WERE EXCLUDED

According to the WIPP WAP, "The prohibition of liquids and containerized gases prevents the shipment of corrosive, ignitable, or reactive wastes." Administrative controls on waste packaging were in place at various times to ensure the absence of such items from the waste stream.

- Liquids were prohibited from solid waste streams at TA-55 when the facility opened in January 1978. A waste management procedure written to cover operations at the new facility, *TA-55 Standard Operating Procedure (SOP) 406-GEN-R00*, stated that "Liquids are not permitted in any container of solid waste materials" (TWCP-3943).

- Chemical Waste Disposal Requests introduced in June 1980 included checkboxes which the waste generator was required to check if the waste contained corrosive acids or bases, or pyrophoric, flammable, corrosive, explosive, toxic, carcinogenic or highly reactive materials.

- The Certification Plan (TWCP-697) and related Generator Attachments (TWCP-701) were implemented in 1987. Waste generators were required to sign a statement on the WODF documenting that the waste contained "no free liquids, pyrophorics, explosives, compressed gases, powders or materials other than the indicated matrix." Checkboxes were also present for indicating the presence or absence of corrosive chemicals. Full implementation of this generator statement occurred in May 1987.

- Waste management inspectors perform visual examination of the waste prior to its initial packaging, thus allowing the inspectors to verify the generator's WODF statement (TWCP-701, Sections 3.8.5 to 3.8.6).

- In addition to the above-mentioned prohibitions on explosives in wastes, explosives were prohibited from TA-55 until installation of the Impact Test Facility in the early 1990s. Explosives continue to be banned in the solid waste streams up to the present time. In the event of a misfire or unconsumed explosives, the requirement is to destroy the unspent powder by burning (TWCP-4720).

- The Waste Profile Request Form (WPRF), which has been in use at LANL since 1991, includes a statement which must be authenticated by the waste generator, that the waste is not ignitable (flash point >200°F), reactive, or corrosive.

- The TA-55 Generator Attachments to the Certification Plan were updated in 1995 (TWCP-700) but the prohibition on liquids in the waste, and the waste management inspection, remained in effect.

Hence, since the inception of operations at TA-55, corrosive and reactive wastes have been excluded from TA-55 solid wastes through the prohibition of liquids.

The absence of these prohibited items is verified through radiography of each waste container and visual examination of selected containers during TWCP characterization activities. These data are used to assess the accuracy of AK information in accordance with *Reconciliation of Visual Examination and Radiography Information* (TWCP-QP-1.1-028). Any free liquids are remediated, and any containerized gases that are found to be present are removed, or the container is tagged as non-compliant by filing a Prohibited Waste Report in accordance with *Nonconformance Reporting and Tracking* (TWCP-QP-1.1-007).

6.0 VERIFICATION THAT INCOMPATIBLE CHEMICALS WERE PROHIBITED

Section 5.0 summarizes administrative controls in place at TA-55 that prohibit incompatible chemicals in the waste, and measures taken to verify their absence. In addition, all waste containers shipped from TA-55 to TA-54 for storage were evaluated for potentially incompatible chemicals in accordance with 49 CFR Subpart C—Segregation and separation chart of hazardous materials; Section 177.848, Segregation of hazardous materials, and were determined to be in compliance with this requirement.

7.0 VERIFICATION THAT THERE ARE NO COMPRESSED GASES, FREE LIQUIDS, NONRADIONUCLIDE PYROPHORICS, SEALED CONTAINERS GREATER THAN FOUR LITERS IN VOLUME, OR >1% RADIONUCLIDE PYROPHORICS

Most gases used at the TA-55 Plutonium Facility are stored outside the building and the gas is plumbed into the glovebox from outside the building (TWCP-4164). Occasionally, a lecture bottle may have been used for a process inside the building, but these bottles were kept outside of the glovebox with the gas plumbed into the glovebox. Consequently, compressed gas cylinders or containers are not expected to be in any of the TRU wastes generated by TA-55 operations.

Spray cans, especially WD-40, were in common use in TA-55 gloveboxes until May 1992 (TWCP-4166). These were routinely discarded as metal debris waste. From 1988 until May 1992, the protocol was to vent or puncture the spray cans inside the glovebox; venting was indicated by inserting a metal wire into the valve. After May 1992, spray cans were no longer used in gloveboxes.

Verification that individual waste drums do not contain compressed gases, free liquids, or sealed containers greater than 4 liters in volume is obtained from radiography of each waste container and visual examination of selected containers during TWCP characterization activities. Any free liquids are absorbed, and any sealed containers greater than 4 L in volume, or unpunctured or unvented gas containers, are removed; or else the container is tagged as non-compliant by filing a Prohibited Waste Report in accordance with *Nonconformance Reporting and Tracking* (TWCP-QP-1.1-007).

Administrative and procedural controls on the prohibited pyrophorics in TRU waste and the absence of pyrophorics has been verified through testing. For items of pyrochemical

salt waste, the procedures of oxygen sparging and/or carbonate oxidation have been used since May 1987 to ensure that pyrophorics were oxidized. In addition, screening tests on similar pyrochemical salts and residues (which contain higher amounts of plutonium) at the RFETS (TWCP-2501) have shown (1) no autoignition, (2) no spontaneous combustion, and (3) no sparking. Experimental results on the reactivity of LANL direct oxide reduction (DOR) salt with water and the reactivity in air of heated calcium metal nodules from DOR salts indicate the absence of "dangerous when wet materials" and pyrophoricity in these salts (TWCP-3730, TWCP-3731, TWCP-3732).

Chemical Waste Disposal Requests dated as early as June 1980 included boxes that were required to be checked if the waste contained pyrophoric, flammable, corrosive, or explosive materials.

In addition, for wastes generated after the implementation of the 1987 Certification Plan, Generator Attachments, associated waste packaging procedures, and quality assurance systems, the waste generator has signed a statement on the WODF for each waste item stating that waste contains "no free liquids, pyrophorics, explosives, compressed gases, powders or materials other than the indicated matrix." The TA-55 Attachment to the Certification Plan describes how these restrictions were verified by waste management personnel (TWCP-701, Sections 3.8.5 through 3.8.7).

8.0 VERIFICATION THAT THERE ARE NO POLYCHLORINATED BIPHENYLS (PCBs) IN THE WASTE STREAM

No PCBs were introduced into the nitrate operations, based on documentation in TA-55 procedures reviewed during the AK investigation and summarized in lists of process inputs documented in the TA-55 process AK reports.

- In the cement fixation process (P/S codes CF and HP), oils are sometimes added to drums of cemented waste. There is no indication these oils contain PCBs, and they are added to the 55-gallon drums of cement in small quantities (maximum of 6 liters [TWCP-3568/N-74]). The oils are primarily vacuum pump oils, along with some oils used in heat-treating (cooking or silicone oils) or in grinding (TWCP-3568/N-82). None of these oils are known to contain PCBs.

- All transformers known to contain PCBs have been tracked from initiation of operations of TA-55 in 1978. When any transformer oil is drained, the oil is handled by a subcontractor who is wholly responsible for its disposal; this oil does not enter the LANL disposal operations (TWCP-3568/N-82).

- Ballast in fluorescent light fixtures could contain PCBs, but at TA-55 these light fixtures are outside the gloveboxes and hence would not enter the TRU waste stream.

- Oil-filled capacitors are not known to have been used in TA-55 gloveboxes.

In addition, if the possibility exists for the waste to contain PCBs, RTR operators are required to check for indications of PCB-containing materials or PCB-contaminated materials. If there is reason to suspect that an item may contain PCBs (based on AK, operator training, or previous operator experience), then the operator submits a PWR and places a hold tag on the waste container (Section 6.6.6 and Table 3 in *Performing Nondestructive Testing Using the Mobile Real-Time Radiography System* [TWCP-DTP-1.2-008]).

9.0 CITED PROCEDURES AND REQUIREMENTS DOCUMENTS

- 40 CFR Part 261, Subpart C—Characteristics of hazardous waste, Sections 261.21 (*Characteristic of ignitability*), 261.22 (*Characteristic of corrosivity*), 261.23 (*Characteristic of reactivity*), and 261.24 (*Toxicity characteristic*)
- 40 CFR Part 261, Subpart D—Lists of hazardous waste, Sections 261.31 *(Hazardous wastes from non-specific sources),* 261.32 *(Hazardous wastes from specific sources),* and 261.33 *(Discarded commercial chemical products, off-specification species, container residues, and spill residues thereof)*
- 49 CFR Subpart C—Segregation and separation chart of hazardous materials. Section 177.848, *Segregation of hazardous materials*
- *Acceptable Knowledge Documentation* (TWCP-QP-1.1-021)
- *Nonconformance Reporting and Tracking* (TWCP-QP-1.1-007)
- *Performing Nondestructive Testing Using the Mobile Real-Time Radiography System* (TWCP-DTP-1.2-008)
- *Reconciliation of Visual Examination and Radiography Information* (TWCP-QP-1.1-028)
- *Waste Acceptance Criteria for the Waste Isolation Pilot Plant* (DOE/WIPP-069)
- *Waste Analysis at Facilities that Generate, Treat, Store and Dispose of Hazardous Waste* (EPA/OSWER 9938.4-03)
- *Hazardous Waste Facility Permit Issued to the Waste Isolation Pilot Plant* (EPA No. NM4890139088)
- *Waste Characterization Data Reconciliation with Acceptable Knowledge* (TWCP-DTP-1.2-064)

ACCEPTABLE KNOWLEDGE ROADMAP

P/S Codes: ASP, GPHS, MTL, P1, R8, RCI, SCP, WS

Copies of these documents are in the TWCP RMDC Center.

TWCP Record No.	Information Category Code*	Information	Source	Summary	Limitations
TWCP-0351	C	Pu-238 discard limits	TA-55 Waste Management, 539-GEN-R02, 10/18/96, Appendix J	Lists Pu-238 discard limits in various process materials.	None
TWCP-0352	C	Generic plutonium recovery process description	Wastes from Plutonium Conversion and Scrap Recovery Operation; LA-11069-MS; March 1998	Document describes the Pu residues and the various treatment approaches used in recovering Pu from scrap.	None
TWCP-0415	B	TA-55 Pu-238 processes	FSAR for TA-55 (Section 2.5.9, pp. 2-164 to 2-166)	Describes the TA-55 Pu-238 operations.	Document does not give information about RCRA constituents introduced or present in the processes.
TWCP-0697	B	Waste controls	Los Alamos Certification Plan, WCP-HSE7-CPL-01,R2, 1984	Waste was controlled to meet WIPP WAC requirements as early as 1984. Generator Attachments were used to describe and reference specific generator procedures.	Overview document - Generator Attachments provide more detailed information.
TWCP-0698	D	Material Type compositions	Memo from Bill Schueler, NMT-7.	Gives Material Type compositions	Does not give information on actual material used in the Pu-238 processes.
TWCP-0700	C	Waste controls	TA-55 Generator Attachment to the LANL Certification Plan, TRU-TA55-CPA-03,R00, 1995	Documents controls to meet WIPP WAC were implemented and how independent verification was accomplished.	Information is not extremely detailed.

* Information Category Codes: A = forms intended for use in waste certification, B = data from controlled databases and published documents, C = unpublished data, and D = interviews, memos, and letters

TWCP Record No.	Information Category Code*	Information	Source	Summary	Limitations
TWCP-0701	C	Waste controls	TA-55 Generator Attachment to the LANL Certification Plan, TRU-MST12-CPA-03,R00, 1987	Documents controls to meet WIPP WAC were implemented and how independent verification was accomplished.	Information is not extremely detailed.
TWCP-0813	D	Waste characterization	Memo from Davis Christensen, EM-SWO: 97-201	Clarifies the history of assigning EPA hazardous waste codes in the TRU Database to waste generated before 1993.	Indicates that EPA assignments made on the basis of AK in 1992 are subject to change through additional AK information.
TWCP-0816	D	Jim Foxx Interview on Number of Layers of Packaging	C.L. Foxx, Los Alamos National Laboratory	Provides an explanation of why some containers of combustible debris may be packaged with 6 layers of confinement	No direct way to differentiate between 4 and 6 layers of packaging
TWCP-0882 (UCNI)	D	Secondary Radionuclides and Toxic Metals in TA-55 TRU Waste	Memo from TA-55 Subject Matter Expert C.L. (Jim) Foxx	Wastes may be either depleted or enriched in Am-241 and U-234, depending upon whether the source of contamination is the process product or the process residue.	Text does not specifically discuss Pu-238 processes although these P/S codes are listed in the table attached to the memo
TWCP-0886	C	Color Flow Diagram of Pu-processes at TA-55.	Diagram from Jim Foxx	Indicates that process inputs are thermally treated and that heavy metals from process inputs end up in the nitric acid evaporator bottoms.	Does not indicate solvent input to processes.
TWCP-0887	D	Defense and non-defense TRU waste management	Memo from Jim Foxx	Wastes generated from defense and non-defense activities were not segregated at TA-55 through 1997.	None
TWCP-0934	D	Pu-238 and Pu-239 waste management	Memo from TA-55 Subject Matter Expert C.L. (Jim) Foxx	Pu-238 and Pu-239 processes and the wastes generated from those processes were segregated at TA-55.	None

* Information Category Codes: A = forms intended for use in waste certification, B = data from controlled databases and published documents, C = unpublished data, and D = interviews, memos, and letters

TWCP Record No.	Information Category Code*	Information	Source	Summary	Limitations
TWCP-1025	C	Characterization of LWRHU waste	LANL Report number LA-11166-MS pp. 8, 9, 14	Provides tables of summarized analytical results for as-received and partially processed Pu-238 used in the Galileo LWRHU process.	Materials in these waste streams would have been produced as the result of processing many of the lots.
TWCP-1026	C	Characterization of MWG waste	LANL Progress Report numbers LA-9170-PR LA-9672-PR LA-11217-PR LA-11220-PR LA-11346-PR LA-12236-PR LA-13258-PR	Tables of trace element analytical results show that some RCRA metals are present below regulatory threshold limits in the waste from the Milliwatt Generator Program, and allow calculation of maximum concentration limits for other RCRA metals.	None
TWCP-1027	B	Characterization of epoxy cement used in Pu-238 process	MSDS for epoxy cement, UCAR C-34, Union Carbide Corporation	Indicates that the epoxy cement used in the Pu-238 process does not contain any RCRA-regulated materials.	None
TWCP-1030	C	Characterization of LWRHU waste	LANL Report number LA-13143-MS pp. 5-6, 7-8, 17-18.	Summarized analytical results of as-received and partially processed Pu-238 materials used in the Cassini LWRHU process.	Materials in these waste streams generally would have been produced as the result of processing many of the lots.
TWCP-1037	D	^{238}Pu fabrication process description	Written information obtained from a TA-55 waste management expert.	Detailed information of all facets of ^{238}Pu fabrication activities.	References to documents providing additional information are not provided in the memo, but have been added to the AK Summary Report.
TWCP-1044	D	Waste characterization	SRS Memo NMS-EHB-970073, March 12, 1997	Describes the SRS process for producing the Pu-238 that was used at TA-55 and presents analyses for metals in the Cassini material.	No flow diagram included.

* Information Category Codes: A = forms intended for use in waste certification, B = data from controlled databases and published documents, C = unpublished data, and D = interviews, memos, and letters

TWCP Record No.	Information Category Code*	Information	Source	Summary	Limitations
TWCP-1698		Analyses of TRU waste from TA-55-43, Lot No. 1	Cover letter and enclosed report, "Sampling and Analysis Project Validates Acceptable Knowledge on TA-55-43, Lot No. 01"	Analytical results confirm that TA-55-43 is not a hazardous waste regulated by RCRA	None
TWCP-2501	B	"Backlog Waste Reassessment Baseline Book, Waste Form 34"	Rocky Flats Environmental Technology Site Report 1995	Page WF34-10 contains results of tests for corrosivity	Tests are on residues rather than waste that is lower in Pu content; hence, they are conservative.
TWCP-3545/P238-01	C	General process information	Comments from Jim Foxx on the draft ^{238}Pu AK Summary Report, 11/99	Details for the ^{238}Pu process, specifically RCRA-regulated metals in the R8 process and radioisotope information.	None
TWCP-3545/P238-02	D	General ^{238}Pu process information	Interview with Jim Foxx, 9/21/99	Waste generated from ^{238}Pu processes.	None
TWCP-3545/P238-03	C	Pu-238 fuel fabrication process description (P/S code P1)	Process flow diagram for Routine Pu-238 Heat Source Production – Fuel Fabrication, 5/14/98	Overview of the Pu-238 fuel fabrication process, identifying steps within the process and process outputs. Date established is 9/25/91.	None
TWCP-3545/P238-04	C	Heat source production process description (P/S code P1)	Sampling PuO_2 Procedure; HS-CMB11-PP13, Rev. 0 through Rev. 3, 2/20/80 through 3/24/82; HS-MST11-PP-13, Rev. 4 through Rev. 10, 10/22/82 through 4/26/89	Step-by-step instructions for sampling PuO_2 during processing operations.	The P/S code is not identified in the procedure. Based on the process described in the procedure and the flow diagram for P1 Fuel Fabrication, this procedure is assigned to P/S code P1.
TWCP-3545/P238-05	D	General ^{238}Pu process information	Interview with Jim Foxx, 8/31/99	Waste generated from specific ^{238}Pu processes.	None

* Information Category Codes: A = forms intended for use in waste certification, B = data from controlled databases and published documents, C = unpublished data, and D = interviews, memos, and letters

TWCP Record No.	Information Category Code*	Information	Source	Summary	Limitations
TWCP-3545/P238-06	C	Chemical list, process description (P/S P1)	Particle Size Analysis of Oxide Powders Procedure, HS-NMT9-PP-42, Rev. 0 through Rev. 1, 4/22/91 through 12/11/91	Step-by-step instructions for analyzing metal oxides and the waste disposal process.	The P/S code is not identified in the procedure. Based on the process described in the procedure and the flow diagram for P1Pellet Production, this procedure is assigned to P/S code P1.
TWCP-3545/P238-07	C	Pellet production process description (P/S code P1)	Process flow diagram for Routine Pu-238 Heat Source Production – Pellet Production, 5/14/98	Overview of the pellet production process, identifying steps within the process and process outputs. Date established is 9/25/91.	None
TWCP-3545/P238-08	C	Scrap and process residues process description (P/S code P1)	Process flow diagram for Routine Pu-238 Heat Source Production – Scrap and Process Residues Processing, 5/14/98	Overview of the residues processing process, identifying steps within the process and process outputs. Date established is 6/16/88.	None
TWCP-3545/P238-09	C	Metallography process description (P/S code MTL)	Process flow diagram for Metallography, 6/22/97	Overview of the metallography process, identifying steps within the process and process outputs. Date established is 7/26/94.	None
TWCP-3545/P238-10	C	Chemical list, process description (P/S code MTL)	Ceramography of $^{238}PuO_2$ fuel samples; HS-NMT9-PP-44, Rev. 0, 1/8/92	Step-by-step instructions for the preparation and examination of $^{238}PuO_2$ fuel samples and the waste disposal process.	The P/S code is not identified in the procedure. Based on the process described in the procedure and the flow diagram for MTL, this procedure is assigned to P/S code MTL.
TWCP-3545/P238-11	C	Scrap processing process description (P/S code SCP)	Process flow diagram for Routine Pu-238 Scrap Processing, 8/27/91	Overview of the scrap processing operation, identifying steps within the process and process outputs. Date established is 6/16/88.	None

* Information Category Codes: A = forms intended for use in waste certification, B = data from controlled databases and published documents, C = unpublished data, and D = interviews, memos, and letters

TWCP Record No.	Information Category Code*	Information	Source	Summary	Limitations
TWCP-3545/P238-12	C	$^{238}PuO_2$ transfer process description (P/S code SCP)	Introductory Glovebox Transfer of an EP-60 into an EP-61, HS-NMT9-PP-46, Rev. 0 through Rev. 1, 12/23/91 through 9/24/92	Step-by-step instructions for transferring $^{238}PuO_2$ from an inner shipping container into an outer shipping container.	None
TWCP-3545/P238-13	C	Chemical list and process description (P/S code RCI)	Decontamination of Ir Using Molten $MgCl_2$, HS-NMT9-PP-38, Rev. 0, 5/9/90 through 10/8/92	Provides step-by-step instructions for decontaminating Ir coated with $^{238}PuO_2$.	The P/S code is not identified in the procedure. Based on the process described in the procedure and the flow diagram for RCI, this procedure is assigned to P/S code RCI. Handwritten note at top of procedure: "obsolete 10/8/92 per WI 1392." This agrees with the "SOP Document History Report" attached to the procedure.
TWCP-3545/P238-14	C	Process description (P/S code RCI)	Process flow diagram for Recovery of PuO2 238 from Contaminated Iridium, 6/10/91	Overview of the ^{238}Pu recovery process, identifying steps within the process and process outputs. Date established is 5/15/91.	None
TWCP-3545/P238-15	C	Chemical list, process description (P/S code RCI)	Dissolution of Ir by Electrochemical Methods; HS-NMT9-PP-39, Rev. 0, 5/9/90	Step-by-step instructions for decontaminating Ir coated with $^{238}PuO_2$ using electrochemical dissolution.	The P/S code is not identified in the procedure. Based on the process described in the procedure and the flow diagram for RCI, this procedure is assigned to P/S code RCI. Handwritten note at top of procedure: "obsolete 10/8/92 per WI 1392." This agrees with the "SOP Document History Report" attached to the procedure.

* Information Category Codes: A = forms intended for use in waste certification, B = data from controlled databases and published documents, C = unpublished data, and D = interviews, memos, and letters

TWCP Record No.	Information Category Code*	Information	Source	Summary	Limitations
TWCP-3545/P238-16	C	Chemical list, process description (P/S code R8)	238Pu Waste Solidification, HS-MST11-PP-34, Rev. 0, 8/4/86; HS-NMT9-PP-34, Rev. 1 through Rev. 3, 9/6/90 through 12/9/92	Step-by-step instructions for solidifying ^{238}Pu waste solutions.	The P/S code is not identified in the procedure. Based on the process described in the procedure and the flow diagram for R8 Waste Solidification, this procedure is assigned to P/S code R8.
TWCP-3545/P238-17	C	^{238}Pu waste solidification process description (P/S code R8)	Process flow diagram for ^{238}Pu Waste Solidification, 2/25/99	Overview of the ^{238}Pu solidification process, identifying steps within the process and process outputs. Date established is 1/27/84.	None
TWCP-3545/P238-18	C	Feed input for ^{238}Pu solidification process (P/S code R8)	Email from Jim Foxx, "RCRA Codes for Pu-238," 12/9/99	Analytical results for RCRA-regulated metals in analytical solutions feeding the ^{238}Pu solidification process.	Some of the detection limits appeared to be above the regulatory limits
TWCP-3545/P238-19	C	Chemical list, process description (P/S code R8)	Recovery of Plutonium-238 from Sucrose, 483-REC-R00 through R01, 5/17/83 through 9/30/83; Recovery of Plutonium-238 from Sucrose Solutions; HS-MST11-PP-36, Rev. 0, 12/18/87	Step-by-step instructions for recovering ^{238}Pu from sucrose solutions.	The P/S code is not identified in the procedure. Based on the process described in the procedure, this procedure is assigned to P/S code R8 (^{238}Pu recovery from sucrose). Handwritten note at top of 483-REC-R01: "Transferred to MS-11." Handwritten note at top of HS-MST11-PP-36 procedure: "obsolete 5/11/92 per WI 1324."
TWCP-3545/P238-20	D	Process description and chemicals used	Interview with Jim Foxx and Gary Rinehart	Details on process description and chemicals used in the processes based on a review of the draft Pu-238 AK Summary Report.	None
TWCP-3545/P238-21	D	Chemicals used in P/S code RCI	Interview with Jake Espinosa	Specific information regarding the electrolyte solution and electrodes used in the RCI process.	None

* Information Category Codes: A = forms intended for use in waste certification, B = data from controlled databases and published documents, C = unpublished data, and D = interviews, memos, and letters

TWCP Record No.	Information Category Code*	Information	Source	Summary	Limitations
TWCP-3545/P238-22	C	Process descriptions for P/S codes ASP, PPD, and WS	Information provided by Jim Foxx (1/17/00)	Process flow diagram for P/S codes ASP, PPD, WS	Procedures describing the process for the P/S codes have not been identified.
TWCP-3545/P238-23	D	Process information	Email from John Musgrave conveying information from Jim Foxx.	LWRHU and MWG processes are performed under P/S code P1.	None
TWCP-3568 /N-74	C	Chemical list; process description (P/S code CF)	Organic Liquid Emulsification, TRU-NMT2-DP-13, R00; TRUWM-TA55-DP-13-R00; 8/30/93 through 9/30/94	Emulsifying waste oil and other organic liquids for cement fixation.	None
TWCP-3568 /N-82	C	Clarification of specific processes within the nitrate operations at TA-55	Jim Foxx, SME, response to comments received on the *Acceptable Knowledge Summary Report for TA-55 Nitrate Operations*, draft dated 2/25/00	Resolutions to the questions and issues raised by Pam Rogers during her review of the *Acceptable Knowledge Summary Report for TA-55 Nitrate Operations*, draft dated 2/25/00	Information is based on SME knowledge.
TWCP-3730 (UCNI)	B	Pyrophoricity characterization	Characterization of Direct Oxide Salts (LA-CP-95-0098)	Hydrogen generation and pyrophoricity of DOR salts. Also gives reference for MSE, ER, and Cr-containing salts.	None
TWCP-3731	D	Sodium pyrophoricity in pyrochemical salts	Memo (MST-12-ARO-88-052)	Treatment of sodium in salts is effective	Sodium only
TWCP-3732	C	Experimental data on calcium pyrophoricity in salts	Memo (MST-12-ARO-88-077)	Treatment of calcium in salts is effective	Calcium only
TWCP-3943	B	Procedure for Waste Management at TA-55	TA-55 Document, 406-GEN-R00	Contains information on waste management procedures in 1978	None, but doesn't address today's waste management concerns

* Information Category Codes: A = forms intended for use in waste certification, B = data from controlled databases and published documents, C = unpublished data, and D = interviews, memos, and letters

TWCP Record No.	Information Category Code*	Information	Source	Summary	Limitations
TWCP-4162	D	Segregation of non-defense wastes from defense wastes	Interview with Jim Foxx, 10/12/00	Wastes from various processes were not segregated by funding source until recently (1997 or 1998), but rather were segregated and packaged based on waste type	Specific date for segregation by funding source not given
TWCP-4164	D	Use of gases in PF-4	Interview with Jim Foxx, 10/16/00	Most gases used at PF-4 are stored outside the building and the gas is plumbed into the glovebox from outside the building.	None
TWCP-4166	D	Disposal of spray cans used in gloveboxes	Interview with Jim Foxx, 10/17/00	Spray cans, especially WD-40, were in common use in TA-55 gloveboxes until May 1992. These were routinely discarded as metal debris waste. From 1988 until May 1992, the protocol was to vent or puncture the spray cans inside the glovebox; venting was indicated by inserting a metal wire into the valve. After May 1992, spray cans were no longer used in gloveboxes.	None
TWCP-4167	D	Segregation of non-defense wastes from defense wastes	Interview with Jim Foxx, 10/18/00	Wastes from various processes were not segregated by funding source, waste-generating process, or waste-generating location (e.g., room or glovebox) until recently (August 27, 1998), but rather were segregated and packaged based on waste type	None

* Information Category Codes: A = forms intended for use in waste certification, B = data from controlled databases and published documents, C = unpublished data, and D = interviews, memos, and letters

TWCP Record No.	Information Category Code*	Information	Source	Summary	Limitations
TWCP-4720	B	Describes the procedure to be taken at TA-55 in the event of a misfire or unconsumed explosives (from the Impact Test Facility 40-mm gun, P/S codes ITF and ITF4) to ensure that explosives do not enter the waste stream	40-mm Powder Breech Project Waste Management Plan, Rev. 2 (issued March 27, 2000)	Procedure to be taken at TA-55 in the event of a misfire or unconsumed explosives (from the Impact Test Facility 40-mm gun) to ensure that explosives do not enter the waste stream	Does not appear to be a controlled document. Without revision history, cannot tell when this document was first issued, and how the potential for unconsumed explosives was addressed when the Impact Test Facility (ITF) began in 1996
TWCP-5086	B	P/S Codes for TA-55 waste items, listed by drum	P/S codes for waste items in individual drums are either from the TA-55 Waste Management System or from the certified data base	P/S codes for waste items in individual waste containers from TA-55	Only some drums are included
TWCP-5600	D	Description of P/S code ASP, including process flow chart	Interview with SME on work conducted under P/S code ASP	Description and flow chart of steps involved in P/S code ASP, Pu-238 Aqueous Scrap Recovery	None
TWCP-5706	B	Procedure for Direct Oxide Reduction of 238PuO2 (P/S code WS)	NMT9-SOP-0089-R02, Direct Oxide Reduction of 238PuO2	Description of process for P/S code WS (Direct Oxide Reduction of 238PuO2)	None
TWCP-5707	D	Description of P/S code WS	Interview with SME on work conducted under P/S code WS	Description of work conducted under P/S code WS, Pu-238 Direct Oxide Production	None
TWCP-AK-2.1-003, R.2	B	Summarizes AK information on processes conducted in the TA-55 metal operation processes	*Process Acceptable Knowledge Report for Metal Operation Processes*	Discusses P/S code	None
TWCP-AK-2.1-004, R.2	B	Summarizes AK information on processes conducted in the TA-55 miscellaneous processes	*Process Acceptable Knowledge Report for Miscellaneous Operations at TA-55*	Discusses P/S code WM	None

* Information Category Codes: A = forms intended for use in waste certification, B = data from controlled databases and published documents, C = unpublished data, and D = interviews, memos, and letters

TWCP Record No.	Information Category Code*	Information	Source	Summary	Limitations
TWCP-AK-2.1-005, R.2	B	Summarizes AK information on processes conducted in the TA-55 nitrate operations	*Process Acceptable Knowledge Report for Nitrate Operations at TA-55*	Discusses P/S codes CF, ED, HP, MPD, SC, SP, and TDC	None
TWCP-AK-2.1-006, R.2	B	Summarizes AK information on processes conducted in the TA-55 pyrochemical operations	*Process Acceptable Knowledge Report for Pyrochemical Operations at TA-55*	Discusses P/S code	None
TWCP-AK-2.1-007, R.2	B	Summarizes AK information on processes conducted in the TA-55 special processing operations	*Process Acceptable Knowledge Report for Special Processing at TA-55*	Discusses P/S code PPD	None
TWCP-AK-2.1-011, R.0	B	Waste stream report that relies upon the AK information presented in the Pu-238 process AK report	*Acceptable Knowledge Summary Report for Waste Streams TA-55-43, TA-55-44, TA-55-45, TA-55-46 and TA-55-47*	Relies on information in the Pu-238 process AK report	None
TWCP-PLAN-0.2.7-001,R.5	B	Summarizes AK information for individual TRU waste containers	*Los Alamos National Laboratory Transuranic Waste Characterization AK Information Summary*	Assignment of individual TRU waste containers to specific waste streams	Out of date

* Information Category Codes: A = forms intended for use in waste certification, B = data from controlled databases and published documents, C = unpublished data, and D = interviews, memos, and letters

MAP OF LANL

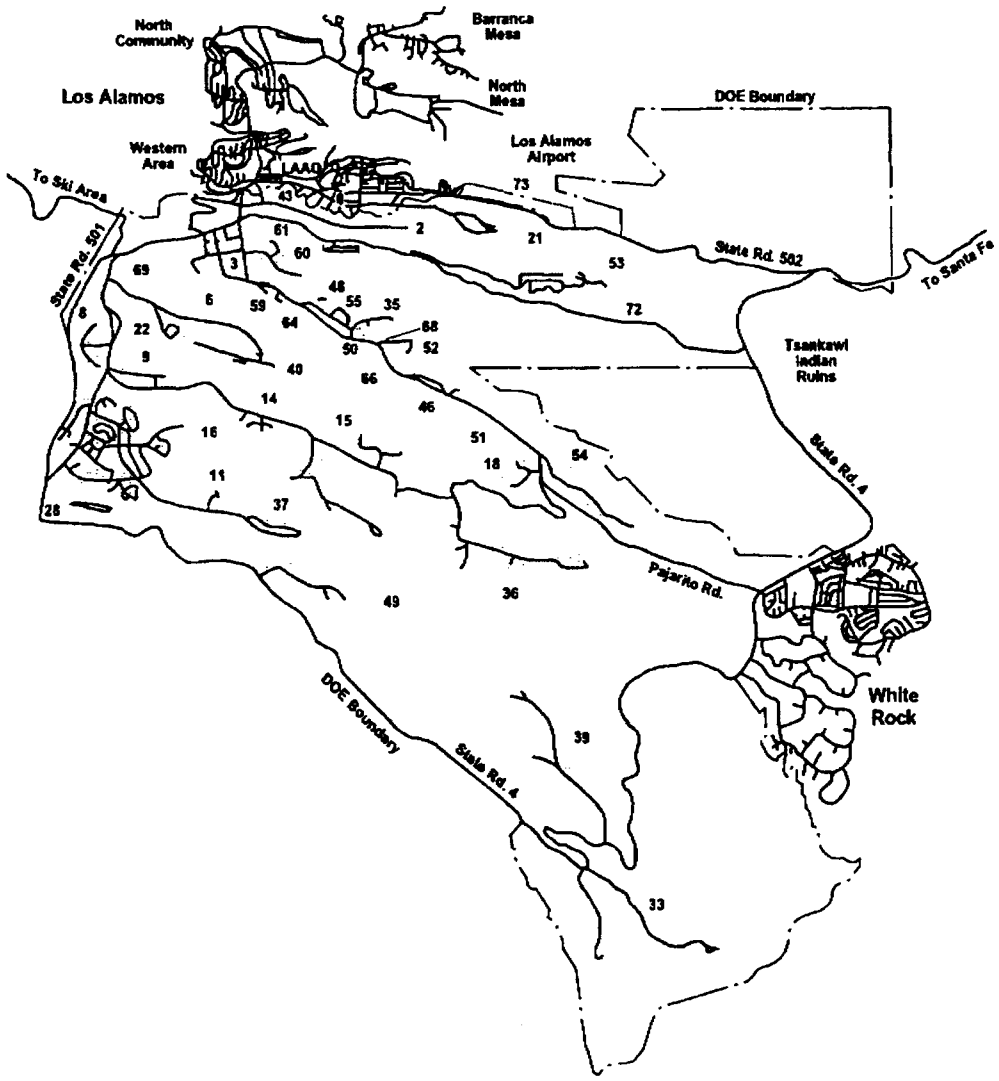

Technical Area Locations

TA-0	Unassigned Land Reserve
TA-2	Omega Site
TA-3	South Mesa Site
TA-5	Beta Site
TA-6	Two Mile Mesa Site
TA-8	Anchor Site West
TA-9	Anchor Site East
TA-11	K-Site
TA-14	Q-Site
TA-15	R-Site
TA-16	S-Site
TA-18	Pajarito Laboratory
TA-21	DP-Site
TA-22	TD-Site
TA-28	Magazine Area A
TA-33	HP-Site
TA-35	Ten Site
TA-36	Kappa Site
TA-37	Magazine Area C
TA-39	Ancho Canyon Site
TA-40	DF-Site
TA-41	W-Site
TA-43	Health Research Lab & DOE Headquarters
TA-46	WA-Site
TA-48	Radiochemistry Site
TA-49	Frijoles Mesa Site
TA-50	Waste Management Site
TA-51	Radiation Exposure Facility
TA-52	Reactor Development Site
TA-53	Meson Physics Facility
TA-54	Waste Disposal Site
TA-55	Plutonium Facility Site
TA-57	Fenton Hill Site
TA-58	Two Mile North Site
TA-59	OH-Site

MAP OF TA-55

Note: The Plutonium Facility, Building PF-4, is labeled PF-4 on this map.

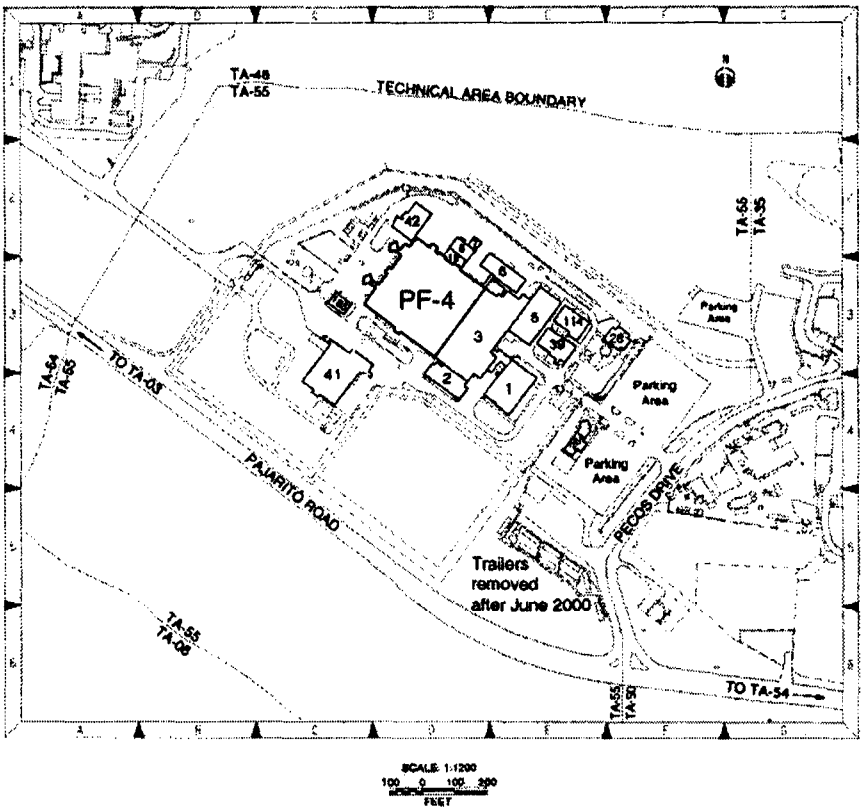

TIMELINE FOR Pu-238 PROCESSES

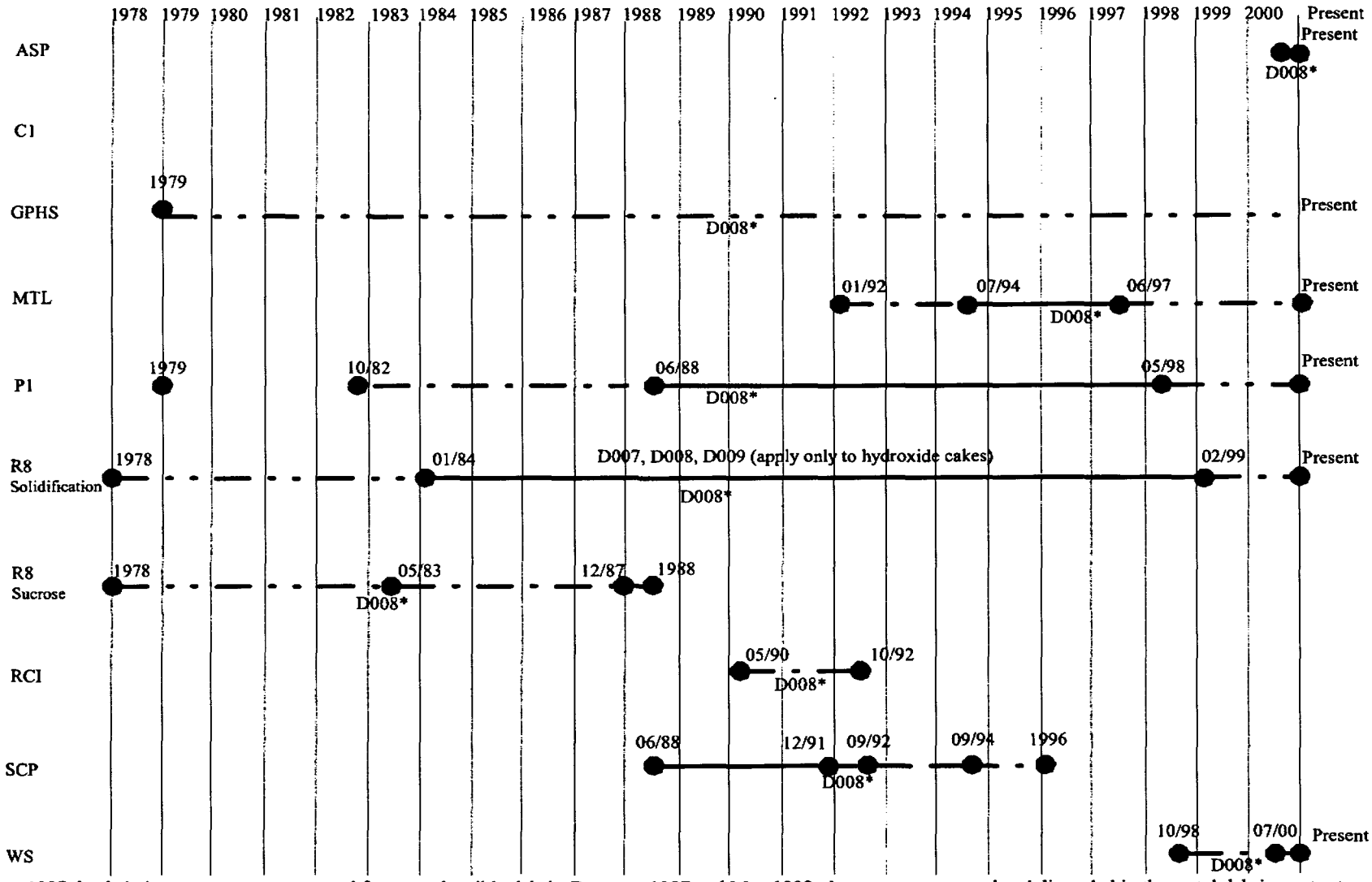

*Prior to 1987, leaded gloves were not segregated from combustible debris. Between 1987 and May 1992, they were segregated and discarded in the metal debris waste stream. Since May 1992, they have been routinely segregated and assigned to a leaded glove waste stream, still under the originating P/S code (TWCP-4166).

TIMELINE EXPLANATION

The P/S code is established either in the P/S diagrams or in both (or all) revisions of the procedures designating the start and end dates (e.g., Rev. 0 to Rev. 1 or Rev. 0 to Rev. 5.

The P/S code is not identified in the procedure, but the process description matches the P/S code and the description in previous or later revisions of the same procedure.

Extrapolate out two (2) years beyond the last revision date for the procedure to the next possible review date.

Time period based on subject matter expert comments.

PROCESS INPUTS AND OUTPUTS

P/S Code	P/S Title	Process Inputs		Process Outputs		EPA Codes[2]	References[3]
		Feed Stream(s)	Chemicals/Reagents	Product	Waste Stream[1]		
ASP	Aqueous Scrap Processing	Scrap items, oxide	Nitirc acid, sodium hydroxide, sodium oxalate	Plutonium oxalate, plutonium hydroxide	Debris	*D008	TWCP-5600
GPHS	General Purpose Heat Source	Pu-238 oxide	Yttrium metal, UCAR C-34 cement	Heat sources	Debris	*D008	P238-01 P238-07 P238-08
MTL	Metallography	Samples from P1	Epoxy mounting resin, aluminum oxide, diamond powder, hydrobromic acid, hydrochloric acid, hydrofluoric acid	Polished samples (archived in glovebox line)	Aqueous abrasive slurries to P/S code R8, debris	*D008	P238-10 P238-20
P1	Heat Source Production	Pu-238 oxide	Yttrium metal, UCAR C-34 cement	Heat sources	Debris	*D008	P238-01 P238-07 P238-08
R8	Waste Solidification	Analytical solutions from CHM-1, CLS-1, NMT-1, C-AAC; metallography; heat source production, and plutonium decontamination operations	Sodium hydroxide, ferric nitrate, phenolphthalien, ethanol,	No product	Hydroxide cakes, debris	HWNs apply only to hydroxide cakes D006, D007, D008, *D008 D009, D011	P238-02 P238-14 P238-15 P238-16 P238-17 P238-18 P238-20 P238-21

P/S Code	P/S Title	Process Inputs		Process Outputs		EPA Codes[2]	References[3]
		Feed Stream(s)	Chemicals/Reagents	Product	Waste Stream[1]		
R8	Recovery of Pu-238 from Sucrose Solutions	Sucrose solutions (containing sodium pyrophosphate and sucrose) used in particle size analysis of $^{238}PuO_2$	None	calcined $^{238}PuO_2$ for reprocessing (if above DL)	Calcined residue of sucrose. Solid debris waste including stainless steel, ceramic, glassware, Tygon tubing, filter paper	*D008	P238-02 P238-19
RCI	Pu-238 Recovery from Iridium	Iridium contaminated with Pu-238 oxide	Magnesium chloride, nitric acid, hydrochloric acid, sulfuric acid	Cleaned iridium metal	Debris, magnesium oxide crucibles	*D008	P238-13 P238-14 P238-20
SCP	Scrap Processing	Pu-238 oxide	Physical process – no chemicals used	Pu-238 oxide	Debris	*D008	P238-11 P238-12
WS	Pu-238 Direct Oxide Reduction	plutonium oxide (high purity)	Calcium metal, oxygen gas, chlorine gas, calcium chloride, calcium fluoride	plutonium metal	Calcium chloride salt, magnesia crucibles, calcium oxide, calcium metal, debris	*D008	TWCP-5706 TWCP-5707

[1] All P/S codes generate routine laboratory debris waste consisting of glassware, plastics, ceramic materials, paper, rags, HEPA filters, metal containers, brushes, and small tools. Leaded gloves may also be generated and are segregated.

[2] See discussion in Section 4.0 for details on the applicability of the RCRA codes listed in this column. The RCRA hazardous waste codes listed apply to the solid TRU waste only and not to any other waste forms that may undergo further treatment or processing (e.g., evaporation or cement fixation). The resulting treated waste stream is evaluated for hazardous waste constituents and assigned the applicable EPA hazardous waste codes. All P/S codes have the potential to generate leaded gloves. The gloves are segregated from other metal debris waste and are assigned EPA hazardous waste code D008 under the originating P/S code.

[3] Refer to the Acceptable Knowledge Roadmap in Attachment 1. References listed as P238-*nn* (where *nn* is a 2-digit number) are in TWCP-3545.

*D008 due to leaded gloves

SIMPLIFIED Pu-238 PROCESS FLOW DIAGRAMS: AQUEOUS SCRAP PROCESSING (P/S code ASP) (TWCP-5600)

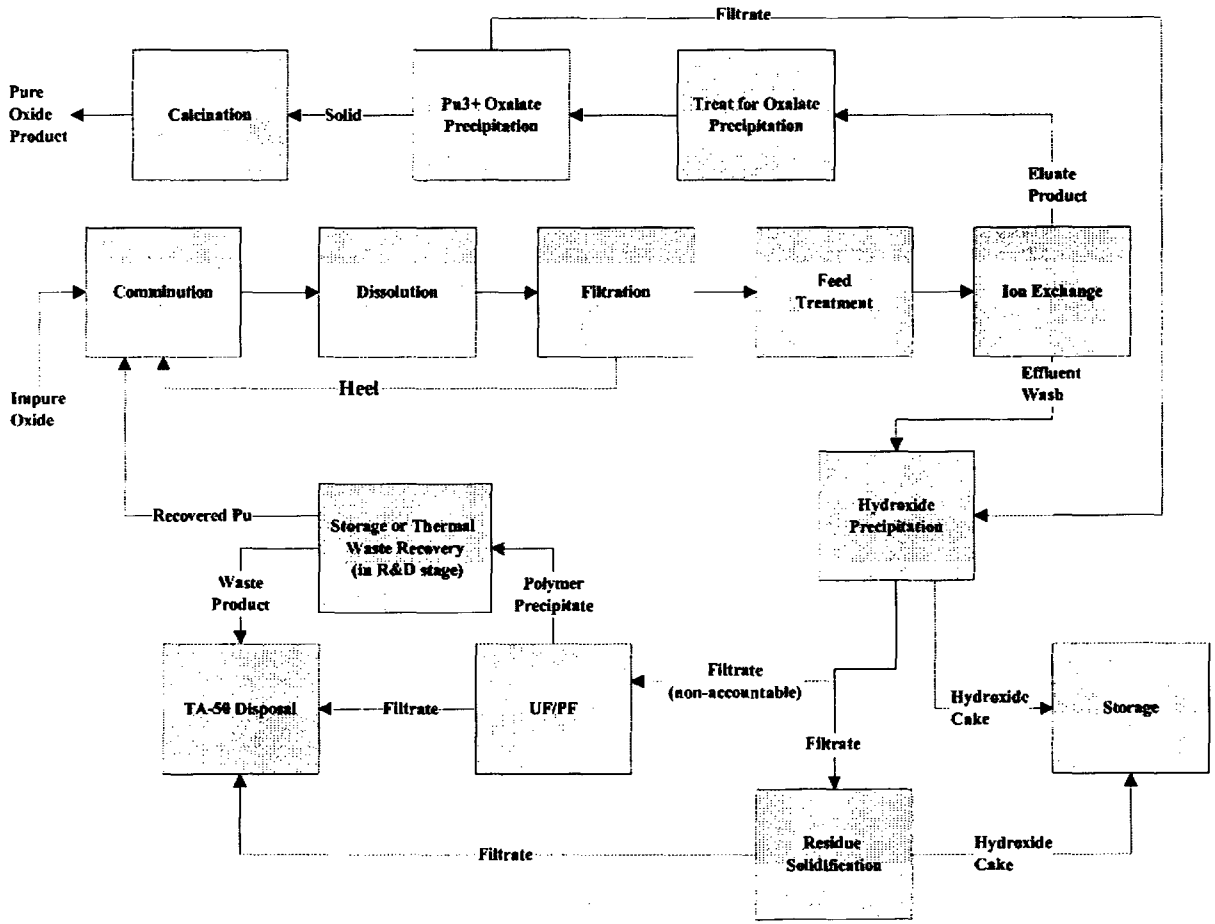

SIMPLIFIED Pu-238 PROCESS FLOW DIAGRAMS: OTHER Pu-238 PROCESSES

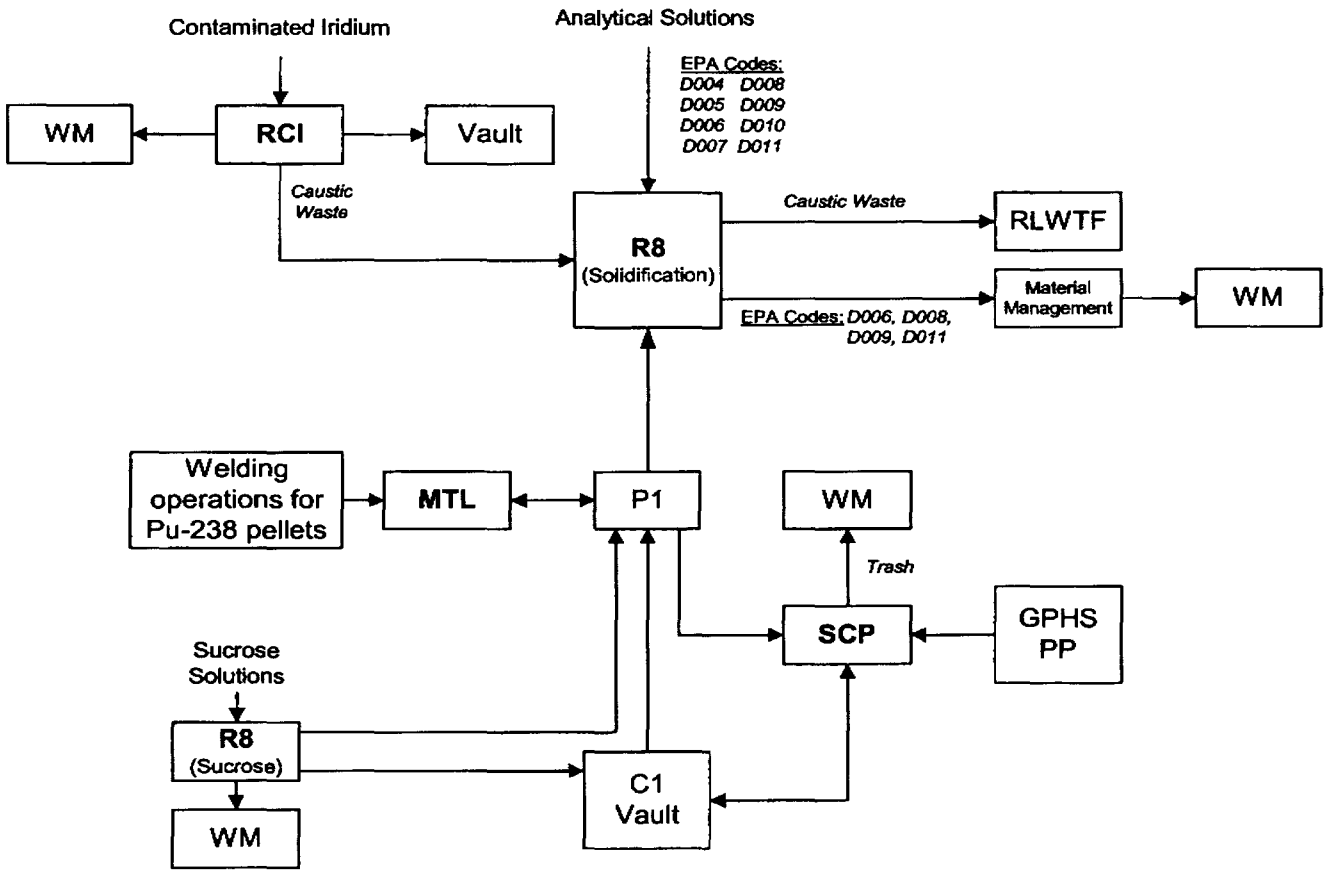

Decision/Discrepancy Resolution Documentation
TA-55 Pu-238 Operations

Item Identification*	AK No. 1	Source No. 1	AK No. 2	Source No. 2	Decision/Discrepancy	Rationale**
WS	WS performed in 10/98 and 10/99	TWCP-5707	P/S WS--'75-'77 experimental work performed at DP site, waste not out of TA-55	TWCP-3545/P238-2	Process report describes activities as in TWCP-5707	C—meeting with SMEs indicate work performed under P/S code WS in '75-'77 was at another site, not TA-55, so waste did not ever become TA-55 owned. See attached meeting notes.
MTL	The older metalography operations(before 1992) used solvent (e.g. trichloroethane)	TWCP-3545/P238-2	Process report section 3.5 states Pu-238 processes at TA-55 used no organic solvents.	Process Report	Process report does not list any solvents.	C—meeting with SMEs indicated P/S code MTL did not begin until after 1992, so no trichloroethane would be in the waste post 1992. See attached meeting notes.
PTS	Indicates that P/S code PTS was associated with R and D research studies with Pu-238.	TWCP-3545/P238-2	Process report does not describe PTS	Process Report	PTS code not included in process report.	C—Pu-238 PTS operations were performed in another glovebox, therefore this waste would be in under another P/S code per John Musgrave. PTS is Pretreatment studies on LANL and RFETS material, it would be under nitrate operations. See attached meeting notes.
PI	P/S Code P1 should be taken from Pu-238 report and added to another report (report not referenced). Also indicates time line back to 1978	TWCP-3545/P238-20	P1 still discussed in this summary report Report timeline goes back to 1979.	Summary report	P1 P/S code is very similar to CHS and LWRHU and the waste streams would be the same. Therefore the P1 information should be moved to another report.	C—in meeting with SMEs, this statement meant that this information was in a previous Pu-238 draft report and needed to be included in this current report which it is. See attached meeting notes.

Item Identification*	AK No. 1	Source No. 1	AK No. 2	Source No. 2	Decision/Discrepancy	Rationale**
All	Leaded gloves were always separated	TWCP-3545/P238-2	Process report says prior to May 1992, lead gloves were discarded as metal debris and were not segregated from other metal wastes	Process Report, section 3.6.1		A—Process report is correct. The first statement is not correct per meeting with SMEs. See attached meeting notes.
General	Only lead contaminated debris is lead-lined gloves	TWCP-3545/P238-20	Cd, Cr, and Pb are typical impurity in Pu Oxide product	TWCP-1044	Process report, section 3.5 refers to 1044 stating there are no RCRA constituents. Questions remain if analytical data indicates they are below TCLP limits.	B—Gloves segregated after 1992 per Jim Foxx, but apply waste code to all P/S codes. See attached meeting notes. Analytical data in TWCP-2102 indicate below TCLP limits.
All	Two issues need to be resolved by R. Glenn—needing more info regarding electrode and electrode solutions; generators signing data package to confirm certain materials were not in the waste	TWCP-3545-P238-20	No discussion of either of these issues in the Process report	Process report		C—At the time TWCP-3545-P238-20 was documented, the P/S code was unknown. SMEs said that the correct P/S code was RSI and this refers to decontamination operations, which could have been performed two ways, using dilute mineral acid, or electrolyte ($MgCl_2$). No RCRA constituents. Issues are resolved. See attached meeting notes.

Sandy Wander — AK Investigator — Sandy Wander — 2/25/02
Evaluator (Print Name) — Title — Signature — Date

Pamela Rogers — Pamela Rogers — 2/26/02
SPM Review (Print Name) — Signature — Date

* Item identification can be PS Code, waste stream, drum ID, item ID, or other identification of items affected.
** Rationale code: [A=Professional Judgment; B=Most Conservative Decision; C=Other (specify)]

Source: TWCP-07907

TWCP/WRR
Document Modification/Review Cycle

Step 7 - Preparation for Document Control

☐ Revision
☒ Interim Change

Document ID: TWCP-AK-2.1-009 New Rev/IC: R.0/IC1

Preparer: Sandy Wander

Document Title:
Process Acceptable Knowledge Report for Plutonium-238 Operations at TA-55

Blank entries are Not Applicable items.

- ☒ Procedure number verified
- ☒ Procedure Title verified
- ☒ Procedure Revision/ AK-009 effective date 3/21/02 - posted to web on 3/28/02, delay in posting was due to pending response from CBFO per Jim Bailey.
- ☒ Pagination verified
- ☒ Document Header v
- ☒ Attachment Header
- ☐ Hazard Summary v RMDC 3/28/02
- ☒ Effective/Review Date/LAUR# on cover page
- ☐ Copy of final to Training/Signature Copies
- ☒ Signatures and Dates typed on cover page
- ☒ Revision History table reflect changes and effective date
- s have been marked as SAMPLE, if applicable
- s extracted for Web publishing
- onic files archived
- tte Prepared for Document Control
- ☒ Document Control packet contains signed original, diskette, DRR/Redline, review documentation

Document Tracking Closed ○ Open ◉ Closed Date to DC: 3/27/2002 Signed Initials: JJD

Step 8 - Document Control - Tracking and Web Conversion

Date Received: 3/28/02

- ☑ Verify Signatures
- ☑ Verify Effective Date cover/history
- ☑ Verify IC added to document (if applicable)
- ☑ Log into Database/Make Assignment
- ☑ Print Receipts/Cover sheets
- ☑ Copy document: 2
- ☑ Control Stations Updated - Date: 3/28/02
- ☑ Master Index Updated - Date: 3/28/02
- NA Archive old revision (Record)

- ☑ Capture Document: __ Word ✓ PDF
- NA Forms: __ Yes __ No
- ☑ Transfer to Web Server
- ☑ Quality check to Original
- ☑ Verify Signatures ✓ Signature Dates ✓
- ☑ Dates: ✓ Cover ✓ Rev. History ✓ Review Date
- ☑ Web Page TOC: ✓ No/Rev ✓ Effective Date ✓ LAUR ✓ Title ✓ Link ✓ Test
- ☑ On-line test: ✓ Open Doc
- ☑ Electronic Notification: ✓ Sent ✓ Printed
- NA CBFO: __ Electronic Copy __ Printed
- ☑ Change Control Notification ____ Sent ____ Printed ✓ NA

Date Completed: 3/28/02 Signed Initials: CBK

f pages are separated match to Document: TWCP-AK-2.1-009

TWCP/WRR
Document Modification/Review Cycle

Step 1: Register Document

Status: ○ Open ◉ Closed ☐ Revision ☒ Interim Change

Date Received: 3/21/2002

Current Rev/IC: R.0

Document ID: TWCP-AK-2.1-009

Rev/IC: R.0/IC1

Document Title:
Process Acceptable Knowledge Report for Plutonium-238 Operations at TA-55

Preparer: Sandy Wander

Date to DP Team: 3/21/2002

Step 2: Modification Cycle

Technical Reviewer:
(QA and Preparer)

Release for Review:

Comments:
03/27/02: Prepared document for transmittal to Document Control

Step 3: Preliminary Review Cycle

☒ IC - Not Applicable

Reviewer	Name	Sent Out	Returned	Comments

Comments:

TWCP/WRR
Document Modification/Review Cycle

Step 4: Comment Reconciliation Cycle ☒ IC - Not Applicable (enter action in comments section)

Reviewer Comments Incorporated:
Redline/DRR Given to Preparer:
Reconciled Comments Returned:
Modifications Made to Document:
Preparer Review of Modifications:
Signed/Release for Final Signature:

Comments:

Step 5: Final Signature Cycle ☒ IC - Not Applicable (enter action in comments section)

Signature	Position	Sent Out	Returned	Comments

Comments:

Step 6: External Review Cycle

Organization	Contact	Sent Out	Returned	Comments
Change Control	G M Polley	3/21/2002	3/25/2002	NA

Comments

To: rubyannf@lanl.gov, mlgarcia@lanl.gov
From: Patricia G Patton <pgp@lanl.gov>
Subject: Procedure Notification
Cc: fabi,bailey, lpc
Bcc:
Attached:

The following are revised AK reports.

Effective Date: 3/21/02

TWCP-AK-2.1-004,R.2/IC1 - Process Acceptable Knowledge Report for Miscellaneous Operations at TA-55 (LA-UR-02-1714)

TWCP-AK-2.1-005,R.2/IC1 - Process Acceptable Knowledge Report for Nitrate Operations at TA-55 (LA-UR-02-1715)

TWCP-AK-2.1-006,R.2/IC1 - Process Acceptable Knowledge Report for Pyrochemical Processes at TA-55 (LA-UR-02-1713)

TWCP-AK-2.1-007,R.2/IC1 - Process Acceptable Knowledge Report for Special Processing at TA-55 (LA-UR-02-1712)

TWCP-AK-2.1-009,R.0/IC1 - Process Acceptable Knowledge Report for Plutonium-238 Operations at TA-55 (LA-UR-02-1709)

~~~~**~~**~~**~~**~~**~~**~~**~~**~~**

Patricia G. Patton
Los Alamos National Laboratory
E-ET / TWCP
Records Management / Document Control
(RMDC)
557 Oppenheimer
TA-00 / bldg 764
MS M319
Phone: (505) 667-2071
Email: pgp@lanl.gov

~~~~**~~**~~**~~**~~**~~**~~**~~**~~**

LOS ALAMOS
NATIONAL LABORATORY - TWCP RMDC

Controlled Document Acknowledgment

Failure to return receipt by response date may result in removal from Distribution and/or placement on Supervised Work Activities for reciepients who are overseeing or performing work to this document.

Please Sign, Fold, and Return this Form

To: TWCP RMDC **Mail Stop: M 319** **Please Respond 4/11/2002**

TWCP-AK-2.1-009,R.0/IC1

Effective Date [redacted] **Doc_Source** TWCP **Doc_Status** FINAL **Entry No**

Document Title PROCESS ACCEPTABLE KNOWLEDGE REPORT FOR PLUTONIUM-238 OPERATIONS AT TA-55 (LA-UR-02-1709)

Document Comments

Work Stations	ID_No	Name	MS	Organization	Copy
☒ RMDC	N/A	?	?	?	
☐ WCRRF					
☐ RAMROD					
☐ RANT					
☐ DECON					
☒ QA					

Action Required:
Please sign receipt and return to **RMDC, M 319**. My Signature on this Form verifies that I have Received this Document.

___ Please remove me from the Controlled Distribution List. Since the contents of this document does not apply to our operation the document is being returned. (Not applicable for Controlled Stations)

To be signed by the Controlled Document Recipient or their designee.

Signature: Christina Penny Date: 3/28/02

TWCP/WRR
Document Modification/Review Cycle

Step 7: Preparation for Document Control

☒ Revision
☐ Interim Change

Document ID: TWCP-AK-2.1-009 New Rev/IC: R.0

Preparer: John Musgrave

Document Title:
Process Acceptable Knowledge Summary Report for Plutonium-238 Operations at TA-55

Blank entries are Not Applicable items.

- ☒ Procedure number verified
- ☒ Procedure Title verified
- ☒ Procedure Revision/IC verified
- ☒ Pagination verified
- ☒ Document Header verified
- ☒ Attachment Header verified
- ☐ Hazard Summary verified (if applicable)
- ☒ Effective/Review Date/LAUR# on cover page
- ☐ Copy of final to Training/Signature Copies
- ☒ Signatures and Dates typed on cover page
- ☒ Revision History table reflect changes and effective date
- ☐ Forms have been marked as SAMPLE
- ☐ Forms extracted for Web publishing
- ☒ Electronic files archived
- ☒ Diskette Prepared for Document Control
- ☒ Document Control packet contains signed original, diskette, DRR/Redline, review documentation

Document Tracking Closed ○ Open ◉ Closed Date to DC: 8/7/2001 Signed Initials: JS

Step 8: Document Control - Tracking and Web Conversion

Date Received: 8/7/01

- ☑ Verify Signatures
- ☑ Verify Effective Date cover/history
- N/A Verify IC added to document (if applicable)
- ☑ Log into Database/Make Assignment
- ☑ Print Receipts/Cover sheets
- ☑ Copy document: 2
- ☑ Control Stations Updated - Date: 8/7/01
- ☑ Master Index Updated - Date: 8/7/01
- N/A Archive old revision (Record)

- ☑ Capture Document: __ Word ✓ PDF
- ☑ Forms: __ Yes ✓ No
- ☑ Transfer to Web Server
- ☑ Quality check to Original
- ☑ Verify Signatures ___ ✓ Signature Dates ___
- ☑ Dates: ✓ Cover ✓ Rev. History ___ Review Date
- N/A Add: Controlled Document Original Signatures on File at the RMDC
- N/A Security Set for: ____ Read Only
- ☑ Web Page TOC: ✓ No/Rev ✓ Effective Date N/A LAUR ✓ Title ✓ Link ✓ Test
- ☑ On-line test: ✓ Open Doc N/A Password
- ☑ Electronic Notification: ✓ Sent ✓ Printed
- ☑ CAO: ✓ Electronic Copy ✓ Printed

Date Completed: 8/7/01 Signed Initials: [illegible]

TWCP/WRR
Document Modification/Review Cycle

Step 4: Comment Reconciliation Cycle ☐ IC - Not Applicable (enter action if requirements applicable)

Reviewer Comments Incorporated: .....

Redline/DRR Given to Preparer: .....

Reconciled Comments Returned: .....

Modifications Made to Document: .....

Preparer Review of Modifications: .....

Signed/Release for Final Signature: .....

Comments: .....

Step 5: Final Signature Cycle ☐ IC - Not Applicable (enter action if requirements applicable)

Signature	Position	Sent Out	Returned	Comments
J. Fabryka-Martin	Technical	7/3/2001	7/3/2001	Independent Technical Reviewer/Editor
M. Lin	SPM	7/18/2001	7/18/2001	Site Project Manager
B. Humphrey	QA	7/18/2001	7/19/2001	Waste Certification Official
M. Gavett	QA	7/19/2001	7/27/2001	Site Project QA Officer
A. Montoya	Fac Mgr	7/3/2001	7/18/2001	Facility Representative

Comments:

Step 6: External Review Cycle

Organization	Contact	Sent Out	Returned	Comments

Comments

TWCP/WRR
Document Modification/Review Cycle

Step 1: Receipt of Document

Status: ○ Open ◉ Closed

☒ Revision
☐ Interim Change

Date Received: 12/1/2000

Current Rev/IC: -

Document ID: TWCP-AK-2.1-009

Rev/IC: R.0

Document Title:
Process Acceptable Knowledge Summary Report for Plutonium-238 Operations at TA-55

Preparer: John Musgrave

Date to DP Team: 12/1/2000

Step 2: Modification Cycle

Technical Reviewer:
(QA and Preparer)

Release for Review:

Comments:

Step 3: Preliminary Review Cycle

☐ IC - Not Applicable (change section in comments below)

Reviewer	Name	Sent Out	Returned	Comments

Comments:

X-Sender: 102484@mail-48.lanl.gov
Date: Mon, 6 Aug 2001 09:17:30 -0600
To: "James D. Bailey" <bailey@lanl.gov>
From: John Musgrave <jmusgrave@lanl.gov>
Subject: LA-UR
X-RCPT-TO: <154344@empo.lanl.gov>

Jim,
The LA-UR Number for the Pu-238 Process Report is LA-UR-01-4200.

John

To: rubyannf@lanl.gov, mlgarcia@lanl.gov
From: Patricia G Patton <pgp@lanl.gov>
Subject: For Training Distribution
Cc: fabi@lanl.gov
Bcc:
Attached:

The following is a new procedure.

TWCP-AK-2.1-009,R.0 - Process Acceptable Knowledge Summary Report for Plutonium-238 Operations at TA-55

~~~~**~~**~~**~~**~~**~~**~~**~~**~~**~~**~~**

Patricia G. Patton

Los Alamos National Laboratory
E-ET
Records Management / Document Control
(RMDC)
TA-0
557 Oppenheimer Building 764
Phone: (505) 667-2071
Email: pgp@lanl.gov

~~~~**~~**~~**~~**~~**~~**~~**~~**~~**~~**~~**~~**

To: wipp.notify@wipp.carlsbad.nm.us
From: Patricia G Patton <pgp@lanl.gov>
Subject: [Procedure]
Cc: Tammy.Bowden@wipp.carlsbad.nm.us
Bcc: fl@lanl.gov
Attached: \\twcp-web\Pages\twcp\RMDC\AK\TWCP-AK-2.1-009\TWCP-AK-2.1-009R0.pdf;

The following is a new procedure.

TWCP-AK-2.1-009,R.0 - Process Acceptable Knowledge Summary Report for Plutonium-238 Operations at TA-55

~~~~**~~**~~**~~**~~**~~**~~**~~**~~**~~**~~**

Patricia G. Patton

Los Alamos National Laboratory
E-ET
Records Management / Document Control
(RMDC)
TA-0
557 Oppenheimer Building 764
Phone: (505) 667-2071
Email: pgp@lanl.gov

~~~~**~~**~~**~~**~~**~~**~~**~~**~~**~~**~~**~~**

LOS ALAMOS
NATIONAL LABORATORY - TWCP RMDC

Controlled Document Acknowledgment

Failure to return receipt by response date may result in removal from Distribution and/or placement on Supervised Work Activities for reciepients who are overseeing or performing work to this document.

Please Sign, Fold, and Return this Form

To: TWCP RMDC **Mail Stop: M 319** **Please Respond 8/21/2001**

TWCP-AK-2.1-009,R.0

Effective Date 8-7-2001 **Doc_Source** AK **Doc_Status** FINAL **Entry No**

Document Title PROCESS ACCEPTABLE KNOWLEDGE SUMMARY REPORT FOR PLUTONIUM-238 OPERATIONS AT TA-55 (LA-UR-01-4200)

Document Comments

Work Stations	ID_No	Name	MS	Organization	Copy
☒ RMDC	N/A	?	?	?	
☐ WCRRF					
☐ RAMROD					
☐ RANT					
☐ DECON					
☒ QA					

Action Required:

Please sign receipt and return to **RMDC, M 319**. My Signature on this Form verifies that I have Received this Document.

___ Please remove me from the Controlled Distribution List. Since the contents of this document does not apply to our operation the document is being returned. (Not applicable for Controlled Stations)

To be signed by the Controlled Document Recipient or their designee.

Signature: _____ Date: 8/7/01

Code	Description*
LA 116G	Waste is packaged in a 55-gallon drum, an SWB, or a TDOP within plastic bags that have been breached upon repackaging. The punctured bags are not considered to be part of the packaging; therefore, there are no layers of confinement. Oversized waste items may be wrapped in plastic and placed in an SWB or a TDOP. No closed liner bags are used in the SWB or TDOP.
LA 216H	Waste is packaged in a maximum of three layers of inner plastic bags. Bagged out items are placed in a 55-gallon drum lined with a maximum of two polyethylene liner bags. All bag closures are by the twist and tape method, or the twist, tie, and tape method.

*If drums are overpacked in an SWB or in a TDOP, no closed liner bags are used in the SWB or TDOP.

Specific waste packaging configurations for the codes and corresponding shipping categories are shown in the following table:

WASTE PACKAGING CONFIGURATION TABLE

Code	Layers of Confinement	Hydrogen Diffusivity of Filter on Primary Payload Container* (mol/s/mol fraction) (x 10^{-6})	Shipping Category			
			Drum	SWB Overpack	SWB	Direct Load TDOP
LA 116A LA 216A	Maximum of 4 plastic bag layers, two of which are liner bags	1.9	30 0340 0528	30 0340 0568	N/A	N/A
		3.7	30 0340 0502	30 0340 0542	N/A	N/A
LA 116B LA 216B	Maximum of 2 filtered plastic bag layers, both of which are inner bags	1.9	30 0340 0145	---	N/A	N/A
		3.7	30 0340 0120	—	N/A	N/A
LA 116C LA 216C	Maximum of 1 plastic bag layer, which is an inner bag	1.9	30 0340 0306	30 0340 0346	N/A	N/A
		3.7	30 0340 0280	30 0340 0320	N/A	N/A
LA 116D LA 216D	Maximum of 2 plastic bag layers, both of which are inner bags	1.9	30 0340 0485	30 0340 0525	N/A	N/A
		3.7	30 0340 0459	30 0340 0499	N/A	N/A
LA 116E LA 216E	Maximum of 1 filtered plastic bag layer, which is an inner bag	1.9	30 0340 0136	---	N/A	N/A
		3.7	30 0340 0110	—	N/A	N/A

Code	Layers of Confinement	Hydrogen Diffusivity of Filter on Primary Payload Container* (mol/s/mol fraction) (x 10^{-6})	Shipping Category			
			Drum	SWB Overpack	SWB	Direct Load TDOP
LA 116F LA 216F	Maximum of 1 filtered plastic bag layer, which is a liner bag	1.9	30 0340 0133	—	N/A	N/A
		3.7	30 0340 0108	—	30 0340 0034	N/A
LA 116G	No layers of confinement	1.9	30 0340 0127	30 0340 0166	N/A	N/A
		3.7	30 0340 0101	30 0340 0141	30 0340 0028	30 0340 0013
LA 216H	Maximum of 5 plastic bag layers, two of which are liner bags	1.9	30 0340 0707	30 0340 0747	N/A	N/A
		3.7	30 0340 0681	30 0340 0721	N/A	N/A

* See Introduction for explanation of hydrogen diffusivity of filter on primary payload container.
N/A Not Applicable
--- Not Used

ASSAY: Drums are assayed by means of a neutron or gamma counter according to written procedures. The instrument used depends on the matrix and nuclide content of the drum. SWBs and TDOPs are assayed by means of portable nondestructive assay hold-up system according to written procedures. The results of the assay are expressed in terms of grams of each radionuclide present. Assay results are used to calculate Pu-239 fissile gram equivalent (plus 2 times the error), plutonium equivalent curies (plus error), and decay heat (plus error).

FREE LIQUIDS: Visual inspections of each waste item for free liquids are performed in accordance with written procedures. Special emphasis during waste inspection is always applied to containers such as bottles and cans. Real-time radiography (RTR) examination of a sample of these drums may be performed to verify that free liquids are not present.

EXPLOSIVE/COMPRESSED GASES: Explosives are prohibited at TA-03-29, TA-48, and TA-50-1; and in TA-55 waste. Only used pressure vessels or spray cans could potentially contain gases under pressure and they are blocked open, punctured, completely flattened, or cut in half in accordance with written procedures.

PYROPHORIC: No pyrophoric materials will be present as determined by visual inspection of each waste item in accordance with written procedures.

CORROSIVES: Visual inspections of each waste item for corrosive materials are performed in accordance with written procedures. Corrosive materials identified during this inspection are either neutralized or diverted from the waste stream.

CHEMICAL COMPATIBILITY: A chemical compatibility study has been performed on this content code, and all waste is chemically compatible for materials in greater than trace (>1% weight) quantities. The chemicals found in this content code are attached and are restricted to the allowable chemical lists for each waste material type found in Appendix 1.3.7 of the SAR.

TA-55-21/22 Low Wattage Drums
with Characterization Complete
as of 7/9/2001

	A	B	C	D	E	F	G	H	I	J	K	L	M	N	O
1	Drum ID	BDRs Complete	Waste Stream	Package Date	RTR Data Package	FRAM Data Package	Assay Data Package	HGAS Data Package	Process Status Codes	RTR Layers of Packaging	TRUCON Determination	Shipping Category	TRUCON Wattage Limit	Shipping Wattage	Over Wattage?
2	52463	4	TA-55-22	9/15/1989	LA00-RTR-023	LA01-FRAM-001	LA01-HENC-001	LA01-HGAS-003	COD	2 or Fewer	LA117D	20 0170 0459	.0618	0.00703	ok
3	52975	4	TA-55-21	6/22/1990	LA00-RTR-024	LA01-FRAM-001	LA01-HENC-001	LA01-HGAS-006	WM	3 or Fewer	LA117H	20 0170 0681	.0417	0.00336	ok
4	54307	4	TA-55-21	1/31/1991	LA00-RTR-023	LA01-FRAM-005	LA01-HENC-005	LA01-HGAS-009	RR	3 or Fewer	LA117H	20 0170 0681	.0417	0.00621	ok
5	54494	4	TA-55-21	5/30/1991	LA00-RTR-028	LA01-FRAM-002	LA01-HENC-001	LA01-HGAS-006	X0	3 or Fewer	LA117H	20 0170 0681	.0417	0.00074	ok
6	54571	4	TA-55-21	9/18/1991	LA01-RTR-001	LA01-FRAM-002	LA01-HENC-001	LA01-HGAS-006	SO	Indeterminate	LA117D	20 0170 0459	.0618	0.00153	ok
7	54582	4	TA-55-21	9/23/1991	LA01-RTR-001	LA01-FRAM-002	LA01-HENC-001	LA01-HGAS-006	CV	Indeterminate	LA117D	20 0170 0459	.0618	0.00790	ok
8	54677	4	TA-55-21	5/11/1992	LA01-RTR-001	LA01-FRAM-002	LA01-HENC-001	LA01-HGAS-006	VUL	3 or Fewer	LA117H	20 0170 0681	.0417	0.00333	ok
9	54703	4	TA-55-21	10/24/1991	LA01-RTR-002	LA01-FRAM-002	LA01-HENC-001	LA01-HGAS-006	LR	2 or Fewer	LA117D	20 0170 0459	.0618	0.00189	ok
10	54737	4	TA-55-21	1/29/1992	LA01-RTR-002	LA01-FRAM-002	LA01-HENC-001	LA01-HGAS-006	NC	2 or Fewer	LA117D	20 0170 0459	.0618	0.00672	ok
11	54754	4	TA-55-21	2/6/1992	LA01-RTR-001	LA01-FRAM-002	LA01-HENC-001	LA01-HGAS-006	X0	3 or Fewer	LA117H	20 0170 0681	.0417	0.01366	ok
12									NC						
13	54924	4	TA-55-21	11/5/1990	LA00-RTR-023	LA01-FRAM-005	LA01-HENC-004	LA01-HGAS-009	RR	1	LA117B	20 0170 0280	.1014	0.00559	ok
14	54959	4	TA-55-21	12/6/1990	LA00-RTR-026	LA01-FRAM-003	LA01-HENC-002	LA01-HGAS-008	CX	2 or Fewer	LA117D	20 0170 0459	.0618	0.00176	ok
15	52039	3	TA-55-21	10/7/1992	LA01-RTR-008	LA01-FRAM-011	LA01-HENC-008	LA01-HGAS-022	WM	3 or Fewer	LA117H	20 0170 0681	.0417	0.00304	ok
16	52193	3	TA-55-21	3/27/1989	LA01-RTR-010	LA01-FRAM-007	LA01-HENC-006	LA01-HGAS-017	X0	3 or Fewer	LA117H	20 0170 0681	.0417	0.00528	ok
17	52320	3	TA-55-21	1/25/1990	LA01-RTR-009	LA01-FRAM-007	LA01-HENC-006	LA01-HGAS-017	unk	2 or Fewer	LA117D	20 0170 0459	.0618	0.00301	ok
18									CX						
19	52344	3	TA-55-21	2/16/1990	LA01-RTR-010	LA01-FRAM-007	LA01-HENC-006	LA01-HGAS-017	WM	3 or Fewer	LA117H	20 0170 0681	.0417	0.01200	ok
20									CSE						
21	52383	3	TA-55-21	3/28/1989	LA01-RTR-010	LA01-FRAM-007	LA01-HENC-006	LA01-HGAS-017	X0	3 or Fewer	LA117H	20 0170 0681	.0417	0.00653	ok
22	52566	3	TA-55-21	8/14/1989	LA01-RTR-009	LA01-FRAM-011	LA01-HENC-009	LA01-HGAS-027	WM	3 or Fewer	LA117H	20 0170 0681	.0417	0.01288	ok
23									unk						
24									RCM						
25									NC						
26									MP						
27									LR						
28									EV						
29									CW						
30	53548	3	TA-55-21	12/9/1988	LA01-RTR-010	LA01-FRAM-007	LA01-HENC-006	LA01-HGAS-027	NC	3 or Fewer	LA117H	20 0170 0681	.0417	0.00707	ok
31									LR						
32	54125	3	TA-55-21	8/21/1990	LA00-RTR-024	LA01-FRAM-005	LA01-HENC-004	LA01-HGAS-017	CSE	3 or Fewer	LA117H	20 0170 0681	.0417	0.00629	ok
33	54132	3	TA-55-21	8/21/1990	LA01-RTR-003	LA01-FRAM-016	LA01-HENC-014	LA01-HGAS-025	ML	3 or Fewer	LA117H	20 0170 0681	.0417	0.01884	ok
34									EV						
35									CSE						
36	54365	3	TA-55-21	4/24/1991	LA00-RTR-028	LA01-FRAM-015	LA01-HENC-013	LA01-HGAS-025	fE	2 or Fewer	LA117D	20 0170 0459	.0618	0.00060	ok
37	54441	3	TA-55-21	5/28/1991	LA01-RTR-003	LA01-FRAM-016	LA01-HENC-014	LA01-HGAS-026	WM	3 or Fewer	LA117H	20 0170 0681	.0417	0.00417	ok
38	54444	3	TA-55-21	5/28/1991	LA01-RTR-002	LA01-FRAM-016	LA01-HENC-014	LA01-HGAS-027	WM	3 or Fewer	LA117H	20 0170 0681	.0417	0.00140	ok
39									unk						
40	54466	3	TA-55-21	2/1/1990	LA00-RTR-026	LA01-FRAM-015	LA01-HENC-013	LA01-HGAS-025	X0	3 or Fewer	LA117H	20 0170 0681	.0417	0.00745	ok
41									unk						
42	54471	3	TA-55-21	5/23/1991	LA01-RTR-002	LA01-FRAM-016	LA01-HENC-014	LA01-HGAS-021	X0	Indeterminate	LA117H	20 0170 0681	.0417	0.00349	ok
43	54714	3	TA-55-21	12/2/1991	LA01-RTR-001	LA01-FRAM-015	LA01-HENC-013	LA01-HGAS-027	EV	3 or Fewer	LA117H	20 0170 0681	.0417	0.00105	ok
44	54757	3	TA-55-21	2/13/1992	LA00-RTR-028	LA01-FRAM-015	LA01-HENC-013	LA01-HGAS-025	X0	3 or Fewer	LA117H	20 0170 0681	.0417	0.00750	ok
45	54780	3	TA-55-21	10/7/1992	LA00-RTR-024	LA01-FRAM-005	LA01-HENC-004	LA01-HGAS-018	X0	3 or Fewer	LA117H	20 0170 0681	.0417	0.01121	ok
46	54814	3	TA-55-21	11/5/1990	LA00-RTR-024	LA01-FRAM-004	LA01-HENC-004	LA01-HGAS-016	RR	3 or Fewer	LA117H	20 0170 0681	.0417	0.00668	ok
47	54815	3	TA-55-22	11/19/1990	LA00-RTR-025	LA01-FRAM-004	LA01-HENC-004	LA01-HGAS-018	RCM	3 or Fewer	LA117H	20 0170 0681	.0417	0.00332	ok
48	54966	3	TA-55-22	12/6/1990	LA00-RTR-023	LA01-FRAM-005	LA01-HENC-004	LA01-HGAS-017	RCM	2 or Fewer	LA117D	20 0170 0459	.0618	0.00449	ok
49	54967	3	TA-55-21	12/6/1990	LA00-RTR-024	LA01-FRAM-005	LA01-HENC-004	LA01-HGAS-028	CX	3 or Fewer	LA117H	20 0170 0681	.0417	0.00037	ok
50	54968	3	TA-55-21	1/9/1991	LA00-RTR-023	LA01-FRAM-005	LA01-HENC-004	LA01-HGAS-017	RR	2 or Fewer	LA117D	20 0170 0459	.0618	0.00089	ok
51	55179	3	TA-55-22	2/3/1994	LA01-RTR-010	LA01-FRAM-014	LA01-HENC-012	LA01-HGAS-022	MAG	3 or Fewer	LA117H	20 0170 0681	.0417	0.00407	ok
52	55208	3	TA-55-21	4/29/1993	LA00-RTR-024	LA01-FRAM-015	LA01-HENC-014	LA01-HGAS-028	CX	3 or Fewer	LA117H	20 0170 0681	.0417	0.00798	ok
53	55436	3	TA-55-21	7/7/1994	LA01-RTR-012	LA01-FRAM-015	LA01-HENC-013	LA01-HGAS-028	EV	3 or Fewer	LA117H	20 0170 0681	.0417	0.00048	ok
54	55487	3	TA-55-21	11/30/1994	LA01-RTR-012	LA01-FRAM-012	LA01-HENC-010	LA01-HGAS-015	X0	2 or Fewer	LA117D	20 0170 0459	.0618	0.00133	ok
55	55541	3	TA-55-21	6/19/1994	LA01-RTR-013	LA01-FRAM-012	LA01-HENC-009	LA01-HGAS-017	ME	2 or Fewer	LA117D	20 0170 0459	.0618	0.00095	ok
56	55572	3	TA-55-21	11/30/1994	LA01-RTR-013	LA01-FRAM-012	LA01-HENC-009	LA01-HGAS-028	EV	3 or Fewer	LA117H	20 0170 0681	.0417	0.00468	ok
57	55633	3	TA-55-21	2/22/1995	LA01-RTR-008	LA01-FRAM-011	LA01-HENC-008	LA01-HGAS-026	X0	0	LA117B	20 0170 0280	.1014	0.00193	ok
58	55657	3	TA-55-21	2/22/1995	LA01-RTR-010	LA01-FRAM-014	LA01-HENC-012	LA01-HGAS-022	X0	0	LA117B	20 0170 0280	.1014	0.00106	ok
59	56013	3	TA-55-21	4/25/1996	LA01-RTR-012	LA01-FRAM-013	LA01-HENC-010	LA01-HGAS-017	CF	3 or Fewer	LA117H	20 0170 0681	.0417	0.00650	ok
60	56025	3	TA-55-21	5/1/1996	LA01-RTR-012	LA01-FRAM-013	LA01-HENC-010	LA01-HGAS-014	EV	3 or Fewer	LA117H	20 0170 0681	.0417	0.01935	ok
61	56626	3	TA-55-21	2/25/1996	LA01-RTR-015	LA01-FRAM-015	LA01-HENC-013	LA01-HGAS-024	EV	3 or Fewer	LA117H	20 0170 0681	.0417	0.01471	ok
62	56826	3	TA-55-21	2/16/1996	LA01-RTR-015	LA01-FRAM-010	LA01-HENC-008	LA01-HGAS-029	SL	3 or Fewer	LA117H	20 0170 0681	.0417	0.00249	ok

05384
05379
05384
05384
05384
05384
05384
05384
05384
05113
05380

Attachment 3 - Acceptable Knowledge Source Document Summary

Site(s): Los Alamos National Laboratory	Source Document Tracking Number: DR036

Waste Stream Number(s): LA-CIN01.001, LA-MHD01.001, LA-MIN02-V.001, LA-MIN04-S.001

(Applicable only when site library is not in use)

Acceptable Knowledge Documentation Type:	Category:
☑ TRU Waste Management Program Information	☐ C - Correspondence
☑ Waste Stream-Specific Information	☐ D - Documents
☐ Additional Information	☐ M - Miscellaneous
	☐ P - Procedures
	☑ DR - Discrepancy Resolution
	☐ U - Unpublished Documents

Title or Description of Source Document [a]: Suspected Nitrate Salt Containers

Source Document Reference Information (author(s), document and revision number, date, publisher): Randy Fitzgerald, NA, Rev. NA, 01/03/2013, P2010-3381

AK # [b]	Source Doc. Page # [c]	AK Information Summary
PR6, WS1, WS3	Throughout	As a result of new AK information received from the waste generated, 48 containers that were on the June 22, 2009 AK Tracking spreadsheet (AKTSS) were placed on HOLD because it was suspected that these 48 containers were non-cemented nitrate salts that might warrant re-assignment to another waste stream. Based on the potential changes to the AK waste stream of these containers, an NCR was written. In 2012, LANL provided CCP AK with an updated list with 291 suspected nitrate salt containers. Resolution: All 291 container and/or their repackaged daughters, as appropriate, will be re-evaluated and re-assigned to waste stream LA-MIN02-V.001 (absorbed waste). These 291 container will be further processed by LANL prior to characterization and shipment to WIPP.

Source Document Data Limitations (If any):

1. None.

Acceptable Knowlege Expert:

Amy Johns Amy Johns Date: 1/22/2013
Print /Sign

[a] Provide description for non-titled information (i.e., container paperwork, MSDS sheets, etc)
[b] Obtain from Acceptable Knowledge Documentation Checklist
[c] For microfilm or microfiche, identify box, tape, reel number and location.

CCP RECORDS ORIGINAL
DATE REC'D 2-4-2013

Attachment 11 – Acceptable Knowledge Source Document Discrepancy Resolution

P2010 - 3381
Page 1 of 2

Waste Stream Number(s): LA-MHD01.001, LA-CIN01.001, LA-MIN02-V.001, LA-MIN04-S.001 (CCP-AK-LANL-006)

Waste Stream Descriptions: Heterogeneous Debris, Cemented TRU Waste, Absorbed Waste, Salt Waste

AK Source Document Discrepancy Form Tracking Number: AK6 DR036 – Suspected Nitrate Salt Containers

Tracking #	Category[a]	Title	Document/Rev#	Author	Date	Publisher	Page #
	Pub.	CCP AK Summary Report for LANL TA-55 Mixed TRU Waste	CCP-AK-LANL-006, Rev. 12	M. Ramirez	12/12/2012	CCP	ALL
	Unpub.	CCP Non-Conformance Report	NCR-LANL-0509-09, Rev. 0	R. Fitzgerald	6/22/2009	CCP	ALL

NATURE OF DISCREPANCY:

As a result of new AK information received from the waste generator (i.e., TA-55 Cement Fixation Group), forty-eight (48) containers that were on the June 22, 2009 AK Tracking Spreadsheet (AKTSS) were placed on HOLD because it was suspected that these 48 containers were non-cemented nitrate salts that might warrant re-assignment to another waste stream. Based on the potential changes to the AK waste stream of these containers, an NCR was written in accordance with CCP-TP-005, Sec. 4.8.1, Rev. 18. In 2012, LANL provided CCP AK with an updated list with two-hundred and ninety-one (291) suspected nitrate salt containers.

RESOLUTION: See Attachment 1, Summary/History of Suspected Nitrate Salt Containers

Initially, 48 containers were assigned to NCR-LANL-0509-09, R.0. These 48 containers were removed from the AKTSS and returned to LANL for further evaluation; and the NCR was closed. In 2012, after a thorough review of the LANL Engineering database, which CCP AK does not have access to due to potentially sensitive information; LANL provided a list of 291 suspected nitrate salt containers – See Attachment 1. These containers were originally assigned to CCP-AK-LANL-006 waste streams LA-MHD01.001, LA-CIN01.001 and LA-MIN04-S.001 based on information from the TRU Waste Storage Records (TWSRs) and TA-54 database. In addition, repackaged containers and the associated repackage dates are indicated on Attachment 1.

Forty (40) of the original 48 included in NCR-LANL-0509-09, R.0 were also included in the LANL list of 291; and the remaining eight (8) containers were NOT included in the LANL list of 291 nitrate salt containers. These 8 containers were evaluated by LANL and LANL determined they should remain in their existing waste streams (i.e., they didn't contain nitrate salts). In addition to the 40 nitrate salt containers that were included in NCR-LANL-0509-09, R.0, two hundred and fifty-one (251) additional containers were identified by LANL as nitrate salt containers.

All 291 containers and/or their repackaged daughters, as appropriate, will be re-evaluated and re-assigned to waste stream LA-MIN02-V.001 (absorbed waste). These 291 containers will be further processed by LANL prior to characterization and shipment to WIPP.

CCP RECORDS ORIGINAL
DATE REC'D 2/4/2013

Discrepancy Resolved:	[X] Yes [ ] No		
Acceptable Knowledge Expert:	Randy Fitzgerald Print	Amy Johns for Randy Fitzgerald Sign	Date: 1/3/2013
Site Project Manager:	Terri-Anne Groover Print	Terri-Anne Groover Sign	Date: ~~1/3/2013~~ 1/10/13 1/10/13

[a]Published Document or Controlled Database (Pub.); Unpublished Data (Unpub.); Internal Procedure or Note (Proc.); Correspondence (Corr.) or Discrepancy (Disc.)

Attachment 1
LANL List of 291 Nitrate Salt Containers
NCR-LANL-0509-09, R.0
AK6 DR036

	PKG_ID	Original ID	Container Type	Waste Stream	Container History	RPKGD DAUGHTERS	RPKGD DATE
1	**S841239**	S841239	85-GAL	LA-MHD01.001	INCLUDED in NCR-LANL-0509-09, R.0 AND **W+A1ILL BE RE-EVALUATED AND RE-ASSIGNED** TO LA-MIN02-V.001 **because it was included on the LANL list of 291 nitrate salt containers.**	N/A	N/A
2	**S841240**	S841240	55-GAL	LA-MHD01.001	INCLUDED in NCR-LANL-0509-09, R.0 AND **WILL BE RE-EVALUATED AND RE-ASSIGNED** TO LA-MIN02-V.001 **because it was included on the LANL list of 291 nitrate salt containers.**	N/A	N/A
3	**S841251**	S841251	85-GAL	LA-MHD01.001	INCLUDED in NCR-LANL-0509-09, R.0 AND **WILL BE RE-EVALUATED AND RE-ASSIGNED** TO LA-MIN02-V.001 **because it was included on the LANL list of 291 nitrate salt containers.**	N/A	N/A
4	**S841314**	S841314	55-GAL	LA-MHD01.001	INCLUDED in NCR-LANL-0509-09, R.0 AND **WILL BE RE-EVALUATED AND RE-ASSIGNED** TO LA-MIN02-V.001 **because it was included on the LANL list of 291 nitrate salt containers.**	N/A	N/A
5	**S841320**	S841320	55-GAL	LA-MHD01.001	INCLUDED in NCR-LANL-0509-09, R.0 AND **WILL BE RE-EVALUATED AND RE-ASSIGNED** TO LA-MIN02-V.001 **because it was included on the LANL list of 291 nitrate salt containers.**	N/A	N/A
6	**S841627**	S841627	85-GAL	LA-CIN01.001	INCLUDED in NCR-LANL-0509-09, R.0 AND **WILL BE RE-EVALUATED AND RE-ASSIGNED** TO LA-MIN02-V.001 **because it was included on the LANL list of 291 nitrate salt containers.**	N/A	N/A
7	**S842213**	S842213	55-GAL	LA-MHD01.001	INCLUDED in NCR-LANL-0509-09, R.0 AND **WILL BE RE-EVALUATED AND RE-ASSIGNED** TO LA-MIN02-V.001 **because it was included on the LANL list of 291 nitrate salt containers.**	N/A	N/A
8	**S842463**	S842463	55-GAL	LA-MHD01.001	INCLUDED in NCR-LANL-0509-09, R.0 AND **WILL BE RE-EVALUATED AND RE-ASSIGNED** TO LA-MIN02-V.001 **because it was included on the LANL list of 291 nitrate salt containers.**	N/A	N/A

9	**S842526**	S842526	85-GAL	LA-MHD01.001	INCLUDED in NCR-LANL-0509-09, R.0 AND **WILL BE RE-EVALUATED AND RE-ASSIGNED** TO LA-MIN02-V.001 **because it was included on the LANL list of 291 nitrate salt containers.**	N/A	N/A
10	**S842528**	S842528	85-GAL	LA-MHD01.001	INCLUDED in NCR-LANL-0509-09, R.0 AND **WILL BE RE-EVALUATED AND RE-ASSIGNED** TO LA-MIN02-V.001 **because it was included on the LANL list of 291 nitrate salt containers.**	N/A	N/A
11	**S843528**	S843528	55-GAL	LA-MHD01.001	INCLUDED in NCR-LANL-0509-09, R.0 AND **WILL BE RE-EVALUATED AND RE-ASSIGNED** TO LA-MIN02-V.001 **because it was included on the LANL list of 291 nitrate salt containers.**	N/A	N/A
12	**S843593**	S843593	55-GAL	LA-CIN01.001	INCLUDED in NCR-LANL-0509-09, R.0 AND **WILL BE RE-EVALUATED AND RE-ASSIGNED** TO LA-MIN02-V.001 **because it was included on the LANL list of 291 nitrate salt containers.**	N/A	N/A
13	**S843594**	S843594	55-GAL	LA-CIN01.001	INCLUDED in NCR-LANL-0509-09, R.0 AND **WILL BE RE-EVALUATED AND RE-ASSIGNED** TO LA-MIN02-V.001 **because it was included on the LANL list of 291 nitrate salt containers.**	N/A	N/A
14	**S843672**	S843672	85-GAL	LA-CIN01.001	INCLUDED in NCR-LANL-0509-09, R.0 AND **WILL BE RE-EVALUATED AND RE-ASSIGNED** TO LA-MIN02-V.001 **because it was included on the LANL list of 291 nitrate salt containers.**	N/A	N/A
15	**S843673**	S843673	85-GAL	LA-CIN01.001	INCLUDED in NCR-LANL-0509-09, R.0 AND **WILL BE RE-EVALUATED AND RE-ASSIGNED** TO LA-MIN02-V.001 **because it was included on the LANL list of 291 nitrate salt containers.**	N/A	N/A
16	**90875**	S844213	POC	LA-MHD01.001	PARENT INCLUDED in NCR-LANL-0509-09, R.0 AND DAUGHTER **WILL BE RE-EVALUATED AND RE-ASSIGNED** TO LA-MIN02-V.001 **because it was included on the LANL list of 291 nitrate salt containers.**	92147, 92148	10/2/2012
17	**S844215**	S844215	85-GAL	LA-MHD01.001	INCLUDED in NCR-LANL-0509-09, R.0 AND **WILL BE RE-EVALUATED AND RE-ASSIGNED** TO LA-MIN02-V.001 **because it was included on the LANL list of 291 nitrate salt containers.**	N/A	N/A

18	**S844253**	S844253	85-GAL	LA-MHD01.001	INCLUDED in NCR-LANL-0509-09, R.0 AND **WILL BE RE-EVALUATED AND RE-ASSIGNED** TO LA-MIN02-V.001 **because it was included on the LANL list of 291 nitrate salt containers.**	N/A	N/A
19	**S844573**	S844573	55-GAL	LA-MHD01.001	INCLUDED in NCR-LANL-0509-09, R.0 AND **WILL BE RE-EVALUATED AND RE-ASSIGNED** TO LA-MIN02-V.001 **because it was included on the LANL list of 291 nitrate salt containers.**	N/A	N/A
20	**S844602**	S844602	85-GAL	LA-CIN01.001	INCLUDED in NCR-LANL-0509-09, R.0 AND **WILL BE RE-EVALUATED AND RE-ASSIGNED** TO LA-MIN02-V.001 **because it was included on the LANL list of 291 nitrate salt containers.**	N/A	N/A
21	**S844684**	S844684	85-GAL	LA-MHD01.001	INCLUDED in NCR-LANL-0509-09, R.0 AND **WILL BE RE-EVALUATED AND RE-ASSIGNED** TO LA-MIN02-V.001 **because it was included on the LANL list of 291 nitrate salt containers.**	N/A	N/A
22	**S844689**	S844689	55-GAL	LA-MHD01.001	INCLUDED in NCR-LANL-0509-09, R.0 AND **WILL BE RE-EVALUATED AND RE-ASSIGNED** TO LA-MIN02-V.001 **because it was included on the LANL list of 291 nitrate salt containers.**	N/A	N/A
23	**S845031**	S845031	55-GAL	LA-MHD01.001	INCLUDED in NCR-LANL-0509-09, R.0 AND **WILL BE RE-EVALUATED AND RE-ASSIGNED** TO LA-MIN02-V.001 **because it was included on the LANL list of 291 nitrate salt containers.**	N/A	N/A
24	**S845072**	S845072	55-GAL	LA-MHD01.001	INCLUDED in NCR-LANL-0509-09, R.0 AND **WILL BE RE-EVALUATED AND RE-ASSIGNED** TO LA-MIN02-V.001 **because it was included on the LANL list of 291 nitrate salt containers.**	N/A	N/A
25	**S845104**	S845104	55-GAL	LA-MHD01.001	INCLUDED in NCR-LANL-0509-09, R.0 AND **WILL BE RE-EVALUATED AND RE-ASSIGNED** TO LA-MIN02-V.001 **because it was included on the LANL list of 291 nitrate salt containers.**	N/A	N/A
26	**90892**	S845201	55-GAL	LA-MHD01.001	PARENT INCLUDED in NCR-LANL-0509-09, R.0 AND DAUGHTER **WILL BE RE-EVALUATED AND RE-ASSIGNED** TO LA-MIN02-V.001 **because it was included on the LANL list of 291 nitrate salt containers.**	92241	10/24/2012

27	**S845338**	S845338	55-GAL	LA-MHD01.001	INCLUDED in NCR-LANL-0509-09, R.0 AND **WILL BE RE-EVALUATED AND RE-ASSIGNED** TO LA-MIN02-V.001 **because it was included on the LANL list of 291 nitrate salt containers.**	N/A	N/A
28	**S846037**	S846037	85-GAL	LA-MHD01.001	INCLUDED in NCR-LANL-0509-09, R.0 AND **WILL BE RE-EVALUATED AND RE-ASSIGNED** TO LA-MIN02-V.001 **because it was included on the LANL list of 291 nitrate salt containers.**	N/A	N/A
29	**S846055**	S846055	55-GAL	LA-CIN01.001-Cans	INCLUDED in NCR-LANL-0509-09, R.0 AND **WILL BE RE-EVALUATED AND RE-ASSIGNED** TO LA-MIN02-V.001 **because it was included on the LANL list of 291 nitrate salt containers.**	N/A	N/A
30	**S846088**	S846088	85-GAL	LA-MHD01.001	INCLUDED in NCR-LANL-0509-09, R.0 AND **WILL BE RE-EVALUATED AND RE-ASSIGNED** TO LA-MIN02-V.001 **because it was included on the LANL list of 291 nitrate salt containers.**	N/A	N/A
31	**S846096**	S846096	85-GAL	LA-MHD01.001	INCLUDED in NCR-LANL-0509-09, R.0 AND **WILL BE RE-EVALUATED AND RE-ASSIGNED** TO LA-MIN02-V.001 **because it was included on the LANL list of 291 nitrate salt containers.**	N/A	N/A
32	**S846107**	S846107	85-GAL	LA-MHD01.001	INCLUDED in NCR-LANL-0509-09, R.0 AND **WILL BE RE-EVALUATED AND RE-ASSIGNED** TO LA-MIN02-V.001 **because it was included on the LANL list of 291 nitrate salt containers.**	N/A	N/A
33	**S846132**	S846132	85-GAL	LA-MHD01.001	INCLUDED in NCR-LANL-0509-09, R.0 AND **WILL BE RE-EVALUATED AND RE-ASSIGNED** TO LA-MIN02-V.001 **because it was included on the LANL list of 291 nitrate salt containers.**	N/A	N/A
34	**S846168**	S846168	55-GAL	LA-MHD01.001	INCLUDED in NCR-LANL-0509-09, R.0 AND **WILL BE RE-EVALUATED AND RE-ASSIGNED** TO LA-MIN02-V.001 **because it was included on the LANL list of 291 nitrate salt containers.**	N/A	N/A
35	**S846172**	S846172	85-GAL	LA-MHD01.001	INCLUDED in NCR-LANL-0509-09, R.0 AND **WILL BE RE-EVALUATED AND RE-ASSIGNED** TO LA-MIN02-V.001 **because it was included on the LANL list of 291 nitrate salt containers.**	N/A	N/A

36	**S846195**	S846195	85-GAL	LA-MHD01.001	INCLUDED in NCR-LANL-0509-09, R.0 AND **WILL BE RE-EVALUATED AND RE-ASSIGNED** TO LA-MIN02-V.001 **because it was included on the LANL list of 291 nitrate salt containers.**	N/A	N/A
37	**S846660**	S846660	55-GAL	LA-MHD01.001	INCLUDED in NCR-LANL-0509-09, R.0 AND **WILL BE RE-EVALUATED AND RE-ASSIGNED** TO LA-MIN02-V.001 **because it was included on the LANL list of 291 nitrate salt containers.**	N/A	N/A
38	**S851415**	S851415	85-GAL	LA-CIN01.001-Cans	INCLUDED in NCR-LANL-0509-09, R.0 AND **WILL BE RE-EVALUATED AND RE-ASSIGNED** TO LA-MIN02-V.001 **because it was included on the LANL list of 291 nitrate salt containers.**	N/A	N/A
39	**S851418**	S851418	85-GAL	LA-CIN01.001-Cans	INCLUDED in NCR-LANL-0509-09, R.0 AND **WILL BE RE-EVALUATED AND RE-ASSIGNED** TO LA-MIN02-V.001 **because it was included on the LANL list of 291 nitrate salt containers.**	N/A	N/A
40	**S851436**	S851436	85-GAL	LA-MHD01.001	INCLUDED in NCR-LANL-0509-09, R.0 AND **WILL BE RE-EVALUATED AND RE-ASSIGNED** TO LA-MIN02-V.001 **because it was included on the LANL list of 291 nitrate salt containers.**	N/A	N/A
41	S841295	S841295	55-GAL	LA-MIN02-V.001	**INCLUDED** in NCR-LANL-0509-09, R.0, but REMOVED FROM SUSPECT NITRATE SALTS LIST because it was NOT included in LANL List of 291 Nitrate Salt Containers; and **remained in existing waste stream**.	N/A	N/A
42	S844608	S844608	85-GAL	LA-CIN01.001	**INCLUDED** in NCR-LANL-0509-09, R.0, but REMOVED FROM SUSPECT NITRATE SALTS LIST because it was NOT included in LANL List of 291 Nitrate Salt Containers; and **remained in existing waste stream**.	N/A	N/A
43	S845135	S845135	85-GAL	LA-CIN01.001	**INCLUDED** in NCR-LANL-0509-09, R.0, but REMOVED FROM SUSPECT NITRATE SALTS LIST because it was NOT included in LANL List of 291 Nitrate Salt Containers; and **remained in existing waste stream**.	N/A	N/A
44	S845194	S845194	55-GAL	LA-MHD01.001	**INCLUDED** in NCR-LANL-0509-09, R.0, but REMOVED FROM SUSPECT NITRATE SALTS LIST because it was NOT included in LANL List of 291 Nitrate Salt Containers; and **remained in existing waste stream**.	N/A	N/A

45	S851430	S851430	85-GAL	LA-MHD01.001	**INCLUDED** in NCR-LANL-0509-09, R.0, but REMOVED FROM SUSPECT NITRATE SALTS LIST because it was NOT included in LANL List of 291 Nitrate Salt Containers; and **remained in existing waste stream**.	N/A	N/A
46	S851525	S851525	85-GAL	LA-CIN01.001	**INCLUDED** in NCR-LANL-0509-09, R.0, but REMOVED FROM SUSPECT NITRATE SALTS LIST because it was NOT included in LANL List of 291 Nitrate Salt Containers; and **remained in existing waste stream**.	N/A	N/A
47	S852596	S852596	85-GAL	LA-CIN01.001	**INCLUDED** in NCR-LANL-0509-09, R.0, but REMOVED FROM SUSPECT NITRATE SALTS LIST because it was NOT included in LANL List of 291 Nitrate Salt Containers; and **remained in existing waste stream**.	N/A	N/A
48	S852971	S852971	85-GAL	LA-CIN01.001	**INCLUDED** in NCR-LANL-0509-09, R.0, but REMOVED FROM SUSPECT NITRATE SALTS LIST because it was NOT included in LANL List of 291 Nitrate Salt Containers; and **remained in existing waste stream**.	N/A	N/A
49	88957	S824181	55-GAL	LA-MHD01.001	**NOT INCLUDED** in NCR-LANL-0509-09, R.0, but **WILL BE RE-EVALUATED AND RE-ASSIGNED TO LA-MIN02-V.001** because it was included on the LANL list of 291 nitrate salt containers.	N/A	N/A
50	**90316**	S910171	POC	LA-MIN04-S.001	**NOT INCLUDED** in NCR-LANL-0509-09, R.0, but **WILL BE RE-EVALUATED AND RE-ASSIGNED TO LA-MIN02-V.001** because it was included on the LANL list of 291 nitrate salt containers.	92459	12/11/2012
51	**90317**	S910171	POC	LA-MIN04-S.001	**NOT INCLUDED** in NCR-LANL-0509-09, R.0, but **WILL BE RE-EVALUATED AND RE-ASSIGNED TO LA-MIN02-V.001** because it was included on the LANL list of 291 nitrate salt containers.	92472	12/17/2012
52	**90318**	S910171	POC	LA-MIN04-S.001	**NOT INCLUDED** in NCR-LANL-0509-09, R.0, but **WILL BE RE-EVALUATED AND RE-ASSIGNED TO LA-MIN02-V.001** because it was included on the LANL list of 291 nitrate salt containers.	92461	12/12/2012
53	**90323**	S910172	55-GAL	LA-MIN04-S.001	**NOT INCLUDED** in NCR-LANL-0509-09, R.0, but **WILL BE RE-EVALUATED AND RE-ASSIGNED TO LA-MIN02-V.001** because it was included on the LANL list of 291 nitrate salt containers.	N/A	N/A

54	**90324**	S910172	POC	LA-MIN04-S.001	**NOT INCLUDED** in NCR-LANL-0509-09, R.0, but **WILL BE RE-EVALUATED AND RE-ASSIGNED TO LA-MIN02-V.001** because it was included on the LANL list of 291 nitrate salt containers.	92466	12/17/2012
55	**90713**	S832340	POC	LA-MHD01.001	**NOT INCLUDED** in NCR-LANL-0509-09, R.0, but **WILL BE RE-EVALUATED AND RE-ASSIGNED TO LA-MIN02-V.001** because it was included on the LANL list of 291 nitrate salt containers.	92463	12/13/2012
56	**90718**	S824551	POC	LA-MHD01.001	**NOT INCLUDED** in NCR-LANL-0509-09, R.0, but **WILL BE RE-EVALUATED AND RE-ASSIGNED TO LA-MIN02-V.001** because it was included on the LANL list of 291 nitrate salt containers.	468, 92469, 924	12/17/2012
57	**90719**	S824551	POC	LA-MHD01.001	**NOT INCLUDED** in NCR-LANL-0509-09, R.0, but **WILL BE RE-EVALUATED AND RE-ASSIGNED TO LA-MIN02-V.001** because it was included on the LANL list of 291 nitrate salt containers.	92481, 92482	12/18/2012
58	**90720**	S824551	POC	LA-MHD01.001	**NOT INCLUDED** in NCR-LANL-0509-09, R.0, but **WILL BE RE-EVALUATED AND RE-ASSIGNED TO LA-MIN02-V.001** because it was included on the LANL list of 291 nitrate salt containers.	92476, 92477	12/18/2012
59	**90721**	S824551	POC	LA-MHD01.001	**NOT INCLUDED** in NCR-LANL-0509-09, R.0, but **WILL BE RE-EVALUATED AND RE-ASSIGNED TO LA-MIN02-V.001** because it was included on the LANL list of 291 nitrate salt containers.	92479	12/18/2012
60	**90722**	S824551	POC	LA-MHD01.001	**NOT INCLUDED** in NCR-LANL-0509-09, R.0, but **WILL BE RE-EVALUATED AND RE-ASSIGNED TO LA-MIN02-V.001** because it was included on the LANL list of 291 nitrate salt containers.	92484	12/18/2012
61	**90723**	S824551	POC	LA-MHD01.001	**NOT INCLUDED** in NCR-LANL-0509-09, R.0, but **WILL BE RE-EVALUATED AND RE-ASSIGNED TO LA-MIN02-V.001** because it was included on the LANL list of 291 nitrate salt containers.	92488, 92489	12/18/2012
62	**90724**	S824551	POC	LA-MHD01.001	**NOT INCLUDED** in NCR-LANL-0509-09, R.0, but **WILL BE RE-EVALUATED AND RE-ASSIGNED TO LA-MIN02-V.001** because it was included on the LANL list of 291 nitrate salt containers.	494, 92495, 924	12/19/2012

63	**90725**	S824551	POC	LA-MHD01.001	**NOT INCLUDED** in NCR-LANL-0509-09, R.0, but **WILL BE RE-EVALUATED AND RE-ASSIGNED TO LA-MIN02-V.001** because it was included on the LANL list of 291 nitrate salt containers.	92492	12/19/2012
64	**90727**	S832147	55-GAL	LA-MHD01.001	**NOT INCLUDED** in NCR-LANL-0509-09, R.0, but **WILL BE RE-EVALUATED AND RE-ASSIGNED TO LA-MIN02-V.001** because it was included on the LANL list of 291 nitrate salt containers.	92210 92211, 92212, 92213	10/17/2012
65	**90728**	S832147	POC	LA-MHD01.001	**NOT INCLUDED** in NCR-LANL-0509-09, R.0, but **WILL BE RE-EVALUATED AND RE-ASSIGNED TO LA-MIN02-V.001** because it was included on the LANL list of 291 nitrate salt containers.	92486	12/18/2012
66	**90755**	S825639	POC	LA-MHD01.001	**NOT INCLUDED** in NCR-LANL-0509-09, R.0, but **WILL BE RE-EVALUATED AND RE-ASSIGNED TO LA-MIN02-V.001** because it was included on the LANL list of 291 nitrate salt containers.	92158	10/3/2012
67	**90756**	S825639	POC	LA-MHD01.001	**NOT INCLUDED** in NCR-LANL-0509-09, R.0, but **WILL BE RE-EVALUATED AND RE-ASSIGNED TO LA-MIN02-V.001** because it was included on the LANL list of 291 nitrate salt containers.	92136	10/2/2012
68	**90757**	S825639	POC	LA-MHD01.001	**NOT INCLUDED** in NCR-LANL-0509-09, R.0, but **WILL BE RE-EVALUATED AND RE-ASSIGNED TO LA-MIN02-V.001** because it was included on the LANL list of 291 nitrate salt containers.	N/A	N/A
69	**90758**	S825639	POC	LA-MHD01.001	**NOT INCLUDED** in NCR-LANL-0509-09, R.0, but **WILL BE RE-EVALUATED AND RE-ASSIGNED TO LA-MIN02-V.001** because it was included on the LANL list of 291 nitrate salt containers.	N/A	N/A
70	**90759**	S825639	POC	LA-MHD01.001	**NOT INCLUDED** in NCR-LANL-0509-09, R.0, but **WILL BE RE-EVALUATED AND RE-ASSIGNED TO LA-MIN02-V.001** because it was included on the LANL list of 291 nitrate salt containers.	92162	10/4/2012
71	**90760**	S825639	POC	LA-MHD01.001	**NOT INCLUDED** in NCR-LANL-0509-09, R.0, but **WILL BE RE-EVALUATED AND RE-ASSIGNED TO LA-MIN02-V.001** because it was included on the LANL list of 291 nitrate salt containers.	92154	10/3/2012

72	**90802**	S822838	POC	LA-MHD01.001	**NOT INCLUDED** in NCR-LANL-0509-09, R.0, but **WILL BE RE-EVALUATED AND RE-ASSIGNED TO LA-MIN02-V.001** because it was included on the LANL list of 291 nitrate salt containers.	92126, 92127	10/1/2012
73	**90803**	S822838	POC	LA-MHD01.001	**NOT INCLUDED** in NCR-LANL-0509-09, R.0, but **WILL BE RE-EVALUATED AND RE-ASSIGNED TO LA-MIN02-V.001** because it was included on the LANL list of 291 nitrate salt containers.	92121, 92122	10/1/2012
74	**90804**	S822838	POC	LA-MHD01.001	**NOT INCLUDED** in NCR-LANL-0509-09, R.0, but **WILL BE RE-EVALUATED AND RE-ASSIGNED TO LA-MIN02-V.001** because it was included on the LANL list of 291 nitrate salt containers.	92124	10/1/2012
75	**90805**	S822838	POC	LA-MHD01.001	**NOT INCLUDED** in NCR-LANL-0509-09, R.0, but **WILL BE RE-EVALUATED AND RE-ASSIGNED TO LA-MIN02-V.001** because it was included on the LANL list of 291 nitrate salt containers.	N/A	N/A
76	**90806**	S822838	POC	LA-MHD01.001	**NOT INCLUDED** in NCR-LANL-0509-09, R.0, but **WILL BE RE-EVALUATED AND RE-ASSIGNED TO LA-MIN02-V.001** because it was included on the LANL list of 291 nitrate salt containers.	92160	10/3/2012
77	**90807**	S822838	POC	LA-MHD01.001	**NOT INCLUDED** in NCR-LANL-0509-09, R.0, but **WILL BE RE-EVALUATED AND RE-ASSIGNED TO LA-MIN02-V.001** because it was included on the LANL list of 291 nitrate salt containers.	92173	10/4/2012
78	**90808**	S822838	POC	LA-MHD01.001	**NOT INCLUDED** in NCR-LANL-0509-09, R.0, but **WILL BE RE-EVALUATED AND RE-ASSIGNED TO LA-MIN02-V.001** because it was included on the LANL list of 291 nitrate salt containers.	92169	10/4/2012
79	**90809**	S822838	POC	LA-MHD01.001	**NOT INCLUDED** in NCR-LANL-0509-09, R.0, but **WILL BE RE-EVALUATED AND RE-ASSIGNED TO LA-MIN02-V.001** because it was included on the LANL list of 291 nitrate salt containers.	N/A	N/A
80	**90810**	S822838	POC	LA-MHD01.001	**NOT INCLUDED** in NCR-LANL-0509-09, R.0, but **WILL BE RE-EVALUATED AND RE-ASSIGNED TO LA-MIN02-V.001** because it was included on the LANL list of 291 nitrate salt containers.	92144, 92145	10/2/2012

81	**90811**	S822838	POC	LA-MHD01.001	**NOT INCLUDED** in NCR-LANL-0509-09, R.0, but **WILL BE RE-EVALUATED AND RE-ASSIGNED TO LA-MIN02-V.001** because it was included on the LANL list of 291 nitrate salt containers.	92131	10/2/2012
82	**90812**	S822838	POC	LA-MHD01.001	**NOT INCLUDED** in NCR-LANL-0509-09, R.0, but **WILL BE RE-EVALUATED AND RE-ASSIGNED TO LA-MIN02-V.001** because it was included on the LANL list of 291 nitrate salt containers.	N/A	N/A
83	**90817**	S832448	POC	LA-MHD01.001	**NOT INCLUDED** in NCR-LANL-0509-09, R.0, but **WILL BE RE-EVALUATED AND RE-ASSIGNED TO LA-MIN02-V.001** because it was included on the LANL list of 291 nitrate salt containers.	N/A	N/A
84	**90818**	S832448	POC	LA-MHD01.001	**NOT INCLUDED** in NCR-LANL-0509-09, R.0, but **WILL BE RE-EVALUATED AND RE-ASSIGNED TO LA-MIN02-V.001** because it was included on the LANL list of 291 nitrate salt containers.	92171	10/4/2012
85	**90819**	S832448	POC	LA-MHD01.001	**NOT INCLUDED** in NCR-LANL-0509-09, R.0, but **WILL BE RE-EVALUATED AND RE-ASSIGNED TO LA-MIN02-V.001** because it was included on the LANL list of 291 nitrate salt containers.	N/A	N/A
86	**90820**	S832448	POC	LA-MHD01.001	**NOT INCLUDED** in NCR-LANL-0509-09, R.0, but **WILL BE RE-EVALUATED AND RE-ASSIGNED TO LA-MIN02-V.001** because it was included on the LANL list of 291 nitrate salt containers.	92150	10/3/2012
87	**90821**	S832448	POC	LA-MHD01.001	**NOT INCLUDED** in NCR-LANL-0509-09, R.0, but **WILL BE RE-EVALUATED AND RE-ASSIGNED TO LA-MIN02-V.001** because it was included on the LANL list of 291 nitrate salt containers.	92164	10/4/2012
88	**90822**	S832448	POC	LA-MHD01.001	**NOT INCLUDED** in NCR-LANL-0509-09, R.0, but **WILL BE RE-EVALUATED AND RE-ASSIGNED TO LA-MIN02-V.001** because it was included on the LANL list of 291 nitrate salt containers.	92156	10/3/2012
89	**90823**	S832448	POC	LA-MHD01.001	**NOT INCLUDED** in NCR-LANL-0509-09, R.0, but **WILL BE RE-EVALUATED AND RE-ASSIGNED TO LA-MIN02-V.001** because it was included on the LANL list of 291 nitrate salt containers.	N/A	N/A

90	**90836**	S832156	POC	LA-MHD01.001	**NOT INCLUDED** in NCR-LANL-0509-09, R.0, but **WILL BE RE-EVALUATED AND RE-ASSIGNED TO LA-MIN02-V.001** because it was included on the LANL list of 291 nitrate salt containers.	N/A	N/A
91	**90837**	S832156	POC	LA-MHD01.001	**NOT INCLUDED** in NCR-LANL-0509-09, R.0, but **WILL BE RE-EVALUATED AND RE-ASSIGNED TO LA-MIN02-V.001** because it was included on the LANL list of 291 nitrate salt containers.	N/A	N/A
92	**90838**	S832156	POC	LA-MHD01.001	**NOT INCLUDED** in NCR-LANL-0509-09, R.0, but **WILL BE RE-EVALUATED AND RE-ASSIGNED TO LA-MIN02-V.001** because it was included on the LANL list of 291 nitrate salt containers.	92347	11/8/2012
93	**90841**	S832040	POC	LA-MHD01.001	**NOT INCLUDED** in NCR-LANL-0509-09, R.0, but **WILL BE RE-EVALUATED AND RE-ASSIGNED TO LA-MIN02-V.001** because it was included on the LANL list of 291 nitrate salt containers.	92190	10/9/2012
94	**90842**	S832040	POC	LA-MHD01.001	**NOT INCLUDED** in NCR-LANL-0509-09, R.0, but **WILL BE RE-EVALUATED AND RE-ASSIGNED TO LA-MIN02-V.001** because it was included on the LANL list of 291 nitrate salt containers.	92186	10/9/2012
95	**90843**	S832040	POC	LA-MHD01.001	**NOT INCLUDED** in NCR-LANL-0509-09, R.0, but **WILL BE RE-EVALUATED AND RE-ASSIGNED TO LA-MIN02-V.001** because it was included on the LANL list of 291 nitrate salt containers.	92139, 92140	10/2/2012
96	**90848**	S832149	POC	LA-MHD01.001	**NOT INCLUDED** in NCR-LANL-0509-09, R.0, but **WILL BE RE-EVALUATED AND RE-ASSIGNED TO LA-MIN02-V.001** because it was included on the LANL list of 291 nitrate salt containers.	92181	10/9/2012
97	**90849**	S832149	POC	LA-MHD01.001	**NOT INCLUDED** in NCR-LANL-0509-09, R.0, but **WILL BE RE-EVALUATED AND RE-ASSIGNED TO LA-MIN02-V.001** because it was included on the LANL list of 291 nitrate salt containers.	N/A	N/A
98	**90850**	S832149	POC	LA-MHD01.001	**NOT INCLUDED** in NCR-LANL-0509-09, R.0, but **WILL BE RE-EVALUATED AND RE-ASSIGNED TO LA-MIN02-V.001** because it was included on the LANL list of 291 nitrate salt containers.	92290	11/2/2012

99	**90851**	S832149	POC	LA-MHD01.001	**NOT INCLUDED** in NCR-LANL-0509-09, R.0, but **WILL BE RE-EVALUATED AND RE-ASSIGNED TO LA-MIN02-V.001** because it was included on the LANL list of 291 nitrate salt containers.	N/A	N/A
100	**90852**	S832149	POC	LA-MHD01.001	**NOT INCLUDED** in NCR-LANL-0509-09, R.0, but **WILL BE RE-EVALUATED AND RE-ASSIGNED TO LA-MIN02-V.001** because it was included on the LANL list of 291 nitrate salt containers.	N/A	N/A
101	**90853**	S832149	POC	LA-MHD01.001	**NOT INCLUDED** in NCR-LANL-0509-09, R.0, but **WILL BE RE-EVALUATED AND RE-ASSIGNED TO LA-MIN02-V.001** because it was included on the LANL list of 291 nitrate salt containers.	92294	11/10/2012
102	**90855**	S834539	55-GAL	LA-MHD01.001	**NOT INCLUDED** in NCR-LANL-0509-09, R.0, but **WILL BE RE-EVALUATED AND RE-ASSIGNED TO LA-MIN02-V.001** because it was included on the LANL list of 291 nitrate salt containers.	N/A	N/A
103	**90858**	S834539	POC	LA-MHD01.001	**NOT INCLUDED** in NCR-LANL-0509-09, R.0, but **WILL BE RE-EVALUATED AND RE-ASSIGNED TO LA-MIN02-V.001** because it was included on the LANL list of 291 nitrate salt containers.	92292	11/1/2012
104	**90859**	S834539	POC	LA-MHD01.001	**NOT INCLUDED** in NCR-LANL-0509-09, R.0, but **WILL BE RE-EVALUATED AND RE-ASSIGNED TO LA-MIN02-V.001** because it was included on the LANL list of 291 nitrate salt containers.	92133, 92134	10/2/2012
105	**90860**	S834539	POC	LA-MHD01.001	**NOT INCLUDED** in NCR-LANL-0509-09, R.0, but **WILL BE RE-EVALUATED AND RE-ASSIGNED TO LA-MIN02-V.001** because it was included on the LANL list of 291 nitrate salt containers.	92183, 92184	10/9/2012
106	**90861**	S834539	POC	LA-MHD01.001	**NOT INCLUDED** in NCR-LANL-0509-09, R.0, but **WILL BE RE-EVALUATED AND RE-ASSIGNED TO LA-MIN02-V.001** because it was included on the LANL list of 291 nitrate salt containers.	92188	10/9/2012
107	**90862**	S834539	POC	LA-MHD01.001	**NOT INCLUDED** in NCR-LANL-0509-09, R.0, but **WILL BE RE-EVALUATED AND RE-ASSIGNED TO LA-MIN02-V.001** because it was included on the LANL list of 291 nitrate salt containers.	92195	10/11/2012

108	**90863**	S834539	POC	LA-MHD01.001	**NOT INCLUDED** in NCR-LANL-0509-09, R.0, but **WILL BE RE-EVALUATED AND RE-ASSIGNED TO LA-MIN02-V.001** because it was included on the LANL list of 291 nitrate salt containers.	92197	10/11/2012
109	**90865**	S832464	55-GAL	LA-MHD01.001	**NOT INCLUDED** in NCR-LANL-0509-09, R.0, but **WILL BE RE-EVALUATED AND RE-ASSIGNED TO LA-MIN02-V.001** because it was included on the LANL list of 291 nitrate salt containers.	215, 92216, 922	10/18/2012
110	**90866**	S832464	POC	LA-MHD01.001	**NOT INCLUDED** in NCR-LANL-0509-09, R.0, but **WILL BE RE-EVALUATED AND RE-ASSIGNED TO LA-MIN02-V.001** because it was included on the LANL list of 291 nitrate salt containers.	92296	11/1/2012
111	**90867**	S832464	POC	LA-MHD01.001	**NOT INCLUDED** in NCR-LANL-0509-09, R.0, but **WILL BE RE-EVALUATED AND RE-ASSIGNED TO LA-MIN02-V.001** because it was included on the LANL list of 291 nitrate salt containers.	92341	11/8/2012
112	**90868**	S832464	POC	LA-MHD01.001	**NOT INCLUDED** in NCR-LANL-0509-09, R.0, but **WILL BE RE-EVALUATED AND RE-ASSIGNED TO LA-MIN02-V.001** because it was included on the LANL list of 291 nitrate salt containers.	92345	11/8/2012
113	**90869**	S832464	POC	LA-MHD01.001	**NOT INCLUDED** in NCR-LANL-0509-09, R.0, but **WILL BE RE-EVALUATED AND RE-ASSIGNED TO LA-MIN02-V.001** because it was included on the LANL list of 291 nitrate salt containers.	92339	11/8/2012
114	**90870**	S832464	POC	LA-MHD01.001	**NOT INCLUDED** in NCR-LANL-0509-09, R.0, but **WILL BE RE-EVALUATED AND RE-ASSIGNED TO LA-MIN02-V.001** because it was included on the LANL list of 291 nitrate salt containers.	92142	10/2/2012
115	**90876**	S844213	POC	LA-MHD01.001	**NOT INCLUDED** in NCR-LANL-0509-09, R.0, but **WILL BE RE-EVALUATED AND RE-ASSIGNED TO LA-MIN02-V.001** because it was included on the LANL list of 291 nitrate salt containers.	92343	11/8/2012
116	**90877**	S844213	POC	LA-MHD01.001	**NOT INCLUDED** in NCR-LANL-0509-09, R.0, but **WILL BE RE-EVALUATED AND RE-ASSIGNED TO LA-MIN02-V.001** because it was included on the LANL list of 291 nitrate salt containers.	92202	10/15/2012

117	**90878**	S844213	POC	LA-MHD01.001	**NOT INCLUDED** in NCR-LANL-0509-09, R.0, but **WILL BE RE-EVALUATED AND RE-ASSIGNED TO LA-MIN02-V.001** because it was included on the LANL list of 291 nitrate salt containers.	92349	11/8/2012
118	**90880**	S843962	55-GAL	LA-MHD01.001	**NOT INCLUDED** in NCR-LANL-0509-09, R.0, but **WILL BE RE-EVALUATED AND RE-ASSIGNED TO LA-MIN02-V.001** because it was included on the LANL list of 291 nitrate salt containers.	219, 92220, 922	10/18/2012
119	**90881**	S843962	POC	LA-MHD01.001	**NOT INCLUDED** in NCR-LANL-0509-09, R.0, but **WILL BE RE-EVALUATED AND RE-ASSIGNED TO LA-MIN02-V.001** because it was included on the LANL list of 291 nitrate salt containers.	N/A	N/A
120	**90884**	S833261	POC	LA-MHD01.001	**NOT INCLUDED** in NCR-LANL-0509-09, R.0, but **WILL BE RE-EVALUATED AND RE-ASSIGNED TO LA-MIN02-V.001** because it was included on the LANL list of 291 nitrate salt containers.	92355	11/13/2012
121	**90885**	S833261	POC	LA-MHD01.001	**NOT INCLUDED** in NCR-LANL-0509-09, R.0, but **WILL BE RE-EVALUATED AND RE-ASSIGNED TO LA-MIN02-V.001** because it was included on the LANL list of 291 nitrate salt containers.	N/A	N/A
122	**90886**	S833261	POC	LA-MHD01.001	**NOT INCLUDED** in NCR-LANL-0509-09, R.0, but **WILL BE RE-EVALUATED AND RE-ASSIGNED TO LA-MIN02-V.001** because it was included on the LANL list of 291 nitrate salt containers.	N/A	N/A
123	**90888**	S823194	55-GAL	LA-MHD01.001	**NOT INCLUDED** in NCR-LANL-0509-09, R.0, but **WILL BE RE-EVALUATED AND RE-ASSIGNED TO LA-MIN02-V.001** because it was included on the LANL list of 291 nitrate salt containers.	92229	10/23/2012
124	**90890**	S823194	POC	LA-MHD01.001	**NOT INCLUDED** in NCR-LANL-0509-09, R.0, but **WILL BE RE-EVALUATED AND RE-ASSIGNED TO LA-MIN02-V.001** because it was included on the LANL list of 291 nitrate salt containers.	92360	11/13/2012
125	**90893**	S845201	POC	LA-MHD01.001	**NOT INCLUDED** in NCR-LANL-0509-09, R.0, but **WILL BE RE-EVALUATED AND RE-ASSIGNED TO LA-MIN02-V.001** because it was included on the LANL list of 291 nitrate salt containers.	N/A	N/A

126	**90895**	S832155	55-GAL	LA-MHD01.001	**NOT INCLUDED** in NCR-LANL-0509-09, R.0, but **WILL BE RE-EVALUATED AND RE-ASSIGNED TO LA-MIN02-V.001** because it was included on the LANL list of 291 nitrate salt containers.	92237	10/23/2012
127	**90896**	S832155	POC	LA-MHD01.001	**NOT INCLUDED** in NCR-LANL-0509-09, R.0, but **WILL BE RE-EVALUATED AND RE-ASSIGNED TO LA-MIN02-V.001** because it was included on the LANL list of 291 nitrate salt containers.	N/A	N/A
128	**90897**	S832155	POC	LA-MHD01.001	**NOT INCLUDED** in NCR-LANL-0509-09, R.0, but **WILL BE RE-EVALUATED AND RE-ASSIGNED TO LA-MIN02-V.001** because it was included on the LANL list of 291 nitrate salt containers.	92362	11/13/2012
129	**90899**	S823187	55-GAL	LA-MHD01.001	**NOT INCLUDED** in NCR-LANL-0509-09, R.0, but **WILL BE RE-EVALUATED AND RE-ASSIGNED TO LA-MIN02-V.001** because it was included on the LANL list of 291 nitrate salt containers.	92245, 92246	10/25/2012
130	**90900**	S823187	POC	LA-MHD01.001	**NOT INCLUDED** in NCR-LANL-0509-09, R.0, but **WILL BE RE-EVALUATED AND RE-ASSIGNED TO LA-MIN02-V.001** because it was included on the LANL list of 291 nitrate salt containers.	N/A	N/A
131	**90925**	S862411	55-GAL	LA-MHD01.001	**NOT INCLUDED** in NCR-LANL-0509-09, R.0, but **WILL BE RE-EVALUATED AND RE-ASSIGNED TO LA-MIN02-V.001** because it was included on the LANL list of 291 nitrate salt containers.	92239	10/24/2012
132	**90929**	S860096	POC	LA-MHD01.001	**NOT INCLUDED** in NCR-LANL-0509-09, R.0, but **WILL BE RE-EVALUATED AND RE-ASSIGNED TO LA-MIN02-V.001** because it was included on the LANL list of 291 nitrate salt containers.	N/A	N/A
133	**90932**	S863696	POC	LA-MHD01.001	**NOT INCLUDED** in NCR-LANL-0509-09, R.0, but **WILL BE RE-EVALUATED AND RE-ASSIGNED TO LA-MIN02-V.001** because it was included on the LANL list of 291 nitrate salt containers.	N/A	N/A
134	**90933**	S863696	POC	LA-MHD01.001	**NOT INCLUDED** in NCR-LANL-0509-09, R.0, but **WILL BE RE-EVALUATED AND RE-ASSIGNED TO LA-MIN02-V.001** because it was included on the LANL list of 291 nitrate salt containers.	92374	11/14/2012

135	**90934**	S863696	POC	LA-MHD01.001	**NOT INCLUDED** in NCR-LANL-0509-09, R.0, but **WILL BE RE-EVALUATED AND RE-ASSIGNED TO LA-MIN02-V.001** because it was included on the LANL list of 291 nitrate salt containers.	N/A	N/A
136	**90936**	S871844	55-GAL	LA-MHD01.001	**NOT INCLUDED** in NCR-LANL-0509-09, R.0, but **WILL BE RE-EVALUATED AND RE-ASSIGNED TO LA-MIN02-V.001** because it was included on the LANL list of 291 nitrate salt containers.	92251, 92252	10/25/2012
137	**90937**	S871844	POC	LA-MHD01.001	**NOT INCLUDED** in NCR-LANL-0509-09, R.0, but **WILL BE RE-EVALUATED AND RE-ASSIGNED TO LA-MIN02-V.001** because it was included on the LANL list of 291 nitrate salt containers.	92351	11/8/2012
138	**90939**	S863788	55-GAL	LA-MHD01.001	**NOT INCLUDED** in NCR-LANL-0509-09, R.0, but **WILL BE RE-EVALUATED AND RE-ASSIGNED TO LA-MIN02-V.001** because it was included on the LANL list of 291 nitrate salt containers.	92233	10/23/2012
139	**90941**	S863788	POC	LA-MHD01.001	**NOT INCLUDED** in NCR-LANL-0509-09, R.0, but **WILL BE RE-EVALUATED AND RE-ASSIGNED TO LA-MIN02-V.001** because it was included on the LANL list of 291 nitrate salt containers.	92357	11/13/2012
140	**90942**	S863788	POC	LA-MHD01.001	**NOT INCLUDED** in NCR-LANL-0509-09, R.0, but **WILL BE RE-EVALUATED AND RE-ASSIGNED TO LA-MIN02-V.001** because it was included on the LANL list of 291 nitrate salt containers.	N/A	N/A
141	**90953**	S863787	55-GAL	LA-MHD01.001	**NOT INCLUDED** in NCR-LANL-0509-09, R.0, but **WILL BE RE-EVALUATED AND RE-ASSIGNED TO LA-MIN02-V.001** because it was included on the LANL list of 291 nitrate salt containers.	92227	10/22/2012
142	**90955**	S863787	POC	LA-MHD01.001	**NOT INCLUDED** in NCR-LANL-0509-09, R.0, but **WILL BE RE-EVALUATED AND RE-ASSIGNED TO LA-MIN02-V.001** because it was included on the LANL list of 291 nitrate salt containers.	92129	10/2/2012
143	**90956**	S863787	POC	LA-MHD01.001	**NOT INCLUDED** in NCR-LANL-0509-09, R.0, but **WILL BE RE-EVALUATED AND RE-ASSIGNED TO LA-MIN02-V.001** because it was included on the LANL list of 291 nitrate salt containers.	92192	10/9/2012

144	**90957**	S863787	POC	LA-MHD01.001	**NOT INCLUDED** in NCR-LANL-0509-09, R.0, but **WILL BE RE-EVALUATED AND RE-ASSIGNED TO LA-MIN02-V.001** because it was included on the LANL list of 291 nitrate salt containers.	N/A	N/A
145	**90965**	S883130	55-GAL	LA-MHD01.001	**NOT INCLUDED** in NCR-LANL-0509-09, R.0, but **WILL BE RE-EVALUATED AND RE-ASSIGNED TO LA-MIN02-V.001** because it was included on the LANL list of 291 nitrate salt containers.	92235	10/23/2012
146	**90966**	S883130	POC	LA-MHD01.001	**NOT INCLUDED** in NCR-LANL-0509-09, R.0, but **WILL BE RE-EVALUATED AND RE-ASSIGNED TO LA-MIN02-V.001** because it was included on the LANL list of 291 nitrate salt containers.	92152	10/3/2012
147	**90968**	S883130	POC	LA-MHD01.001	**NOT INCLUDED** in NCR-LANL-0509-09, R.0, but **WILL BE RE-EVALUATED AND RE-ASSIGNED TO LA-MIN02-V.001** because it was included on the LANL list of 291 nitrate salt containers.	92204	10/15/2012
148	**90969**	S883130	POC	LA-MHD01.001	**NOT INCLUDED** in NCR-LANL-0509-09, R.0, but **WILL BE RE-EVALUATED AND RE-ASSIGNED TO LA-MIN02-V.001** because it was included on the LANL list of 291 nitrate salt containers.	N/A	N/A
149	**90972**	S881608	POC	LA-MHD01.001	**NOT INCLUDED** in NCR-LANL-0509-09, R.0, but **WILL BE RE-EVALUATED AND RE-ASSIGNED TO LA-MIN02-V.001** because it was included on the LANL list of 291 nitrate salt containers.	92364	11/13/2012
150	**90973**	S881608	POC	LA-MHD01.001	**NOT INCLUDED** in NCR-LANL-0509-09, R.0, but **WILL BE RE-EVALUATED AND RE-ASSIGNED TO LA-MIN02-V.001** because it was included on the LANL list of 291 nitrate salt containers.	N/A	N/A
151	**90974**	S881608	POC	LA-MHD01.001	**NOT INCLUDED** in NCR-LANL-0509-09, R.0, but **WILL BE RE-EVALUATED AND RE-ASSIGNED TO LA-MIN02-V.001** because it was included on the LANL list of 291 nitrate salt containers.	92366	11/13/2012
152	**90986**	S881569	55-GAL	LA-MHD01.001	**NOT INCLUDED** in NCR-LANL-0509-09, R.0, but **WILL BE RE-EVALUATED AND RE-ASSIGNED TO LA-MIN02-V.001** because it was included on the LANL list of 291 nitrate salt containers.	N/A	N/A

153	**90987**	S881569	POC	LA-MHD01.001	**NOT INCLUDED** in NCR-LANL-0509-09, R.0, but **WILL BE RE-EVALUATED AND RE-ASSIGNED TO LA-MIN02-V.001** because it was included on the LANL list of 291 nitrate salt containers.	N/A	N/A
154	**90988**	S881569	POC	LA-MHD01.001	**NOT INCLUDED** in NCR-LANL-0509-09, R.0, but **WILL BE RE-EVALUATED AND RE-ASSIGNED TO LA-MIN02-V.001** because it was included on the LANL list of 291 nitrate salt containers.	N/A	N/A
155	**90989**	S881569	POC	LA-MHD01.001	**NOT INCLUDED** in NCR-LANL-0509-09, R.0, but **WILL BE RE-EVALUATED AND RE-ASSIGNED TO LA-MIN02-V.001** because it was included on the LANL list of 291 nitrate salt containers.	N/A	N/A
156	**90990**	S881569	POC	LA-MHD01.001	**NOT INCLUDED** in NCR-LANL-0509-09, R.0, but **WILL BE RE-EVALUATED AND RE-ASSIGNED TO LA-MIN02-V.001** because it was included on the LANL list of 291 nitrate salt containers.	N/A	N/A
157	**90991**	S881569	POC	LA-MHD01.001	**NOT INCLUDED** in NCR-LANL-0509-09, R.0, but **WILL BE RE-EVALUATED AND RE-ASSIGNED TO LA-MIN02-V.001** because it was included on the LANL list of 291 nitrate salt containers.	N/A	N/A
158	**90993**	S851432	55-GAL	LA-MHD01.001	**NOT INCLUDED** in NCR-LANL-0509-09, R.0, but **WILL BE RE-EVALUATED AND RE-ASSIGNED TO LA-MIN02-V.001** because it was included on the LANL list of 291 nitrate salt containers.	92231	10/23/2012
159	**90995**	S851432	POC	LA-MHD01.001	**NOT INCLUDED** in NCR-LANL-0509-09, R.0, but **WILL BE RE-EVALUATED AND RE-ASSIGNED TO LA-MIN02-V.001** because it was included on the LANL list of 291 nitrate salt containers.	N/A	N/A
160	**90996**	S851432	POC	LA-MHD01.001	**NOT INCLUDED** in NCR-LANL-0509-09, R.0, but **WILL BE RE-EVALUATED AND RE-ASSIGNED TO LA-MIN02-V.001** because it was included on the LANL list of 291 nitrate salt containers.	N/A	N/A
161	**90997**	S851432	POC	LA-MHD01.001	**NOT INCLUDED** in NCR-LANL-0509-09, R.0, but **WILL BE RE-EVALUATED AND RE-ASSIGNED TO LA-MIN02-V.001** because it was included on the LANL list of 291 nitrate salt containers.	N/A	N/A

162	**91000**	S881562	POC	LA-MHD01.001	**NOT INCLUDED** in NCR-LANL-0509-09, R.0, but **WILL BE RE-EVALUATED AND RE-ASSIGNED TO LA-MIN02-V.001** because it was included on the LANL list of 291 nitrate salt containers.	92206	10/15/2012
163	**91001**	S881562	POC	LA-MHD01.001	**NOT INCLUDED** in NCR-LANL-0509-09, R.0, but **WILL BE RE-EVALUATED AND RE-ASSIGNED TO LA-MIN02-V.001** because it was included on the LANL list of 291 nitrate salt containers.	92378	11/14/2012
164	**91002**	S881562	POC	LA-MHD01.001	**NOT INCLUDED** in NCR-LANL-0509-09, R.0, but **WILL BE RE-EVALUATED AND RE-ASSIGNED TO LA-MIN02-V.001** because it was included on the LANL list of 291 nitrate salt containers.	N/A	N/A
165	**91003**	S881562	POC	LA-MHD01.001	**NOT INCLUDED** in NCR-LANL-0509-09, R.0, but **WILL BE RE-EVALUATED AND RE-ASSIGNED TO LA-MIN02-V.001** because it was included on the LANL list of 291 nitrate salt containers.	N/A	N/A
166	**91004**	S881562	POC	LA-MHD01.001	**NOT INCLUDED** in NCR-LANL-0509-09, R.0, but **WILL BE RE-EVALUATED AND RE-ASSIGNED TO LA-MIN02-V.001** because it was included on the LANL list of 291 nitrate salt containers.	92166	10/4/2012
167	**91007**	S881563	POC	LA-MHD01.001	**NOT INCLUDED** in NCR-LANL-0509-09, R.0, but **WILL BE RE-EVALUATED AND RE-ASSIGNED TO LA-MIN02-V.001** because it was included on the LANL list of 291 nitrate salt containers.	N/A	N/A
168	**91008**	S881563	POC	LA-MHD01.001	**NOT INCLUDED** in NCR-LANL-0509-09, R.0, but **WILL BE RE-EVALUATED AND RE-ASSIGNED TO LA-MIN02-V.001** because it was included on the LANL list of 291 nitrate salt containers.	92175	10/4/2012
169	**91009**	S881563	POC	LA-MHD01.001	**NOT INCLUDED** in NCR-LANL-0509-09, R.0, but **WILL BE RE-EVALUATED AND RE-ASSIGNED TO LA-MIN02-V.001** because it was included on the LANL list of 291 nitrate salt containers.	N/A	N/A
170	**91010**	S881563	POC	LA-MHD01.001	**NOT INCLUDED** in NCR-LANL-0509-09, R.0, but **WILL BE RE-EVALUATED AND RE-ASSIGNED TO LA-MIN02-V.001** because it was included on the LANL list of 291 nitrate salt containers.	N/A	N/A

171	**91011**	S881563	POC	LA-MHD01.001	**NOT INCLUDED in NCR-LANL-0509-09, R.0, but WILL BE RE-EVALUATED AND RE-ASSIGNED TO LA-MIN02-V.001 because it was included on the LANL list of 291 nitrate salt containers.**	N/A	N/A
172	**91013**	S851506	55-GAL	LA-MHD01.001	**NOT INCLUDED** in NCR-LANL-0509-09, R.0, but **WILL BE RE-EVALUATED AND RE-ASSIGNED TO LA-MIN02-V.001** because it was included on the LANL list of 291 nitrate salt containers.	92248, 92249	10/25/2012
173	**91017**	S851506	POC	LA-MHD01.001	**NOT INCLUDED** in NCR-LANL-0509-09, R.0, but **WILL BE RE-EVALUATED AND RE-ASSIGNED TO LA-MIN02-V.001** because it was included on the LANL list of 291 nitrate salt containers.	N/A	N/A
174	**91018**	S851506	POC	LA-MHD01.001	**NOT INCLUDED** in NCR-LANL-0509-09, R.0, but **WILL BE RE-EVALUATED AND RE-ASSIGNED TO LA-MIN02-V.001** because it was included on the LANL list of 291 nitrate salt containers.	N/A	N/A
175	**91019**	S851506	POC	LA-MHD01.001	**NOT INCLUDED** in NCR-LANL-0509-09, R.0, but **WILL BE RE-EVALUATED AND RE-ASSIGNED TO LA-MIN02-V.001** because it was included on the LANL list of 291 nitrate salt containers.	N/A	N/A
176	**S793450**	S793450	85-GAL	LA-CIN01.001	**NOT INCLUDED** in NCR-LANL-0509-09, R.0, but **WILL BE RE-EVALUATED AND RE-ASSIGNED TO LA-MIN02-V.001** because it was included on the LANL list of 291 nitrate salt containers.	N/A	N/A
177	**S802701**	S802701	85-GAL	LA-CIN01.001	**NOT INCLUDED** in NCR-LANL-0509-09, R.0, but **WILL BE RE-EVALUATED AND RE-ASSIGNED TO LA-MIN02-V.001** because it was included on the LANL list of 291 nitrate salt containers.	N/A	N/A
178	**S803613**	S803613	55-GAL	LA-CIN01.001	**NOT INCLUDED** in NCR-LANL-0509-09, R.0, but **WILL BE RE-EVALUATED AND RE-ASSIGNED TO LA-MIN02-V.001** because it was included on the LANL list of 291 nitrate salt containers.	N/A	N/A
179	**S804989**	S804989	55-GAL	LA-CIN01.001	**NOT INCLUDED** in NCR-LANL-0509-09, R.0, but **WILL BE RE-EVALUATED AND RE-ASSIGNED TO LA-MIN02-V.001** because it was included on the LANL list of 291 nitrate salt containers.	N/A	N/A

180	**S811692**	S811692	55-GAL	LA-CIN01.001	**NOT INCLUDED** in NCR-LANL-0509-09, R.0, but **WILL BE RE-EVALUATED AND RE-ASSIGNED TO LA-MIN02-V.001** because it was included on the LANL list of 291 nitrate salt containers.	N/A	N/A
181	**S813471**	S813471	85-GAL	LA-CIN01.001	**NOT INCLUDED** in NCR-LANL-0509-09, R.0, but **WILL BE RE-EVALUATED AND RE-ASSIGNED TO LA-MIN02-V.001** because it was included on the LANL list of 291 nitrate salt containers.	N/A	N/A
182	**S813676**	S813676	55-GAL	LA-CIN01.001	**NOT INCLUDED** in NCR-LANL-0509-09, R.0, but **WILL BE RE-EVALUATED AND RE-ASSIGNED TO LA-MIN02-V.001** because it was included on the LANL list of 291 nitrate salt containers.	N/A	N/A
183	**S816692**	S816692	55-GAL	LA-CIN01.001	**NOT INCLUDED** in NCR-LANL-0509-09, R.0, but **WILL BE RE-EVALUATED AND RE-ASSIGNED TO LA-MIN02-V.001** because it was included on the LANL list of 291 nitrate salt containers.	N/A	N/A
184	**S816768**	S816768	55-GAL	LA-CIN01.001	**NOT INCLUDED** in NCR-LANL-0509-09, R.0, but **WILL BE RE-EVALUATED AND RE-ASSIGNED TO LA-MIN02-V.001** because it was included on the LANL list of 291 nitrate salt containers.	N/A	N/A
185	**S816837**	S816837	55-GAL	LA-CIN01.001	**NOT INCLUDED** in NCR-LANL-0509-09, R.0, but **WILL BE RE-EVALUATED AND RE-ASSIGNED TO LA-MIN02-V.001** because it was included on the LANL list of 291 nitrate salt containers.	N/A	N/A
186	**S816890**	S816890	55-GAL	LA-CIN01.001	**NOT INCLUDED** in NCR-LANL-0509-09, R.0, but **WILL BE RE-EVALUATED AND RE-ASSIGNED TO LA-MIN02-V.001** because it was included on the LANL list of 291 nitrate salt containers.	N/A	N/A
187	**S818255**	S818255	55-GAL	LA-CIN01.001	**NOT INCLUDED** in NCR-LANL-0509-09, R.0, but **WILL BE RE-EVALUATED AND RE-ASSIGNED TO LA-MIN02-V.001** because it was included on the LANL list of 291 nitrate salt containers.	N/A	N/A
188	**S818382**	S818382	55-GAL	LA-CIN01.001	**NOT INCLUDED** in NCR-LANL-0509-09, R.0, but **WILL BE RE-EVALUATED AND RE-ASSIGNED TO LA-MIN02-V.001** because it was included on the LANL list of 291 nitrate salt containers.	N/A	N/A

189	**S818412**	S818412	85-GAL	LA-CIN01.001	**NOT INCLUDED** in NCR-LANL-0509-09, R.0, but **WILL BE RE-EVALUATED AND RE-ASSIGNED TO LA-MIN02-V.001** because it was included on the LANL list of 291 nitrate salt containers.	N/A	N/A
190	**S818449**	S818449	55-GAL	LA-CIN01.001	**NOT INCLUDED** in NCR-LANL-0509-09, R.0, but **WILL BE RE-EVALUATED AND RE-ASSIGNED TO LA-MIN02-V.001** because it was included on the LANL list of 291 nitrate salt containers.	N/A	N/A
191	**S821203**	S821203	85-GAL	LA-MHD01.001	**NOT INCLUDED** in NCR-LANL-0509-09, R.0, but **WILL BE RE-EVALUATED AND RE-ASSIGNED TO LA-MIN02-V.001** because it was included on the LANL list of 291 nitrate salt containers.	N/A	N/A
192	**S822679**	S822679	85-GAL	LA-CIN01.001-Cans	**NOT INCLUDED** in NCR-LANL-0509-09, R.0, but **WILL BE RE-EVALUATED AND RE-ASSIGNED TO LA-MIN02-V.001** because it was included on the LANL list of 291 nitrate salt containers.	N/A	N/A
193	**S822876**	S822876	85-GAL	LA-MHD01.001	**NOT INCLUDED** in NCR-LANL-0509-09, R.0, but **WILL BE RE-EVALUATED AND RE-ASSIGNED TO LA-MIN02-V.001** because it was included on the LANL list of 291 nitrate salt containers.	N/A	N/A
194	**S822952**	S822952	55-GAL	LA-MHD01.001	**NOT INCLUDED** in NCR-LANL-0509-09, R.0, but **WILL BE RE-EVALUATED AND RE-ASSIGNED TO LA-MIN02-V.001** because it was included on the LANL list of 291 nitrate salt containers.	N/A	N/A
195	**S823004**	S823004	55-GAL	LA-MHD01.001	**NOT INCLUDED** in NCR-LANL-0509-09, R.0, but **WILL BE RE-EVALUATED AND RE-ASSIGNED TO LA-MIN02-V.001** because it was included on the LANL list of 291 nitrate salt containers.	N/A	N/A
196	**S823016**	S823016	55-GAL	LA-CIN01.001	**NOT INCLUDED** in NCR-LANL-0509-09, R.0, but **WILL BE RE-EVALUATED AND RE-ASSIGNED TO LA-MIN02-V.001** because it was included on the LANL list of 291 nitrate salt containers.	N/A	N/A
197	**S823127**	S823127	55-GAL	LA-CIN01.001	**NOT INCLUDED** in NCR-LANL-0509-09, R.0, but **WILL BE RE-EVALUATED AND RE-ASSIGNED TO LA-MIN02-V.001** because it was included on the LANL list of 291 nitrate salt containers.	N/A	N/A

198	**S823166**	S823166	85-GAL	LA-MHD01.001	**NOT INCLUDED** in NCR-LANL-0509-09, R.0, but **WILL BE RE-EVALUATED AND RE-ASSIGNED TO LA-MIN02-V.001** because it was included on the LANL list of 291 nitrate salt containers.	N/A	N/A
199	**S823221**	S823221	55-GAL	LA-MHD01.001	**NOT INCLUDED** in NCR-LANL-0509-09, R.0, but **WILL BE RE-EVALUATED AND RE-ASSIGNED TO LA-MIN02-V.001** because it was included on the LANL list of 291 nitrate salt containers.	N/A	N/A
200	**S823229**	S823229	85-GAL	LA-MHD01.001	**NOT INCLUDED** in NCR-LANL-0509-09, R.0, but **WILL BE RE-EVALUATED AND RE-ASSIGNED TO LA-MIN02-V.001** because it was included on the LANL list of 291 nitrate salt containers.	N/A	N/A
201	**S823276**	S823276	85-GAL	LA-MHD01.001	**NOT INCLUDED** in NCR-LANL-0509-09, R.0, but **WILL BE RE-EVALUATED AND RE-ASSIGNED TO LA-MIN02-V.001** because it was included on the LANL list of 291 nitrate salt containers.	N/A	N/A
202	**S824184**	S824184	85-GAL	LA-MHD01.001	**NOT INCLUDED** in NCR-LANL-0509-09, R.0, but **WILL BE RE-EVALUATED AND RE-ASSIGNED TO LA-MIN02-V.001** because it was included on the LANL list of 291 nitrate salt containers.	N/A	N/A
203	**S824187**	S824187	85-GAL	LA-MHD01.001	**NOT INCLUDED** in NCR-LANL-0509-09, R.0, but **WILL BE RE-EVALUATED AND RE-ASSIGNED TO LA-MIN02-V.001** because it was included on the LANL list of 291 nitrate salt containers.	N/A	N/A
204	**S824188**	S824188	55-GAL	LA-MHD01.001	**NOT INCLUDED** in NCR-LANL-0509-09, R.0, but **WILL BE RE-EVALUATED AND RE-ASSIGNED TO LA-MIN02-V.001** because it was included on the LANL list of 291 nitrate salt containers.	N/A	N/A
205	**S824208**	S824208	55-GAL	LA-MHD01.001	**NOT INCLUDED** in NCR-LANL-0509-09, R.0, but **WILL BE RE-EVALUATED AND RE-ASSIGNED TO LA-MIN02-V.001** because it was included on the LANL list of 291 nitrate salt containers.	N/A	N/A
206	**S824508**	S824508	85-GAL	LA-MHD01.001	**NOT INCLUDED** in NCR-LANL-0509-09, R.0, but **WILL BE RE-EVALUATED AND RE-ASSIGNED TO LA-MIN02-V.001** because it was included on the LANL list of 291 nitrate salt containers.	N/A	N/A

207	**S824541**	S824541	85-GAL	LA-MHD01.001	**NOT INCLUDED** in NCR-LANL-0509-09, R.0, but **WILL BE RE-EVALUATED AND RE-ASSIGNED TO LA-MIN02-V.001** because it was included on the LANL list of 291 nitrate salt containers.	N/A	N/A
208	**S824660**	S824660	55-GAL	LA-MHD01.001	**NOT INCLUDED** in NCR-LANL-0509-09, R.0, but **WILL BE RE-EVALUATED AND RE-ASSIGNED TO LA-MIN02-V.001** because it was included on the LANL list of 291 nitrate salt containers.	N/A	N/A
209	**S824967**	S824967	85-GAL	LA-MHD01.001	**NOT INCLUDED** in NCR-LANL-0509-09, R.0, but **WILL BE RE-EVALUATED AND RE-ASSIGNED TO LA-MIN02-V.001** because it was included on the LANL list of 291 nitrate salt containers.	N/A	N/A
210	**S825020**	S825020	55-GAL	LA-MHD01.001	**NOT INCLUDED** in NCR-LANL-0509-09, R.0, but **WILL BE RE-EVALUATED AND RE-ASSIGNED TO LA-MIN02-V.001** because it was included on the LANL list of 291 nitrate salt containers.	N/A	N/A
211	**S825021**	S825021	55-GAL	LA-MHD01.001	**NOT INCLUDED** in NCR-LANL-0509-09, R.0, but **WILL BE RE-EVALUATED AND RE-ASSIGNED TO LA-MIN02-V.001** because it was included on the LANL list of 291 nitrate salt containers.	N/A	N/A
212	**S825730**	S825730	55-GAL	LA-MHD01.001	**NOT INCLUDED** in NCR-LANL-0509-09, R.0, but **WILL BE RE-EVALUATED AND RE-ASSIGNED TO LA-MIN02-V.001** because it was included on the LANL list of 291 nitrate salt containers.	N/A	N/A
213	**S825810**	S825810	55-GAL	LA-MHD01.001	**NOT INCLUDED** in NCR-LANL-0509-09, R.0, but **WILL BE RE-EVALUATED AND RE-ASSIGNED TO LA-MIN02-V.001** because it was included on the LANL list of 291 nitrate salt containers.	N/A	N/A
214	**S825902**	S825902	55-GAL	LA-MHD01.001	**NOT INCLUDED** in NCR-LANL-0509-09, R.0, but **WILL BE RE-EVALUATED AND RE-ASSIGNED TO LA-MIN02-V.001** because it was included on the LANL list of 291 nitrate salt containers.	N/A	N/A
215	**S832140**	S832140	55-GAL	LA-MHD01.001	**NOT INCLUDED** in NCR-LANL-0509-09, R.0, but **WILL BE RE-EVALUATED AND RE-ASSIGNED TO LA-MIN02-V.001** because it was included on the LANL list of 291 nitrate salt containers.	N/A	N/A

216	**S832141**	S832141	85-GAL	LA-MHD01.001	**NOT INCLUDED** in NCR-LANL-0509-09, R.0, but **WILL BE RE-EVALUATED AND RE-ASSIGNED TO LA-MIN02-V.001** because it was included on the LANL list of 291 nitrate salt containers.	N/A	N/A
217	**S832143**	S832143	55-GAL	LA-MHD01.001	**NOT INCLUDED** in NCR-LANL-0509-09, R.0, but **WILL BE RE-EVALUATED AND RE-ASSIGNED TO LA-MIN02-V.001** because it was included on the LANL list of 291 nitrate salt containers.	N/A	N/A
218	**S832144**	S832144	55-GAL	LA-MHD01.001	**NOT INCLUDED** in NCR-LANL-0509-09, R.0, but **WILL BE RE-EVALUATED AND RE-ASSIGNED TO LA-MIN02-V.001** because it was included on the LANL list of 291 nitrate salt containers.	N/A	N/A
219	**S832145**	S832145	55-GAL	LA-MHD01.001	**NOT INCLUDED** in NCR-LANL-0509-09, R.0, but **WILL BE RE-EVALUATED AND RE-ASSIGNED TO LA-MIN02-V.001** because it was included on the LANL list of 291 nitrate salt containers.	N/A	N/A
220	**S832148**	S832148	85-GAL	LA-MHD01.001	**NOT INCLUDED** in NCR-LANL-0509-09, R.0, but **WILL BE RE-EVALUATED AND RE-ASSIGNED TO LA-MIN02-V.001** because it was included on the LANL list of 291 nitrate salt containers.	N/A	N/A
221	**S832150**	S832150	55-GAL	LA-MHD01.001	**NOT INCLUDED** in NCR-LANL-0509-09, R.0, but **WILL BE RE-EVALUATED AND RE-ASSIGNED TO LA-MIN02-V.001** because it was included on the LANL list of 291 nitrate salt containers.	N/A	N/A
222	**S832241**	S832241	85-GAL	LA-MHD01.001	**NOT INCLUDED** in NCR-LANL-0509-09, R.0, but **WILL BE RE-EVALUATED AND RE-ASSIGNED TO LA-MIN02-V.001** because it was included on the LANL list of 291 nitrate salt containers.	N/A	N/A
223	**S832320**	S832320	55-GAL	LA-MHD01.001	**NOT INCLUDED** in NCR-LANL-0509-09, R.0, but **WILL BE RE-EVALUATED AND RE-ASSIGNED TO LA-MIN02-V.001** because it was included on the LANL list of 291 nitrate salt containers.	N/A	N/A
224	**S832499**	S832499	55-GAL	LA-MHD01.001	**NOT INCLUDED** in NCR-LANL-0509-09, R.0, but **WILL BE RE-EVALUATED AND RE-ASSIGNED TO LA-MIN02-V.001** because it was included on the LANL list of 291 nitrate salt containers.	N/A	N/A

225	**S833037**	S833037	55-GAL	LA-MHD01.001	**NOT INCLUDED** in NCR-LANL-0509-09, R.0, but **WILL BE RE-EVALUATED AND RE-ASSIGNED TO LA-MIN02-V.001** because it was included on the LANL list of 291 nitrate salt containers.	N/A	N/A
226	**S833409**	S833409	55-GAL	LA-CIN01.001	**NOT INCLUDED** in NCR-LANL-0509-09, R.0, but **WILL BE RE-EVALUATED AND RE-ASSIGNED TO LA-MIN02-V.001** because it was included on the LANL list of 291 nitrate salt containers.	N/A	N/A
227	**S833481**	S833481	55-GAL	LA-MHD01.001	**NOT INCLUDED** in NCR-LANL-0509-09, R.0, but **WILL BE RE-EVALUATED AND RE-ASSIGNED TO LA-MIN02-V.001** because it was included on the LANL list of 291 nitrate salt containers.	N/A	N/A
228	**S833846**	S833846	55-GAL	LA-MHD01.001	**NOT INCLUDED** in NCR-LANL-0509-09, R.0, but **WILL BE RE-EVALUATED AND RE-ASSIGNED TO LA-MIN02-V.001** because it was included on the LANL list of 291 nitrate salt containers.	N/A	N/A
229	**S833937**	S833937	55-GAL	LA-MHD01.001	**NOT INCLUDED** in NCR-LANL-0509-09, R.0, but **WILL BE RE-EVALUATED AND RE-ASSIGNED TO LA-MIN02-V.001** because it was included on the LANL list of 291 nitrate salt containers.	N/A	N/A
230	**S834406**	S834406	85-GAL	LA-MHD01.001	**NOT INCLUDED** in NCR-LANL-0509-09, R.0, but **WILL BE RE-EVALUATED AND RE-ASSIGNED TO LA-MIN02-V.001** because it was included on the LANL list of 291 nitrate salt containers.	N/A	N/A
231	**S834633**	S834633	55-GAL	LA-MHD01.001	**NOT INCLUDED** in NCR-LANL-0509-09, R.0, but **WILL BE RE-EVALUATED AND RE-ASSIGNED TO LA-MIN02-V.001** because it was included on the LANL list of 291 nitrate salt containers.	N/A	N/A
232	**S835283**	S835283	55-GAL	LA-MHD01.001	**NOT INCLUDED** in NCR-LANL-0509-09, R.0, but **WILL BE RE-EVALUATED AND RE-ASSIGNED TO LA-MIN02-V.001** because it was included on the LANL list of 291 nitrate salt containers.	N/A	N/A
233	**S841292**	S841292	55-GAL	LA-MHD01.001	**NOT INCLUDED** in NCR-LANL-0509-09, R.0, but **WILL BE RE-EVALUATED AND RE-ASSIGNED TO LA-MIN02-V.001** because it was included on the LANL list of 291 nitrate salt containers.	N/A	N/A

234	**S842181**	S842181	55-GAL	LA-MHD01.001	**NOT INCLUDED** in NCR-LANL-0509-09, R.0, but **WILL BE RE-EVALUATED AND RE-ASSIGNED TO LA-MIN02-V.001** because it was included on the LANL list of 291 nitrate salt containers.	N/A	N/A
235	**S842234**	S842234	55-GAL	LA-MHD01.001	**NOT INCLUDED** in NCR-LANL-0509-09, R.0, but **WILL BE RE-EVALUATED AND RE-ASSIGNED TO LA-MIN02-V.001** because it was included on the LANL list of 291 nitrate salt containers.	N/A	N/A
236	**S851416**	S851416	85-GAL	LA-CIN01.001	**NOT INCLUDED** in NCR-LANL-0509-09, R.0, but **WILL BE RE-EVALUATED AND RE-ASSIGNED TO LA-MIN02-V.001** because it was included on the LANL list of 291 nitrate salt containers.	N/A	N/A
237	**S851426**	S851426	85-GAL	LA-MHD01.001	**NOT INCLUDED** in NCR-LANL-0509-09, R.0, but **WILL BE RE-EVALUATED AND RE-ASSIGNED TO LA-MIN02-V.001** because it was included on the LANL list of 291 nitrate salt containers.	N/A	N/A
238	**S851682**	S851682	85-GAL	LA-MHD01.001	**NOT INCLUDED** in NCR-LANL-0509-09, R.0, but **WILL BE RE-EVALUATED AND RE-ASSIGNED TO LA-MIN02-V.001** because it was included on the LANL list of 291 nitrate salt containers.	N/A	N/A
239	**S851739**	S851739	85-GAL	LA-MHD01.001	**NOT INCLUDED** in NCR-LANL-0509-09, R.0, but **WILL BE RE-EVALUATED AND RE-ASSIGNED TO LA-MIN02-V.001** because it was included on the LANL list of 291 nitrate salt containers.	N/A	N/A
240	**S851752**	S851752	55-GAL	LA-MHD01.001	**NOT INCLUDED** in NCR-LANL-0509-09, R.0, but **WILL BE RE-EVALUATED AND RE-ASSIGNED TO LA-MIN02-V.001** because it was included on the LANL list of 291 nitrate salt containers.	N/A	N/A
241	**S851764**	S851764	85-GAL	LA-MHD01.001	**NOT INCLUDED** in NCR-LANL-0509-09, R.0, but **WILL BE RE-EVALUATED AND RE-ASSIGNED TO LA-MIN02-V.001** because it was included on the LANL list of 291 nitrate salt containers.	N/A	N/A
242	**S851772**	S851772	85-GAL	LA-MHD01.001	**NOT INCLUDED** in NCR-LANL-0509-09, R.0, but **WILL BE RE-EVALUATED AND RE-ASSIGNED TO LA-MIN02-V.001** because it was included on the LANL list of 291 nitrate salt containers.	N/A	N/A

243	**S852513**	S852513	55-GAL	LA-MHD01.001	**NOT INCLUDED** in NCR-LANL-0509-09, R.0, but **WILL BE RE-EVALUATED AND RE-ASSIGNED TO LA-MIN02-V.001** because it was included on the LANL list of 291 nitrate salt containers.	N/A	N/A
244	**S852530**	S852530	85-GAL	LA-MHD01.001	**NOT INCLUDED** in NCR-LANL-0509-09, R.0, but **WILL BE RE-EVALUATED AND RE-ASSIGNED TO LA-MIN02-V.001** because it was included on the LANL list of 291 nitrate salt containers.	N/A	N/A
245	**S852588**	S852588	55-GAL	LA-CIN01.001	**NOT INCLUDED** in NCR-LANL-0509-09, R.0, but **WILL BE RE-EVALUATED AND RE-ASSIGNED TO LA-MIN02-V.001** because it was included on the LANL list of 291 nitrate salt containers.	N/A	N/A
246	**S852590**	S852590	55-GAL	LA-MHD01.001	**NOT INCLUDED** in NCR-LANL-0509-09, R.0, but **WILL BE RE-EVALUATED AND RE-ASSIGNED TO LA-MIN02-V.001** because it was included on the LANL list of 291 nitrate salt containers.	N/A	N/A
247	**S852592**	S852592	85-GAL	LA-MHD01.001	**NOT INCLUDED** in NCR-LANL-0509-09, R.0, but **WILL BE RE-EVALUATED AND RE-ASSIGNED TO LA-MIN02-V.001** because it was included on the LANL list of 291 nitrate salt containers.	N/A	N/A
248	**S852593**	S852593	85-GAL	LA-MHD01.001	**NOT INCLUDED** in NCR-LANL-0509-09, R.0, but **WILL BE RE-EVALUATED AND RE-ASSIGNED TO LA-MIN02-V.001** because it was included on the LANL list of 291 nitrate salt containers.	N/A	N/A
249	**S852883**	S852883	55-GAL	LA-MHD01.001	**NOT INCLUDED** in NCR-LANL-0509-09, R.0, but **WILL BE RE-EVALUATED AND RE-ASSIGNED TO LA-MIN02-V.001** because it was included on the LANL list of 291 nitrate salt containers.	N/A	N/A
250	**S852895**	S852895	55-GAL	LA-MHD01.001	**NOT INCLUDED** in NCR-LANL-0509-09, R.0, but **WILL BE RE-EVALUATED AND RE-ASSIGNED TO LA-MIN02-V.001** because it was included on the LANL list of 291 nitrate salt containers.	N/A	N/A
251	**S852923**	S852923	55-GAL	LA-MHD01.001	**NOT INCLUDED** in NCR-LANL-0509-09, R.0, but **WILL BE RE-EVALUATED AND RE-ASSIGNED TO LA-MIN02-V.001** because it was included on the LANL list of 291 nitrate salt containers.	N/A	N/A

252	**S852931**	S852931	85-GAL	LA-MHD01.001	**NOT INCLUDED** in NCR-LANL-0509-09, R.0, but **WILL BE RE-EVALUATED AND RE-ASSIGNED TO LA-MIN02-V.001** because it was included on the LANL list of 291 nitrate salt containers.	N/A	N/A
253	**S853006**	S853006	85-GAL	LA-MHD01.001	**NOT INCLUDED** in NCR-LANL-0509-09, R.0, but **WILL BE RE-EVALUATED AND RE-ASSIGNED TO LA-MIN02-V.001** because it was included on the LANL list of 291 nitrate salt containers.	N/A	N/A
254	**S853279**	S853279	55-GAL	LA-MHD01.001	**NOT INCLUDED** in NCR-LANL-0509-09, R.0, but **WILL BE RE-EVALUATED AND RE-ASSIGNED TO LA-MIN02-V.001** because it was included on the LANL list of 291 nitrate salt containers.	N/A	N/A
255	**S853326**	S853326	55-GAL	LA-MHD01.001	**NOT INCLUDED** in NCR-LANL-0509-09, R.0, but **WILL BE RE-EVALUATED AND RE-ASSIGNED TO LA-MIN02-V.001** because it was included on the LANL list of 291 nitrate salt containers.	N/A	N/A
256	**S853492**	S853492	55-GAL	LA-MHD01.001	**NOT INCLUDED** in NCR-LANL-0509-09, R.0, but **WILL BE RE-EVALUATED AND RE-ASSIGNED TO LA-MIN02-V.001** because it was included on the LANL list of 291 nitrate salt containers.	N/A	N/A
257	**S853641**	S853641	55-GAL	LA-MHD01.001	**NOT INCLUDED** in NCR-LANL-0509-09, R.0, but **WILL BE RE-EVALUATED AND RE-ASSIGNED TO LA-MIN02-V.001** because it was included on the LANL list of 291 nitrate salt containers.	N/A	N/A
258	**S853771**	S853771	55-GAL	LA-MHD01.001	**NOT INCLUDED** in NCR-LANL-0509-09, R.0, but **WILL BE RE-EVALUATED AND RE-ASSIGNED TO LA-MIN02-V.001** because it was included on the LANL list of 291 nitrate salt containers.	N/A	N/A
259	**S853898**	S853898	55-GAL	LA-MHD01.001	**NOT INCLUDED** in NCR-LANL-0509-09, R.0, but **WILL BE RE-EVALUATED AND RE-ASSIGNED TO LA-MIN02-V.001** because it was included on the LANL list of 291 nitrate salt containers.	N/A	N/A
260	**S853899**	S853899	55-GAL	LA-MHD01.001	**NOT INCLUDED** in NCR-LANL-0509-09, R.0, but **WILL BE RE-EVALUATED AND RE-ASSIGNED TO LA-MIN02-V.001** because it was included on the LANL list of 291 nitrate salt containers.	N/A	N/A

261	**S854616**	S854616	55-GAL	LA-MHD01.001	**NOT INCLUDED** in NCR-LANL-0509-09, R.0, but **WILL BE RE-EVALUATED AND RE-ASSIGNED TO LA-MIN02-V.001** because it was included on the LANL list of 291 nitrate salt containers.	N/A	N/A
262	**S855126**	S855126	55-GAL	LA-MHD01.001	**NOT INCLUDED** in NCR-LANL-0509-09, R.0, but **WILL BE RE-EVALUATED AND RE-ASSIGNED TO LA-MIN02-V.001** because it was included on the LANL list of 291 nitrate salt containers.	N/A	N/A
263	**S855139**	S855139	85-GAL	LA-MHD01.001	**NOT INCLUDED** in NCR-LANL-0509-09, R.0, but **WILL BE RE-EVALUATED AND RE-ASSIGNED TO LA-MIN02-V.001** because it was included on the LANL list of 291 nitrate salt containers.	N/A	N/A
264	**S855216**	S855216	85-GAL	LA-MHD01.001	**NOT INCLUDED** in NCR-LANL-0509-09, R.0, but **WILL BE RE-EVALUATED AND RE-ASSIGNED TO LA-MIN02-V.001** because it was included on the LANL list of 291 nitrate salt containers.	N/A	N/A
265	**S855240**	S855240	55-GAL	LA-MHD01.001	**NOT INCLUDED** in NCR-LANL-0509-09, R.0, but **WILL BE RE-EVALUATED AND RE-ASSIGNED TO LA-MIN02-V.001** because it was included on the LANL list of 291 nitrate salt containers.	N/A	N/A
266	**S855290**	S855290	55-GAL	LA-MHD01.001	**NOT INCLUDED** in NCR-LANL-0509-09, R.0, but **WILL BE RE-EVALUATED AND RE-ASSIGNED TO LA-MIN02-V.001** because it was included on the LANL list of 291 nitrate salt containers.	N/A	N/A
267	**S855566**	S855566	85-GAL	LA-MHD01.001	**NOT INCLUDED** in NCR-LANL-0509-09, R.0, but **WILL BE RE-EVALUATED AND RE-ASSIGNED TO LA-MIN02-V.001** because it was included on the LANL list of 291 nitrate salt containers.	N/A	N/A
268	**S855677**	S855677	55-GAL	LA-CIN01.001-Cans	**NOT INCLUDED** in NCR-LANL-0509-09, R.0, but **WILL BE RE-EVALUATED AND RE-ASSIGNED TO LA-MIN02-V.001** because it was included on the LANL list of 291 nitrate salt containers.	N/A	N/A
269	**S855793**	S855793	85-GAL	LA-MHD01.001	**NOT INCLUDED** in NCR-LANL-0509-09, R.0, but **WILL BE RE-EVALUATED AND RE-ASSIGNED TO LA-MIN02-V.001** because it was included on the LANL list of 291 nitrate salt containers.	N/A	N/A

270	S855943	S855943	55-GAL	LA-MIN04-S.001	**NOT INCLUDED** in NCR-LANL-0509-09, R.0, but **WILL BE RE-EVALUATED AND RE-ASSIGNED TO LA-MIN02-V.001** because it was included on the LANL list of 291 nitrate salt containers.	N/A	N/A
271	**S860014**	S860014	85-GAL	LA-MHD01.001	**NOT INCLUDED** in NCR-LANL-0509-09, R.0, but **WILL BE RE-EVALUATED AND RE-ASSIGNED TO LA-MIN02-V.001** because it was included on the LANL list of 291 nitrate salt containers.	N/A	N/A
272	**S860093**	S860093	55-GAL	LA-MHD01.001	**NOT INCLUDED** in NCR-LANL-0509-09, R.0, but **WILL BE RE-EVALUATED AND RE-ASSIGNED TO LA-MIN02-V.001** because it was included on the LANL list of 291 nitrate salt containers.	N/A	N/A
273	**S860095**	S860095	55-GAL	LA-MHD01.001	**NOT INCLUDED** in NCR-LANL-0509-09, R.0, but **WILL BE RE-EVALUATED AND RE-ASSIGNED TO LA-MIN02-V.001** because it was included on the LANL list of 291 nitrate salt containers.	N/A	N/A
274	**S861975**	S861975	55-GAL	LA-MHD01.001	**NOT INCLUDED** in NCR-LANL-0509-09, R.0, but **WILL BE RE-EVALUATED AND RE-ASSIGNED TO LA-MIN02-V.001** because it was included on the LANL list of 291 nitrate salt containers.	N/A	N/A
275	**S861976**	S861976	55-GAL	LA-MHD01.001	**NOT INCLUDED** in NCR-LANL-0509-09, R.0, but **WILL BE RE-EVALUATED AND RE-ASSIGNED TO LA-MIN02-V.001** because it was included on the LANL list of 291 nitrate salt containers.	N/A	N/A
276	**S861980**	S861980	55-GAL	LA-MHD01.001	**NOT INCLUDED** in NCR-LANL-0509-09, R.0, but **WILL BE RE-EVALUATED AND RE-ASSIGNED TO LA-MIN02-V.001** because it was included on the LANL list of 291 nitrate salt containers.	N/A	N/A
277	**S861995**	S861995	85-GAL	LA-MHD01.001	**NOT INCLUDED** in NCR-LANL-0509-09, R.0, but **WILL BE RE-EVALUATED AND RE-ASSIGNED TO LA-MIN02-V.001** because it was included on the LANL list of 291 nitrate salt containers.	N/A	N/A
278	**S862241**	S862241	55-GAL	LA-MHD01.001	**NOT INCLUDED** in NCR-LANL-0509-09, R.0, but **WILL BE RE-EVALUATED AND RE-ASSIGNED TO LA-MIN02-V.001** because it was included on the LANL list of 291 nitrate salt containers.	N/A	N/A

279	**S862255**	S862255	55-GAL	LA-MHD01.001	**NOT INCLUDED** in NCR-LANL-0509-09, R.0, but **WILL BE RE-EVALUATED AND RE-ASSIGNED TO LA-MIN02-V.001** because it was included on the LANL list of 291 nitrate salt containers.	N/A	N/A
280	**S863789**	S863789	55-GAL	LA-MHD01.001	**NOT INCLUDED** in NCR-LANL-0509-09, R.0, but **WILL BE RE-EVALUATED AND RE-ASSIGNED TO LA-MIN02-V.001** because it was included on the LANL list of 291 nitrate salt containers.	N/A	N/A
281	**S864662**	S864662	55-GAL	LA-MHD01.001	**NOT INCLUDED** in NCR-LANL-0509-09, R.0, but **WILL BE RE-EVALUATED AND RE-ASSIGNED TO LA-MIN02-V.001** because it was included on the LANL list of 291 nitrate salt containers.	N/A	N/A
282	**S864663**	S864663	55-GAL	LA-MHD01.001	**NOT INCLUDED** in NCR-LANL-0509-09, R.0, but **WILL BE RE-EVALUATED AND RE-ASSIGNED TO LA-MIN02-V.001** because it was included on the LANL list of 291 nitrate salt containers.	N/A	N/A
283	**S864694**	S864694	85-GAL	LA-MHD01.001	**NOT INCLUDED** in NCR-LANL-0509-09, R.0, but **WILL BE RE-EVALUATED AND RE-ASSIGNED TO LA-MIN02-V.001** because it was included on the LANL list of 291 nitrate salt containers.	N/A	N/A
284	**S870065**	S870065	85-GAL	LA-MHD01.001	**NOT INCLUDED** in NCR-LANL-0509-09, R.0, but **WILL BE RE-EVALUATED AND RE-ASSIGNED TO LA-MIN02-V.001** because it was included on the LANL list of 291 nitrate salt containers.	N/A	N/A
285	**S870213**	S870213	85-GAL	LA-MHD01.001	**NOT INCLUDED** in NCR-LANL-0509-09, R.0, but **WILL BE RE-EVALUATED AND RE-ASSIGNED TO LA-MIN02-V.001** because it was included on the LANL list of 291 nitrate salt containers.	N/A	N/A
286	**S870338**	S870338	85-GAL	LA-MHD01.001	**NOT INCLUDED** in NCR-LANL-0509-09, R.0, but **WILL BE RE-EVALUATED AND RE-ASSIGNED TO LA-MIN02-V.001** because it was included on the LANL list of 291 nitrate salt containers.	N/A	N/A
287	**S870381**	S870381	85-GAL	LA-MHD01.001	**NOT INCLUDED** in NCR-LANL-0509-09, R.0, but **WILL BE RE-EVALUATED AND RE-ASSIGNED TO LA-MIN02-V.001** because it was included on the LANL list of 291 nitrate salt containers.	N/A	N/A

288	**S870475**	S870475	55-GAL	LA-MHD01.001	**NOT INCLUDED** in NCR-LANL-0509-09, R.0, but **WILL BE RE-EVALUATED AND RE-ASSIGNED TO LA-MIN02-V.001** because it was included on the LANL list of 291 nitrate salt containers.	N/A	N/A
289	**S870478**	S870478	85-GAL	LA-MHD01.001	**NOT INCLUDED** in NCR-LANL-0509-09, R.0, but **WILL BE RE-EVALUATED AND RE-ASSIGNED TO LA-MIN02-V.001** because it was included on the LANL list of 291 nitrate salt containers.	N/A	N/A
290	**S873554**	S873554	85-GAL	LA-MHD01.001	**NOT INCLUDED** in NCR-LANL-0509-09, R.0, but **WILL BE RE-EVALUATED AND RE-ASSIGNED TO LA-MIN02-V.001** because it was included on the LANL list of 291 nitrate salt containers.	N/A	N/A
291	**S881570**	S881570	85-GAL	LA-MHD01.001	**NOT INCLUDED** in NCR-LANL-0509-09, R.0, but **WILL BE RE-EVALUATED AND RE-ASSIGNED TO LA-MIN02-V.001** because it was included on the LANL list of 291 nitrate salt containers.	N/A	N/A
292	**S881607**	S881607	85-GAL	LA-MHD01.001	**NOT INCLUDED** in NCR-LANL-0509-09, R.0, but **WILL BE RE-EVALUATED AND RE-ASSIGNED TO LA-MIN02-V.001** because it was included on the LANL list of 291 nitrate salt containers.	N/A	N/A
293	**S891279**	S891279	85-GAL	LA-MHD01.001	**NOT INCLUDED** in NCR-LANL-0509-09, R.0, but **WILL BE RE-EVALUATED AND RE-ASSIGNED TO LA-MIN02-V.001** because it was included on the LANL list of 291 nitrate salt containers.	N/A	N/A
294	**S891387**	S891387	85-GAL	LA-MHD01.001	**NOT INCLUDED** in NCR-LANL-0509-09, R.0, but **WILL BE RE-EVALUATED AND RE-ASSIGNED TO LA-MIN02-V.001** because it was included on the LANL list of 291 nitrate salt containers.	N/A	N/A
295	**S891513**	S891513	55-GAL	LA-MHD01.001	**NOT INCLUDED** in NCR-LANL-0509-09, R.0, but **WILL BE RE-EVALUATED AND RE-ASSIGNED TO LA-MIN02-V.001** because it was included on the LANL list of 291 nitrate salt containers.	N/A	N/A
296	**S892963**	S892963	85-GAL	LA-MHD01.001	**NOT INCLUDED** in NCR-LANL-0509-09, R.0, but **WILL BE RE-EVALUATED AND RE-ASSIGNED TO LA-MIN02-V.001** because it was included on the LANL list of 291 nitrate salt containers.	N/A	N/A

297	**S900215**	S900215	85-GAL	LA-MHD01.001	**NOT INCLUDED** in NCR-LANL-0509-09, R.0, but **WILL BE RE-EVALUATED AND RE-ASSIGNED TO LA-MIN02-V.001** because it was included on the LANL list of 291 nitrate salt containers.	N/A	N/A
298	**S901114**	S901114	85-GAL	LA-MHD01.001	**NOT INCLUDED** in NCR-LANL-0509-09, R.0, but **WILL BE RE-EVALUATED AND RE-ASSIGNED TO LA-MIN02-V.001** because it was included on the LANL list of 291 nitrate salt containers.	N/A	N/A
299	**S910170**	S910170	55-GAL	LA-MHD01.001	**NOT INCLUDED** in NCR-LANL-0509-09, R.0, but **WILL BE RE-EVALUATED AND RE-ASSIGNED TO LA-MIN02-V.001** because it was included on the LANL list of 291 nitrate salt containers.	N/A	N/A

Attachment B

NCR-LANL-0509-09: Disposition of Forty-Eight (48) Suspected Non-Cemented, Evaporator Salt Containers - DR 36

P2010 Information Release Form

This form is to be completed and submitted to the Records Management Coordinator with copies BEFORE you present or submit for release any technical work.	Package for review must include: 1. Copy of submission 2. Completed **P2010 Information Release Form** and **Cover sheet** on each submission. 3. Completed **Records Submittal Form** for each submission submitted to RMDC.
P2010- 3256/ERID-214565	

1. Author(s) name(s)					2. Author(s) Signature & Date
Last	First	Middle	Z #	Group (or affiliation)	
Fitzgerald	R		198464	LTP-SSS/CCP	4/2/2012

3. Title of Article (in caps: spell out all symbols):
Disposition of Forty-Eight (48) Suspected Non-Cemented, Evaporator Salt Containers – DR036

4. Type of Information:	5. Intended For:
X Acceptable Knowledge (AK) reports, radioisotope data, and/or source documents	CCP & Public Release
☐ Other (**Must be PROJECT 2010, specific):** _____	6. Particulars: NONE

7. Z number, Name and Phone of contact for notification of release	Mail Stop
198464, Randy Fitzgerald, X73074, 505-231-7582 (cell)	J962

8. Typed/Printed Name of Derivative Classifier	Signature and Date
Teresa L. Tingey	4/02/2012

☐ Unclassified	☐ Unclassified, Limited Explain:

9. P2010 Public Release Official	Signature and Date:
Teresa L. Tingey	4/02/2012
10. Typed/Printed Name of Responsible Author/Requestor	**Signature and Date:**
Randy Fitzgerald	4/02/2012
11. TWPS Operations Manager	**Signature and Date:**
Stephanie Griego	FOR STEPHANIE GREIGO 4/02/2012

P2010- 3256/ERID-214565

Approved for public release:

Title:	Disposition of Forty-Eight (48) Suspected Non-Cemented, Evaporator Salt Containers - DR036
Author(s):	R. Fitzgerald
Submitted to:	CCP and Public Release

Attachment 11 – Acceptable Knowledge Source Document Discrepancy Resolution

Waste Stream Number(s): LA-MHD01.001, LA-CIN01.001, LA-MIN02-V.001 (CCP-AK-LANL-006)

Waste Stream Description(s): Heterogeneous Debris, Cemented Inorganics, Absorbed Liquids

AK Source Document Discrepancy Form Tracking Number: DR036 – Disposition of Forty-Eight (48) Suspected Non-Cemented, Evaporator Salt Containers

Tracking #	Category[a]	Title	Document/Rev#	Author	Date	Publisher	Page #
	Pub.	Central Characterization Project Acceptable Knowledge Summary Report for LANL TA-55 Mixed TRU Waste	CCP-AK-LANL-006, Rev. 11	CCP	9/23/2011	N/A	All
	Unpub.	Central Characterization Project Non-Conformance Report	NCR-LANL-0509-09, Rev. 0	CCP	6/22/2009	N/A	All

Nature of Discrepancy:

As a result of new AK information received by CCP AK from the generator (i.e., TA-55 Cement Fixation Group) forty-eight (48) containers that were on the AK Tracking Spreadsheet (AKTSS) (on June 22, 2009, when NCR was written) were placed on HOLD because it was suspected that these forty eight (48) containers were non-cemented, evaporator salts that might warrant re-assignment to a separate waste stream. Based on the potential changes to the AK waste stream for these containers, an NCR was written in accordance with CCP-TP-005, Rev. 24, Section 4.8.1.

Resolution: (See Table 1, "Justification for Removal from AKTSS"):

Forty (40) of the 48 containers were removed from the AKTSS based on a list of containers provided by LANL that indicate these 40 containers are non-cemented, evaporator salts and are awaiting further investigation by LANL. Eight (8) containers are NOT non-cemented, evaporator salts and are currently assigned to the correct waste stream. These 8 containers will remain on the AKTSS and the HOLD will be removed.

48 containers listed in NCR:

14 were assigned to LA-CIN01.001 (cemented)
33 were assigned to LA-MHD01.001 (debris... includes suspected S3000 drums containing salts)
1 was assigned to LA-MIN02-V.001 (absorbed liquids)

Based on original generator paperwork, which indicates 40 of the 48 containers were non-cemented, unconsolidated salts, the 48 containers listed in the NCR were categorized as:

Of the 14 containers assigned to LA-CIN01.001, nine (9) were identified as non-cemented, evaporator salts and were removed from the AKTSS and five (5) were correctly assigned to LA-CIN01.001.

Of the 33 containers assigned to LA-MHD01.001, thirty-one (31) were identified as non-cemented, evaporator salts and were removed from the AKTSS and two (2) were correctly assigned to LA-MHD01.001.

The 1 container assigned to LA-MIN02-V.001; this container was properly assigned to waste stream LA-MIN02-V.001

With the removal of these forty-one (40) containers from the AKTSS, the physical, chemical, and radiological characterization of the remaining containers in the waste streams are consistent with the waste stream descriptions in CCP-AK-LANL-006.

Discrepancy Resolved: [X] Yes [ ] No

Acceptable Knowledge Expert: Randy Fitzgerald / [signature] Date: 4/02/2012
Print Sign

Site Project Manager: Terri-Anne Groover / [signature] for T. Groover Date: 4/02/2012
Print Sign

[a] Published Document or Controlled Database (Pub.); Unpublished Data (Unpub.); Internal Procedure or Note (Proc.); Correspondence (Corr.); or Discrepancy (Disc.)

Table 1

Disposition of 48 Suspected Non-Cemented, Evaporator Salt Containers

AK6 DR036

	CONTAINER No.	ORIGINAL WASTE STREAM ASSIGNMENT	DISPOSITION
1	**S841627**	**LA-CIN01.001**	REMOVED FROM AKTSS
2	**S843593**	**LA-CIN01.001**	REMOVED FROM AKTSS
3	**S843594**	**LA-CIN01.001**	REMOVED FROM AKTSS
4	**S843672**	**LA-CIN01.001**	REMOVED FROM AKTSS
5	**S843673**	**LA-CIN01.001**	REMOVED FROM AKTSS
6	**S844602**	**LA-CIN01.001**	REMOVED FROM AKTSS
7	S844608	LA-CIN01.001	ASSIGNED TO CORRECT WASTE STREAM
8	S845135	LA-CIN01.001	ASSIGNED TO CORRECT WASTE STREAM
9	**S846055**	**LA-CIN01.001**	REMOVED FROM AKTSS
10	**S851415**	**LA-CIN01.001**	REMOVED FROM AKTSS
11	**S851418**	**LA-CIN01.001**	REMOVED FROM AKTSS
12	S851525	LA-CIN01.001	ASSIGNED TO CORRECT WASTE STREAM
13	S852596	LA-CIN01.001	ASSIGNED TO CORRECT WASTE STREAM
14	S852971	LA-CIN01.001	ASSIGNED TO CORRECT WASTE STREAM
15	**S841239**	**LA-MHD01.001**	REMOVED FROM AKTSS
16	**S841240**	**LA-MHD01.001**	REMOVED FROM AKTSS
17	S841251	LA-MHD01.001	REMOVED FROM AKTSS
18	**S841314**	**LA-MHD01.001**	REMOVED FROM AKTSS
19	**S841320**	**LA-MHD01.001**	REMOVED FROM AKTSS
20	**S842213**	**LA-MHD01.001**	REMOVED FROM AKTSS
21	**S842463**	**LA-MHD01.001**	REMOVED FROM AKTSS
22	**S842526**	**LA-MHD01.001**	REMOVED FROM AKTSS
23	**S842528**	**LA-MHD01.001**	REMOVED FROM AKTSS
24	**S843528**	**LA-MHD01.001**	REMOVED FROM AKTSS
25	**S844213**	**LA-MHD01.001**	REMOVED FROM AKTSS
26	**S844215**	**LA-MHD01.001**	REMOVED FROM AKTSS
27	**S844253**	**LA-MHD01.001**	REMOVED FROM AKTSS
28	**S844573**	**LA-MHD01.001**	REMOVED FROM AKTSS

Table 1

Disposition of 48 Suspected Non-Cemented, Evaporator Salt Containers

AK6 DR036

29	S844684	LA-MHD01.001	REMOVED FROM AKTSS
30	S844689	LA-MHD01.001	REMOVED FROM AKTSS
31	S845031	LA-MHD01.001	REMOVED FROM AKTSS
32	S845072	LA-MHD01.001	REMOVED FROM AKTSS
33	S845104	LA-MHD01.001	REMOVED FROM AKTSS
34	S845194	LA-MHD01.001	ASSIGNED TO CORRECT WASTE STREAM
35	S845201	LA-MHD01.001	REMOVED FROM AKTSS
36	S845338	LA-MHD01.001	REMOVED FROM AKTSS
37	S846037	LA-MHD01.001	REMOVED FROM AKTSS
38	S846088	LA-MHD01.001	REMOVED FROM AKTSS
39	S846096	LA-MHD01.001	REMOVED FROM AKTSS
40	S846107	LA-MHD01.001	REMOVED FROM AKTSS
41	S846132	LA-MHD01.001	REMOVED FROM AKTSS
42	S846168	LA-MHD01.001	REMOVED FROM AKTSS
43	S846172	LA-MHD01.001	REMOVED FROM AKTSS
44	S846195	LA-MHD01.001	REMOVED FROM AKTSS
45	S846660	LA-MHD01.001	REMOVED FROM AKTSS
46	S851430	LA-MHD01.001	ASSIGNED TO CORRECT WASTE STREAM
47	S851436	LA-MHD01.001	REMOVED FROM AKTSS
48	S841295	LA-MIN02-V.001	ASSIGNED TO CORRECT WASTE STREAM

Attachment 1 – CCP Nonconformance Report (NCR)

NCR No. NCR-LANL-0509-09 **Revision 0**

1. Lot No./Heat No. or Serial No.: NA	2. Process (NDA, HSG, NDE, VE, Other): AK	3. Batch Data Report # (s): SEE ATTACHMENT /
4. Order/Work Order/Job Control Number (as applicable): NA	5. PO #: NA 6. Supplier: NA	Container #(s): SEE ATTACHMENT /

DESCRIPTION OF NONCONFORMANCE

7. (a) CCP HOLD TAGS SHALL BE APPLIED UNLESS JUSTIFIED AS FOLLOWS:

☐ < 100 nCi/g ☐ Prohibited Item ☐ >500 ppmv Flamm. VOCs

☐ E-Flag ☐ Receiving Inspection ☐ Transportation ☐ WWIS ☒ Other

(b) Description of Nonconformance
Required Condition (Implementing Procedure, Revision, Section & Text)

IF re-evaluation is warranted as a result of 1) inconsistencies noted during the process of comparing AK information to characterization results OR 2) the initiation of an NCR(s) that identifies the potential changes to the AK of a waste stream, (including NCRs generated as a result of discrepancies identified during confirmation testing performed by the Permittee, THEN notify the AKE.

[CCP Acceptable Knowledge Documentation, CCP-TP-005, Rev. 18, Sec. 4.8.1]

(c). Actual Condition

As result of new AK information from the generator, *i.e.*, TA55 Cement Fixation Group, forty-eight (48) drums that are currently on the AKTSS have been identified as potentially, non-cemented Evaporator Salts, which would require these drums to be re-assigned to a separate waste stream. As of 06/22/2009, only one of these drums, *i.e.*, drum no. S841320, has been through characterization, i.e., LA-RTR2-08-0192

(d). Attachments:

Attachment 1 - List of Suspected Non-Cemented Evaporator Salt Containers

8. NCR Originator (Print name, sign, and date) Randy Fitzgerald June 22, 2009	9. CCP QA Engineer or Designee Validation (Print name, sign, and date) CM Gomez 6/23/09
9a. Does this NCR have the potential to impact AK? ☒ YES ☐ NO ☐ INDETERMINATE If YES or INDETERMINATE, then apply Trend Code L in Block 12.	
10. Significant Condition? ☐ YES ☒ NO ☐ NA	11. Recurring Condition? ☐ YES ☒ NO (If YES, List NCRs/CARs)
12. Trend Code: L	13. Responsible Manager: Margaret Martinez

Attachment 1 – CCP Nonconformance Report (NCR)

NCR No. NCR-LANL-0509-09 **Revision 0**

INTERIM DISPOSITION

14. Interim Disposition (Check One)

☐ N/A (See final Disposition) ☒ Hold ☐ Conditional Accept ☐ Conditional Use
☐ Sort ☐ Reinspect/Retest ☐ Remediate

(a) Instructions for Completion of the Interim Disposition:

AKE to contact generator and review container paperwork to determine if the suspect non-cemented evaporator salts drums should be assigned to a separate waste stream.

INTERIM DISPOSITION APPROVALS

15. Responsible Manager/Individual (Print, sign, and date)	16. CCP QA Engineer or Designee (Print, sign and date)
Margie Martinez Margie Martinez 6-23-09	6/23/09 C McGomer Christine McGomer
Additional Approvals: (Print, sign and date)	Additional Approvals: (Print, sign and date)

COMPLETION OF INTERIM DISPOSITION

17. Interim Disposition Complete Responsible Manager/Individual: (Print, sign and date)

18. Interim Disposition Verified CCP QA Engineer: (Print, sign and date)

Attachment 1 – CCP Nonconformance Report (NCR)	
NCR No. NCR-LANL-0509-09	**Revision 0**
FINAL DISPOSITION	
19. Final Disposition (Check One) ☐ Use-As-Is ☐ Reject ☐ Repair ☐ Rework ☐ Scrap (a) Technical Justification (Required for Use-As-is and Repair dispositions, N/A for Reject, Scrap, or Rework dispositions.)	
(b) Disposition Instructions (Required for Reject and Scrap, N/A for Use-As-Is, Rework, and Repair)	
(c) Instructions for Completion of the Final Disposition, including Inspection Criteria (Required for Repair and Rework, N/A for Use-As-Is, Reject and Scrap)	
(d) Corrective Actions (Actions to Prevent Recurrence) - as required.	
FINAL DISPOSITION APPROVALS	
20. Responsible Manager/Individual: (Print, sign, and date)	21. CCP QA Engineer or Designee: (Print, sign, and date)
Additional Approvals: (Print, sign, and date)	Additional Approvals: (Print, sign, and date)
CLOSURE	
22. Final Disposition Complete Responsible Manager/Individual: (Print, sign, and date)	
23. (a) HOLD TAG removal has been validated and reconciled for all nonconforming items on the NCR. ☐ (b) Check if not applicable (N/A) and provide an explanation here or on a continuation sheet. ☐	
24. Final Disposition Verified – NCR Closed	CCP QA Engineer: (Print, sign, and date)

Attachment 2 – CCP Nonconformance Report (NCR) Continuation Sheet

NCR No. NCR-LANL-0509-09 Revision 0 Attachment # 1 Page 1 of 1

Continuation from Section Number: Section 3

LIST OF SUSPECTED NON-CEMENTED EVAPORATOR SALT CONTAINERS

	Drum No.	Associated BDRs		Drum No.	Associated BDRs
1	S841239	None	31	S845338	None
2	S841240	None	32	S846037	None
3	S841251	None	33	S846055	None
4	S841295	None	34	S846088	None
5	S841314	None	35	S846096	None
6	S841320	LA-RTR2-08-0192	36	S846107	None
7	S841627	None	37	S846132	None
8	S842213	None	38	S846168	None
9	S842463	None	39	S846172	None
10	S842526	None	40	S846195	None
11	S842528	None	41	S846660	None
12	S843528	None	42	S851415	None
13	S843593	None	43	S851418	None
14	S843594	None	44	S851430	None
15	S843672	None	45	S851436	None
16	S843673	None	46	S851525	None
17	S844213	None	47	S852596	None
18	S844215	None	48	S852971	None
19	S844253	None			
20	S844573	None			
21	S844602	None			
22	S844608	None			
23	S844684	None			
24	S844689	None			
25	S845031	None			
26	S845072	None			
27	S845104	None			
28	S845135	None			
29	S845194	None			
30	S845201	None			

Attachment C

Review of Nitrate Wastes Associated with Plutonium Purification and Recovery Operations at Los Alamos National Laboratory

LA-UR-14-24715
June 2014
EP2014-0286

Review of Nitrate Wastes Associated with Plutonium Purification and Recovery Operations at Los Alamos National Laboratory

Los Alamos
NATIONAL LABORATORY
EST. 1943

Prepared by the Environmental Programs Directorate

Los Alamos National Laboratory (LANL), operated by Los Alamos National Security (LANS), LLC, for the U.S. Department of Energy under Contract No. DE-AC52-06NA25396, has prepared this document. The public may copy and use this document without charge, provided that this notice and any statement of authorship are reproduced on all copies.

CONTENTS

1.0 INTRODUCTION 1
2.0 TA-21 DP WEST 1945–1947 1
3.0 TA-21 DP WEST 1947–1959 5
4.0 TA-21 DP WEST 1959–1978 6
5.0 TA-55 1978–1991 10
6.0 TA-55 1991 TO PRESENT 11
7.0 REVIEW OF POTENTIAL NITRATE SALT CONTAINERS STORED AT THE LABORATORY 11
8.0 CONCLUSIONS AND DISCUSSIONS 13
9.0 REFERENCES 14

Figures

Figure 1 Reproduction of the plutonium recovery plant flow process (LASL 1947) 2
Figure 2 Historical plutonium recovery flow sheet (LASL 1969). The discarded supernatant solutions were directed to the General's Tanks from 1945 to 1947. 3
Figure 3 Historical photograph of tank trailers used to transport liquid hydroxide and nitrate wastes from DP West plutonium recovery facility (building 21-2) to General's Tanks and TA 21 RLW facilities (LANL photograph No.6094, c. 1947). 4
Figure 4 General material flow in the TA-21 plutonium recovery operations from 1947 to 1959 that used packed columns for solvent exchange (LASL 1969) 6
Figure 5 General material flow in the TA-21 plutonium recovery operations 1959 to 1978 (LASL 1969). These general processes were transferred to TA-55. 7
Figure 6 Material flow procedure for nitrate anion exchange purification of plutonium at TA-21 from 1959 to 1978 and generally continued at TA-55 (LASL 1969) 8

Tables

Table 1 Volumes of Sediment and of Water Contained in the General's Tanks 5
Table 2 Summary of Belowgrade Containers in Pit 9 with Waste Code A25 (Leached Solids) 12

Attachments

Attachment 1 Photographs of Waste Liquid in tank and Access Covers, General's Tanks, Material Disposal Area A, Technical Area 21 17
Attachment 2 Unconsolidated Nitrate Salts in Belowgrade Containers Stored at Pit 9, Material Disposal Area G, Technical Area 54 20
Attachment 3 Excerpt from Los Alamos Scientific Laboratory Memorandum "Radioactive Wastes to DP-257 January through May 1973," no author noted, ER ID record No. 935 22
Attachment 4 Excerpted Table of LANL Waste Codes from "Final TRU Waste Inventory Work-Off Plan," Los Alamos National Laboratory Report LA UR 862932, J.L. Warren and A.E. Dross, Revised December 15,1986, Los Alamos, New Mexico 24
Attachment 5 Excerpted Appendices A and B from "Characterization of Transuranic Solid Wastes from a Plutonium Processing Facility," Los Alamos Scientific Laboratory report LA-5993, R. Mulkin, June 1975, Los Alamos, New Mexico. 26

1.0 INTRODUCTION

Plutonium purification and recovery operations using nitric acid have been central to Los Alamos National Laboratory (LANL or the Laboratory) since its inception in 1943. The primary assignment of the earliest chemistry division was to develop and apply the methods for the purification and recovery of uranium to the specifications of composition and purity set by the physics and engineering groups. It was primarily the role of uranium as a stand-in for plutonium that led to the first work on uranium purification. The essential purification step concentrated the uranium from gross amounts of impurities. The potential loss of plutonium during the purification process led to the establishment of a group that developed several methods for the recovery and concentration of plutonium from purification residues so the plutonium could be recycled (LASL 1947). The methods included recovery of plutonium from process solids and solutions, including metals, oxides, slags, crucibles, and solutions returned from chemical, physical, analytical, and metallurgical activities.

DP West at Technical Area 21 (TA-21), constructed during the end of World War II (WWII), became the Laboratory's plutonium processing facility until it was replaced by TA-55 in 1978. The need to recover plutonium from purification residues drove the expansion of metallurgical and chemical research programs at DP West. Thus, the processes for recovery of plutonium from purification residues increasingly required additional engineering and equipment, as did the waste products. Management of waste solutions with concentrations of impurities, including americium that created a radiation dose problem, was the focus of many engineered waste process changes at TA-21, TA-55, and TA-54. This report provides summary descriptions of the plutonium nitrate operations, process changes, methods of waste generation, and modes of storage and disposition. This report relies on archived reports, memoranda, and personnel interviews. It does not provide a comprehensive review of plutonium chemistry, nor does it include details for the populations of various waste categories. These details are available in the references provided.

2.0 TA-21 DP WEST 1945–1947

The first plutonium was processed at DP West on October 19, 1945. By the time plutonium purification and recovery operations were transferred from D Building to DP West, the tolerances for light-element impurities had been relaxed as a result of the knowledge gained from research. The purification process completely adopted the single oxalate extraction process by July 1946. In developing the methods for dissolving various materials that were sent to recovery, it was necessary to consider the problem of dissolving not only any known compound of plutonium, and some which were unknown, but also various metals, refractory materials, organic compounds, and other miscellaneous items. The recovery process involved the removal of small amounts of plutonium from large amounts of other elements. From 1945 to 1947, all basic supernatant solutions were radioassayed and the solutions containing approximately 1 mg/L (10^{-3} g/L) of plutonium were transferred to one of two 50,000-gal. underground storage tanks, known as the General's Tanks. The two tanks were constructed in 1945 to store recovery residues from plutonium operations from which no further recovery was then possible but were too great to discard.

Figure 1 depicts the plutonium recovery plant flow process used at DP West from 1945 to 1947 (LASL 1947). The recovery process involved the removal of small amounts of plutonium from large amounts of other elements. The recovery processes were almost entirely based on aqueous chemistry and relied on the insoluble nature of plutonium hydroxide. As with the plutonium purification process, organic materials were completely removed by evaporation in a steam bath, vacuum distillation, or acid treatment before further processing because the organics were not tolerated by the aqueous processes.

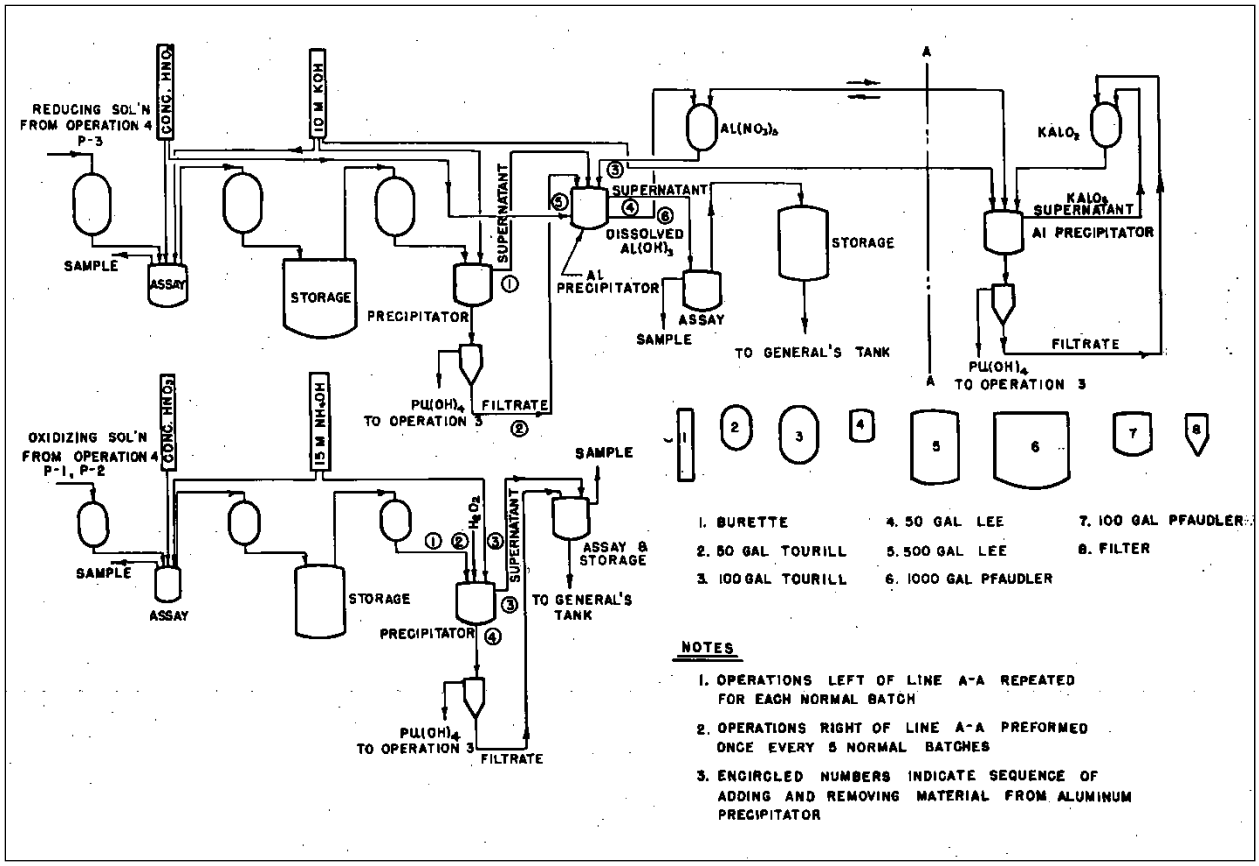

Figure 1 Reproduction of the plutonium recovery plant flow process (LASL 1947)

Figure 2 depicts the early plutonium recovery chemical flow sheet (LASL 1969). The final recovery processes for the majority of the volume of solutions were covered by two processes. The first involved a final treatment with aluminum nitrate to precipitate aluminum hydroxide as a plutonium carrier, and the filtrate solution was sent to what was thought to be recoverable storage in underground tanks. The second involved a solution with high calcium concentrations. These were not treated with aluminum nitrate but with hydrogen peroxide and ammonium hydroxide to precipitate plutonium hydroxide. The resulting supernatant solutions contained large amounts of calcium and magnesium, and these high-salt concentrations made accurate assay unlikely. The discarded supernatant solutions were transported by tank trailer (Figure 3) to the General's Tanks, for storage and possible recovery at a later date.

In 1974, it was decided that the two 50,000-gal. mild-steel tanks could be used to dispose of cement paste from the radioactive liquid waste (RLW) facility at 21-257. The tanks were never used to dispose of the cement paste, but preparations had been made to do so. Holes about 4 ft across were broken through the 8-in. reinforced concrete slab, the dirt removed to the tops of the tanks, and holes about 16-in. across cut in the top of each tank. It was found that the wastes in the tanks had naturally separated and that a layer of precipitated solids had collected in the bottoms of the tanks and a layer of supernatant liquid comprised the bulk of liquids in the tanks. Submersible pumps were used to pump the fluids to building 21-257. An estimated 40,000 gal. was held in the west tank (21-107) from the sodium hydroxide process and 9,000 gal. in the east tank (21-108) from the ammonium hydroxide process (LASL 1977).

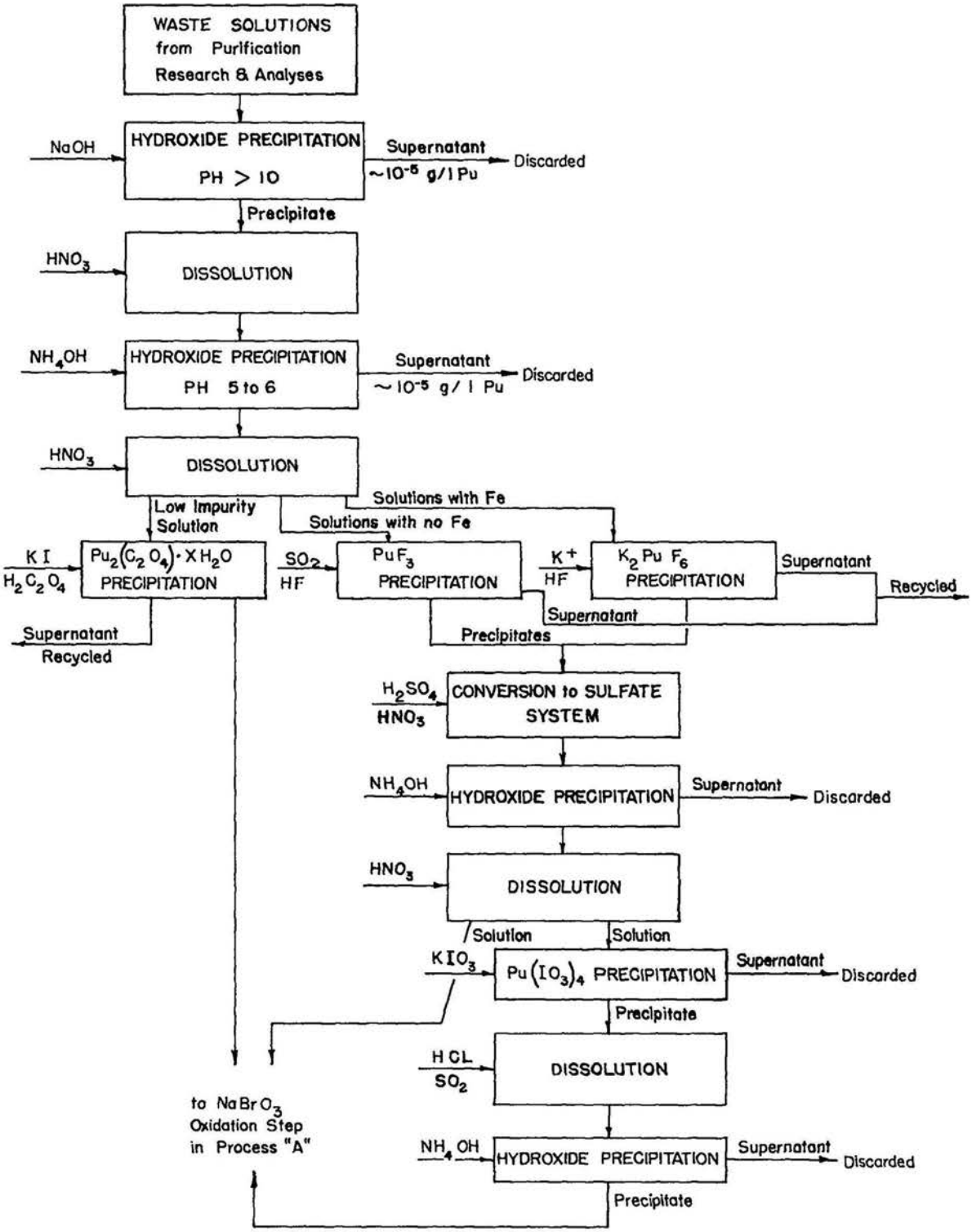

Figure 2 **Historical plutonium recovery flow sheet (LASL 1969). The discarded supernatant solutions were directed to the General's Tanks from 1945 to 1947.**

Figure 3 Historical photograph of tank trailers used to transport liquid hydroxide and nitrate wastes from DP West plutonium recovery facility (building 21-2) to General's Tanks and TA 21 RLW facilities (LANL photograph No.6094, c. 1947).

The entire contents of the east tank were transferred to the west tank, so the east tank could be used immediately to dispose of the cement paste. The liquids transferred to 21-257 were processed and released to DP Canyon, but the nitrate concentrations were so high the treatment plant could not process the liquids effectively. The plan for using the tanks for waste disposal was abandoned (LANL 1996). A few inches of plutonium-contaminated sediment and liquid were left in the bottoms of the two tanks as a heel. All pipes and access holes were sealed in the early 1980s, but these activities were poorly documented. No access ports or pipes remained.

The tanks represent part of Material Disposal Area (MDA) A, Solid Waste Management Unit (SWMU) 21-014, and are a Hazard Category (HC) 2 nuclear facility (LANL 2013a). Beginning in 2003, the former Environmental Restoration Program began efforts to access and characterize the tanks to design a potential remedy. In 2009, aluminum caissons were placed on the concrete slab on each tank to provide periodic access to the existing holes in the concrete and the tops of the tanks. The caissons (Attachment 1) are four-sided shoring boxes approximately 14 ft by 10 ft by 6 ft fitted with ½-in.-thick removable steel covers. In 2010, the tops of the tanks were exposed, and the tanks were accessed and sampled through the existing access holes after it was determined that no hydrogen-gas buildup had occurred. Photographs (Attachment 1) and physical and radiological measurements were obtained, and samples of the liquid and sediments in the two tanks were collected. The new data allowed preparation of as-found construction drawings and refinement of the volumes of the liquid and sediments in the bottoms of the tanks, as well as total activity. Table 1 summarizes the volumes of liquid and sediment in the tanks (LANL 2011a). The laser mapping also indicated that the tanks appear intact, but the west tank (21-107) may have settled from its original installation. The east tank appeared unaffected.

Table 1
Volumes of Sediment and of Liquid Contained in the General's Tanks

Tank	Total Volume (gal.)	Sediment Volume (gal.)	Liquid Volume (gal.)	Total Plutonium Activity (Ci)
East (21-108)	2,700	Max. 640	Max. 2,400	Max. 49
West (21-107)	2,700	1,850	880	Max. 182

The liquid and sediment samples were submitted to TA-50 RLW facility and the Chemistry and Metallurgy Research facility at TA-03 CMR, respectively, for analyses. The analytical data indicated the liquid from both tanks was found to contain little or no radioactivity but had high nitrate ion concentrations and were largely neutral pH (6.3 to 8.5). Some soil contamination was noted in the samples, probably from the overburden above the tanks or above the concrete slab. The sediment or sludge samples were found to have heterogeneous plutonium concentrations but consistent isotopic composition. Most of the activity in the samples was from Pu-239, with minimal contributions from Am-241 and U-235. The historical estimate of 21 curies (344 g) of plutonium (LASL 1977) may be low by an order of magnitude (Table 1). All sediment samples were high in magnesium, calcium, iron, aluminum, potassium, and sodium (LANL 2011b). The results of analysis by toxic characteristic leaching procedure (TCLP) indicated the tanks did not contain metals that would require assignment of Resource Conservation and Recovery Act hazardous waste codes. Samples of the salts observed on the inner metal surface (photograph of west tank in attachments) were collected but have not been analyzed to determine their composition (Criswell 2014c). They appear to be oxides or hydroxides formed on the mild steel but may have a nitrate component.

3.0 TA-21 DP WEST 1947–1959

It was apparent that storage of the basic solutions in the General's Tanks could not continue because of the large volumes of waste liquids and the capacity of the tanks. Investigations were thus conducted to determine methods to recover dilute concentrations of plutonium and reduce its concentrations to meet the tolerance limits for release to the canyons. Research continued on the recovery of low concentrations of plutonium from solutions for which ordinary recovery methods were impractical. In 1947, the Laboratory's experimental work with cation and anion ion exchange columns and solvent extraction processes led to the adoption of packed columns to use with tri-n-butyl phosphate (TBP) and cation exchange for plutonium purification. Use of the cation exchange columns was abandoned in 1952 because of the large volumes of waste liquid created by the dilution of high-salt solutions to sorb the plutonium on the exchange resin (LANL 1969). Figure 4 depicts the general material flow in the TA-21 plutonium recovery operations from 1947 to 1959.

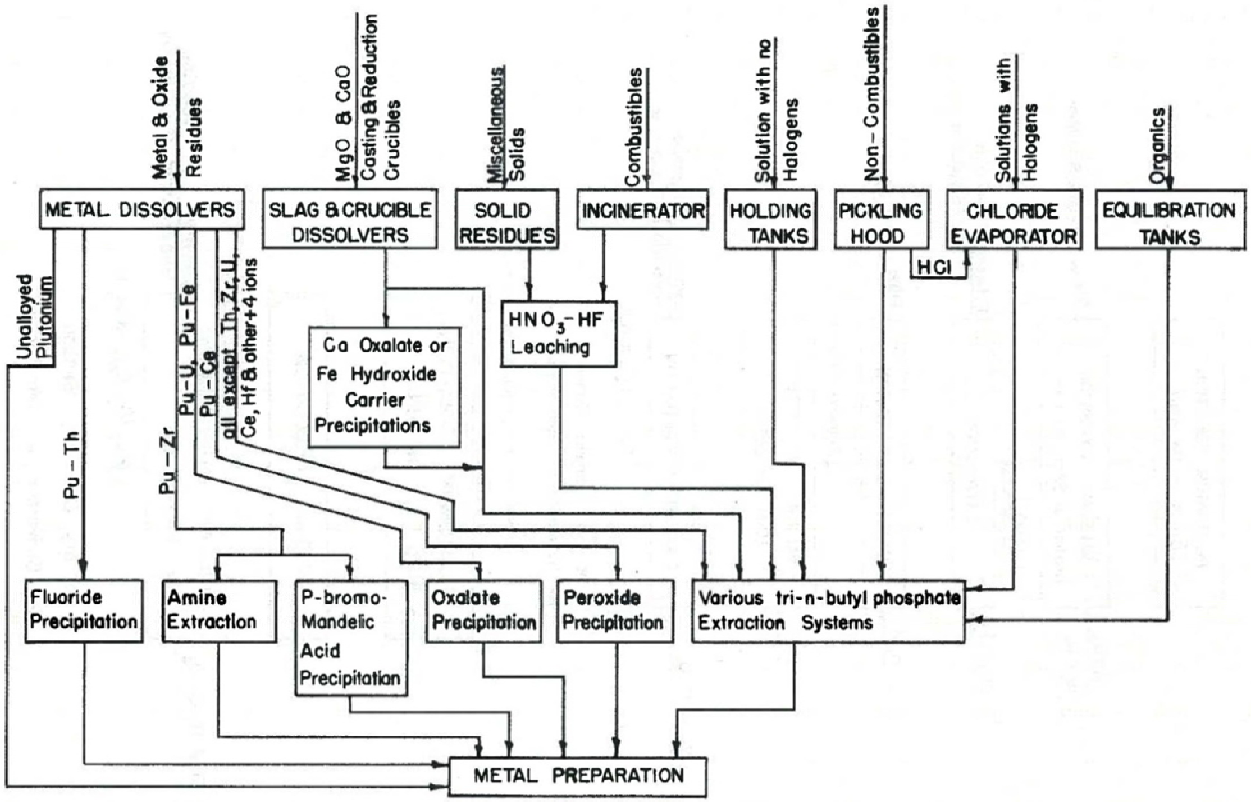

Figure 4 General material flow in the TA-21 plutonium recovery operations from 1947 to 1959 that used packed columns for solvent exchange (LASL 1969)

From 1945 to 1952, all liquids wastes from DP West were directed to four (4) interconnected absorption beds at MDA T. In the late 1940s, accumulation of suspended solids resulted in the construction of two (2) small RLW treatment facilities, one at TA-45 near TA-01, and the other at TA-21 near MDA T. Both relied on physical/chemical precipitation and sedimentation of radionuclide solids using an iron sulfate salt. The ferric sulfate was eventually replaced with ferric chloride. The TA-21 facility, 21-35, was also known as building 35 DPW. Both these facilities utilized flash mixers and flocculator systems to concentrate the radioactivity in a precipitate. The TA-21-35 facility was small and did not have a vacuum filter to dewater the precipitates. Until 1956, the precipitates created at TA-21-35 were drained to a trailer (Figure 3) and transferred to the TA-45 facility where they were drummed and sent for burial (LASL 1977). In 1956, a vacuum filter was installed at 21-35. The unconsolidated, plant sludge generated during this time period was sent to MDA C, TA-50, to be buried. Routine radioactive waste disposal at MDA G, at TA-54, began in January 1959, and the drummed plant sludge may have been disposed of MDA G after the last routine wastes were placed at MDA C in December 1958. LASL (1977) lists specific notebook numbers and dates for each area and date of usage. No estimate of wastes volumes is known, and no Laboratory records were reviewed for this report to confirm whether the plant sludge wastes were buried.

4.0 TA-21 DP WEST 1959–1978

In 1959, the use of solvent extraction columns was discontinued, and the entire TA-21 plutonium purification plant was converted to anion exchange processes. The nitrate anion exchange system, combined with precipitation processes, simplified plutonium purification process (LASL 1969). Figure 5

depicts the general material flow in the TA-21 plutonium recovery operations from 1959 until the operations were transferred from TA-21 to TA-55 in 1978. The general process for any residue was to place the plutonium in solution, sorb the plutonium onto the anion exchange resin, wash with 7 Molar (M) nitric acid (HNO_3) to remove the impurities, then elute the plutonium from the resin with hydroxylamine nitrate (Figure 6). Additional processing of the plutonium was necessary to produce the oxide. The wash cycle discard removed the majority of contaminants and impurities, including magnesium, calcium, iron, aluminum, and americium. A pilot-scale waste solution evaporator was installed in building 21-2 in 1977 that was intended to create design and operational data before new equipment was installed at TA-55. The concentrated solutions from the evaporator were sent back to anion exchange, and no nitrate salts were created in the experimental process (Ramsey 2014a).

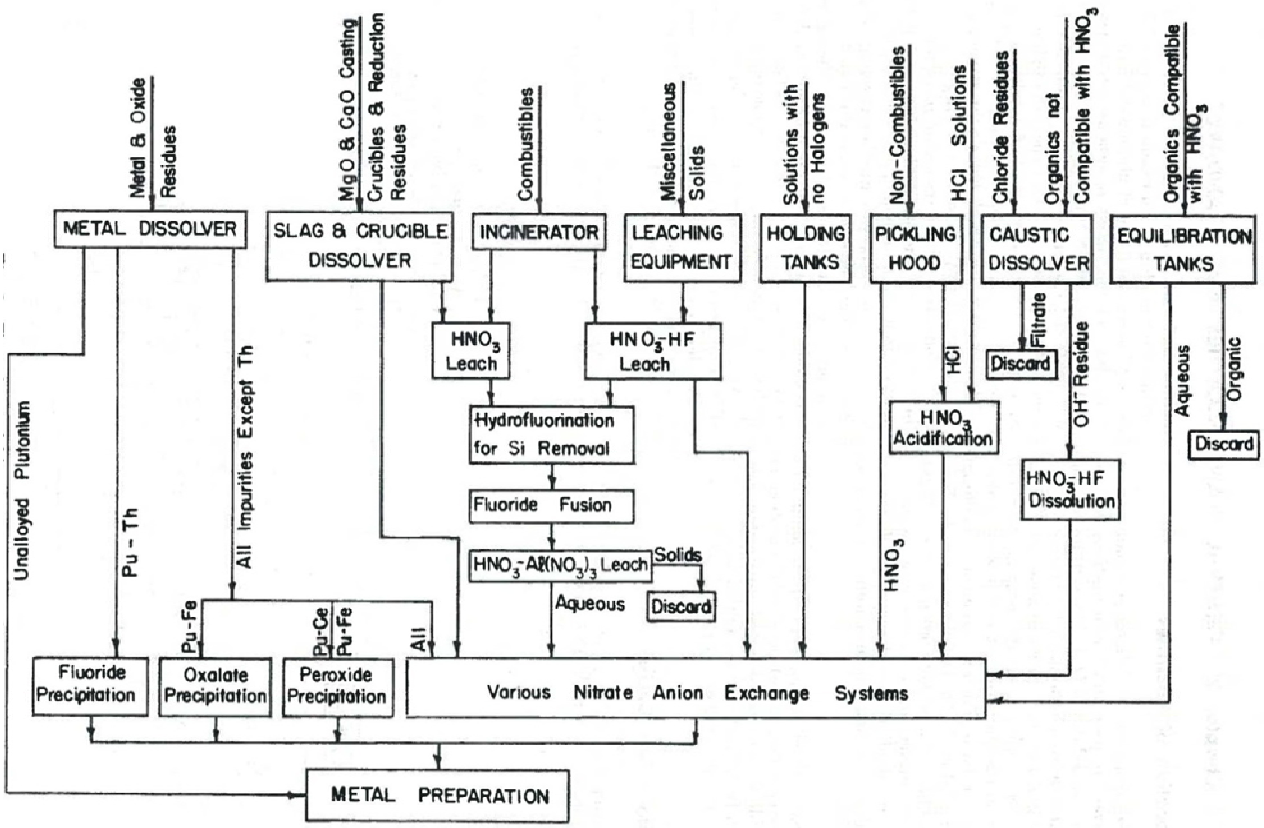

Figure 5 General material flow in the TA-21 plutonium recovery operations 1959 to 1978 (LASL 1969). These general processes were transferred to TA-55.

A review of potential transuranic (TRU) wastes from TA-21 process residues conducted in 1973 indicated that leached solids (Figure 5) were generated during the recovery operations but not from the nitrate anion exchange. Leaching consisted of dissolution, soaking, washing, or rinsing of ash or debris, also called pickling, in standard acidic solutions that consisted of hydrochloric, nitric and hydrofluoric acids, or mixtures of these acids. The discarded solids were carbonate, silica, or debris residues from incineration, dissolution or filtration processes. The combustible materials were almost entirely cheesecloth (LASL 1975). The leached solids were generally placed in 1-gal. stainless–steel cans for safe handling, but were not cemented (Criswell 2014a). The acid solutions were largely recycled to the anion exchange system for plutonium recovery. Spent acids were submitted to a TA-21 RLW facility (LASL 1975).

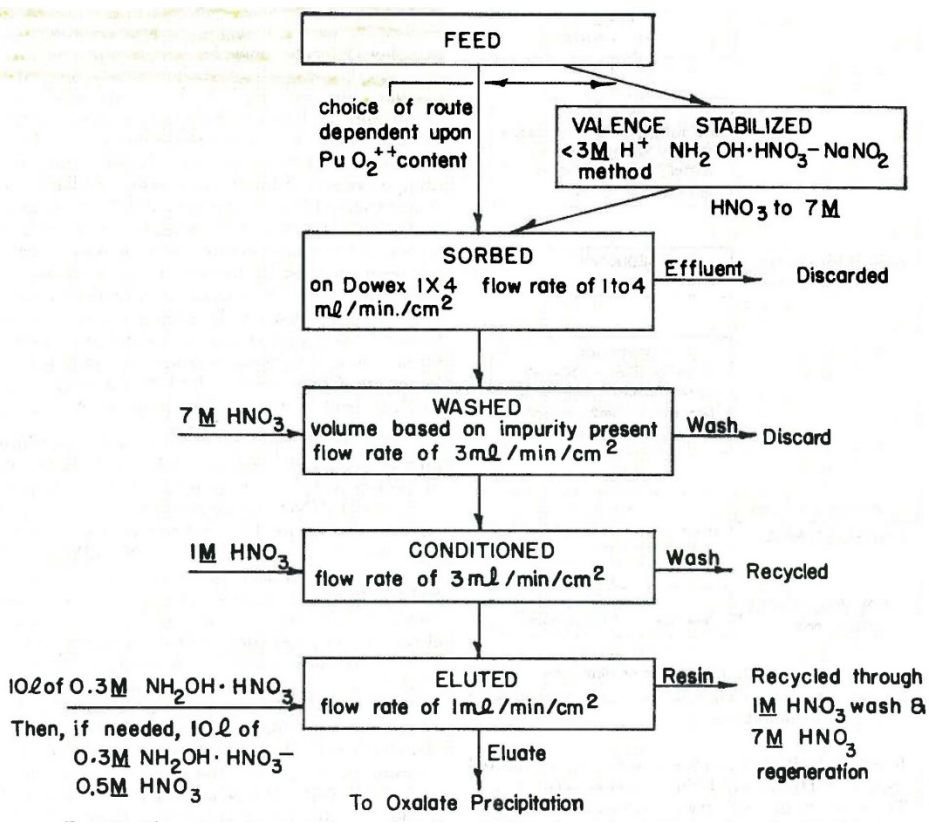

Figure 6 Material flow procedure for nitrate anion exchange purification of plutonium at TA-21 from 1959 to 1978 and generally continued at TA-55 (LASL 1969)

The discarded acidic americium wastes from the anion exchange units were termed americium raffinate, and these were processed by cementation in building 21-35. The americium raffinate wastes were transferred by tank trailer (Figure 3) from building 21-2 to 21-35. Other plant waste liquids were transferred through underground lines. The americium wastes also had radioactivity levels that were too high for the general plant area, so a small addition was constructed in September 1959. The first trailer load was delivered on November 16, 1959 (LASL 1965; LANL 1996). The procedure was to neutralize the acid waste with a 50% sodium hydroxide and mix it with Portland cement and vermiculite to produce a cement monolith in a 55-gal. drum. The cemented mixtures, variously termed mortar or cement paste, were tested for retention of radioactivity to determine the potential for leaching (LASL 1965). A single-drum tumbler was used to mix approximately 20 gal. of neutralized liquid waste in the drum with three (3) sacks of Portland cement and two (2) halves of a standard brick to enhance the mixing process. Some improvements were added: in 1960, cooling coils were added to the neutralization tank; in 1961, a double-drum tumbler replaced the single-drum unit and a 1,000-gal. americium storage tank was installed; and in 1964, a bulk cement silo was added to ease bag handling (LANL 1996).

Drums of cemented americium raffinate waste were allowed to set for about 24 h and were then sent for burial at MDA G. The process generated hundreds of 55-gal. drums a month. By 1961, the volume of americium raffinate waste averaged 1,311 gal./mo (LASL 1964). One hundred and thirty-four (134) drums were sent for burial in January 1962 (LASL 1962). Review of the MDA G Pit 2 laboratory notebook (No. 11363) for this period indicates at least this many drums were received. The notebook does not distinguish between drums of cemented wastes and drums of plant sludge. The total number of 55-gal. drums of cemented americium wastes created in 1962 was 1,566, and in 1963 it was 1,830 (LASL 1965).

In 1967, in conjunction with the construction of the new TA-21 waste processing facility, 21-257, a pilot scale pug mill, was installed in 21-35 to create design and operational criteria before final installation in 21-257. The pug mill consisted of a double-shaft open-top mixer capable of continuous feed of liquid at 6- to 9 gal./min. Typical pug mill runs were 7,000 L to 10,000 L. The experimental, cemented waste mixtures from 21-35 were reportedly pumped to 2-ft diameter by 20-ft deep pits in MDA T (LANL 1996). The location of these pits was not reported or discussed in an earlier document (LASL 1977) and is not known. The double-drum tumbler treatment of the americium wastes at 21-35 continued until the pug mill was installed and fully operational in 21-257 (LANL 1996).

Construction of building 21-257 was completed in June 1967. Some of the influent tanks and the cement silo were moved from 21-35 for cost savings. The new RLW facility included larger flash mixer, clarifier and flocculation tanks for processing of plant sludge, as well as new influent and batch holding tanks. The neutralized, americium raffinate solutions were blended with the plant sludge and Portland cement in the pug mill to create cement paste, and then pumped to 8-ft-diameter by 65-ft-deep receiving pits drilled at MDA T. The first pug mill run was conducted May 1968. Los Alamos Scientific Laboratory ([LASL] 1977) indicated that the earliest shaft (No. 19) was completed at a total depth of 65 ft with a concrete cap on September 5, 1968. It contains a reported 21,236 gal. of neutralized americium raffinate, plant sludge, strip waste (from uranium processing) as well as other batch wastes. From January to May 1973, liquid americium nitrate wastes averaged 2,500 gal./mo (see Attachment 3; LASL 1973). This volume is considered typical of the era. Disposal of cement paste from the pug mill continued until December 1975. From 1968 to 1975, hundreds of thousands of gallons of the cement paste were placed in sixty-two (62) 8-ft-diameter shafts, ranging from 30- to 65-ft deep, at MDA T at TA-21. Historical reports (LASL 1977; LANL 1996) provide various summaries of the cemented wastes placed in the MDA T shafts, the activities, and various isotopes. Not all of the MDA T shafts achieved the desired depth of 65 ft because a gravel layer inhibited drilling. MDA T is part of SWMU 21-016 and is a HC 2 nuclear facility (LANL 2013a).

In December 1975, the operations at 21-257 changed such that individual runs of the pug mill cement paste that exceeded established levels for TRU waste would be placed in retrievable storage. This required that retrievable TRU waste be placed into 30-in.-diameter by 20-ft-long continuously welded corrugated metal pipes (CMP), and the pipes placed into a retrievable storage configuration. A 12-in.-thick concrete plug was placed in each end of each pipe. The activities of the plant sludge were calculated so that americium raffinate waste could be blended in the pug mill to create TRU waste packages that would be placed in retrievable storage. When the activities of the plant sludge did not exceed established levels, the waste was not blended with the raffinate, and the cemented plant sludge pumped to other designated MDA T shafts. Records were compiled for each pug mill run to document the process (LANL 2013b). The last americium raffinate pug mill run was conducted July 1978 (LASL 1978). As part of the decommissioning of TA-21, the pug mill continued to process glovebox decontamination solution but not process wastes. The completed CMPs were placed in a vertical array pit at TA-21. From December 1975 to July 1978, one-hundred and fifty-eight (158) 30-in.-diameter by 20-ft-long CMPs were filled with the cement paste and placed in retrievable storage at TA-21, and transferred to Area G at TA-54 in 1986 (LANL 2013b).

The pug mill continued to process decontamination liquids from the TA-21 DP West decommissioning activities until 1983. The pug mill was dismantled and the components packaged and managed for waste disposition. Building 21-257 was deactivated in September 2011 (LASO 2011). All the utilities were disconnected, including electrical power, natural gas, fire protection water, telecommunications system, fire suppression and fire alarm systems. Approximately 80,000 gal. of wastewater was removed from the concrete influent tanks. The historical documentation indicated that approximately 9,200 gal. of radioactive wastes may remain as hold-up in the heels of the largely underground process tanks, with a total activity of about 0.24 Ci of alpha-emitting radionuclides (LANL 2006). The amount of residual

material in the americium raffinate holding tank on the west side of the building is not known. This tank was anecdotally noted to have been flushed with water, but this was not documented.

5.0 TA-55 1978–1991

In July 1978, the plutonium recovery group moved from TA-21 (LANL 1982) to new facilities at TA-55 to increase the safety and efficiency of operations. No plutonium purification or recovery equipment was transferred, although some accountable materials were transferred. At the new TA-55 facility, the well-established anion-exchange processes (Figure 5) were upgraded with new equipment. The plutonium purification process included the wash of the anion exchange column with 7-M nitric acid to remove the impurities, including magnesium, calcium, iron, aluminum, chromium, sodium, potassium, and americium, was continued. The nitric acid wash solutions, then referred to as plutonium-poor solutions, were not simply discarded. These solutions, as well as other general maintenance solutions, such as mop or vacuum water, decontamination fluids, or very dilute processing solutions, were directed to the new evaporators that were designed to significantly reduce the volume of waste liquids produced at TA-21.

The plutonium-poor solutions were collected and stored in batches up to 600 L. They were then concentrated in the evaporator to approximately 25-L volumes called “bottoms.” The evaporator bottoms were then transferred to a chilling tray and sampled to determine if they met the discard limit (DL). If they were above the DL, they were directed back to the anion exchange units. If they were below the DL, they were filtered. The nitrate salts captured in the filter were a loose, moist-to-saturated yellowish solid that varied in weight from a few pounds to several tens of pounds each. The evaporator runs produced bottoms and salts of various isotopic compositions because the feedstock varied (e.g., anion exchange wash, decontamination water, etc.). The nitrate salts were then bagged and sent to either packaging or to cement fixation. The filtrate solutions were then sampled again to meet the DL and subjected to a hydroxide precipitation process. The pH of the solution was raised to approximately 13, and the solution was again filtered. The hydroxide precipitation salts captured in the filter were then dried to produce a hard brownish cake. These cakes were also bagged and sent to either packaging or to cement fixation. The filtrate and distillate solutions from the evaporator operations were transferred to the TA-50 RLW facility where they were introduced into the main treatment operations or pretreatment tanks before processing. The TA-50 RLW operations are described in a Laboratory report (LANL 1996) and a Central Characterization Project summary report (CCP 2013).

The cement fixation operations at the start-up of TA-55 were intended to capture the nitrate salts and the hydroxide cakes generated by the evaporators. In practice however, the cement fixation process could not keep pace with the production of evaporator bottoms. As such, most nitrate salts and some hydroxide cakes that met the DL were cemented in 1-gal. stainless-steel cans with slip-fit lids, but some unconsolidated salts were packaged in bags. The empty cans were prepared with dry Portland cement and introduced into the process glovebox. Bags of nitrate salts or hydroxide cake were poured into the prepared cans, industrial make-up water was added, the pH was adjusted to allow the cement to set properly, and the solution was hand mixed with a stir paddle. Individual bags of nitrate salt could produce from a few to over twenty (20) cemented cans, depending on weight. The individual cement/water/waste mixtures depended on the operator experience (Criswell 2014b). In the 1980s, equipment improvements, such as powered mixers, facilitated increased productivity and increased production of cemented cans over bags of unconsolidated salts. Gypsum cement was tried in the mid-1980s because it did not require the steep pH increase that Portland cement did, but the gypsum tended to dewater after fixing.

The bags of unconsolidated salts were bagged out of the operational glovebox and packaged in 55-gal. drums with polyethylene and lead liners. Drums would contain anywhere from a few to over a dozen bags of salts. Cemented cans were wrapped with vinyl tape and individually numbered prior to bag out of the

glovebox. Drums of cemented cans could contain up to thirty-five (35) cans in an array of five (5) layers of seven (7) drums per layer, but polyethelene liners were not required. Bags and cans were not mixed in the waste drums. Other debris, such as leaded gloves, filters, glass or metal items were not routinely packaged with either bags or cemented cans.

6.0 TA-55 1991 TO PRESENT

In 1988, the plutonium recovery group began the replacement of the evaporator and cement fixation equipment. By 1991, the new evaporator and cement fixation equipment were fully tested and operational. This completely eliminated production of unconsolidated nitrate salts and largely eliminated 1-gal. cans, although the latter could be produced for one-off processes. The equipment was plumbed so the evaporator bottoms could be piped directly to the cementation equipment. Cementation was performed directly in a polyethylene-lined 55-gal. drum. If it met the DL, the entire evaporator bottom was cemented after pH adjustment. Up to three (3) volumes of liquid evaporator bottom, approximately 25 L each, could be mixed in each drum, depending on isotopic composition. Portland cement and industrial make-up water were added to the waste in the drum, as required. The repetitive processes of filtration and precipitation of the solid salts from the evaporator bottoms, were also eliminated. In 2006, the evaporator distillates, formerly sent to the TA-50 RLW, were used for make-up water (Ramsey 2014b). Thus, the total volume of waste from the plutonium recovery operations was reduced.

7.0 REVIEW OF POTENTIAL NITRATE SALT CONTAINERS STORED AT THE LABORATORY

The Laboratory generally started the process of retrievable storage of TRU wastes at Pit 9 at MDA G at TA-54 in November 1974 (LANL 2013c). Over 4,000 containers, including drums and fiber-glass reinforced plywood (FRP) boxes, were placed underground in Pit 9 until November 1979. Over 60% of the containers were from the TA-21 plutonium processing facility. Less than 15% of the waste containers were from TA-55, which had started plutonium operations in late 1978 and 1979. All containers placed in Pit 9 remain at this writing (LANL 2013c). In May 1979, the Laboratory began retrievable storage of TRU waste containers in above ground, earthen-covered, asphalt pads. TRU wastes that required retrievable storage were placed in both Pit 9 and Pad 1 in the last months of 1979. Pad 1 was used until December 1981, two (2) other pads were constructed and received waste containers until 1991 (LANL 2002). All of the TRU containers stored in the earthen-covered pads were retrieved by December 2001 and placed in inspectable storage configurations (LANL 2002).

The population of unconsolidated nitrate salt containers in storage at TA-54 Area G was evaluated by the LANL TRU Waste Program (LANL 2014). This evaluation utilized Laboratory generator Waste Codes A25, A26, A27, and A28 (Attachment 4). The dates of interest were from 1979 to 1991 because these dates spanned the period between the start-up of TA-55 nitrate evaporator operations in 1979 and full implementation of the new evaporator and cement fixation operations in 1991. Over 1,880 active, containers were finally evaluated for the presence of unconsolidated nitrate salt in bags with attached generator Waste Codes of A25, A26, and A27. This evaluation identified two hundred and sixty-seven (267) original containers of unconsolidated nitrate salts stored aboveground at Area G. Containers were assigned a *Salt Type of Nitrate, Suspect or Miscellaneous,* based on the generator records. As of March 2014, six hundred and seventy-two (672) containers had been created as a result of nitrate salt container remediation processes, including waste sorting, neutralization, absorption of liquids, and re-packaging. Thirty-five (35) of the two hundred and sixty-seven (267) original containers had not been remediated. Twenty-nine (29) original suspect nitrate drums were identified that remained in aboveground storage at the Laboratory (LANL 2014).

Containers of nitrate or suspected nitrate salts stored belowgrade at TA-54 Area G were generally not included in the nitrate salt evaluation report (LANL 2014). A review for this report of containers stored belowgrade with potential Waste Codes A25, A26, or A27 (Attachment 4) indicates that only Waste Code A25 (Leached Solids) is attached to these containers. Table 2 summarizes the number of containers and their assigned waste streams. All are in Pit 9 (LANL 2013c). The sixty-four (64) containers with *cemented*, *miscellaneous,* or *nitrate* salt types assigned were part of the nitrate salt evaluation, because they were generated at TA-55 and had documentation as such (LANL 2014). Twelve (12) containers stored belowgrade in Pit 9 are identified with unconsolidated nitrate salts as of June 2014. Details of the containers at Pit 9 are presented in Attachment 2 to this report. The waste stream assignment is considered preliminary because additional information is required (e.g., radiography) to determine if the wastes are unconsolidated salts in bags or are cemented wastes in cans. The gross weights of the drums are consistent with unconsolidated salts in bags.

Table 2
Summary of Belowgrade Containers
in Pit 9 with Waste Code A25 (Leached Solids)

Waste Code A25	Count of Containers
Waste Stream/Salt Type	**445**
LA-CIN01.001-Cans	**64**
Cemented	10
Miscellaneous	42
Nitrate	12
TA-21 Homogeneous	**381**
Miscellaneous	1
NA	380
Total	**445**

Three hundred and eighty-one (381) TA-21 containers stored in Pit 9 are currently considered to have salt type assignments of *Not Applicable* (NA) by default but are probably a type of non-nitrate salt waste (Table 2). The assigned Waste Code A25 indicates the wastes are TA-21 homogeneous solids (leached solids, or leached process residues), but there is little specific process information. Laboratory documents provided general process descriptions for plutonium purification and recovery, such as leaching of combustible and noncombustible residues (LANL 1969), and TA-21 process glovebox operations (LASL 1975). Waste generator records indicate that the containers were created in the early- to mid-1970s, and the majority as “off-site Hanford process solids.” The latter refers to recovery of plutonium-239 from debris wastes sent to the Laboratory from Hanford (LASL 1975), some of which represented clean-up debris after an explosion in a Hanford glovebox (Battelle 1976). The single largest contributor to the category of process solids was incinerator ash (LASL 1975). All the TA-21 leached solids are likely to be oxide, hydroxide, carbonate, or silica-rich debris residues because no process for generating dried nitrate solutions is known to have existed at TA-21. It is believed that waste codes were revised as necessary, and that waste code A27 (nitrate salt) was not created until the evaporator operations start-up at TA-55, but no documentation was found as part of this report to corroborate this assumption.

Other containers identified as TA-21 homogeneous solids have waste codes (Attachment 4) assigned that represented mixed combustible waste (A14) or mixed cellulosic materials (A15). Containers generated after the 1976 Hanford incident may contain a wide variety of debris in which little recovery

was attempted (Criswell, 2014a). Descriptions of the TA-21 solid wastes by waste category, metals, plastic, glass, and process solids (Attachment 5) were provided by LASL (1975), but the (Hanford) drum numbers recorded on the generator forms cannot be reconciled. The authors of a Laboratory document (LANL 1986) considered that A25 process residues could potentially require processing to remove free liquids, whereas, A15 process waste and other debris wastes could be certified for disposal at the Waste Isolation Project Plant without repackaging because they were considered to be dry. One of the authors, A.E. Dross, had been a waste generator at TA-21. Salt type assignments are not applicable to debris wastes, such as combustible, incombustible, or mixed cellulosic debris materials.

8.0 CONCLUSIONS AND DISCUSSIONS

The creation and management of waste solutions from plutonium recovery operations has been the focus of many engineered changes at TA-21 and TA-55. These waste solutions typically have high concentrations of impurities, including americium and metals, such as magnesium, calcium, iron, and aluminum, among others. In the 1940s, purification and recovery processes relied on simple aqueous chemistry and the low solubility of plutonium hydroxide. Recovery residues from plutonium operations from which no further recovery was then possible were sent to the General's Tanks for storage. By the mid-1970s, the solutions had naturally precipitated a layer of solids in the bottoms of the tanks and a large layer of supernatant liquid. The supernatant liquid was pumped from the tanks, but the unconsolidated sediment layer remains to this day at the two tanks at MDA A at TA-21. The chemical composition of these solids is similar to nitrate salts generated by later processes, but the americium content is low because of the parent material. The results of sampling and analysis in 2011 indicate the tanks may contain over 3,000 g of plutonium in saturated solutions with high nitrate concentrations. The sediment residues in the General's Tanks remain the largest volume of plutonium-contaminated unconsolidated nitrate waste at the Laboratory.

Plutonium purification and recovery at TA-21 in the 1950s relied largely on solvent exchange in packed columns. The waste liquids were processed by physical/chemical precipitation of metals and radionuclides using iron sulfate and chlorides salts. The processed plant sludge waste was sent for burial at MDA C at TA-50. In 1959 a major change was made to nitrate anion exchange processes, and hundreds of gallons a month of liquid residues were generated. These americium raffinate solutions were treated by cement fixation, one or two drums at a time, and sent for burial at MDA G at TA-54. In the 5-yr period from 1959 to 1964 over 6,000 drums of cemented nitrate wastes were buried at MDA G (LASL 1965). A larger waste process facility, 21-257, was constructed at TA-21 in 1968, and larger waste disposal options were required. The liquid americium nitrate waste was mixed in a pug mill with plant sludge and Portland cement to form a cement paste. From 1968 to 1975, hundreds of thousands of gallons of the cement paste were placed in sixty-two (62) shafts at MDA T at TA-21. From December 1975 to July 1978, one-hundred and fifty-eight (158) CMPs, filled with the cement paste, were placed in retrievable storage at TA-21, and moved to TA-54 in 1986. No containers with unconsolidated nitrate salt are known to have been generated at TA-21.

When the TA-55 plutonium facility replaced TA-21 in 1978, the effort was to increase safety and efficiency of operations and decrease the volume of cemented americium nitrate paste. Thus, liquid evaporators and cement fixation in relatively small gloveboxes was initiated. In practice, however, the cement fixation process could not keep pace with the production of evaporator bottoms. From 1979 to 1991, unconsolidated nitrate salts in bags were generated concurrently with cemented salts in 1-gal. stainless-steel cans. The change to monolithic cementation processes in 1991 completely eliminated the generation of unconsolidated nitrate salts. Process descriptions (LANL 2008 and CCP 2014) of the historic unconsolidated, nitrate and hydroxide salt waste generation operations are incomplete.

No additional nitrate salt containers are identified in the aboveground storage population beyond those identified in May 2014. This review identifies twelve (12) containers of potentially unconsolidated nitrate salts stored belowgrade in Pit 9 at Area G, TA-54. These few containers were generated during start-up of TA-55 that coincided with the waning use of belowgrade storage. No processes are recognized that generated nitrate salts at TA-21 because all nitrate waste solutions were reportedly returned to the anion exchange operations or cemented in various bulk forms at TA-21 RLW facilities. Homogeneous solid wastes from TA-21 stored largely belowgrade assigned Waste Code A25, Leached Solids or Leached Process Residue are assumed to be oxide, hydroxide, or debris waste, based on process information.

Based on this review of nitrate salt waste, it is recommended that (1) salt type assignments are relevant to the belowgrade TRU waste containers with leached solids; and (2) they be assigned to *Salt Type Miscellaneous* because they were probably hydroxide, oxide, or other residues, were not generated by the concentration of nitrate acid residues, and were probably not cemented. They may have been packaged in taped, slip-lid cans for safe handling, and then drummed. The nitrate salt evaluation (LANL 2012) was based on review of generator records and waste codes assigned to waste items from the TA-55 waste generators. No item-numbered waste generator records are known for TA-21 operations that would provide additional information.

9.0 REFERENCES

Battelle 1976. “Explosion of Cation Exchange Column in Americium Recovery Service, Hanford Plant, August 30, 1976,” Pacific Northwest Laboratory report BNWI-1006, October 8,1976, Battelle-Northwest, Richland, Washington.

CCP 2013. “CCP AK Summary Report for LANL TA-50 Mixed Transuranic Waste, Waste Streams, LA-MIN03-NC.001, LA-CIN02.001, and LA-MHD09-001,” Central Characterization Project report CCP-AK-LANL-004, Rev. 11, March, 2013, M. Ramirez, Washington TRU Solutions, Carlsbad, New Mexico.

CCP 2014. “CCP AK Summary Report for LANL TA-55 Mixed Transuranic Waste, Waste Streams LA-MHD01-001, LA-CIN01.001, LA-MIN02-V.001, and LA-MIN04-S.001,” Central Characterization Project report CCP-AK-LANL-006, Rev. 13, February, 2014, L. Porter, Washington TRU Solutions, Carlsbad, New Mexico.

Criswell 2014a. “Leached Solids from Building 21-2 at DP West,” Los Alamos National Laboratory, personal communication with T. C. Short, former Technical Staff Member for plutonium recovery at DP West, June 5, 2014, Los Alamos, New Mexico.

Criswell 2014b. “Process for Cement Fixation Start-Up at TA-55,” Los Alamos National Laboratory, personal communication with C. A. Smith, lead technician for former cement fixation operations at TA-55, June 11, 2014, Los Alamos, New Mexico.

Criswell 2014c. “Analysis of Metal Scrapings from Inside the General’s Tanks 2010,” Los Alamos National Laboratory, personal communication with R.C. Roback, Technical Staff Member and Prinicipal Investigator, June 11, 2014, Los Alamos, New Mexico.

LANL 1982. “Los Alamos DP West Plutonium Facility Decontamination Project 1978-1981,” Los Alamos National Laboratory report LA-9513-MS, R. Garde, E.J. Cox and A.M. Valentine, September 1982, Los Alamos, New Mexico.

LANL 1986. “Final TRU Waste Inventory Work-Off Plan,” Los Alamos National Laboratory report LA-UR-862932, J.L. Warren and A.E. Dross, December 15,1986, Los Alamos, New Mexico.

LANL 1996. “A History of Liquid Waste Management at Los Alamos,” Los Alamos National Laboratory report LA-UR-96-1283, L.A. Emelity, Los Alamos, New Mexico.

LANL 2002. “Transuranic Waste Inspectable Project (TWISP) Final Report,” Los Alamos National Laboratory report LA-13980-MS, G.M. Montoya, September, 2002, Los Alamos, New Mexico.

LANL 2006. “ML Determination for the De-Inventory of TA-21-257 and Preparations for D&D,” Los Alamos National Laboratory design report TSW-06-01, August 14, 2006, Los Alamos, New Mexico.

LANL 2008. “Process Acceptable Knowledge Report for Nitrate Operations at TA-55,” Los Alamos National Laboratory report TA55-RPT-004,R0, K.Goyal, August 25, 2008, Los Alamos, New Mexico.

LANL 2011a. “General’s Tanks, As–Found Drawings,” Los Alamos National Laboratory, Utilities and Infrastructure, Drawing No. ENG C-55705, Los Alamos, New Mexico.

LANL 2011b. “Characterization of Sludge and Water Samples Obtained from the General’s Tanks during April 2010 Sampling,” Los Alamos National Laboratory report LA-UR-11-06876, R. Roback, H. Boukhalfa, K. Spencer, A. I. Abdel-Fattah, S.D. Ware, P Archer, N. Xu, M. Schappert, and E. Gonzales, Los Alamos, New Mexico.

LANL 2013a. “Documented Safety Analysis for the Nuclear Environmental Sites (NES) at the Los Alamos National Laboratory,” Los Alamos National Laboratory report NES-ABD-0101, Rev.6.0, Los Alamos, New Mexico.

LANL 2013b. “Corrugated Metal Pipes Category of Transuranic Waste Stored Below Ground within Area G,” Los Alamos National Laboratory report LA-UR-13-26921, K.M. Hargis, August 28, 2013, Los Alamos, New Mexico.

LANL 2013c. “Pit 9 Category of Transuranic Waste Stored Below Ground within Area G,” Los Alamos National Laboratory report LA-UR-14-20119, K.M. Hargis, December 19, 2013, Los Alamos, New Mexico.

LANL 2014. “Summary of Evaluation and Identification of LANL Nitrate Salt Containers,” Los Alamos National Laboratory report LA-UR-14-23807, May 29, 2014, Los Alamos, New Mexico.

LASL 1947. “Chemistry of Uranium and Plutonium, Volume 8, Chapters 5 and 6,” Los Alamos Scientific Laboratory report LA-1017, June 27, 1947, Los Alamos, New Mexico.

LASL 1962. “Summary of Waste Discarded to Hot Dump, January 1962,” Los Alamos Scientific Laboratory memorandum from C.W. Christensen to D. Meyer, February 12, 1962, Los Alamos, New Mexico.

LASL 1964. “New Treatment Facility at DP West to Replace Building 35,” Los Alamos Scientific Laboratory memorandum from E.B. Fowler to T.L. Shipman, March 24, 1964, Los Alamos, New Mexico.

LASL 1965. “Disposal of Am-241 and Pu-239 Raffinate Solutions by Fixation with Cement,” Los Alamos Scientific Laboratory report LA-3150-MS, L.A. Emelity, C.W. Christensen and E.B. Fowler, March 12, 1965, Los Alamos, New Mexico.

LASL 1969. “Plutonium Processing at the Los Alamos Scientific Laboratory,” Los Alamos Scientific Laboratory report LA-3542, E.L. Christensen and W.J. Maraman, April 1969, Los Alamos, New Mexico.

LASL 1973. “Radioactive Wastes to DP-257 January through May 1973,” Los Alamos Scientific Laboratory memorándum, no author noted, ER ID record No. 935, Los Alamos, New Mexico.

LASL 1975. “Characterization of Transuranic Solid Wastes from a Plutonium Processing Facility,” Los Alamos Scientific Laboratory report LA-5993, R. Mulkin, June 1975, Los Alamos, New Mexico.

LASL 1977. “History and Environmental Setting of LASL Near-Surface Land Disposal Facilities for Radioactive Wastes (Areas A, B, C, D, E, F, G and T),” Los Alamos Scientific Laboratory report LA-6848-MS, M. A Rogers, June 1977, Los Alamos, New Mexico.

LASL 1978. “Area Health Physics, Monthly report,” Los Alamos Scientific Laboratory, July 1978, Los Alamos, New Mexico.

LASO 2011. “Approval of Change Request for Permanent Equivalency to DOE Order 420.1B, DOE Requirements to Disable Automatic Sprinkler and Fire Alarm Systems within Los Alamos National Laboratory Building TA-21-257,” letter from K.W. Smith to S.K. Shook, August 19, 2011, U.S. Department of Energy, Los Alamos Site Office.

Ramsey 2014a. “Experimental Evaporator in Building 21-2 at DP West,” Los Alamos National Laboratory, personal communication with A. E. Nixon, former technician for plutonium recovery at DP West, May 15, 2014, Los Alamos, New Mexico.

Ramsey 2014b. “Incorporation of Evaporator Distillate into Cement Fixation Operations,” Los Alamos National Laboratory, personal communication with R. Chavez, former lead technician for cement fixation operations at TA-55, June 11, 2014, Los Alamos, New Mexico.

Attachment 1
Photographs of Waste Liquid in tank and Access Covers,
General's Tanks, Material Disposal Area A, Technical Area 21

Photograph of interior of west tank (21-107) taken in 2009 after initial entry and before liquid and sediment samples were collected. The string was a remnant from historical sampling events.

Photograph of installation of inner, shoring box on the top of the mild-steel storage tank. The top of the west tank (21-107) and opening are visible.

Photograph of new inner access plate on top of concrete slab, east tank (21-108). The stainless cap can be removed for access to the tank. The steel cover at ground level was removed during access.

Photograph of top of caisson and fabricated steel cover at ground level. View to north of west tank (21-107).

Attachment 2
Unconsolidated Nitrate Salts in Belowgrade Containers
Stored at Pit 9, Material Disposal Area G, Technical Area 54

Summary of Nitrate Salt Drums Stored Belowgrade at Area G

Container ID	Salt Type	Waste Stream	Current Location	TRU Package Description	PE-Ci	Fissile gram Equivalent	Dose (mRem/h)	Gross Weight
S791752	Nitrate	LA-CIN01.001-Cans	Pit 9	55-gal. steel drum	1.2	11.1	1	433
S791925	Nitrate	LA-CIN01.001-Cans	Pit 9	55-gal. steel drum	4.3	29.7	2	361
S791927	Nitrate	LA-CIN01.001-Cans	Pit 9	55-gal. steel drum	0.8	5.6	1	373
S791948	Nitrate	LA-CIN01.001-Cans	Pit 9	55-gal. steel drum	0.4	3.5	1	410
S791950	Nitrate	LA-CIN01.001-Cans	Pit 9	55-gal. steel drum	0.5	3.8	1	448
S793110	Nitrate	LA-CIN01.001-Cans	Pit 9	55-gal. steel drum	1.6	12.8	1	381
S793143	Nitrate	LA-CIN01.001-Cans	Pit 9	55-gal. steel drum	2.3	15.8	2	423
S793194	Nitrate	LA-CIN01.001-Cans	Pit 9	55-gal. steel drum	1.1	9.1	2	358
S793196	Nitrate	LA-CIN01.001-Cans	Pit 9	55-gal. steel drum	66.1	146.2	15	317
S793219	Nitrate	LA-CIN01.001-Cans	Pit 9	55-gal. steel drum	2.7	18.8	3	328
S793292	Nitrate	LA-CIN01.001-Cans	Pit 9	55-gal. steel drum	2.1	14.8	5	393
S793707	Nitrate	LA-CIN01.001-Cans	Pit 9	55-gal. steel drum	0.7	4.9	1	386

Attachment 3
Excerpt from Los Alamos Scientific Laboratory Memorandum "Radioactive Wastes to DP-257 January through May 1973," no author noted, ER ID record No. 935

TR4499

RADIOACTIVE WASTES TO DP-257

January through May 1973

	Type of Wastes	Av Vol/Mo Gallons	Chemical Composition	Radioactivity Av/Mo
1	Main flow stream, DPW	129,300	pH 11.4; TS-1,580 mg/l; Na-400 mg/l; NO_3-73 mg/l; Cl-57 mg/l	1.38×10^{-1} μCi/l gross α 1.32×10^{-3} μ Ci/l Sr
2	Main flow stream, DPE	13,700	Incl. above	Incl. above Low ^{235}U
3	Am-Pu acid wastes	2,500	HNO_3 + metals	22.15g ^{239}Pu 20.04g ^{241}Am ~0.01g ^{238}Pu
4	Bldg 2 NaOH wastes	400	(from recovery oper.) NaOH, Fe, Cl, NO_3 + various others	188 mg total α -incl. ^{239}Pu, ^{241}Am
4	Bldg 4 KOH	130	KOH, used to scrub HF lines	246 mg ^{235}U + 2 mg ^{239}Pu + Trace ^{238}Pu
4	Bldg 5 KOH wastes	480	(scrubbing sol.) KOH, F^-	1.36g ^{239}Pu
1	Distillate	1,130	$-NO_3$	11.4g ^{235}U (Incl. in main stream)
4	Scrub tank Distillate	40	NO_3^-, Cl^- Neut. KOH + misc. organics	800 mg ^{235}U
6	Alcohol	8	Ethyl Alcohol	1.78g ^{239}Pu
5	Strip wastes	255	Na, Mg, Al, Fe, Cr, Ni, NH_3, SO_4, NO_3	15.2g ^{235}U Trace amounts of ^{90}Sr & ^{137}Cs (MFP)
7	Organics, solvents	9	Acetone, Chlorethylene, etc.	^{235}U, ^{238}Pu, ^{239}Pu
8	Oils	8	Vacuum pump oil	^{238}Pu, ^{239}Pu

Received by ER-RPF
MAY 0 4 1992
NSM

Attachment 4
Excerpted Table of LANL Waste Codes from "Final TRU Waste Inventory Work-Off Plan,"
Los Alamos National Laboratory Report LA UR 862932, J.L. Warren and A.E. Dross,
Revised December 15,1986, Los Alamos, New Mexico

Los Alamos National Laboratory
Waste Management Group HSE-7
VALID WASTE CODES

CODE	WASTE MATERIAL DESCRIPTION
A-10	Graphite
A-14	Combustible Room Decon. Waste
A-15	Mixed Cellulosics
A-16	Plastic Materials
A-17	Rubber Materials
A-18	Mixed Paper, Plastic, Rubber, etc.
A-19	Mixed Combustible/Noncombustible Trash
A-20	Hydrocarbon Oils
A-21	Silicon Base Oils
A-25	Leached Process Residues
A-26	Evaporator Bottoms (Salts)
A-27	Nitrate Salts
A-28	Chloride Salts
A-29	Hydroxide Cake
A-30	PN Equipment
A-31	Non-PN Equipment
A-32	PN Size Reduced Equipment (SRF Only)
A-33	Non-PN Size Reduced Equipment (SRF Only)
A-35	Combustible Building Debris
A-36	Noncombustible Building Debris
A-40	Combustible Hot-Cell Waste
A-41	Noncombustible Hot-Cell Waste
A-45	Uranium Chips and/or Turnings
A-46	Skull and Oxide
A-47	Slag and Porcelain Crucibles

CODE	WASTE MATERIAL DESCRIPTION
A-50	Metal Crucibles, Scrap, Dies
A-51	Precious Metals
A-52	Other Scrap Metals
A-55	Filter Media
A-56	Filter Media Residue
A-60	Other Combustibles
A-61	Other Noncombustibles
A-65	Animal Tissue
A-68	Asbestos Only
A-69	Asbestos Contaminated Debris
A-70	Chemical Waste
A-71	Be
A-72	Hg
A-73	Counting Vials and Solution
A-74	Ion Exchange Resin
A-75	Chemical Treatment Sludge
A-76	Cement Paste
A-77	Vermiculite
A-80	Sources
A-85	Firing Point Residues
A-90	Contaminated Soil
A-95	Glass
A-99	Unidentified Material (TA-54 personnel use only)

(12/85)

FIGURE 2. Valid Los Alamos Waste Codes

Attachment 5
Excerpted Appendices A and B from "Characterization of Transuranic Solid Wastes from a Plutonium Processing Facility," Los Alamos Scientific Laboratory report LA-5993, R. Mulkin, June 1975, Los Alamos, New Mexico.

APPENDIX A

RESIDUES GENERATED BY PLUTONIUM METAL FABRICATION

1. Non-Pu Scrap Metal
   Aluminum foil, tin cans, used scrap pipe (stainless steel, mild steel, and aluminum), small obsolete equipment, etc.
2. Plastic
   Primarily polyvinyl chloride (PVC) from bag-in and bag-out operations, and some polyethylene and polypropylene.
3. Rubber
   Mostly drybox gloves.
4. Combustibles
   Almost totally cheesecloth.
5. Glass
   Broken laboratory-type equipment such as beakers, graduated cylinders, and Vycor castings sleeves.
6. Ceramics
   Magnesium oxide liners and other refractories.
7. Insulation
   Transite board, asbestos pipe insulation.
8. Graphite
   Primarily molds and crucibles from casting operations.

APPENDIX B

DESCRIPTION OF RETRIEVABLE WASTE BY MATERIAL TYPE

1. Cellulosics

All of the cheesecloth used in glovebox operations for cleanup work is reused as long as possible before it is transferred to recovery. In many cases, the cheesecloth has been exposed to nitric acid or oil. This material is quite high in plutonium concentration and is routinely counted and transferred to the incinerator. For this reason, none of the process-generated cellulosics were in the retrievable waste category. Cheesecloth used outside the gloveboxes during maintenance work and cleanup operations contribute a significant portion of the less than 0.05-g/kg stream. Wood filter frames of HEPA glovebox primary filters contribute heavily to the 0.4-g/kg stream.

2. Plastic

Retrievable plastic wastes consist primarily of PVC bags and bag stubs. Some sheet material used as temporary floor covering, and laboratory wares such as funnels, petri dishes, graduated cylinders, wash bottles, tubing, and gaskets also appear in this waste stream. If PVC bags are handled with any degree of care, contamination can be held to less than 0.1 g/kg.

3. Process Solids

Incinerator ash, after being leached with nitric acid and calcium fluoride, is the main solid residue from scrap recovery operations. Any other solid material collected from glovebox cleaning is also leached in the same fashion. Other terms used on a local basis include sweepings, heels, ash heels, and leached residues. Present discard limit for this material based on the economics of recovery is 4 g/kg.

4. Metal

Retrievable metal wastes are represented by a diverse stream of nails, nuts, bolts, wiring, conduit, tin cans, stainless steel dressing jars, aluminum foil, lathe turnings, hacksaw blades, screw drivers, tweezers, hammers, hair dryers, hot plates, heating coils, vacuum cleaners, and furnaces. In this study most of the tin cans in which off-site ash had been received from the Central Scrap Management Office at Richland were less than 0.1 g/kg. The contamination present on tools and small equipment can vary greatly depending on usage, time in the glovebox, and cleaning effort.

5. Glass and Ceramic

Retrievable glass and ceramic materials primarily include normal laboratory glassware such as beakers, cylinders, graduated cylinders, and 1-ℓ to 9-ℓ bottles. Heating mantles used in batch leaching operations are occasionally discarded, but are normally reduced to a small residue by volatilizing the silicon in a hydrofluorination treatment.

6. Rubber

In this study, almost all of the stream was glovebox gloves. When a box of room trash was found to be over 10 nCi/g, and the waste was merged with the process generated waste, some surgeon's gloves would contribute to this waste. Occasionally items such as rubber stoppers and tubing would appear.

Attachment D

Generator Documentation for 35 Unremediated Nitrate Salt-Bearing Waste Containers

29 UNREMEDIATED NITRATE SALT DRUMS – 27 With Discardable Waste Logs
S793724
S801676
S802701
S802739
S802833
S803078
S804948
S804995
S805051
S805289
S813385
S813389
S813545
S816434
S816810
S818435
S822599
S822713
S822844
S823124
S823184
S825878
S825879
S851415
S853714
S862888
S864213
2 With TWSR Only
S842446
S844602
6 UNREMEDIATED NITRATE SALTS DRUMS SHIPPED DIRECTLY OFF-SITE– With Discardable Waste Logs
S794448
S802853
S816357
S823125
S823126
S835376

S793724

Radioactive Solid Waste Disposal Record DrumID: ~~5076~~ 005076

12-Jul-95 RSWD: ~~3724~~ 5793724

Old RSWD:

Date Sealed: 11/6/79

Origin of Waste

Group: CMB11

TA: 55

Building: PF-4

Room: 432

Program Code:

Waste Code: A25

Waste Desc:

Gross Weight : 165.5 kg

Additional Description:

Initials: CG

Entry Date: 6/12/95

re-entered 8-6-98

Discardable Waste Log Sheet

DrumID: 5076

Item#	ItemID	Net (kg)	Matrix	M Code	NM	MT	Auth	Remarks
1	IXFS-58-R1	3.25	54		0	54	5/11	
2	IXFS-89-F1	6.8	54		0	54	5/11	
3	IXFS-90-F1	13.3	54		0	54	5/11	
4	IXFS-91-F1	8.18	54		0	54	5/11	
5	IXFS-58-R1A	4.3	54		9.7	54	5/11	
6	IXFS-92-F1	7.7	54		0.72	54	5/11	
7	IXFS-93-F1	25	54		0	54	5/11	
8	IXFS-94-F1	8.4	54		0	54	5/11	
9	IXFS-95-F1	6.3	54		0	54	5/11	
10	IXFS-96-F1	3.18	54		0.133	54	5/11	
11	IXFS-97-F1	2.27	52		0	52	5/11	
		88.68 kg						

PLEASE READ INSTRUCTIONS ON BACK CAREFULLY

H-7 Waste Management
Ext 6095

LASL RADIOACTIVE SOLID WASTE DISPOSAL RECORD FORM

1. FORM NUMBER	2. DATE (M M D D Y Y)	3. RETRIEVABLE SERIAL NO.	4. ORIGIN OF WASTE: GROUP	TA	BLDG.	WING	ROOM	5. WASTE CODE
S 7 9 [illegible]	1 1 0 6 7 8	0 0 5 0 7 6	C M 8 1 1	5 5	P E 4		4 3 2	A 2 5

6. WASTE DESCRIPTION

M = METER³
F = FEET³
G = GALLON

7. NUMBERS OF WASTE PACKAGES: PLASTIC BAGS	CARD-BOARD BOXES	DRUMS NO	DRUMS GAL.	WOODEN CRATES NO.	WOODEN CRATES VOLUME - ft³	8. GROSS VOLUME	UNITS	9. PACKAGE RADIATION AT: SURFACE MR/HR	1 METER MR/HR
			1 5 5			2	F	2	0

K = KILOGRAM
P = POUND
T = TON

10. GROSS WEIGHT	UNITS
[illegible]	[illegible]

11. ADDITIONAL DESCRIPTION OF PACKAGING AND PACKAGING MATERIALS

C = CURIE
M = GRAM

12. RADIONUCLIDE CONTENT: NUCLIDE	AMOUNT		UNITS	ERROR ON AMOUNT		AMOUNT DETERMINED BY (A = ANALYSIS, M = MEASUREMENT, E = ESTIMATE)	SS MATERIALS WRITEOFF: ACCOUNT	PROJECT CODE
[illegible]	[illegible]	E	[illegible]	[illegible]	E	[illegible]	741	309
[illegible]	[illegible]	E	[illegible]	[illegible]	E	[illegible]	741	309
		E			E			
		E			E			

[illegible] CAL. [illegible]

WASTE GENERATOR
Signature certifies that waste is in accordance with all applicable disposal requirements.

H-1 AREA REPRESENTATIVE
Signature certifies that waste package or shipment is safe to handle and transport.

GROUP LEADER (AS NECESSARY)

13. DATE DISPOSED (M M D D Y Y)	14. DISPOSAL/STORAGE LOCATION: AREA	SHAFT	PIT	POST(S)	LAYER	POS.	15. SHAFT SURFACE DOSE MR/HR

H-7 WASTE MANAGEMENT REPRESENTATIVE _____

10-78

DISCARDABLE SOLIDS

LASL Leached Solids

RA RD Item Description WP

DATE

MATERIAL TYPE

TRANSACTION NO.

Nitrate Salt

Drum No. 5076

proj 309

Ident.	From Room	Material	Net Wt. kg	Assay g Pu	% 240	Initial	Dry Box #	Auth. Page 5 Line #
IXFS-58 RI	434	54	3.25	0	12 %	[illegible]	476	11
IXFS-89-FI	"	"	6.80	0	"	"	"	11
IXFS-90-FI	"	"	13.20	0	"	"	"	11
IXFS-91-FI	"	"	8.18	0	"	"	"	11
x IXFS-58-RIA	"	"	4.30	9.70	"	"	"	11
x IXFS-92-FI	"	"	7.7	0.72	"	"	"	11
IXFS-93-FI	"	"	25.0	0	"	"	"	11
IXFS-94-FI	"	"	8.4	0	"	"	"	11
IXFS-95-FI	"	"	6.3	0	"	"	"	11
IXFS-96-FI	"	"	3.18	0.133	"	"	"	11
IXFS-97-FI	"	52	2.27	0	"	"	"	11
		MT 52	2.27	0	OK	DYMOC		
		MT 54	86.41	10.553	OK	DYMOC		
			Total wt of Drum =			165.45 kg		
	Contents of Drum have been packaged							
	with filtrate and NaOH pellets							
	within a polyethylene liner.							

S801676

Radioactive Solid Waste Disposal Recor DrumID: 006544

28-Jun-96 **RSWD: S801676**

Old RSWD:

Date Sealed: 4/15/80

Origin of Waste

Group: CMB11

TA: 55

Building: PF4

Room: 432

Program Code:

Waste Code: A25

Waste Desc:

Gross Weight : 190.9 kg

Additional Description:

Initials: CG

Entry Date: 6/28/96

re-entered ~~1/30/98~~ 8/3/98

Discardable Waste Log Sheet

DrumID: 006544

Item#	ItemID	Net (kg)	Matrix	M Code	NM	MT	Auth	Remarks
1	IXFS-154-F1	11.2	NITRITE SALTS		0	54	5/11	
2	IXFS-155-F1	7.05	NITRITE SALTS		1.7	54	5/11	
3	IXFS-156-F1	5.23	NITRITE SALTS		0.3	54	5/11	
4	IXFS-158-F1	18.86	NITRITE SALTS		1.58	52	5/11	
5	IXFS-159-F1	21.59	NITRITE SALTS		2.2	52	5/11	
6	IXFS-160-F1	7.95	NITRITE SALTS		0.45	54	5/11	
7	IXFS-161-F1	7.27	NITRITE SALTS		0.67	54	5/11	
8	IXFS-161-F1	8.08	NITRITE SALTS		0.86	54	5/11	
9	IXFS-163-F1	3.86	NITRITE SALTS		0.32	54	5/11	
10	IXFS-164-F1	2.73	NITRITE SALTS		0.38	54	5/11	
11	IXFS-165-F1	3.15	NITRITE SALTS		1.5	52	5/11	
12	IXFS-166-F1	1.89	NITRITE SALTS		1.6	52	5/11	
13	IXFS-167-F1	3.6	NITRITE SALTS		0.3	52	5/11	
14	IXFS-168-F1	9.6	NITRITE SALTS		0.33	54	5/11	
		112.06 kg						

PLEASE READ INSTRUCTIONS ON BACK CAREFULLY

H-7 Waste Management
Ext 6095 MS-592

LASL RADIOACTIVE SOLID WASTE DISPOSAL RECORD FORM

1. FORM NUMBER	2. DATE (MMDDYY)	3. RETRIEVABLE SERIAL NO.	4. ORIGIN OF WASTE: GROUP	TA	BLDG.	WING	ROOM	5. WASTE CODE
S 8 0 1676	04 15 80	006544	CMB11	55	P-4		43	A25

1 | 2 - 8 | 9 - 14 | 15 - 20 | 21 - 25 | 26 - 27 | 28 - 32 | 33 - 34 | 37 | 38 - 40

6. WASTE DESCRIPTION

41 — 80

7. NUMBERS OF WASTE PACKAGES: PLASTIC BAGS	CARD-BOARD BOXES	DRUMS NO.	DRUMS GAL.	WOODEN CRATES NO.	WOODEN CRATES VOLUME - ft³	8. GROSS VOLUME (M = METER³, F = FEET³, G = GALLON)	UNITS	9. PACKAGE RADIATION AT: SURFACE MR/HR	1 METER MR/HR
			155			2	M	2	1

2 | 2 - 8 | 9 | 11 | 12 | 14 | 15 | 17 | 18 | 19 | 20 | 21 | 22 | 26 | 27 | 30 | 31 | 32 | 36 | 37 | 41

10. GROSS WEIGHT	UNITS (K = KILOGRAM, P = POUND, T = TON)	11. ADDITIONAL DESCRIPTION OF PACKAGING AND PACKAGING MATERIALS
1909	K	

42 | 45 | 46 | 47 — 80

12. RADIONUCLIDE CONTENT: NUCLIDE	AMOUNT	±	UNITS (C = CURIE, M = GRAM)	ERROR ON AMOUNT	±	AMOUNT DETERMINED BY (A = ANALYSIS, M = MEASUREMENT, E = ESTIMATE)	SS MATERIALS WRITEOFF: ACCOUNT	PROJECT CODE
Pu 52	718	E +0	M		E	M	741	309
Pu 54	501	E +0	M		E	M	741	309
		E			E			
		E			E			

3 | 2 - 8 | 9 | 13 | 14 | 20 | 21 | 22 | 28 | 29

Ronald T. Cubitt
WASTE GENERATOR
Signature certifies that waste is in accordance with all applicable disposal requirements.

Co
H-1 AREA REPRESENTATIVE
Signature certifies that waste package or shipment is safe to handle and transport.

R. Martinez
~~GROUP LEADER (AS NECESSARY)~~

13. DATE DISPOSED (MMDDYY)	14. DISPOSAL/STORAGE LOCATION: AREA	SHAFT	PIT	POST(S)	LAYER	POS.	15. SHAFT SURFACE DOSE MR/HR

4 | 2 - 8 | 9 | 14 | 15 | 16 | 17 | 19 | 20 | 21 | 22 | 25 | 26 | 27 | 28 | 29 | 32

10-79

H-7 WASTE MANAGEMENT REPRESENTATIVE _____

2nd page

DISCARDABLE SOLIDS

[X] Leached [ ] N-Comb. [ ] Comb. [ ] PN

Seal # DRM-6544 Waste Code A-25 Date

RSWD # 1676 Project # 309 Transaction #

	Item #	Ident.	From Room Box	Net Wt. kg	Matrix	g Pu	%	MT	Generator Name	Waste Mgmt. Personnel	Auth. Pg/Ln	Date
+	1	IXFS-165-F1	G468	3.15	Inorganic Solids	1.5	6	54	C.S		5/"	4/11
+	2	IXFS-166-F1	"	1.89	"	1.6	6	52	C.S		5/"	4/11
	3	IXFS-167-F1	"	3.60	"	0.30	6	52	R.M		5/"	4/14
	4	IXFS-168-F1	"	9.60	"	0.33	12	54	R.M		5/"	4/14
	5											
	6											
	7											
	8											
	9											
	10											

MT	MASS SNM	NET WEIGHT	ACCOUNTABILITY CHECK
54	5.01 g	63.07 kg	54 PU/GLASS
52	7.18 g	49.09 kg	52 PU/GLASS

Both sheets combined

Verified Value

Bulk Weight 190.9 kg

CMB11-COF-108

1st page

DISCARDABLE SOLIDS

[X] Leached [ ] N-Comb. [ ] Comb. [ ] PN

Seal # DRM-6544 Waste Code A-25 Date

RSWD # 1676 Project # 307 Transaction #

Item #	Ident.	From Room Box	Net Wt. kg	Matrix	g Pu	%	MT	Generator Name	Waste Mgmt. Personnel	Auth. Pg/Ln	Date
1	IXFS-154-F1	468	11.2	nitrate Sol'n	0	12	54			5/11	3/28
2	IXFS-155-F1	"	7.05	"	1.70	12	54			5/11	3/28
3	IXFS-156-F1	"	5.23	"	0.3	12	54			5/11	3/28
4	IXFS-158-F1		18.86	"	1.58	6	52			5/11	3/20
5	IXFS-159-F1	"	21.59	"	2.2	6	52			5/11	4/1
6	IXFS-160-F1	"	7.95	"	0.45	12	54			5/11	4/1
7	IXFS-161-F1	"	7.27	"	0.67	12	54			5/11	4/9
8	IXFS-162-F1	"	8.18	"	0.86	12	54			5/11	4/9
9	IXFS-163-F1	"	3.86	"	0.32	12	54			5/11	4/10
10	IXFS-164-F1	"	2.73		0.38	12	54			5/11	4/10

MT MASS SNM NET WEIGHT ACCOUNTABILITY CHECK

Verified Value

Bulk Weight

See next page

CMB11-COF-108

S802701

Radioactive Solid Waste Disposal Recor

DrumID: 005274

02-Jul-96

RSWD: S802701

Old RSWD:

Date Sealed: 2/29/80

Origin of Waste

Group: CMB11

TA: 55

Building: PF4

Room: 432

Program Code:

Waste Code: A25

Waste Desc:

Gross Weight : 179.6 kg

Additional Description:

Initials: CG

Entry Date: 7/2/96

As entered KA 7/13/98

1

Discardable Waste Log Sheet

DrumID: 005274

Item#	ItemID	Net (kg)	Matrix	M Code	NM	MT	Auth	Remarks
1	IXFS-135-F1	5.68	NITRATE SALTS		0.76	54	5/11	
2	IXFS-136-F1	11.4	NITRATE SALTS		0.7	54	5/11	
3	IXFS-137-F1	4.6	NITRATE SALTS		0.12	54	5/11	
4	IXFS-138-F1	5.91	NITRATE SALTS		0	52	5/11	
5	IXFS-139-F1	7.73	NITRATE SALTS		0	52	5/11	
6	IXFS-140-F1	12.05	NITRATE SALTS		1.93	52	5/11	
7	IXFS-141-F1	15	NITRATE SALTS		2.3	52	5/11	
8	IXFS-142-F1	18.2	NITRATE SALTS		0	54	5/11	
9	IXFS-143-F1	21.82	NITRATE SALTS		0	54	5/11	
		102.39 kg						

PLEASE READ INSTRUCTIONS ON BACK CAREFULLY

H-7 Waste Management
Ext 6095 MS-592

LASL RADIOACTIVE SOLID WASTE DISPOSAL RECORD FORM

1. FORM NUMBER	2. DATE (MMDDYY)	3. RETRIEVABLE SERIAL NO.	4. ORIGIN OF WASTE: GROUP	TA	BLDG.	WING	ROOM	5. WASTE CODE
S 8 0 2701	0 2 2 9 8 0	0 0 5 2 7 4	C M B 1 1	5 5	P F 4		4 3 2	A 2 5

6. WASTE DESCRIPTION:

7. NUMBERS OF WASTE PACKAGES: PLASTIC BAGS	CARD-BOARD BOXES	DRUMS NO.	DRUMS GAL.	WOODEN CRATES NO.	WOODEN CRATES VOLUME - ft³	8. GROSS VOLUME	UNITS (M = METER³, F = FEET³, G = GALLON)	9. PACKAGE RADIATION AT: SURFACE MR/HR	1 METER MR/HR
		1	5 5			2	M	1	1

10. GROSS WEIGHT	UNITS (K = KILOGRAM, P = POUND, T = TON)
1 7 9	K

11. ADDITIONAL DESCRIPTION OF PACKAGING AND PACKAGING MATERIALS:

12. RADIONUCLIDE CONTENT: NUCLIDE	AMOUNT	±	UNITS (C = CURIE, M = GRAM)	ERROR ON AMOUNT	±	AMOUNT DETERMINED BY (A = ANALYSIS, M = MEASUREMENT, E = ESTIMATE)	SS MATERIALS WRITEOFF: ACCOUNT	PROJECT CODE
Pu 52	4230	E + 10	M		E	M	741	309
Pu 54	1580	E + 0	M		E	M	741	309
		E			E			
		E			E			

WASTE GENERATOR
Signature certifies that waste is in accordance with all applicable disposal requirements.

H-1 AREA REPRESENTATIVE
Signature certifies that waste package or shipment is safe to handle and transport.

GROUP LEADER (AS NECESSARY)

13. DATE DISPOSED (MMDDYY)	14. DISPOSAL/STORAGE LOCATION: AREA	SHAFT	PIT	POST(S)	LAYER	POS.	15. SHAFT SURFACE DOSE MR/HR

10-79

H-7 WASTE MANAGEMENT REPRESENTATIVE _____

DISCARDABLE SOLIDS

[X] Leached [ ] N-Comb. [ ] Comb. [ ] PN

Seal # DRM- 5274 Waste Code F-5 Date

RSWD # 270 Project # 309 Transaction #

Item #	Ident.	From Room Box	Net Wt. kg	Matrix	g Pu	%	MT	Generator Name	Waste Mgmt. Personnel	Auth. Pg/Ln	Date
1	IXFS-135-F1	6468	5.68	Nitrate Salts	0.76	12	54	AM		5/11	7/28
2	IXFS-136-F1		11.4		0.70	12	54	AM		5/11	
3	IXFS-137-F1		4.6		0.12	12	54	AM		5/11	
4	IXFS-138-F1		5.91		0	6	52	AM		5/11	
5	IXFS-139-F1		7.73		0	6	52	AM		5/11	
6	IXFS-140-F1		12.05		1.93	6	52	AM		5/11	
7	IXFS-141-F1		15.0		2.30	6	52	AM		5/11	
8	IXFS-142-F1		18.2		0	12	54	AM		5/11	
9	IXFS-143-F1		21.82		0	12	54	AM		5/11	
10										5/11	

MT	MASS SNM	NET WEIGHT	ACCOUNTABILITY CHECK
52	4.23	45.69 Kg	OK Dymac
54	1.58	61.70 Kg	OK Dymac

Verified Value

Bulk Weight 179.6 Kg

CMB11-COF-108

S802739

1997 0175

Radioactive Solid Waste Disposal Recor DrumID: 006513

02-Jul-96 **RSWD: S802739**

Old RSWD:

Date Sealed: 3/19/80

Origin of Waste

Group: CMB11

TA: 55

Building: PF4

Room: 432

Program Code:

Waste Code: A25

Waste Desc:

Gross Weight : 184.5 kg

Additional Description:

Initials: CG

Entry Date: 7/2/96

re-entered CG ~~7/30/98~~ 8/3/98

Discardable Waste Log Sheet

DrumID: 006513

Item#	ItemID	Net (kg)	Matrix	M Code	NM	MT	Auth	Remarks
1	IXFS-144-F1	17.95	NITRATE SALTS		0	54	5/11	
2	IXFS-145-F1	20.57	NITRATE SALTS		3.4	52	5/11	
3	IXFS-146-F1	7.5	NITRATE SALTS		0.7	54	5/11	
4	IXFS-147-F1	4.55	NITRATE SALTS		0.46	54	5/11	
5	IXFS-148-F1	4.09	NITRATE SALTS		0.4	52	5/11	
6	IXFS-149-F1	8.64	NITRATE SALTS		0	54	5/11	
7	IXFS-150-F1	9.5	NITRATE SALTS		0	54	5/11	
8	IXFS-151-F1	14.54	NITRATE SALTS		0.83	54	5/11	
9	IXFS-152-F1	5.5	NITRATE SALTS		0.67	52	5/11	
10	IXFS-153-F1	13.41	NITRATE SALTS		0	54	5/11	
		106.25 kg						

PLEASE READ INSTRUCTIONS ON BACK CAREFULLY

H-7 Waste Management
Ext 6095

LASL RADIOACTIVE SOLID WASTE DISPOSAL RECORD FORM

1. FORM NUMBER	2. DATE (MMDDYY)	3. RETRIEVABLE SERIAL NO.	4. ORIGIN OF WASTE: GROUP	TA	BLDG.	MTNG	ROOM	5. WASTE CODE
S80,2739	03,19,80	00,651,3	CMB11	55	PF4		432	A25

6. WASTE DESCRIPTION

7. NUMBERS OF WASTE PACKAGES: PLASTIC BAGS	CARD-BOARD BOXES	DRUMS NO.	DRUMS GAL.	WOODEN CRATES NO.	WOODEN CRATES VOLUME - ft^3	8. GROSS VOLUME	UNITS (M = METER³, F = FEET³, G = GALLON)	9. PACKAGE RADIATION AT: SURFACE MR/HR	1 METER MR/HR
			155			2	M	1	0

10. GROSS WEIGHT	UNITS (K = KILOGRAM, P = POUND, T = TON)	11. ADDITIONAL DESCRIPTION OF PACKAGING AND PACKAGING MATERIALS
1,845	K	

12. RADIONUCLIDE CONTENT: NUCLIDE	AMOUNT	±	UNITS (C = CURIE, M = GRAM)	ERROR ON AMOUNT	±	AMOUNT DETERMINED BY (A = ANALYSIS, M = MEASUREMENT, E = ESTIMATE)	SS MATERIALS WRITEOFF: ACCOUNT	PROJECT CODE
Pu 52	4470	E +0	M		E	M	741	309
Pu 54	199	E +0	M		E	M	741	309
		E			E			
		E			E			

WASTE GENERATOR
Signature certifies that waste is in accordance with all applicable disposal requirements.

H-1 AREA REPRESENTATIVE
Signature certifies that waste package or shipment is safe to handle and transport.

GROUP LEADER (AS NECESSARY)

13. DATE DISPOSED (MMDDYY)	14. DISPOSAL/STORAGE LOCATION: AREA	SHAFT	PIT	POST(S)	LAYER	POS.	15. SHAFT SURFACE DOSE MR/HR

10-79

H-7 WASTE MANAGEMENT REPRESENTATIVE _____

DISCARDABLE SOLIDS

[X] Leached [ ] N-Comb. [ ] Comb. [ ] PN

Seal # DRM 6513 Waste Code A25 Date

RSWD # 2739 Project # 309 Transaction #

	Item #	Ident.	From Room Box	Net Wt. kg	Matrix	g Pu	%	MT	Generator Name	Waste Mgmt. Personnel	Auth. Pg/Ln	Date
	1	IXFS-144-F1	G468	17.95	nitrate Salt	0	12	54	L.Q		5/11	2/29
+	2	IXFS-145-F1	"	20.57	"	3.40	6	52	L.Q		5/11	2/29
X	3	IXFS-146-F1	"	7.5	"	0.70	12	54	A.M		5/11	3/5
	4	IXFS-147-F1	"	4.55	"	0.46	12	54	A.M		5/11	3/6
	5	IXFS-148-F1	"	4.09	"	0.40	6	52	A.M		5/11	3/6
	6	IXFS-149-F1	"	8.64	"	0	12	54	A.M		5/11	3/17
	7	IXFS-150-F1	"	9.50	"	0	12	54	A.M		5/11	3/17
+	8	IXFS-151-F1	"	14.54	"	0.83	12	54	A.M		5/11	3/17
X	9	IXFS-152-F1	"	5.5	"	0.67	6	52	A.M		5/11	3/17
	10	IXFS-153-F1	"	13.41	"	0	12	54	A.M		5/11	3/18

MT	MASS SNM	NET WEIGHT	ACCOUNTABILITY CHECK
52	4.47 g	30.15 kg	OK DYM
54	1.99 g	76.09	OK DYM

Verified Value 6.0 g

Bulk Weight 184.5 Kg

CMB11-COF-108

S802833

Radioactive Solid Waste Disposal Recor DrumID: 006201

03-Jul-96

RSWD: S802833

Old RSWD:

Date Sealed: 5/9/80

Origin of Waste

Group: CMB11

TA: 55

Building: PF4

Room: 432

Program Code:

Waste Code: A25

Waste Desc:

Gross Weight : 189.1 kg

Additional Description:

Initials: CG

Entry Date: 7/3/96

re-entered 7-30-98

Discardable Waste Log Sheet

DrumID: 006201

Item#	ItemID	Net (kg)	Matrix	M Code	NM	MT	Auth	Remarks
1	IXFS-169-F1	2.3	NITRATE SALTS		0.08	56	5/11	
2	IXFS-170-F1	3.86	NITRATE SALTS		0.26	54	5/11	
3	IXFS-171-F1	4.77	NITRATE SALTS		0.52	52	5/11	
4	IXFS-172-F1	11.4	NITRATE SALTS		0.54	54	5/11	
5	IXFS-173-F1	5.68	NITRATE SALTS		1.03	52	5/11	
6	IXFS-174-F1	8.64	NITRATE SALTS		0.35	52	5/11	
7	IXFS-175-F1	8.41	NITRATE SALTS		0.93	52	5/11	
8	IXFS-176-F1	5.91	NITRATE SALTS		0.81	52	5/11	
9	IXFS-177-F1	11.61	NITRATE SALTS		0	54	5/11	
10	IXFS-178-F1	8.6	NITRATE SALTS		0	54	5/11	
11	IXFS-179-F1	31.1	NITRATE SALTS		0	52	5/11	
12	IXFS-180-F1	10.9	NITRATE SALTS		0	54	5/11	
		113.18 kg						

PLEASE READ INSTRUCTIONS ON BACK CAREFULLY

H-7 Waste Management
Ext 6095 MS-592

LASL RADIOACTIVE SOLID WASTE DISPOSAL RECORD FORM

1. FORM NUMBER	2. DATE (M M D D Y Y)	3. RETRIEVABLE SERIAL NO.	4. ORIGIN OF WASTE: GROUP	TA	BLDG.	WING	ROOM	5. WASTE CODE
S 8 0 2833	0 5 0 9 8 0	0 0 6 2 0 1	C M B 1 1	5 5	P F 4		4 3 2	A 2 5

6. WASTE DESCRIPTION

7. NUMBERS OF WASTE PACKAGES: PLASTIC BAGS	CARD-BOARD BOXES	DRUMS NO.	DRUMS GAL.	WOODEN CRATES NO.	WOODEN CRATES VOLUME - ft³	8. GROSS VOLUME (M = METER³, F = FEET³, G = GALLON)	UNITS	9. PACKAGE RADIATION AT: SURFACE MR/HR	1 METER MR/HR
		1	55			2	M	3	2

10. GROSS WEIGHT	UNITS (K = KILOGRAM, P = POUND, T = TON)
1 8 9 1	K

11. ADDITIONAL DESCRIPTION OF PACKAGING AND PACKAGING MATERIALS

12. RADIONUCLIDE CONTENT: NUCLIDE	AMOUNT	±	UNITS (C = CURIE, M = GRAM)	ERROR ON AMOUNT	±	AMOUNT DETERMINED BY (A = ANALYSIS, M = MEASUREMENT, E = ESTIMATE)	SS MATERIALS WRITEOFF: ACCOUNT	PROJECT CODE
Pu 52	3.64	+ 0	M			M	741	309
Pu 54	8.0	− 1	M			M	741	309
Pu 56	0.8	− 1	M			M	741	309

Ronald T. Cubitt Co.
WASTE GENERATOR
Signature certifies that waste is in accordance with all applicable disposal requirements.

H-1 AREA REPRESENTATIVE
Signature certifies that waste package or shipment is safe to handle and transport.

R. Martinez
GROUP LEADER (AS NECESSARY)

13. DATE DISPOSED (M M D D Y Y)	14. DISPOSAL/STORAGE LOCATION: AREA	SHAFT	PIT	POST(S)	LAYER	POS.	15. SHAFT SURFACE DOSE MR/HR

10-79

H-7 WASTE MANAGEMENT REPRESENTATIVE _____

DISCARDABLE SOLIDS

[X] Leached [ ] N-Comb. [ ] Comb. [ ] PN

Seal # DRM-6201 Waste Code A-25 Date 5/5/80

RSWD # 2833 Project # 309 Transaction # _____

	Item #	Ident.	From Room Box	Net Wt. kg	Matrix	g Pu	%	MT	Generator Name	Waste Mgmt. Personnel	Auth. Pg/Ln	Date
	1	IXFS-169-F1	6457	2.3	[illegible]	0.08	16.6	56	R.M		5/11	4/18
	2	IXFS-170-F1	"	3.86	"	0.26	12	54	C.S		5/11	4/18
X	3	IXFS-171-F1	"	4.77	"	0.52	6	52	C.S		5/11	4/21
X	4	IXFS-172-F1	"	11.4 Kg	"	0.54	12%	54	B.R		5/11	4/22
X	5	IXFS-173-F1	"	5.68 Kg	"	1.03	6%	52	B.R		5/11	4/23
	6	IXFS-174-F1	"	8.64 Kg	"	.35	6%	52	[illegible]		5/11	4-25
X	7	IXFS-175-F1	"	8.41 Kg	"	.93	6%	52	[illegible]		5/11	4-25
	8	IXFS-[illegible]	"	5.91 Kg	"	.21	6%	52	[illegible]		[illegible]	[illegible]
	9	[illegible]	"	[illegible] Kg	"	0	[illegible]	52	[illegible]		[illegible]	
	10	IXFS-178-F1	"	8.6 Kg	"	0	12%	54	BR		5/11	5/5

MT	MASS SNM	NET WEIGHT
56	0.08 g	2.3 Kg
54	0.80 g	16.27 Kg
52	3.64 g	64.51 Kg

ACCOUNTABILITY CHECK

Verified Value 4.0g

Bulk Weight 189.9 Kg

continued pg. 2

CMB11-COF-108

pg 2 continued

DISCARDABLE SOLIDS

☒ Leached ☐ N-Comb. ☐ Comb. ☐ PN

Seal # DRM-6201 Waste Code _____ Date 5/5/80

RSWD # _____ Project # 309 Transaction # _____

Item #	Ident.	From Room Box	Net Wt. kg	Matrix	g Pu	%	MT	Generator Name	Waste Mgmt. Personnel	Auth. Pg/Ln	Date
1	TXFS-179-F1	6468	31.1 Kg	nitrat. Salt	0	6%	52			5/11	5/5
2	TXFS-180-F1	"	10.9 Kg	" "	0	12%	54			5/11	5/5
3											
4											
5											
6											
7											
8											
9											
10											

MT MASS SNM NET WEIGHT ACCOUNTABILITY CHECK

Verified Value _____

Bulk Weight _____

see page 1 for details

CMB11-COF-108

S803078

1 9 7 1 0 7 2

Radioactive Solid Waste Disposal Recor

DrumID: 006725

11-Jul-96

RSWD: S803078

Old RSWD:

Date Sealed: 7/25/80

Origin of Waste

Group: CMB11

TA: 55

Building: PF4

Room: 432

Program Code:

Waste Code: A25

Waste Desc:

Gross Weight : 173.4 kg

Additional Description:

Initials: CG

Entry Date: 7/11/96

re-entered 7-24-98

Discardable Waste Log Sheet

DrumID: 006725

Item#	ItemID	Net (kg)	Matrix	M Code	NM	MT	Auth	Remarks
1	IXFS-198-F1	9.8	NITRATE SALTS		0.33	54	5/11	
2	IXFS-199-F1	10	NITRATE SALTS		3.75	52	5/11	
3	IXFS-201-F1	8.18	NITRATE SALTS		1.02	52	5/11	
4	IXFS-203-F1	2.85	NITRATE SALTS		1.2	52	5/11	
5	IXFS-204-F1	2.6	NITRATE SALTS		0.42	52	5/11	
6	IXFS-205-F1	4.3	NITRATE SALTS		1.72	52	5/11	
7	IXFS-206-F1	7.5	NITRATE SALTS		0	54	5/11	
8	IXFS-207-F1	14.32	NITRATE SALTS		0	54	5/11	
9	IXFS-208-F1	6.59	NITRATE SALTS		0.07	54	5/11	
10	IXFS-209-F1	3.64	NITRATE SALTS		0.21	52	5/11	
11	IXFS-210-F1	10.7	NITRATE SALTS		1.7	54	5/11	
12	IXFS-211-F1	2	NITRATE SALTS		0.45	52	5/11	
13	IXFS-212-F1	2.9	NITRATE SALTS		1.5	52	5/11	
14	IXFS-213-F1	1.3	NITRATE SALTS		0	53	5/11	
15	IXFS-214-F1	6.8	NITRATE SALTS		0	54	5/11	
16	IXFS-216-F1	1.87	NITRATE SALTS		0.18	52	5/11	
17	IXFS-217-F1	3.24	NITRATE SALTS		0.16	54	5/11	
18	IXFS-218-F1	2.73	NITRATE SALTS		0.39	55	5/11	
		101.32 kg						

1 9 7 1 0 3 4 PLEASE READ INSTRUCTIONS ON BACK CAREFULLY

H-7 Waste
Ext 6095

LASL RADIOACTIVE SOLID WASTE DISPOSAL RECORD FORM

1. FORM NUMBER: S 8 0 3078

2. DATE (M M D D Y Y)	3. RETRIEVABLE SERIAL NO.	4. ORIGIN OF WASTE: GROUP	TA	BLDG.	WING	ROOM	5. WASTE CODE
0 7 2 5 8 0	0 0 6 7 2 5	CMB1.1	55	PF4		432	125

6. WASTE DESCRIPTION

7. NUMBERS OF WASTE PACKAGES: PLASTIC BAGS	CARD-BOARD BOXES	DRUMS NO.	DRUMS GAL.	WOODEN CRATES NO.	WOODEN CRATES VOLUME - ft³	8. GROSS VOLUME (M = METER³, F = FEET³, G = GALLON)	UNITS	9. PACKAGE RADIATION AT: SURFACE MR/HR	1 METER MR/HR
		15.5				2	M		0

10. GROSS WEIGHT (K = KILOGRAM, P = POUND, T = TON)	UNITS
173.4	K

11. ADDITIONAL DESCRIPTION OF PACKAGING AND PACKAGING MATERIALS

12. RADIONUCLIDE CONTENT: NUCLIDE	AMOUNT	±	UNITS (C = CURIE, M = GRAM)	ERROR ON AMOUNT	±	AMOUNT DETERMINED BY (A = ANALYSIS, M = MEASUREMENT, E = ESTIMATE)	SS MATERIALS WRITEOFF: ACCOUNT	PROJECT CODE
PU 52	10.45	E +.1	M		E	M	741	307
PU 53	0	E +.0	M		E	M		
PU 54	2.26	E +.0	M		E	M		
PU 55	0.39	E +.0	M		E	M		

WASTE GENERATOR
Signature certifies that waste is in accordance with all applicable disposal requirements.

H-1 AREA REPRESENTATIVE
Signature certifies that waste package or shipment is safe to handle and transport.

GROUP LEADER (AS NECESSARY)

13. DATE DISPOSED (M M D D Y Y)	14. DISPOSAL/STORAGE LOCATION: AREA	SHAFT	PIT	POST(S)	LAYER	POS.	15. SHAFT SURFACE DOSE MR/HR

10-79

H-7 WASTE MANAGEMENT REPRESENTATIVE _____

7-2

Page 172

DISCARDABLE SOLIDS

[X] Leached [ ] N-Comb. [ ] Comb. [ ] PN

Seal # DCM-6725 Waste Code A25 Date

RSWD # 3028 Project # 309 Transaction #

Item #	Ident.	From Room Box	Net Wt. kg	Matrix	g Pu	%	MT	Generator Name	Waste Mgmt. Personnel	Auth. Pg/Ln	Date
1	IXFS-198-F1	468	9.80 kg	nitrate Salts	0.33	12	54	A.M		5/11	6/5
2	IXFS-199-F1	"	10.00	"	3.75	6	52	A.M		5/11	6/
3	IXFS-201-F1	"	8.18	"	1.02	6	52	A.M		5/11	7/
4	IXFS-203-F1	"	2.85	"	1.50	6	52	L.C.		5/	
5	IXFS-204-F1	"	[illegible]	"	.42	6	52	L.C.		/	
6	IXFS-205-F1	"	4.3	"	1.72	6	52	A.M		5/11	6/30
7	IXFS-206-F1	"	7.5	"	0	12	54	L.C		5/11	7/1
8	IXFS-207-F1	"	4.32	"	0	12	54	A.M		5/11	7/8
9	IXFS-208-F1	"	6.59	"	0.07	12	54	L.C		5/11	7/8
10	IXFS-209-F1	"	3.64	"	0.51	6	52	A.M		5/11	7/14

MT MASS SNM NET WEIGHT ACCOUNTABILITY CHECK

Verified Value

Bulk Weight

See Page 272

CMB11-COF-108

1917 1035

242

Page 2 of 2

DISCARDABLE SOLIDS

[X] Leached [ ] N-Comb. [ ] Comb. [ ] PN

Seal # [illegible] Waste Code _____ Date _____

RSWD # 3078 Project # 309 Transaction # _____

	Item #	Ident.	From Room Box	Net Wt. kg	Matrix	g Pu	%	MT	Generator Name	Waste Mgmt. Personnel	Auth. Pg/Ln	Date
+	1	TXFS-210-F1	468	10.7	[illegible]	1.7	12	54	R.M		5/11	7/14
	2	TXFS-211-F1	"	2.0	"	0.45	6	52	R.M		5/11	7/17
X	3	TXFS-212-F1	"	[illegible]	"	1.5	6	52	L.C		5/11	7/18
	4	TXFS-213-F1	"	1.3	"	0	9	53	L.C		5/11	7/18
	5	TXFS-214-F1	"	6.8	"	0	12	54	A.M		5/11	7/25
	6	TXFS-[illegible]-F1	"	1.87	"	.18	6	52	A.M		5/11	7/25
	7	[illegible]	"	3.24	"	.16	12	54	A.M		5/11	7/25
	8	TXFS-218-F1		[illegible]	"	.39	14	55	[illegible]		[illegible]	
	9											
	10											

MT	MASS SNM	NET WEIGHT	ACCOUNTABILITY CHECK
52	10.45 g	38.34 kg	OK PFLASS
53	0 g	[illegible]	OK
54	[illegible]	[illegible]	OK PFLASS
55	0.39 g	[illegible]	OK

Verified Value _____

Bulk Weight [illegible] g

CB11-COF-108

S804948

Radioactive Solid Waste Disposal Recor

DrumID: 008031

13-Jul-96

RSWD: S804948

Old RSWD:

Date Sealed: 9/8/80

Origin of Waste

Group: CMB11

TA: 55

Building: PF4

Room: 432

Program Code:

Waste Code: A25

Waste Desc:

Gross Weight : 187.7 kg

Additional Description:

Initials: JT

Entry Date: 7/13/96

re-entered [illegible] 7/14/98

Discardable Waste Log Sheet

DrumID: 008031

Item#	ItemID	Net (kg)	Matrix	M Code	NM	MT	Auth	Remarks
1	IXFS-229-F1	29.7	NITRATE SALTS		0.15	42	7/11	
2	IXFS-230-F1	27.1	NITRATE SALTS		0.83	54	5/11	
3	IXFS-231-F1	28.6	NITRATE SALTS		0	54	5/11	
4	IXFS-232-F1	15.4	NITRATE SALTS		3.88	52	5/11	
		100.8 kg						

LASL RADIOACTIVE SOLID WASTE DISPOSAL RECORD FORM

1. FORM NUMBER	2. DATE (MMDDYY)	3. RETRIEVABLE SERIAL NO.	4. ORIGIN OF WASTE: GROUP	TA	BLDG.	WING	ROOM	5. WASTE CODE
S 8 0 4948	0 9 0 8 8 0	0 0 8 0 3 1	C M B 1 1	5 5	P F 4		4 3 2	A 2 5

6. WASTE DESCRIPTION

	7. NUMBERS OF WASTE PACKAGES: PLASTIC BAGS	CARDBOARD BOXES	DRUMS NO.	DRUMS GAL.	WOODEN CRATES NO.	WOODEN CRATES VOLUME - ft³	8. GROSS VOLUME	UNITS (M = METER³, F = FEET³, G = GALLON)	9. PACKAGE RADIATION AT: SURFACE MR/HR	1 METER MR/HR
2			1	55			2	M	1	0

10. GROSS WEIGHT	UNITS (K = KILOGRAM, P = POUND, T = TON)	11. ADDITIONAL DESCRIPTION OF PACKAGING AND PACKAGING MATERIALS
1 8 7 7	K	

12. RADIONUCLIDE CONTENT: NUCLIDE	AMOUNT	±	UNITS (C = CURIE, M = GRAM)	ERROR ON AMOUNT	±	AMOUNT DETERMINED BY (A = ANALYSIS, M = MEASUREMENT, E = ESTIMATE)	SS MATERIALS WRITEOFF: ACCOUNT	PROJECT CODE
3 Pu 242	1.5	E -1	M	.	E	M	741	309
3 Pu 52	3.8	E +0	M	.	E	M	741	309
3 Pu 54	8.3	E -1	M	.	E	M	741	309
3	.	E		.	E			

WASTE GENERATOR
Signature certifies that waste is in accordance with all applicable disposal requirements.

H-1 AREA REPRESENTATIVE
Signature certifies that waste package or shipment is safe to handle and transport.

~~GROUP LEADER (AS NECESSARY)~~

13. DATE DISPOSED (MMDDYY)	14. DISPOSAL/STORAGE LOCATION: AREA	SHAFT	PIT	POST(S)	LAYER	POS.	15. SHAFT SURFACE DOSE MR/HR
4							

10-79

H-7 WASTE MANAGEMENT REPRESENTATIVE _____

DISCARDABLE SOLIDS

[X] Leached [ ] N-Comb. [ ] Comb. [ ] PN

Seal # DRM-8031 Waste Code A-25 Date

RSWD # 11948 Project # 309 Transaction #

Item #	Ident.	From Room Box	Net Wt. kg	Matrix	g Pu	%	MT	Generator Name	Waste Mgmt. Personnel	Auth. Pg/Ln	Date
1	IXFS-229-F1	466	29.70	nitrate solids	0.15	95	42	A.M		7/11	9/2
X 2	IXFS-230-F1	"	27.1	"	0.83	12	54	R.M		5/11	9/3
3	IXFS-231-F1	"	28.6	"	0	12	54	R.M		5/11	9/3
X 4	IXFS-232-F1	"	15.4	"	3.88	6	52	A.M		5/11	9/5
5											
6											
7											
8											
9											
10											

MT	MASS SNM	NET WEIGHT	ACCOUNTABILITY CHECK
42	0.15g	29.70 Kg	OK PF/LASS
52	3.88	15.4 Kg	" "
54	0.83	55.7 Kg	" "

Verified Value 4.86

Bulk Weight 187.7 Kg

CMB11-COF-108

S804995

4 0 7 2 9 9 8 0

Radioactive Solid Waste Disposal Recor DrumID: 009577

14-Jul-96 RSWD: S804995

Old RSWD:

Date Sealed: 11/18/80

Origin of Waste

Group: CMB11

TA: 55

Building: PF4

Room: 432

Program Code:

Waste Code: A25

Waste Desc:

Gross Weight : 188.4 kg

Additional Description:

Initials: CG

Entry Date: 7/14/96

P reland 7-22-98

Discardable Waste Log Sheet

DrumID: 009577

Item#	ItemID	Net (kg)	Matrix	M Code	NM	MT	Auth	Remarks
1	IXFS-257-F1	10.9	NITRATE SALTS		0	54	5/11	
2	IXFS-259-F1	3	NITRATE SALTS		0.05	54	5/11	
3	IXFS-261-F1	17.95	NITRATE SALTS		2.93	52	5/11	
4	IXFS-262-F1	16.4	NITRATE SALTS		2.17	52	5/11	
5	IXFS-260-F1	21.1	NITRATE SALTS		0	52	5/11	
6	IXFS-264-F1	6.36	NITRATE SALTS		0.8	52	5/11	
7	IXFS-265-F1	4.77	NITRATE SALTS		0.73	52	5/11	
8	IXFS-266-F1	3.63	NITRATE SALTS		0.48	52	5/11	
9	IXFS-267-F1	7.5	NITRATE SALTS		2.98	52	5/11	
10	IXFS-268-R1	17.3	NITRATE SALTS		1.22	52	5/11	
11	IXFS-269-F1	6.12	NITRATE SALTS		1.63	52	5/11	
		115.03 kg						

0 1 9 2 0 0 8 8

LASL RADIOACTIVE SOLID WASTE DISPOSAL RECORD FORM

1. FORM NUMBER	2. DATE (MMDDYY)	3. RETRIEVABLE SERIAL NO.	4. ORIGIN OF WASTE: GROUP	TA	BLDG.	WING	ROOM	5. WASTE CODE
S 8 0 4995	1 1 7 8 6 0	0 0 9 5 7 7	C M B 1 1	5 5	P 4 4		4 3 2	A 2 5

6. WASTE DESCRIPTION

7. NUMBERS OF WASTE PACKAGES: PLASTIC BAGS	CARD-BOARD BOXES	DRUMS NO.	DRUMS GAL.	WOODEN CRATES NO.	WOODEN CRATES VOLUME - ft³	8. GROSS VOLUME (M = METER³, F = FEET³, G = GALLON)	UNITS	9. PACKAGE RADIATION AT: SURFACE MR/HR	1 METER MR/HR
			1 5 5			2	M	2	1

10. GROSS WEIGHT	UNITS (K = KILOGRAM, P = POUND, T = TON)	11. ADDITIONAL DESCRIPTION OF PACKAGING AND PACKAGING MATERIALS
1 9 8 4	K	

12. RADIONUCLIDE CONTENT: NUCLIDE	AMOUNT	±	UNITS (C = CURIE, M = GRAM)	ERROR ON AMOUNT	±	AMOUNT DETERMINED BY (A = ANALYSIS, M = MEASUREMENT, E = ESTIMATE)	SS MATERIALS WRITEOFF: ACCOUNT	PROJECT CODE
Pu 54	0 5	- 1	M			M	741	309
Pu 52	1 2 9 4	+ 1	M			M	741	309

Ronald L. Corbitt
WASTE GENERATOR
Signature certifies that waste is in accordance with all applicable disposal requirements.

H-1 AREA REPRESENTATIVE
Signature certifies that waste package or shipment is safe to handle and transport.

R. Martinez
GROUP LEADER (AS NECESSARY)

13. DATE DISPOSED (MMDDYY)	14. DISPOSAL/STORAGE LOCATION: AREA	SHAFT	PIT	POST(S)	LAYER	ROS	15. SHAFT SURFACE DOSE MR/HR
				T			

10-79

H-7 WASTE MANAGEMENT REPRESENTATIVE

DISCARDABLE SOLIDS

[X] Leached [ ] N-Comb. [ ] Comb. [ ] PW

Seal # DRM-9577 Waste Code A-25 WP Date

RSWD # 4995 Project # 309 Transaction #

Item #	Ident.	From Room Box	Net Wt. kg	Matrix	g Pu	%	MT	Generator Name	Waste Mgmt. Personnel	Auth. Pg/Ln	Date
1	IXFS-269-F1	468	6.12	NITRATE SALTS	1.63	6	52	RHM	RON	5/11	11/13
2											
3											
4											
5											
6											
7											
8											
9											
10											

MT	MASS SNM	NET WEIGHT	ACCOUNTABILITY CHECK
54	0.05 g	13.9 Kg	OK
52	12.94 g	101.13 Kg	PFLASS

Verified Value 12.99 g

Bulk Weight [illegible]

SENT OUT 11/17/89

CMB11-COF-108

DISCARDABLE SOLIDS

[X] Leached [ ] N-Comb. [ ] Comb. [ ] PN

Seal # DRM-95[illegible] Waste Code A-25 WP Date

RSWD # 4995 Project # 309 Transaction #

Item #	Ident.	From Room Box	Net Wt. kg	Matrix	g Pu	%	MT	Generator Name	Waste Mgmt. Personnel	Auth. Pg/Ln	Date
1	IXFS-257-F1	468	15.9	Nitrate Salts	0	12	52		RON	5/11	
2	IXFS-2[illegible]-F1	"	3.1	Nitrate Salts	.05	12	[illegible]			-/11	
3	IXFS-[illegible]-F1	"	17.95	Nitrate Salts	2.93	6	52	RAS		5/11	[illegible]
4	IXFS-262-F1	"	16.40	[illegible]	[illegible]	6	52	[illegible]		5/11	
5	IXFS-2[illegible]-F1	"	21.1	Nitrate Salts	-0-	6	52	RHM		5/11	
6	IXFS-264-F1	"	6.36	Nitrate Salts	.80	6	52	RHM		5/11	
7	IXFS-265-F1	"	4.77	Nitrate Salts	.73	6	52	RHM		5/11	
8	IXFS-266-F1	"	3.63	"	.48	6	52	JJT		5/	11/7
9	IXFS-267-F1	"	7.50	Nitrate Salts	2.98	6	52	JJT		-/	11/7
10	IXFS-268-F1	"	17.3	"	1.22	6	52	[illegible]K		5/11	11/12

MT MASS SNM NET WEIGHT ACCOUNTABILITY CHECK Verified Value

Bulk Weight see pg 2 of 2

see page 2 of 2

CMH1-COF-

S805051

1 9 7 1 3 1 2

Radioactive Solid Waste Disposal Recor

DrumID: 006789

16-Jul-96

RSWD: S805051

Old RSWD:

Date Sealed: 9/3/80

Origin of Waste

Group: CMB11

TA: 55

Building: PF4

Room: 432

Program Code:

Waste Code: A25

Waste Desc:

Gross Weight : 180 kg

Additional Description:

Initials: JT

Entry Date: 7/16/96

to entered CG 6/15/98

Discardable Waste Log Sheet

DrumID: 006789

Item#	ItemID	Net (kg)	Matrix	M Code	NM	MT	Auth	Remarks
1	IXFS-219-F1	3.1	NITRATE SALTS		0.52	52	5/11	
2	IXFS-220-F1	4.77	NITRATE SALTS		0.82	52	5/11	
3	V425A	1.65	NITRATE SALTS		0.26	54	5/11	
4	IXFS-221-F1	3.4	NITRATE SALTS		0.5	52	5/11	
5	IXFS-222-F1	13.1	NITRATE SALTS		0.43	52	5/11	
6	IXFS-223-F1	6.4	NITRATE SALTS		0.3	52	5/11	
7	IXFS-224-F1	2.7	NITRATE SALTS		0.11	52	5/11	
8	IXFS-225-F1	13.7	NITRATE SALTS		1.5	52	5/11	
9	IXFS-226-F1	14.2	NITRATE SALTS		0	52	5/11	
10	IXFS-227-F1	10.5	NITRATE SALTS		1.8	52	5/11	
11	IXFS-228-F1	5	NITRATE SALTS		0.13	54	5/11	
12	IXFS-228-R1	5	NITRATE SALTS		0.24	54	5/11	
13	IXFS-229-FA	28	NITRATE SALTS		0.06	42	7/11	
		111.52 kg						

LASL RADIOACTIVE SOLID WASTE DISPOSAL RECORD FORM

1. FORM NUMBER	2. DATE (M M D D Y Y)	3. RETRIEVABLE SERIAL NO.	4. ORIGIN OF WASTE: GROUP	TA	BLDG.	WING	ROOM	5. WASTE CODE
S 8 0 5051	0 8 0 3 8 0	0 0 6 7 8 9	C M 6 1 1	5 5	P F 4		4 3 2	A 2 5

6. WASTE DESCRIPTION

7. NUMBERS OF WASTE PACKAGES: PLASTIC BAGS	CARD-BOARD BOXES	DRUMS NO.	DRUMS GAL.	WOODEN CRATES NO.	WOODEN CRATES VOLUME - ft³	8. GROSS VOLUME (M = METER³, F = FEET³, G = GALLON)	UNITS	9. PACKAGE RADIATION AT: SURFACE MR/HR	1 METER MR/HR
			1 5 5			2	M	1	0

10. GROSS WEIGHT	UNITS (K = KILOGRAM, P = POUND, T = TON)
1 8 0 0	K

11. ADDITIONAL DESCRIPTION OF PACKAGING AND PACKAGING MATERIALS

12. RADIONUCLIDE CONTENT: NUCLIDE	AMOUNT	±	UNITS (C = CURIE, M = GRAM)	ERROR ON AMOUNT	±	AMOUNT DETERMINED BY (A = ANALYSIS, M = MEASUREMENT, E = ESTIMATE)	SS MATERIALS WRITEOFF: ACCOUNT	PROJECT CODE
P U 5 2	5 9 8	E +0	M		E	M	741	309
P U 5 4	6 3	E -1	M		E	M	741	309
P U 4 2	0 6	E -1	M		E	M	741	309
		E			E			

WASTE GENERATOR — Signature certifies that waste is in accordance with all applicable disposal requirements.

H-1 AREA REPRESENTATIVE — Signature certifies that waste package or shipment is safe to handle and transport.

GROUP LEADER (AS NECESSARY)

13. DATE DISPOSED (M M D D Y Y)	14. DISPOSAL/STORAGE LOCATION: AREA	SHAFT	PIT	POST(S)	LAYER	POS.	15. SHAFT SURFACE DOSE MR/HR

10-79

H-7 WASTE MANAGEMENT REPRESENTATIVE _____

DISCARDABLE SOLIDS

[X] Leached [ ] N-Comb. [ ] Comb. [ ] PN

Seal # DCM-6789 Waste Code _____ Date _____

RSWD # _____ Project # 304 Transaction # _____

	Item #	Ident.	From Room Box	Net Wt. kg	Matrix	g Pu	%	MT	Generator Name	Waste Mgmt. Personnel	Auth. Pg/Ln	Date
X	1	JXFS-219-F1	G468	3.10	nitrate solids	0.52	6	52	C.S.	Dave	5/11	7/11
X	2	JXFS-220-F1	"	4.77	"	0.82	6	52	C.S		5/11	7/11
	3	V425A	"	1.65	"	0.26	12	54	C.S.		5/11	7/11
	4	JXFS-221-F1	"	3.40	"	0.50	6	52	R.M		5/11	7/12
	5	JXFS-222-F1	"	13.1	"	0.43	6	52	R.M		5/11	7/20
	6	JXFS-223-F1	"	6.4	"	0.30	6	52	D.S		5/11	7/21
	7	JXFS-224-F1	"	2.7	"	0.11	6	52	R.M		5/11	7/21
	8	JXFS-225-F1	"	13.7	"	1.50	6	52	R.M		5/11	7/22
	9	JXFS-226-F1	"	14.2	"	0	6	52	D.S		5/11	7/22
	10	JXFS-227-F1	"	10.5	"	1.8	6	52	R.M		5/11	7/2

MT	MASS SNM	NET WEIGHT	ACCOUNTABILITY CHECK
52	5.78 g	71.87 Kg	OK PFLASS
54	0.63 g	11.65 Kg	" "

Verified Value 6.67 g

Bulk Weight 180.0 Kg

CM11-COF-J

Page 272

DISCARDABLE SOLIDS

☒ Leached ☐ N-Comb. ☐ Comb. ☐ PN

Seal # DRM-6789 Waste Code WP Date

RSWD # 5087 Project # 309 Transaction #

Item #	Ident.	From Room Box	Net Wt. kg	Matrix	g Pu	%	MT	Generator Name	Waste Mgmt. Personnel	Auth. Pg/Ln	Date
1	IXFS-228-F1	6468	5.00	Metals & Soils	0.13	12	54	A.M	Dave	5/11	9/2
2	IXFS-228-R1	"	5.00	"	0.24	12	54	A.M	↓	5/11	9/2
3	IXFS-229-FA	"	28.00	"	0.06	95	42	A.M	↓	7/11	9/2
4											
5											
6											
7											
8											
9											
10											

MT	MASS SNM	NET WEIGHT	ACCOUNTABILITY CHECK
52, 54	see Page 1		
42	0.06 g	≈8.0 kg	

Verified Value

Bulk Weight

CMB11-COF-10

1 0 7 1 3 1 6

S805289

Radioactive Solid Waste Disposal Recor DrumID: 009263

18-Jul-96 **RSWD: S805289**

Old RSWD:

Date Sealed: 11/25/80

Origin of Waste

Group: CMB11

TA: 55

Building: PF4

Room: 432

Program Code:

Waste Code: A25

Waste Desc:

Gross Weight : 213.2 kg

Additional Description:

Initials: JT

Entry Date: 7/18/96

Re Entered 7/21/98

Discardable Waste Log Sheet

DrumID: 009263

Item#	ItemID	Net (kg)	Matrix	M Code	NM	MT	Auth	Remarks
1	IXFS-270-F1	12.68	NITRATE SALTS		0	52	5/11	
2	IXFS-271-F1	12.73	NITRATE SALTS		0	52	5/11	
3	IXFS-272-F1	17.94	NITRATE SALTS		0.17	52	5/11	
4	IXFS-273-F1	32.72	NITRATE SALTS		0.71	42	7/11	
5	IXFS-274-F1	29.54	NITRATE SALTS		0	52	5/11	
6	IXFS-275-F1	18.18	NITRATE SALTS		0	52	5/11	
7	IXFS-276-F1	16.36	NITRATE SALTS		0	52	5/11	
		140.15 kg						

LASL RADIOACTIVE SOLID WASTE DISPOSAL RECORD FORM

1. FORM NUMBER	2. DATE (M M D D Y Y)	3. RETRIEVABLE SERIAL NO.	4. ORIGIN OF WASTE: GROUP	TA	BLDG.	WING	ROOM	5. WASTE CODE
S 8 0 5289	1 1 2 5 8 0	0 0 9 2 6 3	C M B 1 1	5 5	P F 4		4 3 2	A 2 5

1 (1–8) — 1 (1–8) — (9–14) — (15–20) — (21–26) (26 27 28–32) (33) (34–37) — (38–40)

6. WASTE DESCRIPTION (41–80)

M = METER³
F = FEET³
G = GALLON

	7. NUMBERS OF WASTE PACKAGES: PLASTIC BAGS	CARD-BOARD BOXES	DRUMS NO.	DRUMS GAL.	WOODEN CRATES NO.	WOODEN CRATES VOLUME - ft³	8. GROSS VOLUME	UNITS	9. PACKAGE RADIATION AT: SURFACE MR/HR	1 METER MR/HR
2			1	55			2	M	2	1

1 (1–8) — (9–11) (12–14) — (15–17) (18–19) — (20–21) (22–26) — (27–30) (31) — (32–36) (37–41)

K = KILOGRAM
P = POUND
T = TON

10. GROSS WEIGHT	UNITS
2 1 3 2	K

(42–45) (46)

11. ADDITIONAL DESCRIPTION OF PACKAGING AND PACKAGING MATERIALS (47–80)

C = CURIE
M = GRAM

	12. RADIONUCLIDE CONTENT: NUCLIDE	AMOUNT	±	UNITS	ERROR ON AMOUNT	±	AMOUNT DETERMINED BY: (A = ANALYSIS, M = MEASUREMENT, E = ESTIMATE)	SS MATERIALS WRITEOFF: ACCOUNT	PROJECT CODE
3	PU 52	1 7	E −1	M		E	M	741	309
3	PU 42	7 1	E −1	M		E	M	741	309
3			E			E			
3			E			E			

1 (1–8) — (9–13) (14–20) (21) (22–28) (29)

A. MARTINEZ
WASTE GENERATOR
Signature certifies that waste is in accordance with all applicable disposal requirements.

H-1 AREA REPRESENTATIVE
Signature certifies that waste package or shipment is safe to handle and transport.

C. A[illegible]
GROUP LEADER (AS NECESSARY)

	13. DATE DISPOSED (M M D D Y Y)	14. DISPOSAL/STORAGE LOCATION: AREA	SHAFT	PIT	POST(S)	LAYER	POS.	15. SHAFT SURFACE DOSE MR/HR
4								

1 (1–8) — (9–14) — (15–16) (17–19) (20–21) (22–25) (26–27) (28) — (29–32)

10-79

H-7 WASTE MANAGEMENT REPRESENTATIVE _____

DISCARDABLE SOLIDS

[X] Leached [ ] N-Comb. [ ] Comb. [ ] PN

Seal # DRM-9263 Waste Code A25 Date

RSWD # 5289 Project # 309 Transaction #

Item #	Ident.	From Room Box	Net Wt. kg	Matrix	g Pu	%	MT	Generator Name	Waste Mgmt. Personnel	Auth. Pg/Ln	Date
1	IXFS-270-F1	4/68	12.18	nitrate salts	0	6	52			5/11	11/17
2	IXFS-271-F1	"	12.73	"	0	6	52			5/11	11/17
3	IXFS-272-F1	"	17.94	"	0.17	6	52			5/11	11/18
X 4	IXFS-273-F1	"	32.72	"	0.71	—	42			7/11	11/20
5	IXFS-274-F1	"	29.54	"	0	6	52			5/11	11/21
6	IXFS-275-F1	"	18.18	"	0	6	52			5/11	11/25
7	IXFS-276-F1	"	16.36	"	0	6	52			5/11	11/25
8											
9											
10											

MT	MASS SNM	NET WEIGHT	ACCOUNTABILITY CHECK
42	0.71 g	32.72 kg	OK PFLASS
52	0.17 g	107.43 kg	OK

Verified Value .88 g

Bulk Weight 213.18 Kg

CMB11-COF-108

S813385

1 9 7 2 0 5 7 1

Radioactive Solid Waste Disposal Recor

DrumID: 009884

26-Jul-96

RSWD: S813385

Old RSWD:

Date Sealed: 4/28/81

Origin of Waste

Group: CMB11

TA: 55

Building: PF4

Room: 432

Program Code:

Waste Code: A25

Waste Desc: LEACHED SOLIDS

Gross Weight : 200.4 kg

Additional Description:

Initials: JT

Entry Date: 7/26/96

Re-entered 7-22-96

Discardable Waste Log Sheet

DrumID: 009884

Item#	ItemID	Net (kg)	Matrix	M Code	NM	MT	Auth	Remarks
1	IXFS-347-F1	6	NITRATE SALTS		0	52	5/11	
2	IXFS-349-F1	15	NITRATE SALTS		0	52	5/11	
3	?	25.45	NITRATE SALTS		0	52	5/11	
4	IXFS-351-F1	17.27	NITRATE SALTS		34.04	52	5/11	
5	IXFS-?		NITRATE SALTS			52	5/11	
6	IXFS-354-F1	10.91	NITRATE SALTS		0	52	5/11	
7	IXFS-356-F1	29.09	NITRATE SALTS		10	52	5/11	
		103.72 kg						

1 2 7 2 0 6 7 3

PLEASE READ INSTRUCTIONS ON BACK CAREFULLY

1. FORM NUMBER: S 8 13385

LASL RADIOACTIVE SOLID WASTE DISPOSAL RECORD FORM

H-7 Waste Manage[illegible]
Ext 6095 MS 592

2. DATE (M M D D Y Y)	3. RETRIEVABLE SERIAL NO.	4. ORIGIN OF WASTE: GROUP	TA	BLDG.	WING	ROOM	5. WASTE CODE
042881	009884	CMB11	55	PF4	439	432	425

6. WASTE DESCRIPTION: Leached Solids

7. NUMBERS OF WASTE PACKAGES: PLASTIC BAGS	CARD BOARD BOXES	DRUMS NO	DRUMS GAL.	WOODEN CRATES NO.	WOODEN CRATES VOLUME-ft³
		1	55		

8. GROSS VOLUME	UNITS (M = METER³, F = FEET³, G = GALLON)
.2	M

9. PACKAGE RADIATION AT: SURFACE MR/HR	1 METER MR/HR

10. GROSS WEIGHT	UNITS (K = KILOGRAM, P = POUND, T = TON)
200.4	K

11. ADDITIONAL DESCRIPTION OF PACKAGING AND PACKAGING MATERIALS:

12. RADIONUCLIDE CONTENT: NUCLIDE	AMOUNT	±	UNITS (C = CURIE, M = GRAM)	ERROR ON AMOUNT	±	AMOUNT DETERMINED BY (A = ANALYSIS, M = MEASUREMENT, E = ESTIMATE)	88 MATERIALS WRITEOFF: ACCOUNT	PROJECT CODE
Pu 52	4857	E +1	M		E	M	741	309
		E			E			
		E			E			
		E			E			
		E			E			
		E			E			

Enrique Garcia — WASTE GENERATOR: Signature certifies that waste [illegible] applicable disposal requirements

Faye Hene — H-1 AREA REPRESENTATIVE: Signature certifies that waste package or shipment is safe to handle and transport. GROUP LEADER (AS NECESSARY)

13. DATE DISPOSED

14. DISPOSAL/STORAGE LOCATION: AREA	SHAFT	PIT	POST(S)	LAYER	POS.

15. SHAFT SURFACE DOSE MR/HR

H-7 WASTE MANAGEMENT REPRESENTATIVE

HS-E 7-1A(10-80)

DISCARDABLE SOLIDS

☒ Leached ☐ N-Comb. ☐ Comb. ☐ PN

Seal # DRM 9894 Waste Code A-25 NP Date

RSWD # 3385 Project # 307 Transaction #

Item #	Ident.	From Room Box	Net Wt. kg	Matrix	g Pu	%	MT	Generator Name	Waste Mgmt. Personnel	Auth. Pg/Ln	Date
1	TXFS 347 F1	468	[illegible]	Nitrate [illegible]	Ø	6	52	[illegible]	Rom	5 / 11	[illegible]
2	TXFS 349 F1	"	15.06	"	Ø	6	52	SSI		5 / 11	[illegible]
3	[illegible]		[illegible]	"	[illegible]		[illegible]			5 / 11	
4	TXFS 351-F1	"	12.27	"	34.64		[illegible]			5 / 11	[illegible]
5	TXFS-[illegible] F1		[illegible]	[illegible]	[illegible]	[illegible]	[illegible]	[illegible]		5 / 11	[illegible]
6	TXFS-354 F1	"	10.91	"	[illegible]	6	52	[illegible]		5 / 11	[illegible]
7	TXFS 356 [illegible]	"	24.09	"	10.0	6	52	SSI	!	5 / 11	[illegible]
8											
9											
10											

MT	MASS SNM	NET WEIGHT	ACCOUNTABILITY CHECK
52	48.52	122.36	OK PFCMSS

Verified Value 48.5 g

Bulk Weight 200.45 kg

CM11-COF-108

S813389

Radioactive Solid Waste Disposal Recor DrumID: 009886

26-Jul-96 **RSWD: S813389**

Old RSWD:

Date Sealed: 4/29/81

Origin of Waste

Group: CMB11

TA: 55

Building: PF4

Room: 432

Program Code:

Waste Code: A25

Waste Desc: LEACHED SOLIDS

Gross Weight : 185 kg

Additional Description:

Initials: JT

Entry Date: 7/26/96

re-entered 7-22-98

Discardable Waste Log Sheet

DrumID: 009886

Item#	ItemID	Net (kg)	Matrix	M Code	NM	MT	Auth	Remarks
1	IXFS-356-F1	64.41	NITRATE SALTS		24	52	5/11	
2	IXFS-357-F1	12.27	NITRATE SALTS		0	52	5/11	
3	IXFS-358-F1	21.36	NITRATE SALTS		0.81	42	5/11	
4	IXFS-359-F1	29.55	NITRATE SALTS		28.4	52	5/11	
		127.59 kg						

1 9 7 2 9 5 9 1

PLEASE READ INSTRUCTIONS ON BACK CAREFULLY

H-7 Waste Ma
Ext 6095 MS 502

LASL RADIOACTIVE SOLID WASTE DISPOSAL RECORD FORM

1. FORM NUMBER
S B 13989

2. DATE (M M D D Y Y)	3. RETRIEVABLE SERIAL NO.
04 29 81	009886

4. ORIGIN OF WASTE				
GROUP	TA	BLDG.	WING	ROOM
CMB11	55	Pf4		432

5. WASTE CODE
A25

6. WASTE DESCRIPTION

Leached solids

7. NUMBERS OF WASTE PACKAGES					
PLASTIC BAGS	CARD BOARD BOXES	DRUMS NO.	DRUMS GAL.	WOODEN CRATES NO.	WOODEN CRATES VOLUME ft³
		1	55		

8. GROSS VOLUME	UNITS
.2	M

M = METER³
F = FEET³
G = GALLON

9. PACKAGE RADIATION AT	
SURFACE MR/HR	1 METER MR/HR
2	0

10. GROSS WEIGHT	UNITS
185.0	K

K = KILOGRAM
P = POUND
T = TON

11. ADDITIONAL DESCRIPTION OF PACKAGING AND PACKAGING MATERIALS

12. RADIONUCLIDE CONTENT																			
NUCLIDE	AMOUNT		±	UNITS	ERROR ON AMOUNT		±	AMOUNT DETERMINED BY:		SS MATERIALS WRITEOFF	
																		ACCOUNT	PROJECT CODE
Pu 238	1	E	−1	M			E		M									741	309
Pu 239	240	E	+1	M			E		M									741	309
		I					E												
		L					E												
		I					E												
		I					E												

C = CURIE
M = GRAM

A = ANALYSIS
M = MEASUREMENT
E = ESTIMATE

Ronald T. Corbett
WASTE GENERATOR
Signature certifies that waste is in compliance with all applicable disposal requirements.

H-1 AREA REPRESENTATIVE
Signature certifies that waste package or shipment is safe to handle and transport.

Faye Hane
GROUP LEADER (AS NECESSARY)

13. DATE DISPOSED (M M D D Y Y)

14. DISPOSAL/STORAGE LOCATION					
AREA	SHAFT	PIT	POST(S)	LAYER	SQS

15. SHAFT SURFACE DOSE
MR/HR

H-7 WASTE MANAGEMENT REPRESENTATIVE

HS-E 7-1A(10-80)

DISCARDABLE SOLIDS

[X] Leached [ ] N-Comb. [ ] Comb. [ ] PN

Seal # DRA 9886 Waste Code A-25 Date

RSWD # 3389 Project # 309 Transaction #

Item #	Ident.	From Room Box	Net Wt. kg	Matrix	g Pu	%	MT	Generator Name	Waste Mgmt. Personnel	Auth. Pg/Ln	Date
1	[illegible]	468	[illegible]	[illegible]	24.0	[illegible]	[illegible]	[illegible]	[illegible]	5 / "	[illegible]
2	[illegible]	"	12.27	"	0	6	[illegible]	[illegible]		5 /	
3	[illegible]	"	21.36	"	.81	94.75	[illegible]	[illegible]		5 / "	[illegible]
4	ZXFs 359 F1	"	39.55	"	284	6	52	QAS	✓	5 / "	[illegible]
5										/	
6										/	
7										/	
8										/	
9										/	
10										/	

MT	MASS SNM	NET WEIGHT
42	0.81 g	21.36 Kg
52	52.40 g	106.23 Kg

ACCOUNTABILITY CHECK OK/PASS

Verified Value

Bulk Weight 185

CMB11-COF-10E

S813545

Radioactive Solid Waste Disposal Recor

DrumID: 008808

27-Jul-96

RSWD: S813545

Old RSWD:

Date Sealed: 1/22/81

Origin of Waste

Group: CMB11

TA: 55

Building: PF2

Room: 432

Program Code:

Waste Code: A25

Waste Desc: LEACHED SOLIDS

Gross Weight : 190 kg

Additional Description:

Initials: JT

Entry Date: 7/27/96

7/14/98

Discardable Waste Log Sheet

DrumID: 008808

Item#	ItemID	Net (kg)	Matrix	M Code	NM	MT	Auth	Remarks
1	IXFS-298-F1	23	NITRATE SALTS		5.32	52	5/11	
2	IXFS-299-F1	12.5	NITRATE SALTS		1.25	52	5/11	
3	IXFS-300-F1	7.27	NITRATE SALTS		2.1	52	5/11	
4	IXFS-301-F1	10.91	NITRATE SALTS		2.4	52	5/11	
5	IXFS-302-F1	5	NITRATE SALTS		0.47	52	5/11	
6	IXFS-303-F1	13.86	NITRATE SALTS		0	52	5/11	
7	IXFS-304-F1	6.14	NITRATE SALTS		0.6	52	5/11	
		78.68 kg						

PLEASE READ INSTRUCTIONS ON BACK CAREFULLY

LASL RADIOACTIVE SOLID WASTE DISPOSAL RECORD FORM

H-7 W[redacted]ment
Ext [redacted]

1. FORM NUMBER
S 8 13545

2. DATE (M M D D Y Y)	3. RETRIEVABLE SERIAL NO.
012281	008808

4. ORIGIN OF WASTE					5. WASTE CODE
GROUP	TA	BLDG.	WING	ROOM	
CMB11	55	PF2	468	432	A25

6. WASTE DESCRIPTION: Leached Solids

7. NUMBERS OF WASTE PACKAGES						8. GROSS VOLUME	UNITS (M = METER^3, F = FEET^3, G = GALLON)	9. PACKAGE RADIATION AT:	
PLASTIC BAGS	CARD BOARD BOXES	DRUMS NO.	DRUMS GAL.	WOODEN CRATES NO.	WOODEN CRATES VOLUME ft^3			SURFACE MR/HR	1 METER MR/HR
		1	55			.2	M	0	0

10. GROSS WEIGHT	UNITS (K = KILOGRAM, P = POUND, T = TON)	11. ADDITIONAL DESCRIPTION OF PACKAGING AND PACKAGING MATERIALS
1900	K	

12. RADIONUCLIDE CONTENT				UNITS (C = CURIE, M = GRAM)				AMOUNT DETERMINED BY: (A = ANALYSIS, M = MEASUREMENT, E = ESTIMATE)	SS MATERIALS WRITEOFF	
NUCLIDE	AMOUNT		±		ERROR ON AMOUNT		±		ACCOUNT	PROJECT CODE
Pu 52	1.214	E	+1	M		E		M	741	309
		E				E				
		E				E				
		E				E				
		E				E				
		E				E				

WASTE GENERATOR — Signature certifies that waste is in accordance with all applicable disposal requirements.

H-1 AREA REPRESENTATIVE — Signature certifies that waste package or shipment is safe to handle and transport.

GROUP LEADER (AS NECESSARY)

13. DATE DISPOSED (M M D D Y Y)

14. DISPOSAL/STORAGE LOCATION					
AREA	SHAFT	PIT	POST(S)	LAYER	POS.

15. SHAFT SURFACE DOSE
MR/HR

H-7 WASTE MANAGEMENT REPRESENTATIVE _____

HS-E 7-1A(10/80)

DISCARDABLE SOLIDS

[X] Leached [ ] N-Comb. [ ] Comb. [ ] PN

Seal # DRM- 8808 Waste Code A25 WP Date

RSWD # 3545 Project # 309 Transaction #

	Item #	Ident.	From Room Box	Net Wt. kg	Matrix	g Pu	%	MT	Generator Name	Waste Mgmt. Personnel	Auth. Pg/Ln	Date
X	1	IXFS-298-F1	468	23.00	nitrate [illegible]	5.32	6	52	A.M		5/11	1/15
X	2	IXFS-299-F1	468	12.50	"	1.25	6	52	A.M		5/11	1/15
X	3	IXFS-300-F1	468	7.27	"	2.10	6	52	A.M		5/11	1/15
X	4	IXFS-301-F1	"	10.91	"	2.40	6	52	A M		5/11	1/20
	5	IXFS-302-F1	"	5.00	"	0.47	6	52	A.M		5/11	1/20
	6	IXFS-303-F1	"	13.86	"	0.00	6	52	BJP		5/11	1/21
X	7	IXFS-304-F1	"	6.14	"	0.60	6	52	BJP		5/11	1/21
	8											
	9											
	10											

MT	MASS SNM	NET WEIGHT	ACCOUNTABILITY CHECK
52	12.14g	78.68Kg	OK PFLASS

Verified Value 12.14

Bulk Weight 190 Kg

CMB11-COF-10

S816434

1 7 7 2 1 1 9 1

Radioactive Solid Waste Disposal Record DrumID: 010094

10-Jul-95

RSWD: ~~16434~~ 5816434

Old RSWD:

Date Sealed: 7/27/81

Origin of Waste

Group: CMB11

TA: 55

Building: PF 4

Room: 432

Program Code:

Waste Code: A25

Waste Desc: LEACHED SOLIDS

Gross Weight : 215.9 kg

Additional Description:

Initials: SB

Entry Date: 6/21/95

Discardable Waste Log Sheet

DrumID: 010094

Item#	ItemID	Net (kg)	Matrix	M Code	NM	MT	Auth	Remarks
1	IXFS 400 F1	87.27	NITRATE SALTS		2.87	52	5/11	
2	IXFS 401 F1	30.88	NITRATE SALTS		15.75	52	5/11	
3	IXFS 402 F1	13.86	NITRATE SALTS		13.73	52	5/11	
4	IXFS 403 F1	18.18	NITRATE SALTS		8.82	52	5/11	
		150.19 kg						

1 2 7 2 1 1 2 1

PLEASE READ INSTRUCTIONS ON BACK CAREFULLY

1. FORM NUMBER
S 8 16434

LASL RADIOACTIVE SOLID WASTE DISPOSAL RECORD FORM

H-7 Waste Management
Ext 6095 MS-592

2. DATE (M M D D Y Y)	3. RETRIEVABLE SERIAL NO.	4. ORIGIN OF WASTE: GROUP	TA	BLDG.	WING	ROOM	5. WASTE CODE
0 7 2 7 8 1	0 1 0 0 9 4	CMB 11	55	PF4		432	A25

6. WASTE DESCRIPTION
Leached Solids

7. NUMBERS OF WASTE PACKAGES: PLASTIC BAGS	CARD BOARD BOXES	DRUMS NO.	DRUMS GAL.	WOODEN CRATES NO.	WOODEN CRATES VOLUME ft³
		1	55		

8. GROSS VOLUME	UNITS (M = METER³, F = FEET³, G = GALLON)
2	M

9. PACKAGE RADIATION AT: SURFACE MR/HR	1 METER MR/HR
2	0

10. GROSS WEIGHT	UNITS (K = KILOGRAM, P = POUND, T = TON)
21 59	K

11. ADDITIONAL DESCRIPTION OF PACKAGING AND PACKAGING MATERIALS

12. RADIONUCLIDE CONTENT: NUCLIDE	AMOUNT	±	UNITS (C = CURIE, M = GRAM)	ERROR ON AMOUNT	±	AMOUNT DETERMINED BY (A = ANALYSIS, M = MEASUREMENT, E = ESTIMATE)	SS MATERIALS WRITEOFF: ACCOUNT	PROJECT CODE
Pu 52	41.17	E +1	M	1	E	M	741	309
		E			E			
		E			E			
		E			E			
		E			E			
		E			E			

R. Lowborough
WASTE GENERATOR
Signature certifies that waste is in accordance with all applicable disposal requirements.

M
H-1 AREA REPRESENTATIVE
Signature certifies that waste package or shipment is safe to handle and transport.

Faye Hall RIC
~~GROUP LEADER (AS NECESSARY)~~

13. DATE DISPOSED (M M D D Y Y)

14. DISPOSAL/STORAGE LOCATION: AREA	SHAFT	PIT	POST(S)	LAYER	POS.

15. SHAFT SURFACE DOSE MR/HR

H-7 WASTE MANAGEMENT REPRESENTATIVE _____

HS-E 7-1A(10/80)

DISCARDABLE SOLIDS

☑ Leached ☐ N-Comb. ☐ Comb. ☐ PN

Seal # DRM-10094 Waste Code A-25 Date

RSWD # 6434 Project # 309 Transaction #

Item #	Ident.	From Room Box	Net Wt. kg	Matrix	g Pu	%	MT	Generator Name	Waste Mgmt. Personnel	Auth. Pg/Ln	Date
1	IXFS-400-F1	465	87.27	NITRATE SALTS	2.87	6	52	RJP	ArCa	5/41	7/14/81
2	IXFS-401-F1	465	30.88	"	15.75	"	"	RJP	"	5/11	7/15/81
3	IXFS-402-F1	"	13.86	"	13.73	6	52	CHS	"	5/11	7/15/81
4	IXFS-403-F1	"	18.18	"	8.82	6	52	AIM	"	5/11	7/17/81
5											
6											
7											
8											
9											
10											

MT	MASS SNM	NET WEIGHT	ACCOUNTABILITY CHECK
52	41.17 g	150.19 Kg	OK/PF-LASS

Verified Value 41.17 g

Bulk Weight 215.91 Kg

shipped 7/24/81 [illegible]

CHB11-C

S816810

Discardable Waste Log Sheet

DrumID: 010934

Item#	ItemID	Net (kg)	Matrix	M Code	NM	MT	Auth	Remarks
1	IXFS-430-F1	15	NITRATE SALTS		9.25	53	5/11	
2	IXFS-431-F1	65.91	NITRATE SALTS		10.31	52	5/11	
3	IXFS-432-FA	52.05	NITRATE SALTS		4.57	52	5/11	
		132.96 kg						

PLEASE READ INSTRUCTIONS ON BACK CAREFULLY

1. FORM NUMBER
S, 8, 16810

LASL RADIOACTIVE SOLID WASTE DISPOSAL RECORD FORM

H-7 Waste Management
Ext 6095 MS-592

2. DATE (M M D D Y Y)	3. RETRIEVABLE SERIAL NO.	4. ORIGIN OF WASTE					5. WASTE CODE
		GROUP	TA	BLDG.	WING	ROOM	
092281	010934	CMB11	55	PF4		432	A25

6. WASTE DESCRIPTION: Leached Solids

7. NUMBERS OF WASTE PACKAGES					
PLASTIC BAGS	CARD BOARD BOXES	DRUMS NO.	DRUMS GAL.	WOODEN CRATES NO.	WOODEN CRATES VOLUME-ft³
		1	55		

8. GROSS VOLUME	UNITS (M = METER³, F = FEET³, G = GALLON)
2	M

9. PACKAGE RADIATION AT 1
SURFACE MR/HR	1 METER MR/HR
1	0

10. GROSS WEIGHT	UNITS (K = KILOGRAM, P = POUND, T = TON)
231.8	K

11. ADDITIONAL DESCRIPTION OF PACKAGING AND PACKAGING MATERIALS

12. RADIONUCLIDE CONTENT				UNITS (C = CURIE, M = GRAM)				AMOUNT DETERMINED BY: (A = ANALYSIS, M = MEASUREMENT, E = ESTIMATE)	SS MATERIALS WRITEOFF	
NUCLIDE	AMOUNT		±		ERROR ON AMOUNT		±		ACCOUNT	PROJECT CODE
Pu 52	1.488	E	+1	M		E		M	741	309
Pu 53	9	E	+0	M		E		M	741	309
		E				E				
		E				E				
		E				E				
		E				E				

A. Scarborough
WASTE GENERATOR
Signature certifies that waste is in accordance with all applicable disposal requirements.

H-1 AREA REPRESENTATIVE
Signature certifies that waste package or shipment is safe to handle and transport.

Faye Hume
~~GROUP LEADER (AS NECESSARY)~~

13. DATE DISPOSED (M M D D Y Y)

14. DISPOSAL/STORAGE LOCATION					
AREA	SHAFT	PIT	POST(S)	LAYER	POS.

15. SHAFT SURFACE DOSE
MR/HR

H-7 WASTE MANAGEMENT REPRESENTATIVE

HS-E 7-1A(10/80)

DISCARDABLE SOLIDS

[X] Leached [ ] N-Comb. [ ] Comb. [ ] PN

Seal # DRM 10934 Waste Code A-25 Date

RSWD # 6810 Project # 309 Transaction #

Item #	Ident.	From Room Box	Net Wt. kg	Matrix	g Pu	%	MT	Generator Name	Waste Mgmt. Personnel	Auth. Pg/Ln	Date
1	IXFS-430-F1	G468	15.0	NITRATE SALTS	9.25	8	53	[illegible]	[illegible]	5/11	9/10/81
2	IXFS431F1	G468	65.91	" "	10.31	6	52	[illegible]	↓	5/11	9/11/81
3	IXFS432FA	G468	52.05	" "	4.57	6	52	[illegible]		5/11	9/14/81
4										11	
5											
6											
7											
8											
9											
10											

MT	MASS SNM	NET WEIGHT	ACCOUNTABILITY CHECK
53	9.25 g	15.0 Kg	OK PF/LASS
52	14.88 g	117.96 Kg	

Verified Value —

Bulk Weight 231.8 Kg

CB11-COF

S818435

Radioactive Solid Waste Disposal Recor

DrumID: 011377

04-Aug-96

RSWD: S818435

Old RSWD:

Date Sealed: 12/16/81

Origin of Waste

Group: CMB11

TA: 55

Building: PF4

Room: 432

Program Code:

Waste Code: A26

Waste Desc: LEACHED SOLIDS

Gross Weight : 159.1 kg

Additional Description:

Initials: CG

Entry Date: 8/8/96

Discardable Waste Log Sheet

DrumID: 011377

Item#	ItemID	Net (kg)	Matrix	M Code	NM	MT	Auth	Remarks
1	IXFS-469-F1	15	NITRATE SALTS		0.79	52	5/11	
2	IXFS-470-F1	10.45	NITRATE SALTS		4.31	52	5/11	
3	IXFS-466-F1	5.68	NITRATE SALTS		3.36	52	5/11	
4	IXFS-471-F1	30	NITRATE SALTS		5.74	52	5/11	
5	IXFS-472-F1	12.3	NITRATE SALTS		0.003	42	5/11	
6	IXFS-473-FA	18.4	NITRATE SALTS		7.38	52	5/11	
		91.83 kg						

PLEASE READ INSTRUCTIONS ON BACK CAREFULLY

H-7 Waste Management
Ext 6095 MS-592

LASL RADIOACTIVE SOLID WASTE DISPOSAL RECORD FORM

1. FORM NUMBER	2. DATE (M M D D Y Y)	3. RETRIEVABLE SERIAL NO.	4. ORIGIN OF WASTE: GROUP	TA	BLDG.	WING	ROOM	5. WASTE CODE
S 818435	121681	613777	CMB11	55	PF4		432	A26

6. WASTE DESCRIPTION
Leached Solids

7. NUMBERS OF WASTE PACKAGES: PLASTIC BAGS	CARD-BOARD BOXES	DRUMS NO.	DRUMS GAL.	WOODEN CRATES NO.	WOODEN CRATES VOLUME - ft³	8. GROSS VOLUME (M = METER³, F = FEET³, G = GALLON)	UNITS	9. PACKAGE RADIATION AT: SURFACE MR/HR	1 METER MR/HR
			1	55		7	M	2	1

10. GROSS WEIGHT	UNITS (K = KILOGRAM, P = POUND, T = TON)	11. ADDITIONAL DESCRIPTION OF PACKAGING AND PACKAGING MATERIALS
1591	K	

12. RADIONUCLIDE CONTENT: NUCLIDE	AMOUNT	±	UNITS (C = CURIE, M = GRAM)	ERROR ON AMOUNT	±	AMOUNT DETERMINED BY (A = ANALYSIS, M = MEASUREMENT, E = ESTIMATE)	SS MATERIALS WRITEOFF: ACCOUNT	PROJECT CODE
Pu 242		E +0	M		E	M	741	309
Pu 5225		E +1	M		E	M	741	309
		E			E			
		E			E			

WASTE GENERATOR
Signature certifies that waste is in accordance with all applicable disposal requirements.

H-1 AREA REPRESENTATIVE
Signature certifies that waste package or shipment is safe to handle and transport.

Gayo Hsue
~~GROUP LEADER (IF NECESSARY)~~
AS

13. DATE DISPOSED (M M D D Y Y)	14. DISPOSAL/STORAGE LOCATION: AREA	SHAFT	PIT	POST(S)	LAYER	POS.	15. SHAFT SURFACE DOSE MR/HR

4-80

H-7 WASTE MANAGEMENT REPRESENTATIVE _____

DISCARDABLE SOLIDS

☑ Leached ☐ N-Comb. ☐ Comb. ☐ PN

Seal # DRM 11377 Waste Code WP A-26 Date _____

RSWD # 8435 Project # 307 Transaction # _____

Item #	Ident.	From Room Box	Net Wt. kg	Matrix	g Pu	%	MT	Generator Name	Waste Mgmt. Personnel	Auth. Pg/Ln	Date
1	IXFS-469-F1	G468	15	Nitrate Salts	0.79	6	52	RP	Ar/a	5/11	11/30/6
2	IXFS-470-F1	G468	10.45	Nitrate Salts	4.31	6	52	RP/JT		5/11	12/1/5
3	IXFS-4[illegible]-F1	G468	[illegible]	Nitrate Salts	3.36	6	52	RP/JT CS		5/11	12/1/[illegible]
4	IXFS 471 F1	G468	30.00 kg	" "	5.74	6	52	a		5/11	12/[illegible]
5	IXFS 472 F1	"	12.3 kg	" "	0.003	82.1	42	[illegible]		5/[illegible]	[illegible]
6	IXFS 473 F A	G468	[illegible]	" "	7.38	6	52	a		5/11	[illegible]
7											
8											
9											
10											

MT	MASS SNM	NET WEIGHT
42	0.003 g	12.3 Kg
52	21.58 g	79.54 Kg

ACCOUNTABILITY CHECK OK/PRCAS

Verified Value _____

Bulk Weight 157.10 Kg

S822599

Radioactive Solid Waste Disposal Record DrumID: 011323

13-Dec-95 RSWD: ~~2599~~ S822599

Old RSWD:

Date Sealed: 1/8/82

Origin of Waste

Group: CMB11

TA: 55

Building: PF 4

Room: 432

Program Code:

Waste Code: A26

Waste Desc: LEACHED SOLIDS

Gross Weight : 197.3 kg

Additional Description: NITRATE SALTS

Initials: SB

Entry Date: 12/13/95

Discardable Waste Log Sheet

DrumID: 011323

Item#	ItemID	Net (kg)	Matrix	M Code	NM	MT	Auth	Remarks
1	IXFS 487 FB	22.05	NITRATE SALTS		8.73	52	5/11	
2	IXFS 488 F1	2.05	NITRATE SALTS		6.98	52	5/11	
3	IXFS 488 OX	16.59	NITRATE SALTS		0	52	5/11	
4	IXFS 489 F1	15	NITRATE SALTS		18.75	52	5/11	
5	IXFS 490 F1	36.51	NITRATE SALTS		16.19	52	5/11	
6	IXFS 491 F1	31.59	NITRATE SALTS		11.46	52	5/11	
		123.79 kg						

PLEASE READ INSTRUCTIONS ON BACK CAREFULLY

LOS ALAMOS RADIOACTIVE SOLID WASTE DISPOSAL RECORD FORM

H 7 W[illegible]
Ext 60[illegible]

1. FORM NUMBER
S 8 2 2599

2. DATE (M M D D Y Y)	3. RETRIEVABLE SERIAL NO.
01 08 82	01 1323

4. ORIGIN OF WASTE					5. WASTE CODE
GROUP	TA	BLDG.	WING	ROOM	
CMB11	55	PF4		432	A26

6. WASTE DESCRIPTION: Leached Solids

7. NUMBERS OF WASTE PACKAGES					
PLASTIC BAGS	CARD BOARD BOXES	DRUMS NO.	DRUMS GAL.	WOODEN CRATES NO.	WOODEN CRATES VOLUME-ft³
		1	55		

8. GROSS VOLUME	UNITS (M = METER³, F = FEET³, G = GALLON)
.2	M

9. PACKAGE RADIATION AT:	
SURFACE MR/HR	1 METER MR/HR
7	1

10. GROSS WEIGHT	UNITS (K = KILOGRAM, P = POUND, T = TON)
1,973	K

11. ADDITIONAL DESCRIPTION OF PACKAGING AND PACKAGING MATERIALS: Nitrate Salts

12. RADIONUCLIDE CONTENT				UNITS (C = CURIE, M = GRAM)				AMOUNT DETERMINED BY: (A = ANALYSIS, M = MEASUREMENT, E = ESTIMATE)	SS MATERIALS WRITEOFF	
NUCLIDE	AMOUNT		±		ERROR ON AMOUNT		±		ACCOUNT	PROJECT CODE
Pu 52602		E	+1	M		E		M	741	309
		E				E				
		E				E				
		E				E				
		E				E				
		E				E				

WASTE GENERATOR
Signature certifies that waste is in accordance with all applicable disposal requirements.

H-1 AREA REPRESENTATIVE
Signature certifies that waste package or shipment is safe to handle and transport.

Gaye Hsue
GROUP LEADER (AS NEGOTIATED)
AS

13. DATE DISPOSED (M M D D Y Y)

14. DISPOSAL/STORAGE LOCATION					
AREA	SHAFT	PIT	POST(S)	LAYER	POS.

15. SHAFT SURFACE DOSE
MR/HR

H-7 WASTE MANAGEMENT REPRESENTATIVE

HS-E 7-1A (10/81)

DISCARDABLE SOLIDS

☑ Leached ☐ N-Comb. ☐ Comb. ☐ PN

Seal # DRM- 11323 Waste Code 426 Date _____

RSWD # 2599 Project # 301 Transaction # _____

Item #	Ident.	From Room Box	Net Wt. kg	Matrix	g Pu	%	NT	Generator Name	Waste Mgmt. Personnel	Auth. Pg/Ln	Date
1	TXFS-487-FB	G468	22.05	[illegible]	8.73	6	52	CR	fratty	5/11	12/21
2	TXFS-488-F1	"	2.05	"	6.98	6	52	CR		5/11	12/21
3	TXFS-488-OX	"	16.59	"	Ø	6	52	DL		5/11	12/21
4	TXFS-489-F1	"	15.00	"	18.75	6	52	JM		5/11	12/30
5	TXFS-490-F1	"	36.51	"	16.19	6	52	CRS		5/11	12/31
6	TXFS-491-F1	"	31.59	"	11.46	6	52	CR		5/11	12/32
7											
8											
9											
10											

NT	MASS SNM	NET WEIGHT	ACCOUNTABILITY CHECK
52	62.11g	124.09Kg	OK/PrhdSS

Verified Value _____

Bulk Weight [illegible]

CB11

S822713

Radioactive Solid Waste Disposal Record DrumID: 011374

13-Dec-95 RSWD: ~~2713~~ 5822713

Old RSWD:

Date Sealed: 1/26/82

Origin of Waste

Group: CMB11

TA: 55

Building: PF 4

Room: 432

Program Code:

Waste Code: A25

Waste Desc: LEACHED SOLIDS

Gross Weight : 236.4 kg

Additional Description: FROM 434

Initials: SB

Entry Date: 12/13/95

Discardable Waste Log Sheet

DrumID: 011374

Item#	ItemID	Net (kg)	Matrix	M Code	NM	MT	Auth	Remarks
1	IXFS 497 FB	10.9	NITRATE SALTS		0.63	54	5/11	
2	IXFS 498 F1	9.55	NITRATE SALTS		0.63	52	5/11	
3	IXF 499 OX4	20.68	NITRATE SALTS		1.26	52	5/11	
4	IXFS 500 F1	17.5	NITRATE SALTS		2.85	52	5/11	
5	IXFS 501 F1	39.32	NITRATE SALTS		5.77	54	5/11	
6	IXFS 502 F1	16.59	NITRATE SALTS		1.33	52	5/11	
		114.54 kg						

1950 0207

COPY

PLEASE READ INSTRUCTIONS ON BACK CAREFULLY

LOS ALAMOS RADIOACTIVE SOLID WASTE DISPOSAL RECORD FORM

H-7 Waste Management
Ext 6095 MS-592

1. FORM NUMBER
S 8 2 2713

2. DATE (M M D D Y Y)	3. RETRIEVABLE SERIAL NO.	4. ORIGIN OF WASTE: GROUP	TA	BLDG.	WING	ROOM	5. WASTE CODE
01 26 82	01 13 74	CMB11	55	PF4		432	A25

6. WASTE DESCRIPTION: Leached Solids

7. NUMBERS OF WASTE PACKAGES: PLASTIC BAGS	CARD BOARD BOXES	DRUMS NO.	DRUMS GAL.	WOODEN CRATES NO.	WOODEN CRATES VOLUME-ft³
			55		

8. GROSS VOLUME	UNITS (M = METER³, F = FEET³, G = GALLON)
2	M

9. PACKAGE RADIATION AT: SURFACE MR/HR	1 METER MR/HR
120	2

10. GROSS WEIGHT	UNITS (K = KILOGRAM, P = POUND, T = TON)
236.4	K

11. ADDITIONAL DESCRIPTION OF PACKAGING AND PACKAGING MATERIALS: From 434

12. RADIONUCLIDE CONTENT: NUCLIDE	AMOUNT	±	UNITS (C = CURIE, M = GRAM)	ERROR ON AMOUNT	±	AMOUNT DETERMINED BY (A = ANALYSIS, M = MEASUREMENT, E = ESTIMATE)	SS MATERIALS WRITEOFF: ACCOUNT	PROJECT CODE
Pu 52	6.000	E +0	m		E	m	741	309
Pu 54	6	E +0	m		E	m	741	309
Am 241		E	m		E	m	741	309
		E			E			
		E			E			
		E			E			

Espinoza
WASTE GENERATOR
Signature certifies that waste is in accordance with all applicable disposal requirements.

AREA REPRESENTATIVE
Signature certifies that waste package or shipment is safe to handle and transport.

Gayle Nsue
~~GROUP LEADER (AS NECESSARY)~~
AS

13. DATE DISPOSED (M M D D Y Y)

14. DISPOSAL/STORAGE LOCATION: AREA	SHAFT	PIT	POST(S)	LAYER	S.O.S.

15. SHAFT SURFACE DOSE MR/HR

H-7 WASTE MANAGEMENT REPRESENTATIVE

HS-E 7-1A (10/81)

1 9 7 9 0 2 0 8

PLEASE READ INSTRUCTIONS ON BACK CAREFULLY

LOS ALAMOS RADIOACTIVE SOLID WASTE DISPOSAL RECORD FORM

H-7 Waste Management
Ext 6095 MS-592

1. FORM NUMBER
S 8 2 2713

2. DATE (M M D D Y Y)	3. RETRIEVABLE SERIAL NO.	4. ORIGIN OF WASTE: GROUP	TA	BLDG.	WING	ROOM	5. WASTE CODE
01 26 82	01 13 74	CMB11	55	PF4		432	A25

6. WASTE DESCRIPTION: Leached Solids

7. NUMBERS OF WASTE PACKAGES

PLASTIC BAGS	CARD BOARD BOXES	DRUMS NO.	DRUMS GAL.	WOODEN CRATES NO.	WOODEN CRATES VOLUME-ft³
		1	55		

8. GROSS VOLUME: 2 m (UNITS: M = METER³, F = FEET³, G = GALLON)

9. PACKAGE RADIATION AT:

SURFACE MR/HR	1 METER MR/HR
120	2

10. GROSS WEIGHT: 2364 K (UNITS: K = KILOGRAM, P = POUND, T = TON)

11. ADDITIONAL DESCRIPTION OF PACKAGING AND PACKAGING MATERIALS: From 434

12. RADIONUCLIDE CONTENT (UNITS: C = CURIE, M = GRAM; AMOUNT DETERMINED BY: A = ANALYSIS, M = MEASUREMENT, E = ESTIMATE)

NUCLIDE	AMOUNT	±	UNITS	ERROR ON AMOUNT	±		SS MATERIALS WRITEOFF ACCOUNT	PROJECT CODE
Pu 526		E	+10 m		E	m	741	309
Pu 546		E	+10 m		E	m	741	309
Am 241		E	m		E	m	741	309
		E			E			
		E			E			
		E			E			

Espinoza — WASTE GENERATOR
Signature certifies that waste is in accordance with all applicable disposal requirements.

H-1 AREA REPRESENTATIVE
Signature certifies that waste package or shipment is safe to handle and transport.

Gayle Nsue — GROUP LEADER (AS NECESSARY)
AS

13. DATE DISPOSED (M M D D Y Y)

14. DISPOSAL/STORAGE LOCATION: AREA	SHAFT	PIT	POST(S)	LAYER	POS.

15. SHAFT SURFACE DOSE MR/HR

H-7 WASTE MANAGEMENT REPRESENTATIVE

HS-E 7-1A (10/81)

DISCARDABLE SOLIDS

☑ Leached ☐ N-Comb. ☐ Comb. ☐ PN

Seal # DRM-11374 Waste Code A-25 WP Date

RSWD # 2713 Project # 309 Transaction #

Item #	Ident.	From Room Box	Net Wt. kg	Matrix	g Pu	%	MT	Generator Name	Waste Mgmt. Personnel	Auth. Pg/Ln	Date
1	IXFS-497-FB	G468	12.9	nitrate salts	0.63	12	54	CR	Apae	5/11	1/14
2	IXFS-498-F1	"	9.55	"	0.63	6	52	CR		5/11	1/15
3	IXF-499OX4	"	20.68	"	1.26	6	52	CR		5/11	1/19
4	IXFS-500-F1	"	17.50	"	2.85	6	52	CR		5/11	1/20
5	IXFS-501-F1	"	39.32	"	5.77	12	54	CR		5/11	1/21
6	IXFS-502-F1	"	16.59	"	1.33	6	52	CR		5/11	1/22
7											
8											
9											
10											

MT	MASS SNM	NET WEIGHT
52	6.07 g	64.32 kg
54	6.40 g	50.22 kg

ACCOUNTABILITY CHECK OK/PF/LASS

Verified Value

Bulk Weight 236.36 Kg

CM11-COF-1

S822844

Radioactive Solid Waste Disposal Record DrumID: 011326

13-Dec-95 RSWD: 2844 S822844

Old RSWD:

Date Sealed: 2/22/82

Origin of Waste

Group: CMB11

TA: 55

Building: PF 4

Room: 432

Program Code:

Waste Code: A26

Waste Desc: LEACHED SOLIDS

Gross Weight : 218.1 kg

Additional Description:

Initials: SB

Entry Date: 12/13/95

Discardable Waste Log Sheet

DrumID: 011326

Item#	ItemID	Net (kg)	Matrix	M Code	NM	MT	Auth	Remarks
1	IXFS 510 FB	75.22	NITRATE SALTS		87.47	52	5/11	
2	IXFS 511 F1	51.36	NITRATE SALTS		12.71	52	5/11	
3	IXFS 512 FA	20.45	NITRATE SALTS		1.23	54	5/11	
		147.03 kg						

PLEASE READ INSTRUCTIONS ON BACK CAREFULLY

LOS ALAMOS RADIOACTIVE SOLID WASTE DISPOSAL RECORD FORM

H-7 Waste Management
Ext 6095 MS-592

1. FORM NUMBER
S 8 2 2814

2. DATE (M M D D Y Y)	3. RETRIEVABLE SERIAL NO.	4. ORIGIN OF WASTE: GROUP	TA	BLDG.	WING	ROOM	5. WASTE CODE
02 22 82	01 13 26	CMB11	55	PF4		432	A26

6. WASTE DESCRIPTION: Leached Solids

7. NUMBERS OF WASTE PACKAGES: PLASTIC BAGS	CARD BOARD BOXES	DRUMS NO.	DRUMS GAL.	WOODEN CRATES NO.	WOODEN CRATES VOLUME-ft³
		1	55		

8. GROSS VOLUME	UNITS (M = METER³, F = FEET³, G = GALLON)
.2	M

9. PACKAGE RADIATION AT: SURFACE MR/HR	1 METER MR/HR
1.5	1.0

10. GROSS WEIGHT	UNITS (K = KILOGRAM, P = POUND, T = TON)
2181	K

11. ADDITIONAL DESCRIPTION OF PACKAGING AND PACKAGING MATERIALS:

12. RADIONUCLIDE CONTENT: NUCLIDE	AMOUNT		±	UNITS (C = CURIE, M = GRAM)	ERROR ON AMOUNT		±	AMOUNT DETERMINED BY (A = ANALYSIS, M = MEASUREMENT, E = ESTIMATE)	SS MATERIALS WRITEOFF: ACCOUNT	PROJECT CODE
Pu 52	1001	E	+2	M		E		M	741	309
Pu 54	123	E	+0	M		E		M	741	309
		E				E				
		E				E				
		E				E				
		E				E				

WASTE GENERATOR — Signature certifies that waste is in accordance with all applicable disposal requirements.

H-1 AREA REPRESENTATIVE — Signature certifies that waste package or shipment is safe to handle and transport.

~~GROUP LEADER (AS NECESSARY)~~

13. DATE DISPOSED (M M D D Y Y)

14. DISPOSAL/STORAGE LOCATION: AREA	SHAFT	PIT	POST(S)	LAYER	POS.

15. SHAFT SURFACE DOSE MR/HR

H-7 WASTE MANAGEMENT REPRESENTATIVE

HS-E 7-1A (10/81)

Leached | N-Comb. | Comb. | PM

Seal # DRM-1132L Waste Code A-26 WP Date

RSWD # 2844 Project # 309 Transaction #

Item #	Ident.	From Room Box	Net Wt. kg	Matrix	g Pu	%	MT	Generator Name	Waste Mgmt. Personnel	Auth. Pg/Ln	Date
1*	JMFS-510-FB	C 465	75.22	n.tefe Solts	8.47	6	52	CR	Arla	5/11	2/
2	JMFS 511-F1	C 468	51.36	"	12.71	"	"	CR	↓	5/11	2/
3	JMFS-512-FA	C 465	20.45	"	1.23	12	54	CR	↓	5/11	2/11-82
4											
5											
6											
7											
8											
9											
10											

MT	MASS SNM	NET WEIGHT	ACCOUNTABILITY CHECK
52	100.18g	126.58 kg	*KIP FLASS
54	1.23g	20.45 kg	

Verified Value

Bulk Weight 483 lbs 218.134 kg

CB11-COF-108

S823124

1 2 / 2 0 3 3 5

NONCERTIFIED TRU WASTE DRUM REPORT

Radioactive Solid Waste Disposal Record

Ret Serial Number (DrumID): 009736

RSWD Form Number: S823124
Old RSWD:
Date: 04/15/82

Origin of Waste	Waste Description
Group: CMB-11	Waste Code: A-26
TA: 55	Waste Description:
Building: PF-4	LEACHED SOLIDS
Room/Wing: 543	
Program Code:	Additional Description:

The Noncertified TRU Waste Supplemental Data Sheet was not included in the data package.

Noncertified TRU Waste Drum Item Information

DrumID: 009736

Item No	ItemID	Process Status	Net Wt (kg)	Matrix	Meas Code	SNM (g)	MT	Auth (Pg/Ln)	Comments
1	IXFS-543F1		91.000	EVAPORATOR SALTS		6.	52	5/11	
2	IXFS-544F1		68.000	EVAPORATOR SALTS		26.	52	5/11	

Noncertified Waste Drum Material Summary

Gross Wt (kg): 262.

Material Type	SNM (grams)	Items Net Wt (kg)
52	32.	159.00
Totals	32.	159.00

1 2 7 2 0 1 3 7

PLEASE READ INSTRUCTIONS ON BACK CAREFULLY

LOS ALAMOS RADIOACTIVE SOLID WASTE DISPOSAL RECORD FORM

H-7 Waste Management
Ext 6095 MS-592

1. FORM NUMBER
S 8 2 3124

2. DATE (M M D D Y Y)	3. RETRIEVABLE SERIAL NO.	4. ORIGIN OF WASTE					5. WASTE CODE
		GROUP	TA	BLDG.	WING	ROOM	
04 15 82	009736	CMB11	55	PF4		432	1.26

6. WASTE DESCRIPTION: Leached Solids

7. NUMBERS OF WASTE PACKAGES					
PLASTIC BAGS	CARD BOARD BOXES	DRUMS NO.	DRUMS GAL.	WOODEN CRATES NO.	WOODEN CRATES VOLUME-ft³
			155		

8. GROSS VOLUME	UNITS (M = METER³, F = FEET³, G = GALLON)	9. PACKAGE RADIATION AT: SURFACE MR/HR	1 METER MR/HR
2	M	1.0	

10. GROSS WEIGHT	UNITS (K = KILOGRAM, P = POUND, T = TON)
2620.0	K

11. ADDITIONAL DESCRIPTION OF PACKAGING AND PACKAGING MATERIALS:

12. RADIONUCLIDE CONTENT				UNITS (C = CURIE, M = GRAM)				AMOUNT DETERMINED BY: (A = ANALYSIS, M = MEASUREMENT, E = ESTIMATE)	SS MATERIALS WRITEOFF	
NUCLIDE	AMOUNT		±		ERROR ON AMOUNT		±		ACCOUNT	PROJECT CODE
Pu 52	3.2	E	+1	M		E		M	741	309
		E				E				
		E				E				
		E				E				
		E				E				
		E				E				

esfinosa
WASTE GENERATOR
Signature certifies that waste is in accordance with all applicable disposal requirements.

Mary O. David
H-1 AREA REPRESENTATIVE
Signature certifies that waste package or shipment is safe to handle and transport.

13. DATE DISPOSED (M M D D Y Y)

14. DISPOSAL/STORAGE LOCATION					
AREA	SHAFT	PIT	POST(S)	LAYER	POS.

15. SHAFT SURFACE DOSE
MR/HR

H-7 WASTE MANAGEMENT REPRESENTATIVE

HS-E 7-1A (10/81)

DISCARDABLE SOLIDS

☒ Leached ☐ N-Comb. ☐ Comb. ☐ PN

Seal # DRM-9736 Waste Code A-26 WP Date 4/15/82

RSWD # 3124 Project # 309 Transaction # 224595

Item #	Ident.	From Room Box	Net Wt. kg	Matrix	g Pu	%	MT	Generator Name	Waste Mgmt. Personnel	Auth. Pg/Ln	Date
1	IXFS-543FA	G-465	91.0	Evaporator Salts	6.0	6	52	A. Martinez	MAD	5/11	4/15
2	IXFS-544FA	G-465	68.0	Evaporator Salts	26.0	6	52	A. Martinez	↓	5/11	4/15
3											
4											
5											
6											
7											
8											
9											
10											

MT	MASS SNM	NET WEIGHT	ACCOUNTABILITY CHECK
52	32.0 g	159.0 KG	OK | P Glass

Verified Value ____

Bulk Weight 262.0 KG

S823184

1 2 7 2 0 7

Radioactive Solid Waste Disposal Record DrumID: 009920

15-Dec-95 RSWD: 3184 S823184

Old RSWD:

Date Sealed: 4/28/82

Origin of Waste

Group: CMB11

TA: 55

Building: PF 4

Room: 432

Program Code:

Waste Code: A26

Waste Desc: LEACHED SOLIDS

Gross Weight : 200.9 kg

Additional Description:

Initials: SB

Entry Date: 12/15/95

Discardable Waste Log Sheet

DrumID: 009920

Item#	ItemID	Net (kg)	Matrix	M Code	NM	MT	Auth	Remarks
1	IXFS 549 FB	28.64	NITRATE SALTS		10.91	52	5/11	
2	IXFS 550 FD	2.27	NITRATE SALTS		51.78	52	5/11	
3	IXFS 548 FB	4.77	NITRATE SALTS		11.68	52	5/11	
4	IXF 551 OX7	27.14	NITRATE SALTS		27.32	52	5/11	
5	IXFS 552 FA	64.78	NITRATE SALTS		60.03	52	5/11	
		127.6 kg						

PLEASE READ INSTRUCTIONS ON BACK CAREFULLY

1. FORM NUMBER
S 8 2 3184

LOS ALAMOS RADIOACTIVE SOLID WASTE DISPOSAL RECORD FORM

H-7 Waste Management
Ext 6095 MS-592

2. DATE (M M D D Y Y)	3. RETRIEVABLE SERIAL NO.	4. ORIGIN OF WASTE: GROUP	TA	BLDG.	WING	ROOM	5. WASTE CODE
042882	009920	CMB11	55	PF4		432	A2

6. WASTE DESCRIPTION: Leached Solids

7. NUMBERS OF WASTE PACKAGES: PLASTIC BAGS	CARD BOARD BOXES	DRUMS NO.	DRUMS GAL.	WOODEN CRATES NO.	WOODEN CRATES VOLUME-ft³
		1	55		

8. GROSS VOLUME	UNITS (M = METER³, F = FEET³, G = GALLON)
.7	M

9. PACKAGE RADIATION AT: SURFACE MR/HR	1 METER MR/HR
2	

10. GROSS WEIGHT	UNITS (K = KILOGRAM, P = POUND, T = TON)
2009	K

11. ADDITIONAL DESCRIPTION OF PACKAGING AND PACKAGING MATERIALS

12. RADIONUCLIDE CONTENT: NUCLIDE	AMOUNT	±	UNITS (C = CURIE, M = GRAM)	ERROR ON AMOUNT	±	AMOUNT DETERMINED BY: (A = ANALYSIS, M = MEASUREMENT, E = ESTIMATE)	SS MATERIALS WRITEOFF: ACCOUNT	PROJECT CODE
Pu 52	1.68	E +2	M		E	M	741	309
		E			E			
		E			E			
		E			E			
		E			E			
		E			E			

WASTE GENERATOR — Signature certifies that waste is in accordance with all applicable disposal requirements.

H-1 AREA REPRESENTATIVE — Signature certifies that waste package or shipment is safe to handle and transport.

GROUP LEADER (AS NECESSARY)

13. DATE DISPOSED (M M D D Y Y)

14. DISPOSAL/STORAGE LOCATION: AREA	SHAFT	PIT	POST(S)	LAYER	POS.

15. SHAFT SURFACE DOSE MR/HR

H-7 WASTE MANAGEMENT REPRESENTATIVE

HS-E 7-1A (10/81)

Leached | N-Comb. | Comb. | PN

Seal # DRM-9920 Waste Code A-26 WP Date

RSWD # 3184 Project # 309 Transaction #

Item #	Ident.	From Room Box	Net Wt. kg	Matrix	g Pu	%	MT	Generator Name	Waste Mgmt. Personnel	Auth. Pg/Ln	Date
1	IXFS-549-FB	G 468	28.64	nitrate salt	10.41	6	52	CS	A. G	5/11	4/
2	IXFS-550-FD	"	2.27	"	57.78	6	52	J.M		5/11	1.2
3	IXFS-548-FB	"	4.77	"	11.68	6	52	A.M		5/11	4/16
4	IXF-551-0X7	"	27.14	"	27.72	6	52	A.M		5/11	4/22
5	IXFS-552-FA	"	64.78	"	60.03	6	52	C.S.		5/11	4/22
6											
7											
8											
9											
10											

MT	MASS SNM	NET WEIGHT	ACCOUNTABILITY CHECK	Verified Value
52	168.12 g	127.60 Kg	QL PFLASS	Bulk Weight 200.91 Kg

*: 30.91 Kg/68.07 g [illegible]

BDT-100 Trans 2 QUALITY CONTROL

S825878

Radioactive Solid Waste Disposal Record DrumID: ~~13748~~ 013748

05-Jul-95 RSWD: 5878 5825878

Old RSWD:

Date Sealed: 12/15/82

Origin of Waste

Group: MSTDO

TA: 55

Building: PF-4

Room: 432

Program Code:

Waste Code: A25

Waste Desc: LEACHED SOLIDS

Gross Weight : 162.3 kg

Additional Description: MST-12

Initials: CG
re-entered 8/23/96
Entry Date: 6/22/95

Discardable Waste Log Sheet

DrumID: 13748

Item#	ItemID	Net (kg)	Matrix	M Code	NM	MT	Auth	Remarks
1	IXFS-682-FA	42.05	NITRATE SALTS		173.1	52	6/11	G-468
2	IXFS-683-FA	5.23	NITRATE SALTS		4.93	52	6/11	G-468
3	IXFS-684-FC	8.64	NITRATE SALTS		6.47	52	6/11	G-469
4	IXFS-685-FA	19.09	NITRATE SALTS		7.27	52	6/11	G-468
5	IXFS-686-FA	12.95	NITRATE SALTS		5.59	52	6/11	
		87.96 kg						

PLEASE READ INSTRUCTIONS ON BACK CAREFULLY

LOS ALAMOS RADIOACTIVE SOLID WASTE DISPOSAL RECORD FORM

H 7 Waste Management
Ext 6095 MS-592

1. FORM NUMBER
S 8 2 5578

2. DATE (M M D D Y Y)	3. RETRIEVABLE SERIAL NO.	4. ORIGIN OF WASTE: GROUP	TA	BLDG.	WING	ROOM	5. WASTE CODE
121582	013748	MST-DO	55	PF4		432	A25

6. WASTE DESCRIPTION: Leached solids

7. NUMBERS OF WASTE PACKAGES: PLASTIC BAGS	CARD BOARD BOXES	DRUMS NO.	DRUMS GAL.	WOODEN CRATES NO.	WOODEN CRATES VOLUME ft³	8. GROSS VOLUME	UNITS (M = METER³, F = FEET³, G = GALLON)	9. PACKAGE RADIATION AT: SURFACE MR/HR	1 METER MR/HR
		1	55			.2	M	2	0

10. GROSS WEIGHT	UNITS (K = KILOGRAM, P = POUND, T = TON)	11. ADDITIONAL DESCRIPTION OF PACKAGING AND PACKAGING MATERIALS
1623	K	MST-12

12. RADIONUCLIDE CONTENT: NUCLIDE	AMOUNT	±	UNITS (C = CURIE, M = GRAM)	ERROR ON AMOUNT	±	AMOUNT DETERMINED BY (A = ANALYSIS, M = MEASUREMENT, E = ESTIMATE)	SS MATERIALS WRITEOFF: ACCOUNT	PROJECT CODE
Pu 52	1.973	E +2	M		E	A	741	309
		E			E			
		E			E			
		E			E			
		E			E			
		E			E			

WASTE GENERATOR — Signature certifies that waste is in accordance with all applicable disposal requirements.

H-1 AREA REPRESENTATIVE — Signature certifies that waste package or shipment is safe to handle and transport.

~~GROUP LEADER (AS NECESSARY)~~

13. DATE DISPOSED (M M D D Y Y)	14. DISPOSAL/STORAGE LOCATION: AREA	SHAFT	PIT	POST(S)	LAYER	POS.	15. SHAFT SURFACE DOSE MR/HR

H-7 WASTE MANAGEMENT REPRESENTATIVE

HS-E 7-1A (10/81)

DISCARDABLE SOLIDS

Full

☑ Leached ☐ N-Comb. ☐ Comb. ☐ PN

Seal # DRM * 13748 Waste Code A-25 WP Date

RSWD # 5878 Project # 309 Transaction #

Item #	Ident.	From Room Box	Net Wt. Kg	Matrix	g Pu	%	MT	Generator Name	Waste Mgmt. Personnel	Auth. Pg/Ln	Date
1	IXFS 682 FA	6-468	42.05	Nitrate salts	173.10	6	52	PNP/RCC	A. Ca	6 11	12/13/82
2	IXFS-683 FA	"	5.23	Nitrate Salts	4.93	6	52	PNP/RCC	↓	6 11	12/13/82
3	IXFS-684 FC	"	8.64	Nitrate Salts	6.47	6	52	PNP/RCC	↓	6 11	12/13/82
4	IXFS-685 FA	"	19.09	Nitrate Salts	7.27	6	52	PNP/RCC	↓	6 11	12/13/82
5	IXFS-686 FA	"	12.95	Nitrate Salts	5.59	6	52	PNP/RCC	↓	6 11	12/13/82
6											
7											
8											
9											
10											

MT	MASS SNM	NET WEIGHT	ACCOUNTABILITY CHECK
52	197.36 gr.	87.96 KG	

OK to FCA SS

shipped out from E.V. 12/15/82

Verified Value

Bulk Weight 162.27 KG

MST-11-COF-108

S825879

1934 0124

Radioactive Solid Waste Disposal Record DrumID: 012074

23-Oct-95

RSWD: ~~5879~~ 6825879

Old RSWD:

Date Sealed: 12/15/82

Origin of Waste

Group: MSTD

TA: 55

Building: PF 4

Room: 432

Program Code:

Waste Code: A25

Waste Desc: LEACHED SOLIDS

Gross Weight : 159.6 kg

Additional Description: MST 12

Initials: SB

Entry Date: 10/23/95

Rm entered 8/21/96 CG

Discardable Waste Log Sheet

DrumID: 012074

Item#	ItemID	Net (kg)	Matrix	M Code	NM	MT	Auth	Remarks
1	IXFS682FB	12.27	NITRATE SALTS		45.36	52	6/11	6-468
2	IXFS683FD	6.36	NITRATE SALTS		2.54	52	6/11	6-468
3	IXFS686FH	20	NITRATE SALTS		0	52	6/11	6-468
4	IXFS688FA	50.91	NITRATE SALTS		7.34	52	6/11	6-468
		89.54 kg						

1 9 1 4 0 1 2 0

PLEASE READ INSTRUCTIONS ON BACK CAREFULLY

LOS ALAMOS RADIOACTIVE SOLID WASTE DISPOSAL RECORD FORM

H 7 Was[redacted]nt
Ext 609[redacted]

1. FORM NUMBER
S 8 2 5 9

2. DATE (M M D D Y Y)	3. RETRIEVABLE SERIAL NO.	4. ORIGIN OF WASTE: GROUP	TA	BLDG.	WING	ROOM	5. WASTE CODE
12/1582	012074	NSTDO	55	PF4		432	R25

6. WASTE DESCRIPTION: Leached Solids

7. NUMBERS OF WASTE PACKAGES: PLASTIC BAGS	CARD BOARD BOXES	DRUMS NO.	DRUMS GAL.	WOODEN CRATES NO.	WOODEN CRATES VOLUME ft³
		1	55		

8. GROSS VOLUME	UNITS (M = METER³, F = FEET³, G = GALLON)
2	M

9. PACKAGE RADIATION AT: SURFACE MR/HR	1 METER MR/HR
5	K

10. GROSS WEIGHT	UNITS (K = KILOGRAM, P = POUND, T = TON)
1596	K

11. ADDITIONAL DESCRIPTION OF PACKAGING AND PACKAGING MATERIALS: NST-12

12. RADIONUCLIDE CONTENT: NUCLIDE	AMOUNT		±	UNITS (C = CURIE, M = GRAM)	ERROR ON AMOUNT		±	AMOUNT DETERMINED BY (A = ANALYSIS, M = MEASUREMENT, E = ESTIMATE)	SS MATERIALS WRITEOFF: ACCOUNT	PROJECT CODE
Pu 52	552	E	+1	M		E		A	741	309
		E				E				
		E				E				
		E				E				
		E				E				
		E				E				

WASTE GENERATOR — Signature certifies that waste is in accordance with all applicable disposal requirements.

H-1 AREA REPRESENTATIVE — Signature certifies that waste package or shipment is safe to handle and transport.

GROUP LEADER (AS NECESSARY)

13. DATE DISPOSED (M M D D Y Y)

14. DISPOSAL/STORAGE LOCATION: AREA	SHAFT	PIT	POST(S)	LAYER	POS

15. SHAFT SURFACE DOSE MR/HR

H-7 WASTE MANAGEMENT REPRESENTATIVE

HS-E 7-1A (10/81)

DISCARDABLE SOLIDS

Full

☑ Leached ☐ N-Comb. ☐ Comb. ☐ PN

Seal # DRM* 12074 Waste Code R-25 WP Date

RSWD # 5879 Project # 309 Transaction #

Item #	Ident.	From Room Box	Net Wt. Kg	Matrix	g Pu	%	MT	Generator Name	Waste Mgmt. Personnel	Auth. Pg/Ln	Date
1	IXFS-682-FB	C-468	12.27	Nitrate Salts	45.36	6	52	PDP/RLC		6 11	12/13/82
2	IXFS-683FD	"	6.36	"	2.54	6	52	PDP/RLC		6 11	12/13/82
3	IXFS-686 FH	"	20.00	"	Ø	6	52	PDP/RLC		6 11	12/13/82
4	IXFS-684 FA	"	50.91	"	7.34	6	52	PDP/RLC		6 11	12/13/82
5											
6											
7											
8											
9											
10											

MT	MASS SNM	NET WEIGHT	ACCOUNTABILITY CHECK
52	55.24 gr.	89.54 KG	OK OPERATOR

Verified Value

Bulk Weight 159.55 KG

shipped out from E.V. 12/15/82

MST-11-COF-108

S851415

-ERROR- Unrecognized command - retype it

08/13/93

NONCERTIFIED TRU WASTE DRUM REPORT

Radioactive Solid Waste Disposal Record

Ret Serial Number (DrumID): 019661

RSWD Form Number: S851415
Old RSWD:
Date: 01/02/85

Origin of Waste

Group: MST-10
TA: 55
Building: PF-4
Room/Wing: 432
Program Code:

Waste Description

Waste Code: A25
Waste Description: LEACHED SOLIDS

Additional Description:
MST-12

PCL 08/13/93

-WARNING- No rows satisfy the WHERE clause
-WARNING- No rows satisfy the WHERE clause

Noncertified TRU Waste Drum Item Information

DrumID: 019661

Item No	ItemID	Process Status	Net Wt (kg)	Matrix	Meas Code	SNM (g)	MT	Auth (Pg/Ln)		Comments
1	OX137163NW		30.240	NITRATE SALTS		18.55	52	6/14	G468	
2	LR166NE1		15.000	NITRATE SALTS		7.28	52	6/14	G468	
3	LR166NW1		15.910	NITRATE SALTS		9.96	52	6/14	G468	
4	RR167VR		8.200	NITRATE SALTS		9.05	52	6/14	G468	
5	RR168VR		3.900	NITRATE SALTS		1.5	52	6/14	G468	
6	LR169NE1		15.450	NITRATE SALTS		13.06	52	6/14	G468	
7	LR169NW1		7.270	NITRATE SALTS		2.97	52	6/14	G468	
8	OX138170NE		19.530	NITRATE SALTS		17.12	52	6/14	G468	
9	OX138170NW		29.770	NITRATE SALTS		33.61	52	6/14	G468	
10	OX139171NE		[redacted] 5.220	NITRATE SALTS		8.39	52	6/14	G468	

Noncertified Waste Drum Material Summary

Gross Wt (kg): 205.8

Material Type	SNM (grams)	Items Net Wt (kg)
52	121.49	150.47
Totals	121.49	150.47

1 9 7 7 0 7 7

PLEASE READ INSTRUCTIONS ON BACK CAREFULLY

LOS ALAMOS RADIOACTIVE SOLID WASTE DISPOSAL RECORD

HSE-7 Waste Management
Ext 6095 MS J592

1. FORM NUMBER
S 8 5 1415

2. DATE (M M D D Y Y)	3. RETRIEVABLE SERIAL NO.	4. ORIGIN OF WASTE: GROUP	TA	BLDG.	WING	ROOM	5. WASTE CODE
0 1 0 2 8 5	0 1 9 6 6 1	M S T 1 1 0	5 5	P F 4		4 3 2	A 2 5

6. WASTE DESCRIPTION: LEACHED SOLIDS

7. NUMBERS OF WASTE PACKAGES: PLASTIC BAGS	CARD-BOARD BOXES	DRUMS NO.	DRUMS GAL.	WOODEN CRATES NO.	WOODEN CRATES VOLUME-ft³
		1	5 5		

8. GROSS VOLUME	UNITS (M = METER³, F = FEET³, G = GALLON)
2	M

9. PACKAGE RADIATION AT: SURFACE MR/HR	1 METER MR/HR
2	1

10. GROSS WEIGHT	UNITS (K = KILOGRAM, P = POUND, T = TON)
2058	K

11. ADDITIONAL DESCRIPTION OF PACKAGING AND PACKAGING MATERIALS: MST 1 2

12. RADIONUCLIDE CONTENT: NUCLIDE	AMOUNT		±	UNITS (C = CURIE, M = GRAM)	ERROR ON AMOUNT		±	AMOUNT DETERMINED BY (A = ANALYSIS, M = MEASUREMENT, E = ESTIMATE)	SS MATERIALS WRITEOFF: ACCOUNT	PROJECT CODE
PU 152	12.15	E	+2	M		E		A	741	309
		E				E				
		E				E				
		E				E				
		E				E				
		E				E				

A. J. MOLDON JR.
WASTE GENERATOR
Signature certifies that waste is in accordance with all applicable disposal requirements.

Ronald W Blackwelder
HSE-1 AREA REPRESENTATIVE
~~GROUP LEADER (AS NECESSARY)~~
Signature certifies that waste package or shipment is safe to handle and transport.

13. DATE DISPOSED (M M D D Y Y)

14. DISPOSAL/STORAGE LOCATION: AREA	SHAFT	PIT	POST(S)	LAYER	POS.

15. SHAFT SURFACE DOSE MR/HR

HSE-7 WASTE MANAGEMENT REPRESENTATIVE _____ *Signature certifies waste met acceptance criteria*

DISCARDABLE SOLIDS

☐ Leached ☐ H-Comb. ☐ Comb. ☐ PH

Seal # DRM 19661 Waste Code A-25 WP Date

RSWD # 1415 Project # 307 Transaction #

Item #	Ident.	From Room Box	Net Wt. Kg	Matrix	g Pu	%	HI	Generator Name	Waste Hand. Personnel	Auth. Pg/Ln	Date
1	OX137163NW	6468	30.24	nitrate salt	18.55	6.05	52	[illegible]	L. MORGAN	[illegible]	[illegible]
2	LR166NE1	"	15.0	"	7.28	6.04	52	Andrew Martinez		[illegible]	[illegible]
3	LR166NW1	"	15.91	"	9.96	6.04	52	Andrew [illegible]		[illegible]	[illegible]
4	KR164VR	"	8.20	"	9.05	6.10	52	Andrew Martinez		[illegible]	[illegible]
5	KR164VR	"	3.9	"	1.50	6.10	52	Andrew Martinez		[illegible]	[illegible]
6	LR169NE1	"	15.45	"	13.06	5.93	52	[illegible]		[illegible]	[illegible]
7	LR169NW1	"	2.37	"	2.97	[illegible]	52	[illegible]		[illegible]	[illegible]
8	OX133170NE	"	19.53	"	17.13	6.00	[illegible]	[illegible]		[illegible]	[illegible]
9	OX133170NW	"	29.77	"	33.61	6.00	52	[illegible]		[illegible]	[illegible]
10	OX134101NE	"	5.22	"	8.34	[illegible]	[illegible]	[illegible]		[illegible]	[illegible]

HI	MASS SNM	NET WEIGHT	ACCOUNTABILITY CHECK
52	121.49g	150.31 Kg	

Verified Value

Bulk Weight 205 81

HST-11-COP-108

OK MASS

S853714

08/27/93

NONCERTIFIED TRU WASTE DRUM REPORT

Radioactive Solid Waste Disposal Record

Ret Serial Number (DrumID): 020603

RSWD Form Number: S853714
Old RSWD:
Date: 06/21/85

Origin of Waste

Group: MST-10
TA: 55
Building: PF-4
Room/Wing: 432
Program Code:

Waste Description

Waste Code: A25
Waste Description: LEACHED PROCESS

Additional Description:
MST-12 A0423
RESIDUE NITRATE SALT

AM 08/26/93

6517
7/16/98
CV

Noncertified TRU Waste Drum Item Information

DrumID: 020603

Item No	ItemID	Process Status	Net Wt (kg)	Matrix	Meas Code	SNM (g)	MT	Auth (Pg/Ln)		Comments
1	6DS2-5NE1		12.650	NITRATE SALTS		6.56	52	1/13	G468	
2	6DS2-5NE2		6.330	NITRATE SALTS		1.75	52	1/13	G468	
3	6OX2-6NW1		9.410	NITRATE SALTS		3.29	52	1/13	G468	
4	6OX2-6NW2		5.820	NITRATE SALTS		1.92	52	1/13	G468	
5	6LR3-7NE1		19.670	NITRATE SALTS		5.26	52	1/13	G468	
6	6LR4-8NE1		14.160	NITRATE SALTS		11.76	52	1/13	G468	
7	6LR4-8NW1		17.320	NITRATE SALTS		3.73	52	1/13	G468	
8	6DS3-9NE1		4.410	NITRATE SALTS		1.16	52	1/13	G468	
9	6OX3-10NW1		16.920	NITRATE SALTS		38.75	52	1/13	G468	
10	6DS3-9NW1		8.100	NITRATE SALTS		1.89	52	1/13	G468	
11	6LR5-11NE1		15.270	NITRATE SALTS		4.19	52	1/13	G468	
12	6LR6-12NW1		6.200	NITRATE SALTS		0.99	52	1/13	G468	

Noncertified Waste Drum Material Summary

Gross Wt (kg): 207.3

Material Type	SNM (grams)	Items Net Wt (kg)
52	81.25	136.26
Totals	81.25	136.26

PLEASE READ INSTRUCTIONS ON BACK CAREFULLY

LOS ALAMOS RADIOACTIVE SOLID WASTE DISPOSAL RECORD

HSE-7 Waste Management
Ext 6095 MS J592

1. FORM NUMBER
S 8 5 3714

2. DATE (M M D D Y Y)	3. RETRIEVABLE SERIAL NO.	4. ORIGIN OF WASTE: GROUP	TA	BLDG.	WING	ROOM	5. WASTE CODE
06 21 85	020603	MST	10	55 PF4		432	A25

6. WASTE DESCRIPTION: Leached process Residue Nitrate Salt

7. NUMBERS OF WASTE PACKAGES: PLASTIC BAGS	CARD-BOARD BOXES	DRUMS NO.	DRUMS GAL.	WOODEN CRATES NO.	WOODEN CRATES VOLUME-ft³
		155			

8. GROSS VOLUME	UNITS (M = METER³, F = FEET³, G = GALLON)
2	M

9. PACKAGE RADIATION AT: SURFACE MR/HR	1 METER MR/HR
4	1

10. GROSS WEIGHT	UNITS (K = KILOGRAM, P = POUND, T = TON)
2073	K

11. ADDITIONAL DESCRIPTION OF PACKAGING AND PACKAGING MATERIALS: MST-12 AB423

12. RADIONUCLIDE CONTENT: NUCLIDE	AMOUNT		±	UNITS (C = CURIE, M = GRAM)	ERROR ON AMOUNT		±	AMOUNT DETERMINED BY (A = ANALYSIS, M = MEASUREMENT, E = ESTIMATE)	SS MATERIALS WRITEOFF: ACCOUNT	PROJECT CODE
PU 52	8.25	E	+1	M		E		A	741	309
		E				E				
		E				E				
		E				E				
		E				E				
		E				E				

Gianaire Gary
WASTE GENERATOR
Signature certifies that waste is in accordance with all applicable disposal requirements.

HSE-1 AREA REPRESENTATIVE

Ronald W Blackenship
GROUP LEADER (AS NECESSARY)
Signature certifies that waste package or shipment is safe to handle and transport.

13. DATE DISPOSED (M M D D Y Y)

14. DISPOSAL/STORAGE LOCATION: AREA	SHAFT	PIT	POST(S)	LAYER	POS.

15. SHAFT SURFACE DOSE MR/HR

HSE-7 WASTE MANAGEMENT REPRESENTATIVE

Signature certifies waste met acceptance criteria, and all disposal requirements were met.

DISCARDABLE SOLIDS

☑ Leached ☐ H-Comb. ☐ Comb. ☐ PH

Seal # DRM20603 Waste Code WP A-25 Date

RSWB # 3714 Project # 309 Transaction #

Item #	Ident.	From Room Box	Net Wt. Kg	Matrix	g Pu	%	HF	Generator Name	Waste Mgmt. Personnel	Auth. Pg/Lu	Date
1	6DS2-5NE1	G468	12.65	NITRATE SALTS	6.56	5.93	52	Rick Bye	Cip Gomez	1 13	6-11
2	6DS2-5NE2	"	6.33	"	1.75	5.93	52	Rick Bye	Cip Gomez	1 13	6-11
3	6DX2-6NW1	"	9.41	"	3.29	5.91	52	Rick Bye	Cip Gomez	1 13	6-12
4	6DX2-6NW2	"	5.82	"	1.92	5.92	52	Rick Bye	Cip Gomez	1 13	6-12
5	6LR4-7NE1	"	19.67	"	5.26	5.90	52	Rick Bye	Cip Gomez	1 13	6-13
6	6LR4-8NE1	"	14.16	"	11.76	6.42	52	Rick Bye	Cip Gomez	1 13	6-13
7	6LR4-8NW1	"	17.32	"	3.73	6.42	52	Rick Bye	Cip Gomez	1 13	6-13
8	6DS3-9NE1	"	4.41	"	1.16	5.91	52	Rick Bye	Cip Gomez	1 13	6-18
9	6DX3-10NW1	"	16.92	"	38.35	5.96	52	Rick Bye	Cip Gomez	1 13	6-19
10	6DS3-9NW1	"	8.10	"	1.89	5.91	52	Rick Bye	Cip Gomez	1 13	6-21

HF MASS SUM NET WEIGHT ACCOUNTABILITY CHECK

Verified Value

Bulk Weight

Page 1 of 2

DST-11-COF-108

DISCARDABLE SOLIDS

☑ Leached ☐ H-Comb. ☐ Comb. ☐ PU

Seal # DRM20603

RSWD # 3714

Waste Code WP A-25

Project # 309

Date

Transaction #

Item #	Ident.	From Room Box	Net Ft. Kg	Matrix	g Pu	%	HT	Generator Name	Waste Mgmt. Personnel	Auth. Pg/Ln	Date
1	6LR5-11NE1	G468	15.27	NITRATE SALTS	4.19	5.98	52	[illegible]	[illegible]	13	
2	6LR6-12N1W1	"	6.20	"	.99	6.04	52	[illegible]	[illegible]	1 / 13	6-21
3										1	6-21
4											
5											
6											
7											
8											
9											
10											

HT	MASS SHU	NET WEIGHT
52	81.25	136.26

ACCOUNTABILITY CHECK

Verified Value

Bulk Weight 227.3

Page 2 of 2

OC Mass

HST-11-COF-108

S862888

1939 1322

06/08/94

NONCERTIFIED TRU WASTE DRUM REPORT

Radioactive Solid Waste Disposal Record

Ret Serial Number (DrumID): 021049

RSWD Form Number: S862888
Old RSWD:
Date: 05/08/86

Origin of Waste

Group: MST-10
TA: 55
Building: PF-4
Room/Wing: 432
Program Code:

Waste Description

Waste Code: A26
Waste Description: LEACHED SOLIDS SALTS

Additional Description:
MST-12 A02040

PCL 06/07/94

6757
7/17/98
CV

Noncertified TRU Waste Drum Item Information

DrumID: 021049

Item No	ItemID	Process Status	Net Wt (kg)	Matrix	Meas Code	SNM (g)	MT	Auth (Pg/Ln)		Comments
1	3LR13E1		14.840	SALTS		2.	53	1/13	G468	
2	30X17E2		6.080	SALTS		2.1	52	1/13	G468	
3	30X17E1		8.530	SALTS		1.89	52	1/13	G468	
4	30X17W1		3.960	SALTS		0.76	52	1/13	G468	
5	3LR13W1		9.570	SALTS		2.89	53	1/13	G468	
6	3DS14E1		5.700	SALTS		2.06	52	1/13	G468	
7	4RR14W1		7.500	SALTS		2.55	52	1/13	G468	
8	30X31E1		6.010	SALTS		0.763	52	1/13	G468	
9	4LR4W1		3.790	SALTS		0.848	52	1/13	G468	
10	40X1W3		12.580	SALTS		2.99	52	1/13	G468	
11	40X14W1		10.970	SALTS		1.79	52	1/13	G468	

Noncertified Waste Drum Material Summary

Gross Wt (kg): 169.

Material Type	SNM (grams)	Items Net Wt (kg)
52	15.751	65.12
53	4.89	24.41
Totals	20.641	89.53

Los Alamos

Los Alamos National Laboratory
Los Alamos, New Mexico 87545

RADIOACTIVE SOLID WASTE DISPOSAL RECORD

NOTE Read instructions on back carefully before completing this form

HSE-7 Waste Management
Ext. 6095, MS J592

1. Form Number: S 8 6 2888

2. Date (M M D D Y Y): 0 5 0 8 8 6

3. Retrievable Serial Number: 0 2 1 0 4 9

4. Origin of Waste

Group	TA	Building	Wing	Room
M S 7 1 0	5 5	P F 4	[redacted]	4 3 2

5. Waste Code: A 2 6

6. Waste Description: Leached Solids SA473

7. Numbers of Waste Packages

Plastic Bags	Card-Board Boxes	Drums No	Drums Gal	Wooden Crates No	Wooden Crates Volume ft³
		1	55		

8. Gross Volume

Amount	(M = meter³, F = foot³, G = gallon)
.2	M [redacted]

9. Package Radiation at

Surface (mr/hr)	1 Meter (mr/hr)
2.0	0

10. Gross Weight

Amount	(K = kilogram, P = pound, T = ton)
1690	K [redacted]

11. Additional Description of Packaging and Packaging Materials: M S 7 1 2 A 0 2 0 1 4 0

12. Radionuclide Content

Nuclide	Amount	±	(C = curie, M = gram)	Error on Amount	±	Amount Determined By: (A = analysis, M = measurement, E = estimate)	SS Materials Write-Off Account	Project Code
Pu 52	1.5215 E	+1	M [redacted]	. E		A [redacted]	741	309
Pu 53	4.819 E	+0	M [redacted]	. E		A [redacted]	741	309
	. E		[redacted]	. E		[redacted]		
	. E		[redacted]	. E		[redacted]		
	. E		[redacted]	. E		[redacted]		
	. E		[redacted]	. E		[redacted]		

APPROVALS

Waste Generator (Print Name Here)	HSE-17/-10/-11 Area Representative (Print Name Here)	Additional Signatures (Optional)
Patricia A. Espinoza	Gilberto R. Estrada	[illegible]
Signature certifies that waste is in accordance with all applicable disposal requirements: Patricia A. Espinoza	Signature certifies that waste package or shipment is safe to handle and transport: Gilberto R. Estrada	

13. Date Disposed (M M D D Y Y)

14. Disposal/Storage Location

Area	Shaft	Pit	Post(s)	Layer	Pos
			T		

15. Shaft Surface Dose mr/hr

HSE-7 Waste Management Representative (Print Name Here)	Received	Logbook	Computer	Verified
Signature certifies that waste acceptance criteria and all disposal requirements were met (Signature)	Date	Date	Date	Date

Form Number HS 10-2A (3/86)

1 of 2

DISCARDABLE SOLIDS

☑ Leached ☐ H-Comb. ☐ Comb. ☐ PH

Seal # NRC # 21014

Seal # 02040

Waste Code A-26 WP

Project # 309

Date 5/8/86

Transaction #

RSWD # 2888

Item #	Ident.	From Room Box	Net Wt. Kg	Matrix	g Pu	%	HF	Generator Name	Waste Mgmt. Personnel	Auth. Pg/Lo	Date
1	3LF 13E1	6-166	14.[illegible]	SA/TS	2.00	7.96	53	[illegible]	Patte Espinoza	1 / 13	3/18
2	30X17E2	7	6.[illegible]		2.10	6.[illegible]	52	[illegible]		1 / 13	3/22
3	30X17E1		8.52		1.39	6.01	52	[illegible]		1 / 13	3/21
4	30X17W1		3.96		.7[illegible]	6	52	[illegible]		1 / 13	3/22
5	3LR13W1		9.57		2.39	7.9[illegible]	53	[illegible]		1 / 13	3/18
6	3DS14E1		5.70		2.06	6.17	52	[illegible]		1 / 13	3/15
7	4RR14W1		7.50		2.55	5.96	52	WS		1 / 13	4/17
8	30X[illegible] E1		6.01		.763	5.99	52	WS		1 / 13	4/15
9	4LR14W1		8.79		.848	6.03	52	WS		1 / 13	4/11
10	40X1W3		12.58		2.99	5.93	52	WS	Patte Espinoza	1 / 13	4/9

HF	MASS SUM	NET WEIGHT
52	15.75	65.12 KG
53	4.89 g	24.51 KG

ACCOUNTABILITY CHECK

OK/MASS

Total Pu 21 grams

Date Shipped 5/8/86

Verified Value

Bulk Weight 169 KG

HST-11-COF-108

2 of 2

DISCARDABLE SOLIDS

☑ Leached ☐ B-Comb. ☐ Comb. ☐ PU

Drum # 0021049

Seal # 0240

RSWD 2888

Waste Code

Project # 309

Date 5/8/86

Transaction #

Item #	Ident.	From Room Box	Net Wt. Kg	Matrix	g Pu	%	HT	Generator Name	Waste Mgmt. Personnel	Auth. Pg/Ln	Date
1	40X14W1	G468	10.97	SHTS	1.79	5.71	52	WS		13	4/16
2											
3											
4											
5											
6											
7											
8											
9											
10											

HT MASS SUM NET WEIGHT ACCOUNTABILITY CHECK

Verified Value

Bulk Weight

HST-11-COF-108

See page 1 for Data

S864213

09/14/93

NONCERTIFIED TRU WASTE DRUM REPORT

Radioactive Solid Waste Disposal Record

Ret Serial Number (DrumID): 021268

RSWD Form Number: S864213
Old RSWD:
Date: 08/25/86

Origin of Waste

Group: MST-10
TA: 55
Building: PF-4
Room/Wing: 432
Program Code:

Waste Description

Waste Code: A26
Waste Description: LEACHED SOLIDS

Additional Description:
MST-12 A02027

AM 09/14/93

6970
7/21/98
CJ

Noncertified TRU Waste Drum Item Information

DrumID: 021268

Item No	ItemID	Process Status	Net Wt (kg)	Matrix	Meas Code	SNM (g)	MT	Auth (Pg/Ln)	Comments
1	GDS12W1		9.000	NITRATE SALTS	R00	13.59	52	1/13	ROOM 434 G468
2	7LR10E1		11.070	NITRATE SALTS	R00	1.53	53	1/13	ROOM 434 G468
3	7LR11E1		7.700	NITRATE SALTS	R00	1.58	52	1/13	ROOM 434 G468
4	7OX15W1		19.640	NITRATE SALTS	R00	11.94	52	1/13	ROOM 434 G468
5	7OX16E1A		17.780	NITRATE SALTS	R00	14.09	52	1/13	ROOM 434 G468
6	7OX16E1B		9.460	NITRATE SALTS	R00	4.74	52	1/13	ROOM 434 G468
7	7LR16E1		13.150	NITRATE SALTS	R00	3.57	52	1/13	ROOM 434 G468
8	7OX17E1		5.470	NITRATE SALTS	R00	2.98	52	1/13	ROOM 434 G468
9	7LR17E1		4.550	NITRATE SALTS	R00	2.02	52	1/13	ROOM 434 G468
10	7RRZ1E1		2.910	NITRATE SALTS	R00	1.68	52	1/13	ROOM 434 G468
11	7OX17W1		16.290	NITRATE SALTS	R00	6.97	52	1/13	ROOM 434 G468

Noncertified Waste Drum Material Summary

Gross Wt (kg): 197.

Material Type	SNM (grams)	Items Net Wt (kg)
52	63.16	105.95
53	1.53	11.07
Totals	64.69	117.02

Los Alamos

Los Alamos National Laboratory
Los Alamos, New Mexico 87545

RADIOACTIVE SOLID WASTE DISPOSAL RECORD

NOTE: Read instructions on back carefully before completing this form

HSE-7 Waste Management
Ext. 6095, MS J592

1. Form Number: S 8 6 4213

2. Date (M M D D Y Y): 082586

3. Retrievable Serial Number: 021268

4. Origin of Waste

Group	TA	Building	Wing	Room
MST10	55	PF4	[redacted]	432

5. Waste Code: A26

6. Waste Description: Leached Solids

7. Numbers of Waste Packages

Plastic Bags	Card-Board Boxes	Drums No.	Drums Gal.	Wooden Crates No.	Wooden Crates Volume-ft³
		1	55		

8. Gross Volume

Amount	(M = meter³, F = foot³, G = gallon)
2	M [redacted]

9. Package Radiation at

Surface (mr/hr)	1 Meter (mr/hr)
8	1

10. Gross Weight

Amount	(K = kilogram, P = pound, T = ton)
1970	K [redacted]

11. Additional Description of Packaging and Packaging Materials: MST12 A02027

12. Radionuclide Content

Nuclide	Amount	±	(C = curie, M = gram)	Error on Amount	±	Amount Determined By: (A = analysis, M = measurement, E = estimate)	SS Materials Write-Off Account	Project Code
Pu 52	6.316 E	+1	M [redacted]	. E		A [redacted]	741	309
Pu 53	1.53 E	+0	M [redacted]	. E		A [redacted]	741	309
	. E		[redacted]	. E		[redacted]		
	. E		[redacted]	. E		[redacted]		
	. E		[redacted]	. E		[redacted]		
	. E		[redacted]	. E		[redacted]		

APPROVALS

Waste Generator *(Print Name Here)*: Elipio Garcia
Signature certifies that waste is in accordance with all applicable disposal requirements: Elipio Garcia

HSE-1/-10/-11 Area Representative *(Print Name Here)*: Ken Carrigan
Signature certifies that waste package or shipment is safe to handle and transport: Ken Carrigan

Additional Signatures *(Optional)*: [illegible]

13. Date Disposed (M M D D Y Y):

14. Disposal/Storage Location

Area	Shaft	Pit	Post(s)	Layer	Pos.
			T		

15. Shaft Surface Dose mr/hr:

HSE-7 Waste Management Representative *(Print Name Here)*

Signature certifies that waste acceptance criteria and all disposal requirements were met. *(Signature)*

Received	Logbook	Computer	Verified
Date	Date	Date	Date

Form Number HS 10-2A (3/86)

DISCARDABLE SOLIDS

Tamper Seal # 112027

☑ Leached ☐ N-comb. ☐ Comb. ☐ PN

Seal # Drum 21268

Waste Code A-26 WP

Date Sealed 8-22-86

RSWD # 4213

Item #	Item ID	From Room/ Box	Net Wt. KG	Matrix (Material)	Meas. Code	g Pu	%	MT	Generator Name	Waste Mgmt. Personnel	Auth Pg/Ln	Date 1986
1	6DS12W1	434/6468	9.00kg	NITRATE SALTS	R00	13.59g	5.61	52	WKV	E. Ramirez	1/13	7/17
2	7LR10E1		11.07			1.53g	7.09	53			1/13	7/10
3	7LR11E1		7.70			1.58g	5.89	52			1/13	7/11
4	70X15W1		19.64			11.94g	6.00	52			1/13	7/15
5	70X16E1A		17.78			14.09g	5.92	52			1/13	7/16
6	70X16E1B		9.46			4.74g	5.92	52			1/13	7/16
7	7LR16E1		13.15			3.57g	6.00	52			1/13	7/17
8	70X17E1		5.47			2.98g	6.00	52			1/13	7/17
9	7LR17E1		4.55			2.02	6.00	52			1/13	7/17
10	7RB21E1		2.91			1.68	6.00	52			1/13	7/21

MT	MASS SNM	NET WEIGHT	ACCOUNTABILITY CHECK
52	63.16g WS	105.95 kg WS	
53	1.53g WS	11.07 kg WS	
		28.2 Empty Drum	
		145.22 KG	

Confirmation Value

Gross Weight 197.04 Kg

DISCARDABLE SOLIDS

Tamper Seal # A020027

Seal # DRUM 21268

RSWD # 4213

☑ Leached ☐ N-comb. ☐ Comb. ☐ PN

Waste Code A-26 WP

Date Sealed 8-22-86

Item #	Item ID	From Room/ Box	Net Wt. KG	Matrix (Material)	Meas. Code	g Pu	%	MT	Generator Name	Waste Mgmt. Personnel	Auth. Pg/Ln	Date
1	70X17W1	434/6468	16.29	NITRATE SALTS	R00	6.97	6.00	52	WMD	E. Dgeu	1/13	8/18-86
2												
3												
4												
5												
6												
7												
8												
9												
10												

MT MASS SNM NET WEIGHT ACCOUNTABILITY CHECK

SEE PAGE 1

Confirmation Value

Gross Weight See Page 1

S842446

PLEASE READ INSTRUCTIONS ON BACK CAREFULLY

1. FORM NUMBER
S 8 4 2446

LOS ALAMOS RADIOACTIVE SOLID WASTE DISPOSAL RECORD FORM

HSE-7 Waste Management
Ext 6095 MS J592

2. DATE (M M D D Y Y)	3. RETRIEVABLE SERIAL NO.	4. ORIGIN OF WASTE: GROUP	TA	BLDG.	WING	ROOM	5. WASTE CODE
020384	015265	MST	00	55	PF4	437	A26

6. WASTE DESCRIPTION

Leached Solids

7. NUMBERS OF WASTE PACKAGES: PLASTIC BAGS	CARD BOARD BOXES	DRUMS NO.	DRUMS GAL.	WOODEN CRATES NO.	WOODEN CRATES VOLUME ft³
		1	55		

8. GROSS VOLUME	UNITS (M = METER³, F = FEET³, G = GALLON)
24	

9. PACKAGE RADIATION AT: SURFACE MR/HR	1 METER MR/HR
5	2

10. GROSS WEIGHT	UNITS (K = KILOGRAM, P = POUND, T = TON)
27099	K

11. ADDITIONAL DESCRIPTION OF PACKAGING AND PACKAGING MATERIALS

MST 12 Rev 434

12. RADIONUCLIDE CONTENT: NUCLIDE	AMOUNT		±	UNITS (C = CURIE, M = GRAM)	ERROR ON AMOUNT		±	AMOUNT DETERMINED BY (A = ANALYSIS, M = MEASUREMENT, E = ESTIMATE)	SS MATERIALS WRITEOFF: ACCOUNT	PROJECT CODE
U 12	3	E	+30%			E		A	741	309
Pu 52	17	E	+1%			E		A	741	309
Pu 54	27	E	+1%			E		A	741	309
		E				E				
		E				E				
		E				E				

WASTE GENERATOR — signature certifies that waste is in accordance with all applicable disposal requirements

HSE-1 AREA REPRESENTATIVE — signature certifies that waste package or shipment is safe to handle and transport.

2/10/84 — GROUP LEADER (AS NECESSARY)

13. DATE DISPOSED (M M D D Y Y)
021484

14. DISPOSAL/STORAGE LOCATION: AREA	SHAFT	PIT	POST(S)	LAYER	POS.
G		P2	165	1	C

15. SHAFT SURFACE DOSE MR/HR

HSE-7 WASTE MANAGEMENT REPRESENTATIVE — ROSILA T. GARCIA
Signature certifies waste has [illegible] and all disposal requirements [illegible]

HS Form Number 10-2A (12/83)

S844602

5/M

PLEASE READ INSTRUCTIONS ON BACK CAREFULLY

1. FORM NUMBER
8,8,4, 4602

LOS ALAMOS RADIOACTIVE SOLID WASTE DISPOSAL RECORD FORM

HSE-7 Waste Management
Ext 6095 MS J592

2. DATE (M M D D Y Y)	3. RETRIEVABLE SERIAL NO.	4. ORIGIN OF WASTE: GROUP	TA	BLDG.	WING	ROOM	5. WASTE CODE
051184	015303	MST10	55	PF4		432	A25

6. WASTE DESCRIPTION
LEACHED SOLIDS

7. NUMBERS OF WASTE PACKAGES: PLASTIC BAGS	CARD BOARD BOXES	DRUMS NO.	DRUMS GAL.	WOODEN CRATES NO.	WOODEN CRATES VOLUME-ft³
		155			

8. GROSS VOLUME	UNITS (M = METER³, F = FEET³, G = GALLON)
2	M

9. PACKAGE RADIATION AT: SURFACE MR/HR	1 METER MR/HR
2	1

10. GROSS WEIGHT	UNITS (K = KILOGRAM, P = POUND, T = TON)
17297	K

11. ADDITIONAL DESCRIPTION OF PACKAGING AND PACKAGING MATERIALS
MST12

12. RADIONUCLIDE CONTENT: NUCLIDE	AMOUNT		±	UNITS (C = CURIE, M = GRAM)	ERROR ON AMOUNT		±	AMOUNT DETERMINED BY (A = ANALYSIS, M = MEASUREMENT, E = ESTIMATE)	SS MATERIALS WRITEOFF: ACCOUNT	PROJECT CODE
PU 52	1273	E	+2	M		E		A	741	309
PU 53	1447	E	+1	M		E		A	741	309
PU 54	1741	E	+1	M		E		A	741	309
		E				E				
		E				E				
		E				E				

A. J. Moran — WASTE GENERATOR
Signature certifies that waste is in accordance with all applicable disposal requirements

Louis C. Sauer — HSE-1 AREA REPRESENTATIVE
Signature certifies that waste package or shipment is safe to handle and transport

A. M. Scarborough — GROUP LEADER (AS NECESSARY)

13. DATE DISPOSED (M M D D Y Y)
072084

14. DISPOSAL/STORAGE LOCATION: AREA	SHAFT	PIT	POST(S)	LAYER	POS.
G		P2	18	4	E

15. SHAFT SURFACE DOSE R/HR

HSE-7 WASTE MANAGEMENT REPRESENTATIVE ROSILA F. GARCIA

Signature certifies waste met acceptance criteria, and all disposal requirements were met.

[redacted]

S794448

Radioactive Solid Waste Disposal Record DrumID: ~~5303~~ 605303

13-Jul-95 **RSWD: 4448** 57994448

Old RSWD:

Date Sealed: 12/5/79

Origin of Waste

Group: CMB11

TA: 55

Building: PF-4

Room: 432

Program Code:

Waste Code: A25

Waste Desc:

Gross Weight : 154.6 kg

Additional Description:

Initials: CG

Entry Date: 6/14/95

Discardable Waste Log Sheet DrumID: 5303

Item#	ItemID	Net (kg)	Matrix	M Code	NM	MT	Auth	Remarks
1	IXFS-98-F1	8.6	54		0	54	5/11	
2	IXFS-99-F1	12.95	54		0	54	5/11	
3	IXFS-58-R1B	3.8	54		1.99	54	5/11	
4	IXFS-100-F1	7.05	54		0	54	5/11	
5	IXFS-101-F1	7.27	52		0	52	5/11	
6	IXFS-102-F1	4.55	54		0.35	54	5/11	
7	IXFS-103-F1	6.59	54		0	54	5/11	
8	IXFS-104-F1	9.1	54		0	54	5/11	
9	IXFS-105-F1	11.3	54		0	54	5/11	
10	IXFS-106-F1	1.6	53		0	53	5/11	
11	V425A-F2	5	54		0.72	54	5/11	
		77.81 kg						

PLEASE READ INSTRUCTIONS ON BACK CAREFULLY

H-7 Waste Management
Ext 6095 MS-592

LASL RADIOACTIVE SOLID WASTE DISPOSAL RECORD FORM

1. FORM NUMBER: S 7 9 . 7 . 1

1

2. DATE (M M D D Y Y)	3. RETRIEVABLE SERIAL NO.	4. ORIGIN OF WASTE: GROUP	TA	BLDG.	WING	ROOM	WASTE CODE
120579	005303	CNB1	155	PF4		432	A25

6. WASTE DESCRIPTION

2

7. NUMBERS OF WASTE PACKAGES: PLASTIC BAGS	CARD-BOARD BOXES	DRUMS NO.	DRUMS GAL.	WOODEN CRATES NO.	WOODEN CRATES VOLUME · ft³	8. GROSS VOLUME	UNITS (M = METER³, F = FEET³, G = GALLON)	9. PACKAGE RADIATION AT: SURFACE MR/HR	1 METER MR/HR
			155			2	M	2	

10. GROSS WEIGHT	UNITS (K = KILOGRAM, P = POUND, T = TON)
1546	K

11. ADDITIONAL DESCRIPTION OF PACKAGING AND PACKAGING MATERIALS

3

12. RADIONUCLIDE CONTENT: NUCLIDE	AMOUNT	±	UNITS (C = CURIE, M = GRAM)	ERROR ON AMOUNT	±	AMOUNT DETERMINED BY (A = ANALYSIS, M = MEASUREMENT, E = ESTIMATE)	SS MATERIALS WRITEOFF: ACCOUNT	PROJECT CODE
PU 520000	E	+0	M		E	M	741	309
PU 530000	E	+0	M		E	M	741	309
PU 530060	E	+0	M		E	M	741	309
	E				E			

Frank Jones
WASTE GENERATOR
Signature certifies that waste is in accordance with all applicable disposal requirements.

CAD.
H-1 AREA REPRESENTATIVE
Signature certifies that waste package or shipment is safe to handle and transport.

R. Martinez
~~GROUP LEADER (AS NECESSARY)~~

4

13. DATE DISPOSED (M M D D Y Y)	14. DISPOSAL/STORAGE LOCATION: AREA	SHAFT	PIT	POST(S)	LAYER	POS.	15. SHAFT SURFACE DOSE MR/HR

10-78

H-7 WASTE MANAGEMENT REPRESENTATIVE _____

DISCARDABLE SOLIDS

DATE _____

LASL Labeled Solids

PERSONAL FILE _____

RA RS Item Description WIP TECH. AREA NO. _____

Nitrate Salt

Drum No. 5303

309

Ident.	From Room	Material	Net Wt. kg	Assay g Pu	% 240	Initial	Dry Box #	Auth. Page 5 Line #
IXFS-98-F1	434	54	8.60	0	12%	JM	6468	11
IXFS-99-F1	"	"	12.95	0	"	"	"	11
IXFS-68-R18	"	"	3.80	1.99	"	"	"	11
IXFS-100-F1	"	"	7.05	0	"	"	"	11
IXFS-101-F1	"	52	7.27	0	6%	"	"	11
IXFS-102-F1	"	54	4.55	0.35	12%	"	"	11
IXFS-103-F1	"	"	6.59	0	"	"	"	11
IXFS-104-F1	"	"	9.1	0	"	"	"	11
IXFS-105-F1	"	"	11.3	0	"	"	"	11
I[illegible]-106-F1	"	53	1.6	0	9%	"	"	11
1425A-F2	"	54	5.0	0.72	12%	"	"	11
		MT52	7.27	0				
		MT53	1.6	0		OK	DJM	
		MT54	68.94	3.06				

Total wt of Drum = 154.6 Kg

Contents of Drum have been packaged with Fiberaide and NaOH pellets within a polyethylene liner. Drum has also been lead lined

Attachment 2 – CCP Radiography Data Sheet

Section 1: General Information	
☑ RTR Examination ☐ RTR Replicate Scan ☐ RTR Independent Observation	
Site ID:	LANL
Batch Number:	LA-HERTR-12-0088
Examination Date:	08/22/12
Waste Container ID:	S794448
Video/Audio Recorded Media Number:	LA-HERTR-12-0088 C
Procedure and Revision No.:	CCP-TP-053 Rev. 11
NCR(s) associated with the container? (e.g., Prohibited Items)	☑ NO ☐ YES NCR No.: N/A NCR No.: N/A

Section 2: Waste Container Data	
Container Type:	55 GALLON DRUM
TRUCON Code:	LA226
Waste Matrix Code:	S3150
Waste Stream I.D.:	LA-CIN01.001
Waste Container Weights:	Gross Wt: 150.5 kg. Tare Wt: 60.1 kg. Net Wt: 90.4 kg.
Rigid Liner and Liner Vent Description: (e.g., "90 mil liner – NO Lid" or "NO Liner")	90mil Liner - Vented, Lead Lined Drum
Number of Layers of Confinement:	Appears to be 2 layers
Volume Utilization Percentage:	50 %

Attachment 2 – CCP Radiography Data Sheet (Continued)

Page 2 of 3

Waste Container ID: S794448

Section 3: Container Inventory and Comments (Detailed descriptions)
Plastic bags
Homogeneous solids

Section 4: Packaging Material and Waste Material Parameters		
Packaging Material:		Estimated Weight (kg)
Steel (ST):		27.7
Plastics (PP):	Plastic Liner Bag and 90mil Liner and Lid	9.4
Others:	Lead Liner	23.0
Total Packaging Weight:		60.1
Waste Material Parameter:		Estimated Weight (kg)
Iron-based Metal / Alloys (IM):		
Aluminum-based Metals / Alloys (AM):		
Other Metals (OM):		
Other Inorganic Materials (OI):		
Cellulosics (C):		
Rubber (R):		
Plastics (waste materials) (XPM):		4.0
Organic Matrix (OR):		
Inorganic Matrix (IN):		86.4
Soils (S):		
Total WMP Weight:		90.4

Attachment 2 – CCP Radiography Data Sheet (Continued)

Waste Container ID: S794448

Section 5: RTR Summary (Questions answered "YES" will be explained in the Comments block, except for Question 1)	Yes	No
Is there observable liquid?	☑	☐
Is there any observable liquid in internal containers, more than 60 milliliters or 3 percent by volume, whichever is greater?	☐	☑
Is the total volume of observable liquid in the outermost container **GREATER** than 1% of the container?	☐	☑
Is there observable liquid in payload containers with an EPA Hazardous Waste Number of U134?	☐	☑
Is there an indication of non-radionuclide pyrophoric materials, such as elemental potassium?	☐	☑
Is there an indication of hazardous wastes not occurring as co-contaminants with TRU mixed wastes (non-mixed hazardous wastes)?	☐	☑
Is there an indication of wastes incompatible with backfill, seal and panel closures materials, container and packaging materials, shipping container materials, or other wastes (i.e., waste does NOT match TRUCON Code[s])?	☐	☑
Is there an indication of wastes containing explosives or compressed gases?	☐	☑
Is there an indication of PCBs liquids?	☐	☑
Is there an indication of the waste exhibiting the characteristic of ignitability, corrosivity, or reactivity (EPA hazardous waste numbers of D001, D002, or D003)?	☐	☑
Is the physical form of the waste inconsistent with the Waste Stream Description or the Waste Matrix Code?	☐	☑
CH or RH TRAMPAC		
Are there heat-sealed bags (unvented) GREATER than 4 liters and LESS than 390 square inches in the waste, or heat sealed bags not authorized in the RH TRUCON Code?	☐	☑
Were there Non-approved Closure Methods used on liner bags or inner bags greater than 4 liters?	☐	☑
Are there sealed containers GREATER than 4 liters?	☐	☑
Are there indications of inadequate protection for heavy and/or sharp objects?	☐	☑

Comments: N/A

RTR Operator:

Eric Lyles	[signature]	08/22/12
Print Name	Signature	Date

NDA 2000 Assay Report

Item Information

Item ID:	S794448	Count Sequence Number:	14387
Operator:	DCLTD231\Operator		
Assay Start:	8/23/2012 1:37:57 PM		
Description 1:	2LANDA1039		
Description 2:	N/A		
Location:	LANL TA-54		
Comment:	AK-6		
Matrix Type:	Homo Sol. S3000		
Container Type:	Lead-Lined		
Weight:	Net: 90.4 kg	Net:	90.4 kg
Container:	Volume: 208.0 l	Full:	50.0 %
Density:	0.870 kg /l		

System Configuration

Counter:	HENC #2
Count Type:	Lead-Lined
Collimator/Geometry Setting:	All Banks on GEO - 0

Errors quoted at 1.000 sigma

Radioassay Data Sheet

Engine Version: MMRes. Cmb. V1.2

Count Sequence Number: 14387
Assay Instrument: HENC #2
Analysis Method: CCP-TP-063 v 14
Item ID: S794448

Batch Number: 2LANDA1039
Location: LANL TA-54
Software Version: NDA 2000 V.4.0
Analysis Date: 8/23/2012

Net Weight	90400.0 g		
Pu mass	2.08E+000	+-	4.57E-001 g
TRU Alpha Activity	1.08E+001	+-	2.80E+000 Ci
TRU Activity Concentration	1.20E+005	+-	3.09E+004 nCi/g
Pu-239 Equivalent Activity	1.08E+001	+-	2.80E+000 Ci
Pu-239 FGE	1.91E+000	+-	4.52E-001 g
Decay heat	3.61E-001	+-	9.34E-002 W

Nuclide	Mass g	Activity Ci	Activity Uncert. Ci	MDA Ci
SR90	<LLD	<LLD	0.00E+000	0.00E+000
CS137	<LLD	<LLD	0.00E+000	3.81E-007
U233	<LLD	<LLD	0.00E+000	1.30E-002
U234	<LLD	<LLD	0.00E+000	0.00E+000
U235	0.00E+000	0.00E+000	0.00E+000	1.41E-005
NP237	1.98E-001	1.41E-004	3.43E-005	7.21E-006
PU238	9.07E-004	1.57E-002	4.49E-003	4.85E-003
U238	<LLD	<LLD	0.00E+000	2.02E-005
PU239	1.82E+000	1.14E-001	2.84E-002	3.53E-002
PU240	2.39E-001	5.50E-002	1.57E-002	1.70E-002
AM241	3.06E+000	1.06E+001	2.80E+000	9.02E-002
PU241	1.22E-002	1.27E+000	3.62E-001	3.91E-001
PU242	4.58E-003	1.82E-005	5.19E-006	0.00E+000

Errors quoted at 1.000 sigma

Operator: _____ Date: 8/28/12

ITR: _____ Date: 8.28.12

Automated Independent Technical Review

Count Sequence Number: 14387 Batch Number: 2LANDA1039
Counter ID: HENC #2
Container ID: S794448
Waste Matrix Code: Homo Sol. S3000 Count Type:
Sequence Type: Assay Date: 8/23/2012

Comments	Disposition
Section 1 - Add-A-Source Analysis Add-a-Source WARNINGS: Add-a-Source correction factor is less than one.	OK
Section 2 - Passive Neutron Analysis Analysis Status: No errors. Ones Rate Analysis complete with warnings. - Error calculating the Ones Rate Pu-240 Effective MDA.	OK Not data affecting.
Section 3 - Data Combiner Analysis Override enabled; Gamma data specified as input. Results taken from Quantitative Gamma data. Results comparison test passed.	Results taken from quantitative gamma data.
Section 4 - MGA Analysis Results are marked as invalid.	Isotopic analysis failed. AK isotopics applied. The AK information utilized was provided by Steve Schafer, AKE, and consists of data from CCP-AK-LANL-006, AK Source Document M237. MT-52.
Section 5 - Gamma Analysis Analysis Status: No errors.	OK
Miscellaneous	No additional nuclides contributing to 95% of the radiological hazard identified.

Expert Review by: [signature] Date: 8/28/12

Attachment 4 – Flammable Gas Analysis Form

SCO 1049 Add 4 - Win XP SP3/Win 7 SP1
Excel 2003/2007/2010

Waste Container ID: **S794448**

BDR Number: **LA12FG12027**

Sampling Date: **8/29/2012**

CAS NUMBER	COMPOUND	Measured ppmv	Reporting Flag
1333-74-0	Hydrogen	163.68	
74-82-8	Methane	9.63	U
67-56-1	Methanol	N/A	U
60-29-7	Ethyl Ether	N/A	U
75-35-4	1,1-Dichloroethylene	N/A	U
67-64-1	Acetone	N/A	U
75-34-3	1,1-Dichloroethane	N/A	U
156-59-2	cis-1,2-Dichloroethene	N/A	U
78-93-3	Methyl ethyl ketone	N/A	U
110-82-7	Cyclohexane	N/A	U
71-43-2	Benzene	N/A	U
107-06-2	1,2-Dichloroethane	N/A	U
71-36-3	1-Butanol	N/A	U
108-10-1	Methyl isobutyl ketone	N/A	U
108-88-3	Toluene	N/A	U
108-90-7	Chlorobenzene	N/A	U
100-41-4	Ethylbenzene	N/A	U
108-38-3/106-42-3	m- and p-Xylene	N/A	U
95-47-6	o-Xylene	N/A	U
108-67-8	1,3,5-Trimethylbenzene	N/A	U
95-63-6	1,2,4-Trimethylbenzene	N/A	U

CAS Number	IDENTIFIED TIC COMPOUND	Est. Amount ppmv
N/A	N/A	N/A
N/A	N/A	N/A
N/A	N/A	N/A
N/A	N/A	N/A
N/A	N/A	N/A
N/A	N/A	N/A
N/A	N/A	N/A
N/A	N/A	N/A

Quantitation Report (QT Reviewed)

InstName : FGA Unit 12

Data Path : C:\msdchem\1\DATA\120829c\
Data File : S794448.D
Acq On : 29 Aug 2012 1:21 pm (#1); 29 Aug 2012 1:20 pm (#2)
Operator : GR
Sample :
Misc : 55 GALLON DRUM THROUGH FILTER. (Sig #1); (Sig #2)
ALS Vial : 1 Sample Multiplier: 1

Quant Time: Aug 29 13:25:38 2012
Quant Method : C:\msdchem\1\METHODS\H2-CH4.M
Quant Title : Flammable Gas Analysis for Transportation Only
QLast Update : Thu Jul 26 11:16:14 2012
Response via : Initial Calibration

Compound	R.T.	QIon	Response	Conc	Units	Dev(Min)
Target Compounds						Qvalue
1) Hydrogen	1.880	GC1	45468	163.68	ppmv	100

(#) = qualifier out of range (m) = manual integration (+) = signals summed

35

Attachment 4 – Flammable Gas Analysis Form

SCO 1049 Add 4 - Win XP SP3/Win 7 SP1
Excel 2003/2007/2010

Waste Container ID: **S794448**

BDR Number: **LA12FG12027**

Sampling Date: **8/29/2012**

CAS NUMBER	COMPOUND	Measured ppmv	Reporting Flag
1333-74-0	Hydrogen	163.68	
74-82-8	Methane	9.63	U
67-56-1	Methanol	N/A	U
60-29-7	Ethyl Ether	N/A	U
75-35-4	1,1-Dichloroethylene	N/A	U
67-64-1	Acetone	N/A	U
75-34-3	1,1-Dichloroethane	N/A	U
156-59-2	cis-1,2-Dichloroethene	N/A	U
78-93-3	Methyl ethyl ketone	N/A	U
110-82-7	Cyclohexane	N/A	U
71-43-2	Benzene	N/A	U
107-06-2	1,2-Dichloroethane	N/A	U
71-36-3	1-Butanol	N/A	U
108-10-1	Methyl isobutyl ketone	N/A	U
108-88-3	Toluene	N/A	U
108-90-7	Chlorobenzene	N/A	U
100-41-4	Ethylbenzene	N/A	U
108-38-3/106-42-3	m- and p-Xylene	N/A	U
95-47-6	o-Xylene	N/A	U
108-67-8	1,3,5-Trimethylbenzene	N/A	U
95-63-6	1,2,4-Trimethylbenzene	N/A	U

CAS Number	IDENTIFIED TIC COMPOUND	Est. Amount ppmv
N/A	N/A	N/A
N/A	N/A	N/A
N/A	N/A	N/A
N/A	N/A	N/A
N/A	N/A	N/A
N/A	N/A	N/A
N/A	N/A	N/A
N/A	N/A	N/A

S802853

PLEASE READ INSTRUCTIONS ON BACK CAREFULLY

H-7 Waste Management
Ext 6095 MS-592

LASL RADIOACTIVE SOLID WASTE DISPOSAL RECORD FORM

1. FORM NUMBER	2. DATE (M M D D Y Y)	3. RETRIEVABLE SERIAL NO.	4. ORIGIN OF WASTE: GROUP	TA	BLDG.	WING	ROOM	5. WASTE CODE
S 8 0 2853	0 5 1 2 8 0	0 0 6 2 3 0	C M B 1 1	55	P F 4		4 3 2	A 2 5

6. WASTE DESCRIPTION:

7. NUMBERS OF WASTE PACKAGES: PLASTIC BAGS	CARD-BOARD BOXES	DRUMS NO.	DRUMS GAL.	WOODEN CRATES NO.	WOODEN CRATES VOLUME - ft³	8. GROSS VOLUME (M = METER³, F = FEET³, G = GALLON)	UNITS	9. PACKAGE RADIATION AT: SURFACE MR/HR	1 METER MR/HR
		1	55			2	M	8	1

10. GROSS WEIGHT	UNITS (K = KILOGRAM, P = POUND, T = TON)	11. ADDITIONAL DESCRIPTION OF PACKAGING AND PACKAGING MATERIALS
1650	K	

12. RADIONUCLIDE CONTENT: NUCLIDE	AMOUNT	±	UNITS (C = CURIE, M = GRAM)	ERROR ON AMOUNT	±	AMOUNT DETERMINED BY (A = ANALYSIS, M = MEASUREMENT, E = ESTIMATE)	SS MATERIALS WRITEOFF: ACCOUNT	PROJECT CODE
PU 52	265	E +0	M		E	M	741	309
PU 54	297	E +0	M		E	M	741	309
		E			E			
		E			E			

Ronald T. Corbett — WASTE GENERATOR
Signature certifies that waste is in accordance with applicable disposal requirements.

Co. E. H. Lanier 5/14/80 — H-1 AREA REPRESENTATIVE
Signature certifies that waste package or shipment is safe to handle and transport.

Chas Hodge R.C. — ~~GROUP LEADER (AS NECESSARY)~~

13. DATE DISPOSED (M M D D Y Y)	14. DISPOSAL/STORAGE LOCATION: AREA	SHAFT	PIT	POST(S)	LAYER	POS.	15. SHAFT SURFACE DOSE MR/HR
0 5 2 0 8 0	G		P1	10-11	4	E	

10-79

H-7 WASTE MANAGEMENT REPRESENTATIVE _____

Attachment 2 – CCP Radiography Data Sheet

Section 1: General Information	
☑ RTR Examination ☐ RTR Replicate Scan ☐ RTR Independent Observation	
Site ID:	LANL
Batch Number:	LA-HERTR-12-0024
Examination Date:	03/20/12
Waste Container ID:	S802853
Video/Audio Recorded Media Number:	LA-HERTR-12-0024 A
Procedure and Revision No.:	CCP-TP-053 Rev. 11
NCR(s) associated with the container? (e.g., Prohibited Items)	EL 3/22/12 EL 3/22/12 ☑ NO ☐ YES EL 3/22/12 EL 3/22/12 NCR No.: ~~N/A~~ NCR-LANL-0617-12 NCR No.: N/A

Section 2: Waste Container Data	
Container Type:	55 GALLON DRUM
TRUCON Code:	LA226
Waste Matrix Code:	S3150
Waste Stream I.D.:	LA-CIN01.001
Waste Container Weights:	Gross Wt: 162.5 ~~EL 3/26/12~~ kg. Tare Wt: ~~50.7~~ 52.7 EL 3/26/12 kg. Net Wt: ~~111.8~~ 109.8 EL 3/26/12 EL 3/26/12 kg.
Rigid Liner and Liner Vent Description: (e.g., "90 mil liner – NO Lid" or "NO Liner")	Lead lined drum no Liner EL 3/22/12
Number of Layers of Confinement:	Appears to be 1 layer
Volume Utilization Percentage:	85 %

Attachment 2 – CCP Radiography Data Sheet (Continued)

Page 2 of 3

Waste Container ID: S802853

Section 3: Container Inventory and Comments (Detailed descriptions)
Metal cans with material
Plastic bags
Solidified Homogenous solids

Section 4: Packaging Material and Waste Material Parameters	
Packaging Material:	**Estimated Weight (kg)**
Steel (ST):	27.7 EL 3/26/12
Plastics (PP): Plastic Liner bag EL 3/26/12	~~0.0~~ 2.0 EL 3/26/12
Others: Lead lined drum	23.0 EL 3/26/12
Total Packaging Weight:	~~50.7~~ 52.7 EL 3/26/12
Waste Material Parameter:	**Estimated Weight (kg)**
Iron-based Metal / Alloys (IM):	12.0
Aluminum-based Metals / Alloys (AM):	
Other Metals (OM):	
Other Inorganic Materials (OI):	
Cellulosics (C):	
Rubber (R):	
Plastics (waste materials) (XPM):	4.0
Organic Matrix (OR):	EL 3/26/12
Inorganic Matrix (IN):	~~95.8~~ 93.8 EL 3/26/12
Soils (S):	EL 3/26/12
Total WMP Weight:	~~111.8~~ 109.8 EL 3/26/12

Attachment 2 – CCP Radiography Data Sheet (Continued)

Waste Container ID: S802853

Section 5 – RTR Summary (Questions answered YES will be explained in the Comments)	Yes	No
Is there observable liquid?	☐	☑
Is there any observable liquid in internal containers, more than 60 milliliters or 3 percent by volume, whichever is greater?	☐	☑
Is the total volume of observable liquid in the outermost container **GREATER** than 1% of the container?	☐	☑
Is there observable liquid in payload containers with an EPA Hazardous Waste Number of U134?	☐	☑
Is there an indication of non-radionuclide pyrophoric materials, such as elemental potassium?	☐	☑
Is there an indication of hazardous wastes not occurring as co-contaminants with TRU mixed wastes (non-mixed hazardous wastes)?	☐	☑
Is there an indication of wastes incompatible with backfill, seal and panel closures materials, container and packaging materials, shipping container materials, or other wastes (i.e., waste does NOT match TRUCON Code[s])?	☐	☑
Is there an indication of wastes containing explosives or compressed gases?	☐	☑
Is there an indication of PCBs liquids?	☐	☑
Is there an indication of the waste exhibiting the characteristic of ignitability, corrosivity, or reactivity (EPA hazardous waste numbers of D001, D002, or D003)?	☐	☑
Is the physical form of the waste inconsistent with the Waste Stream Description or the Waste Matrix Code?	☐	☑
Section 6 – RH TRAMPAC		
Are there heat-sealed bags (unvented) GREATER than 4 liters and LESS than 390 square inches in the waste, or heat sealed bags not authorized in the RH TRUCON Code?	☐	☑
Were there Non-approved Closure Methods used on liner bags or inner bags greater than 4 liters?	☐ EL 3/22/12	☑
Are there sealed containers GREATER than 4 liters?	~~☐~~	~~☑~~ EL 3/22/12
Are there indications of inadequate protection for heavy and/or sharp objects?	☐	☑

Comments: This drum contains metal cans with material which may require additional Project Office review.
NCR-LANL-0612-12 EL 3/22/12

RTR Operator:

Print Name	Signature	Date
Eric Lyles	[signature]	03/20/12
	[signature]	3/22/12
	[signature]	3/26/12

```
|-----------------------------------------------------------------------|
|                          NDA 2000 Assay Report                        |
|-----------------------------------------------------------------------|

*************************    Item Information    ************************

Item ID:            S802853            Count Sequence Number:  15536
Operator:           DCLTD231\Operator
Assay Start:        4/15/2013   3:19:54 PM
Description 1:      2LANDA1139
Description 2:      N/A
Location:           LANL TA-54
Comment:            AK-6
Matrix Type:        Homo Sol. S3000
Container Type:     Lead-Lined
Weight:             Net:       110.0   kg        Net:   110.0 kg
Container:          Volume:    208.0   l        Full:    85.0 %
Density:                         0.620 kg /l


************************   System Configuration   ************************

Counter:                        HENC #2
Count Type:                     Lead-Lined
Collimator/Geometry Setting:    All Banks on GEO -  0

Errors quoted at  1.000 sigma
```

Radioassay Data Sheet

Engine Version: MMRes. Cmb. V1.2

Count Sequence Number:	15536	Batch Number:	2LANDA1139
Assay Instrument:	HENC #2	Location:	LANL TA-54
Analysis Method:	CCP-TP-063 v 14	Software Version:	NDA 2000 V.4.0
Item ID:	S802853	Analysis Date:	4/15/2013

Net Weight	110000.0 g		
Pu mass	1.42E+001	+-	4.82E+000 g
TRU Alpha Activity	2.76E+001	+-	6.19E+000 Ci
TRU Activity Concentration	2.51E+005	+-	5.63E+004 nCi/g
Pu-239 Equivalent Activity	2.77E+001	+-	6.19E+000 Ci
Pu-239 FGE	1.31E+001	+-	4.79E+000 g
Decay heat	9.21E-001	+-	2.07E-001 W

Nuclide	Mass g	Activity Ci	Activity Uncert. Ci	MDA Ci
SR90	<LLD	<LLD	0.00E+000	0.00E+000
CS137	<LLD	<LLD	0.00E+000	1.15E-006
U233	<LLD	<LLD	0.00E+000	1.82E-002
U234	<LLD	<LLD	0.00E+000	0.00E+000
U235	0.00E+000	0.00E+000	0.00E+000	1.88E-005
NP237	5.10E-001	3.65E-004	7.66E-005	1.03E-005
PU238	3.88E-003	6.71E-002	2.68E-002	4.78E-003
U238	<LLD	<LLD	0.00E+000	2.91E-005
PU239	1.28E+001	8.06E-001	3.01E-001	5.74E-002
PU240	1.26E+000	2.90E-001	1.16E-001	2.07E-002
AM241	7.62E+000	2.65E+001	6.18E+000	2.73E-001
PU241	5.16E-002	5.37E+000	2.14E+000	3.82E-001
PU242	1.84E-002	7.31E-005	2.92E-005	0.00E+000

Errors quoted at 1.000 sigma

Operator: D. R. [illegible] Date: 4-17-13

ITR: [illegible] Date: 4/18/13

Automated Independent Technical Review

Count Sequence Number: 15536 Batch Number: 2LANDA1139
Counter ID: HENC #2
Container ID: S802853
Waste Matrix Code: Homo Sol. S3000 Count Type:
Sequence Type: Assay Date: 4/15/2013

Comments	Disposition
Section 1 - Add-A-Source Analysis Add-a-Source WARNINGS: Add-a-Source correction factor is less than one.	Ok
Section 2 - Passive Neutron Analysis Analysis Status: No errors. Ones Rate Analysis complete with warnings. - Error calculating the Ones Rate Pu-240 Effective MDA.	Ok Not data affecting.
Section 3 - Data Combiner Analysis Override enabled; Gamma data specified as input. Results taken from Quantitative Gamma data. Results comparison test passed.	Results taken from quantitative gamma data.
Section 4 - MGA Analysis Results are marked as invalid.	MGA analysis failed. AK isotopics applied. The AK information utilized was provided by Steve Schafer, AKE, and consists of data from CCP-AK-LANL-006, AK Source Document M237. MT-54,52.
Section 5 - Gamma Analysis Analysis Status: No errors.	Ok
Miscellaneous	No additional nuclides contributing to 95% of the radiological hazard identified.

Expert Review by: Sherri Chamber Date: 4-17-13

Quantitation Report (QT Reviewed)

InstName : FGA Unit 12

Data Path : C:\msdchem\1\DATA\140109c\
Data File : S802853.D
Acq On : 9 Jan 2014 1:52 pm (#1); 9 Jan 2014 1:50 pm (#2)
Operator : NW
Sample :
Misc : 55 GALLON DRUM THROUGH FILTER, NUCFIL-072 (Sig #1); (Sig #2)
ALS Vial : 1 Sample Multiplier: 1

Quant Time: Jan 09 13:55:59 2014
Quant Method : C:\msdchem\1\METHODS\H2-CH4.M
Quant Title : Flammable Gas Analysis for Transportation Only
QLast Update : Thu May 23 08:37:45 2013
Response via : Initial Calibration

Compound	R.T.	QIon	Response	Conc	Units	Dev(Min)
Target Compounds						Qvalue
1) Hydrogen	1.913	GC1	122435m	429.22	ppmv	

(#) = qualifier out of range (m) = manual integration (+) = signals summed

Waste Container ID: **S802853**

BDR Number: **LA14FG12004**

Sampling Date: **1/9/2014**

CAS NUMBER	COMPOUND	Measured ppmv	Reporting Flag
1333-74-0	Hydrogen	429.22	
74-82-8	Methane	6.56	U
67-56-1	Methanol	N/A	U
60-29-7	Ethyl Ether	N/A	U
75-35-4	1,1-Dichloroethylene	N/A	U
67-64-1	Acetone	N/A	U
75-34-3	1,1-Dichloroethane	N/A	U
156-59-2	cis-1,2-Dichloroethene	N/A	U
78-93-3	Methyl ethyl ketone	N/A	U
110-82-7	Cyclohexane	N/A	U
71-43-2	Benzene	N/A	U
107-06-2	1,2-Dichloroethane	N/A	U
71-36-3	1-Butanol	N/A	U
108-10-1	Methyl isobutyl ketone	N/A	U
108-88-3	Toluene	N/A	U
108-90-7	Chlorobenzene	N/A	U
100-41-4	Ethylbenzene	N/A	U
108-38-3/106-42-3	m- and p-Xylene	N/A	U
95-47-6	o-Xylene	N/A	U
108-67-8	1,3,5-Trimethylbenzene	N/A	U
95-63-6	1,2,4-Trimethylbenzene	N/A	U

CAS Number	IDENTIFIED TIC COMPOUND	Est. Amount ppmv
N/A	N/A	N/A
N/A	N/A	N/A
N/A	N/A	N/A
N/A	N/A	N/A
N/A	N/A	N/A
N/A	N/A	N/A
N/A	N/A	N/A
N/A	N/A	N/A

S816357

1 2 7 2 1 1 1 1

Radioactive Solid Waste Disposal Recor

DrumID: [redacted] 010128

31-Jul-96

RSWD: S816357

Old RSWD:

Date Sealed: 7/7/81

Origin of Waste

Group: CMB11

TA: 55

Building: PF4

Room: 432

Program Code:

Waste Code: A25

Waste Desc: LEACHED SOLIDS

Gross Weight : 182.7 kg

Additional Description:

Initials: JT

Entry Date: 7/31/96

re-entered 7-17-98

Discardable Waste Log Sheet

DrumID: 10128

Item#	ItemID	Net (kg)	Matrix	M Code	NM	MT	Auth	Remarks
1	IXFS-388-FB	29.99	NITRATE SALTS		5.17	52	5/11	
2	IXFS-389-F1	30.36	NITRATE SALTS		10.64	52	5/11	
3	IXFS-390-F1	30.09	NITRATE SALTS		2.17	52	5/11	
4	IXFS-391-F1	13.64	NITRATE SALTS		1.72	51	5/11	
5	IXFS-392-FA	15.45	NITRATE SALTS		2.3	52	5/11	
		119.53 kg						

1 0 7 2 1 3 1 2

1 2 7 2 1 1 1 1

PLEASE READ INSTRUCTIONS ON BACK CAREFULLY

LASL RADIOACTIVE SOLID WASTE DISPOSAL RECORD FORM

H-7 Waste Management
Ext 6095 MS-592

1. FORM NUMBER
S 8 16357

2. DATE (M M D D Y Y)	3. RETRIEVABLE SERIAL NO.	4. ORIGIN OF WASTE: GROUP	TA	BLDG.	WING	ROOM	5. WASTE CODE
07 07 81	000774	CMB-11	55	PF4		432	A25

10/28

6. WASTE DESCRIPTION
Leached Solids

7. NUMBERS OF WASTE PACKAGES: PLASTIC BAGS	CARD BOARD BOXES	DRUMS NO.	DRUMS GAL.	WOODEN CRATES NO.	WOODEN CRATES VOLUME-ft³
		155			

8. GROSS VOLUME	UNITS (M = METER³, F = FEET³, G = GALLON)
24	

9. PACKAGE RADIATION AT: SURFACE MR/HR	1 METER MR/HR
18	6

10. GROSS WEIGHT	UNITS (K = KILOGRAM, P = POUND, T = TON)
1827	K

11. ADDITIONAL DESCRIPTION OF PACKAGING AND PACKAGING MATERIALS

12. RADIONUCLIDE CONTENT: NUCLIDE	AMOUNT		±	UNITS (C = CURIE, M = GRAM)	ERROR ON AMOUNT		±	AMOUNT DETERMINED BY (A = ANALYSIS, M = MEASUREMENT, E = ESTIMATE)	SS MATERIALS WRITEOFF: ACCOUNT	PROJECT CODE
Pu 52	2.2	E	41	M		E	M		741	39
		E				E				
		E				E				
		E				E				
		E				E				
		E				E				

R. Scarborough
WASTE GENERATOR
Signature certifies that waste is in accordance with all applicable disposal requirements.

H-1 AREA REPRESENTATIVE
Signature certifies that waste package or shipment is safe to handle and transport.

Faye Howe
~~GROUP LEADER (IF NECESSARY)~~

13. DATE DISPOSED (M M D D Y Y)

14. DISPOSAL/STORAGE LOCATION: AREA	SHAFT	PIT	POST(S)	LAYER	POS

15. SHAFT SURFACE DOSE MR/HR

H-7 WASTE MANAGEMENT REPRESENTATIVE _____

HS-E 7-1A(10/80)

DISCARDABLE SOLIDS

☑ Leached ☐ N-Comb. ☐ Comb. ☐ PN

Seal # DRM 374 10128 Waste Code A-25 Date

RSWD # 6357 Project # 309 Transaction #

Item #	Ident.	From Room Box	Net Wt. kg	Matrix	g Pu	%	HT	Generator Name	Waste Mgmt. Personnel	Auth. Pg/Ln	Date
1	IXFS 388 FR	G-46	29.99 kg	Nitrate Salts	5.17 g	6%	52	JJ	RON	5 / 11	4/25
2	IXFS 389 F1	"	30.36	"	10.64	6%	52	JJ		5 / 11	6/25
3	IXFS 390 F1	"	30.09	"	2.17	6%	52	JJ		5 / 11	4/26
4	IXFS-391-F1	"	13.64	"	1.72	6%	51	JJ		5 / 11	4/29
5	IXFS-392-F A	"	15.45	"	2.30	6%	52	CJS		5 / 11	7/1
6											
7											
8											
9											
10											

HT	MASS SNM	NET WEIGHT	ACCOUNTABILITY CHECK
52	22.0 g	119.53 kg	

Verified Value 22.0 g

Bulk Weight 182.73 Kg

CB11-

CCP Radiography Data Sheet

Section 1: General Information	
[X] RTR Examination [ ] RTR Replicate Scan [ ] RTR Independent Observation	
Site ID:	LANL
Batch Number:	LA-HERTR-12-0105
Examination Date:	9/28/2012
Waste Container ID:	S816357
Video/Audio Recorded Media Number:	LA-HERTR-12-0105 A&B
Procedure and Revision No.:	CCP-TP-053 Rev. 12
NCR(s) associated with the container? (e.g., Prohibited Items)	[X] No [ ] Yes NCR No.: N/A NCR No.: N/A

Section 2: Waste Container Data	
Container Type:	55 Gallon Drum
TRUCON Code:	LA226
Waste Matrix Code:	S3150
Waste Stream I.D.:	LA-CIN01.001
Waste Container Weights:	Gross Wt.: 189.0 kg Tare Wt.: 58.1 kg Net Wt.: 130.9 kg
Rigid Liner and Liner Vent Description:	Liner: [ ] No [X] Yes Lid: [ ] No [X] Yes Type: [ ] 30-mil [X] 90-mil [ ] 110-mil [ ] 125-mil Vented: [ ] No [X] Yes [ ] N/A Punctured: EL 10/2/12 [X] No ~~[X]~~ Yes EL 10/2/12 Mechanical Vent: [ ] No [X] Yes Fiberboard Liner: [X] No [ ] Yes Lead Lined: [ ] No [X] Yes
Number of Layers of Confinement:	Appears to be 1 layer
Volume Utilization Percentage:	50 %

CCP Radiography Data Sheet

Waste Container ID: S816357

Section 3: Container Inventory and Comments (Detailed descriptions)

IM:

AM:

OM:

OI:

C:

R:

XPM: Plastic bag

OR:

IN: Homogeneous solids

S:

Section 4: Packaging Material and Waste Material Parameters

Packaging Material:	**Estimated Weight (kg)**
Steel (ST):	27.7
Plastics (PP): 90 MIL. Liner with Liner Lid	7.4
Other: Lead Lined (LP)	23.0
Total Packaging Weight	58.1
Waste Material Parameter:	**Estimated Weight (kg)**
Iron-based Metal / Alloys (IM):	
Aluminum-based Metals / Alloys (AM):	
Other Metals (OM):	
Other Inorganic Materials (OI)	
Cellulosics (C):	
Rubber (R):	
Plastics (waste materials) (XPM):	2.0
Organic Matrix (OR):	
Inorganic Matrix (IN):	128.9
Soils (S):	
Total WMP Weight:	130.9

CCP Radiography Data Sheet

Waste Container ID: S816357

Section 5: RTR Summary (Questions answered "Yes" will be explained in the Comment block, except for Question 1)	
Is there observable liquid?	[X] Yes [ ] No
Is there any observable liquid in internal containers, more than 60 milliliters or 3 percent by volume, whichever is greater?	[ ] Yes [X] No
Is the total volume of observable liquid in the outermost container GREATER than 1% of the container?	[ ] Yes [X] No
Is there observable liquid in payload containers with an EPA Hazardous Waste Number of U134?	[ ] Yes [X] No
Is there an indication of non-radionuclide pyrophoric materials, such as elemental potassium?	[ ] Yes [X] No
Is there an indication of hazardous wastes not occurring as co-contaminants with TRU mixed wastes (non-mixed hazardous wastes)?	[ ] Yes [X] No
Is there an indication of wastes incompatible with backfill, seal and panel closures materials, container and packaging materials, shipping container materials, or other wastes (i.e., waste does NOT match TRUCON Code[s])?	[ ] Yes [X] No
Is there an indication of wastes containing explosives or compressed gases?	[ ] Yes [X] No
Is there an indication of PCBs liquids?	[ ] Yes [X] No
Is there an indication of the waste exhibiting the characteristic of ignitability, corrosivity, or reactivity (EPA Hazardous Waste Numbers of D001, D002, or D003)?	[ ] Yes [X] No
Is the physical form of the waste inconsistent with the Waste Stream Description or the Waste Matrix Code?	[ ] Yes [X] No
CH or RH TRAMPAC	
Are there heat-sealed bags (unvented) GREATER than 4 liters and LESS than 390 square inches in the waste, or heat sealed bags not authorized in the RH TRUCON Code?	[ ] Yes [X] No
Were there Non-approved Closure Methods used on liner bags or inner bags greater than 4 liters?	[ ] Yes [X] No
Are there sealed containers GREATER than 4 liters?	[ ] Yes [X] No
Are there indications of inadequate protection for heavy and/or sharp objects?	[ ] Yes [X] No

Comments:Per CCP-SO-LANL-55 Inconsistencies associated with these packaging configurations (Rigid liners with or without lids) will not disqualify the container from meeting the waste stream description.

RTR Operator:

Eric Lyles		9/28/2012 10/2/12
Print Name	Signature	Date

NDA 2000 Assay Report

Item Information

Item ID:	S816357	Count Sequence Number:	14765
Operator:	DCLTD231\Operator		
Assay Start:	10/29/2012 12:38:22 PM		
Description 1:	2LANDA1072		
Description 2:	N/A		
Location:	LANL TA-54		
Comment:	AK-6		
Matrix Type:	Homo Sol. S3000		
Container Type:	Lead-Lined		
Weight:	Net: 131.0 kg	Net:	131.0 kg
Container:	Volume: 208.0 l	Full:	50.0 %
Density:	1.260 kg /l		

System Configuration

Counter:	HENC #2
Count Type:	Lead-Lined
Collimator/Geometry Setting:	All Banks on GEO - 0

Errors quoted at 1.000 sigma

Radioassay Data Sheet

Engine Version: MMRes. Cmb. V1.2

Count Sequence Number: 14765
Assay Instrument: HENC #2
Analysis Method: CCP-TP-063 v 14
Item ID: S816357

Batch Number: 2LANDA1072
Location: LANL TA-54
Software Version: NDA 2000 V.4.0
Analysis Date: 10/29/2012

Net Weight	131000.0 g	
Pu mass	2.33E+001 +-	1.18E+001 g
TRU Alpha Activity	3.58E+001 +-	1.04E+001 Ci
TRU Activity Concentration	2.73E+005 +-	7.93E+004 nCi/g
Pu-239 Equivalent Activity	3.58E+001 +-	1.04E+001 Ci
Pu-239 FGE	2.21E+001 +-	1.18E+001 g
Decay heat	1.19E+000 +-	3.47E-001 W

Nuclide	Mass g	Activity Ci	Activity Uncert. Ci	MDA Ci
SR90	<LLD	<LLD	0.00E+000	0.00E+000
CS137	<LLD	<LLD	0.00E+000	1.82E-006
U233	<LLD	<LLD	0.00E+000	3.11E-002
U234	<LLD	<LLD	0.00E+000	0.00E+000
U235	0.00E+000	0.00E+000	0.00E+000	3.47E-005
NP237	8.44E-001	6.03E-004	1.73E-004	1.73E-005
PU238	2.14E-003	3.71E-002	2.07E-002	2.52E-003
U238	<LLD	<LLD	0.00E+000	3.96E-005
PU239	2.18E+001	1.37E+000	7.40E-001	9.35E-002
PU240	1.40E+000	3.21E-001	1.79E-001	2.18E-002
AM241	9.80E+000	3.40E+001	1.04E+001	4.30E-001
PU241	2.80E-002	2.92E+000	1.63E+000	1.98E-001
PU242	4.66E-003	1.85E-005	1.03E-005	0.00E+000

Errors quoted at 1.000 sigma

Operator: [signature] Date: 10/31/12

ITR: [signature] Date: 11.7.12

Automated Independent Technical Review

Count Sequence Number: 14765 Batch Number: 2LANDA1072
Counter ID: HENC #2
Container ID: S816357
Waste Matrix Code: Homo Sol. S3000 Count Type:
Sequence Type: Assay Date: 10/29/2012

Comments	Disposition
Section 1 - Add-A-Source Analysis Add-a-Source WARNINGS: Add-a-Source correction factor is less than n-sigma * the correction factor error.	Ok
Section 2 - Passive Neutron Analysis Analysis Status: No errors. Ones Rate Analysis complete with warnings. - Error calculating the Ones Rate Pu-240 Effective MDA.	Ok Not data affecting.
Section 3 - Data Combiner Analysis Override enabled; Gamma data specified as input. Results taken from Quantitative Gamma data. Results comparison test passed.	Results taken from quantitative gamma data.
Section 4 - MGA Analysis Results are marked as invalid.	MGA analysis failed. AK isotopics applied. The AK information utilized was provided by Steve Schafer, AKE, and consists of data from CCP-AK-LANL-006, AK Source Document M237. MT-52.
Section 5 - Gamma Analysis Analysis Status: No errors.	Ok
Miscellaneous	No additional nuclides contributing to 95% of the radiological hazard identified.

Expert Review by: Sheri Chamberlin Date: 10-30-12

Quantitation Report (QT Reviewed)

InstName : FGA Unit 12

Data Path : C:\msdchem\1\DATA\121213c\
Data File : S816357.D
Acq On : 13 Dec 2012 1:09 pm (#1); 13 Dec 2012 1:08 pm (#2)
Operator : NW
Sample :
Misc : 55 GALLON DRUM THROUGH FILTER (Sig #1); (Sig #2)
ALS Vial : 1 Sample Multiplier: 1

Quant Time: Dec 13 13:13:49 2012
Quant Method : C:\msdchem\1\METHODS\H2-CH4.M
Quant Title : Flammable Gas Analysis for Transportation Only
QLast Update : Thu Oct 04 08:07:46 2012
Response via : Initial Calibration

Compound	R.T.	QIon	Response	Conc	Units	Dev(Min)
Target Compounds						Qvalue
1) Hydrogen	1.930	GC1	10855m	38.43	ppmv	

(#) = qualifier out of range (m) = manual integration (+) = signals summed

23

~~27~~ 12-19-12 BA

Attachment 4 – Flammable Gas Analysis Form

SCO 1049 Add 4 - Win XP SP3/Win 7 SP1
Excel 2003/2007/2010

Waste Container ID: **S816357**

BDR Number: **LA12FG12053**

Sampling Date: **12/13/2012**

CAS NUMBER	COMPOUND	Measured ppmv	Reporting Flag
1333-74-0	Hydrogen	38.43	
74-82-8	Methane	9.63	U
67-56-1	Methanol	N/A	U
60-29-7	Ethyl Ether	N/A	U
75-35-4	1,1-Dichloroethylene	N/A	U
67-64-1	Acetone	N/A	U
75-34-3	1,1-Dichloroethane	N/A	U
156-59-2	cis-1,2-Dichloroethene	N/A	U
78-93-3	Methyl ethyl ketone	N/A	U
110-82-7	Cyclohexane	N/A	U
71-43-2	Benzene	N/A	U
107-06-2	1,2-Dichloroethane	N/A	U
71-36-3	1-Butanol	N/A	U
108-10-1	Methyl isobutyl ketone	N/A	U
108-88-3	Toluene	N/A	U
108-90-7	Chlorobenzene	N/A	U
100-41-4	Ethylbenzene	N/A	U
108-38-3/106-42-3	m- and p-Xylene	N/A	U
95-47-6	o-Xylene	N/A	U
108-67-8	1,3,5-Trimethylbenzene	N/A	U
95-63-6	1,2,4-Trimethylbenzene	N/A	U

CAS Number	IDENTIFIED TIC COMPOUND	Est. Amount ppmv
N/A	N/A	N/A
N/A	N/A	N/A
N/A	N/A	N/A
N/A	N/A	N/A
N/A	N/A	N/A
N/A	N/A	N/A
N/A	N/A	N/A
N/A	N/A	N/A

S823125

NONCERTIFIED TRU WASTE DRUM REPORT

Radioactive Solid Waste Disposal Record

Ret Serial Number (DrumID): 009725

RSWD Form Number: S823125
Old RSWD:
Date: 04/15/82

Origin of Waste

Group: CMB-11
TA: 55
Building: PF-4
Room/Wing: 432
Program Code:

Waste Description

Waste Code: A-26
Waste Description:
LEACHED SOLIDS

Additional Description:

The Noncertified TRU Waste Supplemental Data Sheet was not included in the data package.

Noncertified TRU Waste Drum Item Information

DrumID: 009725

Item No	ItemID	Process Status	Net Wt (kg)	Matrix	Meas Code	SNM (g)	MT	Auth (Pg/Ln)	Comments
1	IXFS541F1		10.000	EVAPORATOR SALTS		1.	52	5/11	
2	IXFS542F1		64.000	EVAPORATOR SALTS		9.	52	5/11	
3	IXFS543F1		98.000	EVAPORATOR BOTTOMS		6.	52	5/11	

Noncertified Waste Drum Material Summary

Gross Wt (kg): 236.

Material Type	SNM (grams)	Items Net Wt (kg)
52	16.	172.00
Totals	16.	172.00

1 7 7 2 0 3 0 1

PLEASE READ INSTRUCTIONS ON BACK CAREFULLY

LOS ALAMOS RADIOACTIVE SOLID WASTE DISPOSAL RECORD FORM

H-7 Waste Management
Ext 6095 MS-592

1. FORM NUMBER
S 8 2 3125

2. DATE (M M D D Y Y)	3. RETRIEVABLE SERIAL NO.	4. ORIGIN OF WASTE: GROUP	TA	BLDG.	BLDG	ROOM	5. WASTE CODE
04 15 82	009765	CMB11	55	P64		4312	9[illegible]

6. WASTE DESCRIPTION

Leached solids

7. NUMBERS OF WASTE PACKAGES: PLASTIC BAGS	CARD BOARD BOXES	DRUMS NO.	DRUMS GAL.	WOODEN CRATES NO.	WOODEN CRATES VOLUME-ft³
		1	55		

8. GROSS VOLUME	UNITS (M = METER³, F = FEET³, G = GALLON)
2	m

9. PACKAGE RADIATION AT: SURFACE MR/HR	1 METER MR/HR
<10	

10. GROSS WEIGHT	UNITS (K = KILOGRAM, P = POUND, T = TON)
2360	K

11. ADDITIONAL DESCRIPTION OF PACKAGING AND PACKAGING MATERIALS

12. RADIONUCLIDE CONTENT: NUCLIDE	AMOUNT		±	UNITS (C = CURIE, M = GRAM)	ERROR ON AMOUNT		±	AMOUNT DETERMINED BY: (A = ANALYSIS, M = MEASUREMENT, E = ESTIMATE)	SS MATERIALS WRITEOFF: ACCOUNT	PROJECT CODE
Pu 152	16	E	+1	m		E		m	741	309
		E				E				
		E				E				
		E				E				
		E				E				
		E				E				

Mary Ann David
WASTE GENERATOR
Signature certifies that waste is in accordance with all applicable disposal requirements.

H-1 AREA REPRESENTATIVE
Signature certifies that waste package or shipment is safe to handle and transport.

Mary A. David
GROUP LEADER (AS NECESSARY)

13. DATE DISPOSED (M M D D Y Y)

14. DISPOSAL/STORAGE LOCATION: AREA	SHAFT	PIT	POST(S)	LAYER	POS.

15. SHAFT SURFACE DOSE MR/HR

H-7 WASTE MANAGEMENT REPRESENTATIVE

HS-E 7-1A (10/81)

☒ Leached ☐ N-Comb. ☐ Comb. ☐ PN

Seal # ORM-9725 Waste Code A26 WP Date 4/15/82

RSWD # 3125 Project # 309 Transaction # 224574

Item #	Ident.	From Room Box	Net Wt. kg	Matrix	g Pu	%	MT	Generator Name	Waste Mgmt. Personnel	Auth. Pg/Ln	Date
1	IXFS 541 F1	G-465	10.0	EVAP. Solids	1.0	6	52	A. Martinez	MAD	5/11	4/15
2	IXFS 542 F1	G-465	64.0	↓	9.0	6	52	A. Martinez	↓	5/11	4/15
3	IXFS 543 F1	G-465	98.0	↓	6.0	6	52	A. Martinez	↓	5/11	4/15
4											
5											
6											
7											
8											
9											
10											

MT	MASS SNM	NET WEIGHT	ACCOUNTABILITY CHECK
52	16.0 g	172.0 KG	OK/P&Lass

Verified Value ——

Bulk Weight 236.0 KG

CMB11-COF-108

Attachment 2 – CCP Radiography Data Sheet

Section 1: General Information	
☑ RTR Examination ☐ RTR Replicate Scan ☐ RTR Independent Observation	
Site ID:	LANL
Batch Number:	LA-HERTR-12-0032
Examination Date:	04/09/12
Waste Container ID:	S823125
Video/Audio Recorded Media Number:	LA-HERTR-12-0032 C
Procedure and Revision No.:	CCP-TP-053 Rev. 11
NCR(s) associated with the container? (e.g., Prohibited Items)	☑ NO ☐ YES NCR No.: N/A NCR No.: N/A

Section 2: Waste Container Data	
Container Type:	55 GALLON DRUM
TRUCON Code:	LA226
Waste Matrix Code:	S3150
Waste Stream I.D.:	LA-CIN01.001
Waste Container Weights:	Gross Wt: 235.0 kg. Tare Wt: 52.7 kg. Net Wt: 182.3 kg.
Rigid Liner and Liner Vent Description: (e.g., "90 mil liner – NO Lid" or "NO Liner")	No Liner, lead lined drum
Number of Layers of Confinement:	Appears to be 1 layer
Volume Utilization Percentage:	95 %

Attachment 2 – CCP Radiography Data Sheet (Continued)

Page 2 of 3

Waste Container ID: S823125

Section 3: Container Inventory and Comments (Detailed descriptions)
Metal cans with material
Plastic bags
Solidified Homogenous solids

Section 4: Packaging Material and Waste Material Parameters		
Packaging Material:		Estimated Weight (kg)
Steel (ST):		27.7
Plastics (PP):	Plastic Liner Bag	2.0
Others:	Lead Liner	23.0
Total Packaging Weight:		52.7
Waste Material Parameter:		Estimated Weight (kg)
Iron-based Metal / Alloys (IM):		20.0
Aluminum-based Metals / Alloys (AM):		
Other Metals (OM):		
Other Inorganic Materials (OI):		
Cellulosics (C):		
Rubber (R):		
Plastics (waste materials) (XPM):		3.0
Organic Matrix (OR):		
Inorganic Matrix (IN):		159.3
Soils (S):		
Total WMP Weight:		182.3

Attachment 2 – CCP Radiography Data Sheet (Continued)

Page 3 of 3

Waste Container ID: S823125

Section 5: RTR Summary (Questions answered "YES" will be explained in the Comments block except for Question 1.)	Yes	No
Is there observable liquid?	☐	☑
Is there any observable liquid in internal containers, more than 60 milliliters or 3 percent by volume, whichever is greater?	☐	☑
Is the total volume of observable liquid in the outermost container **GREATER** than 1% of the container?	☐	☑
Is there observable liquid in payload containers with an EPA Hazardous Waste Number of U134?	☐	☑
Is there an indication of non-radionuclide pyrophoric materials, such as elemental potassium?	☐	☑
Is there an indication of hazardous wastes not occurring as co-contaminants with TRU mixed wastes (non-mixed hazardous wastes)?	☐	☑
Is there an indication of wastes incompatible with backfill, seal and panel closures materials, container and packaging materials, shipping container materials, or other wastes (i.e., waste does NOT match TRUCON Code[s])?	☐	☑
Is there an indication of wastes containing explosives or compressed gases?	☐	☑
Is there an indication of PCBs liquids?	☐	☑
Is there an indication of the waste exhibiting the characteristic of ignitability, corrosivity, or reactivity (EPA hazardous waste numbers of D001, D002, or D003)?	☐	☑
Is the physical form of the waste inconsistent with the Waste Stream Description or the Waste Matrix Code?	☐	☑
CH or RH TRAMPAC		
Are there heat-sealed bags (unvented) GREATER than 4 liters and LESS than 390 square inches in the waste, or heat sealed bags not authorized in the RH TRUCON Code?	☐	☑
Were there Non-approved Closure Methods used on liner bags or inner bags greater than 4 liters?	☐	☑
Are there sealed containers GREATER than 4 liters?	☐	☑
Are there indications of inadequate protection for heavy and/or sharp objects?	☐	☑

Comments: This drum contains metal cans with material which may require additional Project Office review.

RTR Operator:

Eric Lyles		04/09/12
Print Name	Signature	Date

NDA 2000 Assay Report

Item Information

Item ID:	S823125	Count Sequence Number:	13611
Operator:	DCLTD231\Operator		
Assay Start:	4/24/2012 12:10:23 PM		
Description 1:	2LANDA0979		
Description 2:	N/A		
Location:	LANL TA-54		
Comment:	AK-6, CIN01, Not Precision		
Matrix Type:	Homo Sol. S3000		
Container Type:	Lead-Lined		
Weight:	Net: 182.0 kg	Net:	182.0 kg
Container:	Volume: 208.0 l	Full:	95.0 %
Density:	0.920 kg /l		

System Configuration

Counter:	HENC #2
Count Type:	Item Count
Collimator/Geometry Setting:	All Banks on GEO - 0

Errors quoted at 1.000 sigma

Radioassay Data Sheet

Engine Version: MMRes. Cmb. V1.2

Count Sequence Number:	13611	Batch Number:	2LANDA0979
Assay Instrument:	HENC #2	Location:	LANL TA-54
Analysis Method:	CCP-TP-063 v 13	Software Version:	NDA 2000 V.4.0
Item ID:	S823125	Analysis Date:	4/24/2012

Net Weight	182000.0 g		
Pu mass	1.99E+001	+-	4.65E+000 g
TRU Alpha Activity	1.09E+001	+-	2.56E+000 Ci
TRU Activity Concentration	6.01E+004	+-	1.41E+004 nCi/g
Pu-239 Equivalent Activity	1.10E+001	+-	2.56E+000 Ci
Pu-239 FGE	1.88E+001	+-	4.63E+000 g
Decay heat	3.62E-001	+-	8.55E-002 W

Nuclide	Mass g	Activity Ci	Activity Uncert. Ci	MDA Ci
SR90	<LLD	<LLD	0.00E+000	0.00E+000
CS137	<LLD	<LLD	0.00E+000	8.14E-007
U233	<LLD	<LLD	0.00E+000	1.46E-002
U234	<LLD	<LLD	0.00E+000	0.00E+000
U235	0.00E+000	0.00E+000	0.00E+000	1.52E-005
NP237	1.61E-001	1.15E-004	2.88E-005	8.04E-006
PU238	1.84E-003	3.18E-002	9.09E-003	1.43E-003
U238	<LLD	<LLD	0.00E+000	2.31E-005
PU239	1.86E+001	1.17E+000	2.91E-001	5.26E-002
PU240	1.19E+000	2.74E-001	7.84E-002	1.23E-002
AM241	2.72E+000	9.45E+000	2.54E+000	1.32E-001
PU241	2.46E-002	2.55E+000	7.30E-001	1.14E-001
PU242	3.98E-003	1.58E-005	4.51E-006	0.00E+000

Errors quoted at 1.000 sigma

Operator: _____ Date: 4-30-12

ITR: _____ Date: 4-30-12

Automated Independent Technical Review

Count Sequence Number: 13611 Batch Number: 2LANDA0979
Counter ID: HENC #2
Container ID: S823125
Waste Matrix Code: Homo Sol. S3000 Count Type:
Sequence Type: Assay Date: 4/24/2012

Comments	Disposition
Section 1 - Add-A-Source Analysis No Add-a-Source warnings.	Ok
Section 2 - Passive Neutron Analysis Neutron TMU analysis has not been performed. Analysis Status: No errors. No Neutron TMU results available for reporting purposes. No Warnings Reported.	No Neutron results available for reporting purposes. Gamma results applied.
Section 3 - Data Combiner Analysis Override enabled; Gamma data specified as input. Results taken from Quantitative Gamma data. Results comparison test passed.	Results taken from quantitative gamma data.
Section 4 - MGA Analysis Results are marked as invalid.	MGA analysis failed. AK isotopics applied. The AK information utilized was provided by Steve Schafer, AKE, and consists of data from CCP-AK-LANL-006, AK Source Document M237. MT-52.
Section 5 - Gamma Analysis Analysis Status: No errors.	Ok
Miscellaneous	No additional nuclides contributing to 95% of the radiological hazard identified.

Expert Review by: Sheri Clemmer Date: 4-26-12

NDA 2000 Assay Report

Item Information

Item ID:	S842236	Count Sequence Number:	13613
Operator:	DCLTD231\Operator		
Assay Start:	4/24/2012 1:24:49 PM		
Description 1:	2LANDA0979		
Description 2:	N/A		
Location:	LANL TA-54		
Comment:	AK-6, CIN01, Not Precision		
Matrix Type:	Homo Sol. S3000		
Container Type:	Lead-Lined		
Weight:	Net: 204.0 kg	Net:	204.0 kg
Container:	Volume: 208.0 l	Full:	95.0 %
Density:	1.030 kg /l		

System Configuration

Counter:	HENC #2
Count Type:	Item Count
Collimator/Geometry Setting:	All Banks on GEO - 0

Errors quoted at 1.000 sigma

Quantitation Report (QT Reviewed)

InstName : FGA Unit 12

Data Path : C:\msdchem\1\DATA\120809c\
Data File : S823125.D
Acq On : 9 Aug 2012 12:03 pm (#1); 9 Aug 2012 12:01 pm (#2)
Operator : RJ
Sample :
Misc : 55 Gallon drum through filter. (Sig #1); (Sig #2)
ALS Vial : 1 Sample Multiplier: 1

Quant Time: Aug 09 12:06:19 2012
Quant Method : C:\msdchem\1\METHODS\H2-CH4.M
Quant Title : Flammable Gas Analysis for Transportation Only
QLast Update : Thu Jul 26 11:16:14 2012
Response via : Initial Calibration

Compound	R.T.	QIon	Response	Conc	Units	Dev(Min)
Target Compounds						Qvalue
1) Hydrogen	1.883	GC1	197915	712.47	ppmv	100

(#) = qualifier out of range (m) = manual integration (+) = signals summed

060

Attachment 4 – Flammable Gas Analysis Form

SCO 1049 Add 4 - Win XP SP3/Win 7 SP1
Excel 2003/2007/2010

Waste Container ID: **S823125**

BDR Number: **LA12FG12016**

Sampling Date: **8/9/2012**

CAS NUMBER	COMPOUND	Measured ppmv	Reporting Flag
1333-74-0	Hydrogen	712.47	
74-82-8	Methane	9.63	U
67-56-1	Methanol	N/A	U
60-29-7	Ethyl Ether	N/A	U
75-35-4	1,1-Dichloroethylene	N/A	U
67-64-1	Acetone	N/A	U
75-34-3	1,1-Dichloroethane	N/A	U
156-59-2	cis-1,2-Dichloroethene	N/A	U
78-93-3	Methyl ethyl ketone	N/A	U
110-82-7	Cyclohexane	N/A	U
71-43-2	Benzene	N/A	U
107-06-2	1,2-Dichloroethane	N/A	U
71-36-3	1-Butanol	N/A	U
108-10-1	Methyl isobutyl ketone	N/A	U
108-88-3	Toluene	N/A	U
108-90-7	Chlorobenzene	N/A	U
100-41-4	Ethylbenzene	N/A	U
108-38-3/106-42-3	m- and p-Xylene	N/A	U
95-47-6	o-Xylene	N/A	U
108-67-8	1,3,5-Trimethylbenzene	N/A	U
95-63-6	1,2,4-Trimethylbenzene	N/A	U

CAS Number	IDENTIFIED TIC COMPOUND	Est. Amount ppmv
N/A	N/A	N/A
N/A	N/A	N/A
N/A	N/A	N/A
N/A	N/A	N/A
N/A	N/A	N/A
N/A	N/A	N/A
N/A	N/A	N/A
N/A	N/A	N/A

S823126

NONCERTIFIED TRU WASTE DRUM REPORT

Radioactive Solid Waste Disposal Record

Ret Serial Number (DrumID): 009715

RSWD Form Number: S823126
Old RSWD:
Date: 04/15/82

Origin of Waste	Waste Description
Group: CMB-11	Waste Code: A-26
TA: 55	Waste Description:
Building: PF-4	LEACHED SOLIDS
Room/Wing: 432	
Program Code:	Additional Description:

The Noncertified TRU Waste Supplemental Data Sheet was not included in the data package.

Noncertified TRU Waste Drum Item Information

DrumID: 009715

Item No	ItemID	Process Status	Net Wt (kg)	Matrix	Meas Code	SNM (g)	MT	Auth (Pg/Ln)	Comments
1	IXFS-539F1		44.000	EVAPORATOR SALTS		6.	52	5/11	
2	IXFS-540F1		53.000	EVAPORATOR SALTS		9.	52	5/11	
3	IXFS-541F1		29.000	EVAPORATOR SALTS		5.	52	5/11	
4	TANKWASH		44.000	EVAPORATOR SALTS			52	5/11	

Noncertified Waste Drum Material Summary

Gross Wt (kg): 234.

Material Type	SNM (grams)	Items Net Wt (kg)
52	20.	170.00
Totals	20.	170.00

1 9 7 2 0 2 9

PLEASE READ INSTRUCTIONS ON BACK CAREFULLY

LOS ALAMOS RADIOACTIVE SOLID WASTE DISPOSAL RECORD FORM

H-7 Wa[redacted]ment
Ext 60[redacted]

1. FORM NUMBER
S 8 2 3126

2. DATE (M M D D Y Y)	3. RETRIEVABLE SERIAL NO.
0 4 1 5 8 2	0 0 9 7 1 5

4. ORIGIN OF WASTE					5. WASTE CODE
GROUP	TA	BLDG.	WING	ROOM	
C M 8 1 1	5 5	P G 4		4 3 2	4 2 1

6. WASTE DESCRIPTION

Leached solids

7. NUMBERS OF WASTE PACKAGES					
PLASTIC BAGS	CARD BOARD BOXES	DRUMS NO.	DRUMS GAL.	WOODEN CRATES NO.	WOODEN CRATES VOLUME-ft³
			55		

8. GROSS VOLUME	UNITS (M = METER³, F = FEET³, G = GALLON)
2	M

9. PACKAGE RADIATION AT:	
SURFACE MR/HR	1 METER MR/HR
100	

10. GROSS WEIGHT	UNITS (K = KILOGRAM, P = POUND, T = TON)
2 2 4 0	K

11. ADDITIONAL DESCRIPTION OF PACKAGING AND PACKAGING MATERIALS

12. RADIONUCLIDE CONTENT				UNITS (C = CURIE, M = GRAM)	ERROR ON AMOUNT			AMOUNT DETERMINED BY: (A = ANALYSIS, M = MEASUREMENT, E = ESTIMATE)	SS MATERIALS WRITEOFF	
NUCLIDE	AMOUNT		±				±		ACCOUNT	PROJECT CODE
Pu 52	290	E	41	m		E		m	741	309
		E				E				
		E				E				
		E				E				
		E				E				
		E				E				

Mary Ann Daniel
WASTE GENERATOR
Signature certifies that waste is in accordance with all applicable disposal requirements.

H-1 AREA REPRESENTATIVE
Signature certifies that waste package or shipment is safe to handle and transport.

Mary A. Daniel
~~GROUP LEADER REPRESENTATIVE~~

13. DATE DISPOSED (M M D D Y Y)

14. DISPOSAL/STORAGE LOCATION					
AREA	SHAFT	PIT	POST(S)	LAYER	POS.

15. SHAFT SURFACE DOSE
MR/HR

H-7 WASTE MANAGEMENT REPRESENTATIVE

HS-E 7-1A (10/81)

DISCARDABLE SOLIDS

[X] Leached [ ] N-Comb. [ ] Comb. [ ] PN

Seal # DRM 9715 Waste Code A26 WP Date 4/14/82

RSWD # 8126 Project # 3Φ9 Transaction # 224550

Item #	Ident.	From Room Box	Net Wt. kg	Matrix	g Pu	%	MT	Generator - Name	Waste Mgmt. Personnel	Auth. Pg/Ln	Date
1	IXFS-539F1	G-465	44.Φ	EVAP. Salt	6.Φ	6	52	A. MARTINEZ	MAD	5/11	4/15
2	IXFS-540A	G-465	53.Φ		9.Φ	6	52	A. MARTINEZ		5/11	4/15
3	IXFS-541F1	G-465	29.Φ		5.Φ	6	52	A. MARTINEZ		5/11	4/15
4	TANK WASH	G-465	44.Φ		Φ.Φ	6	52	A. MARTINEZ		5/11	4/15
5											
6											
7											
8											
9											
10											

MT	MASS SNM	NET WEIGHT	ACCOUNTABILITY CHECK
52	2Φ.Φg	17Φ.ΦKG	OK/PfLess

Verified Value —

Bulk Weight 234ΦKG

CMB11-COF-108

Attachment 2 – CCP Radiography Data Sheet

Section 1: General Information	
☑ RTR Examination ☐ RTR Replicate Scan ☐ RTR Independent Observation	
Site ID:	LANL
Batch Number:	LA-HERTR-12-0073
Examination Date:	08/01/12
Waste Container ID:	S823126
Video/Audio Recorded Media Number:	LA-HERTR-12-0073 C
Procedure and Revision No.:	CCP-TP-053 Rev. 11
NCR(s) associated with the container? (e.g., Prohibited Items)	☑ NO ☐ YES NCR No.: N/A NCR No.: N/A

Section 2: Waste Container Data	
Container Type:	55 GALLON DRUM
TRUCON Code:	LA226
Waste Matrix Code:	S3150
Waste Stream I.D.:	LA-CIN01.001
Waste Container Weights:	Gross Wt: 230.5 kg. Tare Wt: 52.7 kg. Net Wt: 177.8 kg.
Rigid Liner and Liner Vent Description: (e.g., "90 mil liner – NO Lid" or "NO Liner")	No Liner - Lead Lined Drum
Number of Layers of Confinement:	Appears to be 2 layers
Volume Utilization Percentage:	100 %

Attachment 2 – CCP Radiography Data Sheet (Continued)

Page 2 of 3

Waste Container ID: S823126

Section 3: Container Inventory and Comments (Detailed descriptions)
Metal cans with material
Plastic bags
Homogeneous solid material

Section 4: Packaging Material and Waste Material Parameters		
Packaging Material:		Estimated Weight (kg)
Steel (ST):		27.7
Plastics (PP):	Plastic Liner Bag	2.0
Others:	Lead Liner	23.0
Total Packaging Weight:		52.7
Waste Material Parameter:		Estimated Weight (kg)
Iron-based Metal / Alloys (IM):		18.0
Aluminum-based Metals / Alloys (AM):		
Other Metals (OM):		
Other Inorganic Materials (OI):		
Cellulosics (C):		
Rubber (R):		
Plastics (waste materials) (XPM):		6.0
Organic Matrix (OR):		
Inorganic Matrix (IN):		153.8
Soils (S):		
Total WMP Weight:		177.8

Attachment 2 – CCP Radiography Data Sheet (Continued)

Waste Container ID: S823126

Section 5: RTR Summary (Questions answered "YES" will be explained in the Comments block, except for Question 1)	Yes	No
Is there observable liquid?	☐	☑
Is there any observable liquid in internal containers, more than 60 milliliters or 3 percent by volume, whichever is greater?	☐	☑
Is the total volume of observable liquid in the outermost container **GREATER** than 1% of the container?	☐	☑
Is there observable liquid in payload containers with an EPA Hazardous Waste Number of U134?	☐	☑
Is there an indication of non-radionuclide pyrophoric materials, such as elemental potassium?	☐	☑
Is there an indication of hazardous wastes not occurring as co-contaminants with TRU mixed wastes (non-mixed hazardous wastes)?	☐	☑
Is there an indication of wastes incompatible with backfill, seal and panel closures materials, container and packaging materials, shipping container materials, or other wastes (i.e., waste does NOT match TRUCON Code[s])?	☐	☑
Is there an indication of wastes containing explosives or compressed gases?	☐	☑
Is there an indication of PCBs liquids?	☐	☑
Is there an indication of the waste exhibiting the characteristic of ignitability, corrosivity, or reactivity (EPA hazardous waste numbers of D001, D002, or D003)?	☐	☑
Is the physical form of the waste inconsistent with the Waste Stream Description or the Waste Matrix Code?	☐	☑
CH or RH TRAMPAC		
Are there heat-sealed bags (unvented) GREATER than 4 liters and LESS than 390 square inches in the waste, or heat sealed bags not authorized in the RH TRUCON Code?	☐	☑
Were there Non-approved Closure Methods used on liner bags or inner bags greater than 4 liters?	☐	☑
Are there sealed containers GREATER than 4 liters?	☐	☑
Are there indications of inadequate protection for heavy and/or sharp objects?	☐	☑

Comments: Per CCP-SO-LANL-55 Inconsistencies associated with these packaging configurations (Slip fit lids) will not disqualify the container from meeting the waste stream description.

RTR Operator:

Michael Simmons	M.M	08/01/12
Print Name	Signature	Date

NDA 2000 Assay Report

Item Information

Item ID:	S823126	Count Sequence Number:	14280
Operator:	DCLTD231\Operator		
Assay Start:	8/8/2012 2:46:43 PM		
Description 1:	2LANDA1031		
Description 2:	N/A		
Location:	LANL TA-54		
Comment:	AK-6 , CIN01 , Not Precision		
Matrix Type:	Homo Sol. S3000		
Container Type:	Lead-Lined		
Weight:	Net: 178.0 kg	Net:	178.0 kg
Container:	Volume: 208.0 l	Full:	100.0 %
Density:	0.860 kg /l		

System Configuration

Counter:	HENC #2
Count Type:	Lead-Lined
Collimator/Geometry Setting:	All Banks on GEO - 0

Errors quoted at 1.000 sigma

Radioassay Data Sheet

Engine Version: MMRes. Cmb. V1.2

Count Sequence Number:	14280	Batch Number:	2LANDA1031
Assay Instrument:	HENC #2	Location:	LANL TA-54
Analysis Method:	CCP-TP-063 v 14	Software Version:	NDA 2000 V.4.0
Item ID:	S823126	Analysis Date:	8/8/2012

Net Weight	178000.0 g		
Pu mass	2.17E+001	+- 9.47E+000	g
TRU Alpha Activity	1.35E+001	+- 3.19E+000	Ci
TRU Activity Concentration	7.61E+004	+- 1.79E+004	nCi/g
Pu-239 Equivalent Activity	1.36E+001	+- 3.19E+000	Ci
Pu-239 FGE	2.05E+001	+- 9.45E+000	g
Decay heat	4.49E-001	+- 1.06E-001	W

Nuclide	Mass g	Activity Ci	Activity Uncert. Ci	MDA Ci
SR90	<LLD	<LLD	0.00E+000	0.00E+000
CS137	<LLD	<LLD	0.00E+000	8.70E-007
U233	<LLD	<LLD	0.00E+000	1.47E-002
U234	<LLD	<LLD	0.00E+000	0.00E+000
U235	0.00E+000	0.00E+000	0.00E+000	1.55E-005
NP237	2.16E-001	1.54E-004	3.73E-005	8.19E-006
PU238	2.00E-003	3.46E-002	1.68E-002	1.54E-003
U238	<LLD	<LLD	0.00E+000	2.23E-005
PU239	2.04E+001	1.28E+000	5.94E-001	5.68E-002
PU240	1.30E+000	2.99E-001	1.45E-001	1.33E-002
AM241	3.44E+000	1.19E+001	3.13E+000	2.06E-001
PU241	2.64E-002	2.75E+000	1.33E+000	1.22E-001
PU242	4.34E-003	1.72E-005	8.36E-006	0.00E+000

Errors quoted at 1.000 sigma

Operator: Jim Barton Date: 8/9/12

ITR: Date: 8-13-2012

Automated Independent Technical Review

Count Sequence Number: 14280 Batch Number: 2LANDA1031
Counter ID: HENC #2
Container ID: S823126
Waste Matrix Code: Homo Sol. S3000 Count Type:
Sequence Type: Assay Date: 8/8/2012

Comments	Disposition
Section 1 - Add-A-Source Analysis No Add-a-Source warnings.	Ok
Section 2 - Passive Neutron Analysis Analysis Status: No errors. Ones Rate Analysis complete with warnings. - Error calculating the Ones Rate Pu-240 Effective MDA.	Ok Not data affecting.
Section 3 - Data Combiner Analysis Override enabled; Gamma data specified as input. Results taken from Quantitative Gamma data. Results comparison test passed.	Results taken from quantitative gamma data.
Section 4 - MGA Analysis Results are marked as invalid.	MGA analysis failed. AK isotopics applied. The AK information utilized was provided by Steve Schafer, AKE, and consists of data from CCP-AK-LANL-006, AK Source Document M237. MT-52.
Section 5 - Gamma Analysis Analysis Status: No errors.	Ok
Miscellaneous	No additional nuclides contributing to 95% of the radiological hazard identified.

Expert Review by: Sheri Chandler Date: 8-9-12

Quantitation Report (QT Reviewed)

InstName : FGA Unit 12

Data Path : C:\msdchem\1\DATA\120823c\
Data File : S823126.D
Acq On : 23 Aug 2012 1:19 pm (#1); 23 Aug 2012 1:17 pm (#2)
Operator : NW
Sample :
Misc : 55 GALLON DRUM THROUGH FILTER (Sig #1); (Sig #2)
ALS Vial : 1 Sample Multiplier: 1

Quant Time: Aug 23 13:22:43 2012
Quant Method : C:\msdchem\1\METHODS\H2-CH4.M
Quant Title : Flammable Gas Analysis for Transportation Only
QLast Update : Thu Jul 26 11:16:14 2012
Response via : Initial Calibration

Compound	R.T.	QIon	Response	Conc	Units	Dev(Min)
Target Compounds						Qvalue
1) Hydrogen	1.867	GC1	113799m	409.66	ppmv	

(#) = qualifier out of range (m) = manual integration (+) = signals summed

36

Attachment 4 – Flammable Gas Analysis Form

SCO 1049 Add 4 - Win XP SP3/Win 7 SP1
Excel 2003/2007/2010

Waste Container ID: **S823126**

BDR Number: **LA12FG12025**

Sampling Date: **8/23/2012**

CAS NUMBER	COMPOUND	Measured ppmv	Reporting Flag
1333-74-0	Hydrogen	409.66	
74-82-8	Methane	9.63	U
67-56-1	Methanol	N/A	U
60-29-7	Ethyl Ether	N/A	U
75-35-4	1,1-Dichloroethylene	N/A	U
67-64-1	Acetone	N/A	U
75-34-3	1,1-Dichloroethane	N/A	U
156-59-2	cis-1,2-Dichloroethene	N/A	U
78-93-3	Methyl ethyl ketone	N/A	U
110-82-7	Cyclohexane	N/A	U
71-43-2	Benzene	N/A	U
107-06-2	1,2-Dichloroethane	N/A	U
71-36-3	1-Butanol	N/A	U
108-10-1	Methyl isobutyl ketone	N/A	U
108-88-3	Toluene	N/A	U
108-90-7	Chlorobenzene	N/A	U
100-41-4	Ethylbenzene	N/A	U
108-38-3/106-42-3	m- and p-Xylene	N/A	U
95-47-6	o-Xylene	N/A	U
108-67-8	1,3,5-Trimethylbenzene	N/A	U
95-63-6	1,2,4-Trimethylbenzene	N/A	U

CAS Number	IDENTIFIED TIC COMPOUND	Est. Amount ppmv
N/A	N/A	N/A
N/A	N/A	N/A
N/A	N/A	N/A
N/A	N/A	N/A
N/A	N/A	N/A
N/A	N/A	N/A
N/A	N/A	N/A
N/A	N/A	N/A

S835376

NONCERTIFIED TRU WASTE DRUM REPORT

Radioactive Solid Waste Disposal Record

Ret Serial Number (DrumID): 009401

RSWD Form Number: S835376
Old RSWD: S832260
Date: 11/30/83

Origin of Waste

Group: MST-DO
TA: 55
Building: PF-4
Room/Wing: 432
Program Code:

Waste Description

Waste Code: A-25
Waste Description:
LEACHED SOLIDS

Additional Description:
MST-12 OLDER RSWD S824209
HAS TWO OLDER RSWD'S

The Noncertified TRU Waste Supplemental Data Sheet was not included in the data package.

Noncertified TRU Waste Drum Item Information

DrumID: 009401

Item No	ItemID	Process Status	Net Wt (kg)	Matrix	Meas Code	SNM (g)	MT	Auth (Pg/Ln)	Comments
1	IXFS-601FB		29.320	NITRATE SALTS		24.85	52	11/6	
2	IXFS-602-F1		5.230	NITRATE SALTS		5.23	52	6/11	
3	IXFS-6030F1		26.360	NITRATE SALTS		12.91	52	11/6	

Noncertified Waste Drum Material Summary

Gross Wt (kg): 125.9

Material Type	SNM (grams)	Items Net Wt (kg)
52	42.99	60.91
Totals	42.99	60.91

PLEASE READ INSTRUCTIONS ON BACK CAREFULLY

LOS ALAMOS RADIOACTIVE SOLID WASTE DISPOSAL RECORD FORM

H-7 Waste Management
Ext 6095 MS J592

1. FORM NUMBER
S 8 3 5576

2. DATE (M M D D Y Y)	3. RETRIEVABLE SERIAL NO.	4. ORIGIN OF WASTE: GROUP	TA	BLDG.	WING	ROOM	5. WASTE CODE
113083	009401	MST	055	1F4	434	432	A25

6. WASTE DESCRIPTION
Leached Solids

7. NUMBERS OF WASTE PACKAGES: PLASTIC BAGS	CARD BOARD BOXES	DRUMS NO.	DRUMS GAL.	WOODEN CRATES NO.	WOODEN CRATES VOLUME ft³
		155			

8. GROSS VOLUME	UNITS (M = METER³, F = FEET³, G = GALLON)
7	M

9. PACKAGE RADIATION AT: SURFACE MR/HR	1 METER MR/HR
3	1

10. GROSS WEIGHT	UNITS (K = KILOGRAM, P = POUND, T = TON)
1,259	K

11. ADDITIONAL DESCRIPTION OF PACKAGING AND PACKAGING MATERIALS
MST12

12. RADIONUCLIDE CONTENT: NUCLIDE	AMOUNT	±	UNITS (C = CURIE, M = GRAM)	ERROR ON AMOUNT	±	AMOUNT DETERMINED BY (A = ANALYSIS, M = MEASUREMENT, E = ESTIMATE)	SS MATERIALS WRITEOFF: ACCOUNT	PROJECT CODE
Pu	52449.5	E +1	M		E	A	741	309
		E			E			
		E			E			
		E			E			
		E			E			
		E			E			

WASTE GENERATOR — Signature certifies that waste is in accordance with all applicable waste acceptance requirements

H-1 AREA REPRESENTATIVE — Signature certifies that waste is safe to handle and transport

GROUP LEADER (AS NECESSARY)

13. DATE DISPOSED (M M D D Y Y)

14. DISPOSAL/STORAGE LOCATION: AREA	SHAFT	PIT	POST(S)	LAYER	POS.

15. SHAFT SURFACE DOSE MR/HR

H-7 WASTE MANAGEMENT REPRESENTATIVE _____

HSF 7-1A (10/81)

Signature certifies waste met acceptance criteria and all disposal requirements

DISCARDABLE SOLIDS

☑ Leached ☐ N-Comb. ☐ Comb. ☐ PH

Seal # DRM 9401 Waste Code A-25 WP Date

RSWD # 5376 Project # 309 Transaction #

Item #	Ident.	From Room Box	Net Wt. Kg	Matrix	g Pu	%	HT	Generator Name	Waste Mgmt. Personnel	Auth. Pg/Ln	Date
1	IXFS-601-FB	G465	29.32	nitrate salts	24.85	6	52	Andrew Martin		6 / 11	11/18
2	IXFS-603-F1	"	5.23	"	7.19	6	52	Andrew Martin		6 / 11	11/16
3	IXFS-603-F1	"	26.36	"	12.91	6	52	Andrew Martin		6 / 11	11/18
4											
5											
6											
7											
8											
9											
10											

HT	MASS SNM	NET WEIGHT	ACCOUNTABILITY CHECK
52	44.95 g	60.91 Kg	OK-RAS

Verified Value

Bulk Weight 125.41 Kg

NST-11-COF-108

PLEASE READ INSTRUCTIONS ON BACK CAREFULLY

LOS ALAMOS RADIOACTIVE SOLID WASTE DISPOSAL RECORD FORM

H-7 Waste Management
Ext 6095 MS J592

1. FORM NUMBER
S 8 3 2260

2. DATE (M M D D Y Y)	3. RETRIEVABLE SERIAL NO.	4. ORIGIN OF WASTE: GROUP	TA	BLDG.	WING	ROOM	5. WASTE CODE
01 03 83	0 0 9 4 1 0 1 1	M5-TD10	55	19F14		14-312	4217

6. WASTE DESCRIPTION

Kreached Solids

7. NUMBERS OF WASTE PACKAGES: PLASTIC BAGS	CARD BOARD BOXES	DRUMS NO.	DRUMS GAL.	WOODEN CRATES NO.	WOODEN CRATES VOLUME-ft³
		1	55		

8. GROSS VOLUME	UNITS (M = METER³, F = FEET³, G = GALLON)
37	M

9. PACKAGE RADIATION AT: SURFACE MR/HR	1 METER MR/HR
13	2

10. GROSS WEIGHT	UNITS (K = KILOGRAM, P = POUND, T = TON)
1964	K

11. ADDITIONAL DESCRIPTION OF PACKAGING AND PACKAGING MATERIALS

Nitrate Salts EVAP

12. RADIONUCLIDE CONTENT: NUCLIDE	AMOUNT	±	UNITS (C = CURIE, M = GRAM)	ERROR ON AMOUNT	±	AMOUNT DETERMINED BY (A = ANALYSIS, M = MEASUREMENT, E = ESTIMATE)	SS MATERIALS WRITEOFF: ACCOUNT	PROJECT CODE
Pu 152	692	E +/-	M		E	M	741	309
		E			E			
		E			E			
		E			E			
		E			E			
		E			E			

Espinoza, as — WASTE GENERATOR
Signature certifies that waste is in accordance with all applicable disposal requirements.

KA — H-1 AREA REPRESENTATIVE
Signature certifies that waste package or shipment is safe to handle and transport.

GROUP LEADER (AS NECESSARY)

13. DATE DISPOSED (M M D D Y Y)

14. DISPOSAL/STORAGE LOCATION: AREA	SHAFT	PIT	POST(S)	LAYER	POS.

15. SHAFT SURFACE DOSE MR/HR

H-7 WASTE MANAGEMENT REPRESENTATIVE

HS-E 7-1A (10/81)

Signature certifies waste met acceptance criteria and all disposal requirements were met.

[ ] Leached [ ] N-Comb. [ ] Comb. [ ] PN

Seal # DRM-9401 Waste Code A-27 WP Date

RSWD # 4209 1982 Project # 3.09 Transaction #

2260 1983

Item #	Ident.	From Room Box	Net Wt. kg	Matrix	g Pu	%	MT	Generator Name	Waste Mgmt. Personnel	Auth. Pg/Ln	Date
1	IXFS-601 FB	3468	41.05	nitrate salts	27.33	6	52	pp/cs	fae	5/11	7/8
2	IXFS-602-F1	"	5.23	"	7.19	6	52	pp/cs	fae	5/11	7/12
3	IXFS-603-F1	"	80.22	"	27.68	6	52	pp/cs	fae	5/11	7/13
4											
5											
6											
7											
8											
9											
10											

MT	MASS SNM	NET WEIGHT	ACCOUNTABILITY CHECK
52	62.2 g	132.50 Kg	OK PFLASS

Verified Value

Bulk Weight 196.36 Kg

PLEASE READ INSTRUCTIONS ON BACK CAREFULLY

LOS ALAMOS RADIOACTIVE SOLID WASTE DISPOSAL RECORD FORM

H-7 Waste Management
Ext 6095 MS-592

1. FORM NUMBER
S 8 2 4209

2. DATE (M M D D Y Y)	3. RETRIEVABLE SERIAL NO.
07/14/82	009401

4. ORIGIN OF WASTE				
GROUP	TA	BLDG.	WING	ROOM
CMB/1	55	PF4		432

5. WASTE CODE
A27

6. WASTE DESCRIPTION
Leached Solids

7. NUMBERS OF WASTE PACKAGES					
PLASTIC BAGS	CARD BOARD BOXES	DRUMS		WOODEN CRATES	
		NO.	GAL.	NO.	VOLUME-ft³
		1	55		

8. GROSS VOLUME	UNITS (M = METER³, F = FEET³, G = GALLON)
.2	M

9. PACKAGE RADIATION AT 1	
SURFACE MR/HR	1 METER MR/HR
1.3	2

10. GROSS WEIGHT	UNITS (K = KILOGRAM, P = POUND, T = TON)
1964	K

11. ADDITIONAL DESCRIPTION OF PACKAGING AND PACKAGING MATERIALS
Nitrate Salts Evap.

12. RADIONUCLIDE CONTENT				UNITS (C = CURIE, M = GRAM)				AMOUNT DETERMINED BY: (A = ANALYSIS, M = MEASUREMENT, E = ESTIMATE)	SS MATERIALS WRITEOFF	
NUCLIDE	AMOUNT		±		ERROR ON AMOUNT		±		ACCOUNT	PROJECT CODE
Pu 52	6.2	E	±1	M		E		M	741	309
		E				E				
		E				E				
		E				E				
		E				E				
		E				E				

WASTE GENERATOR
Signature certifies that waste is in accordance with all applicable disposal requirements.

H-1 AREA REPRESENTATIVE KA
Signature certifies that waste package or shipment is safe to handle and transport.

~~GROUP LEADER (AS NECESSARY)~~

13. DATE DISPOSED
M M D D Y Y

14. DISPOSAL/STORAGE LOCATION					
AREA	SHAFT	PIT	POST(S)	LAYER	POS.
			-		

15. SHAFT SURFACE DOSE
MR/HR

H-7 WASTE MANAGEMENT REPRESENTATIVE

HS-E 7-1A (10/81)

☑ Leached ☐ N-Comb. ☐ Comb. ☐ PN

Seal # DKM-9401 Waste Code A-27 WP Date

RSWD # 4209 1982 Project # 509 Transaction #

2260 1983

Item #	Ident.	From Room Box	Net Wt. kg	Matrix	g Pu	%	MT	Generator Name	Waste Mgmt. Personnel	Auth. Pg/Ln	Date
1	IXFS-601 FB	2468	41.05	nitrate salts	27.33	6	52	PP/CS	fae	5/11	7/N
2	IXFS-602-F1	"	5.23	"	7.19	6	52	PP/CS	fae	5/11	7/12
3	IXFS-603-F1	"	80.22	"	27.68	6	52	PP/CS	fae	5/11	7/13
4											
5											
6											
7											
8											
9											
10											

MT	MASS SNM	NET WEIGHT	ACCOUNTABILITY CHECK
52	62.2 g	132.50 Kg	

Verified Value

Bulk Weight 196.36 Kg

OEPGLASS

CCP Radiography Data Sheet

Section 1: General Information	
[X] RTR Examination [ ] RTR Replicate Scan [ ] RTR Independent Observation	
Site ID:	LANL
Batch Number:	LA-HERTR-12-0106
Examination Date:	10/1/2012
Waste Container ID:	S835376
Video/Audio Recorded Media Number:	LA-HERTR-12-0106 C&D
Procedure and Revision No.:	CCP-TP-053 Rev. 12
NCR(s) associated with the container? (e.g., Prohibited Items)	~~[X]~~ No DP 10-11-12 [X] Yes DP 10-11-12 NCR No.: ~~N/A~~ DP 10-11-12 NCR-LANL-1031-12 DP 10-11-12 NCR No.: N/A

Section 2: Waste Container Data	
Container Type:	55 Gallon Drum
TRUCON Code:	LA226
Waste Matrix Code:	S3150
Waste Stream I.D.:	LA-CIN01.001
Waste Container Weights:	Gross Wt.: 122.5 kg Tare Wt.: DP 10-2-12 ~~27.7~~ 58.1 kg DP 10-2-12 Net Wt.: DP 10-2-12 ~~94.8~~ 64.4 kg DP 10-2-12
Rigid Liner and Liner Vent Description:	Liner: [ ] No [X] Yes Lid: [ ] No [X] Yes Type: [ ] 30-mil [X] 90-mil [ ] 110-mil [ ] 125-mil Vented: [ ] No [X] Yes [ ] N/A Punctured: DP 10-2-12 [X] No ~~[X]~~ Yes DP 10-2-12 Mechanical Vent: ~~[X]~~ No DP 10-2-12 [X] Yes DP 10-2-12 Fiberboard Liner: [X] No [ ] Yes Lead Lined: DP 10-2-12 ~~[X]~~ No [X] Yes DP 10-2-12
Number of Layers of Confinement:	Appears to be 2 layers
Volume Utilization Percentage:	DP 10-2-12 45 ~~20~~ % DP 10-2-12

CCP Radiography Data Sheet

Waste Container ID: S835376

Section 3: Container Inventory and Comments	(Detailed descriptions)
IM:	
AM:	
OM: ~~Scrap lead~~ DP 10-11-12	
OI:	
C:	
R:	
XPM: Plastic bags	
OR:	
IN: Homogeneous solids	
S:	

Section 4: Packaging Material and Waste Material Parameters	
Packaging Material:	**Estimated Weight (kg)**
Steel (ST):	27.7 DP 10-2-12
Plastics (PP): Rigid Liner with Lid DP 10-2-12	DP 10-2-12 ~~0.0~~ 7.4
Other: Lead Liner DP 10-2-12	DP 10-2-12 ~~0.0~~ 23.0 DP 10-2-12
Total Packaging Weight	DP 10-2-12 ~~27.7~~ 58.1 DP 10-2-12
Waste Material Parameter:	**Estimated Weight (kg)**
Iron-based Metal / Alloys (IM):	
Aluminum-based Metals / Alloys (AM):	DP 10-2-12
Other Metals (OM):	DP 10-2-12 ~~20.0~~ 0.0
Other Inorganic Materials (OI)	
Cellulosics (C):	
Rubber (R):	
Plastics (waste materials) (XPM):	3.0
Organic Matrix (OR):	DP 10-2-12
Inorganic Matrix (IN):	DP 10-2-12 ~~71.8~~ 61.4
Soils (S):	DP 10-2-12
Total WMP Weight:	DP 10-2-12 ~~94.8~~ 64.4

CCP Radiography Data Sheet

Waste Container ID: S835376

Section 5: RTR Summary (Questions answered "Yes" will be explained in the Comment block, except for Question 1)	
Is there observable liquid?	☐ Yes ☒ No
Is there any observable liquid in internal containers, more than 60 milliliters or 3 percent by volume, whichever is greater?	☐ Yes ☒ No
Is the total volume of observable liquid in the outermost container GREATER than 1% of the container?	☐ Yes ☒ No
Is there observable liquid in payload containers with an EPA Hazardous Waste Number of U134?	☐ Yes ☒ No
Is there an indication of non-radionuclide pyrophoric materials, such as elemental potassium?	☐ Yes ☒ No
Is there an indication of hazardous wastes not occurring as co-contaminants with TRU mixed wastes (non-mixed hazardous wastes)?	☐ Yes ☒ No
Is there an indication of wastes incompatible with backfill, seal and panel closures materials, container and packaging materials, shipping container materials, or other wastes (i.e., waste does NOT match TRUCON Code[s])?	☐ Yes ☒ No
Is there an indication of wastes containing explosives or compressed gases?	☐ Yes ☒ No
Is there an indication of PCBs liquids?	☐ Yes ☒ No
Is there an indication of the waste exhibiting the characteristic of ignitability, corrosivity, or reactivity (EPA Hazardous Waste Numbers of D001, D002, or D003)?	☐ Yes ☒ No
Is the physical form of the waste inconsistent with the Waste Stream Description or the Waste Matrix Code?	☐ Yes ☒ No
CH or RH TRAMPAC	
Are there heat-sealed bags (unvented) GREATER than 4 liters and LESS than 390 square inches in the waste, or heat sealed bags not authorized in the RH TRUCON Code?	☐ Yes ☒ No
Were there Non-approved Closure Methods used on liner bags or inner bags greater than 4 liters?	☐ Yes ☒ No
Are there sealed containers GREATER than 4 liters?	☐ Yes ☒ No
Are there indications of inadequate protection for heavy and/or sharp objects?	☐ Yes ☒ No

Comments: ~~N/A~~ DP 10-2-12 CCP-50-LANL-55-Inconsistencies associated with these Packaging configurations (rigid liners with or without lids) will not disqualify the container from meeting the waste stream description.
After review the drum appears to have a lead liner and the Percent utilization was corrected. This attatchment 2 reflects the correct data.
DP 10-2-12 NCR-LANL-1031-12 DP 10-11-12

RTR Operator:		
		10-11-12
Dennis Powell		10/1/2012
Print Name	Signature	Date

10-2-12

NDA 2000 Assay Report

Item Information

Item ID:	S835376	Count Sequence Number:	15533
Operator:	DCLTD231\Operator		
Assay Start:	4/15/2013 1:10:41 PM		
Description 1:	2LANDA1139		
Description 2:	N/A - RERUN - NCR		
Location:	LANL TA-54		
Comment:	AK-6		
Matrix Type:	Homo Sol. S3000		
Container Type:	Lead-Lined		
Weight:	Net: 64.4 kg	Net:	64.4 kg
Container:	Volume: 208.0 l	Full:	45.0 %
Density:	0.690 kg /l		

System Configuration

Counter:	HENC #2
Count Type:	Lead-Lined
Collimator/Geometry Setting:	All Banks on GEO - 0

Errors quoted at 1.000 sigma

Radioassay Data Sheet

Engine Version: MMRes. Cmb. V1.2

Count Sequence Number:	15533	Batch Number:	2LANDA1139
Assay Instrument:	HENC #2	Location:	LANL TA-54
Analysis Method:	CCP-TP-063 v 14	Software Version:	NDA 2000 V.4.0
Item ID:	S835376	Analysis Date:	4/15/2013

Net Weight	64400.0 g		
Pu mass	3.30E+001	+-	1.20E+001 g
TRU Alpha Activity	1.04E+001	+-	1.91E+000 Ci
TRU Activity Concentration	1.61E+005	+-	2.96E+004 nCi/g
Pu-239 Equivalent Activity	1.05E+001	+-	1.91E+000 Ci
Pu-239 FGE	3.12E+001	+-	1.20E+001 g
Decay heat	3.41E-001	+-	6.29E-002 W

Nuclide	Mass g	Activity Ci	Activity Uncert. Ci	MDA Ci
SR90	2.64E-008	3.65E-006	1.44E-006	0.00E+000
CS137	4.16E-008	3.65E-006	1.44E-006	7.05E-007
U233	<LLD	<LLD	0.00E+000	1.16E-002
U234	<LLD	<LLD	0.00E+000	0.00E+000
U235	0.00E+000	0.00E+000	0.00E+000	1.22E-005
NP237	1.54E-001	1.10E-004	2.42E-005	6.57E-006
PU238	3.03E-003	5.24E-002	2.16E-002	1.19E-003
U238	<LLD	<LLD	0.00E+000	2.15E-005
PU239	3.10E+001	1.95E+000	7.56E-001	4.43E-002
PU240	1.98E+000	4.56E-001	1.88E-001	1.04E-002
AM241	2.28E+000	7.92E+000	1.74E+000	1.67E-001
PU241	3.89E-002	4.05E+000	1.67E+000	9.21E-002
PU242	6.61E-003	2.62E-005	1.08E-005	0.00E+000

Errors quoted at 1.000 sigma

Operator: D. Clark Date: 4-17-13

ITR: Mark Gu Date: 4-18-13

Automated Independent Technical Review

Count Sequence Number: 15533 Batch Number: 2LANDA1139
Counter ID: HENC #2
Container ID: S835376
Waste Matrix Code: Homo Sol. S3000 Count Type:
Sequence Type: Assay Date: 4/15/2013

Comments	Disposition
Section 1 - Add-A-Source Analysis	
Add-a-Source WARNINGS:	
Add-a-Source correction factor is less than one.	Ok
Add-a-Source correction factor was set to one.	Ok
Add-a-Source correction factor is less than n-sigma * the correction factor error.	Ok
Section 2 - Passive Neutron Analysis	
Analysis Status: No errors.	Ok
Ones Rate Analysis complete with warnings.	
- Error calculating the Ones Rate Pu-240 Effective MDA.	Not data affecting.
Cosmic Ray Rejection Analysis complete with warnings.	
- The CRR High-Z mass Mass Variance is negative, High-Z mass Uncertainty set to zero so analysis could continue.	Ok
- The Pu-240 Eff Mass Variance is negative, Pu-240 Eff. Mass Uncertainty set to zero so analysis could continue.	Ok

Comments	Disposition
Section 3 - Data Combiner Analysis Override enabled; Gamma data specified as input. Results taken from Quantitative Gamma data. Results comparison test passed.	Results taken from quantitative gamma data.
Section 4 - MGA Analysis Results are marked as invalid.	MGA analysis failed. AK isotopics applied. The AK information utilized was provided by Steve Schafer, AKE, and consists of data from CCP-AK-LANL-006, AK Source Document M237. MT-52.
Section 5 - Gamma Analysis Analysis Status: No errors.	Ok
Miscellaneous	No additional nuclides contributing to 95% of the radiological hazard identified.

Expert Review by: Sheri Chamber Date: 4-17-13

Quantitation Report (QT Reviewed)

```
InstName  : FGA Unit 12

Data Path : C:\msdchem\1\DATA\130424c\
Data File : S835376.D
Acq On    : 24 Apr 2013   2:32 pm (#1); 24 Apr 2013   2:30 pm (#2)
Operator  : GR
Sample    :
Misc      : 55 GALLON DRUM THROUGH FILTER (Sig #1);  (Sig #2)
ALS Vial  : 1   Sample Multiplier: 1

Quant Time: Apr 24 14:36:18 2013
Quant Method : C:\msdchem\1\METHODS\H2-CH4.M
Quant Title  : Flammable Gas Analysis for Transportation Only
QLast Update : Tue Feb 26 13:17:30 2013
Response via : Initial Calibration
```

Compound	R.T.	QIon	Response	Conc	Units	Dev(Min)

Target Compounds	Qvalue

(#) = qualifier out of range (m) = manual integration (+) = signals summed

35

Waste Container ID: **S835376**

BDR Number: **LA13FG12032**

Sampling Date: **4/24/2013**

CAS NUMBER	COMPOUND	Measured ppmv	Reporting Flag
1333-74-0	Hydrogen	8.15	U
74-82-8	Methane	9.63	U
67-56-1	Methanol	N/A	U
60-29-7	Ethyl Ether	N/A	U
75-35-4	1,1-Dichloroethylene	N/A	U
67-64-1	Acetone	N/A	U
75-34-3	1,1-Dichloroethane	N/A	U
156-59-2	cis-1,2-Dichloroethene	N/A	U
78-93-3	Methyl ethyl ketone	N/A	U
110-82-7	Cyclohexane	N/A	U
71-43-2	Benzene	N/A	U
107-06-2	1,2-Dichloroethane	N/A	U
71-36-3	1-Butanol	N/A	U
108-10-1	Methyl isobutyl ketone	N/A	U
108-88-3	Toluene	N/A	U
108-90-7	Chlorobenzene	N/A	U
100-41-4	Ethylbenzene	N/A	U
108-38-3/106-42-3	m- and p-Xylene	N/A	U
95-47-6	o-Xylene	N/A	U
108-67-8	1,3,5-Trimethylbenzene	N/A	U
95-63-6	1,2,4-Trimethylbenzene	N/A	U

CAS Number	IDENTIFIED TIC COMPOUND	Est. Amount ppmv
N/A	N/A	N/A
N/A	N/A	N/A
N/A	N/A	N/A
N/A	N/A	N/A
N/A	N/A	N/A
N/A	N/A	N/A
N/A	N/A	N/A
N/A	N/A	N/A

Attachment E

Initial Database Query of Potential Nitrate Salt-Bearing Waste Containers

PKG_ID	WASTE_CD	Solution Package	Description	Waste Stream	Waste Type	Needs Remediation	Remediation Planned	Needs Characterization	CCP In Process
S864318	25	03	SP Unvented (AG Debris Drums)	LA-MHD01.001	Debris	1	1	0	0
S833931	25	21	SP No Issue (AG Debris)	LA-MHD01.001-Potential S3000	Debris	0	1	0	0
S791934	25	32	BG Cemented Cans	LA-CIN01.001-Cans	Solid	0	1	0	0
S791751	25	32	BG Cemented Cans	LA-CIN01.001-Cans	Solid	0	1	0	0
S791752	25	32	BG Cemented Cans	LA-CIN01.001-Cans	Solid	0	1	0	0
S791754	25	32	BG Cemented Cans	LA-CIN01.001-Cans	Solid	0	1	0	0
S791923	25	32	BG Cemented Cans	LA-CIN01.001-Cans	Solid	0	1	0	0
S791924	25	32	BG Cemented Cans	LA-CIN01.001-Cans	Solid	0	1	0	0
S791925	25	32	BG Cemented Cans	LA-CIN01.001-Cans	Solid	0	1	0	0
S791927	25	32	BG Cemented Cans	LA-CIN01.001-Cans	Solid	0	1	0	0
S790098	25	32	BG Cemented Cans	LA-CIN01.001-Cans	Solid	0	1	0	0
S791944	25	32	BG Cemented Cans	LA-CIN01.001-Cans	Solid	0	1	0	0
S791947	25	32	BG Cemented Cans	LA-CIN01.001-Cans	Solid	0	1	0	0
S791948	25	32	BG Cemented Cans	LA-CIN01.001-Cans	Solid	0	1	0	0
S791950	25	32	BG Cemented Cans	LA-CIN01.001-Cans	Solid	0	1	0	0
S791952	25	32	BG Cemented Cans	LA-CIN01.001-Cans	Solid	0	1	0	0
S791926	25	32	BG Cemented Cans	LA-CIN01.001-Cans	Solid	0	1	0	0
S790039	25	32	BG Cemented Cans	LA-CIN01.001-Cans	Solid	0	1	0	0
S790007	25	32	BG Cemented Cans	LA-CIN01.001-Cans	Solid	0	1	0	0
S790008	25	32	BG Cemented Cans	LA-CIN01.001-Cans	Solid	0	1	0	0
S790009	25	32	BG Cemented Cans	LA-CIN01.001-Cans	Solid	0	1	0	0
S790010	25	32	BG Cemented Cans	LA-CIN01.001-Cans	Solid	0	1	0	0
S790011	25	32	BG Cemented Cans	LA-CIN01.001-Cans	Solid	0	1	0	0
S791737	25	32	BG Cemented Cans	LA-CIN01.001-Cans	Solid	0	1	0	0
S790013	25	32	BG Cemented Cans	LA-CIN01.001-Cans	Solid	0	1	0	0
S791736	25	32	BG Cemented Cans	LA-CIN01.001-Cans	Solid	0	1	0	0
S790061	25	32	BG Cemented Cans	LA-CIN01.001-Cans	Solid	0	1	0	0
S790070	25	32	BG Cemented Cans	LA-CIN01.001-Cans	Solid	0	1	0	0
S790071	25	32	BG Cemented Cans	LA-CIN01.001-Cans	Solid	0	1	0	0
S790085	25	32	BG Cemented Cans	LA-CIN01.001-Cans	Solid	0	1	0	0
S790087	25	32	BG Cemented Cans	LA-CIN01.001-Cans	Solid	0	1	0	0
S793110	25	32	BG Cemented Cans	LA-CIN01.001-Cans	Solid	0	1	0	0
S790012	25	32	BG Cemented Cans	LA-CIN01.001-Cans	Solid	0	1	0	0
S793443	25	32	BG Cemented Cans	LA-CIN01.001-Cans	Solid	0	1	0	0
S793025	25	32	BG Cemented Cans	LA-CIN01.001-Cans	Solid	0	1	0	0
S793244	25	32	BG Cemented Cans	LA-CIN01.001-Cans	Solid	0	1	0	0
S793250	25	32	BG Cemented Cans	LA-CIN01.001-Cans	Solid	0	1	0	0
S793279	25	32	BG Cemented Cans	LA-CIN01.001-Cans	Solid	0	1	0	0
S793404	25	32	BG Cemented Cans	LA-CIN01.001-Cans	Solid	0	1	0	0
S793219	25	32	BG Cemented Cans	LA-CIN01.001-Cans	Solid	0	1	0	0
S793411	25	32	BG Cemented Cans	LA-CIN01.001-Cans	Solid	0	1	0	0
S793216	25	32	BG Cemented Cans	LA-CIN01.001-Cans	Solid	0	1	0	0
S793451	25	32	BG Cemented Cans	LA-CIN01.001-Cans	Solid	0	1	0	0
S793455	25	32	BG Cemented Cans	LA-CIN01.001-Cans	Solid	0	1	0	0
S793475	25	32	BG Cemented Cans	LA-CIN01.001-Cans	Solid	0	1	0	0
S793490	25	32	BG Cemented Cans	LA-CIN01.001-Cans	Solid	0	1	0	0
S793706	25	32	BG Cemented Cans	LA-CIN01.001-Cans	Solid	0	1	0	0
S793707	25	32	BG Cemented Cans	LA-CIN01.001-Cans	Solid	0	1	0	0
S793410	25	32	BG Cemented Cans	LA-CIN01.001-Cans	Solid	0	1	0	0
S793178	25	32	BG Cemented Cans	LA-CIN01.001-Cans	Solid	0	1	0	0
S793276	25	32	BG Cemented Cans	LA-CIN01.001-Cans	Solid	0	1	0	0

PKG_ID	WASTE_CD	Solution Package	Description	Waste Stream	Waste Type	Needs Remediation	Remediation Planned	Needs Characterization	CCP In Process
S793113	25	32	BG Cemented Cans	LA-CIN01.001-Cans	Solid	0	1	0	0
S793125	25	32	BG Cemented Cans	LA-CIN01.001-Cans	Solid	0	1	0	0
S793143	25	32	BG Cemented Cans	LA-CIN01.001-Cans	Solid	0	1	0	0
S793152	25	32	BG Cemented Cans	LA-CIN01.001-Cans	Solid	0	1	0	0
S793220	25	32	BG Cemented Cans	LA-CIN01.001-Cans	Solid	0	1	0	0
S793172	25	32	BG Cemented Cans	LA-CIN01.001-Cans	Solid	0	1	0	0
S793063	25	32	BG Cemented Cans	LA-CIN01.001-Cans	Solid	0	1	0	0
S793180	25	32	BG Cemented Cans	LA-CIN01.001-Cans	Solid	0	1	0	0
S793190	25	32	BG Cemented Cans	LA-CIN01.001-Cans	Solid	0	1	0	0
S793194	25	32	BG Cemented Cans	LA-CIN01.001-Cans	Solid	0	1	0	0
S793196	25	32	BG Cemented Cans	LA-CIN01.001-Cans	Solid	0	1	0	0
S793204	25	32	BG Cemented Cans	LA-CIN01.001-Cans	Solid	0	1	0	0
S793212	25	32	BG Cemented Cans	LA-CIN01.001-Cans	Solid	0	1	0	0
S793159	25	32	BG Cemented Cans	LA-CIN01.001-Cans	Solid	0	1	0	0
S793292	25	32	BG Cemented Cans	LA-CIN01.001-Cans	Solid	0	1	0	0
S835365	25	36	SP AG Cement Cans Container Issues	LA-CIN01.001-Cans	Solid	0	1	0	0
S862882	25	36	SP AG Cement Cans Container Issues	LA-CIN01.001-Cans	Solid	0	1	0	0
S832328	25	36	SP AG Cement Cans Container Issues	LA-CIN01.001-Cans	Solid	0	1	0	0
S835416	25	36	SP AG Cement Cans Container Issues	LA-CIN01.001-Cans	Solid	0	1	0	0
S835397	25	36	SP AG Cement Cans Container Issues	LA-CIN01.001-Cans	Solid	0	1	0	0
S835396	25	36	SP AG Cement Cans Container Issues	LA-CIN01.001-Cans	Solid	0	1	0	0
S833361	25	36	SP AG Cement Cans Container Issues	LA-CIN01.001-Cans	Solid	0	1	0	0
S832444	25	36	SP AG Cement Cans Container Issues	LA-CIN01.001-Cans	Solid	0	1	0	0
S853880	25	36	SP AG Cement Cans Container Issues	LA-CIN01.001-Cans	Solid	0	1	0	0
S844367	25	36	SP AG Cement Cans Container Issues	LA-CIN01.001-Cans	Solid	0	1	0	0
S844570	25	36	SP AG Cement Cans Container Issues	LA-CIN01.001-Cans	Solid	1	1	0	0
S844602	25	36	SP AG Cement Cans Container Issues	LA-CIN01.001-Cans	Solid	0	1	0	0
S832546	25	36	SP AG Cement Cans Container Issues	LA-CIN01.001-Cans	Solid	0	1	0	0
S832547	25	36	SP AG Cement Cans Container Issues	LA-CIN01.001-Cans	Solid	0	1	0	0
S822931	25	36	SP AG Cement Cans Container Issues	LA-CIN01.001-Cans	Solid	0	1	0	0
S841244	25	36	SP AG Cement Cans Container Issues	LA-CIN01.001-Cans	Solid	0	1	0	0
S844611	25	36	SP AG Cement Cans Container Issues	LA-CIN01.001-Cans	Solid	0	1	0	0
S853881	25	36	SP AG Cement Cans Container Issues	LA-CIN01.001-Cans	Solid	0	1	0	0
S862405	25	36	SP AG Cement Cans Container Issues	LA-CIN01.001-Cans	Solid	0	1	0	0
S822544	25	36	SP AG Cement Cans Container Issues	LA-CIN01.001-Cans	Solid	0	1	0	0
S825879	25	36	SP AG Cement Cans Container Issues	LA-CIN01.001-Cans	Solid	0	1	0	0
S825853	25	36	SP AG Cement Cans Container Issues	LA-CIN01.001-Cans	Solid	0	1	0	0
S825852	25	36	SP AG Cement Cans Container Issues	LA-CIN01.001-Cans	Solid	0	1	0	0
S854583	25	36	SP AG Cement Cans Container Issues	LA-CIN01.001-Cans	Solid	0	1	0	0
S825851	25	36	SP AG Cement Cans Container Issues	LA-CIN01.001-Cans	Solid	0	1	0	0
S843961	25	36	SP AG Cement Cans Container Issues	LA-CIN01.001-Cans	Solid	0	1	0	0
S843959	25	36	SP AG Cement Cans Container Issues	LA-CIN01.001-Cans	Solid	0	1	0	0
S822549	25	36	SP AG Cement Cans Container Issues	LA-CIN01.001-Cans	Solid	0	1	0	0
S843673	25	36	SP AG Cement Cans Container Issues	LA-CIN01.001-Cans	Solid	0	1	0	0
S811785	25	36	SP AG Cement Cans Container Issues	LA-CIN01.001-Cans	Solid	0	1	0	0
S833268	25	36	SP AG Cement Cans Container Issues	LA-CIN01.001-Cans	Solid	0	1	0	0
S853349	25	36	SP AG Cement Cans Container Issues	LA-CIN01.001-Cans	Solid	0	1	0	0
S844691	25	36	SP AG Cement Cans Container Issues	LA-CIN01.001-Cans	Solid	0	1	0	0
S822946	25	36	SP AG Cement Cans Container Issues	LA-CIN01.001-Cans	Solid	0	1	0	0
S833252	25	36	SP AG Cement Cans Container Issues	LA-CIN01.001-Cans	Solid	0	1	0	0
S844717	25	36	SP AG Cement Cans Container Issues	LA-CIN01.001-Cans	Solid	0	1	0	0

PKG_ID	WASTE_CD	Solution Package	Description	Waste Stream	Waste Type	Needs Remediation	Remediation Planned	Needs Characterization	CCP In Process
S844677	25	36	SP AG Cement Cans Container Issues	LA-CIN01.001-Cans	Solid	1	1	0	0
S814952	25	36	SP AG Cement Cans Container Issues	LA-CIN01.001-Cans	Solid	0	1	0	0
S833095	25	36	SP AG Cement Cans Container Issues	LA-CIN01.001-Cans	Solid	0	1	0	0
S852950	25	36	SP AG Cement Cans Container Issues	LA-CIN01.001-Cans	Solid	0	1	0	0
S852915	25	36	SP AG Cement Cans Container Issues	LA-CIN01.001-Cans	Solid	0	1	0	0
S833283	25	36	SP AG Cement Cans Container Issues	LA-CIN01.001-Cans	Solid	0	1	0	0
S833288	25	36	SP AG Cement Cans Container Issues	LA-CIN01.001-Cans	Solid	0	1	0	0
S845027	25	36	SP AG Cement Cans Container Issues	LA-CIN01.001-Cans	Solid	0	1	0	0
S845029	25	36	SP AG Cement Cans Container Issues	LA-CIN01.001-Cans	Solid	0	1	0	0
S844721	25	36	SP AG Cement Cans Container Issues	LA-CIN01.001-Cans	Solid	0	1	0	0
S844642	25	36	SP AG Cement Cans Container Issues	LA-CIN01.001-Cans	Solid	0	1	0	0
S843646	25	36	SP AG Cement Cans Container Issues	LA-CIN01.001-Cans	Solid	1	1	0	0
S863022	25	36	SP AG Cement Cans Container Issues	LA-CIN01.001-Cans	Solid	0	1	0	0
S844623	25	36	SP AG Cement Cans Container Issues	LA-CIN01.001-Cans	Solid	0	1	0	0
S844624	25	36	SP AG Cement Cans Container Issues	LA-CIN01.001-Cans	Solid	0	1	0	0
S844625	25	36	SP AG Cement Cans Container Issues	LA-CIN01.001-Cans	Solid	0	1	0	0
S844685	25	36	SP AG Cement Cans Container Issues	LA-CIN01.001-Cans	Solid	0	1	0	0
S844627	25	36	SP AG Cement Cans Container Issues	LA-CIN01.001-Cans	Solid	0	1	0	0
S844608	25	36	SP AG Cement Cans Container Issues	LA-CIN01.001-Cans	Solid	0	1	0	0
S844643	25	36	SP AG Cement Cans Container Issues	LA-CIN01.001-Cans	Solid	0	1	0	0
S853271	25	36	SP AG Cement Cans Container Issues	LA-CIN01.001-Cans	Solid	0	1	0	0
S844644	25	36	SP AG Cement Cans Container Issues	LA-CIN01.001-Cans	Solid	0	1	0	0
S833062	25	36	SP AG Cement Cans Container Issues	LA-CIN01.001-Cans	Solid	0	1	0	0
S833077	25	36	SP AG Cement Cans Container Issues	LA-CIN01.001-Cans	Solid	0	1	0	0
S833078	25	36	SP AG Cement Cans Container Issues	LA-CIN01.001-Cans	Solid	0	1	0	0
S844626	25	36	SP AG Cement Cans Container Issues	LA-CIN01.001-Cans	Solid	0	1	0	0
S871833	25	36	SP AG Cement Cans Container Issues	LA-CIN01.001-Cans	Solid	0	1	0	0
S843572	25	36	SP AG Cement Cans Container Issues	LA-CIN01.001-Cans	Solid	1	1	0	0
S860152	25	36	SP AG Cement Cans Container Issues	LA-CIN01.001-Cans	Solid	0	1	0	0
S860151	25	36	SP AG Cement Cans Container Issues	LA-CIN01.001-Cans	Solid	0	1	0	0
S822679	25	36	SP AG Cement Cans Container Issues	LA-CIN01.001-Cans	Solid	0	1	0	0
S860144	25	36	SP AG Cement Cans Container Issues	LA-CIN01.001-Cans	Solid	0	1	0	0
S843556	25	36	SP AG Cement Cans Container Issues	LA-CIN01.001-Cans	Solid	0	1	0	0
S841627	25	36	SP AG Cement Cans Container Issues	LA-CIN01.001-Cans	Solid	0	1	0	0
S822704	25	36	SP AG Cement Cans Container Issues	LA-CIN01.001-Cans	Solid	0	1	0	0
S822713	25	36	SP AG Cement Cans Container Issues	LA-CIN01.001-Cans	Solid	0	1	0	0
S822720	25	36	SP AG Cement Cans Container Issues	LA-CIN01.001-Cans	Solid	0	1	0	0
S842084	25	36	SP AG Cement Cans Container Issues	LA-CIN01.001-Cans	Solid	0	1	0	0
S855570	25	36	SP AG Cement Cans Container Issues	LA-CIN01.001-Cans	Solid	0	1	0	0
S822743	25	36	SP AG Cement Cans Container Issues	LA-CIN01.001-Cans	Solid	0	1	0	0
S843672	25	36	SP AG Cement Cans Container Issues	LA-CIN01.001-Cans	Solid	0	1	0	0
S822748	25	36	SP AG Cement Cans Container Issues	LA-CIN01.001-Cans	Solid	0	1	0	0
S870314	25	36	SP AG Cement Cans Container Issues	LA-CIN01.001-Cans	Solid	0	1	0	0
S855799	25	36	SP AG Cement Cans Container Issues	LA-CIN01.001-Cans	Solid	0	1	0	0
S846083	25	36	SP AG Cement Cans Container Issues	LA-CIN01.001-Cans	Solid	0	1	0	0
S824170	25	36	SP AG Cement Cans Container Issues	LA-CIN01.001-Cans	Solid	0	1	0	0
S823054	25	36	SP AG Cement Cans Container Issues	LA-CIN01.001-Cans	Solid	0	1	0	0
S824423	25	36	SP AG Cement Cans Container Issues	LA-CIN01.001-Cans	Solid	0	1	0	0
S822750	25	36	SP AG Cement Cans Container Issues	LA-CIN01.001-Cans	Solid	0	1	0	0
S842521	25	36	SP AG Cement Cans Container Issues	LA-CIN01.001-Cans	Solid	0	1	0	0
S855634	25	36	SP AG Cement Cans Container Issues	LA-CIN01.001-Cans	Solid	0	1	0	0

PKG_ID	WASTE_CD	Solution Package	Description	Waste Stream	Waste Type	Needs Remediation	Remediation Planned	Needs Characterization	CCP In Process
S860040	25	36	SP AG Cement Cans Container Issues	LA-CIN01.001-Cans	Solid	0	1	0	0
S860041	25	36	SP AG Cement Cans Container Issues	LA-CIN01.001-Cans	Solid	0	1	0	0
S842532	25	36	SP AG Cement Cans Container Issues	LA-CIN01.001-Cans	Solid	0	1	0	0
S824094	25	36	SP AG Cement Cans Container Issues	LA-CIN01.001-Cans	Solid	0	1	0	0
S855288	25	36	SP AG Cement Cans Container Issues	LA-CIN01.001-Cans	Solid	0	1	0	0
S824207	25	36	SP AG Cement Cans Container Issues	LA-CIN01.001-Cans	Solid	0	1	0	0
S793478	25	36	SP AG Cement Cans Container Issues	LA-CIN01.001-Cans	Solid	0	1	0	0
S860199	25	36	SP AG Cement Cans Container Issues	LA-CIN01.001-Cans	Solid	0	1	0	0
S841308	25	36	SP AG Cement Cans Container Issues	LA-CIN01.001-Cans	Solid	0	1	0	0
S855181	25	36	SP AG Cement Cans Container Issues	LA-CIN01.001-Cans	Solid	0	1	0	0
S822631	25	36	SP AG Cement Cans Container Issues	LA-CIN01.001-Cans	Solid	0	1	0	0
S855144	25	36	SP AG Cement Cans Container Issues	LA-CIN01.001-Cans	Solid	0	1	0	0
S793450	25	36	SP AG Cement Cans Container Issues	LA-CIN01.001-Cans	Solid	0	1	0	0
S822588	25	36	SP AG Cement Cans Container Issues	LA-CIN01.001-Cans	Solid	0	1	0	0
S855208	25	36	SP AG Cement Cans Container Issues	LA-CIN01.001-Cans	Solid	0	1	0	0
S825641	25	36	SP AG Cement Cans Container Issues	LA-CIN01.001-Cans	Solid	0	1	0	0
S843642	25	36	SP AG Cement Cans Container Issues	LA-CIN01.001-Cans	Solid	0	1	0	0
S843643	25	36	SP AG Cement Cans Container Issues	LA-CIN01.001-Cans	Solid	0	1	0	0
S843644	25	36	SP AG Cement Cans Container Issues	LA-CIN01.001-Cans	Solid	0	1	0	0
S825767	25	36	SP AG Cement Cans Container Issues	LA-CIN01.001-Cans	Solid	0	1	0	0
S832412	25	36	SP AG Cement Cans Container Issues	LA-CIN01.001-Cans	Solid	0	1	0	0
S822611	25	36	SP AG Cement Cans Container Issues	LA-CIN01.001-Cans	Solid	0	1	0	0
S843585	25	36	SP AG Cement Cans Container Issues	LA-CIN01.001-Cans	Solid	1	1	0	0
S854627	25	36	SP AG Cement Cans Container Issues	LA-CIN01.001-Cans	Solid	0	1	0	0
S861806	25	36	SP AG Cement Cans Container Issues	LA-CIN01.001-Cans	Solid	0	1	0	0
S861808	25	36	SP AG Cement Cans Container Issues	LA-CIN01.001-Cans	Solid	0	1	0	0
S855235	25	36	SP AG Cement Cans Container Issues	LA-CIN01.001-Cans	Solid	0	1	0	0
S822660	25	36	SP AG Cement Cans Container Issues	LA-CIN01.001-Cans	Solid	0	1	0	0
S862013	25	36	SP AG Cement Cans Container Issues	LA-CIN01.001-Cans	Solid	0	1	0	0
S842475	25	36	SP AG Cement Cans Container Issues	LA-CIN01.001-Cans	Solid	0	1	0	0
S855291	25	36	SP AG Cement Cans Container Issues	LA-CIN01.001-Cans	Solid	0	1	0	0
S855227	25	36	SP AG Cement Cans Container Issues	LA-CIN01.001-Cans	Solid	0	1	0	0
S843586	25	36	SP AG Cement Cans Container Issues	LA-CIN01.001-Cans	Solid	0	1	0	0
S855211	25	36	SP AG Cement Cans Container Issues	LA-CIN01.001-Cans	Solid	0	1	0	0
S855210	25	36	SP AG Cement Cans Container Issues	LA-CIN01.001-Cans	Solid	0	1	0	0
S855209	25	36	SP AG Cement Cans Container Issues	LA-CIN01.001-Cans	Solid	0	1	0	0
S842465	25	36	SP AG Cement Cans Container Issues	LA-CIN01.001-Cans	Solid	0	1	0	0
S822659	25	36	SP AG Cement Cans Container Issues	LA-CIN01.001-Cans	Solid	0	1	0	0
S845182	25	36	SP AG Cement Cans Container Issues	LA-CIN01.001-Cans	Solid	0	1	0	0
S845130	25	36	SP AG Cement Cans Container Issues	LA-CIN01.001-Cans	Solid	0	1	0	0
S845332	25	36	SP AG Cement Cans Container Issues	LA-CIN01.001-Cans	Solid	0	1	0	0
S864355	25	36	SP AG Cement Cans Container Issues	LA-CIN01.001-Cans	Solid	0	1	0	0
S845270	25	36	SP AG Cement Cans Container Issues	LA-CIN01.001-Cans	Solid	0	1	0	0
S845257	25	36	SP AG Cement Cans Container Issues	LA-CIN01.001-Cans	Solid	0	1	0	0
S851453	25	36	SP AG Cement Cans Container Issues	LA-CIN01.001-Cans	Solid	0	1	0	0
S833867	25	36	SP AG Cement Cans Container Issues	LA-CIN01.001-Cans	Solid	0	1	0	0
S845239	25	36	SP AG Cement Cans Container Issues	LA-CIN01.001-Cans	Solid	0	1	0	0
S864319	25	36	SP AG Cement Cans Container Issues	LA-CIN01.001-Cans	Solid	0	1	0	0
S845238	25	36	SP AG Cement Cans Container Issues	LA-CIN01.001-Cans	Solid	0	1	0	0
S851418	25	36	SP AG Cement Cans Container Issues	LA-CIN01.001-Cans	Solid	0	1	0	0
S851725	25	36	SP AG Cement Cans Container Issues	LA-CIN01.001-Cans	Solid	0	1	0	0

PKG_ID	WASTE_CD	Solution Package	Description	Waste Stream	Waste Type	Needs Remediation	Remediation Planned	Needs Characterization	CCP In Process
S834572	25	36	SP AG Cement Cans Container Issues	LA-CIN01.001-Cans	Solid	0	1	0	0
S851742	25	36	SP AG Cement Cans Container Issues	LA-CIN01.001-Cans	Solid	0	1	0	0
S851743	25	36	SP AG Cement Cans Container Issues	LA-CIN01.001-Cans	Solid	0	1	0	0
S834599	25	36	SP AG Cement Cans Container Issues	LA-CIN01.001-Cans	Solid	0	1	0	0
S845135	25	36	SP AG Cement Cans Container Issues	LA-CIN01.001-Cans	Solid	0	1	0	0
S851757	25	36	SP AG Cement Cans Container Issues	LA-CIN01.001-Cans	Solid	0	1	0	0
S842313	25	36	SP AG Cement Cans Container Issues	LA-CIN01.001-Cans	Solid	0	1	0	0
S834625	25	36	SP AG Cement Cans Container Issues	LA-CIN01.001-Cans	Solid	0	1	0	0
S845132	25	36	SP AG Cement Cans Container Issues	LA-CIN01.001-Cans	Solid	0	1	0	0
S845131	25	36	SP AG Cement Cans Container Issues	LA-CIN01.001-Cans	Solid	0	1	0	0
S851791	25	36	SP AG Cement Cans Container Issues	LA-CIN01.001-Cans	Solid	0	1	0	0
S833537	25	36	SP AG Cement Cans Container Issues	LA-CIN01.001-Cans	Solid	0	1	0	0
S845203	25	36	SP AG Cement Cans Container Issues	LA-CIN01.001-Cans	Solid	0	1	0	0
S846015	25	36	SP AG Cement Cans Container Issues	LA-CIN01.001-Cans	Solid	0	1	0	0
S834476	25	36	SP AG Cement Cans Container Issues	LA-CIN01.001-Cans	Solid	0	1	0	0
S834475	25	36	SP AG Cement Cans Container Issues	LA-CIN01.001-Cans	Solid	0	1	0	0
S846050	25	36	SP AG Cement Cans Container Issues	LA-CIN01.001-Cans	Solid	0	1	0	0
S823013	25	36	SP AG Cement Cans Container Issues	LA-CIN01.001-Cans	Solid	0	1	0	0
S846047	25	36	SP AG Cement Cans Container Issues	LA-CIN01.001-Cans	Solid	0	1	0	0
S816359	25	36	SP AG Cement Cans Container Issues	LA-CIN01.001-Cans	Solid	0	1	0	0
S846119	25	36	SP AG Cement Cans Container Issues	LA-CIN01.001-Cans	Solid	0	1	0	0
S846131	25	36	SP AG Cement Cans Container Issues	LA-CIN01.001-Cans	Solid	0	1	0	0
S803611	25	36	SP AG Cement Cans Container Issues	LA-CIN01.001-Cans	Solid	0	1	0	0
S846152	25	36	SP AG Cement Cans Container Issues	LA-CIN01.001-Cans	Solid	0	1	0	0
S845342	25	36	SP AG Cement Cans Container Issues	LA-CIN01.001-Cans	Solid	0	1	0	0
S846032	25	36	SP AG Cement Cans Container Issues	LA-CIN01.001-Cans	Solid	0	1	0	0
S845256	25	36	SP AG Cement Cans Container Issues	LA-CIN01.001-Cans	Solid	0	1	0	0
S823006	25	36	SP AG Cement Cans Container Issues	LA-CIN01.001-Cans	Solid	0	1	0	0
S803593	25	36	SP AG Cement Cans Container Issues	LA-CIN01.001-Cans	Solid	0	1	0	0
S846174	25	36	SP AG Cement Cans Container Issues	LA-CIN01.001-Cans	Solid	0	1	0	0
S846012	25	36	SP AG Cement Cans Container Issues	LA-CIN01.001-Cans	Solid	0	1	0	0
S846011	25	36	SP AG Cement Cans Container Issues	LA-CIN01.001-Cans	Solid	0	1	0	0
S846658	25	36	SP AG Cement Cans Container Issues	LA-CIN01.001-Cans	Solid	0	1	0	0
S834374	25	36	SP AG Cement Cans Container Issues	LA-CIN01.001-Cans	Solid	0	1	0	0
S846674	25	36	SP AG Cement Cans Container Issues	LA-CIN01.001-Cans	Solid	0	1	0	0
S834343	25	36	SP AG Cement Cans Container Issues	LA-CIN01.001-Cans	Solid	0	1	0	0
S845366	25	36	SP AG Cement Cans Container Issues	LA-CIN01.001-Cans	Solid	0	1	0	0
S851403	25	36	SP AG Cement Cans Container Issues	LA-CIN01.001-Cans	Solid	0	1	0	0
S846163	25	36	SP AG Cement Cans Container Issues	LA-CIN01.001-Cans	Solid	0	1	0	0
S851807	25	36	SP AG Cement Cans Container Issues	LA-CIN01.001-Cans	Solid	0	1	0	0
S833414	25	36	SP AG Cement Cans Container Issues	LA-CIN01.001-Cans	Solid	0	1	0	0
S833492	25	36	SP AG Cement Cans Container Issues	LA-CIN01.001-Cans	Solid	0	1	0	0
S833491	25	36	SP AG Cement Cans Container Issues	LA-CIN01.001-Cans	Solid	0	1	0	0
S852579	25	36	SP AG Cement Cans Container Issues	LA-CIN01.001-Cans	Solid	0	1	0	0
S845086	25	36	SP AG Cement Cans Container Issues	LA-CIN01.001-Cans	Solid	1	1	0	0
S845114	25	36	SP AG Cement Cans Container Issues	LA-CIN01.001-Cans	Solid	0	1	0	0
S852575	25	36	SP AG Cement Cans Container Issues	LA-CIN01.001-Cans	Solid	0	1	0	0
S863793	25	36	SP AG Cement Cans Container Issues	LA-CIN01.001-Cans	Solid	0	1	0	0
S851805	25	36	SP AG Cement Cans Container Issues	LA-CIN01.001-Cans	Solid	0	1	0	0
S833479	25	36	SP AG Cement Cans Container Issues	LA-CIN01.001-Cans	Solid	0	1	0	0
S863728	25	36	SP AG Cement Cans Container Issues	LA-CIN01.001-Cans	Solid	0	1	0	0

PKG_ID	WASTE_CD	Solution Package	Description	Waste Stream	Waste Type	Needs Remediation	Remediation Planned	Needs Characterization	CCP In Process
S813370	25	37	SP Unvented CIN Cans	LA-CIN01.001-Cans	Solid	1	1	0	0
S823021	25	37	SP Unvented CIN Cans	LA-CIN01.001-Cans	Solid	1	1	0	0
S802824	25	37	SP Unvented CIN Cans	LA-CIN01.001-Cans	Solid	1	1	0	0
S822906	25	37	SP Unvented CIN Cans	LA-CIN01.001-Cans	Solid	1	1	0	0
S822947	25	37	SP Unvented CIN Cans	LA-CIN01.001-Cans	Solid	1	1	0	0
S822905	25	37	SP Unvented CIN Cans	LA-CIN01.001-Cans	Solid	1	1	0	0
S833467	25	37	SP Unvented CIN Cans	LA-CIN01.001-Cans	Solid	1	1	0	0
S861805	25	37	SP Unvented CIN Cans	LA-CIN01.001-Cans	Solid	1	1	0	0
S861804	25	37	SP Unvented CIN Cans	LA-CIN01.001-Cans	Solid	1	1	0	0
S861803	25	37	SP Unvented CIN Cans	LA-CIN01.001-Cans	Solid	1	1	0	0
S822903	25	37	SP Unvented CIN Cans	LA-CIN01.001-Cans	Solid	1	1	0	0
S851404	25	37	SP Unvented CIN Cans	LA-CIN01.001-Cans	Solid	1	1	0	0
S816434	25	37	SP Unvented CIN Cans	LA-CIN01.001-Cans	Solid	1	1	0	0
S855292	25	37	SP Unvented CIN Cans	LA-CIN01.001-Cans	Solid	1	1	0	0
S822669	25	37	SP Unvented CIN Cans	LA-CIN01.001-Cans	Solid	1	1	0	0
S855307	25	37	SP Unvented CIN Cans	LA-CIN01.001-Cans	Solid	1	1	0	0
S861733	25	37	SP Unvented CIN Cans	LA-CIN01.001-Cans	Solid	1	1	0	0
S852951	25	37	SP Unvented CIN Cans	LA-CIN01.001-Cans	Solid	1	1	0	0
S822904	25	37	SP Unvented CIN Cans	LA-CIN01.001-Cans	Solid	1	1	0	0
S851414	25	37	SP Unvented CIN Cans	LA-CIN01.001-Cans	Solid	1	1	0	0
S845339	25	37	SP Unvented CIN Cans	LA-CIN01.001-Cans	Solid	1	1	0	0
S845340	25	37	SP Unvented CIN Cans	LA-CIN01.001-Cans	Solid	1	1	0	0
S845341	25	37	SP Unvented CIN Cans	LA-CIN01.001-Cans	Solid	1	1	0	0
S803078	25	37	SP Unvented CIN Cans	LA-CIN01.001-Cans	Solid	1	1	0	0
S814898	25	37	SP Unvented CIN Cans	LA-CIN01.001-Cans	Solid	1	1	0	0
S851417	25	37	SP Unvented CIN Cans	LA-CIN01.001-Cans	Solid	1	1	0	0
S825012	25	37	SP Unvented CIN Cans	LA-CIN01.001-Cans	Solid	1	1	0	0
S851416	25	37	SP Unvented CIN Cans	LA-CIN01.001-Cans	Solid	1	1	0	0
S855188	25	37	SP Unvented CIN Cans	LA-CIN01.001-Cans	Solid	1	1	0	0
S803108	25	37	SP Unvented CIN Cans	LA-CIN01.001-Cans	Solid	1	1	0	0
S851804	25	37	SP Unvented CIN Cans	LA-CIN01.001-Cans	Solid	1	1	0	0
S803147	25	37	SP Unvented CIN Cans	LA-CIN01.001-Cans	Solid	1	1	0	0
S815158	25	37	SP Unvented CIN Cans	LA-CIN01.001-Cans	Solid	1	1	0	0
S851408	25	37	SP Unvented CIN Cans	LA-CIN01.001-Cans	Solid	1	1	0	0
S822907	25	37	SP Unvented CIN Cans	LA-CIN01.001-Cans	Solid	1	1	0	0
S851406	25	37	SP Unvented CIN Cans	LA-CIN01.001-Cans	Solid	1	1	0	0
S842368	25	37	SP Unvented CIN Cans	LA-CIN01.001-Cans	Solid	1	1	0	0
S813521	25	37	SP Unvented CIN Cans	LA-CIN01.001-Cans	Solid	1	1	0	0
S863725	25	37	SP Unvented CIN Cans	LA-CIN01.001-Cans	Solid	1	1	0	0
S855308	25	37	SP Unvented CIN Cans	LA-CIN01.001-Cans	Solid	1	1	0	0
S851249	25	37	SP Unvented CIN Cans	LA-CIN01.001-Cans	Solid	1	1	0	0
S851415	25	37	SP Unvented CIN Cans	LA-CIN01.001-Cans	Solid	1	1	0	0
S805263	25	37	SP Unvented CIN Cans	LA-CIN01.001-Cans	Solid	1	1	0	0
S823020	25	37	SP Unvented CIN Cans	LA-CIN01.001-Cans	Solid	1	1	0	0
S804948	25	37	SP Unvented CIN Cans	LA-CIN01.001-Cans	Solid	1	1	0	0
S846129	25	37	SP Unvented CIN Cans	LA-CIN01.001-Cans	Solid	1	1	0	0
S814960	25	37	SP Unvented CIN Cans	LA-CIN01.001-Cans	Solid	1	1	0	0
S813545	25	37	SP Unvented CIN Cans	LA-CIN01.001-Cans	Solid	1	1	0	0
S860062	25	37	SP Unvented CIN Cans	LA-CIN01.001-Cans	Solid	1	1	0	0
S824144	25	37	SP Unvented CIN Cans	LA-CIN01.001-Cans	Solid	1	1	0	0
S813557	25	37	SP Unvented CIN Cans	LA-CIN01.001-Cans	Solid	1	1	0	0

PKG_ID	WASTE_CD	Solution Package	Description	Waste Stream	Waste Type	Needs Remediation	Remediation Planned	Needs Characterization	CCP In Process
S860157	25	37	SP Unvented CIN Cans	LA-CIN01.001-Cans	Solid	1	1	0	0
S846048	25	37	SP Unvented CIN Cans	LA-CIN01.001-Cans	Solid	1	1	0	0
S852578	25	37	SP Unvented CIN Cans	LA-CIN01.001-Cans	Solid	1	1	0	0
S852881	25	37	SP Unvented CIN Cans	LA-CIN01.001-Cans	Solid	1	1	0	0
S816326	25	37	SP Unvented CIN Cans	LA-CIN01.001-Cans	Solid	1	1	0	0
S855896	25	37	SP Unvented CIN Cans	LA-CIN01.001-Cans	Solid	1	1	0	0
S811916	25	37	SP Unvented CIN Cans	LA-CIN01.001-Cans	Solid	1	1	0	0
S804913	25	37	SP Unvented CIN Cans	LA-CIN01.001-Cans	Solid	1	1	0	0
S842089	25	37	SP Unvented CIN Cans	LA-CIN01.001-Cans	Solid	1	1	0	0
S805051	25	37	SP Unvented CIN Cans	LA-CIN01.001-Cans	Solid	1	1	0	0
S870198	25	37	SP Unvented CIN Cans	LA-CIN01.001-Cans	Solid	1	1	0	0
S834684	25	37	SP Unvented CIN Cans	LA-CIN01.001-Cans	Solid	1	1	0	0
S870379	25	37	SP Unvented CIN Cans	LA-CIN01.001-Cans	Solid	1	1	0	0
S833282	25	37	SP Unvented CIN Cans	LA-CIN01.001-Cans	Solid	1	1	0	0
S813520	25	37	SP Unvented CIN Cans	LA-CIN01.001-Cans	Solid	1	1	0	0
S855319	25	37	SP Unvented CIN Cans	LA-CIN01.001-Cans	Solid	1	1	0	0
S860158	25	37	SP Unvented CIN Cans	LA-CIN01.001-Cans	Solid	1	1	0	0
S822948	25	37	SP Unvented CIN Cans	LA-CIN01.001-Cans	Solid	1	1	0	0
S860156	25	37	SP Unvented CIN Cans	LA-CIN01.001-Cans	Solid	1	1	0	0
S813523	25	37	SP Unvented CIN Cans	LA-CIN01.001-Cans	Solid	1	1	0	0
S824665	25	37	SP Unvented CIN Cans	LA-CIN01.001-Cans	Solid	1	1	0	0
S815298	25	37	SP Unvented CIN Cans	LA-CIN01.001-Cans	Solid	1	1	0	0
S852574	25	37	SP Unvented CIN Cans	LA-CIN01.001-Cans	Solid	1	1	0	0
S824421	25	37	SP Unvented CIN Cans	LA-CIN01.001-Cans	Solid	1	1	0	0
S852929	25	37	SP Unvented CIN Cans	LA-CIN01.001-Cans	Solid	1	1	0	0
S802852	25	37	SP Unvented CIN Cans	LA-CIN01.001-Cans	Solid	1	1	0	0
S813570	25	37	SP Unvented CIN Cans	LA-CIN01.001-Cans	Solid	1	1	0	0
S803605	25	37	SP Unvented CIN Cans	LA-CIN01.001-Cans	Solid	1	1	0	0
S802851	25	37	SP Unvented CIN Cans	LA-CIN01.001-Cans	Solid	1	1	0	0
S824562	25	37	SP Unvented CIN Cans	LA-CIN01.001-Cans	Solid	1	1	0	0
S852914	25	37	SP Unvented CIN Cans	LA-CIN01.001-Cans	Solid	1	1	0	0
S833425	25	37	SP Unvented CIN Cans	LA-CIN01.001-Cans	Solid	1	1	0	0
S855569	25	37	SP Unvented CIN Cans	LA-CIN01.001-Cans	Solid	1	1	0	0
S863660	25	37	SP Unvented CIN Cans	LA-CIN01.001-Cans	Solid	1	1	0	0
S813595	25	37	SP Unvented CIN Cans	LA-CIN01.001-Cans	Solid	1	1	0	0
S802833	25	37	SP Unvented CIN Cans	LA-CIN01.001-Cans	Solid	1	1	0	0
S811747	25	37	SP Unvented CIN Cans	LA-CIN01.001-Cans	Solid	1	1	0	0
S818415	25	37	SP Unvented CIN Cans	LA-CIN01.001-Cans	Solid	1	1	0	0
S853714	25	37	SP Unvented CIN Cans	LA-CIN01.001-Cans	Solid	1	1	0	0
S818303	25	37	SP Unvented CIN Cans	LA-CIN01.001-Cans	Solid	1	1	0	0
S853724	25	37	SP Unvented CIN Cans	LA-CIN01.001-Cans	Solid	1	1	0	0
S832289	25	37	SP Unvented CIN Cans	LA-CIN01.001-Cans	Solid	1	1	0	0
S862887	25	37	SP Unvented CIN Cans	LA-CIN01.001-Cans	Solid	1	1	0	0
S802605	25	37	SP Unvented CIN Cans	LA-CIN01.001-Cans	Solid	1	1	0	0
S851724	25	37	SP Unvented CIN Cans	LA-CIN01.001-Cans	Solid	1	1	0	0
S832270	25	37	SP Unvented CIN Cans	LA-CIN01.001-Cans	Solid	1	1	0	0
S840796	25	37	SP Unvented CIN Cans	LA-CIN01.001-Cans	Solid	1	1	0	0
S802575	25	37	SP Unvented CIN Cans	LA-CIN01.001-Cans	Solid	1	1	0	0
S853647	25	37	SP Unvented CIN Cans	LA-CIN01.001-Cans	Solid	1	1	0	0
S851413	25	37	SP Unvented CIN Cans	LA-CIN01.001-Cans	Solid	1	1	0	0
S804965	25	37	SP Unvented CIN Cans	LA-CIN01.001-Cans	Solid	1	1	0	0

PKG_ID	WASTE_CD	Solution Package	Description	Waste Stream	Waste Type	Needs Remediation	Remediation Planned	Needs Characterization	CCP In Process
S802769	25	37	SP Unvented CIN Cans	LA-CIN01.001-Cans	Solid	1	1	0	0
S818368	25	37	SP Unvented CIN Cans	LA-CIN01.001-Cans	Solid	1	1	0	0
S853826	25	37	SP Unvented CIN Cans	LA-CIN01.001-Cans	Solid	1	1	0	0
S813389	25	37	SP Unvented CIN Cans	LA-CIN01.001-Cans	Solid	1	1	0	0
S804957	25	37	SP Unvented CIN Cans	LA-CIN01.001-Cans	Solid	1	1	0	0
S801676	25	37	SP Unvented CIN Cans	LA-CIN01.001-Cans	Solid	1	1	0	0
S851722	25	37	SP Unvented CIN Cans	LA-CIN01.001-Cans	Solid	1	1	0	0
S853848	25	37	SP Unvented CIN Cans	LA-CIN01.001-Cans	Solid	1	1	0	0
S853849	25	37	SP Unvented CIN Cans	LA-CIN01.001-Cans	Solid	1	1	0	0
S853851	25	37	SP Unvented CIN Cans	LA-CIN01.001-Cans	Solid	1	1	0	0
S818406	25	37	SP Unvented CIN Cans	LA-CIN01.001-Cans	Solid	1	1	0	0
S818412	25	37	SP Unvented CIN Cans	LA-CIN01.001-Cans	Solid	1	1	0	0
S832240	25	37	SP Unvented CIN Cans	LA-CIN01.001-Cans	Solid	1	1	0	0
S816925	25	37	SP Unvented CIN Cans	LA-CIN01.001-Cans	Solid	1	1	0	0
S815122	25	37	SP Unvented CIN Cans	LA-CIN01.001-Cans	Solid	1	1	0	0
S802739	25	37	SP Unvented CIN Cans	LA-CIN01.001-Cans	Solid	1	1	0	0
S863797	25	37	SP Unvented CIN Cans	LA-CIN01.001-Cans	Solid	1	1	0	0
S814871	25	37	SP Unvented CIN Cans	LA-CIN01.001-Cans	Solid	1	1	0	0
S832551	25	37	SP Unvented CIN Cans	LA-CIN01.001-Cans	Solid	1	1	0	0
S814860	25	37	SP Unvented CIN Cans	LA-CIN01.001-Cans	Solid	1	1	0	0
S815124	25	37	SP Unvented CIN Cans	LA-CIN01.001-Cans	Solid	1	1	0	0
S851840	25	37	SP Unvented CIN Cans	LA-CIN01.001-Cans	Solid	1	1	0	0
S833030	25	37	SP Unvented CIN Cans	LA-CIN01.001-Cans	Solid	1	1	0	0
S853453	25	37	SP Unvented CIN Cans	LA-CIN01.001-Cans	Solid	1	1	0	0
S802718	25	37	SP Unvented CIN Cans	LA-CIN01.001-Cans	Solid	1	1	0	0
S815045	25	37	SP Unvented CIN Cans	LA-CIN01.001-Cans	Solid	1	1	0	0
S802701	25	37	SP Unvented CIN Cans	LA-CIN01.001-Cans	Solid	1	1	0	0
S811749	25	37	SP Unvented CIN Cans	LA-CIN01.001-Cans	Solid	1	1	0	0
S851758	25	37	SP Unvented CIN Cans	LA-CIN01.001-Cans	Solid	1	1	0	0
S844645	25	37	SP Unvented CIN Cans	LA-CIN01.001-Cans	Solid	1	1	0	0
S844355	25	37	SP Unvented CIN Cans	LA-CIN01.001-Cans	Solid	1	1	0	0
S853546	25	37	SP Unvented CIN Cans	LA-CIN01.001-Cans	Solid	1	1	0	0
S805293	25	37	SP Unvented CIN Cans	LA-CIN01.001-Cans	Solid	1	1	0	0
S813412	25	37	SP Unvented CIN Cans	LA-CIN01.001-Cans	Solid	1	1	0	0
S802665	25	37	SP Unvented CIN Cans	LA-CIN01.001-Cans	Solid	1	1	0	0
S817483	25	37	SP Unvented CIN Cans	LA-CIN01.001-Cans	Solid	1	1	0	0
S816810	25	37	SP Unvented CIN Cans	LA-CIN01.001-Cans	Solid	1	1	0	0
S818270	25	37	SP Unvented CIN Cans	LA-CIN01.001-Cans	Solid	1	1	0	0
S814873	25	37	SP Unvented CIN Cans	LA-CIN01.001-Cans	Solid	1	1	0	0
S855798	25	37	SP Unvented CIN Cans	LA-CIN01.001-Cans	Solid	1	1	0	0
S816910	25	37	SP Unvented CIN Cans	LA-CIN01.001-Cans	Solid	1	1	0	0
S825824	25	37	SP Unvented CIN Cans	LA-CIN01.001-Cans	Solid	1	1	0	0
S813471	25	37	SP Unvented CIN Cans	LA-CIN01.001-Cans	Solid	1	1	0	0
S816881	25	37	SP Unvented CIN Cans	LA-CIN01.001-Cans	Solid	1	1	0	0
S851607	25	37	SP Unvented CIN Cans	LA-CIN01.001-Cans	Solid	1	1	0	0
S851606	25	37	SP Unvented CIN Cans	LA-CIN01.001-Cans	Solid	1	1	0	0
S825878	25	37	SP Unvented CIN Cans	LA-CIN01.001-Cans	Solid	1	1	0	0
S852596	25	37	SP Unvented CIN Cans	LA-CIN01.001-Cans	Solid	1	1	0	0
S818447	25	37	SP Unvented CIN Cans	LA-CIN01.001-Cans	Solid	1	1	0	0
S854606	25	37	SP Unvented CIN Cans	LA-CIN01.001-Cans	Solid	1	1	0	0
S862398	25	37	SP Unvented CIN Cans	LA-CIN01.001-Cans	Solid	1	1	0	0

PKG_ID	WASTE_CD	Solution Package	Description	Waste Stream	Waste Type	Needs Remediation	Remediation Planned	Needs Characterization	CCP In Process
S793723	25	37	SP Unvented CIN Cans	LA-CIN01.001-Cans	Solid	1	1	0	0
S816696	25	37	SP Unvented CIN Cans	LA-CIN01.001-Cans	Solid	1	1	0	0
S852978	25	37	SP Unvented CIN Cans	LA-CIN01.001-Cans	Solid	1	1	0	0
S852977	25	37	SP Unvented CIN Cans	LA-CIN01.001-Cans	Solid	1	1	0	0
S815157	25	37	SP Unvented CIN Cans	LA-CIN01.001-Cans	Solid	1	1	0	0
S845255	25	37	SP Unvented CIN Cans	LA-CIN01.001-Cans	Solid	1	1	0	0
S793724	25	37	SP Unvented CIN Cans	LA-CIN01.001-Cans	Solid	1	1	0	0
S862309	25	37	SP Unvented CIN Cans	LA-CIN01.001-Cans	Solid	1	1	0	0
S804995	25	37	SP Unvented CIN Cans	LA-CIN01.001-Cans	Solid	1	1	0	0
S853882	25	37	SP Unvented CIN Cans	LA-CIN01.001-Cans	Solid	1	1	0	0
S814887	25	37	SP Unvented CIN Cans	LA-CIN01.001-Cans	Solid	1	1	0	0
S802768	25	37	SP Unvented CIN Cans	LA-CIN01.001-Cans	Solid	1	1	0	0
S805289	25	37	SP Unvented CIN Cans	LA-CIN01.001-Cans	Solid	1	1	0	0
S862404	25	37	SP Unvented CIN Cans	LA-CIN01.001-Cans	Solid	1	1	0	0
S851608	25	37	SP Unvented CIN Cans	LA-CIN01.001-Cans	Solid	1	1	0	0
S851721	25	37	SP Unvented CIN Cans	LA-CIN01.001-Cans	Solid	1	1	0	0
S813385	25	37	SP Unvented CIN Cans	LA-CIN01.001-Cans	Solid	1	1	0	0
S813411	25	37	SP Unvented CIN Cans	LA-CIN01.001-Cans	Solid	1	1	0	0
S815032	25	37	SP Unvented CIN Cans	LA-CIN01.001-Cans	Solid	1	1	0	0
S842188	25	40	SP Retrieve and Vent BG Trench	LA-CIN01.001-Cans	Solid	1	1	0	0
S845076	25	40	SP Retrieve and Vent BG Trench	LA-CIN01.001-Cans	Solid	1	1	0	0
S793769	25	40	SP Retrieve and Vent BG Trench	LA-CIN01.001-Cans	Solid	1	1	0	0
S846104	25	40	SP Retrieve and Vent BG Trench	LA-CIN01.001-Cans	Solid	1	1	0	0
S803091	25	40	SP Retrieve and Vent BG Trench	LA-CIN01.001-Cans	Solid	1	1	0	0
S793768	25	40	SP Retrieve and Vent BG Trench	LA-CIN01.001-Cans	Solid	1	1	0	0
S832274	25	40	SP Retrieve and Vent BG Trench	LA-CIN01.001-Cans	Solid	1	1	0	0
S824154	25	40	SP Retrieve and Vent BG Trench	LA-CIN01.001-Cans	Solid	1	1	0	0
S846105	25	40	SP Retrieve and Vent BG Trench	LA-CIN01.001-Cans	Solid	1	1	0	0
S822560	25	40	SP Retrieve and Vent BG Trench	LA-CIN01.001-Cans	Solid	1	1	0	0
S816426	25	40	SP Retrieve and Vent BG Trench	LA-CIN01.001-Cans	Solid	1	1	0	0
S822540	25	40	SP Retrieve and Vent BG Trench	LA-CIN01.001-Cans	Solid	1	1	0	0
S802571	25	40	SP Retrieve and Vent BG Trench	LA-CIN01.001-Cans	Solid	1	1	0	0
S844290	25	40	SP Retrieve and Vent BG Trench	LA-CIN01.001-Cans	Solid	1	1	0	0
S001674	25	41	SP Retrieve and Vent BG Solids	TA-21 Homogeneous	Solid	1	1	0	0
S001673	25	41	SP Retrieve and Vent BG Solids	TA-21 Homogeneous	Solid	1	1	0	0
S001672	25	41	SP Retrieve and Vent BG Solids	TA-21 Homogeneous	Solid	1	1	0	0
S001675	25	41	SP Retrieve and Vent BG Solids	TA-21 Homogeneous	Solid	1	1	0	0
S001676	25	41	SP Retrieve and Vent BG Solids	TA-21 Homogeneous	Solid	1	1	0	0
S001677	25	41	SP Retrieve and Vent BG Solids	TA-21 Homogeneous	Solid	1	1	0	0
S001678	25	41	SP Retrieve and Vent BG Solids	TA-21 Homogeneous	Solid	1	1	0	0
S000456	25	41	SP Retrieve and Vent BG Solids	TA-21 Homogeneous	Solid	1	1	0	0
S001679	25	41	SP Retrieve and Vent BG Solids	TA-21 Homogeneous	Solid	1	1	0	0
S000451	25	41	SP Retrieve and Vent BG Solids	TA-21 Homogeneous	Solid	1	1	0	0
S001680	25	41	SP Retrieve and Vent BG Solids	TA-21 Homogeneous	Solid	1	1	0	0
S000449	25	41	SP Retrieve and Vent BG Solids	TA-21 Homogeneous	Solid	1	1	0	0
S000450	25	41	SP Retrieve and Vent BG Solids	TA-21 Homogeneous	Solid	1	1	0	0
S001696	25	41	SP Retrieve and Vent BG Solids	TA-21 Homogeneous	Solid	1	1	0	0
S001681	25	41	SP Retrieve and Vent BG Solids	TA-21 Homogeneous	Solid	1	1	0	0
S001682	25	41	SP Retrieve and Vent BG Solids	TA-21 Homogeneous	Solid	1	1	0	0
S000466	25	41	SP Retrieve and Vent BG Solids	TA-21 Homogeneous	Solid	1	1	0	0
S000484	25	41	SP Retrieve and Vent BG Solids	TA-21 Homogeneous	Solid	1	1	0	0

PKG_ID	WASTE_CD	Solution Package	Description	Waste Stream	Waste Type	Needs Remediation	Remediation Planned	Needs Characterization	CCP In Process
S001661	25	41	SP Retrieve and Vent BG Solids	TA-21 Homogeneous	Solid	1	1	0	0
S001662	25	41	SP Retrieve and Vent BG Solids	TA-21 Homogeneous	Solid	1	1	0	0
S000587	25	41	SP Retrieve and Vent BG Solids	TA-21 Homogeneous	Solid	1	1	0	0
S000586	25	41	SP Retrieve and Vent BG Solids	TA-21 Homogeneous	Solid	0	1	0	0
S000567	25	41	SP Retrieve and Vent BG Solids	TA-21 Homogeneous	Solid	1	1	0	0
S000566	25	41	SP Retrieve and Vent BG Solids	TA-21 Homogeneous	Solid	1	1	0	0
S000561	25	41	SP Retrieve and Vent BG Solids	TA-21 Homogeneous	Solid	1	1	0	0
S000549	25	41	SP Retrieve and Vent BG Solids	TA-21 Homogeneous	Solid	1	1	0	0
S000526	25	41	SP Retrieve and Vent BG Solids	TA-21 Homogeneous	Solid	1	1	0	0
S000518	25	41	SP Retrieve and Vent BG Solids	TA-21 Homogeneous	Solid	1	1	0	0
S000514	25	41	SP Retrieve and Vent BG Solids	TA-21 Homogeneous	Solid	1	1	0	0
S001665	25	41	SP Retrieve and Vent BG Solids	TA-21 Homogeneous	Solid	1	1	0	0
S000496	25	41	SP Retrieve and Vent BG Solids	TA-21 Homogeneous	Solid	1	1	0	0
S001671	25	41	SP Retrieve and Vent BG Solids	TA-21 Homogeneous	Solid	1	1	0	0
S000483	25	41	SP Retrieve and Vent BG Solids	TA-21 Homogeneous	Solid	1	1	0	0
S001683	25	41	SP Retrieve and Vent BG Solids	TA-21 Homogeneous	Solid	1	1	0	0
S001663	25	41	SP Retrieve and Vent BG Solids	TA-21 Homogeneous	Solid	1	1	0	0
S000481	25	41	SP Retrieve and Vent BG Solids	TA-21 Homogeneous	Solid	1	1	0	0
S001664	25	41	SP Retrieve and Vent BG Solids	TA-21 Homogeneous	Solid	1	1	0	0
S001666	25	41	SP Retrieve and Vent BG Solids	TA-21 Homogeneous	Solid	1	1	0	0
S001667	25	41	SP Retrieve and Vent BG Solids	TA-21 Homogeneous	Solid	1	1	0	0
S000468	25	41	SP Retrieve and Vent BG Solids	TA-21 Homogeneous	Solid	1	1	0	0
S001668	25	41	SP Retrieve and Vent BG Solids	TA-21 Homogeneous	Solid	1	1	0	0
S000439	25	41	SP Retrieve and Vent BG Solids	TA-21 Homogeneous	Solid	1	1	0	0
S000442	25	41	SP Retrieve and Vent BG Solids	TA-21 Homogeneous	Solid	1	1	0	0
S001670	25	41	SP Retrieve and Vent BG Solids	TA-21 Homogeneous	Solid	1	1	0	0
S000502	25	41	SP Retrieve and Vent BG Solids	TA-21 Homogeneous	Solid	1	1	0	0
S001853	25	41	SP Retrieve and Vent BG Solids	TA-21 Homogeneous	Solid	1	1	0	0
S001888	25	41	SP Retrieve and Vent BG Solids	TA-21 Homogeneous	Solid	1	1	0	0
S001825	25	41	SP Retrieve and Vent BG Solids	TA-21 Homogeneous	Solid	0	1	0	0
S001826	25	41	SP Retrieve and Vent BG Solids	TA-21 Homogeneous	Solid	1	1	0	0
S001827	25	41	SP Retrieve and Vent BG Solids	TA-21 Homogeneous	Solid	1	1	0	0
S001829	25	41	SP Retrieve and Vent BG Solids	TA-21 Homogeneous	Solid	1	1	0	0
S001837	25	41	SP Retrieve and Vent BG Solids	TA-21 Homogeneous	Solid	1	1	0	0
S001840	25	41	SP Retrieve and Vent BG Solids	TA-21 Homogeneous	Solid	1	1	0	0
S001841	25	41	SP Retrieve and Vent BG Solids	TA-21 Homogeneous	Solid	1	1	0	0
S001842	25	41	SP Retrieve and Vent BG Solids	TA-21 Homogeneous	Solid	1	1	0	0
S001819	25	41	SP Retrieve and Vent BG Solids	TA-21 Homogeneous	Solid	1	1	0	0
S001849	25	41	SP Retrieve and Vent BG Solids	TA-21 Homogeneous	Solid	1	1	0	0
S001818	25	41	SP Retrieve and Vent BG Solids	TA-21 Homogeneous	Solid	1	1	0	0
S001854	25	41	SP Retrieve and Vent BG Solids	TA-21 Homogeneous	Solid	1	1	0	0
S001855	25	41	SP Retrieve and Vent BG Solids	TA-21 Homogeneous	Solid	1	1	0	0
S001863	25	41	SP Retrieve and Vent BG Solids	TA-21 Homogeneous	Solid	0	1	0	0
S001864	25	41	SP Retrieve and Vent BG Solids	TA-21 Homogeneous	Solid	0	1	0	0
S001866	25	41	SP Retrieve and Vent BG Solids	TA-21 Homogeneous	Solid	0	1	0	0
S001869	25	41	SP Retrieve and Vent BG Solids	TA-21 Homogeneous	Solid	1	1	0	0
S001870	25	41	SP Retrieve and Vent BG Solids	TA-21 Homogeneous	Solid	1	1	0	0
S001875	25	41	SP Retrieve and Vent BG Solids	TA-21 Homogeneous	Solid	1	1	0	0
S001877	25	41	SP Retrieve and Vent BG Solids	TA-21 Homogeneous	Solid	1	1	0	0
S001791	25	41	SP Retrieve and Vent BG Solids	TA-21 Homogeneous	Solid	1	1	0	0
S001847	25	41	SP Retrieve and Vent BG Solids	TA-21 Homogeneous	Solid	1	1	0	0

PKG_ID	WASTE_CD	Solution Package	Description	Waste Stream	Waste Type	Needs Remediation	Remediation Planned	Needs Characterization	CCP In Process
S001803	25	41	SP Retrieve and Vent BG Solids	TA-21 Homogeneous	Solid	0	1	0	0
S730371	25	41	SP Retrieve and Vent BG Solids	TA-21 Homogeneous	Solid	1	1	0	0
S001793	25	41	SP Retrieve and Vent BG Solids	TA-21 Homogeneous	Solid	0	1	0	0
S001794	25	41	SP Retrieve and Vent BG Solids	TA-21 Homogeneous	Solid	1	1	0	0
S001795	25	41	SP Retrieve and Vent BG Solids	TA-21 Homogeneous	Solid	1	1	0	0
S001796	25	41	SP Retrieve and Vent BG Solids	TA-21 Homogeneous	Solid	1	1	0	0
S001797	25	41	SP Retrieve and Vent BG Solids	TA-21 Homogeneous	Solid	0	1	0	0
S001798	25	41	SP Retrieve and Vent BG Solids	TA-21 Homogeneous	Solid	1	1	0	0
S001799	25	41	SP Retrieve and Vent BG Solids	TA-21 Homogeneous	Solid	1	1	0	0
S001800	25	41	SP Retrieve and Vent BG Solids	TA-21 Homogeneous	Solid	1	1	0	0
S001824	25	41	SP Retrieve and Vent BG Solids	TA-21 Homogeneous	Solid	0	1	0	0
S001802	25	41	SP Retrieve and Vent BG Solids	TA-21 Homogeneous	Solid	1	1	0	0
S001899	25	41	SP Retrieve and Vent BG Solids	TA-21 Homogeneous	Solid	1	1	0	0
S001804	25	41	SP Retrieve and Vent BG Solids	TA-21 Homogeneous	Solid	1	1	0	0
S001805	25	41	SP Retrieve and Vent BG Solids	TA-21 Homogeneous	Solid	0	1	0	0
S001806	25	41	SP Retrieve and Vent BG Solids	TA-21 Homogeneous	Solid	1	1	0	0
S001807	25	41	SP Retrieve and Vent BG Solids	TA-21 Homogeneous	Solid	1	1	0	0
S001808	25	41	SP Retrieve and Vent BG Solids	TA-21 Homogeneous	Solid	1	1	0	0
S001809	25	41	SP Retrieve and Vent BG Solids	TA-21 Homogeneous	Solid	0	1	0	0
S001810	25	41	SP Retrieve and Vent BG Solids	TA-21 Homogeneous	Solid	0	1	0	0
S001811	25	41	SP Retrieve and Vent BG Solids	TA-21 Homogeneous	Solid	0	1	0	0
S001813	25	41	SP Retrieve and Vent BG Solids	TA-21 Homogeneous	Solid	0	1	0	0
S001814	25	41	SP Retrieve and Vent BG Solids	TA-21 Homogeneous	Solid	1	1	0	0
S001801	25	41	SP Retrieve and Vent BG Solids	TA-21 Homogeneous	Solid	1	1	0	0
S730356	25	41	SP Retrieve and Vent BG Solids	TA-21 Homogeneous	Solid	1	1	0	0
S001884	25	41	SP Retrieve and Vent BG Solids	TA-21 Homogeneous	Solid	1	1	0	0
S730329	25	41	SP Retrieve and Vent BG Solids	TA-21 Homogeneous	Solid	1	1	0	0
S730330	25	41	SP Retrieve and Vent BG Solids	TA-21 Homogeneous	Solid	0	1	0	0
S730343	25	41	SP Retrieve and Vent BG Solids	TA-21 Homogeneous	Solid	1	1	0	0
S730346	25	41	SP Retrieve and Vent BG Solids	TA-21 Homogeneous	Solid	1	1	0	0
S730347	25	41	SP Retrieve and Vent BG Solids	TA-21 Homogeneous	Solid	0	1	0	0
S730348	25	41	SP Retrieve and Vent BG Solids	TA-21 Homogeneous	Solid	0	1	0	0
S730349	25	41	SP Retrieve and Vent BG Solids	TA-21 Homogeneous	Solid	0	1	0	0
S730351	25	41	SP Retrieve and Vent BG Solids	TA-21 Homogeneous	Solid	0	1	0	0
S720986	25	41	SP Retrieve and Vent BG Solids	TA-21 Homogeneous	Solid	1	1	0	0
S730355	25	41	SP Retrieve and Vent BG Solids	TA-21 Homogeneous	Solid	1	1	0	0
S720985	25	41	SP Retrieve and Vent BG Solids	TA-21 Homogeneous	Solid	0	1	0	0
S730357	25	41	SP Retrieve and Vent BG Solids	TA-21 Homogeneous	Solid	0	1	0	0
S730358	25	41	SP Retrieve and Vent BG Solids	TA-21 Homogeneous	Solid	1	1	0	0
S730359	25	41	SP Retrieve and Vent BG Solids	TA-21 Homogeneous	Solid	0	1	0	0
S730360	25	41	SP Retrieve and Vent BG Solids	TA-21 Homogeneous	Solid	0	1	0	0
S730362	25	41	SP Retrieve and Vent BG Solids	TA-21 Homogeneous	Solid	0	1	0	0
S730366	25	41	SP Retrieve and Vent BG Solids	TA-21 Homogeneous	Solid	0	1	0	0
S730367	25	41	SP Retrieve and Vent BG Solids	TA-21 Homogeneous	Solid	1	1	0	0
S730368	25	41	SP Retrieve and Vent BG Solids	TA-21 Homogeneous	Solid	1	1	0	0
S730369	25	41	SP Retrieve and Vent BG Solids	TA-21 Homogeneous	Solid	1	1	0	0
S730370	25	41	SP Retrieve and Vent BG Solids	TA-21 Homogeneous	Solid	1	1	0	0
S001684	25	41	SP Retrieve and Vent BG Solids	TA-21 Homogeneous	Solid	1	1	0	0
S002620	25	41	SP Retrieve and Vent BG Solids	TA-21 Homogeneous	Solid	0	1	0	0
S001900	25	41	SP Retrieve and Vent BG Solids	TA-21 Homogeneous	Solid	1	1	0	0
S001915	25	41	SP Retrieve and Vent BG Solids	TA-21 Homogeneous	Solid	1	1	0	0

PKG_ID	WASTE_CD	Solution Package	Description	Waste Stream	Waste Type	Needs Remediation	Remediation Planned	Needs Characterization	CCP In Process
S001916	25	41	SP Retrieve and Vent BG Solids	TA-21 Homogeneous	Solid	1	1	0	0
S001924	25	41	SP Retrieve and Vent BG Solids	TA-21 Homogeneous	Solid	1	1	0	0
S002502	25	41	SP Retrieve and Vent BG Solids	TA-21 Homogeneous	Solid	0	1	0	0
S002519	25	41	SP Retrieve and Vent BG Solids	TA-21 Homogeneous	Solid	0	1	0	0
S002529	25	41	SP Retrieve and Vent BG Solids	TA-21 Homogeneous	Solid	0	1	0	0
S002552	25	41	SP Retrieve and Vent BG Solids	TA-21 Homogeneous	Solid	0	1	0	0
S002568	25	41	SP Retrieve and Vent BG Solids	TA-21 Homogeneous	Solid	0	1	0	0
S730328	25	41	SP Retrieve and Vent BG Solids	TA-21 Homogeneous	Solid	1	1	0	0
S002597	25	41	SP Retrieve and Vent BG Solids	TA-21 Homogeneous	Solid	1	1	0	0
S001790	25	41	SP Retrieve and Vent BG Solids	TA-21 Homogeneous	Solid	0	1	0	0
S002654	25	41	SP Retrieve and Vent BG Solids	TA-21 Homogeneous	Solid	1	1	0	0
S002655	25	41	SP Retrieve and Vent BG Solids	TA-21 Homogeneous	Solid	1	1	0	0
S002705	25	41	SP Retrieve and Vent BG Solids	TA-21 Homogeneous	Solid	1	1	0	0
S002715	25	41	SP Retrieve and Vent BG Solids	TA-21 Homogeneous	Solid	1	1	0	0
S002783	25	41	SP Retrieve and Vent BG Solids	TA-21 Homogeneous	Solid	1	1	0	0
S002795	25	41	SP Retrieve and Vent BG Solids	TA-21 Homogeneous	Solid	0	1	0	0
S002796	25	41	SP Retrieve and Vent BG Solids	TA-21 Homogeneous	Solid	0	1	0	0
S002826	25	41	SP Retrieve and Vent BG Solids	TA-21 Homogeneous	Solid	0	1	0	0
S002832	25	41	SP Retrieve and Vent BG Solids	TA-21 Homogeneous	Solid	0	1	0	0
S002848	25	41	SP Retrieve and Vent BG Solids	TA-21 Homogeneous	Solid	0	1	0	0
S002575	25	41	SP Retrieve and Vent BG Solids	TA-21 Homogeneous	Solid	0	1	0	0
S001732	25	41	SP Retrieve and Vent BG Solids	TA-21 Homogeneous	Solid	0	1	0	0
S001743	25	41	SP Retrieve and Vent BG Solids	TA-21 Homogeneous	Solid	1	1	0	0
S001722	25	41	SP Retrieve and Vent BG Solids	TA-21 Homogeneous	Solid	1	1	0	0
S001723	25	41	SP Retrieve and Vent BG Solids	TA-21 Homogeneous	Solid	1	1	0	0
S001724	25	41	SP Retrieve and Vent BG Solids	TA-21 Homogeneous	Solid	1	1	0	0
S001725	25	41	SP Retrieve and Vent BG Solids	TA-21 Homogeneous	Solid	1	1	0	0
S001726	25	41	SP Retrieve and Vent BG Solids	TA-21 Homogeneous	Solid	0	1	0	0
S001727	25	41	SP Retrieve and Vent BG Solids	TA-21 Homogeneous	Solid	0	1	0	0
S001728	25	41	SP Retrieve and Vent BG Solids	TA-21 Homogeneous	Solid	1	1	0	0
S001729	25	41	SP Retrieve and Vent BG Solids	TA-21 Homogeneous	Solid	0	1	0	0
S001720	25	41	SP Retrieve and Vent BG Solids	TA-21 Homogeneous	Solid	1	1	0	0
S001731	25	41	SP Retrieve and Vent BG Solids	TA-21 Homogeneous	Solid	0	1	0	0
S001719	25	41	SP Retrieve and Vent BG Solids	TA-21 Homogeneous	Solid	1	1	0	0
S001733	25	41	SP Retrieve and Vent BG Solids	TA-21 Homogeneous	Solid	0	1	0	0
S001734	25	41	SP Retrieve and Vent BG Solids	TA-21 Homogeneous	Solid	0	1	0	0
S001735	25	41	SP Retrieve and Vent BG Solids	TA-21 Homogeneous	Solid	0	1	0	0
S001736	25	41	SP Retrieve and Vent BG Solids	TA-21 Homogeneous	Solid	1	1	0	0
S001737	25	41	SP Retrieve and Vent BG Solids	TA-21 Homogeneous	Solid	1	1	0	0
S001738	25	41	SP Retrieve and Vent BG Solids	TA-21 Homogeneous	Solid	1	1	0	0
S001739	25	41	SP Retrieve and Vent BG Solids	TA-21 Homogeneous	Solid	1	1	0	0
S001740	25	41	SP Retrieve and Vent BG Solids	TA-21 Homogeneous	Solid	0	1	0	0
S001741	25	41	SP Retrieve and Vent BG Solids	TA-21 Homogeneous	Solid	1	1	0	0
S001792	25	41	SP Retrieve and Vent BG Solids	TA-21 Homogeneous	Solid	1	1	0	0
S001730	25	41	SP Retrieve and Vent BG Solids	TA-21 Homogeneous	Solid	0	1	0	0
S001708	25	41	SP Retrieve and Vent BG Solids	TA-21 Homogeneous	Solid	1	1	0	0
S001697	25	41	SP Retrieve and Vent BG Solids	TA-21 Homogeneous	Solid	0	1	0	0
S001698	25	41	SP Retrieve and Vent BG Solids	TA-21 Homogeneous	Solid	0	1	0	0
S001699	25	41	SP Retrieve and Vent BG Solids	TA-21 Homogeneous	Solid	1	1	0	0
S001700	25	41	SP Retrieve and Vent BG Solids	TA-21 Homogeneous	Solid	0	1	0	0
S001701	25	41	SP Retrieve and Vent BG Solids	TA-21 Homogeneous	Solid	1	1	0	0

PKG_ID	WASTE_CD	Solution Package	Description	Waste Stream	Waste Type	Needs Remediation	Remediation Planned	Needs Characterization	CCP In Process
S001702	25	41	SP Retrieve and Vent BG Solids	TA-21 Homogeneous	Solid	0	1	0	0
S001703	25	41	SP Retrieve and Vent BG Solids	TA-21 Homogeneous	Solid	0	1	0	0
S001704	25	41	SP Retrieve and Vent BG Solids	TA-21 Homogeneous	Solid	1	1	0	0
S001705	25	41	SP Retrieve and Vent BG Solids	TA-21 Homogeneous	Solid	1	1	0	0
S001721	25	41	SP Retrieve and Vent BG Solids	TA-21 Homogeneous	Solid	1	1	0	0
S001707	25	41	SP Retrieve and Vent BG Solids	TA-21 Homogeneous	Solid	1	1	0	0
S001744	25	41	SP Retrieve and Vent BG Solids	TA-21 Homogeneous	Solid	0	1	0	0
S001709	25	41	SP Retrieve and Vent BG Solids	TA-21 Homogeneous	Solid	1	1	0	0
S001710	25	41	SP Retrieve and Vent BG Solids	TA-21 Homogeneous	Solid	1	1	0	0
S001711	25	41	SP Retrieve and Vent BG Solids	TA-21 Homogeneous	Solid	1	1	0	0
S001712	25	41	SP Retrieve and Vent BG Solids	TA-21 Homogeneous	Solid	1	1	0	0
S001713	25	41	SP Retrieve and Vent BG Solids	TA-21 Homogeneous	Solid	0	1	0	0
S001714	25	41	SP Retrieve and Vent BG Solids	TA-21 Homogeneous	Solid	1	1	0	0
S001715	25	41	SP Retrieve and Vent BG Solids	TA-21 Homogeneous	Solid	1	1	0	0
S001716	25	41	SP Retrieve and Vent BG Solids	TA-21 Homogeneous	Solid	1	1	0	0
S001717	25	41	SP Retrieve and Vent BG Solids	TA-21 Homogeneous	Solid	1	1	0	0
S001718	25	41	SP Retrieve and Vent BG Solids	TA-21 Homogeneous	Solid	1	1	0	0
S001706	25	41	SP Retrieve and Vent BG Solids	TA-21 Homogeneous	Solid	1	1	0	0
S001779	25	41	SP Retrieve and Vent BG Solids	TA-21 Homogeneous	Solid	0	1	0	0
S001742	25	41	SP Retrieve and Vent BG Solids	TA-21 Homogeneous	Solid	1	1	0	0
S001769	25	41	SP Retrieve and Vent BG Solids	TA-21 Homogeneous	Solid	1	1	0	0
S001770	25	41	SP Retrieve and Vent BG Solids	TA-21 Homogeneous	Solid	0	1	0	0
S001771	25	41	SP Retrieve and Vent BG Solids	TA-21 Homogeneous	Solid	1	1	0	0
S001772	25	41	SP Retrieve and Vent BG Solids	TA-21 Homogeneous	Solid	1	1	0	0
S001773	25	41	SP Retrieve and Vent BG Solids	TA-21 Homogeneous	Solid	1	1	0	0
S001774	25	41	SP Retrieve and Vent BG Solids	TA-21 Homogeneous	Solid	1	1	0	0
S001775	25	41	SP Retrieve and Vent BG Solids	TA-21 Homogeneous	Solid	1	1	0	0
S001776	25	41	SP Retrieve and Vent BG Solids	TA-21 Homogeneous	Solid	1	1	0	0
S001767	25	41	SP Retrieve and Vent BG Solids	TA-21 Homogeneous	Solid	0	1	0	0
S001778	25	41	SP Retrieve and Vent BG Solids	TA-21 Homogeneous	Solid	0	1	0	0
S001766	25	41	SP Retrieve and Vent BG Solids	TA-21 Homogeneous	Solid	0	1	0	0
S001780	25	41	SP Retrieve and Vent BG Solids	TA-21 Homogeneous	Solid	1	1	0	0
S001781	25	41	SP Retrieve and Vent BG Solids	TA-21 Homogeneous	Solid	1	1	0	0
S001782	25	41	SP Retrieve and Vent BG Solids	TA-21 Homogeneous	Solid	0	1	0	0
S001783	25	41	SP Retrieve and Vent BG Solids	TA-21 Homogeneous	Solid	0	1	0	0
S001784	25	41	SP Retrieve and Vent BG Solids	TA-21 Homogeneous	Solid	0	1	0	0
S001785	25	41	SP Retrieve and Vent BG Solids	TA-21 Homogeneous	Solid	0	1	0	0
S001786	25	41	SP Retrieve and Vent BG Solids	TA-21 Homogeneous	Solid	0	1	0	0
S001787	25	41	SP Retrieve and Vent BG Solids	TA-21 Homogeneous	Solid	0	1	0	0
S001788	25	41	SP Retrieve and Vent BG Solids	TA-21 Homogeneous	Solid	0	1	0	0
S001789	25	41	SP Retrieve and Vent BG Solids	TA-21 Homogeneous	Solid	0	1	0	0
S001777	25	41	SP Retrieve and Vent BG Solids	TA-21 Homogeneous	Solid	1	1	0	0
S001756	25	41	SP Retrieve and Vent BG Solids	TA-21 Homogeneous	Solid	0	1	0	0
S001745	25	41	SP Retrieve and Vent BG Solids	TA-21 Homogeneous	Solid	0	1	0	0
S001746	25	41	SP Retrieve and Vent BG Solids	TA-21 Homogeneous	Solid	0	1	0	0
S001747	25	41	SP Retrieve and Vent BG Solids	TA-21 Homogeneous	Solid	1	1	0	0
S001748	25	41	SP Retrieve and Vent BG Solids	TA-21 Homogeneous	Solid	0	1	0	0
S001749	25	41	SP Retrieve and Vent BG Solids	TA-21 Homogeneous	Solid	0	1	0	0
S001750	25	41	SP Retrieve and Vent BG Solids	TA-21 Homogeneous	Solid	0	1	0	0
S001751	25	41	SP Retrieve and Vent BG Solids	TA-21 Homogeneous	Solid	0	1	0	0
S001752	25	41	SP Retrieve and Vent BG Solids	TA-21 Homogeneous	Solid	1	1	0	0

PKG_ID	WASTE_CD	Solution Package	Description	Waste Stream	Waste Type	Needs Remediation	Remediation Planned	Needs Characterization	CCP In Process
S001753	25	41	SP Retrieve and Vent BG Solids	TA-21 Homogeneous	Solid	0	1	0	0
S001768	25	41	SP Retrieve and Vent BG Solids	TA-21 Homogeneous	Solid	0	1	0	0
S001755	25	41	SP Retrieve and Vent BG Solids	TA-21 Homogeneous	Solid	1	1	0	0
S730352	25	41	SP Retrieve and Vent BG Solids	TA-21 Homogeneous	Solid	0	1	0	0
S001757	25	41	SP Retrieve and Vent BG Solids	TA-21 Homogeneous	Solid	0	1	0	0
S001695	25	41	SP Retrieve and Vent BG Solids	TA-21 Homogeneous	Solid	1	1	0	0
S001758	25	41	SP Retrieve and Vent BG Solids	TA-21 Homogeneous	Solid	0	1	0	0
S001759	25	41	SP Retrieve and Vent BG Solids	TA-21 Homogeneous	Solid	0	1	0	0
S001760	25	41	SP Retrieve and Vent BG Solids	TA-21 Homogeneous	Solid	1	1	0	0
S001761	25	41	SP Retrieve and Vent BG Solids	TA-21 Homogeneous	Solid	1	1	0	0
S001762	25	41	SP Retrieve and Vent BG Solids	TA-21 Homogeneous	Solid	1	1	0	0
S001763	25	41	SP Retrieve and Vent BG Solids	TA-21 Homogeneous	Solid	1	1	0	0
S001764	25	41	SP Retrieve and Vent BG Solids	TA-21 Homogeneous	Solid	1	1	0	0
S001765	25	41	SP Retrieve and Vent BG Solids	TA-21 Homogeneous	Solid	0	1	0	0
S001754	25	41	SP Retrieve and Vent BG Solids	TA-21 Homogeneous	Solid	0	1	0	0
S772680	25	41	SP Retrieve and Vent BG Solids	TA-21 Homogeneous	Solid	0	1	0	0
S731307	25	41	SP Retrieve and Vent BG Solids	TA-21 Homogeneous	Solid	1	1	0	0
S731308	25	41	SP Retrieve and Vent BG Solids	TA-21 Homogeneous	Solid	1	1	0	0
S773048	25	41	SP Retrieve and Vent BG Solids	TA-21 Homogeneous	Solid	0	1	0	0
S731309	25	41	SP Retrieve and Vent BG Solids	TA-21 Homogeneous	Solid	1	1	0	0
S731310	25	41	SP Retrieve and Vent BG Solids	TA-21 Homogeneous	Solid	1	1	0	0
S773017	25	41	SP Retrieve and Vent BG Solids	TA-21 Homogeneous	Solid	0	1	0	0
S731311	25	41	SP Retrieve and Vent BG Solids	TA-21 Homogeneous	Solid	1	1	0	0
S781543	25	41	SP Retrieve and Vent BG Solids	TA-21 Homogeneous	Solid	0	1	0	0
S772681	25	41	SP Retrieve and Vent BG Solids	TA-21 Homogeneous	Solid	0	1	0	0
S731302	25	41	SP Retrieve and Vent BG Solids	TA-21 Homogeneous	Solid	1	1	0	0
S731313	25	41	SP Retrieve and Vent BG Solids	TA-21 Homogeneous	Solid	1	1	0	0
S731314	25	41	SP Retrieve and Vent BG Solids	TA-21 Homogeneous	Solid	1	1	0	0
S731315	25	41	SP Retrieve and Vent BG Solids	TA-21 Homogeneous	Solid	1	1	0	0
S772630	25	41	SP Retrieve and Vent BG Solids	TA-21 Homogeneous	Solid	0	1	0	0
S731320	25	41	SP Retrieve and Vent BG Solids	TA-21 Homogeneous	Solid	1	1	0	0
S772605	25	41	SP Retrieve and Vent BG Solids	TA-21 Homogeneous	Solid	0	1	0	0
S772602	25	41	SP Retrieve and Vent BG Solids	TA-21 Homogeneous	Solid	0	1	0	0
S731312	25	41	SP Retrieve and Vent BG Solids	TA-21 Homogeneous	Solid	1	1	0	0
S731285	25	41	SP Retrieve and Vent BG Solids	TA-21 Homogeneous	Solid	1	1	0	0
S781542	25	41	SP Retrieve and Vent BG Solids	TA-21 Homogeneous	Solid	0	1	0	0
S731131	25	41	SP Retrieve and Vent BG Solids	TA-21 Homogeneous	Solid	1	1	0	0
S731137	25	41	SP Retrieve and Vent BG Solids	TA-21 Homogeneous	Solid	0	1	0	0
S731140	25	41	SP Retrieve and Vent BG Solids	TA-21 Homogeneous	Solid	1	1	0	0
S731322	25	41	SP Retrieve and Vent BG Solids	TA-21 Homogeneous	Solid	1	1	0	0
S731142	25	41	SP Retrieve and Vent BG Solids	TA-21 Homogeneous	Solid	1	1	0	0
S770692	25	41	SP Retrieve and Vent BG Solids	TA-21 Homogeneous	Solid	0	1	0	0
S731306	25	41	SP Retrieve and Vent BG Solids	TA-21 Homogeneous	Solid	1	1	0	0
S731280	25	41	SP Retrieve and Vent BG Solids	TA-21 Homogeneous	Solid	1	1	0	0
S731305	25	41	SP Retrieve and Vent BG Solids	TA-21 Homogeneous	Solid	0	1	0	0
S731286	25	41	SP Retrieve and Vent BG Solids	TA-21 Homogeneous	Solid	1	1	0	0
S731288	25	41	SP Retrieve and Vent BG Solids	TA-21 Homogeneous	Solid	1	1	0	0
S781524	25	41	SP Retrieve and Vent BG Solids	TA-21 Homogeneous	Solid	0	1	0	0
S731290	25	41	SP Retrieve and Vent BG Solids	TA-21 Homogeneous	Solid	1	1	0	0
S731291	25	41	SP Retrieve and Vent BG Solids	TA-21 Homogeneous	Solid	1	1	0	0
S731292	25	41	SP Retrieve and Vent BG Solids	TA-21 Homogeneous	Solid	1	1	0	0

PKG_ID	WASTE_CD	Solution Package	Description	Waste Stream	Waste Type	Needs Remediation	Remediation Planned	Needs Characterization	CCP In Process
S731301	25	41	SP Retrieve and Vent BG Solids	TA-21 Homogeneous	Solid	1	1	0	0
S731326	25	41	SP Retrieve and Vent BG Solids	TA-21 Homogeneous	Solid	1	1	0	0
S781527	25	41	SP Retrieve and Vent BG Solids	TA-21 Homogeneous	Solid	0	1	0	0
S770812	25	41	SP Retrieve and Vent BG Solids	TA-21 Homogeneous	Solid	0	1	0	0
S731324	25	41	SP Retrieve and Vent BG Solids	TA-21 Homogeneous	Solid	1	1	0	0
S760928	25	41	SP Retrieve and Vent BG Solids	TA-21 Homogeneous	Solid	0	1	0	0
S760945	25	41	SP Retrieve and Vent BG Solids	TA-21 Homogeneous	Solid	0	1	0	0
S761047	25	41	SP Retrieve and Vent BG Solids	TA-21 Homogeneous	Solid	0	1	0	0
S770833	25	41	SP Retrieve and Vent BG Solids	TA-21 Homogeneous	Solid	0	1	0	0
S761051	25	41	SP Retrieve and Vent BG Solids	TA-21 Homogeneous	Solid	0	1	0	0
S761085	25	41	SP Retrieve and Vent BG Solids	TA-21 Homogeneous	Solid	0	1	0	0
S760735	25	41	SP Retrieve and Vent BG Solids	TA-21 Homogeneous	Solid	0	1	0	0
S770333	25	41	SP Retrieve and Vent BG Solids	TA-21 Homogeneous	Solid	0	1	0	0
S760729	25	41	SP Retrieve and Vent BG Solids	TA-21 Homogeneous	Solid	0	1	0	0
S770478	25	41	SP Retrieve and Vent BG Solids	TA-21 Homogeneous	Solid	0	1	0	0
S770507	25	41	SP Retrieve and Vent BG Solids	TA-21 Homogeneous	Solid	0	1	0	0
S770543	25	41	SP Retrieve and Vent BG Solids	TA-21 Homogeneous	Solid	0	1	0	0
S770544	25	41	SP Retrieve and Vent BG Solids	TA-21 Homogeneous	Solid	0	1	0	0
S770623	25	41	SP Retrieve and Vent BG Solids	TA-21 Homogeneous	Solid	0	1	0	0
S770793	25	41	SP Retrieve and Vent BG Solids	TA-21 Homogeneous	Solid	0	1	0	0
S770792	25	41	SP Retrieve and Vent BG Solids	TA-21 Homogeneous	Solid	0	1	0	0
S770691	25	41	SP Retrieve and Vent BG Solids	TA-21 Homogeneous	Solid	0	1	0	0
S770297	25	41	SP Retrieve and Vent BG Solids	TA-21 Homogeneous	Solid	0	1	0	0
S731339	25	41	SP Retrieve and Vent BG Solids	TA-21 Homogeneous	Solid	1	1	0	0
S731141	25	41	SP Retrieve and Vent BG Solids	TA-21 Homogeneous	Solid	1	1	0	0
S770870	25	41	SP Retrieve and Vent BG Solids	TA-21 Homogeneous	Solid	0	1	0	0
S731327	25	41	SP Retrieve and Vent BG Solids	TA-21 Homogeneous	Solid	1	1	0	0
S731328	25	41	SP Retrieve and Vent BG Solids	TA-21 Homogeneous	Solid	1	1	0	0
S770837	25	41	SP Retrieve and Vent BG Solids	TA-21 Homogeneous	Solid	0	1	0	0
S731329	25	41	SP Retrieve and Vent BG Solids	TA-21 Homogeneous	Solid	1	1	0	0
S731330	25	41	SP Retrieve and Vent BG Solids	TA-21 Homogeneous	Solid	0	1	0	0
S760852	25	41	SP Retrieve and Vent BG Solids	TA-21 Homogeneous	Solid	0	1	0	0
S731338	25	41	SP Retrieve and Vent BG Solids	TA-21 Homogeneous	Solid	1	1	0	0
S731325	25	41	SP Retrieve and Vent BG Solids	TA-21 Homogeneous	Solid	1	1	0	0
S731340	25	41	SP Retrieve and Vent BG Solids	TA-21 Homogeneous	Solid	0	1	0	0
S731447	25	41	SP Retrieve and Vent BG Solids	TA-21 Homogeneous	Solid	1	1	0	0
S760010	25	41	SP Retrieve and Vent BG Solids	TA-21 Homogeneous	Solid	0	1	0	0
S760014	25	41	SP Retrieve and Vent BG Solids	TA-21 Homogeneous	Solid	0	1	0	0
S760015	25	41	SP Retrieve and Vent BG Solids	TA-21 Homogeneous	Solid	0	1	0	0
S760410	25	41	SP Retrieve and Vent BG Solids	TA-21 Homogeneous	Solid	0	1	0	0
S760411	25	41	SP Retrieve and Vent BG Solids	TA-21 Homogeneous	Solid	0	1	0	0
S760426	25	41	SP Retrieve and Vent BG Solids	TA-21 Homogeneous	Solid	0	1	0	0
S731331	25	41	SP Retrieve and Vent BG Solids	TA-21 Homogeneous	Solid	0	1	0	0
S731084	25	41	SP Retrieve and Vent BG Solids	TA-21 Homogeneous	Solid	1	1	0	0
S731095	25	41	SP Retrieve and Vent BG Solids	TA-21 Homogeneous	Solid	1	1	0	0
S731082	25	41	SP Retrieve and Vent BG Solids	TA-21 Homogeneous	Solid	1	1	0	0
S783568	25	41	SP Retrieve and Vent BG Solids	TA-21 Homogeneous	Solid	0	1	0	0
S781959	25	41	SP Retrieve and Vent BG Solids	TA-21 Homogeneous	Solid	0	1	0	0
S781891	25	41	SP Retrieve and Vent BG Solids	TA-21 Homogeneous	Solid	0	1	0	0
S781763	25	41	SP Retrieve and Vent BG Solids	TA-21 Homogeneous	Solid	0	1	0	0
S731083	25	41	SP Retrieve and Vent BG Solids	TA-21 Homogeneous	Solid	1	1	0	0

PKG_ID	WASTE_CD	Solution Package	Description	Waste Stream	Waste Type	Needs Remediation	Remediation Planned	Needs Characterization	CCP In Process
S730387	25	41	SP Retrieve and Vent BG Solids	TA-21 Homogeneous	Solid	1	1	0	0
S781679	25	41	SP Retrieve and Vent BG Solids	TA-21 Homogeneous	Solid	0	1	0	0
S783572	25	41	SP Retrieve and Vent BG Solids	TA-21 Homogeneous	Solid	0	1	0	0
S781678	25	41	SP Retrieve and Vent BG Solids	TA-21 Homogeneous	Solid	0	1	0	0
S731091	25	41	SP Retrieve and Vent BG Solids	TA-21 Homogeneous	Solid	1	1	0	0
S731092	25	41	SP Retrieve and Vent BG Solids	TA-21 Homogeneous	Solid	1	1	0	0
S781668	25	41	SP Retrieve and Vent BG Solids	TA-21 Homogeneous	Solid	0	1	0	0
S731093	25	41	SP Retrieve and Vent BG Solids	TA-21 Homogeneous	Solid	1	1	0	0
S731126	25	41	SP Retrieve and Vent BG Solids	TA-21 Homogeneous	Solid	1	1	0	0
S731094	25	41	SP Retrieve and Vent BG Solids	TA-21 Homogeneous	Solid	1	1	0	0
S781680	25	41	SP Retrieve and Vent BG Solids	TA-21 Homogeneous	Solid	0	1	0	0
S001691	25	41	SP Retrieve and Vent BG Solids	TA-21 Homogeneous	Solid	0	1	0	0
S001685	25	41	SP Retrieve and Vent BG Solids	TA-21 Homogeneous	Solid	1	1	0	0
S730373	25	41	SP Retrieve and Vent BG Solids	TA-21 Homogeneous	Solid	1	1	0	0
S001686	25	41	SP Retrieve and Vent BG Solids	TA-21 Homogeneous	Solid	1	1	0	0
S730375	25	41	SP Retrieve and Vent BG Solids	TA-21 Homogeneous	Solid	1	1	0	0
S730376	25	41	SP Retrieve and Vent BG Solids	TA-21 Homogeneous	Solid	1	1	0	0
S001687	25	41	SP Retrieve and Vent BG Solids	TA-21 Homogeneous	Solid	0	1	0	0
S001688	25	41	SP Retrieve and Vent BG Solids	TA-21 Homogeneous	Solid	1	1	0	0
S731081	25	41	SP Retrieve and Vent BG Solids	TA-21 Homogeneous	Solid	1	1	0	0
S001690	25	41	SP Retrieve and Vent BG Solids	TA-21 Homogeneous	Solid	1	1	0	0
S781667	25	41	SP Retrieve and Vent BG Solids	TA-21 Homogeneous	Solid	0	1	0	0
S001692	25	41	SP Retrieve and Vent BG Solids	TA-21 Homogeneous	Solid	0	1	0	0
S001693	25	41	SP Retrieve and Vent BG Solids	TA-21 Homogeneous	Solid	1	1	0	0
S730380	25	41	SP Retrieve and Vent BG Solids	TA-21 Homogeneous	Solid	1	1	0	0
S730382	25	41	SP Retrieve and Vent BG Solids	TA-21 Homogeneous	Solid	1	1	0	0
S730385	25	41	SP Retrieve and Vent BG Solids	TA-21 Homogeneous	Solid	1	1	0	0
S001694	25	41	SP Retrieve and Vent BG Solids	TA-21 Homogeneous	Solid	1	1	0	0
S730386	25	41	SP Retrieve and Vent BG Solids	TA-21 Homogeneous	Solid	1	1	0	0
S001689	25	41	SP Retrieve and Vent BG Solids	TA-21 Homogeneous	Solid	1	1	0	0
S731114	25	41	SP Retrieve and Vent BG Solids	TA-21 Homogeneous	Solid	1	1	0	0
S731106	25	41	SP Retrieve and Vent BG Solids	TA-21 Homogeneous	Solid	1	1	0	0
S731108	25	41	SP Retrieve and Vent BG Solids	TA-21 Homogeneous	Solid	1	1	0	0
S781625	25	41	SP Retrieve and Vent BG Solids	TA-21 Homogeneous	Solid	0	1	0	0
S781621	25	41	SP Retrieve and Vent BG Solids	TA-21 Homogeneous	Solid	0	1	0	0
S781562	25	41	SP Retrieve and Vent BG Solids	TA-21 Homogeneous	Solid	0	1	0	0
S731109	25	41	SP Retrieve and Vent BG Solids	TA-21 Homogeneous	Solid	0	1	0	0
S731110	25	41	SP Retrieve and Vent BG Solids	TA-21 Homogeneous	Solid	1	1	0	0
S731111	25	41	SP Retrieve and Vent BG Solids	TA-21 Homogeneous	Solid	1	1	0	0
S781629	25	41	SP Retrieve and Vent BG Solids	TA-21 Homogeneous	Solid	0	1	0	0
S731113	25	41	SP Retrieve and Vent BG Solids	TA-21 Homogeneous	Solid	1	1	0	0
S731107	25	41	SP Retrieve and Vent BG Solids	TA-21 Homogeneous	Solid	1	1	0	0
S731115	25	41	SP Retrieve and Vent BG Solids	TA-21 Homogeneous	Solid	1	1	0	0
S781561	25	41	SP Retrieve and Vent BG Solids	TA-21 Homogeneous	Solid	0	1	0	0
S731116	25	41	SP Retrieve and Vent BG Solids	TA-21 Homogeneous	Solid	1	1	0	0
S731117	25	41	SP Retrieve and Vent BG Solids	TA-21 Homogeneous	Solid	1	1	0	0
S731118	25	41	SP Retrieve and Vent BG Solids	TA-21 Homogeneous	Solid	1	1	0	0
S781560	25	41	SP Retrieve and Vent BG Solids	TA-21 Homogeneous	Solid	0	1	0	0
S731119	25	41	SP Retrieve and Vent BG Solids	TA-21 Homogeneous	Solid	1	1	0	0
S731125	25	41	SP Retrieve and Vent BG Solids	TA-21 Homogeneous	Solid	1	1	0	0
S731112	25	41	SP Retrieve and Vent BG Solids	TA-21 Homogeneous	Solid	1	1	0	0

PKG_ID	WASTE_CD	Solution Package	Description	Waste Stream	Waste Type	Needs Remediation	Remediation Planned	Needs Characterization	CCP In Process
S731104	25	41	SP Retrieve and Vent BG Solids	TA-21 Homogeneous	Solid	1	1	0	0
S731102	25	41	SP Retrieve and Vent BG Solids	TA-21 Homogeneous	Solid	1	1	0	0
S731105	25	41	SP Retrieve and Vent BG Solids	TA-21 Homogeneous	Solid	1	1	0	0
S781630	25	41	SP Retrieve and Vent BG Solids	TA-21 Homogeneous	Solid	0	1	0	0
S731103	25	41	SP Retrieve and Vent BG Solids	TA-21 Homogeneous	Solid	1	1	0	0
S781631	25	41	SP Retrieve and Vent BG Solids	TA-21 Homogeneous	Solid	0	1	0	0
S731100	25	41	SP Retrieve and Vent BG Solids	TA-21 Homogeneous	Solid	0	1	0	0
S731099	25	41	SP Retrieve and Vent BG Solids	TA-21 Homogeneous	Solid	1	1	0	0
S772629	25	56	SP AG Solids No Issues (Solids)	TA-21 Homogeneous	Solid	0	1	0	0
S813591	25	57	SP AG Cement Cans No Issues	LA-CIN01.001-Cans	Solid	0	0	1	0
S813525	25	57	SP AG Cement Cans No Issues	LA-CIN01.001-Cans	Solid	0	0	1	0
S816304	25	57	SP AG Cement Cans No Issues	LA-CIN01.001-Cans	Solid	0	0	1	0
S815301	25	57	SP AG Cement Cans No Issues	LA-CIN01.001-Cans	Solid	0	0	1	0
S842087	25	57	SP AG Cement Cans No Issues	LA-CIN01.001-Cans	Solid	0	0	1	0
S815304	25	57	SP AG Cement Cans No Issues	LA-CIN01.001-Cans	Solid	0	0	1	0
S834523	25	57	SP AG Cement Cans No Issues	LA-CIN01.001-Cans	Solid	0	0	1	0
S842083	25	57	SP AG Cement Cans No Issues	LA-CIN01.001-Cans	Solid	0	0	1	0
S813467	25	57	SP AG Cement Cans No Issues	LA-CIN01.001-Cans	Solid	0	0	1	0
S842085	25	57	SP AG Cement Cans No Issues	LA-CIN01.001-Cans	Solid	0	0	1	0
S813536	25	57	SP AG Cement Cans No Issues	LA-CIN01.001-Cans	Solid	0	0	1	0
S813592	25	57	SP AG Cement Cans No Issues	LA-CIN01.001-Cans	Solid	0	0	1	0
S842086	25	57	SP AG Cement Cans No Issues	LA-CIN01.001-Cans	Solid	0	0	1	0
S813549	25	57	SP AG Cement Cans No Issues	LA-CIN01.001-Cans	Solid	0	0	1	0
S813469	25	57	SP AG Cement Cans No Issues	LA-CIN01.001-Cans	Solid	0	0	1	0
S813539	25	57	SP AG Cement Cans No Issues	LA-CIN01.001-Cans	Solid	0	0	1	0
S834571	25	57	SP AG Cement Cans No Issues	LA-CIN01.001-Cans	Solid	0	0	1	0
S813459	25	57	SP AG Cement Cans No Issues	LA-CIN01.001-Cans	Solid	0	0	1	0
S815176	25	57	SP AG Cement Cans No Issues	LA-CIN01.001-Cans	Solid	0	0	1	0
S815174	25	57	SP AG Cement Cans No Issues	LA-CIN01.001-Cans	Solid	0	0	1	0
S815162	25	57	SP AG Cement Cans No Issues	LA-CIN01.001-Cans	Solid	0	0	1	0
S815172	25	57	SP AG Cement Cans No Issues	LA-CIN01.001-Cans	Solid	0	0	1	0
S813562	25	57	SP AG Cement Cans No Issues	LA-CIN01.001-Cans	Solid	0	0	1	0
S841245	25	57	SP AG Cement Cans No Issues	LA-CIN01.001-Cans	Solid	0	0	1	0
S835326	25	57	SP AG Cement Cans No Issues	LA-CIN01.001-Cans	Solid	0	0	1	0
S835295	25	57	SP AG Cement Cans No Issues	LA-CIN01.001-Cans	Solid	0	0	1	0
S814854	25	57	SP AG Cement Cans No Issues	LA-CIN01.001-Cans	Solid	0	0	1	0
S814859	25	57	SP AG Cement Cans No Issues	LA-CIN01.001-Cans	Solid	0	0	1	0
S814853	25	57	SP AG Cement Cans No Issues	LA-CIN01.001-Cans	Solid	0	0	1	0
S841242	25	57	SP AG Cement Cans No Issues	LA-CIN01.001-Cans	Solid	0	0	1	0
S834653	25	57	SP AG Cement Cans No Issues	LA-CIN01.001-Cans	Solid	0	0	1	0
S814865	25	57	SP AG Cement Cans No Issues	LA-CIN01.001-Cans	Solid	0	0	1	0
S835359	25	57	SP AG Cement Cans No Issues	LA-CIN01.001-Cans	Solid	0	0	1	0
S842308	25	57	SP AG Cement Cans No Issues	LA-CIN01.001-Cans	Solid	0	0	1	0
S841249	25	57	SP AG Cement Cans No Issues	LA-CIN01.001-Cans	Solid	0	0	1	0
S813693	25	57	SP AG Cement Cans No Issues	LA-CIN01.001-Cans	Solid	0	0	1	0
S813687	25	57	SP AG Cement Cans No Issues	LA-CIN01.001-Cans	Solid	0	0	1	0
S813685	25	57	SP AG Cement Cans No Issues	LA-CIN01.001-Cans	Solid	0	0	1	0
S813676	25	57	SP AG Cement Cans No Issues	LA-CIN01.001-Cans	Solid	0	0	1	0
S841243	25	57	SP AG Cement Cans No Issues	LA-CIN01.001-Cans	Solid	0	0	1	0
S835373	25	57	SP AG Cement Cans No Issues	LA-CIN01.001-Cans	Solid	0	0	1	0
S835417	25	57	SP AG Cement Cans No Issues	LA-CIN01.001-Cans	Solid	0	0	1	0

PKG_ID	WASTE_CD	Solution Package	Description	Waste Stream	Waste Type	Needs Remediation	Remediation Planned	Needs Characterization	CCP In Process
S835398	25	57	SP AG Cement Cans No Issues	LA-CIN01.001-Cans	Solid	0	0	1	0
S814856	25	57	SP AG Cement Cans No Issues	LA-CIN01.001-Cans	Solid	0	0	1	0
S814855	25	57	SP AG Cement Cans No Issues	LA-CIN01.001-Cans	Solid	0	0	1	0
S835425	25	57	SP AG Cement Cans No Issues	LA-CIN01.001-Cans	Solid	0	0	1	0
S835429	25	57	SP AG Cement Cans No Issues	LA-CIN01.001-Cans	Solid	0	0	1	0
S835357	25	57	SP AG Cement Cans No Issues	LA-CIN01.001-Cans	Solid	0	0	1	0
S835376	25	57	SP AG Cement Cans No Issues	LA-CIN01.001-Cans	Solid	0	0	1	0
S835358	25	57	SP AG Cement Cans No Issues	LA-CIN01.001-Cans	Solid	0	0	1	0
S835372	25	57	SP AG Cement Cans No Issues	LA-CIN01.001-Cans	Solid	0	0	1	0
S835430	25	57	SP AG Cement Cans No Issues	LA-CIN01.001-Cans	Solid	0	0	1	0
S835366	25	57	SP AG Cement Cans No Issues	LA-CIN01.001-Cans	Solid	0	0	1	0
S835364	25	57	SP AG Cement Cans No Issues	LA-CIN01.001-Cans	Solid	0	0	1	0
S835361	25	57	SP AG Cement Cans No Issues	LA-CIN01.001-Cans	Solid	0	0	1	0
S842088	25	57	SP AG Cement Cans No Issues	LA-CIN01.001-Cans	Solid	0	0	1	0
S835281	25	57	SP AG Cement Cans No Issues	LA-CIN01.001-Cans	Solid	0	0	1	0
S814857	25	57	SP AG Cement Cans No Issues	LA-CIN01.001-Cans	Solid	0	0	1	0
S813620	25	57	SP AG Cement Cans No Issues	LA-CIN01.001-Cans	Solid	0	0	1	0
S813670	25	57	SP AG Cement Cans No Issues	LA-CIN01.001-Cans	Solid	0	0	1	0
S813475	25	57	SP AG Cement Cans No Issues	LA-CIN01.001-Cans	Solid	0	0	1	0
S835360	25	57	SP AG Cement Cans No Issues	LA-CIN01.001-Cans	Solid	0	0	1	0
S834651	25	57	SP AG Cement Cans No Issues	LA-CIN01.001-Cans	Solid	0	0	1	0
S841309	25	57	SP AG Cement Cans No Issues	LA-CIN01.001-Cans	Solid	0	0	1	0
S841313	25	57	SP AG Cement Cans No Issues	LA-CIN01.001-Cans	Solid	0	0	1	0
S841307	25	57	SP AG Cement Cans No Issues	LA-CIN01.001-Cans	Solid	0	0	1	0
S815105	25	57	SP AG Cement Cans No Issues	LA-CIN01.001-Cans	Solid	0	0	1	0
S815025	25	57	SP AG Cement Cans No Issues	LA-CIN01.001-Cans	Solid	0	0	1	0
S813617	25	57	SP AG Cement Cans No Issues	LA-CIN01.001-Cans	Solid	0	0	1	0
S834604	25	57	SP AG Cement Cans No Issues	LA-CIN01.001-Cans	Solid	0	0	1	0
S813616	25	57	SP AG Cement Cans No Issues	LA-CIN01.001-Cans	Solid	0	0	1	0
S813470	25	57	SP AG Cement Cans No Issues	LA-CIN01.001-Cans	Solid	0	0	1	0
S815125	25	57	SP AG Cement Cans No Issues	LA-CIN01.001-Cans	Solid	0	0	1	0
S813512	25	57	SP AG Cement Cans No Issues	LA-CIN01.001-Cans	Solid	0	0	1	0
S815139	25	57	SP AG Cement Cans No Issues	LA-CIN01.001-Cans	Solid	0	0	1	0
S813632	25	57	SP AG Cement Cans No Issues	LA-CIN01.001-Cans	Solid	0	0	1	0
S813655	25	57	SP AG Cement Cans No Issues	LA-CIN01.001-Cans	Solid	0	0	1	0
S813601	25	57	SP AG Cement Cans No Issues	LA-CIN01.001-Cans	Solid	0	0	1	0
S813657	25	57	SP AG Cement Cans No Issues	LA-CIN01.001-Cans	Solid	0	0	1	0
S813656	25	57	SP AG Cement Cans No Issues	LA-CIN01.001-Cans	Solid	0	0	1	0
S814891	25	57	SP AG Cement Cans No Issues	LA-CIN01.001-Cans	Solid	0	0	1	0
S814899	25	57	SP AG Cement Cans No Issues	LA-CIN01.001-Cans	Solid	0	0	1	0
S814927	25	57	SP AG Cement Cans No Issues	LA-CIN01.001-Cans	Solid	0	0	1	0
S835418	25	57	SP AG Cement Cans No Issues	LA-CIN01.001-Cans	Solid	0	0	1	0
S813472	25	57	SP AG Cement Cans No Issues	LA-CIN01.001-Cans	Solid	0	0	1	0
S813667	25	57	SP AG Cement Cans No Issues	LA-CIN01.001-Cans	Solid	0	0	1	0
S813652	25	57	SP AG Cement Cans No Issues	LA-CIN01.001-Cans	Solid	0	0	1	0
S834721	25	57	SP AG Cement Cans No Issues	LA-CIN01.001-Cans	Solid	0	0	1	0
S834720	25	57	SP AG Cement Cans No Issues	LA-CIN01.001-Cans	Solid	0	0	1	0
S814961	25	57	SP AG Cement Cans No Issues	LA-CIN01.001-Cans	Solid	0	0	1	0
S834669	25	57	SP AG Cement Cans No Issues	LA-CIN01.001-Cans	Solid	0	0	1	0
S815024	25	57	SP AG Cement Cans No Issues	LA-CIN01.001-Cans	Solid	0	0	1	0
S841306	25	57	SP AG Cement Cans No Issues	LA-CIN01.001-Cans	Solid	0	0	1	0

PKG_ID	WASTE_CD	Solution Package	Description	Waste Stream	Waste Type	Needs Remediation	Remediation Planned	Needs Characterization	CCP In Process
S834735	25	57	SP AG Cement Cans No Issues	LA-CIN01.001-Cans	Solid	0	0	1	0
S825849	25	57	SP AG Cement Cans No Issues	LA-CIN01.001-Cans	Solid	0	0	1	0
S818379	25	57	SP AG Cement Cans No Issues	LA-CIN01.001-Cans	Solid	0	0	1	0
S832152	25	57	SP AG Cement Cans No Issues	LA-CIN01.001-Cans	Solid	0	0	1	0
S818382	25	57	SP AG Cement Cans No Issues	LA-CIN01.001-Cans	Solid	0	0	1	0
S818397	25	57	SP AG Cement Cans No Issues	LA-CIN01.001-Cans	Solid	0	0	1	0
S818399	25	57	SP AG Cement Cans No Issues	LA-CIN01.001-Cans	Solid	0	0	1	0
S818400	25	57	SP AG Cement Cans No Issues	LA-CIN01.001-Cans	Solid	0	0	1	0
S818401	25	57	SP AG Cement Cans No Issues	LA-CIN01.001-Cans	Solid	0	0	1	0
S818411	25	57	SP AG Cement Cans No Issues	LA-CIN01.001-Cans	Solid	0	0	1	0
S818431	25	57	SP AG Cement Cans No Issues	LA-CIN01.001-Cans	Solid	0	0	1	0
S832137	25	57	SP AG Cement Cans No Issues	LA-CIN01.001-Cans	Solid	0	0	1	0
S818432	25	57	SP AG Cement Cans No Issues	LA-CIN01.001-Cans	Solid	0	0	1	0
S824990	25	57	SP AG Cement Cans No Issues	LA-CIN01.001-Cans	Solid	0	0	1	0
S825850	25	57	SP AG Cement Cans No Issues	LA-CIN01.001-Cans	Solid	0	0	1	0
S818354	25	57	SP AG Cement Cans No Issues	LA-CIN01.001-Cans	Solid	0	0	1	0
S822571	25	57	SP AG Cement Cans No Issues	LA-CIN01.001-Cans	Solid	0	0	1	0
S822572	25	57	SP AG Cement Cans No Issues	LA-CIN01.001-Cans	Solid	0	0	1	0
S825771	25	57	SP AG Cement Cans No Issues	LA-CIN01.001-Cans	Solid	0	0	1	0
S825770	25	57	SP AG Cement Cans No Issues	LA-CIN01.001-Cans	Solid	0	0	1	0
S825769	25	57	SP AG Cement Cans No Issues	LA-CIN01.001-Cans	Solid	0	0	1	0
S825732	25	57	SP AG Cement Cans No Issues	LA-CIN01.001-Cans	Solid	0	0	1	0
S825702	25	57	SP AG Cement Cans No Issues	LA-CIN01.001-Cans	Solid	0	0	1	0
S825701	25	57	SP AG Cement Cans No Issues	LA-CIN01.001-Cans	Solid	0	0	1	0
S825026	25	57	SP AG Cement Cans No Issues	LA-CIN01.001-Cans	Solid	0	0	1	0
S822627	25	57	SP AG Cement Cans No Issues	LA-CIN01.001-Cans	Solid	0	0	1	0
S816933	25	57	SP AG Cement Cans No Issues	LA-CIN01.001-Cans	Solid	0	0	1	0
S825891	25	57	SP AG Cement Cans No Issues	LA-CIN01.001-Cans	Solid	0	0	1	0
S818299	25	57	SP AG Cement Cans No Issues	LA-CIN01.001-Cans	Solid	0	0	1	0
S822578	25	57	SP AG Cement Cans No Issues	LA-CIN01.001-Cans	Solid	0	0	1	0
S832465	25	57	SP AG Cement Cans No Issues	LA-CIN01.001-Cans	Solid	0	0	1	0
S816950	25	57	SP AG Cement Cans No Issues	LA-CIN01.001-Cans	Solid	0	0	1	0
S816951	25	57	SP AG Cement Cans No Issues	LA-CIN01.001-Cans	Solid	0	0	1	0
S817484	25	57	SP AG Cement Cans No Issues	LA-CIN01.001-Cans	Solid	0	0	1	0
S832435	25	57	SP AG Cement Cans No Issues	LA-CIN01.001-Cans	Solid	0	0	1	0
S817522	25	57	SP AG Cement Cans No Issues	LA-CIN01.001-Cans	Solid	0	0	1	0
S818255	25	57	SP AG Cement Cans No Issues	LA-CIN01.001-Cans	Solid	0	0	1	0
S818260	25	57	SP AG Cement Cans No Issues	LA-CIN01.001-Cans	Solid	0	0	1	0
S818272	25	57	SP AG Cement Cans No Issues	LA-CIN01.001-Cans	Solid	0	0	1	0
S832388	25	57	SP AG Cement Cans No Issues	LA-CIN01.001-Cans	Solid	0	0	1	0
S818370	25	57	SP AG Cement Cans No Issues	LA-CIN01.001-Cans	Solid	0	0	1	0
S818290	25	57	SP AG Cement Cans No Issues	LA-CIN01.001-Cans	Solid	0	0	1	0
S818357	25	57	SP AG Cement Cans No Issues	LA-CIN01.001-Cans	Solid	0	0	1	0
S818300	25	57	SP AG Cement Cans No Issues	LA-CIN01.001-Cans	Solid	0	0	1	0
S818301	25	57	SP AG Cement Cans No Issues	LA-CIN01.001-Cans	Solid	0	0	1	0
S818302	25	57	SP AG Cement Cans No Issues	LA-CIN01.001-Cans	Solid	0	0	1	0
S818304	25	57	SP AG Cement Cans No Issues	LA-CIN01.001-Cans	Solid	0	0	1	0
S818311	25	57	SP AG Cement Cans No Issues	LA-CIN01.001-Cans	Solid	0	0	1	0
S818314	25	57	SP AG Cement Cans No Issues	LA-CIN01.001-Cans	Solid	0	0	1	0
S818317	25	57	SP AG Cement Cans No Issues	LA-CIN01.001-Cans	Solid	0	0	1	0
S818325	25	57	SP AG Cement Cans No Issues	LA-CIN01.001-Cans	Solid	0	0	1	0

PKG_ID	WASTE_CD	Solution Package	Description	Waste Stream	Waste Type	Needs Remediation	Remediation Planned	Needs Characterization	CCP In Process
S832239	25	57	SP AG Cement Cans No Issues	LA-CIN01.001-Cans	Solid	0	0	1	0
S818345	25	57	SP AG Cement Cans No Issues	LA-CIN01.001-Cans	Solid	0	0	1	0
S818346	25	57	SP AG Cement Cans No Issues	LA-CIN01.001-Cans	Solid	0	0	1	0
S822635	25	57	SP AG Cement Cans No Issues	LA-CIN01.001-Cans	Solid	0	0	1	0
S832349	25	57	SP AG Cement Cans No Issues	LA-CIN01.001-Cans	Solid	0	0	1	0
S822927	25	57	SP AG Cement Cans No Issues	LA-CIN01.001-Cans	Solid	0	0	1	0
S823305	25	57	SP AG Cement Cans No Issues	LA-CIN01.001-Cans	Solid	0	0	1	0
S822857	25	57	SP AG Cement Cans No Issues	LA-CIN01.001-Cans	Solid	0	0	1	0
S822862	25	57	SP AG Cement Cans No Issues	LA-CIN01.001-Cans	Solid	0	0	1	0
S822863	25	57	SP AG Cement Cans No Issues	LA-CIN01.001-Cans	Solid	0	0	1	0
S822874	25	57	SP AG Cement Cans No Issues	LA-CIN01.001-Cans	Solid	0	0	1	0
S823234	25	57	SP AG Cement Cans No Issues	LA-CIN01.001-Cans	Solid	0	0	1	0
S822883	25	57	SP AG Cement Cans No Issues	LA-CIN01.001-Cans	Solid	0	0	1	0
S822902	25	57	SP AG Cement Cans No Issues	LA-CIN01.001-Cans	Solid	0	0	1	0
S823215	25	57	SP AG Cement Cans No Issues	LA-CIN01.001-Cans	Solid	0	0	1	0
S823186	25	57	SP AG Cement Cans No Issues	LA-CIN01.001-Cans	Solid	0	0	1	0
S823178	25	57	SP AG Cement Cans No Issues	LA-CIN01.001-Cans	Solid	0	0	1	0
S822632	25	57	SP AG Cement Cans No Issues	LA-CIN01.001-Cans	Solid	0	0	1	0
S823165	25	57	SP AG Cement Cans No Issues	LA-CIN01.001-Cans	Solid	0	0	1	0
S824127	25	57	SP AG Cement Cans No Issues	LA-CIN01.001-Cans	Solid	0	0	1	0
S823150	25	57	SP AG Cement Cans No Issues	LA-CIN01.001-Cans	Solid	0	0	1	0
S823149	25	57	SP AG Cement Cans No Issues	LA-CIN01.001-Cans	Solid	0	0	1	0
S823144	25	57	SP AG Cement Cans No Issues	LA-CIN01.001-Cans	Solid	0	0	1	0
S822940	25	57	SP AG Cement Cans No Issues	LA-CIN01.001-Cans	Solid	0	0	1	0
S822945	25	57	SP AG Cement Cans No Issues	LA-CIN01.001-Cans	Solid	0	0	1	0
S823114	25	57	SP AG Cement Cans No Issues	LA-CIN01.001-Cans	Solid	0	0	1	0
S823078	25	57	SP AG Cement Cans No Issues	LA-CIN01.001-Cans	Solid	0	0	1	0
S822949	25	57	SP AG Cement Cans No Issues	LA-CIN01.001-Cans	Solid	0	0	1	0
S822950	25	57	SP AG Cement Cans No Issues	LA-CIN01.001-Cans	Solid	0	0	1	0
S822989	25	57	SP AG Cement Cans No Issues	LA-CIN01.001-Cans	Solid	0	0	1	0
S823002	25	57	SP AG Cement Cans No Issues	LA-CIN01.001-Cans	Solid	0	0	1	0
S822915	25	57	SP AG Cement Cans No Issues	LA-CIN01.001-Cans	Solid	0	0	1	0
S824610	25	57	SP AG Cement Cans No Issues	LA-CIN01.001-Cans	Solid	0	0	1	0
S824954	25	57	SP AG Cement Cans No Issues	LA-CIN01.001-Cans	Solid	0	0	1	0
S823023	25	57	SP AG Cement Cans No Issues	LA-CIN01.001-Cans	Solid	0	0	1	0
S813458	25	57	SP AG Cement Cans No Issues	LA-CIN01.001-Cans	Solid	0	0	1	0
S802928	25	57	SP AG Cement Cans No Issues	LA-CIN01.001-Cans	Solid	0	0	1	0
S822639	25	57	SP AG Cement Cans No Issues	LA-CIN01.001-Cans	Solid	0	0	1	0
S824946	25	57	SP AG Cement Cans No Issues	LA-CIN01.001-Cans	Solid	0	0	1	0
S824688	25	57	SP AG Cement Cans No Issues	LA-CIN01.001-Cans	Solid	0	0	1	0
S824687	25	57	SP AG Cement Cans No Issues	LA-CIN01.001-Cans	Solid	0	0	1	0
S824667	25	57	SP AG Cement Cans No Issues	LA-CIN01.001-Cans	Solid	0	0	1	0
S824666	25	57	SP AG Cement Cans No Issues	LA-CIN01.001-Cans	Solid	0	0	1	0
S822683	25	57	SP AG Cement Cans No Issues	LA-CIN01.001-Cans	Solid	0	0	1	0
S824098	25	57	SP AG Cement Cans No Issues	LA-CIN01.001-Cans	Solid	0	0	1	0
S824614	25	57	SP AG Cement Cans No Issues	LA-CIN01.001-Cans	Solid	0	0	1	0
S822849	25	57	SP AG Cement Cans No Issues	LA-CIN01.001-Cans	Solid	0	0	1	0
S824607	25	57	SP AG Cement Cans No Issues	LA-CIN01.001-Cans	Solid	0	0	1	0
S824548	25	57	SP AG Cement Cans No Issues	LA-CIN01.001-Cans	Solid	0	0	1	0
S824465	25	57	SP AG Cement Cans No Issues	LA-CIN01.001-Cans	Solid	0	0	1	0
S824461	25	57	SP AG Cement Cans No Issues	LA-CIN01.001-Cans	Solid	0	0	1	0

PKG_ID	WASTE_CD	Solution Package	Description	Waste Stream	Waste Type	Needs Remediation	Remediation Planned	Needs Characterization	CCP In Process
S824459	25	57	SP AG Cement Cans No Issues	LA-CIN01.001-Cans	Solid	0	0	1	0
S822785	25	57	SP AG Cement Cans No Issues	LA-CIN01.001-Cans	Solid	0	0	1	0
S822812	25	57	SP AG Cement Cans No Issues	LA-CIN01.001-Cans	Solid	0	0	1	0
S822828	25	57	SP AG Cement Cans No Issues	LA-CIN01.001-Cans	Solid	0	0	1	0
S822848	25	57	SP AG Cement Cans No Issues	LA-CIN01.001-Cans	Solid	0	0	1	0
S823057	25	57	SP AG Cement Cans No Issues	LA-CIN01.001-Cans	Solid	0	0	1	0
S824153	25	57	SP AG Cement Cans No Issues	LA-CIN01.001-Cans	Solid	0	0	1	0
S816928	25	57	SP AG Cement Cans No Issues	LA-CIN01.001-Cans	Solid	0	0	1	0
S822699	25	57	SP AG Cement Cans No Issues	LA-CIN01.001-Cans	Solid	0	0	1	0
S816745	25	57	SP AG Cement Cans No Issues	LA-CIN01.001-Cans	Solid	0	0	1	0
S816664	25	57	SP AG Cement Cans No Issues	LA-CIN01.001-Cans	Solid	0	0	1	0
S816665	25	57	SP AG Cement Cans No Issues	LA-CIN01.001-Cans	Solid	0	0	1	0
S816667	25	57	SP AG Cement Cans No Issues	LA-CIN01.001-Cans	Solid	0	0	1	0
S816673	25	57	SP AG Cement Cans No Issues	LA-CIN01.001-Cans	Solid	0	0	1	0
S816687	25	57	SP AG Cement Cans No Issues	LA-CIN01.001-Cans	Solid	0	0	1	0
S816692	25	57	SP AG Cement Cans No Issues	LA-CIN01.001-Cans	Solid	0	0	1	0
S816697	25	57	SP AG Cement Cans No Issues	LA-CIN01.001-Cans	Solid	0	0	1	0
S816700	25	57	SP AG Cement Cans No Issues	LA-CIN01.001-Cans	Solid	0	0	1	0
S816701	25	57	SP AG Cement Cans No Issues	LA-CIN01.001-Cans	Solid	0	0	1	0
S816717	25	57	SP AG Cement Cans No Issues	LA-CIN01.001-Cans	Solid	0	0	1	0
S816723	25	57	SP AG Cement Cans No Issues	LA-CIN01.001-Cans	Solid	0	0	1	0
S816812	25	57	SP AG Cement Cans No Issues	LA-CIN01.001-Cans	Solid	0	0	1	0
S816744	25	57	SP AG Cement Cans No Issues	LA-CIN01.001-Cans	Solid	0	0	1	0
S816469	25	57	SP AG Cement Cans No Issues	LA-CIN01.001-Cans	Solid	0	0	1	0
S816751	25	57	SP AG Cement Cans No Issues	LA-CIN01.001-Cans	Solid	0	0	1	0
S816752	25	57	SP AG Cement Cans No Issues	LA-CIN01.001-Cans	Solid	0	0	1	0
S816755	25	57	SP AG Cement Cans No Issues	LA-CIN01.001-Cans	Solid	0	0	1	0
S816760	25	57	SP AG Cement Cans No Issues	LA-CIN01.001-Cans	Solid	0	0	1	0
S816766	25	57	SP AG Cement Cans No Issues	LA-CIN01.001-Cans	Solid	0	0	1	0
S816773	25	57	SP AG Cement Cans No Issues	LA-CIN01.001-Cans	Solid	0	0	1	0
S816794	25	57	SP AG Cement Cans No Issues	LA-CIN01.001-Cans	Solid	0	0	1	0
S816802	25	57	SP AG Cement Cans No Issues	LA-CIN01.001-Cans	Solid	0	0	1	0
S816809	25	57	SP AG Cement Cans No Issues	LA-CIN01.001-Cans	Solid	0	0	1	0
S833483	25	57	SP AG Cement Cans No Issues	LA-CIN01.001-Cans	Solid	0	0	1	0
S816944	25	57	SP AG Cement Cans No Issues	LA-CIN01.001-Cans	Solid	0	0	1	0
S816741	25	57	SP AG Cement Cans No Issues	LA-CIN01.001-Cans	Solid	0	0	1	0
S816415	25	57	SP AG Cement Cans No Issues	LA-CIN01.001-Cans	Solid	0	0	1	0
S834480	25	57	SP AG Cement Cans No Issues	LA-CIN01.001-Cans	Solid	0	0	1	0
S816308	25	57	SP AG Cement Cans No Issues	LA-CIN01.001-Cans	Solid	0	0	1	0
S816334	25	57	SP AG Cement Cans No Issues	LA-CIN01.001-Cans	Solid	0	0	1	0
S834464	25	57	SP AG Cement Cans No Issues	LA-CIN01.001-Cans	Solid	0	0	1	0
S816342	25	57	SP AG Cement Cans No Issues	LA-CIN01.001-Cans	Solid	0	0	1	0
S816357	25	57	SP AG Cement Cans No Issues	LA-CIN01.001-Cans	Solid	0	0	1	0
S816363	25	57	SP AG Cement Cans No Issues	LA-CIN01.001-Cans	Solid	0	0	1	0
S816374	25	57	SP AG Cement Cans No Issues	LA-CIN01.001-Cans	Solid	0	0	1	0
S816385	25	57	SP AG Cement Cans No Issues	LA-CIN01.001-Cans	Solid	0	0	1	0
S816388	25	57	SP AG Cement Cans No Issues	LA-CIN01.001-Cans	Solid	0	0	1	0
S816394	25	57	SP AG Cement Cans No Issues	LA-CIN01.001-Cans	Solid	0	0	1	0
S816663	25	57	SP AG Cement Cans No Issues	LA-CIN01.001-Cans	Solid	0	0	1	0
S816414	25	57	SP AG Cement Cans No Issues	LA-CIN01.001-Cans	Solid	0	0	1	0
S833881	25	57	SP AG Cement Cans No Issues	LA-CIN01.001-Cans	Solid	0	0	1	0

PKG_ID	WASTE_CD	Solution Package	Description	Waste Stream	Waste Type	Needs Remediation	Remediation Planned	Needs Characterization	CCP In Process
S816416	25	57	SP AG Cement Cans No Issues	LA-CIN01.001-Cans	Solid	0	0	1	0
S816417	25	57	SP AG Cement Cans No Issues	LA-CIN01.001-Cans	Solid	0	0	1	0
S816433	25	57	SP AG Cement Cans No Issues	LA-CIN01.001-Cans	Solid	0	0	1	0
S816439	25	57	SP AG Cement Cans No Issues	LA-CIN01.001-Cans	Solid	0	0	1	0
S816440	25	57	SP AG Cement Cans No Issues	LA-CIN01.001-Cans	Solid	0	0	1	0
S833923	25	57	SP AG Cement Cans No Issues	LA-CIN01.001-Cans	Solid	0	0	1	0
S816445	25	57	SP AG Cement Cans No Issues	LA-CIN01.001-Cans	Solid	0	0	1	0
S816461	25	57	SP AG Cement Cans No Issues	LA-CIN01.001-Cans	Solid	0	0	1	0
S833899	25	57	SP AG Cement Cans No Issues	LA-CIN01.001-Cans	Solid	0	0	1	0
S816467	25	57	SP AG Cement Cans No Issues	LA-CIN01.001-Cans	Solid	0	0	1	0
S816468	25	57	SP AG Cement Cans No Issues	LA-CIN01.001-Cans	Solid	0	0	1	0
S833469	25	57	SP AG Cement Cans No Issues	LA-CIN01.001-Cans	Solid	0	0	1	0
S816409	25	57	SP AG Cement Cans No Issues	LA-CIN01.001-Cans	Solid	0	0	1	0
S832552	25	57	SP AG Cement Cans No Issues	LA-CIN01.001-Cans	Solid	0	0	1	0
S833076	25	57	SP AG Cement Cans No Issues	LA-CIN01.001-Cans	Solid	0	0	1	0
S833069	25	57	SP AG Cement Cans No Issues	LA-CIN01.001-Cans	Solid	0	0	1	0
S816882	25	57	SP AG Cement Cans No Issues	LA-CIN01.001-Cans	Solid	0	0	1	0
S816887	25	57	SP AG Cement Cans No Issues	LA-CIN01.001-Cans	Solid	0	0	1	0
S833018	25	57	SP AG Cement Cans No Issues	LA-CIN01.001-Cans	Solid	0	0	1	0
S833017	25	57	SP AG Cement Cans No Issues	LA-CIN01.001-Cans	Solid	0	0	1	0
S833014	25	57	SP AG Cement Cans No Issues	LA-CIN01.001-Cans	Solid	0	0	1	0
S816890	25	57	SP AG Cement Cans No Issues	LA-CIN01.001-Cans	Solid	0	0	1	0
S832592	25	57	SP AG Cement Cans No Issues	LA-CIN01.001-Cans	Solid	0	0	1	0
S832578	25	57	SP AG Cement Cans No Issues	LA-CIN01.001-Cans	Solid	0	0	1	0
S816900	25	57	SP AG Cement Cans No Issues	LA-CIN01.001-Cans	Solid	0	0	1	0
S833482	25	57	SP AG Cement Cans No Issues	LA-CIN01.001-Cans	Solid	0	0	1	0
S832554	25	57	SP AG Cement Cans No Issues	LA-CIN01.001-Cans	Solid	0	0	1	0
S816879	25	57	SP AG Cement Cans No Issues	LA-CIN01.001-Cans	Solid	0	0	1	0
S832550	25	57	SP AG Cement Cans No Issues	LA-CIN01.001-Cans	Solid	0	0	1	0
S832549	25	57	SP AG Cement Cans No Issues	LA-CIN01.001-Cans	Solid	0	0	1	0
S832548	25	57	SP AG Cement Cans No Issues	LA-CIN01.001-Cans	Solid	0	0	1	0
S832522	25	57	SP AG Cement Cans No Issues	LA-CIN01.001-Cans	Solid	0	0	1	0
S832504	25	57	SP AG Cement Cans No Issues	LA-CIN01.001-Cans	Solid	0	0	1	0
S816915	25	57	SP AG Cement Cans No Issues	LA-CIN01.001-Cans	Solid	0	0	1	0
S816916	25	57	SP AG Cement Cans No Issues	LA-CIN01.001-Cans	Solid	0	0	1	0
S816926	25	57	SP AG Cement Cans No Issues	LA-CIN01.001-Cans	Solid	0	0	1	0
S816927	25	57	SP AG Cement Cans No Issues	LA-CIN01.001-Cans	Solid	0	0	1	0
S832482	25	57	SP AG Cement Cans No Issues	LA-CIN01.001-Cans	Solid	0	0	1	0
S832480	25	57	SP AG Cement Cans No Issues	LA-CIN01.001-Cans	Solid	0	0	1	0
S816901	25	57	SP AG Cement Cans No Issues	LA-CIN01.001-Cans	Solid	0	0	1	0
S816828	25	57	SP AG Cement Cans No Issues	LA-CIN01.001-Cans	Solid	0	0	1	0
S833468	25	57	SP AG Cement Cans No Issues	LA-CIN01.001-Cans	Solid	0	0	1	0
S833466	25	57	SP AG Cement Cans No Issues	LA-CIN01.001-Cans	Solid	0	0	1	0
S833436	25	57	SP AG Cement Cans No Issues	LA-CIN01.001-Cans	Solid	0	0	1	0
S833432	25	57	SP AG Cement Cans No Issues	LA-CIN01.001-Cans	Solid	0	0	1	0
S833413	25	57	SP AG Cement Cans No Issues	LA-CIN01.001-Cans	Solid	0	0	1	0
S833411	25	57	SP AG Cement Cans No Issues	LA-CIN01.001-Cans	Solid	0	0	1	0
S833409	25	57	SP AG Cement Cans No Issues	LA-CIN01.001-Cans	Solid	0	0	1	0
S833363	25	57	SP AG Cement Cans No Issues	LA-CIN01.001-Cans	Solid	0	0	1	0
S833362	25	57	SP AG Cement Cans No Issues	LA-CIN01.001-Cans	Solid	0	0	1	0
S833356	25	57	SP AG Cement Cans No Issues	LA-CIN01.001-Cans	Solid	0	0	1	0

PKG_ID	WASTE_CD	Solution Package	Description	Waste Stream	Waste Type	Needs Remediation	Remediation Planned	Needs Characterization	CCP In Process
S816813	25	57	SP AG Cement Cans No Issues	LA-CIN01.001-Cans	Solid	0	0	1	0
S833121	25	57	SP AG Cement Cans No Issues	LA-CIN01.001-Cans	Solid	0	0	1	0
S816825	25	57	SP AG Cement Cans No Issues	LA-CIN01.001-Cans	Solid	0	0	1	0
S833232	25	57	SP AG Cement Cans No Issues	LA-CIN01.001-Cans	Solid	0	0	1	0
S833297	25	57	SP AG Cement Cans No Issues	LA-CIN01.001-Cans	Solid	0	0	1	0
S833269	25	57	SP AG Cement Cans No Issues	LA-CIN01.001-Cans	Solid	0	0	1	0
S833266	25	57	SP AG Cement Cans No Issues	LA-CIN01.001-Cans	Solid	0	0	1	0
S833265	25	57	SP AG Cement Cans No Issues	LA-CIN01.001-Cans	Solid	0	0	1	0
S833264	25	57	SP AG Cement Cans No Issues	LA-CIN01.001-Cans	Solid	0	0	1	0
S816832	25	57	SP AG Cement Cans No Issues	LA-CIN01.001-Cans	Solid	0	0	1	0
S833256	25	57	SP AG Cement Cans No Issues	LA-CIN01.001-Cans	Solid	0	0	1	0
S833244	25	57	SP AG Cement Cans No Issues	LA-CIN01.001-Cans	Solid	0	0	1	0
S816837	25	57	SP AG Cement Cans No Issues	LA-CIN01.001-Cans	Solid	0	0	1	0
S816861	25	57	SP AG Cement Cans No Issues	LA-CIN01.001-Cans	Solid	0	0	1	0
S816869	25	57	SP AG Cement Cans No Issues	LA-CIN01.001-Cans	Solid	0	0	1	0
S816305	25	57	SP AG Cement Cans No Issues	LA-CIN01.001-Cans	Solid	0	0	1	0
S816814	25	57	SP AG Cement Cans No Issues	LA-CIN01.001-Cans	Solid	0	0	1	0
S853646	25	57	SP AG Cement Cans No Issues	LA-CIN01.001-Cans	Solid	0	0	1	0
S852911	25	57	SP AG Cement Cans No Issues	LA-CIN01.001-Cans	Solid	0	0	1	0
S853723	25	57	SP AG Cement Cans No Issues	LA-CIN01.001-Cans	Solid	0	0	1	0
S802613	25	57	SP AG Cement Cans No Issues	LA-CIN01.001-Cans	Solid	0	0	1	0
S853718	25	57	SP AG Cement Cans No Issues	LA-CIN01.001-Cans	Solid	0	0	1	0
S853717	25	57	SP AG Cement Cans No Issues	LA-CIN01.001-Cans	Solid	0	0	1	0
S802632	25	57	SP AG Cement Cans No Issues	LA-CIN01.001-Cans	Solid	0	0	1	0
S802638	25	57	SP AG Cement Cans No Issues	LA-CIN01.001-Cans	Solid	0	0	1	0
S802641	25	57	SP AG Cement Cans No Issues	LA-CIN01.001-Cans	Solid	0	0	1	0
S853707	25	57	SP AG Cement Cans No Issues	LA-CIN01.001-Cans	Solid	0	0	1	0
S853705	25	57	SP AG Cement Cans No Issues	LA-CIN01.001-Cans	Solid	0	0	1	0
S853650	25	57	SP AG Cement Cans No Issues	LA-CIN01.001-Cans	Solid	0	0	1	0
S853734	25	57	SP AG Cement Cans No Issues	LA-CIN01.001-Cans	Solid	0	0	1	0
S853648	25	57	SP AG Cement Cans No Issues	LA-CIN01.001-Cans	Solid	0	0	1	0
S802599	25	57	SP AG Cement Cans No Issues	LA-CIN01.001-Cans	Solid	0	0	1	0
S853645	25	57	SP AG Cement Cans No Issues	LA-CIN01.001-Cans	Solid	0	0	1	0
S853644	25	57	SP AG Cement Cans No Issues	LA-CIN01.001-Cans	Solid	0	0	1	0
S802644	25	57	SP AG Cement Cans No Issues	LA-CIN01.001-Cans	Solid	0	0	1	0
S853627	25	57	SP AG Cement Cans No Issues	LA-CIN01.001-Cans	Solid	0	0	1	0
S853626	25	57	SP AG Cement Cans No Issues	LA-CIN01.001-Cans	Solid	0	0	1	0
S853625	25	57	SP AG Cement Cans No Issues	LA-CIN01.001-Cans	Solid	0	0	1	0
S853574	25	57	SP AG Cement Cans No Issues	LA-CIN01.001-Cans	Solid	0	0	1	0
S853573	25	57	SP AG Cement Cans No Issues	LA-CIN01.001-Cans	Solid	0	0	1	0
S802660	25	57	SP AG Cement Cans No Issues	LA-CIN01.001-Cans	Solid	0	0	1	0
S853567	25	57	SP AG Cement Cans No Issues	LA-CIN01.001-Cans	Solid	0	0	1	0
S802678	25	57	SP AG Cement Cans No Issues	LA-CIN01.001-Cans	Solid	0	0	1	0
S853548	25	57	SP AG Cement Cans No Issues	LA-CIN01.001-Cans	Solid	0	0	1	0
S853649	25	57	SP AG Cement Cans No Issues	LA-CIN01.001-Cans	Solid	0	0	1	0
S853850	25	57	SP AG Cement Cans No Issues	LA-CIN01.001-Cans	Solid	0	0	1	0
S793755	25	57	SP AG Cement Cans No Issues	LA-CIN01.001-Cans	Solid	0	0	1	0
S793762	25	57	SP AG Cement Cans No Issues	LA-CIN01.001-Cans	Solid	0	0	1	0
S793767	25	57	SP AG Cement Cans No Issues	LA-CIN01.001-Cans	Solid	0	0	1	0
S853876	25	57	SP AG Cement Cans No Issues	LA-CIN01.001-Cans	Solid	0	0	1	0
S853875	25	57	SP AG Cement Cans No Issues	LA-CIN01.001-Cans	Solid	0	0	1	0

PKG_ID	WASTE_CD	Solution Package	Description	Waste Stream	Waste Type	Needs Remediation	Remediation Planned	Needs Characterization	CCP In Process
S853868	25	57	SP AG Cement Cans No Issues	LA-CIN01.001-Cans	Solid	0	0	1	0
S793772	25	57	SP AG Cement Cans No Issues	LA-CIN01.001-Cans	Solid	0	0	1	0
S793779	25	57	SP AG Cement Cans No Issues	LA-CIN01.001-Cans	Solid	0	0	1	0
S853861	25	57	SP AG Cement Cans No Issues	LA-CIN01.001-Cans	Solid	0	0	1	0
S853855	25	57	SP AG Cement Cans No Issues	LA-CIN01.001-Cans	Solid	0	0	1	0
S853854	25	57	SP AG Cement Cans No Issues	LA-CIN01.001-Cans	Solid	0	0	1	0
S802612	25	57	SP AG Cement Cans No Issues	LA-CIN01.001-Cans	Solid	0	0	1	0
S853852	25	57	SP AG Cement Cans No Issues	LA-CIN01.001-Cans	Solid	0	0	1	0
S853543	25	57	SP AG Cement Cans No Issues	LA-CIN01.001-Cans	Solid	0	0	1	0
S794448	25	57	SP AG Cement Cans No Issues	LA-CIN01.001-Cans	Solid	0	0	1	0
S794450	25	57	SP AG Cement Cans No Issues	LA-CIN01.001-Cans	Solid	0	0	1	0
S801677	25	57	SP AG Cement Cans No Issues	LA-CIN01.001-Cans	Solid	0	0	1	0
S801681	25	57	SP AG Cement Cans No Issues	LA-CIN01.001-Cans	Solid	0	0	1	0
S853801	25	57	SP AG Cement Cans No Issues	LA-CIN01.001-Cans	Solid	0	0	1	0
S853774	25	57	SP AG Cement Cans No Issues	LA-CIN01.001-Cans	Solid	0	0	1	0
S801682	25	57	SP AG Cement Cans No Issues	LA-CIN01.001-Cans	Solid	0	0	1	0
S802516	25	57	SP AG Cement Cans No Issues	LA-CIN01.001-Cans	Solid	0	0	1	0
S853770	25	57	SP AG Cement Cans No Issues	LA-CIN01.001-Cans	Solid	0	0	1	0
S853769	25	57	SP AG Cement Cans No Issues	LA-CIN01.001-Cans	Solid	0	0	1	0
S802524	25	57	SP AG Cement Cans No Issues	LA-CIN01.001-Cans	Solid	0	0	1	0
S802581	25	57	SP AG Cement Cans No Issues	LA-CIN01.001-Cans	Solid	0	0	1	0
S853853	25	57	SP AG Cement Cans No Issues	LA-CIN01.001-Cans	Solid	0	0	1	0
S802771	25	57	SP AG Cement Cans No Issues	LA-CIN01.001-Cans	Solid	0	0	1	0
S853034	25	57	SP AG Cement Cans No Issues	LA-CIN01.001-Cans	Solid	0	0	1	0
S853033	25	57	SP AG Cement Cans No Issues	LA-CIN01.001-Cans	Solid	0	0	1	0
S802765	25	57	SP AG Cement Cans No Issues	LA-CIN01.001-Cans	Solid	0	0	1	0
S802766	25	57	SP AG Cement Cans No Issues	LA-CIN01.001-Cans	Solid	0	0	1	0
S852998	25	57	SP AG Cement Cans No Issues	LA-CIN01.001-Cans	Solid	0	0	1	0
S852997	25	57	SP AG Cement Cans No Issues	LA-CIN01.001-Cans	Solid	0	0	1	0
S852982	25	57	SP AG Cement Cans No Issues	LA-CIN01.001-Cans	Solid	0	0	1	0
S852981	25	57	SP AG Cement Cans No Issues	LA-CIN01.001-Cans	Solid	0	0	1	0
S852980	25	57	SP AG Cement Cans No Issues	LA-CIN01.001-Cans	Solid	0	0	1	0
S852979	25	57	SP AG Cement Cans No Issues	LA-CIN01.001-Cans	Solid	0	0	1	0
S852975	25	57	SP AG Cement Cans No Issues	LA-CIN01.001-Cans	Solid	0	0	1	0
S853545	25	57	SP AG Cement Cans No Issues	LA-CIN01.001-Cans	Solid	0	0	1	0
S802767	25	57	SP AG Cement Cans No Issues	LA-CIN01.001-Cans	Solid	0	0	1	0
S853272	25	57	SP AG Cement Cans No Issues	LA-CIN01.001-Cans	Solid	0	0	1	0
S802789	25	57	SP AG Cement Cans No Issues	LA-CIN01.001-Cans	Solid	0	0	1	0
S802799	25	57	SP AG Cement Cans No Issues	LA-CIN01.001-Cans	Solid	0	0	1	0
S802800	25	57	SP AG Cement Cans No Issues	LA-CIN01.001-Cans	Solid	0	0	1	0
S802808	25	57	SP AG Cement Cans No Issues	LA-CIN01.001-Cans	Solid	0	0	1	0
S802809	25	57	SP AG Cement Cans No Issues	LA-CIN01.001-Cans	Solid	0	0	1	0
S802812	25	57	SP AG Cement Cans No Issues	LA-CIN01.001-Cans	Solid	0	0	1	0
S802940	25	57	SP AG Cement Cans No Issues	LA-CIN01.001-Cans	Solid	0	0	1	0
S802830	25	57	SP AG Cement Cans No Issues	LA-CIN01.001-Cans	Solid	0	0	1	0
S813454	25	57	SP AG Cement Cans No Issues	LA-CIN01.001-Cans	Solid	0	0	1	0
S852952	25	57	SP AG Cement Cans No Issues	LA-CIN01.001-Cans	Solid	0	0	1	0
S802834	25	57	SP AG Cement Cans No Issues	LA-CIN01.001-Cans	Solid	0	0	1	0
S852913	25	57	SP AG Cement Cans No Issues	LA-CIN01.001-Cans	Solid	0	0	1	0
S852974	25	57	SP AG Cement Cans No Issues	LA-CIN01.001-Cans	Solid	0	0	1	0
S853352	25	57	SP AG Cement Cans No Issues	LA-CIN01.001-Cans	Solid	0	0	1	0

PKG_ID	WASTE_CD	Solution Package	Description	Waste Stream	Waste Type	Needs Remediation	Remediation Planned	Needs Characterization	CCP In Process
S854574	25	57	SP AG Cement Cans No Issues	LA-CIN01.001-Cans	Solid	0	0	1	0
S853512	25	57	SP AG Cement Cans No Issues	LA-CIN01.001-Cans	Solid	0	0	1	0
S853500	25	57	SP AG Cement Cans No Issues	LA-CIN01.001-Cans	Solid	0	0	1	0
S853499	25	57	SP AG Cement Cans No Issues	LA-CIN01.001-Cans	Solid	0	0	1	0
S853496	25	57	SP AG Cement Cans No Issues	LA-CIN01.001-Cans	Solid	0	0	1	0
S802680	25	57	SP AG Cement Cans No Issues	LA-CIN01.001-Cans	Solid	0	0	1	0
S802695	25	57	SP AG Cement Cans No Issues	LA-CIN01.001-Cans	Solid	0	0	1	0
S853482	25	57	SP AG Cement Cans No Issues	LA-CIN01.001-Cans	Solid	0	0	1	0
S802699	25	57	SP AG Cement Cans No Issues	LA-CIN01.001-Cans	Solid	0	0	1	0
S802713	25	57	SP AG Cement Cans No Issues	LA-CIN01.001-Cans	Solid	0	0	1	0
S853466	25	57	SP AG Cement Cans No Issues	LA-CIN01.001-Cans	Solid	0	0	1	0
S853355	25	57	SP AG Cement Cans No Issues	LA-CIN01.001-Cans	Solid	0	0	1	0
S853269	25	57	SP AG Cement Cans No Issues	LA-CIN01.001-Cans	Solid	0	0	1	0
S853353	25	57	SP AG Cement Cans No Issues	LA-CIN01.001-Cans	Solid	0	0	1	0
S853270	25	57	SP AG Cement Cans No Issues	LA-CIN01.001-Cans	Solid	0	0	1	0
S853348	25	57	SP AG Cement Cans No Issues	LA-CIN01.001-Cans	Solid	0	0	1	0
S853328	25	57	SP AG Cement Cans No Issues	LA-CIN01.001-Cans	Solid	0	0	1	0
S853327	25	57	SP AG Cement Cans No Issues	LA-CIN01.001-Cans	Solid	0	0	1	0
S802732	25	57	SP AG Cement Cans No Issues	LA-CIN01.001-Cans	Solid	0	0	1	0
S802735	25	57	SP AG Cement Cans No Issues	LA-CIN01.001-Cans	Solid	0	0	1	0
S853318	25	57	SP AG Cement Cans No Issues	LA-CIN01.001-Cans	Solid	0	0	1	0
S853316	25	57	SP AG Cement Cans No Issues	LA-CIN01.001-Cans	Solid	0	0	1	0
S802743	25	57	SP AG Cement Cans No Issues	LA-CIN01.001-Cans	Solid	0	0	1	0
S802746	25	57	SP AG Cement Cans No Issues	LA-CIN01.001-Cans	Solid	0	0	1	0
S802756	25	57	SP AG Cement Cans No Issues	LA-CIN01.001-Cans	Solid	0	0	1	0
S853273	25	57	SP AG Cement Cans No Issues	LA-CIN01.001-Cans	Solid	0	0	1	0
S853544	25	57	SP AG Cement Cans No Issues	LA-CIN01.001-Cans	Solid	0	0	1	0
S853354	25	57	SP AG Cement Cans No Issues	LA-CIN01.001-Cans	Solid	0	0	1	0
S860063	25	57	SP AG Cement Cans No Issues	LA-CIN01.001-Cans	Solid	0	0	1	0
S861796	25	57	SP AG Cement Cans No Issues	LA-CIN01.001-Cans	Solid	0	0	1	0
S861769	25	57	SP AG Cement Cans No Issues	LA-CIN01.001-Cans	Solid	0	0	1	0
S861754	25	57	SP AG Cement Cans No Issues	LA-CIN01.001-Cans	Solid	0	0	1	0
S861751	25	57	SP AG Cement Cans No Issues	LA-CIN01.001-Cans	Solid	0	0	1	0
S860177	25	57	SP AG Cement Cans No Issues	LA-CIN01.001-Cans	Solid	0	0	1	0
S860155	25	57	SP AG Cement Cans No Issues	LA-CIN01.001-Cans	Solid	0	0	1	0
S860154	25	57	SP AG Cement Cans No Issues	LA-CIN01.001-Cans	Solid	0	0	1	0
S860153	25	57	SP AG Cement Cans No Issues	LA-CIN01.001-Cans	Solid	0	0	1	0
S860147	25	57	SP AG Cement Cans No Issues	LA-CIN01.001-Cans	Solid	0	0	1	0
S860085	25	57	SP AG Cement Cans No Issues	LA-CIN01.001-Cans	Solid	0	0	1	0
S860066	25	57	SP AG Cement Cans No Issues	LA-CIN01.001-Cans	Solid	0	0	1	0
S855574	25	57	SP AG Cement Cans No Issues	LA-CIN01.001-Cans	Solid	0	0	1	0
S860064	25	57	SP AG Cement Cans No Issues	LA-CIN01.001-Cans	Solid	0	0	1	0
S861977	25	57	SP AG Cement Cans No Issues	LA-CIN01.001-Cans	Solid	0	0	1	0
S860061	25	57	SP AG Cement Cans No Issues	LA-CIN01.001-Cans	Solid	0	0	1	0
S860042	25	57	SP AG Cement Cans No Issues	LA-CIN01.001-Cans	Solid	0	0	1	0
S860039	25	57	SP AG Cement Cans No Issues	LA-CIN01.001-Cans	Solid	0	0	1	0
S860006	25	57	SP AG Cement Cans No Issues	LA-CIN01.001-Cans	Solid	0	0	1	0
S855901	25	57	SP AG Cement Cans No Issues	LA-CIN01.001-Cans	Solid	0	0	1	0
S855897	25	57	SP AG Cement Cans No Issues	LA-CIN01.001-Cans	Solid	0	0	1	0
S855888	25	57	SP AG Cement Cans No Issues	LA-CIN01.001-Cans	Solid	0	0	1	0
S855797	25	57	SP AG Cement Cans No Issues	LA-CIN01.001-Cans	Solid	0	0	1	0

PKG_ID	WASTE_CD	Solution Package	Description	Waste Stream	Waste Type	Needs Remediation	Remediation Planned	Needs Characterization	CCP In Process
S855786	25	57	SP AG Cement Cans No Issues	LA-CIN01.001-Cans	Solid	0	0	1	0
S855767	25	57	SP AG Cement Cans No Issues	LA-CIN01.001-Cans	Solid	0	0	1	0
S855690	25	57	SP AG Cement Cans No Issues	LA-CIN01.001-Cans	Solid	0	0	1	0
S793750	25	57	SP AG Cement Cans No Issues	LA-CIN01.001-Cans	Solid	0	0	1	0
S860065	25	57	SP AG Cement Cans No Issues	LA-CIN01.001-Cans	Solid	0	0	1	0
S863623	25	57	SP AG Cement Cans No Issues	LA-CIN01.001-Cans	Solid	0	0	1	0
S871917	25	57	SP AG Cement Cans No Issues	LA-CIN01.001-Cans	Solid	0	0	1	0
S871838	25	57	SP AG Cement Cans No Issues	LA-CIN01.001-Cans	Solid	0	0	1	0
S870151	25	57	SP AG Cement Cans No Issues	LA-CIN01.001-Cans	Solid	0	0	1	0
S870135	25	57	SP AG Cement Cans No Issues	LA-CIN01.001-Cans	Solid	0	0	1	0
S865323	25	57	SP AG Cement Cans No Issues	LA-CIN01.001-Cans	Solid	0	0	1	0
S864713	25	57	SP AG Cement Cans No Issues	LA-CIN01.001-Cans	Solid	0	0	1	0
S864710	25	57	SP AG Cement Cans No Issues	LA-CIN01.001-Cans	Solid	0	0	1	0
S864645	25	57	SP AG Cement Cans No Issues	LA-CIN01.001-Cans	Solid	0	0	1	0
S864605	25	57	SP AG Cement Cans No Issues	LA-CIN01.001-Cans	Solid	0	0	1	0
S864358	25	57	SP AG Cement Cans No Issues	LA-CIN01.001-Cans	Solid	0	0	1	0
S864356	25	57	SP AG Cement Cans No Issues	LA-CIN01.001-Cans	Solid	0	0	1	0
S864232	25	57	SP AG Cement Cans No Issues	LA-CIN01.001-Cans	Solid	0	0	1	0
S861807	25	57	SP AG Cement Cans No Issues	LA-CIN01.001-Cans	Solid	0	0	1	0
S863723	25	57	SP AG Cement Cans No Issues	LA-CIN01.001-Cans	Solid	0	0	1	0
S861969	25	57	SP AG Cement Cans No Issues	LA-CIN01.001-Cans	Solid	0	0	1	0
S863023	25	57	SP AG Cement Cans No Issues	LA-CIN01.001-Cans	Solid	0	0	1	0
S862969	25	57	SP AG Cement Cans No Issues	LA-CIN01.001-Cans	Solid	0	0	1	0
S862925	25	57	SP AG Cement Cans No Issues	LA-CIN01.001-Cans	Solid	0	0	1	0
S862897	25	57	SP AG Cement Cans No Issues	LA-CIN01.001-Cans	Solid	0	0	1	0
S862480	25	57	SP AG Cement Cans No Issues	LA-CIN01.001-Cans	Solid	0	0	1	0
S862399	25	57	SP AG Cement Cans No Issues	LA-CIN01.001-Cans	Solid	0	0	1	0
S862288	25	57	SP AG Cement Cans No Issues	LA-CIN01.001-Cans	Solid	0	0	1	0
S862287	25	57	SP AG Cement Cans No Issues	LA-CIN01.001-Cans	Solid	0	0	1	0
S862050	25	57	SP AG Cement Cans No Issues	LA-CIN01.001-Cans	Solid	0	0	1	0
S862005	25	57	SP AG Cement Cans No Issues	LA-CIN01.001-Cans	Solid	0	0	1	0
S861998	25	57	SP AG Cement Cans No Issues	LA-CIN01.001-Cans	Solid	0	0	1	0
S855573	25	57	SP AG Cement Cans No Issues	LA-CIN01.001-Cans	Solid	0	0	1	0
S864173	25	57	SP AG Cement Cans No Issues	LA-CIN01.001-Cans	Solid	0	0	1	0
S854625	25	57	SP AG Cement Cans No Issues	LA-CIN01.001-Cans	Solid	0	0	1	0
S855186	25	57	SP AG Cement Cans No Issues	LA-CIN01.001-Cans	Solid	0	0	1	0
S855180	25	57	SP AG Cement Cans No Issues	LA-CIN01.001-Cans	Solid	0	0	1	0
S855143	25	57	SP AG Cement Cans No Issues	LA-CIN01.001-Cans	Solid	0	0	1	0
S855142	25	57	SP AG Cement Cans No Issues	LA-CIN01.001-Cans	Solid	0	0	1	0
S855140	25	57	SP AG Cement Cans No Issues	LA-CIN01.001-Cans	Solid	0	0	1	0
S793454	25	57	SP AG Cement Cans No Issues	LA-CIN01.001-Cans	Solid	0	0	1	0
S855132	25	57	SP AG Cement Cans No Issues	LA-CIN01.001-Cans	Solid	0	0	1	0
S793683	25	57	SP AG Cement Cans No Issues	LA-CIN01.001-Cans	Solid	0	0	1	0
S793709	25	57	SP AG Cement Cans No Issues	LA-CIN01.001-Cans	Solid	0	0	1	0
S793712	25	57	SP AG Cement Cans No Issues	LA-CIN01.001-Cans	Solid	0	0	1	0
S854636	25	57	SP AG Cement Cans No Issues	LA-CIN01.001-Cans	Solid	0	0	1	0
S855672	25	57	SP AG Cement Cans No Issues	LA-CIN01.001-Cans	Solid	0	0	1	0
S854628	25	57	SP AG Cement Cans No Issues	LA-CIN01.001-Cans	Solid	0	0	1	0
S855206	25	57	SP AG Cement Cans No Issues	LA-CIN01.001-Cans	Solid	0	0	1	0
S854624	25	57	SP AG Cement Cans No Issues	LA-CIN01.001-Cans	Solid	0	0	1	0
S854623	25	57	SP AG Cement Cans No Issues	LA-CIN01.001-Cans	Solid	0	0	1	0

PKG_ID	WASTE_CD	Solution Package	Description	Waste Stream	Waste Type	Needs Remediation	Remediation Planned	Needs Characterization	CCP In Process
S854612	25	57	SP AG Cement Cans No Issues	LA-CIN01.001-Cans	Solid	0	0	1	0
S854609	25	57	SP AG Cement Cans No Issues	LA-CIN01.001-Cans	Solid	0	0	1	0
S854608	25	57	SP AG Cement Cans No Issues	LA-CIN01.001-Cans	Solid	0	0	1	0
S854607	25	57	SP AG Cement Cans No Issues	LA-CIN01.001-Cans	Solid	0	0	1	0
S793735	25	57	SP AG Cement Cans No Issues	LA-CIN01.001-Cans	Solid	0	0	1	0
S854591	25	57	SP AG Cement Cans No Issues	LA-CIN01.001-Cans	Solid	0	0	1	0
S793739	25	57	SP AG Cement Cans No Issues	LA-CIN01.001-Cans	Solid	0	0	1	0
S854582	25	57	SP AG Cement Cans No Issues	LA-CIN01.001-Cans	Solid	0	0	1	0
S854578	25	57	SP AG Cement Cans No Issues	LA-CIN01.001-Cans	Solid	0	0	1	0
S802832	25	57	SP AG Cement Cans No Issues	LA-CIN01.001-Cans	Solid	0	0	1	0
S854635	25	57	SP AG Cement Cans No Issues	LA-CIN01.001-Cans	Solid	0	0	1	0
S855522	25	57	SP AG Cement Cans No Issues	LA-CIN01.001-Cans	Solid	0	0	1	0
S855572	25	57	SP AG Cement Cans No Issues	LA-CIN01.001-Cans	Solid	0	0	1	0
S855571	25	57	SP AG Cement Cans No Issues	LA-CIN01.001-Cans	Solid	0	0	1	0
S855568	25	57	SP AG Cement Cans No Issues	LA-CIN01.001-Cans	Solid	0	0	1	0
S855567	25	57	SP AG Cement Cans No Issues	LA-CIN01.001-Cans	Solid	0	0	1	0
S855551	25	57	SP AG Cement Cans No Issues	LA-CIN01.001-Cans	Solid	0	0	1	0
S855541	25	57	SP AG Cement Cans No Issues	LA-CIN01.001-Cans	Solid	0	0	1	0
S855539	25	57	SP AG Cement Cans No Issues	LA-CIN01.001-Cans	Solid	0	0	1	0
S855538	25	57	SP AG Cement Cans No Issues	LA-CIN01.001-Cans	Solid	0	0	1	0
S855537	25	57	SP AG Cement Cans No Issues	LA-CIN01.001-Cans	Solid	0	0	1	0
S855530	25	57	SP AG Cement Cans No Issues	LA-CIN01.001-Cans	Solid	0	0	1	0
S855529	25	57	SP AG Cement Cans No Issues	LA-CIN01.001-Cans	Solid	0	0	1	0
S855528	25	57	SP AG Cement Cans No Issues	LA-CIN01.001-Cans	Solid	0	0	1	0
S855187	25	57	SP AG Cement Cans No Issues	LA-CIN01.001-Cans	Solid	0	0	1	0
S855526	25	57	SP AG Cement Cans No Issues	LA-CIN01.001-Cans	Solid	0	0	1	0
S855196	25	57	SP AG Cement Cans No Issues	LA-CIN01.001-Cans	Solid	0	0	1	0
S855320	25	57	SP AG Cement Cans No Issues	LA-CIN01.001-Cans	Solid	0	0	1	0
S855311	25	57	SP AG Cement Cans No Issues	LA-CIN01.001-Cans	Solid	0	0	1	0
S855310	25	57	SP AG Cement Cans No Issues	LA-CIN01.001-Cans	Solid	0	0	1	0
S855309	25	57	SP AG Cement Cans No Issues	LA-CIN01.001-Cans	Solid	0	0	1	0
S855295	25	57	SP AG Cement Cans No Issues	LA-CIN01.001-Cans	Solid	0	0	1	0
S855293	25	57	SP AG Cement Cans No Issues	LA-CIN01.001-Cans	Solid	0	0	1	0
S855247	25	57	SP AG Cement Cans No Issues	LA-CIN01.001-Cans	Solid	0	0	1	0
S855230	25	57	SP AG Cement Cans No Issues	LA-CIN01.001-Cans	Solid	0	0	1	0
S855229	25	57	SP AG Cement Cans No Issues	LA-CIN01.001-Cans	Solid	0	0	1	0
S855228	25	57	SP AG Cement Cans No Issues	LA-CIN01.001-Cans	Solid	0	0	1	0
S855207	25	57	SP AG Cement Cans No Issues	LA-CIN01.001-Cans	Solid	0	0	1	0
S853901	25	57	SP AG Cement Cans No Issues	LA-CIN01.001-Cans	Solid	0	0	1	0
S855527	25	57	SP AG Cement Cans No Issues	LA-CIN01.001-Cans	Solid	0	0	1	0
S811671	25	57	SP AG Cement Cans No Issues	LA-CIN01.001-Cans	Solid	0	0	1	0
S811799	25	57	SP AG Cement Cans No Issues	LA-CIN01.001-Cans	Solid	0	0	1	0
S811622	25	57	SP AG Cement Cans No Issues	LA-CIN01.001-Cans	Solid	0	0	1	0
S811626	25	57	SP AG Cement Cans No Issues	LA-CIN01.001-Cans	Solid	0	0	1	0
S811627	25	57	SP AG Cement Cans No Issues	LA-CIN01.001-Cans	Solid	0	0	1	0
S811630	25	57	SP AG Cement Cans No Issues	LA-CIN01.001-Cans	Solid	0	0	1	0
S811637	25	57	SP AG Cement Cans No Issues	LA-CIN01.001-Cans	Solid	0	0	1	0
S811639	25	57	SP AG Cement Cans No Issues	LA-CIN01.001-Cans	Solid	0	0	1	0
S811642	25	57	SP AG Cement Cans No Issues	LA-CIN01.001-Cans	Solid	0	0	1	0
S844318	25	57	SP AG Cement Cans No Issues	LA-CIN01.001-Cans	Solid	0	0	1	0
S844309	25	57	SP AG Cement Cans No Issues	LA-CIN01.001-Cans	Solid	0	0	1	0

PKG_ID	WASTE_CD	Solution Package	Description	Waste Stream	Waste Type	Needs Remediation	Remediation Planned	Needs Characterization	CCP In Process
S844284	25	57	SP AG Cement Cans No Issues	LA-CIN01.001-Cans	Solid	0	0	1	0
S844558	25	57	SP AG Cement Cans No Issues	LA-CIN01.001-Cans	Solid	0	0	1	0
S811659	25	57	SP AG Cement Cans No Issues	LA-CIN01.001-Cans	Solid	0	0	1	0
S844572	25	57	SP AG Cement Cans No Issues	LA-CIN01.001-Cans	Solid	0	0	1	0
S811687	25	57	SP AG Cement Cans No Issues	LA-CIN01.001-Cans	Solid	0	0	1	0
S811692	25	57	SP AG Cement Cans No Issues	LA-CIN01.001-Cans	Solid	0	0	1	0
S811714	25	57	SP AG Cement Cans No Issues	LA-CIN01.001-Cans	Solid	0	0	1	0
S811729	25	57	SP AG Cement Cans No Issues	LA-CIN01.001-Cans	Solid	0	0	1	0
S811731	25	57	SP AG Cement Cans No Issues	LA-CIN01.001-Cans	Solid	0	0	1	0
S811734	25	57	SP AG Cement Cans No Issues	LA-CIN01.001-Cans	Solid	0	0	1	0
S811740	25	57	SP AG Cement Cans No Issues	LA-CIN01.001-Cans	Solid	0	0	1	0
S811759	25	57	SP AG Cement Cans No Issues	LA-CIN01.001-Cans	Solid	0	0	1	0
S844214	25	57	SP AG Cement Cans No Issues	LA-CIN01.001-Cans	Solid	0	0	1	0
S811781	25	57	SP AG Cement Cans No Issues	LA-CIN01.001-Cans	Solid	0	0	1	0
S811786	25	57	SP AG Cement Cans No Issues	LA-CIN01.001-Cans	Solid	0	0	1	0
S845115	25	57	SP AG Cement Cans No Issues	LA-CIN01.001-Cans	Solid	0	0	1	0
S844276	25	57	SP AG Cement Cans No Issues	LA-CIN01.001-Cans	Solid	0	0	1	0
S845024	25	57	SP AG Cement Cans No Issues	LA-CIN01.001-Cans	Solid	0	0	1	0
S845113	25	57	SP AG Cement Cans No Issues	LA-CIN01.001-Cans	Solid	0	0	1	0
S804989	25	57	SP AG Cement Cans No Issues	LA-CIN01.001-Cans	Solid	0	0	1	0
S845087	25	57	SP AG Cement Cans No Issues	LA-CIN01.001-Cans	Solid	0	0	1	0
S845085	25	57	SP AG Cement Cans No Issues	LA-CIN01.001-Cans	Solid	0	0	1	0
S845077	25	57	SP AG Cement Cans No Issues	LA-CIN01.001-Cans	Solid	0	0	1	0
S852889	25	57	SP AG Cement Cans No Issues	LA-CIN01.001-Cans	Solid	0	0	1	0
S805001	25	57	SP AG Cement Cans No Issues	LA-CIN01.001-Cans	Solid	0	0	1	0
S802828	25	57	SP AG Cement Cans No Issues	LA-CIN01.001-Cans	Solid	0	0	1	0
S805052	25	57	SP AG Cement Cans No Issues	LA-CIN01.001-Cans	Solid	0	0	1	0
S805060	25	57	SP AG Cement Cans No Issues	LA-CIN01.001-Cans	Solid	0	0	1	0
S845040	25	57	SP AG Cement Cans No Issues	LA-CIN01.001-Cans	Solid	0	0	1	0
S811617	25	57	SP AG Cement Cans No Issues	LA-CIN01.001-Cans	Solid	0	0	1	0
S845026	25	57	SP AG Cement Cans No Issues	LA-CIN01.001-Cans	Solid	0	0	1	0
S811810	25	57	SP AG Cement Cans No Issues	LA-CIN01.001-Cans	Solid	0	0	1	0
S844722	25	57	SP AG Cement Cans No Issues	LA-CIN01.001-Cans	Solid	0	0	1	0
S844716	25	57	SP AG Cement Cans No Issues	LA-CIN01.001-Cans	Solid	0	0	1	0
S844715	25	57	SP AG Cement Cans No Issues	LA-CIN01.001-Cans	Solid	0	0	1	0
S844707	25	57	SP AG Cement Cans No Issues	LA-CIN01.001-Cans	Solid	0	0	1	0
S805288	25	57	SP AG Cement Cans No Issues	LA-CIN01.001-Cans	Solid	0	0	1	0
S844676	25	57	SP AG Cement Cans No Issues	LA-CIN01.001-Cans	Solid	0	0	1	0
S844670	25	57	SP AG Cement Cans No Issues	LA-CIN01.001-Cans	Solid	0	0	1	0
S844668	25	57	SP AG Cement Cans No Issues	LA-CIN01.001-Cans	Solid	0	0	1	0
S844612	25	57	SP AG Cement Cans No Issues	LA-CIN01.001-Cans	Solid	0	0	1	0
S844607	25	57	SP AG Cement Cans No Issues	LA-CIN01.001-Cans	Solid	0	0	1	0
S844595	25	57	SP AG Cement Cans No Issues	LA-CIN01.001-Cans	Solid	0	0	1	0
S811613	25	57	SP AG Cement Cans No Issues	LA-CIN01.001-Cans	Solid	0	0	1	0
S845028	25	57	SP AG Cement Cans No Issues	LA-CIN01.001-Cans	Solid	0	0	1	0
S813356	25	57	SP AG Cement Cans No Issues	LA-CIN01.001-Cans	Solid	0	0	1	0
S811798	25	57	SP AG Cement Cans No Issues	LA-CIN01.001-Cans	Solid	0	0	1	0
S811917	25	57	SP AG Cement Cans No Issues	LA-CIN01.001-Cans	Solid	0	0	1	0
S813212	25	57	SP AG Cement Cans No Issues	LA-CIN01.001-Cans	Solid	0	0	1	0
S813221	25	57	SP AG Cement Cans No Issues	LA-CIN01.001-Cans	Solid	0	0	1	0
S813223	25	57	SP AG Cement Cans No Issues	LA-CIN01.001-Cans	Solid	0	0	1	0

PKG_ID	WASTE_CD	Solution Package	Description	Waste Stream	Waste Type	Needs Remediation	Remediation Planned	Needs Characterization	CCP In Process
S842537	25	57	SP AG Cement Cans No Issues	LA-CIN01.001-Cans	Solid	0	0	1	0
S813287	25	57	SP AG Cement Cans No Issues	LA-CIN01.001-Cans	Solid	0	0	1	0
S813288	25	57	SP AG Cement Cans No Issues	LA-CIN01.001-Cans	Solid	0	0	1	0
S842522	25	57	SP AG Cement Cans No Issues	LA-CIN01.001-Cans	Solid	0	0	1	0
S813298	25	57	SP AG Cement Cans No Issues	LA-CIN01.001-Cans	Solid	0	0	1	0
S813308	25	57	SP AG Cement Cans No Issues	LA-CIN01.001-Cans	Solid	0	0	1	0
S811907	25	57	SP AG Cement Cans No Issues	LA-CIN01.001-Cans	Solid	0	0	1	0
S813348	25	57	SP AG Cement Cans No Issues	LA-CIN01.001-Cans	Solid	0	0	1	0
S811876	25	57	SP AG Cement Cans No Issues	LA-CIN01.001-Cans	Solid	0	0	1	0
S813357	25	57	SP AG Cement Cans No Issues	LA-CIN01.001-Cans	Solid	0	0	1	0
S813371	25	57	SP AG Cement Cans No Issues	LA-CIN01.001-Cans	Solid	0	0	1	0
S842454	25	57	SP AG Cement Cans No Issues	LA-CIN01.001-Cans	Solid	0	0	1	0
S813387	25	57	SP AG Cement Cans No Issues	LA-CIN01.001-Cans	Solid	0	0	1	0
S813416	25	57	SP AG Cement Cans No Issues	LA-CIN01.001-Cans	Solid	0	0	1	0
S813420	25	57	SP AG Cement Cans No Issues	LA-CIN01.001-Cans	Solid	0	0	1	0
S813442	25	57	SP AG Cement Cans No Issues	LA-CIN01.001-Cans	Solid	0	0	1	0
S842388	25	57	SP AG Cement Cans No Issues	LA-CIN01.001-Cans	Solid	0	0	1	0
S813443	25	57	SP AG Cement Cans No Issues	LA-CIN01.001-Cans	Solid	0	0	1	0
S842384	25	57	SP AG Cement Cans No Issues	LA-CIN01.001-Cans	Solid	0	0	1	0
S813446	25	57	SP AG Cement Cans No Issues	LA-CIN01.001-Cans	Solid	0	0	1	0
S813453	25	57	SP AG Cement Cans No Issues	LA-CIN01.001-Cans	Solid	0	0	1	0
S813309	25	57	SP AG Cement Cans No Issues	LA-CIN01.001-Cans	Solid	0	0	1	0
S811860	25	57	SP AG Cement Cans No Issues	LA-CIN01.001-Cans	Solid	0	0	1	0
S811812	25	57	SP AG Cement Cans No Issues	LA-CIN01.001-Cans	Solid	0	0	1	0
S844189	25	57	SP AG Cement Cans No Issues	LA-CIN01.001-Cans	Solid	0	0	1	0
S811822	25	57	SP AG Cement Cans No Issues	LA-CIN01.001-Cans	Solid	0	0	1	0
S811829	25	57	SP AG Cement Cans No Issues	LA-CIN01.001-Cans	Solid	0	0	1	0
S811830	25	57	SP AG Cement Cans No Issues	LA-CIN01.001-Cans	Solid	0	0	1	0
S811831	25	57	SP AG Cement Cans No Issues	LA-CIN01.001-Cans	Solid	0	0	1	0
S811834	25	57	SP AG Cement Cans No Issues	LA-CIN01.001-Cans	Solid	0	0	1	0
S843648	25	57	SP AG Cement Cans No Issues	LA-CIN01.001-Cans	Solid	0	0	1	0
S811847	25	57	SP AG Cement Cans No Issues	LA-CIN01.001-Cans	Solid	0	0	1	0
S811858	25	57	SP AG Cement Cans No Issues	LA-CIN01.001-Cans	Solid	0	0	1	0
S843626	25	57	SP AG Cement Cans No Issues	LA-CIN01.001-Cans	Solid	0	0	1	0
S811908	25	57	SP AG Cement Cans No Issues	LA-CIN01.001-Cans	Solid	0	0	1	0
S843601	25	57	SP AG Cement Cans No Issues	LA-CIN01.001-Cans	Solid	0	0	1	0
S845074	25	57	SP AG Cement Cans No Issues	LA-CIN01.001-Cans	Solid	0	0	1	0
S811864	25	57	SP AG Cement Cans No Issues	LA-CIN01.001-Cans	Solid	0	0	1	0
S843594	25	57	SP AG Cement Cans No Issues	LA-CIN01.001-Cans	Solid	0	1	0	0
S843593	25	57	SP AG Cement Cans No Issues	LA-CIN01.001-Cans	Solid	0	1	0	0
S843577	25	57	SP AG Cement Cans No Issues	LA-CIN01.001-Cans	Solid	0	0	1	0
S843576	25	57	SP AG Cement Cans No Issues	LA-CIN01.001-Cans	Solid	0	0	1	0
S843573	25	57	SP AG Cement Cans No Issues	LA-CIN01.001-Cans	Solid	0	0	1	0
S843565	25	57	SP AG Cement Cans No Issues	LA-CIN01.001-Cans	Solid	0	0	1	0
S843555	25	57	SP AG Cement Cans No Issues	LA-CIN01.001-Cans	Solid	0	0	1	0
S811868	25	57	SP AG Cement Cans No Issues	LA-CIN01.001-Cans	Solid	0	0	1	0
S811869	25	57	SP AG Cement Cans No Issues	LA-CIN01.001-Cans	Solid	0	0	1	0
S811871	25	57	SP AG Cement Cans No Issues	LA-CIN01.001-Cans	Solid	0	0	1	0
S811872	25	57	SP AG Cement Cans No Issues	LA-CIN01.001-Cans	Solid	0	0	1	0
S843618	25	57	SP AG Cement Cans No Issues	LA-CIN01.001-Cans	Solid	0	0	1	0
S802976	25	57	SP AG Cement Cans No Issues	LA-CIN01.001-Cans	Solid	0	0	1	0

PKG_ID	WASTE_CD	Solution Package	Description	Waste Stream	Waste Type	Needs Remediation	Remediation Planned	Needs Characterization	CCP In Process
S851790	25	57	SP AG Cement Cans No Issues	LA-CIN01.001-Cans	Solid	0	0	1	0
S802959	25	57	SP AG Cement Cans No Issues	LA-CIN01.001-Cans	Solid	0	0	1	0
S802960	25	57	SP AG Cement Cans No Issues	LA-CIN01.001-Cans	Solid	0	0	1	0
S851759	25	57	SP AG Cement Cans No Issues	LA-CIN01.001-Cans	Solid	0	0	1	0
S802964	25	57	SP AG Cement Cans No Issues	LA-CIN01.001-Cans	Solid	0	0	1	0
S851750	25	57	SP AG Cement Cans No Issues	LA-CIN01.001-Cans	Solid	0	0	1	0
S851749	25	57	SP AG Cement Cans No Issues	LA-CIN01.001-Cans	Solid	0	0	1	0
S802965	25	57	SP AG Cement Cans No Issues	LA-CIN01.001-Cans	Solid	0	0	1	0
S851723	25	57	SP AG Cement Cans No Issues	LA-CIN01.001-Cans	Solid	0	0	1	0
S802966	25	57	SP AG Cement Cans No Issues	LA-CIN01.001-Cans	Solid	0	0	1	0
S802967	25	57	SP AG Cement Cans No Issues	LA-CIN01.001-Cans	Solid	0	0	1	0
S802968	25	57	SP AG Cement Cans No Issues	LA-CIN01.001-Cans	Solid	0	0	1	0
S803077	25	57	SP AG Cement Cans No Issues	LA-CIN01.001-Cans	Solid	0	0	1	0
S802974	25	57	SP AG Cement Cans No Issues	LA-CIN01.001-Cans	Solid	0	0	1	0
S851803	25	57	SP AG Cement Cans No Issues	LA-CIN01.001-Cans	Solid	0	0	1	0
S802992	25	57	SP AG Cement Cans No Issues	LA-CIN01.001-Cans	Solid	0	0	1	0
S802993	25	57	SP AG Cement Cans No Issues	LA-CIN01.001-Cans	Solid	0	0	1	0
S803015	25	57	SP AG Cement Cans No Issues	LA-CIN01.001-Cans	Solid	0	0	1	0
S803030	25	57	SP AG Cement Cans No Issues	LA-CIN01.001-Cans	Solid	0	0	1	0
S803036	25	57	SP AG Cement Cans No Issues	LA-CIN01.001-Cans	Solid	0	0	1	0
S803043	25	57	SP AG Cement Cans No Issues	LA-CIN01.001-Cans	Solid	0	0	1	0
S803045	25	57	SP AG Cement Cans No Issues	LA-CIN01.001-Cans	Solid	0	0	1	0
S803048	25	57	SP AG Cement Cans No Issues	LA-CIN01.001-Cans	Solid	0	0	1	0
S803055	25	57	SP AG Cement Cans No Issues	LA-CIN01.001-Cans	Solid	0	0	1	0
S803056	25	57	SP AG Cement Cans No Issues	LA-CIN01.001-Cans	Solid	0	0	1	0
S805034	25	57	SP AG Cement Cans No Issues	LA-CIN01.001-Cans	Solid	0	0	1	0
S803060	25	57	SP AG Cement Cans No Issues	LA-CIN01.001-Cans	Solid	0	0	1	0
S845133	25	57	SP AG Cement Cans No Issues	LA-CIN01.001-Cans	Solid	0	0	1	0
S802970	25	57	SP AG Cement Cans No Issues	LA-CIN01.001-Cans	Solid	0	0	1	0
S852572	25	57	SP AG Cement Cans No Issues	LA-CIN01.001-Cans	Solid	0	0	1	0
S852888	25	57	SP AG Cement Cans No Issues	LA-CIN01.001-Cans	Solid	0	0	1	0
S852887	25	57	SP AG Cement Cans No Issues	LA-CIN01.001-Cans	Solid	0	0	1	0
S802853	25	57	SP AG Cement Cans No Issues	LA-CIN01.001-Cans	Solid	0	0	1	0
S802877	25	57	SP AG Cement Cans No Issues	LA-CIN01.001-Cans	Solid	0	0	1	0
S852600	25	57	SP AG Cement Cans No Issues	LA-CIN01.001-Cans	Solid	0	0	1	0
S852599	25	57	SP AG Cement Cans No Issues	LA-CIN01.001-Cans	Solid	0	0	1	0
S852598	25	57	SP AG Cement Cans No Issues	LA-CIN01.001-Cans	Solid	0	0	1	0
S852597	25	57	SP AG Cement Cans No Issues	LA-CIN01.001-Cans	Solid	0	0	1	0
S802878	25	57	SP AG Cement Cans No Issues	LA-CIN01.001-Cans	Solid	0	0	1	0
S802879	25	57	SP AG Cement Cans No Issues	LA-CIN01.001-Cans	Solid	0	0	1	0
S802880	25	57	SP AG Cement Cans No Issues	LA-CIN01.001-Cans	Solid	0	0	1	0
S852588	25	57	SP AG Cement Cans No Issues	LA-CIN01.001-Cans	Solid	0	0	1	0
S852577	25	57	SP AG Cement Cans No Issues	LA-CIN01.001-Cans	Solid	0	0	1	0
S851792	25	57	SP AG Cement Cans No Issues	LA-CIN01.001-Cans	Solid	0	0	1	0
S802944	25	57	SP AG Cement Cans No Issues	LA-CIN01.001-Cans	Solid	0	0	1	0
S803074	25	57	SP AG Cement Cans No Issues	LA-CIN01.001-Cans	Solid	0	0	1	0
S851806	25	57	SP AG Cement Cans No Issues	LA-CIN01.001-Cans	Solid	0	0	1	0
S851841	25	57	SP AG Cement Cans No Issues	LA-CIN01.001-Cans	Solid	0	0	1	0
S851852	25	57	SP AG Cement Cans No Issues	LA-CIN01.001-Cans	Solid	0	0	1	0
S851861	25	57	SP AG Cement Cans No Issues	LA-CIN01.001-Cans	Solid	0	0	1	0
S852576	25	57	SP AG Cement Cans No Issues	LA-CIN01.001-Cans	Solid	0	0	1	0

PKG_ID	WASTE_CD	Solution Package	Description	Waste Stream	Waste Type	Needs Remediation	Remediation Planned	Needs Characterization	CCP In Process
S802952	25	57	SP AG Cement Cans No Issues	LA-CIN01.001-Cans	Solid	0	0	1	0
S852573	25	57	SP AG Cement Cans No Issues	LA-CIN01.001-Cans	Solid	0	0	1	0
S823024	25	57	SP AG Cement Cans No Issues	LA-CIN01.001-Cans	Solid	0	0	1	0
S802937	25	57	SP AG Cement Cans No Issues	LA-CIN01.001-Cans	Solid	0	0	1	0
S834419	25	57	SP AG Cement Cans No Issues	LA-CIN01.001-Cans	Solid	0	0	1	0
S802883	25	57	SP AG Cement Cans No Issues	LA-CIN01.001-Cans	Solid	0	0	1	0
S802882	25	57	SP AG Cement Cans No Issues	LA-CIN01.001-Cans	Solid	0	0	1	0
S851793	25	57	SP AG Cement Cans No Issues	LA-CIN01.001-Cans	Solid	0	0	1	0
S802958	25	57	SP AG Cement Cans No Issues	LA-CIN01.001-Cans	Solid	0	0	1	0
S845376	25	57	SP AG Cement Cans No Issues	LA-CIN01.001-Cans	Solid	0	0	1	0
S846117	25	57	SP AG Cement Cans No Issues	LA-CIN01.001-Cans	Solid	0	0	1	0
S846114	25	57	SP AG Cement Cans No Issues	LA-CIN01.001-Cans	Solid	0	0	1	0
S803613	25	57	SP AG Cement Cans No Issues	LA-CIN01.001-Cans	Solid	0	0	1	0
S803614	25	57	SP AG Cement Cans No Issues	LA-CIN01.001-Cans	Solid	0	0	1	0
S845248	25	57	SP AG Cement Cans No Issues	LA-CIN01.001-Cans	Solid	0	0	1	0
S845261	25	57	SP AG Cement Cans No Issues	LA-CIN01.001-Cans	Solid	0	0	1	0
S845337	25	57	SP AG Cement Cans No Issues	LA-CIN01.001-Cans	Solid	0	0	1	0
S804951	25	57	SP AG Cement Cans No Issues	LA-CIN01.001-Cans	Solid	0	0	1	0
S845345	25	57	SP AG Cement Cans No Issues	LA-CIN01.001-Cans	Solid	0	0	1	0
S846031	25	57	SP AG Cement Cans No Issues	LA-CIN01.001-Cans	Solid	0	0	1	0
S804906	25	57	SP AG Cement Cans No Issues	LA-CIN01.001-Cans	Solid	0	0	1	0
S846130	25	57	SP AG Cement Cans No Issues	LA-CIN01.001-Cans	Solid	0	0	1	0
S804946	25	57	SP AG Cement Cans No Issues	LA-CIN01.001-Cans	Solid	0	0	1	0
S846009	25	57	SP AG Cement Cans No Issues	LA-CIN01.001-Cans	Solid	0	0	1	0
S846087	25	57	SP AG Cement Cans No Issues	LA-CIN01.001-Cans	Solid	0	0	1	0
S846010	25	57	SP AG Cement Cans No Issues	LA-CIN01.001-Cans	Solid	0	0	1	0
S846086	25	57	SP AG Cement Cans No Issues	LA-CIN01.001-Cans	Solid	0	0	1	0
S846085	25	57	SP AG Cement Cans No Issues	LA-CIN01.001-Cans	Solid	0	0	1	0
S846014	25	57	SP AG Cement Cans No Issues	LA-CIN01.001-Cans	Solid	0	0	1	0
S846084	25	57	SP AG Cement Cans No Issues	LA-CIN01.001-Cans	Solid	0	0	1	0
S846055	25	57	SP AG Cement Cans No Issues	LA-CIN01.001-Cans	Solid	0	1	0	0
S846049	25	57	SP AG Cement Cans No Issues	LA-CIN01.001-Cans	Solid	0	0	1	0
S845367	25	57	SP AG Cement Cans No Issues	LA-CIN01.001-Cans	Solid	0	0	1	0
S804981	25	57	SP AG Cement Cans No Issues	LA-CIN01.001-Cans	Solid	0	0	1	0
S845134	25	57	SP AG Cement Cans No Issues	LA-CIN01.001-Cans	Solid	0	0	1	0
S804985	25	57	SP AG Cement Cans No Issues	LA-CIN01.001-Cans	Solid	0	0	1	0
S803093	25	57	SP AG Cement Cans No Issues	LA-CIN01.001-Cans	Solid	0	0	1	0
S803102	25	57	SP AG Cement Cans No Issues	LA-CIN01.001-Cans	Solid	0	0	1	0
S803103	25	57	SP AG Cement Cans No Issues	LA-CIN01.001-Cans	Solid	0	0	1	0
S803148	25	57	SP AG Cement Cans No Issues	LA-CIN01.001-Cans	Solid	0	0	1	0
S803149	25	57	SP AG Cement Cans No Issues	LA-CIN01.001-Cans	Solid	0	0	1	0
S846673	25	57	SP AG Cement Cans No Issues	LA-CIN01.001-Cans	Solid	0	0	1	0
S803155	25	57	SP AG Cement Cans No Issues	LA-CIN01.001-Cans	Solid	0	0	1	0
S846657	25	57	SP AG Cement Cans No Issues	LA-CIN01.001-Cans	Solid	0	0	1	0
S845240	25	57	SP AG Cement Cans No Issues	LA-CIN01.001-Cans	Solid	0	0	1	0
S803195	25	57	SP AG Cement Cans No Issues	LA-CIN01.001-Cans	Solid	0	0	1	0
S846118	25	57	SP AG Cement Cans No Issues	LA-CIN01.001-Cans	Solid	0	0	1	0
S846199	25	57	SP AG Cement Cans No Issues	LA-CIN01.001-Cans	Solid	0	0	1	0
S803202	25	57	SP AG Cement Cans No Issues	LA-CIN01.001-Cans	Solid	0	0	1	0
S803203	25	57	SP AG Cement Cans No Issues	LA-CIN01.001-Cans	Solid	0	0	1	0
S803592	25	57	SP AG Cement Cans No Issues	LA-CIN01.001-Cans	Solid	0	0	1	0

PKG_ID	WASTE_CD	Solution Package	Description	Waste Stream	Waste Type	Needs Remediation	Remediation Planned	Needs Characterization	CCP In Process
S846173	25	57	SP AG Cement Cans No Issues	LA-CIN01.001-Cans	Solid	0	0	1	0
S803606	25	57	SP AG Cement Cans No Issues	LA-CIN01.001-Cans	Solid	0	0	1	0
S846165	25	57	SP AG Cement Cans No Issues	LA-CIN01.001-Cans	Solid	0	0	1	0
S846164	25	57	SP AG Cement Cans No Issues	LA-CIN01.001-Cans	Solid	0	0	1	0
S845218	25	57	SP AG Cement Cans No Issues	LA-CIN01.001-Cans	Solid	0	0	1	0
S803615	25	57	SP AG Cement Cans No Issues	LA-CIN01.001-Cans	Solid	0	0	1	0
S846656	25	57	SP AG Cement Cans No Issues	LA-CIN01.001-Cans	Solid	0	0	1	0
S816768	25	58	SP NDA-Unc (CIN Cans)	LA-CIN01.001-Cans	Solid	0	1	0	0
S851726	25	73	SP SWB-OP Solids	LA-CIN01.001-Cans	Solid	1	1	0	0
S810197	26	05	SP CIN02 Container Issues (#5) (AG Cement-Mono)	LA-CIN02.001	Solid	0	0	0	0
S810194	26	05	SP CIN02 Container Issues (#5) (AG Cement-Mono)	LA-CIN02.001	Solid	0	0	0	0
S810199	26	05	SP CIN02 Container Issues (#5) (AG Cement-Mono)	LA-CIN02.001	Solid	0	0	0	0
S810193	26	05	SP CIN02 Container Issues (#5) (AG Cement-Mono)	LA-CIN02.001	Solid	0	0	0	0
S891031	26	34B	SP Unvented CIN Mon Lead-Lined	LA-CIN01.001-Monoliths Lead-Lined	Solid	1	1	0	0
S822733	26	36	SP AG Cement Cans Container Issues	LA-CIN01.001-Cans	Solid	0	1	0	0
S822582	26	36	SP AG Cement Cans Container Issues	LA-CIN01.001-Cans	Solid	0	1	0	0
S822599	26	36	SP AG Cement Cans Container Issues	LA-CIN01.001-Cans	Solid	0	1	0	0
S822584	26	36	SP AG Cement Cans Container Issues	LA-CIN01.001-Cans	Solid	0	1	0	0
S822861	26	36	SP AG Cement Cans Container Issues	LA-CIN01.001-Cans	Solid	0	1	0	0
S822583	26	36	SP AG Cement Cans Container Issues	LA-CIN01.001-Cans	Solid	0	1	0	0
S822844	26	36	SP AG Cement Cans Container Issues	LA-CIN01.001-Cans	Solid	0	1	0	0
S822726	26	36	SP AG Cement Cans Container Issues	LA-CIN01.001-Cans	Solid	0	1	0	0
S822728	26	36	SP AG Cement Cans Container Issues	LA-CIN01.001-Cans	Solid	0	1	0	0
S822731	26	36	SP AG Cement Cans Container Issues	LA-CIN01.001-Cans	Solid	0	1	0	0
S846100	26	36	SP AG Cement Cans Container Issues	LA-CIN01.001-Cans	Solid	0	1	0	0
S860101	26	36	SP AG Cement Cans Container Issues	LA-CIN01.001-Cans	Solid	0	1	0	0
S851445	26	36	SP AG Cement Cans Container Issues	LA-CIN01.001-Cans	Solid	0	1	0	0
S851444	26	36	SP AG Cement Cans Container Issues	LA-CIN01.001-Cans	Solid	1	1	0	0
S851443	26	36	SP AG Cement Cans Container Issues	LA-CIN01.001-Cans	Solid	0	1	0	0
S851442	26	36	SP AG Cement Cans Container Issues	LA-CIN01.001-Cans	Solid	0	1	0	0
S851440	26	36	SP AG Cement Cans Container Issues	LA-CIN01.001-Cans	Solid	0	1	0	0
S851159	26	36	SP AG Cement Cans Container Issues	LA-CIN01.001-Cans	Solid	0	1	0	0
S846648	26	36	SP AG Cement Cans Container Issues	LA-CIN01.001-Cans	Solid	0	1	0	0
S846196	26	36	SP AG Cement Cans Container Issues	LA-CIN01.001-Cans	Solid	0	1	0	0
S851507	26	36	SP AG Cement Cans Container Issues	LA-CIN01.001-Cans	Solid	0	1	0	0
S846101	26	36	SP AG Cement Cans Container Issues	LA-CIN01.001-Cans	Solid	0	1	0	0
S851512	26	36	SP AG Cement Cans Container Issues	LA-CIN01.001-Cans	Solid	0	0	0	0
S833506	26	36	SP AG Cement Cans Container Issues	LA-CIN01.001-Cans	Solid	0	1	0	0
S845094	26	36	SP AG Cement Cans Container Issues	LA-CIN01.001-Cans	Solid	0	1	0	0
S845068	26	36	SP AG Cement Cans Container Issues	LA-CIN01.001-Cans	Solid	0	1	0	0
S833514	26	36	SP AG Cement Cans Container Issues	LA-CIN01.001-Cans	Solid	0	1	0	0
S845052	26	36	SP AG Cement Cans Container Issues	LA-CIN01.001-Cans	Solid	0	1	0	0
S833547	26	36	SP AG Cement Cans Container Issues	LA-CIN01.001-Cans	Solid	0	1	0	0
S833585	26	36	SP AG Cement Cans Container Issues	LA-CIN01.001-Cans	Solid	0	1	0	0
S844584	26	36	SP AG Cement Cans Container Issues	LA-CIN01.001-Cans	Solid	0	1	0	0
S833595	26	36	SP AG Cement Cans Container Issues	LA-CIN01.001-Cans	Solid	0	1	0	0
S846178	26	36	SP AG Cement Cans Container Issues	LA-CIN01.001-Cans	Solid	0	1	0	0
S855138	26	36	SP AG Cement Cans Container Issues	LA-CIN01.001-Cans	Solid	0	1	0	0
S855876	26	36	SP AG Cement Cans Container Issues	LA-CIN01.001-Cans	Solid	0	1	0	0
S855864	26	36	SP AG Cement Cans Container Issues	LA-CIN01.001-Cans	Solid	0	1	0	0
S855862	26	36	SP AG Cement Cans Container Issues	LA-CIN01.001-Cans	Solid	0	1	0	0

PKG_ID	WASTE_CD	Solution Package	Description	Waste Stream	Waste Type	Needs Remediation	Remediation Planned	Needs Characterization	CCP In Process
S855861	26	36	SP AG Cement Cans Container Issues	LA-CIN01.001-Cans	Solid	0	1	0	0
S855783	26	36	SP AG Cement Cans Container Issues	LA-CIN01.001-Cans	Solid	0	1	0	0
S855781	26	36	SP AG Cement Cans Container Issues	LA-CIN01.001-Cans	Solid	0	1	0	0
S855697	26	36	SP AG Cement Cans Container Issues	LA-CIN01.001-Cans	Solid	0	1	0	0
S853716	26	36	SP AG Cement Cans Container Issues	LA-CIN01.001-Cans	Solid	0	1	0	0
S855269	26	36	SP AG Cement Cans Container Issues	LA-CIN01.001-Cans	Solid	0	1	0	0
S851447	26	36	SP AG Cement Cans Container Issues	LA-CIN01.001-Cans	Solid	1	1	0	0
S855265	26	36	SP AG Cement Cans Container Issues	LA-CIN01.001-Cans	Solid	0	1	0	0
S844324	26	36	SP AG Cement Cans Container Issues	LA-CIN01.001-Cans	Solid	0	1	0	0
S853863	26	36	SP AG Cement Cans Container Issues	LA-CIN01.001-Cans	Solid	0	1	0	0
S834418	26	36	SP AG Cement Cans Container Issues	LA-CIN01.001-Cans	Solid	0	1	0	0
S853026	26	36	SP AG Cement Cans Container Issues	LA-CIN01.001-Cans	Solid	0	1	0	0
S852963	26	36	SP AG Cement Cans Container Issues	LA-CIN01.001-Cans	Solid	0	1	0	0
S852522	26	36	SP AG Cement Cans Container Issues	LA-CIN01.001-Cans	Solid	0	1	0	0
S851636	26	36	SP AG Cement Cans Container Issues	LA-CIN01.001-Cans	Solid	0	1	0	0
S851527	26	36	SP AG Cement Cans Container Issues	LA-CIN01.001-Cans	Solid	0	1	0	0
S851526	26	36	SP AG Cement Cans Container Issues	LA-CIN01.001-Cans	Solid	0	1	0	0
S851525	26	36	SP AG Cement Cans Container Issues	LA-CIN01.001-Cans	Solid	0	1	0	0
S834753	26	36	SP AG Cement Cans Container Issues	LA-CIN01.001-Cans	Solid	0	1	0	0
S842222	26	36	SP AG Cement Cans Container Issues	LA-CIN01.001-Cans	Solid	0	1	0	0
S842553	26	36	SP AG Cement Cans Container Issues	LA-CIN01.001-Cans	Solid	0	1	0	0
S834393	26	36	SP AG Cement Cans Container Issues	LA-CIN01.001-Cans	Solid	0	1	0	0
S842551	26	36	SP AG Cement Cans Container Issues	LA-CIN01.001-Cans	Solid	0	1	0	0
S842550	26	36	SP AG Cement Cans Container Issues	LA-CIN01.001-Cans	Solid	0	1	0	0
S842511	26	36	SP AG Cement Cans Container Issues	LA-CIN01.001-Cans	Solid	0	1	0	0
S842497	26	36	SP AG Cement Cans Container Issues	LA-CIN01.001-Cans	Solid	0	1	0	0
S842495	26	36	SP AG Cement Cans Container Issues	LA-CIN01.001-Cans	Solid	0	1	0	0
S842446	26	36	SP AG Cement Cans Container Issues	LA-CIN01.001-Cans	Solid	0	1	0	0
S834448	26	36	SP AG Cement Cans Container Issues	LA-CIN01.001-Cans	Solid	0	1	0	0
S844354	26	36	SP AG Cement Cans Container Issues	LA-CIN01.001-Cans	Solid	0	1	0	0
S842364	26	36	SP AG Cement Cans Container Issues	LA-CIN01.001-Cans	Solid	0	1	0	0
S843515	26	36	SP AG Cement Cans Container Issues	LA-CIN01.001-Cans	Solid	0	1	0	0
S842214	26	36	SP AG Cement Cans Container Issues	LA-CIN01.001-Cans	Solid	0	1	0	0
S841615	26	36	SP AG Cement Cans Container Issues	LA-CIN01.001-Cans	Solid	0	1	0	0
S841614	26	36	SP AG Cement Cans Container Issues	LA-CIN01.001-Cans	Solid	0	1	0	0
S841325	26	36	SP AG Cement Cans Container Issues	LA-CIN01.001-Cans	Solid	0	1	0	0
S841324	26	36	SP AG Cement Cans Container Issues	LA-CIN01.001-Cans	Solid	0	1	0	0
S834505	26	36	SP AG Cement Cans Container Issues	LA-CIN01.001-Cans	Solid	0	1	0	0
S841288	26	36	SP AG Cement Cans Container Issues	LA-CIN01.001-Cans	Solid	0	1	0	0
S835423	26	36	SP AG Cement Cans Container Issues	LA-CIN01.001-Cans	Solid	0	1	0	0
S835286	26	36	SP AG Cement Cans Container Issues	LA-CIN01.001-Cans	Solid	0	1	0	0
S842443	26	36	SP AG Cement Cans Container Issues	LA-CIN01.001-Cans	Solid	0	1	0	0
S844167	26	36	SP AG Cement Cans Container Issues	LA-CIN01.001-Cans	Solid	0	1	0	0
S855270	26	36	SP AG Cement Cans Container Issues	LA-CIN01.001-Cans	Solid	0	1	0	0
S844323	26	36	SP AG Cement Cans Container Issues	LA-CIN01.001-Cans	Solid	0	1	0	0
S844257	26	36	SP AG Cement Cans Container Issues	LA-CIN01.001-Cans	Solid	0	1	0	0
S844251	26	36	SP AG Cement Cans Container Issues	LA-CIN01.001-Cans	Solid	1	1	0	0
S844226	26	36	SP AG Cement Cans Container Issues	LA-CIN01.001-Cans	Solid	0	1	0	0
S833851	26	36	SP AG Cement Cans Container Issues	LA-CIN01.001-Cans	Solid	0	1	0	0
S833852	26	36	SP AG Cement Cans Container Issues	LA-CIN01.001-Cans	Solid	0	1	0	0
S833853	26	36	SP AG Cement Cans Container Issues	LA-CIN01.001-Cans	Solid	1	1	0	0

PKG_ID	WASTE_CD	Solution Package	Description	Waste Stream	Waste Type	Needs Remediation	Remediation Planned	Needs Characterization	CCP In Process
S844225	26	36	SP AG Cement Cans Container Issues	LA-CIN01.001-Cans	Solid	0	1	0	0
S842559	26	36	SP AG Cement Cans Container Issues	LA-CIN01.001-Cans	Solid	0	1	0	0
S844168	26	36	SP AG Cement Cans Container Issues	LA-CIN01.001-Cans	Solid	0	1	0	0
S843514	26	36	SP AG Cement Cans Container Issues	LA-CIN01.001-Cans	Solid	0	1	0	0
S833878	26	36	SP AG Cement Cans Container Issues	LA-CIN01.001-Cans	Solid	0	1	0	0
S843600	26	36	SP AG Cement Cans Container Issues	LA-CIN01.001-Cans	Solid	0	1	0	0
S843599	26	36	SP AG Cement Cans Container Issues	LA-CIN01.001-Cans	Solid	0	1	0	0
S833898	26	36	SP AG Cement Cans Container Issues	LA-CIN01.001-Cans	Solid	0	1	0	0
S833902	26	36	SP AG Cement Cans Container Issues	LA-CIN01.001-Cans	Solid	0	1	0	0
S833910	26	36	SP AG Cement Cans Container Issues	LA-CIN01.001-Cans	Solid	0	1	0	0
S843518	26	36	SP AG Cement Cans Container Issues	LA-CIN01.001-Cans	Solid	0	1	0	0
S843516	26	36	SP AG Cement Cans Container Issues	LA-CIN01.001-Cans	Solid	0	1	0	0
S834382	26	36	SP AG Cement Cans Container Issues	LA-CIN01.001-Cans	Solid	0	1	0	0
S844338	26	36	SP AG Cement Cans Container Issues	LA-CIN01.001-Cans	Solid	0	1	0	0
S844207	26	36	SP AG Cement Cans Container Issues	LA-CIN01.001-Cans	Solid	0	1	0	0
S863052	26	36	SP AG Cement Cans Container Issues	LA-CIN01.001-Cans	Solid	0	1	0	0
S863801	26	36	SP AG Cement Cans Container Issues	LA-CIN01.001-Cans	Solid	0	1	0	0
S863800	26	36	SP AG Cement Cans Container Issues	LA-CIN01.001-Cans	Solid	0	1	0	0
S863799	26	36	SP AG Cement Cans Container Issues	LA-CIN01.001-Cans	Solid	0	1	0	0
S823288	26	36	SP AG Cement Cans Container Issues	LA-CIN01.001-Cans	Solid	0	1	0	0
S863684	26	36	SP AG Cement Cans Container Issues	LA-CIN01.001-Cans	Solid	0	1	0	0
S863647	26	36	SP AG Cement Cans Container Issues	LA-CIN01.001-Cans	Solid	0	1	0	0
S863645	26	36	SP AG Cement Cans Container Issues	LA-CIN01.001-Cans	Solid	0	1	0	0
S863643	26	36	SP AG Cement Cans Container Issues	LA-CIN01.001-Cans	Solid	0	1	0	0
S863642	26	36	SP AG Cement Cans Container Issues	LA-CIN01.001-Cans	Solid	0	1	0	0
S863055	26	36	SP AG Cement Cans Container Issues	LA-CIN01.001-Cans	Solid	0	1	0	0
S862994	26	36	SP AG Cement Cans Container Issues	LA-CIN01.001-Cans	Solid	0	1	0	0
S863053	26	36	SP AG Cement Cans Container Issues	LA-CIN01.001-Cans	Solid	0	1	0	0
S864201	26	36	SP AG Cement Cans Container Issues	LA-CIN01.001-Cans	Solid	0	1	0	0
S824458	26	36	SP AG Cement Cans Container Issues	LA-CIN01.001-Cans	Solid	0	1	0	0
S863051	26	36	SP AG Cement Cans Container Issues	LA-CIN01.001-Cans	Solid	0	1	0	0
S863050	26	36	SP AG Cement Cans Container Issues	LA-CIN01.001-Cans	Solid	0	1	0	0
S863049	26	36	SP AG Cement Cans Container Issues	LA-CIN01.001-Cans	Solid	0	1	0	0
S863048	26	36	SP AG Cement Cans Container Issues	LA-CIN01.001-Cans	Solid	0	1	0	0
S863046	26	36	SP AG Cement Cans Container Issues	LA-CIN01.001-Cans	Solid	0	1	0	0
S863045	26	36	SP AG Cement Cans Container Issues	LA-CIN01.001-Cans	Solid	0	1	0	0
S863042	26	36	SP AG Cement Cans Container Issues	LA-CIN01.001-Cans	Solid	0	1	0	0
S863038	26	36	SP AG Cement Cans Container Issues	LA-CIN01.001-Cans	Solid	0	1	0	0
S862996	26	36	SP AG Cement Cans Container Issues	LA-CIN01.001-Cans	Solid	0	1	0	0
S863054	26	36	SP AG Cement Cans Container Issues	LA-CIN01.001-Cans	Solid	0	1	0	0
S870103	26	36	SP AG Cement Cans Container Issues	LA-CIN01.001-Cans	Solid	0	1	0	0
S870362	26	36	SP AG Cement Cans Container Issues	LA-CIN01.001-Cans	Solid	0	1	0	0
S870360	26	36	SP AG Cement Cans Container Issues	LA-CIN01.001-Cans	Solid	0	1	0	0
S870335	26	36	SP AG Cement Cans Container Issues	LA-CIN01.001-Cans	Solid	0	1	0	0
S870334	26	36	SP AG Cement Cans Container Issues	LA-CIN01.001-Cans	Solid	0	1	0	0
S870333	26	36	SP AG Cement Cans Container Issues	LA-CIN01.001-Cans	Solid	0	1	0	0
S870331	26	36	SP AG Cement Cans Container Issues	LA-CIN01.001-Cans	Solid	0	1	0	0
S870176	26	36	SP AG Cement Cans Container Issues	LA-CIN01.001-Cans	Solid	0	1	0	0
S870175	26	36	SP AG Cement Cans Container Issues	LA-CIN01.001-Cans	Solid	0	1	0	0
S870174	26	36	SP AG Cement Cans Container Issues	LA-CIN01.001-Cans	Solid	0	1	0	0
S823124	26	36	SP AG Cement Cans Container Issues	LA-CIN01.001-Cans	Solid	0	1	0	0

PKG_ID	WASTE_CD	Solution Package	Description	Waste Stream	Waste Type	Needs Remediation	Remediation Planned	Needs Characterization	CCP In Process
S863802	26	36	SP AG Cement Cans Container Issues	LA-CIN01.001-Cans	Solid	0	1	0	0
S870104	26	36	SP AG Cement Cans Container Issues	LA-CIN01.001-Cans	Solid	0	1	0	0
S863807	26	36	SP AG Cement Cans Container Issues	LA-CIN01.001-Cans	Solid	0	1	0	0
S864723	26	36	SP AG Cement Cans Container Issues	LA-CIN01.001-Cans	Solid	0	1	0	0
S864718	26	36	SP AG Cement Cans Container Issues	LA-CIN01.001-Cans	Solid	0	1	0	0
S864654	26	36	SP AG Cement Cans Container Issues	LA-CIN01.001-Cans	Solid	0	1	0	0
S823184	26	36	SP AG Cement Cans Container Issues	LA-CIN01.001-Cans	Solid	0	1	0	0
S864362	26	36	SP AG Cement Cans Container Issues	LA-CIN01.001-Cans	Solid	0	1	0	0
S864360	26	36	SP AG Cement Cans Container Issues	LA-CIN01.001-Cans	Solid	0	1	0	0
S864328	26	36	SP AG Cement Cans Container Issues	LA-CIN01.001-Cans	Solid	0	1	0	0
S864324	26	36	SP AG Cement Cans Container Issues	LA-CIN01.001-Cans	Solid	0	1	0	0
S864213	26	36	SP AG Cement Cans Container Issues	LA-CIN01.001-Cans	Solid	0	1	0	0
S864202	26	36	SP AG Cement Cans Container Issues	LA-CIN01.001-Cans	Solid	0	1	0	0
S863041	26	36	SP AG Cement Cans Container Issues	LA-CIN01.001-Cans	Solid	0	1	0	0
S870173	26	36	SP AG Cement Cans Container Issues	LA-CIN01.001-Cans	Solid	0	1	0	0
S862891	26	36	SP AG Cement Cans Container Issues	LA-CIN01.001-Cans	Solid	0	1	0	0
S862514	26	36	SP AG Cement Cans Container Issues	LA-CIN01.001-Cans	Solid	0	1	0	0
S862225	26	36	SP AG Cement Cans Container Issues	LA-CIN01.001-Cans	Solid	0	1	0	0
S862090	26	36	SP AG Cement Cans Container Issues	LA-CIN01.001-Cans	Solid	1	1	0	0
S862041	26	36	SP AG Cement Cans Container Issues	LA-CIN01.001-Cans	Solid	0	1	0	0
S862889	26	36	SP AG Cement Cans Container Issues	LA-CIN01.001-Cans	Solid	0	1	0	0
S862513	26	36	SP AG Cement Cans Container Issues	LA-CIN01.001-Cans	Solid	0	1	0	0
S862007	26	36	SP AG Cement Cans Container Issues	LA-CIN01.001-Cans	Solid	0	1	0	0
S862441	26	36	SP AG Cement Cans Container Issues	LA-CIN01.001-Cans	Solid	0	1	0	0
S862401	26	36	SP AG Cement Cans Container Issues	LA-CIN01.001-Cans	Solid	0	1	0	0
S862893	26	36	SP AG Cement Cans Container Issues	LA-CIN01.001-Cans	Solid	0	1	0	0
S862892	26	36	SP AG Cement Cans Container Issues	LA-CIN01.001-Cans	Solid	0	1	0	0
S862435	26	36	SP AG Cement Cans Container Issues	LA-CIN01.001-Cans	Solid	0	1	0	0
S862440	26	36	SP AG Cement Cans Container Issues	LA-CIN01.001-Cans	Solid	0	1	0	0
S855266	26	37	SP Unvented CIN Cans	LA-CIN01.001-Cans	Solid	1	1	0	0
S855780	26	37	SP Unvented CIN Cans	LA-CIN01.001-Cans	Solid	1	1	0	0
S864205	26	37	SP Unvented CIN Cans	LA-CIN01.001-Cans	Solid	1	1	0	0
S855267	26	37	SP Unvented CIN Cans	LA-CIN01.001-Cans	Solid	1	1	0	0
S862228	26	37	SP Unvented CIN Cans	LA-CIN01.001-Cans	Solid	1	1	0	0
S862400	26	37	SP Unvented CIN Cans	LA-CIN01.001-Cans	Solid	1	1	0	0
S864325	26	37	SP Unvented CIN Cans	LA-CIN01.001-Cans	Solid	1	1	0	0
S862385	26	37	SP Unvented CIN Cans	LA-CIN01.001-Cans	Solid	1	1	0	0
S843513	26	37	SP Unvented CIN Cans	LA-CIN01.001-Cans	Solid	1	1	0	0
S855136	26	37	SP Unvented CIN Cans	LA-CIN01.001-Cans	Solid	1	1	0	0
S862230	26	37	SP Unvented CIN Cans	LA-CIN01.001-Cans	Solid	1	1	0	0
S862389	26	37	SP Unvented CIN Cans	LA-CIN01.001-Cans	Solid	1	1	0	0
S870332	26	37	SP Unvented CIN Cans	LA-CIN01.001-Cans	Solid	1	1	0	0
S910178	26	37	SP Unvented CIN Cans	LA-CIN01.001-Cans	Solid	1	1	0	0
S861990	26	37	SP Unvented CIN Cans	LA-CIN01.001-Cans	Solid	1	1	0	0
S841282	26	37	SP Unvented CIN Cans	LA-CIN01.001-Cans	Solid	1	1	0	0
S870361	26	37	SP Unvented CIN Cans	LA-CIN01.001-Cans	Solid	1	1	0	0
S861759	26	37	SP Unvented CIN Cans	LA-CIN01.001-Cans	Solid	1	1	0	0
S861758	26	37	SP Unvented CIN Cans	LA-CIN01.001-Cans	Solid	1	1	0	0
S855782	26	37	SP Unvented CIN Cans	LA-CIN01.001-Cans	Solid	1	1	0	0
S860103	26	37	SP Unvented CIN Cans	LA-CIN01.001-Cans	Solid	1	1	0	0
S864657	26	37	SP Unvented CIN Cans	LA-CIN01.001-Cans	Solid	1	1	0	0

PKG_ID	WASTE_CD	Solution Package	Description	Waste Stream	Waste Type	Needs Remediation	Remediation Planned	Needs Characterization	CCP In Process
S860099	26	37	SP Unvented CIN Cans	LA-CIN01.001-Cans	Solid	1	1	0	0
S855918	26	37	SP Unvented CIN Cans	LA-CIN01.001-Cans	Solid	1	1	0	0
S862010	26	37	SP Unvented CIN Cans	LA-CIN01.001-Cans	Solid	1	1	0	0
S853864	26	37	SP Unvented CIN Cans	LA-CIN01.001-Cans	Solid	1	1	0	0
S865299	26	37	SP Unvented CIN Cans	LA-CIN01.001-Cans	Solid	1	1	0	0
S863805	26	37	SP Unvented CIN Cans	LA-CIN01.001-Cans	Solid	1	1	0	0
S862229	26	37	SP Unvented CIN Cans	LA-CIN01.001-Cans	Solid	1	1	0	0
S860197	26	37	SP Unvented CIN Cans	LA-CIN01.001-Cans	Solid	1	1	0	0
S863037	26	37	SP Unvented CIN Cans	LA-CIN01.001-Cans	Solid	1	1	0	0
S854593	26	37	SP Unvented CIN Cans	LA-CIN01.001-Cans	Solid	1	1	0	0
S863047	26	37	SP Unvented CIN Cans	LA-CIN01.001-Cans	Solid	1	1	0	0
S845138	26	37	SP Unvented CIN Cans	LA-CIN01.001-Cans	Solid	1	1	0	0
S862888	26	37	SP Unvented CIN Cans	LA-CIN01.001-Cans	Solid	1	1	0	0
S855639	26	37	SP Unvented CIN Cans	LA-CIN01.001-Cans	Solid	1	1	0	0
S862890	26	37	SP Unvented CIN Cans	LA-CIN01.001-Cans	Solid	1	1	0	0
S862516	26	37	SP Unvented CIN Cans	LA-CIN01.001-Cans	Solid	1	1	0	0
S851158	26	37	SP Unvented CIN Cans	LA-CIN01.001-Cans	Solid	1	1	0	0
S852523	26	37	SP Unvented CIN Cans	LA-CIN01.001-Cans	Solid	1	1	0	0
S851411	26	37	SP Unvented CIN Cans	LA-CIN01.001-Cans	Solid	1	1	0	0
S851437	26	37	SP Unvented CIN Cans	LA-CIN01.001-Cans	Solid	1	1	0	0
S851438	26	37	SP Unvented CIN Cans	LA-CIN01.001-Cans	Solid	1	1	0	0
S851439	26	37	SP Unvented CIN Cans	LA-CIN01.001-Cans	Solid	1	1	0	0
S863003	26	37	SP Unvented CIN Cans	LA-CIN01.001-Cans	Solid	1	1	0	0
S851441	26	37	SP Unvented CIN Cans	LA-CIN01.001-Cans	Solid	1	1	0	0
S862981	26	37	SP Unvented CIN Cans	LA-CIN01.001-Cans	Solid	1	1	0	0
S861992	26	37	SP Unvented CIN Cans	LA-CIN01.001-Cans	Solid	1	1	0	0
S852972	26	37	SP Unvented CIN Cans	LA-CIN01.001-Cans	Solid	1	1	0	0
S855135	26	37	SP Unvented CIN Cans	LA-CIN01.001-Cans	Solid	1	1	0	0
S846167	26	37	SP Unvented CIN Cans	LA-CIN01.001-Cans	Solid	1	1	0	0
S854586	26	37	SP Unvented CIN Cans	LA-CIN01.001-Cans	Solid	1	1	0	0
S862977	26	37	SP Unvented CIN Cans	LA-CIN01.001-Cans	Solid	1	1	0	0
S863798	26	37	SP Unvented CIN Cans	LA-CIN01.001-Cans	Solid	1	1	0	0
S863735	26	37	SP Unvented CIN Cans	LA-CIN01.001-Cans	Solid	1	1	0	0
S862880	26	37	SP Unvented CIN Cans	LA-CIN01.001-Cans	Solid	1	1	0	0
S853719	26	37	SP Unvented CIN Cans	LA-CIN01.001-Cans	Solid	1	1	0	0
S863803	26	37	SP Unvented CIN Cans	LA-CIN01.001-Cans	Solid	1	1	0	0
S852971	26	37	SP Unvented CIN Cans	LA-CIN01.001-Cans	Solid	1	1	0	0
S852966	26	37	SP Unvented CIN Cans	LA-CIN01.001-Cans	Solid	1	1	0	0
S844654	26	37	SP Unvented CIN Cans	LA-CIN01.001-Cans	Solid	1	1	0	0
S852960	26	37	SP Unvented CIN Cans	LA-CIN01.001-Cans	Solid	1	1	0	0
S845046	26	37	SP Unvented CIN Cans	LA-CIN01.001-Cans	Solid	1	1	0	0
S852959	26	37	SP Unvented CIN Cans	LA-CIN01.001-Cans	Solid	1	1	0	0
S852525	26	37	SP Unvented CIN Cans	LA-CIN01.001-Cans	Solid	1	1	0	0
S853749	26	37	SP Unvented CIN Cans	LA-CIN01.001-Cans	Solid	1	1	0	0
S824460	26	37	SP Unvented CIN Cans	LA-CIN01.001-Cans	Solid	1	1	0	0
S823063	26	37	SP Unvented CIN Cans	LA-CIN01.001-Cans	Solid	1	1	0	0
S823064	26	37	SP Unvented CIN Cans	LA-CIN01.001-Cans	Solid	1	1	0	0
S823062	26	37	SP Unvented CIN Cans	LA-CIN01.001-Cans	Solid	1	1	0	0
S823061	26	37	SP Unvented CIN Cans	LA-CIN01.001-Cans	Solid	1	1	0	0
S822729	26	37	SP Unvented CIN Cans	LA-CIN01.001-Cans	Solid	1	1	0	0
S823065	26	37	SP Unvented CIN Cans	LA-CIN01.001-Cans	Solid	1	1	0	0

PKG_ID	WASTE_CD	Solution Package	Description	Waste Stream	Waste Type	Needs Remediation	Remediation Planned	Needs Characterization	CCP In Process
S910179	26	37	SP Unvented CIN Cans	LA-CIN01.001-Cans	Solid	1	1	0	0
S818435	26	37	SP Unvented CIN Cans	LA-CIN01.001-Cans	Solid	1	1	0	0
S824182	26	37	SP Unvented CIN Cans	LA-CIN01.001-Cans	Solid	1	1	0	0
S852965	26	57	SP AG Cement Cans No Issues	LA-CIN01.001-Cans	Solid	0	0	1	0
S823125	26	57	SP AG Cement Cans No Issues	LA-CIN01.001-Cans	Solid	0	0	1	0
S852973	26	57	SP AG Cement Cans No Issues	LA-CIN01.001-Cans	Solid	0	0	1	0
S870105	26	57	SP AG Cement Cans No Issues	LA-CIN01.001-Cans	Solid	0	0	1	0
S862973	26	57	SP AG Cement Cans No Issues	LA-CIN01.001-Cans	Solid	0	0	1	0
S862393	26	57	SP AG Cement Cans No Issues	LA-CIN01.001-Cans	Solid	0	0	1	0
S852968	26	57	SP AG Cement Cans No Issues	LA-CIN01.001-Cans	Solid	0	0	1	0
S862475	26	57	SP AG Cement Cans No Issues	LA-CIN01.001-Cans	Solid	0	0	1	0
S862974	26	57	SP AG Cement Cans No Issues	LA-CIN01.001-Cans	Solid	0	0	1	0
S862894	26	57	SP AG Cement Cans No Issues	LA-CIN01.001-Cans	Solid	0	0	1	0
S862392	26	57	SP AG Cement Cans No Issues	LA-CIN01.001-Cans	Solid	0	0	1	0
S852964	26	57	SP AG Cement Cans No Issues	LA-CIN01.001-Cans	Solid	0	0	1	0
S862975	26	57	SP AG Cement Cans No Issues	LA-CIN01.001-Cans	Solid	0	0	1	0
S852962	26	57	SP AG Cement Cans No Issues	LA-CIN01.001-Cans	Solid	0	0	1	0
S852961	26	57	SP AG Cement Cans No Issues	LA-CIN01.001-Cans	Solid	0	0	1	0
S862976	26	57	SP AG Cement Cans No Issues	LA-CIN01.001-Cans	Solid	0	0	1	0
S862391	26	57	SP AG Cement Cans No Issues	LA-CIN01.001-Cans	Solid	0	0	1	0
S852967	26	57	SP AG Cement Cans No Issues	LA-CIN01.001-Cans	Solid	0	0	1	0
S862444	26	57	SP AG Cement Cans No Issues	LA-CIN01.001-Cans	Solid	0	0	1	0
S862438	26	57	SP AG Cement Cans No Issues	LA-CIN01.001-Cans	Solid	0	0	1	0
S862439	26	57	SP AG Cement Cans No Issues	LA-CIN01.001-Cans	Solid	0	0	1	0
S862442	26	57	SP AG Cement Cans No Issues	LA-CIN01.001-Cans	Solid	0	0	1	0
S862436	26	57	SP AG Cement Cans No Issues	LA-CIN01.001-Cans	Solid	0	0	1	0
S822586	26	57	SP AG Cement Cans No Issues	LA-CIN01.001-Cans	Solid	0	0	1	0
S862443	26	57	SP AG Cement Cans No Issues	LA-CIN01.001-Cans	Solid	0	0	1	0
S853555	26	57	SP AG Cement Cans No Issues	LA-CIN01.001-Cans	Solid	0	0	1	0
S862895	26	57	SP AG Cement Cans No Issues	LA-CIN01.001-Cans	Solid	0	0	1	0
S853554	26	57	SP AG Cement Cans No Issues	LA-CIN01.001-Cans	Solid	0	0	1	0
S853750	26	57	SP AG Cement Cans No Issues	LA-CIN01.001-Cans	Solid	0	0	1	0
S862462	26	57	SP AG Cement Cans No Issues	LA-CIN01.001-Cans	Solid	0	0	1	0
S862991	26	57	SP AG Cement Cans No Issues	LA-CIN01.001-Cans	Solid	0	0	1	0
S853747	26	57	SP AG Cement Cans No Issues	LA-CIN01.001-Cans	Solid	0	0	1	0
S852958	26	57	SP AG Cement Cans No Issues	LA-CIN01.001-Cans	Solid	0	0	1	0
S862879	26	57	SP AG Cement Cans No Issues	LA-CIN01.001-Cans	Solid	0	0	1	0
S853748	26	57	SP AG Cement Cans No Issues	LA-CIN01.001-Cans	Solid	0	0	1	0
S862437	26	57	SP AG Cement Cans No Issues	LA-CIN01.001-Cans	Solid	0	0	1	0
S822585	26	57	SP AG Cement Cans No Issues	LA-CIN01.001-Cans	Solid	0	0	1	0
S863700	26	57	SP AG Cement Cans No Issues	LA-CIN01.001-Cans	Solid	0	0	1	0
S852916	26	57	SP AG Cement Cans No Issues	LA-CIN01.001-Cans	Solid	0	0	1	0
S822740	26	57	SP AG Cement Cans No Issues	LA-CIN01.001-Cans	Solid	0	0	1	0
S851446	26	57	SP AG Cement Cans No Issues	LA-CIN01.001-Cans	Solid	0	0	1	0
S863641	26	57	SP AG Cement Cans No Issues	LA-CIN01.001-Cans	Solid	0	0	1	0
S863644	26	57	SP AG Cement Cans No Issues	LA-CIN01.001-Cans	Solid	0	0	1	0
S863646	26	57	SP AG Cement Cans No Issues	LA-CIN01.001-Cans	Solid	0	0	1	0
S863683	26	57	SP AG Cement Cans No Issues	LA-CIN01.001-Cans	Solid	0	0	1	0
S860020	26	57	SP AG Cement Cans No Issues	LA-CIN01.001-Cans	Solid	0	0	1	0
S822732	26	57	SP AG Cement Cans No Issues	LA-CIN01.001-Cans	Solid	0	0	1	0
S855677	26	57	SP AG Cement Cans No Issues	LA-CIN01.001-Cans	Solid	0	0	1	0

PKG_ID	WASTE_CD	Solution Package	Description	Waste Stream	Waste Type	Needs Remediation	Remediation Planned	Needs Characterization	CCP In Process
S824468	26	57	SP AG Cement Cans No Issues	LA-CIN01.001-Cans	Solid	0	0	1	0
S865301	26	57	SP AG Cement Cans No Issues	LA-CIN01.001-Cans	Solid	0	0	1	0
S865300	26	57	SP AG Cement Cans No Issues	LA-CIN01.001-Cans	Solid	0	0	1	0
S823127	26	57	SP AG Cement Cans No Issues	LA-CIN01.001-Cans	Solid	0	0	1	0
S863732	26	57	SP AG Cement Cans No Issues	LA-CIN01.001-Cans	Solid	0	0	1	0
S863733	26	57	SP AG Cement Cans No Issues	LA-CIN01.001-Cans	Solid	0	0	1	0
S863734	26	57	SP AG Cement Cans No Issues	LA-CIN01.001-Cans	Solid	0	0	1	0
S863738	26	57	SP AG Cement Cans No Issues	LA-CIN01.001-Cans	Solid	0	0	1	0
S864724	26	57	SP AG Cement Cans No Issues	LA-CIN01.001-Cans	Solid	0	0	1	0
S863698	26	57	SP AG Cement Cans No Issues	LA-CIN01.001-Cans	Solid	0	0	1	0
S863035	26	57	SP AG Cement Cans No Issues	LA-CIN01.001-Cans	Solid	0	0	1	0
S862979	26	57	SP AG Cement Cans No Issues	LA-CIN01.001-Cans	Solid	0	0	1	0
S862390	26	57	SP AG Cement Cans No Issues	LA-CIN01.001-Cans	Solid	0	0	1	0
S862980	26	57	SP AG Cement Cans No Issues	LA-CIN01.001-Cans	Solid	0	0	1	0
S862382	26	57	SP AG Cement Cans No Issues	LA-CIN01.001-Cans	Solid	0	0	1	0
S862992	26	57	SP AG Cement Cans No Issues	LA-CIN01.001-Cans	Solid	0	0	1	0
S862993	26	57	SP AG Cement Cans No Issues	LA-CIN01.001-Cans	Solid	0	0	1	0
S862995	26	57	SP AG Cement Cans No Issues	LA-CIN01.001-Cans	Solid	0	0	1	0
S863002	26	57	SP AG Cement Cans No Issues	LA-CIN01.001-Cans	Solid	0	0	1	0
S822739	26	57	SP AG Cement Cans No Issues	LA-CIN01.001-Cans	Solid	0	0	1	0
S823126	26	57	SP AG Cement Cans No Issues	LA-CIN01.001-Cans	Solid	0	0	1	0
S862978	26	57	SP AG Cement Cans No Issues	LA-CIN01.001-Cans	Solid	0	0	1	0
S852521	26	57	SP AG Cement Cans No Issues	LA-CIN01.001-Cans	Solid	0	0	1	0
S863036	26	57	SP AG Cement Cans No Issues	LA-CIN01.001-Cans	Solid	0	0	1	0
S852505	26	57	SP AG Cement Cans No Issues	LA-CIN01.001-Cans	Solid	0	0	1	0
S822725	26	57	SP AG Cement Cans No Issues	LA-CIN01.001-Cans	Solid	0	0	1	0
S863039	26	57	SP AG Cement Cans No Issues	LA-CIN01.001-Cans	Solid	0	0	1	0
S863040	26	57	SP AG Cement Cans No Issues	LA-CIN01.001-Cans	Solid	0	0	1	0
S822727	26	57	SP AG Cement Cans No Issues	LA-CIN01.001-Cans	Solid	0	0	1	0
S822730	26	57	SP AG Cement Cans No Issues	LA-CIN01.001-Cans	Solid	0	0	1	0
S852524	26	57	SP AG Cement Cans No Issues	LA-CIN01.001-Cans	Solid	0	0	1	0
S861827	26	57	SP AG Cement Cans No Issues	LA-CIN01.001-Cans	Solid	0	0	1	0
S860105	26	57	SP AG Cement Cans No Issues	LA-CIN01.001-Cans	Solid	0	0	1	0
S855863	26	57	SP AG Cement Cans No Issues	LA-CIN01.001-Cans	Solid	0	0	1	0
S860106	26	57	SP AG Cement Cans No Issues	LA-CIN01.001-Cans	Solid	0	0	1	0
S832146	26	57	SP AG Cement Cans No Issues	LA-CIN01.001-Cans	Solid	0	0	1	0
S823016	26	57	SP AG Cement Cans No Issues	LA-CIN01.001-Cans	Solid	0	0	1	0
S855785	26	57	SP AG Cement Cans No Issues	LA-CIN01.001-Cans	Solid	0	0	1	0
S860196	26	57	SP AG Cement Cans No Issues	LA-CIN01.001-Cans	Solid	0	0	1	0
S862387	26	57	SP AG Cement Cans No Issues	LA-CIN01.001-Cans	Solid	0	0	1	0
S818449	26	57	SP AG Cement Cans No Issues	LA-CIN01.001-Cans	Solid	0	0	1	0
S855867	26	57	SP AG Cement Cans No Issues	LA-CIN01.001-Cans	Solid	0	0	1	0
S861957	26	57	SP AG Cement Cans No Issues	LA-CIN01.001-Cans	Solid	0	0	1	0
S855638	26	57	SP AG Cement Cans No Issues	LA-CIN01.001-Cans	Solid	0	0	1	0
S855637	26	57	SP AG Cement Cans No Issues	LA-CIN01.001-Cans	Solid	0	0	1	0
S861958	26	57	SP AG Cement Cans No Issues	LA-CIN01.001-Cans	Solid	0	0	1	0
S861959	26	57	SP AG Cement Cans No Issues	LA-CIN01.001-Cans	Solid	0	0	1	0
S855617	26	57	SP AG Cement Cans No Issues	LA-CIN01.001-Cans	Solid	0	0	1	0
S855616	26	57	SP AG Cement Cans No Issues	LA-CIN01.001-Cans	Solid	0	0	1	0
S855615	26	57	SP AG Cement Cans No Issues	LA-CIN01.001-Cans	Solid	0	0	1	0
S861757	26	57	SP AG Cement Cans No Issues	LA-CIN01.001-Cans	Solid	0	0	1	0

PKG_ID	WASTE_CD	Solution Package	Description	Waste Stream	Waste Type	Needs Remediation	Remediation Planned	Needs Characterization	CCP In Process
S855913	26	57	SP AG Cement Cans No Issues	LA-CIN01.001-Cans	Solid	0	0	1	0
S860019	26	57	SP AG Cement Cans No Issues	LA-CIN01.001-Cans	Solid	0	0	1	0
S860018	26	57	SP AG Cement Cans No Issues	LA-CIN01.001-Cans	Solid	0	0	1	0
S834593	26	57	SP AG Cement Cans No Issues	LA-CIN01.001-Cans	Solid	0	0	1	0
S860098	26	57	SP AG Cement Cans No Issues	LA-CIN01.001-Cans	Solid	0	0	1	0
S855919	26	57	SP AG Cement Cans No Issues	LA-CIN01.001-Cans	Solid	0	0	1	0
S860100	26	57	SP AG Cement Cans No Issues	LA-CIN01.001-Cans	Solid	0	0	1	0
S855917	26	57	SP AG Cement Cans No Issues	LA-CIN01.001-Cans	Solid	0	0	1	0
S855916	26	57	SP AG Cement Cans No Issues	LA-CIN01.001-Cans	Solid	0	0	1	0
S855865	26	57	SP AG Cement Cans No Issues	LA-CIN01.001-Cans	Solid	0	0	1	0
S855914	26	57	SP AG Cement Cans No Issues	LA-CIN01.001-Cans	Solid	0	0	1	0
S855866	26	57	SP AG Cement Cans No Issues	LA-CIN01.001-Cans	Solid	0	0	1	0
S855912	26	57	SP AG Cement Cans No Issues	LA-CIN01.001-Cans	Solid	0	0	1	0
S855911	26	57	SP AG Cement Cans No Issues	LA-CIN01.001-Cans	Solid	0	0	1	0
S860102	26	57	SP AG Cement Cans No Issues	LA-CIN01.001-Cans	Solid	0	0	1	0
S855879	26	57	SP AG Cement Cans No Issues	LA-CIN01.001-Cans	Solid	0	0	1	0
S855878	26	57	SP AG Cement Cans No Issues	LA-CIN01.001-Cans	Solid	0	0	1	0
S855877	26	57	SP AG Cement Cans No Issues	LA-CIN01.001-Cans	Solid	0	0	1	0
S860104	26	57	SP AG Cement Cans No Issues	LA-CIN01.001-Cans	Solid	0	0	1	0
S861961	26	57	SP AG Cement Cans No Issues	LA-CIN01.001-Cans	Solid	0	0	1	0
S855915	26	57	SP AG Cement Cans No Issues	LA-CIN01.001-Cans	Solid	0	0	1	0
S822580	26	57	SP AG Cement Cans No Issues	LA-CIN01.001-Cans	Solid	0	0	1	0
S855614	26	57	SP AG Cement Cans No Issues	LA-CIN01.001-Cans	Solid	0	0	1	0
S855137	26	57	SP AG Cement Cans No Issues	LA-CIN01.001-Cans	Solid	0	0	1	0
S862087	26	57	SP AG Cement Cans No Issues	LA-CIN01.001-Cans	Solid	0	0	1	0
S862088	26	57	SP AG Cement Cans No Issues	LA-CIN01.001-Cans	Solid	0	0	1	0
S862089	26	57	SP AG Cement Cans No Issues	LA-CIN01.001-Cans	Solid	0	0	1	0
S855125	26	57	SP AG Cement Cans No Issues	LA-CIN01.001-Cans	Solid	0	0	1	0
S855124	26	57	SP AG Cement Cans No Issues	LA-CIN01.001-Cans	Solid	0	0	1	0
S855123	26	57	SP AG Cement Cans No Issues	LA-CIN01.001-Cans	Solid	0	0	1	0
S871870	26	57	SP AG Cement Cans No Issues	LA-CIN01.001-Cans	Solid	0	0	1	0
S862226	26	57	SP AG Cement Cans No Issues	LA-CIN01.001-Cans	Solid	0	0	1	0
S862009	26	57	SP AG Cement Cans No Issues	LA-CIN01.001-Cans	Solid	0	0	1	0
S853895	26	57	SP AG Cement Cans No Issues	LA-CIN01.001-Cans	Solid	0	0	1	0
S853894	26	57	SP AG Cement Cans No Issues	LA-CIN01.001-Cans	Solid	0	0	1	0
S862231	26	57	SP AG Cement Cans No Issues	LA-CIN01.001-Cans	Solid	0	0	1	0
S853865	26	57	SP AG Cement Cans No Issues	LA-CIN01.001-Cans	Solid	0	0	1	0
S862232	26	57	SP AG Cement Cans No Issues	LA-CIN01.001-Cans	Solid	0	0	1	0
S863699	26	57	SP AG Cement Cans No Issues	LA-CIN01.001-Cans	Solid	0	0	1	0
S862386	26	57	SP AG Cement Cans No Issues	LA-CIN01.001-Cans	Solid	0	0	1	0
S822858	26	57	SP AG Cement Cans No Issues	LA-CIN01.001-Cans	Solid	0	0	1	0
S862224	26	57	SP AG Cement Cans No Issues	LA-CIN01.001-Cans	Solid	0	0	1	0
S862008	26	57	SP AG Cement Cans No Issues	LA-CIN01.001-Cans	Solid	0	0	1	0
S862388	26	57	SP AG Cement Cans No Issues	LA-CIN01.001-Cans	Solid	0	0	1	0
S861962	26	57	SP AG Cement Cans No Issues	LA-CIN01.001-Cans	Solid	0	0	1	0
S861963	26	57	SP AG Cement Cans No Issues	LA-CIN01.001-Cans	Solid	0	0	1	0
S861964	26	57	SP AG Cement Cans No Issues	LA-CIN01.001-Cans	Solid	0	0	1	0
S855272	26	57	SP AG Cement Cans No Issues	LA-CIN01.001-Cans	Solid	0	0	1	0
S861991	26	57	SP AG Cement Cans No Issues	LA-CIN01.001-Cans	Solid	0	0	1	0
S822541	26	57	SP AG Cement Cans No Issues	LA-CIN01.001-Cans	Solid	0	0	1	0
S855268	26	57	SP AG Cement Cans No Issues	LA-CIN01.001-Cans	Solid	0	0	1	0

PKG_ID	WASTE_CD	Solution Package	Description	Waste Stream	Waste Type	Needs Remediation	Remediation Planned	Needs Characterization	CCP In Process
S862042	26	57	SP AG Cement Cans No Issues	LA-CIN01.001-Cans	Solid	0	0	1	0
S822542	26	57	SP AG Cement Cans No Issues	LA-CIN01.001-Cans	Solid	0	0	1	0
S861960	26	57	SP AG Cement Cans No Issues	LA-CIN01.001-Cans	Solid	0	0	1	0
S855226	26	57	SP AG Cement Cans No Issues	LA-CIN01.001-Cans	Solid	0	0	1	0
S855225	26	57	SP AG Cement Cans No Issues	LA-CIN01.001-Cans	Solid	0	0	1	0
S855224	26	57	SP AG Cement Cans No Issues	LA-CIN01.001-Cans	Solid	0	0	1	0
S855223	26	57	SP AG Cement Cans No Issues	LA-CIN01.001-Cans	Solid	0	0	1	0
S855222	26	57	SP AG Cement Cans No Issues	LA-CIN01.001-Cans	Solid	0	0	1	0
S855221	26	57	SP AG Cement Cans No Issues	LA-CIN01.001-Cans	Solid	0	0	1	0
S855220	26	57	SP AG Cement Cans No Issues	LA-CIN01.001-Cans	Solid	0	0	1	0
S855219	26	57	SP AG Cement Cans No Issues	LA-CIN01.001-Cans	Solid	0	0	1	0
S861993	26	57	SP AG Cement Cans No Issues	LA-CIN01.001-Cans	Solid	0	0	1	0
S842235	26	57	SP AG Cement Cans No Issues	LA-CIN01.001-Cans	Solid	0	0	1	0
S842565	26	57	SP AG Cement Cans No Issues	LA-CIN01.001-Cans	Solid	0	0	1	0
S842380	26	57	SP AG Cement Cans No Issues	LA-CIN01.001-Cans	Solid	0	0	1	0
S842379	26	57	SP AG Cement Cans No Issues	LA-CIN01.001-Cans	Solid	0	0	1	0
S842378	26	57	SP AG Cement Cans No Issues	LA-CIN01.001-Cans	Solid	0	0	1	0
S834449	26	57	SP AG Cement Cans No Issues	LA-CIN01.001-Cans	Solid	0	0	1	0
S842345	26	57	SP AG Cement Cans No Issues	LA-CIN01.001-Cans	Solid	0	0	1	0
S864639	26	57	SP AG Cement Cans No Issues	LA-CIN01.001-Cans	Solid	0	0	1	0
S842239	26	57	SP AG Cement Cans No Issues	LA-CIN01.001-Cans	Solid	0	0	1	0
S842238	26	57	SP AG Cement Cans No Issues	LA-CIN01.001-Cans	Solid	0	0	1	0
S842383	26	57	SP AG Cement Cans No Issues	LA-CIN01.001-Cans	Solid	0	0	1	0
S842236	26	57	SP AG Cement Cans No Issues	LA-CIN01.001-Cans	Solid	0	0	1	0
S842387	26	57	SP AG Cement Cans No Issues	LA-CIN01.001-Cans	Solid	0	0	1	0
S864640	26	57	SP AG Cement Cans No Issues	LA-CIN01.001-Cans	Solid	0	0	1	0
S842233	26	57	SP AG Cement Cans No Issues	LA-CIN01.001-Cans	Solid	0	0	1	0
S842232	26	57	SP AG Cement Cans No Issues	LA-CIN01.001-Cans	Solid	0	0	1	0
S842223	26	57	SP AG Cement Cans No Issues	LA-CIN01.001-Cans	Solid	0	0	1	0
S834472	26	57	SP AG Cement Cans No Issues	LA-CIN01.001-Cans	Solid	0	0	1	0
S842215	26	57	SP AG Cement Cans No Issues	LA-CIN01.001-Cans	Solid	0	0	1	0
S834473	26	57	SP AG Cement Cans No Issues	LA-CIN01.001-Cans	Solid	0	0	1	0
S864647	26	57	SP AG Cement Cans No Issues	LA-CIN01.001-Cans	Solid	0	0	1	0
S864650	26	57	SP AG Cement Cans No Issues	LA-CIN01.001-Cans	Solid	0	0	1	0
S842237	26	57	SP AG Cement Cans No Issues	LA-CIN01.001-Cans	Solid	0	0	1	0
S834403	26	57	SP AG Cement Cans No Issues	LA-CIN01.001-Cans	Solid	0	0	1	0
S834387	26	57	SP AG Cement Cans No Issues	LA-CIN01.001-Cans	Solid	0	0	1	0
S834388	26	57	SP AG Cement Cans No Issues	LA-CIN01.001-Cans	Solid	0	0	1	0
S822859	26	57	SP AG Cement Cans No Issues	LA-CIN01.001-Cans	Solid	0	0	1	0
S834399	26	57	SP AG Cement Cans No Issues	LA-CIN01.001-Cans	Solid	0	0	1	0
S863685	26	57	SP AG Cement Cans No Issues	LA-CIN01.001-Cans	Solid	0	0	1	0
S864715	26	57	SP AG Cement Cans No Issues	LA-CIN01.001-Cans	Solid	0	0	1	0
S834400	26	57	SP AG Cement Cans No Issues	LA-CIN01.001-Cans	Solid	0	0	1	0
S842509	26	57	SP AG Cement Cans No Issues	LA-CIN01.001-Cans	Solid	0	0	1	0
S842499	26	57	SP AG Cement Cans No Issues	LA-CIN01.001-Cans	Solid	0	0	1	0
S842381	26	57	SP AG Cement Cans No Issues	LA-CIN01.001-Cans	Solid	0	0	1	0
S842496	26	57	SP AG Cement Cans No Issues	LA-CIN01.001-Cans	Solid	0	0	1	0
S834496	26	57	SP AG Cement Cans No Issues	LA-CIN01.001-Cans	Solid	0	0	1	0
S842493	26	57	SP AG Cement Cans No Issues	LA-CIN01.001-Cans	Solid	0	0	1	0
S864637	26	57	SP AG Cement Cans No Issues	LA-CIN01.001-Cans	Solid	0	0	1	0
S842451	26	57	SP AG Cement Cans No Issues	LA-CIN01.001-Cans	Solid	0	0	1	0

PKG_ID	WASTE_CD	Solution Package	Description	Waste Stream	Waste Type	Needs Remediation	Remediation Planned	Needs Characterization	CCP In Process
S842450	26	57	SP AG Cement Cans No Issues	LA-CIN01.001-Cans	Solid	0	0	1	0
S842449	26	57	SP AG Cement Cans No Issues	LA-CIN01.001-Cans	Solid	0	0	1	0
S864638	26	57	SP AG Cement Cans No Issues	LA-CIN01.001-Cans	Solid	0	0	1	0
S842445	26	57	SP AG Cement Cans No Issues	LA-CIN01.001-Cans	Solid	0	0	1	0
S842444	26	57	SP AG Cement Cans No Issues	LA-CIN01.001-Cans	Solid	0	0	1	0
S842411	26	57	SP AG Cement Cans No Issues	LA-CIN01.001-Cans	Solid	0	0	1	0
S834401	26	57	SP AG Cement Cans No Issues	LA-CIN01.001-Cans	Solid	0	0	1	0
S834662	26	57	SP AG Cement Cans No Issues	LA-CIN01.001-Cans	Solid	0	0	1	0
S834575	26	57	SP AG Cement Cans No Issues	LA-CIN01.001-Cans	Solid	0	0	1	0
S864659	26	57	SP AG Cement Cans No Issues	LA-CIN01.001-Cans	Solid	0	0	1	0
S835282	26	57	SP AG Cement Cans No Issues	LA-CIN01.001-Cans	Solid	0	0	1	0
S834763	26	57	SP AG Cement Cans No Issues	LA-CIN01.001-Cans	Solid	0	0	1	0
S834758	26	57	SP AG Cement Cans No Issues	LA-CIN01.001-Cans	Solid	0	0	1	0
S834754	26	57	SP AG Cement Cans No Issues	LA-CIN01.001-Cans	Solid	0	0	1	0
S834576	26	57	SP AG Cement Cans No Issues	LA-CIN01.001-Cans	Solid	0	0	1	0
S834752	26	57	SP AG Cement Cans No Issues	LA-CIN01.001-Cans	Solid	0	0	1	0
S834737	26	57	SP AG Cement Cans No Issues	LA-CIN01.001-Cans	Solid	0	0	1	0
S841618	26	57	SP AG Cement Cans No Issues	LA-CIN01.001-Cans	Solid	0	0	1	0
S834671	26	57	SP AG Cement Cans No Issues	LA-CIN01.001-Cans	Solid	0	0	1	0
S835388	26	57	SP AG Cement Cans No Issues	LA-CIN01.001-Cans	Solid	0	0	1	0
S834654	26	57	SP AG Cement Cans No Issues	LA-CIN01.001-Cans	Solid	0	0	1	0
S834649	26	57	SP AG Cement Cans No Issues	LA-CIN01.001-Cans	Solid	0	0	1	0
S834636	26	57	SP AG Cement Cans No Issues	LA-CIN01.001-Cans	Solid	0	0	1	0
S834635	26	57	SP AG Cement Cans No Issues	LA-CIN01.001-Cans	Solid	0	0	1	0
S834634	26	57	SP AG Cement Cans No Issues	LA-CIN01.001-Cans	Solid	0	0	1	0
S864660	26	57	SP AG Cement Cans No Issues	LA-CIN01.001-Cans	Solid	0	0	1	0
S834596	26	57	SP AG Cement Cans No Issues	LA-CIN01.001-Cans	Solid	0	0	1	0
S834595	26	57	SP AG Cement Cans No Issues	LA-CIN01.001-Cans	Solid	0	0	1	0
S834594	26	57	SP AG Cement Cans No Issues	LA-CIN01.001-Cans	Solid	0	0	1	0
S834732	26	57	SP AG Cement Cans No Issues	LA-CIN01.001-Cans	Solid	0	0	1	0
S841286	26	57	SP AG Cement Cans No Issues	LA-CIN01.001-Cans	Solid	0	0	1	0
S834394	26	57	SP AG Cement Cans No Issues	LA-CIN01.001-Cans	Solid	0	0	1	0
S841327	26	57	SP AG Cement Cans No Issues	LA-CIN01.001-Cans	Solid	0	0	1	0
S841326	26	57	SP AG Cement Cans No Issues	LA-CIN01.001-Cans	Solid	0	0	1	0
S834497	26	57	SP AG Cement Cans No Issues	LA-CIN01.001-Cans	Solid	0	0	1	0
S834504	26	57	SP AG Cement Cans No Issues	LA-CIN01.001-Cans	Solid	0	0	1	0
S864651	26	57	SP AG Cement Cans No Issues	LA-CIN01.001-Cans	Solid	0	0	1	0
S864652	26	57	SP AG Cement Cans No Issues	LA-CIN01.001-Cans	Solid	0	0	1	0
S841293	26	57	SP AG Cement Cans No Issues	LA-CIN01.001-Cans	Solid	0	0	1	0
S864653	26	57	SP AG Cement Cans No Issues	LA-CIN01.001-Cans	Solid	0	0	1	0
S835293	26	57	SP AG Cement Cans No Issues	LA-CIN01.001-Cans	Solid	0	0	1	0
S841287	26	57	SP AG Cement Cans No Issues	LA-CIN01.001-Cans	Solid	0	0	1	0
S835294	26	57	SP AG Cement Cans No Issues	LA-CIN01.001-Cans	Solid	0	0	1	0
S841285	26	57	SP AG Cement Cans No Issues	LA-CIN01.001-Cans	Solid	0	0	1	0
S841284	26	57	SP AG Cement Cans No Issues	LA-CIN01.001-Cans	Solid	0	0	1	0
S841283	26	57	SP AG Cement Cans No Issues	LA-CIN01.001-Cans	Solid	0	0	1	0
S834530	26	57	SP AG Cement Cans No Issues	LA-CIN01.001-Cans	Solid	0	0	1	0
S864655	26	57	SP AG Cement Cans No Issues	LA-CIN01.001-Cans	Solid	0	0	1	0
S864656	26	57	SP AG Cement Cans No Issues	LA-CIN01.001-Cans	Solid	0	0	1	0
S823153	26	57	SP AG Cement Cans No Issues	LA-CIN01.001-Cans	Solid	0	0	1	0
S864658	26	57	SP AG Cement Cans No Issues	LA-CIN01.001-Cans	Solid	0	0	1	0

PKG_ID	WASTE_CD	Solution Package	Description	Waste Stream	Waste Type	Needs Remediation	Remediation Planned	Needs Characterization	CCP In Process
S835422	26	57	SP AG Cement Cans No Issues	LA-CIN01.001-Cans	Solid	0	0	1	0
S834474	26	57	SP AG Cement Cans No Issues	LA-CIN01.001-Cans	Solid	0	0	1	0
S834529	26	57	SP AG Cement Cans No Issues	LA-CIN01.001-Cans	Solid	0	0	1	0
S844353	26	57	SP AG Cement Cans No Issues	LA-CIN01.001-Cans	Solid	0	0	1	0
S864361	26	57	SP AG Cement Cans No Issues	LA-CIN01.001-Cans	Solid	0	0	1	0
S864305	26	57	SP AG Cement Cans No Issues	LA-CIN01.001-Cans	Solid	0	0	1	0
S864326	26	57	SP AG Cement Cans No Issues	LA-CIN01.001-Cans	Solid	0	0	1	0
S833586	26	57	SP AG Cement Cans No Issues	LA-CIN01.001-Cans	Solid	0	0	1	0
S844603	26	57	SP AG Cement Cans No Issues	LA-CIN01.001-Cans	Solid	0	0	1	0
S844585	26	57	SP AG Cement Cans No Issues	LA-CIN01.001-Cans	Solid	0	0	1	0
S833594	26	57	SP AG Cement Cans No Issues	LA-CIN01.001-Cans	Solid	0	0	1	0
S844583	26	57	SP AG Cement Cans No Issues	LA-CIN01.001-Cans	Solid	0	0	1	0
S833566	26	57	SP AG Cement Cans No Issues	LA-CIN01.001-Cans	Solid	0	0	1	0
S833603	26	57	SP AG Cement Cans No Issues	LA-CIN01.001-Cans	Solid	0	0	1	0
S833538	26	57	SP AG Cement Cans No Issues	LA-CIN01.001-Cans	Solid	0	0	1	0
S833840	26	57	SP AG Cement Cans No Issues	LA-CIN01.001-Cans	Solid	0	0	1	0
S844329	26	57	SP AG Cement Cans No Issues	LA-CIN01.001-Cans	Solid	0	0	1	0
S844328	26	57	SP AG Cement Cans No Issues	LA-CIN01.001-Cans	Solid	0	0	1	0
S864571	26	57	SP AG Cement Cans No Issues	LA-CIN01.001-Cans	Solid	0	0	1	0
S833843	26	57	SP AG Cement Cans No Issues	LA-CIN01.001-Cans	Solid	0	0	1	0
S844272	26	57	SP AG Cement Cans No Issues	LA-CIN01.001-Cans	Solid	0	0	1	0
S844258	26	57	SP AG Cement Cans No Issues	LA-CIN01.001-Cans	Solid	0	0	1	0
S833845	26	57	SP AG Cement Cans No Issues	LA-CIN01.001-Cans	Solid	0	0	1	0
S864717	26	57	SP AG Cement Cans No Issues	LA-CIN01.001-Cans	Solid	0	0	1	0
S864327	26	57	SP AG Cement Cans No Issues	LA-CIN01.001-Cans	Solid	0	0	1	0
S864719	26	57	SP AG Cement Cans No Issues	LA-CIN01.001-Cans	Solid	0	0	1	0
S822860	26	57	SP AG Cement Cans No Issues	LA-CIN01.001-Cans	Solid	0	0	1	0
S863806	26	57	SP AG Cement Cans No Issues	LA-CIN01.001-Cans	Solid	0	0	1	0
S863808	26	57	SP AG Cement Cans No Issues	LA-CIN01.001-Cans	Solid	0	0	1	0
S864722	26	57	SP AG Cement Cans No Issues	LA-CIN01.001-Cans	Solid	0	0	1	0
S864200	26	57	SP AG Cement Cans No Issues	LA-CIN01.001-Cans	Solid	0	0	1	0
S864203	26	57	SP AG Cement Cans No Issues	LA-CIN01.001-Cans	Solid	0	0	1	0
S846102	26	57	SP AG Cement Cans No Issues	LA-CIN01.001-Cans	Solid	0	0	1	0
S864204	26	57	SP AG Cement Cans No Issues	LA-CIN01.001-Cans	Solid	0	0	1	0
S845045	26	57	SP AG Cement Cans No Issues	LA-CIN01.001-Cans	Solid	0	0	1	0
S864720	26	57	SP AG Cement Cans No Issues	LA-CIN01.001-Cans	Solid	0	0	1	0
S833844	26	57	SP AG Cement Cans No Issues	LA-CIN01.001-Cans	Solid	0	0	1	0
S864301	26	57	SP AG Cement Cans No Issues	LA-CIN01.001-Cans	Solid	0	0	1	0
S864302	26	57	SP AG Cement Cans No Issues	LA-CIN01.001-Cans	Solid	0	0	1	0
S845139	26	57	SP AG Cement Cans No Issues	LA-CIN01.001-Cans	Solid	0	0	1	0
S833500	26	57	SP AG Cement Cans No Issues	LA-CIN01.001-Cans	Solid	0	0	1	0
S845137	26	57	SP AG Cement Cans No Issues	LA-CIN01.001-Cans	Solid	0	0	1	0
S864303	26	57	SP AG Cement Cans No Issues	LA-CIN01.001-Cans	Solid	0	0	1	0
S833507	26	57	SP AG Cement Cans No Issues	LA-CIN01.001-Cans	Solid	0	0	1	0
S864304	26	57	SP AG Cement Cans No Issues	LA-CIN01.001-Cans	Solid	0	0	1	0
S833513	26	57	SP AG Cement Cans No Issues	LA-CIN01.001-Cans	Solid	0	0	1	0
S864721	26	57	SP AG Cement Cans No Issues	LA-CIN01.001-Cans	Solid	0	0	1	0
S844250	26	57	SP AG Cement Cans No Issues	LA-CIN01.001-Cans	Solid	0	0	1	0
S864570	26	57	SP AG Cement Cans No Issues	LA-CIN01.001-Cans	Solid	0	0	1	0
S833935	26	57	SP AG Cement Cans No Issues	LA-CIN01.001-Cans	Solid	0	0	1	0
S864569	26	57	SP AG Cement Cans No Issues	LA-CIN01.001-Cans	Solid	0	0	1	0

PKG_ID	WASTE_CD	Solution Package	Description	Waste Stream	Waste Type	Needs Remediation	Remediation Planned	Needs Characterization	CCP In Process
S833897	26	57	SP AG Cement Cans No Issues	LA-CIN01.001-Cans	Solid	0	0	1	0
S833885	26	57	SP AG Cement Cans No Issues	LA-CIN01.001-Cans	Solid	0	0	1	0
S833873	26	57	SP AG Cement Cans No Issues	LA-CIN01.001-Cans	Solid	0	0	1	0
S843641	26	57	SP AG Cement Cans No Issues	LA-CIN01.001-Cans	Solid	0	0	1	0
S844194	26	57	SP AG Cement Cans No Issues	LA-CIN01.001-Cans	Solid	0	0	1	0
S844327	26	57	SP AG Cement Cans No Issues	LA-CIN01.001-Cans	Solid	0	0	1	0
S843647	26	57	SP AG Cement Cans No Issues	LA-CIN01.001-Cans	Solid	0	0	1	0
S833877	26	57	SP AG Cement Cans No Issues	LA-CIN01.001-Cans	Solid	0	0	1	0
S864568	26	57	SP AG Cement Cans No Issues	LA-CIN01.001-Cans	Solid	0	0	1	0
S844166	26	57	SP AG Cement Cans No Issues	LA-CIN01.001-Cans	Solid	0	0	1	0
S864567	26	57	SP AG Cement Cans No Issues	LA-CIN01.001-Cans	Solid	0	0	1	0
S844193	26	57	SP AG Cement Cans No Issues	LA-CIN01.001-Cans	Solid	0	0	1	0
S844208	26	57	SP AG Cement Cans No Issues	LA-CIN01.001-Cans	Solid	0	0	1	0
S844249	26	57	SP AG Cement Cans No Issues	LA-CIN01.001-Cans	Solid	0	0	1	0
S834385	26	57	SP AG Cement Cans No Issues	LA-CIN01.001-Cans	Solid	0	0	1	0
S844227	26	57	SP AG Cement Cans No Issues	LA-CIN01.001-Cans	Solid	0	0	1	0
S833850	26	57	SP AG Cement Cans No Issues	LA-CIN01.001-Cans	Solid	0	0	1	0
S833854	26	57	SP AG Cement Cans No Issues	LA-CIN01.001-Cans	Solid	0	0	1	0
S844224	26	57	SP AG Cement Cans No Issues	LA-CIN01.001-Cans	Solid	0	0	1	0
S843517	26	57	SP AG Cement Cans No Issues	LA-CIN01.001-Cans	Solid	0	0	1	0
S864716	26	57	SP AG Cement Cans No Issues	LA-CIN01.001-Cans	Solid	0	0	1	0
S834384	26	57	SP AG Cement Cans No Issues	LA-CIN01.001-Cans	Solid	0	0	1	0
S833855	26	57	SP AG Cement Cans No Issues	LA-CIN01.001-Cans	Solid	0	0	1	0
S834383	26	57	SP AG Cement Cans No Issues	LA-CIN01.001-Cans	Solid	0	0	1	0
S844206	26	57	SP AG Cement Cans No Issues	LA-CIN01.001-Cans	Solid	0	0	1	0
S844205	26	57	SP AG Cement Cans No Issues	LA-CIN01.001-Cans	Solid	0	0	1	0
S864365	26	57	SP AG Cement Cans No Issues	LA-CIN01.001-Cans	Solid	0	0	1	0
S832140	27	01	SP >200 mR/hr (AG Debris Drums)	LA-MHD01.001	Debris	0	1	0	0
S825639	27	01	SP >200 mR/hr (AG Debris Drums)	LA-MHD01.001	Debris	0	1	0	0
S822894	27	01	SP >200 mR/hr (AG Debris Drums)	LA-MHD01.001	Debris	0	1	0	0
S832040	27	01	SP >200 mR/hr (AG Debris Drums)	LA-MHD01.001	Debris	0	1	0	0
S823276	27	01	SP >200 mR/hr (AG Debris Drums)	LA-MHD01.001	Debris	0	1	0	0
S825730	27	01	SP >200 mR/hr (AG Debris Drums)	LA-MHD01.001	Debris	0	1	0	0
S824967	27	01	SP >200 mR/hr (AG Debris Drums)	LA-MHD01.001	Debris	0	1	0	0
S824660	27	01	SP >200 mR/hr (AG Debris Drums)	LA-MHD01.001	Debris	0	1	0	0
S825640	27	01	SP >200 mR/hr (AG Debris Drums)	LA-MHD01.001	Debris	0	1	0	0
S824575	27	01	SP >200 mR/hr (AG Debris Drums)	LA-MHD01.001	Debris	0	0	0	0
S824551	27	01	SP >200 mR/hr (AG Debris Drums)	LA-MHD01.001	Debris	0	1	0	0
S825902	27	01	SP >200 mR/hr (AG Debris Drums)	LA-MHD01.001	Debris	0	1	0	0
S825812	27	01	SP >200 mR/hr (AG Debris Drums)	LA-MHD01.001	Debris	0	1	0	0
S824700	27	01	SP >200 mR/hr (AG Debris Drums)	LA-MHD01.001	Debris	0	1	0	0
S824949	27	01	SP >200 mR/hr (AG Debris Drums)	LA-MHD01.001	Debris	0	1	0	0
S825020	27	01	SP >200 mR/hr (AG Debris Drums)	LA-MHD01.001	Debris	0	1	0	0
S824541	27	01	SP >200 mR/hr (AG Debris Drums)	LA-MHD01.001	Debris	0	1	0	0
S824188	27	01	SP >200 mR/hr (AG Debris Drums)	LA-MHD01.001	Debris	1	1	0	0
S825920	27	01	SP >200 mR/hr (AG Debris Drums)	LA-MHD01.001	Debris	0	1	0	0
S823221	27	01	SP >200 mR/hr (AG Debris Drums)	LA-MHD01.001	Debris	0	1	0	0
S824508	27	01	SP >200 mR/hr (AG Debris Drums)	LA-MHD01.001	Debris	0	1	0	0
S825811	27	01	SP >200 mR/hr (AG Debris Drums)	LA-MHD01.001	Debris	0	1	0	0
S825021	27	01	SP >200 mR/hr (AG Debris Drums)	LA-MHD01.001	Debris	0	1	0	0
S825810	27	01	SP >200 mR/hr (AG Debris Drums)	LA-MHD01.001	Debris	0	1	0	0

PKG_ID	WASTE_CD	Solution Package	Description	Waste Stream	Waste Type	Needs Remediation	Remediation Planned	Needs Characterization	CCP In Process
S824208	27	01	SP >200 mR/hr (AG Debris Drums)	LA-MHD01.001	Debris	0	1	0	0
S825793	27	01	SP >200 mR/hr (AG Debris Drums)	LA-MHD01.001	Debris	0	1	0	0
S824951	27	01	SP >200 mR/hr (AG Debris Drums)	LA-MHD01.001	Debris	0	0	0	0
S833240	27	01	SP >200 mR/hr (AG Debris Drums)	LA-MHD01.001	Debris	0	1	0	0
S845201	27	01	SP >200 mR/hr (AG Debris Drums)	LA-MHD01.001	Debris	0	1	0	0
S832448	27	01	SP >200 mR/hr (AG Debris Drums)	LA-MHD01.001	Debris	0	1	0	0
S832302	27	01	SP >200 mR/hr (AG Debris Drums)	LA-MHD01.001	Debris	0	1	0	0
S832301	27	01	SP >200 mR/hr (AG Debris Drums)	LA-MHD01.001	Debris	0	1	0	0
S833037	27	01	SP >200 mR/hr (AG Debris Drums)	LA-MHD01.001	Debris	0	1	0	0
S832965	27	01	SP >200 mR/hr (AG Debris Drums)	LA-MHD01.001	Debris	0	1	0	0
S832570	27	01	SP >200 mR/hr (AG Debris Drums)	LA-MHD01.001	Debris	0	1	0	0
S844213	27	01	SP >200 mR/hr (AG Debris Drums)	LA-MHD01.001	Debris	0	1	0	0
S891513	27	01	SP >200 mR/hr (AG Debris Drums)	LA-MHD01.001	Debris	1	1	0	0
S832303	27	01	SP >200 mR/hr (AG Debris Drums)	LA-MHD01.001	Debris	0	1	0	0
S832179	27	01	SP >200 mR/hr (AG Debris Drums)	LA-MHD01.001	Debris	0	1	0	0
S832178	27	01	SP >200 mR/hr (AG Debris Drums)	LA-MHD01.001	Debris	0	1	0	0
S832163	27	01	SP >200 mR/hr (AG Debris Drums)	LA-MHD01.001	Debris	0	1	0	0
S891279	27	01	SP >200 mR/hr (AG Debris Drums)	LA-MHD01.001	Debris	0	1	0	0
S832156	27	01	SP >200 mR/hr (AG Debris Drums)	LA-MHD01.001	Debris	0	1	0	0
S832150	27	01	SP >200 mR/hr (AG Debris Drums)	LA-MHD01.001	Debris	0	1	0	0
S833846	27	01	SP >200 mR/hr (AG Debris Drums)	LA-MHD01.001	Debris	1	1	0	0
S832452	27	01	SP >200 mR/hr (AG Debris Drums)	LA-MHD01.001	Debris	0	1	0	0
S910170	27	01	SP >200 mR/hr (AG Debris Drums)	LA-MHD01.001	Debris	1	1	0	0
S832340	27	01	SP >200 mR/hr (AG Debris Drums)	LA-MHD01.001	Debris	0	1	0	0
S832338	27	01	SP >200 mR/hr (AG Debris Drums)	LA-MHD01.001	Debris	0	1	0	0
S832347	27	01	SP >200 mR/hr (AG Debris Drums)	LA-MHD01.001	Debris	0	1	0	0
S881607	27	01	SP >200 mR/hr (AG Debris Drums)	LA-MHD01.001	Debris	0	1	0	0
S881570	27	01	SP >200 mR/hr (AG Debris Drums)	LA-MHD01.001	Debris	0	1	0	0
S833233	27	01	SP >200 mR/hr (AG Debris Drums)	LA-MHD01.001	Debris	0	1	0	0
S832499	27	01	SP >200 mR/hr (AG Debris Drums)	LA-MHD01.001	Debris	1	1	0	0
S833231	27	01	SP >200 mR/hr (AG Debris Drums)	LA-MHD01.001	Debris	0	1	0	0
S832322	27	01	SP >200 mR/hr (AG Debris Drums)	LA-MHD01.001	Debris	0	1	0	0
S832425	27	01	SP >200 mR/hr (AG Debris Drums)	LA-MHD01.001	Debris	0	1	0	0
S833038	27	01	SP >200 mR/hr (AG Debris Drums)	LA-MHD01.001	Debris	0	1	0	0
S832424	27	01	SP >200 mR/hr (AG Debris Drums)	LA-MHD01.001	Debris	0	1	0	0
S833348	27	01	SP >200 mR/hr (AG Debris Drums)	LA-MHD01.001	Debris	0	1	0	0
S832320	27	01	SP >200 mR/hr (AG Debris Drums)	LA-MHD01.001	Debris	0	1	0	0
S873554	27	01	SP >200 mR/hr (AG Debris Drums)	LA-MHD01.001	Debris	0	1	0	0
S833481	27	01	SP >200 mR/hr (AG Debris Drums)	LA-MHD01.001	Debris	0	1	0	0
S832421	27	01	SP >200 mR/hr (AG Debris Drums)	LA-MHD01.001	Debris	0	1	0	0
S832314	27	01	SP >200 mR/hr (AG Debris Drums)	LA-MHD01.001	Debris	0	1	0	0
S832422	27	01	SP >200 mR/hr (AG Debris Drums)	LA-MHD01.001	Debris	0	1	0	0
S832450	27	01	SP >200 mR/hr (AG Debris Drums)	LA-MHD01.001	Debris	0	1	0	0
S832339	27	01	SP >200 mR/hr (AG Debris Drums)	LA-MHD01.001	Debris	0	1	0	0
S870478	27	01	SP >200 mR/hr (AG Debris Drums)	LA-MHD01.001	Debris	0	1	0	0
S832148	27	01	SP >200 mR/hr (AG Debris Drums)	LA-MHD01.001	Debris	0	1	0	0
S843995	27	01	SP >200 mR/hr (AG Debris Drums)	LA-MHD01.001	Debris	0	1	0	0
S832500	27	01	SP >200 mR/hr (AG Debris Drums)	LA-MHD01.001	Debris	0	1	0	0
S832158	27	01	SP >200 mR/hr (AG Debris Drums)	LA-MHD01.001	Debris	0	1	0	0
S841292	27	01	SP >200 mR/hr (AG Debris Drums)	LA-MHD01.001	Debris	0	1	0	0
S832466	27	01	SP >200 mR/hr (AG Debris Drums)	LA-MHD01.001	Debris	0	1	0	0

PKG_ID	WASTE_CD	Solution Package	Description	Waste Stream	Waste Type	Needs Remediation	Remediation Planned	Needs Characterization	CCP In Process
S832145	27	01	SP >200 mR/hr (AG Debris Drums)	LA-MHD01.001	Debris	0	1	0	0
S832144	27	01	SP >200 mR/hr (AG Debris Drums)	LA-MHD01.001	Debris	0	1	0	0
S832501	27	01	SP >200 mR/hr (AG Debris Drums)	LA-MHD01.001	Debris	0	1	0	0
S833243	27	01	SP >200 mR/hr (AG Debris Drums)	LA-MHD01.001	Debris	0	1	0	0
S832147	27	01	SP >200 mR/hr (AG Debris Drums)	LA-MHD01.001	Debris	0	1	0	0
S832141	27	01	SP >200 mR/hr (AG Debris Drums)	LA-MHD01.001	Debris	0	1	0	0
S832472	27	01	SP >200 mR/hr (AG Debris Drums)	LA-MHD01.001	Debris	0	1	0	0
S870475	27	01	SP >200 mR/hr (AG Debris Drums)	LA-MHD01.001	Debris	1	1	0	0
S832473	27	01	SP >200 mR/hr (AG Debris Drums)	LA-MHD01.001	Debris	0	1	0	0
S834539	27	01	SP >200 mR/hr (AG Debris Drums)	LA-MHD01.001	Debris	0	1	0	0
S835283	27	01	SP >200 mR/hr (AG Debris Drums)	LA-MHD01.001	Debris	0	1	0	0
S834633	27	01	SP >200 mR/hr (AG Debris Drums)	LA-MHD01.001	Debris	0	1	0	0
S832498	27	01	SP >200 mR/hr (AG Debris Drums)	LA-MHD01.001	Debris	0	1	0	0
S832143	27	01	SP >200 mR/hr (AG Debris Drums)	LA-MHD01.001	Debris	0	1	0	0
S843962	27	01	SP >200 mR/hr (AG Debris Drums)	LA-MHD01.001	Debris	0	1	0	0
S832149	27	01	SP >200 mR/hr (AG Debris Drums)	LA-MHD01.001	Debris	0	1	0	0
S832502	27	01	SP >200 mR/hr (AG Debris Drums)	LA-MHD01.001	Debris	0	1	0	0
S842234	27	01	SP >200 mR/hr (AG Debris Drums)	LA-MHD01.001	Debris	0	1	0	0
S910171	27	01	SP >200 mR/hr (AG Debris Drums)	LA-MHD01.001	Debris	0	0	0	0
S832154	27	01	SP >200 mR/hr (AG Debris Drums)	LA-MHD01.001	Debris	0	1	0	0
S842323	27	01	SP >200 mR/hr (AG Debris Drums)	LA-MHD01.001	Debris	0	1	0	0
S832155	27	01	SP >200 mR/hr (AG Debris Drums)	LA-MHD01.001	Debris	0	1	0	0
S833341	27	01	SP >200 mR/hr (AG Debris Drums)	LA-MHD01.001	Debris	0	1	0	0
S833937	27	01	SP >200 mR/hr (AG Debris Drums)	LA-MHD01.001	Debris	0	1	0	0
S910172	27	01	SP >200 mR/hr (AG Debris Drums)	LA-MHD01.001	Debris	0	0	0	0
S834406	27	01	SP >200 mR/hr (AG Debris Drums)	LA-MHD01.001	Debris	0	1	0	0
S852592	27	03	SP Unvented (AG Debris Drums)	LA-MHD01.001	Debris	1	1	0	0
S892963	27	03	SP Unvented (AG Debris Drums)	LA-MHD01.001	Debris	1	1	0	0
S891387	27	03	SP Unvented (AG Debris Drums)	LA-MHD01.001	Debris	1	1	0	0
S851436	27	03	SP Unvented (AG Debris Drums)	LA-MHD01.001	Debris	1	1	0	0
S823229	27	03	SP Unvented (AG Debris Drums)	LA-MHD01.001	Debris	1	1	0	0
S901114	27	03	SP Unvented (AG Debris Drums)	LA-MHD01.001	Debris	1	1	0	0
S844215	27	03	SP Unvented (AG Debris Drums)	LA-MHD01.001	Debris	1	1	0	0
S825664	27	03	SP Unvented (AG Debris Drums)	LA-MHD01.001	Debris	1	1	0	0
S842526	27	03	SP Unvented (AG Debris Drums)	LA-MHD01.001	Debris	1	1	0	0
S841239	27	03	SP Unvented (AG Debris Drums)	LA-MHD01.001	Debris	1	1	0	0
S861995	27	03	SP Unvented (AG Debris Drums)	LA-MHD01.001	Debris	1	1	0	0
S852931	27	03	SP Unvented (AG Debris Drums)	LA-MHD01.001	Debris	1	1	0	0
S852530	27	03	SP Unvented (AG Debris Drums)	LA-MHD01.001	Debris	1	1	0	0
S844253	27	03	SP Unvented (AG Debris Drums)	LA-MHD01.001	Debris	1	1	0	0
S841251	27	03	SP Unvented (AG Debris Drums)	LA-MHD01.001	Debris	1	1	0	0
S855216	27	03	SP Unvented (AG Debris Drums)	LA-MHD01.001	Debris	1	1	0	0
S851248	27	03	SP Unvented (AG Debris Drums)	LA-MHD01.001	Debris	1	1	0	0
S900215	27	03	SP Unvented (AG Debris Drums)	LA-MHD01.001	Debris	1	1	0	0
S833241	27	12	SP Overweight (AG Debris)	LA-MHD01.001	Debris	1	1	0	0
S824950	27	12	SP Overweight (AG Debris)	LA-MHD01.001	Debris	1	1	0	0
S833342	27	12	SP Overweight (AG Debris)	LA-MHD01.001	Debris	1	1	0	0
S824184	27	12	SP Overweight (AG Debris)	LA-MHD01.001	Debris	1	1	0	0
S832497	27	12	SP Overweight (AG Debris)	LA-MHD01.001	Debris	1	1	0	0
S842181	27	12	SP Overweight (AG Debris)	LA-MHD01.001	Debris	1	1	0	0
S851772	27	12	SP Overweight (AG Debris)	LA-MHD01.001	Debris	1	1	0	0

PKG_ID	WASTE_CD	Solution Package	Description	Waste Stream	Waste Type	Needs Remediation	Remediation Planned	Needs Characterization	CCP In Process
S821203	27	12	SP Overweight (AG Debris)	LA-MHD01.001	Debris	1	1	0	0
S824187	27	12	SP Overweight (AG Debris)	LA-MHD01.001	Debris	1	1	0	0
S824661	27	12	SP Overweight (AG Debris)	LA-MHD01.001	Debris	1	1	0	0
S824550	27	12	SP Overweight (AG Debris)	LA-MHD01.001	Debris	1	1	0	0
S825729	27	12	SP Overweight (AG Debris)	LA-MHD01.001	Debris	1	1	0	0
S832569	27	12	SP Overweight (AG Debris)	LA-MHD01.001	Debris	1	1	0	0
S822876	27	12	SP Overweight (AG Debris)	LA-MHD01.001	Debris	1	1	0	0
S833344	27	12	SP Overweight (AG Debris)	LA-MHD01.001	Debris	1	1	0	0
S824181	27	13	SP Container Issues #13 (AG Debris)	LA-MHD01.001	Debris	0	0	0	0
S822838	27	13	SP Container Issues #13 (AG Debris)	LA-MHD01.001	Debris	0	1	0	0
S851250	27	13	SP Container Issues #13 (AG Debris)	LA-MHD01.001	Debris	0	1	0	0
S863696	27	13	SP Container Issues #13 (AG Debris)	LA-MHD01.001	Debris	0	1	0	0
S851764	27	13	SP Container Issues #13 (AG Debris)	LA-MHD01.001	Debris	0	1	0	0
S851506	27	13	SP Container Issues #13 (AG Debris)	LA-MHD01.001	Debris	0	1	0	0
S851432	27	13	SP Container Issues #13 (AG Debris)	LA-MHD01.001	Debris	0	1	0	0
S832464	27	13	SP Container Issues #13 (AG Debris)	LA-MHD01.001	Debris	0	1	0	0
S883130	27	13	SP Container Issues #13 (AG Debris)	LA-MHD01.001	Debris	0	1	0	0
S870338	27	13	SP Container Issues #13 (AG Debris)	LA-MHD01.001	Debris	0	1	0	0
S846037	27	13	SP Container Issues #13 (AG Debris)	LA-MHD01.001	Debris	0	1	0	0
S846088	27	13	SP Container Issues #13 (AG Debris)	LA-MHD01.001	Debris	0	1	0	0
S842528	27	13	SP Container Issues #13 (AG Debris)	LA-MHD01.001	Debris	0	1	0	0
S823194	27	13	SP Container Issues #13 (AG Debris)	LA-MHD01.001	Debris	0	1	0	0
S823187	27	13	SP Container Issues #13 (AG Debris)	LA-MHD01.001	Debris	0	1	0	0
S881563	27	13	SP Container Issues #13 (AG Debris)	LA-MHD01.001	Debris	0	1	0	0
S881562	27	13	SP Container Issues #13 (AG Debris)	LA-MHD01.001	Debris	0	1	0	0
S881569	27	13	SP Container Issues #13 (AG Debris)	LA-MHD01.001	Debris	0	1	0	0
S871844	27	13	SP Container Issues #13 (AG Debris)	LA-MHD01.001	Debris	0	1	0	0
S846172	27	13	SP Container Issues #13 (AG Debris)	LA-MHD01.001	Debris	0	1	0	0
S846132	27	13	SP Container Issues #13 (AG Debris)	LA-MHD01.001	Debris	0	1	0	0
S862411	27	13	SP Container Issues #13 (AG Debris)	LA-MHD01.001	Debris	0	1	0	0
S844684	27	13	SP Container Issues #13 (AG Debris)	LA-MHD01.001	Debris	0	1	0	0
S825638	27	13	SP Container Issues #13 (AG Debris)	LA-MHD01.001	Debris	0	1	0	0
S846195	27	13	SP Container Issues #13 (AG Debris)	LA-MHD01.001	Debris	0	1	0	0
S833261	27	13	SP Container Issues #13 (AG Debris)	LA-MHD01.001	Debris	0	1	0	0
S832241	27	13	SP Container Issues #13 (AG Debris)	LA-MHD01.001	Debris	0	1	0	0
S863788	27	13	SP Container Issues #13 (AG Debris)	LA-MHD01.001	Debris	0	1	0	0
S863787	27	13	SP Container Issues #13 (AG Debris)	LA-MHD01.001	Debris	0	1	0	0
S864332	27	13	SP Container Issues #13 (AG Debris)	LA-MHD01.001	Debris	0	0	0	0
S860096	27	13	SP Container Issues #13 (AG Debris)	LA-MHD01.001	Debris	0	1	0	0
S881608	27	13	SP Container Issues #13 (AG Debris)	LA-MHD01.001	Debris	0	1	0	0
S841320	27	14	SP NDA-Uncertain (AG Debris)	LA-MHD01.001	Debris	0	0	1	0
S822765	27	16	SP PID in Matrix (AG Debris)	LA-MHD01.001	Debris	0	0	0	0
S852895	27	16	SP PID in Matrix (AG Debris)	LA-MHD01.001	Debris	0	1	0	0
S825018	27	16	SP PID in Matrix (AG Debris)	LA-MHD01.001	Debris	0	0	0	0
S823166	27	20	SP Multiple Issues (AG Debris)	LA-MHD01.001	Debris	1	1	0	0
S842213	27	21	SP No Issue (AG Debris)	LA-MHD01.001	Debris	0	1	0	0
S843528	27	21	SP No Issue (AG Debris)	LA-MHD01.001	Debris	0	1	0	0
S823004	27	21	SP No Issue (AG Debris)	LA-MHD01.001	Debris	0	1	0	0
S855943	27	21	SP No Issue (AG Debris)	LA-MHD01.001	Debris	0	1	0	0
S824407	27	21	SP No Issue (AG Debris)	LA-MHD01.001	Debris	0	1	0	0
S832420	27	21	SP No Issue (AG Debris)	LA-MHD01.001	Debris	1	1	0	0

PKG_ID	WASTE_CD	Solution Package	Description	Waste Stream	Waste Type	Needs Remediation	Remediation Planned	Needs Characterization	CCP In Process
S824659	27	21	SP No Issue (AG Debris)	LA-MHD01.001	Debris	1	1	0	0
S825019	27	21	SP No Issue (AG Debris)	LA-MHD01.001	Debris	0	0	0	0
S822952	27	21	SP No Issue (AG Debris)	LA-MHD01.001	Debris	0	1	0	0
S851594	27	26	SP Container Issues (AG Solids)	LA-MIN04-S.001	Solid	1	1	0	0
S864663	27	72	SP Salt Waste (#72)	LA-MHD01.001	Debris	0	1	0	0
S864662	27	72	SP Salt Waste (#72)	LA-MHD01.001	Debris	0	1	0	0
S846660	27	72	SP Salt Waste (#72)	LA-MHD01.001	Debris	0	1	0	0
S863789	27	72	SP Salt Waste (#72)	LA-MHD01.001	Debris	0	1	0	0
S841240	27	72	SP Salt Waste (#72)	LA-MHD01.001	Debris	0	1	0	0
S851426	27	72	SP Salt Waste (#72)	LA-MHD01.001	Debris	0	1	0	0
S846168	27	72	SP Salt Waste (#72)	LA-MHD01.001	Debris	0	1	0	0
S844689	27	72	SP Salt Waste (#72)	LA-MHD01.001	Debris	0	1	0	0
S846107	27	72	SP Salt Waste (#72)	LA-MHD01.001	Debris	0	1	0	0
S846096	27	72	SP Salt Waste (#72)	LA-MHD01.001	Debris	0	1	0	0
S845338	27	72	SP Salt Waste (#72)	LA-MHD01.001	Debris	0	1	0	0
S842463	27	72	SP Salt Waste (#72)	LA-MHD01.001	Debris	0	1	0	0
S845104	27	72	SP Salt Waste (#72)	LA-MHD01.001	Debris	0	1	0	0
S845072	27	72	SP Salt Waste (#72)	LA-MHD01.001	Debris	0	1	0	0
S845031	27	72	SP Salt Waste (#72)	LA-MHD01.001	Debris	0	1	0	0
S844573	27	72	SP Salt Waste (#72)	LA-MHD01.001	Debris	0	1	0	0
S841314	27	72	SP Salt Waste (#72)	LA-MHD01.001	Debris	0	1	0	0
S862241	27	72	SP Salt Waste (#72)	LA-MHD01.001	Debris	0	1	0	0
S861976	27	72	SP Salt Waste (#72)	LA-MHD01.001	Debris	0	1	0	0
S861980	27	72	SP Salt Waste (#72)	LA-MHD01.001	Debris	0	1	0	0
S855139	27	72	SP Salt Waste (#72)	LA-MHD01.001	Debris	0	1	0	0
S853492	27	72	SP Salt Waste (#72)	LA-MHD01.001	Debris	0	1	0	0
S855126	27	72	SP Salt Waste (#72)	LA-MHD01.001	Debris	0	1	0	0
S854616	27	72	SP Salt Waste (#72)	LA-MHD01.001	Debris	0	1	0	0
S853899	27	72	SP Salt Waste (#72)	LA-MHD01.001	Debris	0	1	0	0
S861975	27	72	SP Salt Waste (#72)	LA-MHD01.001	Debris	0	1	0	0
S870213	27	72	SP Salt Waste (#72)	LA-MHD01.001	Debris	0	1	0	0
S855240	27	72	SP Salt Waste (#72)	LA-MHD01.001	Debris	0	1	0	0
S853006	27	72	SP Salt Waste (#72)	LA-MHD01.001	Debris	0	1	0	0
S862255	27	72	SP Salt Waste (#72)	LA-MHD01.001	Debris	0	1	0	0
S853279	27	72	SP Salt Waste (#72)	LA-MHD01.001	Debris	0	1	0	0
S853771	27	72	SP Salt Waste (#72)	LA-MHD01.001	Debris	0	1	0	0
S852590	27	72	SP Salt Waste (#72)	LA-MHD01.001	Debris	0	1	0	0
S853326	27	72	SP Salt Waste (#72)	LA-MHD01.001	Debris	0	1	0	0
S853641	27	72	SP Salt Waste (#72)	LA-MHD01.001	Debris	0	1	0	0
S853898	27	72	SP Salt Waste (#72)	LA-MHD01.001	Debris	0	1	0	0
S851739	27	72	SP Salt Waste (#72)	LA-MHD01.001	Debris	0	1	0	0
S870381	27	72	SP Salt Waste (#72)	LA-MHD01.001	Debris	0	1	0	0
S860093	27	72	SP Salt Waste (#72)	LA-MHD01.001	Debris	0	1	0	0
S852923	27	72	SP Salt Waste (#72)	LA-MHD01.001	Debris	0	1	0	0
S855290	27	72	SP Salt Waste (#72)	LA-MHD01.001	Debris	0	1	0	0
S852513	27	72	SP Salt Waste (#72)	LA-MHD01.001	Debris	0	1	0	0
S855793	27	72	SP Salt Waste (#72)	LA-MHD01.001	Debris	0	1	0	0
S870065	27	72	SP Salt Waste (#72)	LA-MHD01.001	Debris	0	1	0	0
S860014	27	72	SP Salt Waste (#72)	LA-MHD01.001	Debris	0	1	0	0
S851752	27	72	SP Salt Waste (#72)	LA-MHD01.001	Debris	0	1	0	0
S860095	27	72	SP Salt Waste (#72)	LA-MHD01.001	Debris	0	1	0	0

PKG_ID	WASTE_CD	Solution Package	Description	Waste Stream	Waste Type	Needs Remediation	Remediation Planned	Needs Characterization	CCP In Process
S864694	27	72	SP Salt Waste (#72)	LA-MHD01.001	Debris	0	1	0	0
S852593	27	72	SP Salt Waste (#72)	LA-MHD01.001	Debris	0	1	0	0
S852883	27	72	SP Salt Waste (#72)	LA-MHD01.001	Debris	0	1	0	0
S855566	27	72	SP Salt Waste (#72)	LA-MHD01.001	Debris	0	1	0	0
S851682	27	72	SP Salt Waste (#72)	LA-MHD01.001	Debris	0	1	0	0
S824103	28	01	SP >200 mR/hr (AG Debris Drums)	LA-MHD01.001	Debris	0	0	0	0
S823036	28	01	SP >200 mR/hr (AG Debris Drums)	LA-MHD01.001	Debris	0	0	0	0
S853471	28	01	SP >200 mR/hr (AG Debris Drums)	LA-MHD01.001	Debris	0	0	0	0
S823277	28	01	SP >200 mR/hr (AG Debris Drums)	LA-MHD01.001	Debris	0	0	0	0
S822936	28	01	SP >200 mR/hr (AG Debris Drums)	LA-MHD01.001	Debris	0	1	0	0
S823243	28	01	SP >200 mR/hr (AG Debris Drums)	LA-MHD01.001	Debris	0	1	0	0
S823071	28	01	SP >200 mR/hr (AG Debris Drums)	LA-MHD01.001	Debris	0	0	0	0
S860108	28	01	SP >200 mR/hr (AG Debris Drums)	LA-MHD01.001	Debris	0	0	0	0
S822901	28	01	SP >200 mR/hr (AG Debris Drums)	LA-MHD01.001	Debris	0	0	0	0
S871919	28	01	SP >200 mR/hr (AG Debris Drums)	LA-MHD01.001	Debris	0	0	0	0
S822941	28	01	SP >200 mR/hr (AG Debris Drums)	LA-MHD01.001	Debris	0	0	0	0
S871888	28	01	SP >200 mR/hr (AG Debris Drums)	LA-MHD01.001	Debris	0	0	0	0
S823199	28	01	SP >200 mR/hr (AG Debris Drums)	LA-MHD01.001	Debris	0	0	0	0
S822873	28	01	SP >200 mR/hr (AG Debris Drums)	LA-MHD01.001	Debris	0	0	0	0
S825919	28	01	SP >200 mR/hr (AG Debris Drums)	LA-MHD01.001	Debris	0	1	0	0
S871854	28	01	SP >200 mR/hr (AG Debris Drums)	LA-MHD01.001	Debris	0	0	0	0
S871839	28	01	SP >200 mR/hr (AG Debris Drums)	LA-MHD01.001	Debris	0	0	0	0
S855275	28	01	SP >200 mR/hr (AG Debris Drums)	LA-MHD01.001	Debris	0	0	0	0
S871831	28	01	SP >200 mR/hr (AG Debris Drums)	LA-MHD01.001	Debris	0	0	0	0
S823269	28	03	SP Unvented (AG Debris Drums)	LA-MHD01.001	Debris	1	1	0	0
S863071	28	03	SP Unvented (AG Debris Drums)	LA-MHD01.001	Debris	1	1	0	0
S863630	28	13	SP Container Issues #13 (AG Debris)	LA-MHD01.001	Debris	0	1	0	0
S863692	28	13	SP Container Issues #13 (AG Debris)	LA-MHD01.001	Debris	0	0	0	0
S862959	28	13	SP Container Issues #13 (AG Debris)	LA-MHD01.001	Debris	0	1	0	0
S863693	28	13	SP Container Issues #13 (AG Debris)	LA-MHD01.001	Debris	0	0	0	0
S823027	28	13	SP Container Issues #13 (AG Debris)	LA-MHD01.001	Debris	0	0	0	0
S823140	28	13	SP Container Issues #13 (AG Debris)	LA-MHD01.001	Debris	0	0	0	0
S864323	28	13	SP Container Issues #13 (AG Debris)	LA-MHD01.001	Debris	0	0	0	0
S863657	28	13	SP Container Issues #13 (AG Debris)	LA-MHD01.001	Debris	0	0	0	0
S862967	28	13	SP Container Issues #13 (AG Debris)	LA-MHD01.001	Debris	0	0	0	0
S823052	28	13	SP Container Issues #13 (AG Debris)	LA-MHD01.001	Debris	0	0	0	0
S863708	28	13	SP Container Issues #13 (AG Debris)	LA-MHD01.001	Debris	0	1	0	0
S853288	28	13	SP Container Issues #13 (AG Debris)	LA-MHD01.001	Debris	0	1	0	0
S863074	28	13	SP Container Issues #13 (AG Debris)	LA-MHD01.001	Debris	0	1	0	0
S853712	28	13	SP Container Issues #13 (AG Debris)	LA-MHD01.001	Debris	0	0	0	0
S863779	28	13	SP Container Issues #13 (AG Debris)	LA-MHD01.001	Debris	0	1	0	0
S863662	28	13	SP Container Issues #13 (AG Debris)	LA-MHD01.001	Debris	0	0	0	0
S862506	28	13	SP Container Issues #13 (AG Debris)	LA-MHD01.001	Debris	0	1	0	0
S864686	28	13	SP Container Issues #13 (AG Debris)	LA-MHD01.001	Debris	0	0	0	0
S860078	28	16	SP PID in Matrix (AG Debris)	LA-MHD01.001	Debris	0	0	0	0
S861985	28	16	SP PID in Matrix (AG Debris)	LA-MHD01.001	Debris	0	0	0	0
S863658	28	16	SP PID in Matrix (AG Debris)	LA-MHD01.001	Debris	0	0	0	0
S861982	28	16	SP PID in Matrix (AG Debris)	LA-MHD01.001	Debris	0	0	0	0
S823193	28	16	SP PID in Matrix (AG Debris)	LA-MHD01.001	Debris	0	0	0	0
S863656	28	16	SP PID in Matrix (AG Debris)	LA-MHD01.001	Debris	0	0	0	0
S863655	28	16	SP PID in Matrix (AG Debris)	LA-MHD01.001	Debris	0	0	0	0

PKG_ID	WASTE_CD	Solution Package	Description	Waste Stream	Waste Type	Needs Remediation	Remediation Planned	Needs Characterization	CCP In Process
S863653	28	16	SP PID in Matrix (AG Debris)	LA-MHD01.001	Debris	0	0	0	0
S855584	28	16	SP PID in Matrix (AG Debris)	LA-MHD01.001	Debris	0	0	0	0
S860083	28	16	SP PID in Matrix (AG Debris)	LA-MHD01.001	Debris	0	0	0	0
S863021	28	16	SP PID in Matrix (AG Debris)	LA-MHD01.001	Debris	0	0	0	0
S870341	28	16	SP PID in Matrix (AG Debris)	LA-MHD01.001	Debris	0	0	0	0
S855839	28	16	SP PID in Matrix (AG Debris)	LA-MHD01.001	Debris	0	0	0	0
S863066	28	16	SP PID in Matrix (AG Debris)	LA-MHD01.001	Debris	0	0	0	0
S863065	28	16	SP PID in Matrix (AG Debris)	LA-MHD01.001	Debris	0	0	0	0
S852886	28	16	SP PID in Matrix (AG Debris)	LA-MHD01.001	Debris	0	0	0	0
S862508	28	16	SP PID in Matrix (AG Debris)	LA-MHD01.001	Debris	0	0	0	0
S853495	28	16	SP PID in Matrix (AG Debris)	LA-MHD01.001	Debris	0	0	0	0
S862507	28	16	SP PID in Matrix (AG Debris)	LA-MHD01.001	Debris	0	0	0	0
S862053	28	16	SP PID in Matrix (AG Debris)	LA-MHD01.001	Debris	0	0	0	0
S870256	28	16	SP PID in Matrix (AG Debris)	LA-MHD01.001	Debris	0	0	0	0
S863044	28	16	SP PID in Matrix (AG Debris)	LA-MHD01.001	Debris	0	0	0	0
S863690	28	16	SP PID in Matrix (AG Debris)	LA-MHD01.001	Debris	0	0	0	0
S862919	28	16	SP PID in Matrix (AG Debris)	LA-MHD01.001	Debris	0	0	0	0
S863661	28	16	SP PID in Matrix (AG Debris)	LA-MHD01.001	Debris	0	0	0	0
S863695	28	16	SP PID in Matrix (AG Debris)	LA-MHD01.001	Debris	0	0	0	0
S823075	28	16	SP PID in Matrix (AG Debris)	LA-MHD01.001	Debris	0	0	0	0
S862379	28	16	SP PID in Matrix (AG Debris)	LA-MHD01.001	Debris	0	0	0	0
S855201	28	21	SP No Issue (AG Debris)	LA-MHD01.001	Debris	0	0	0	0
S862364	28	21	SP No Issue (AG Debris)	LA-MHD01.001	Debris	0	0	0	1
S871832	28	21	SP No Issue (AG Debris)	LA-MHD01.001	Debris	0	0	0	0
S864254	28	21	SP No Issue (AG Debris)	LA-MHD01.001	Debris	0	0	0	1
S865306	28	21	SP No Issue (AG Debris)	LA-MHD01.001	Debris	0	0	0	0
S855909	28	21	SP No Issue (AG Debris)	LA-MHD01.001	Debris	0	0	0	0
S862264	28	56	SP AG Solids No Issues (Solids)	LA-MIN04-S.001	Solid	1	1	0	0
S863705	28	57	SP AG Cement Cans No Issues	LA-CIN01.001-Cans	Solid	0	0	1	0
S870359	28	72	SP Salt Waste (#72)	LA-MHD01.001	Debris	0	0	0	0
S870358	28	72	SP Salt Waste (#72)	LA-MHD01.001	Debris	0	0	0	0
S870029	28	72	SP Salt Waste (#72)	LA-MHD01.001	Debris	0	0	0	0
S870149	28	72	SP Salt Waste (#72)	LA-MHD01.001	Debris	0	0	0	0
S870147	28	72	SP Salt Waste (#72)	LA-MHD01.001	Debris	0	0	0	0
S870023	28	72	SP Salt Waste (#72)	LA-MHD01.001	Debris	0	0	0	0
S870227	28	72	SP Salt Waste (#72)	LA-MHD01.001	Debris	0	0	0	0
S870030	28	72	SP Salt Waste (#72)	LA-MHD01.001	Debris	0	0	0	0
S870234	28	72	SP Salt Waste (#72)	LA-MHD01.001	Debris	0	0	0	0
S870258	28	72	SP Salt Waste (#72)	LA-MHD01.001	Debris	0	0	0	0
S870018	28	72	SP Salt Waste (#72)	LA-MHD01.001	Debris	0	0	0	0
S870179	28	72	SP Salt Waste (#72)	LA-MHD01.001	Debris	0	0	0	0
S870212	28	72	SP Salt Waste (#72)	LA-MHD01.001	Debris	0	1	0	0
S860107	28	72	SP Salt Waste (#72)	LA-MHD01.001	Debris	0	1	0	0
S855200	28	72	SP Salt Waste (#72)	LA-MHD01.001	Debris	0	0	0	0
S855274	28	72	SP Salt Waste (#72)	LA-MHD01.001	Debris	0	0	0	0
S855583	28	72	SP Salt Waste (#72)	LA-MHD01.001	Debris	0	0	0	0
S855632	28	72	SP Salt Waste (#72)	LA-MHD01.001	Debris	0	0	0	0
S855633	28	72	SP Salt Waste (#72)	LA-MHD01.001	Debris	0	1	0	0
S855891	28	72	SP Salt Waste (#72)	LA-MHD01.001	Debris	0	0	0	0
S855892	28	72	SP Salt Waste (#72)	LA-MHD01.001	Debris	0	0	0	0
S861983	28	72	SP Salt Waste (#72)	LA-MHD01.001	Debris	0	0	0	0

PKG_ID	WASTE_CD	Solution Package	Description	Waste Stream	Waste Type	Needs Remediation	Remediation Planned	Needs Characterization	CCP In Process
S860079	28	72	SP Salt Waste (#72)	LA-MHD01.001	Debris	0	0	0	0
S853886	28	72	SP Salt Waste (#72)	LA-MHD01.001	Debris	0	0	0	0
S860109	28	72	SP Salt Waste (#72)	LA-MHD01.001	Debris	0	0	0	0
S860169	28	72	SP Salt Waste (#72)	LA-MHD01.001	Debris	0	0	0	0
S860170	28	72	SP Salt Waste (#72)	LA-MHD01.001	Debris	0	0	0	0
S861745	28	72	SP Salt Waste (#72)	LA-MHD01.001	Debris	0	0	0	0
S861748	28	72	SP Salt Waste (#72)	LA-MHD01.001	Debris	0	0	0	0
S861749	28	72	SP Salt Waste (#72)	LA-MHD01.001	Debris	0	0	0	0
S860081	28	72	SP Salt Waste (#72)	LA-MHD01.001	Debris	0	1	0	0
S860005	28	72	SP Salt Waste (#72)	LA-MHD01.001	Debris	0	0	0	0
S853733	28	72	SP Salt Waste (#72)	LA-MHD01.001	Debris	0	1	0	0
S853290	28	72	SP Salt Waste (#72)	LA-MHD01.001	Debris	0	0	0	0
S853321	28	72	SP Salt Waste (#72)	LA-MHD01.001	Debris	0	0	0	0
S853322	28	72	SP Salt Waste (#72)	LA-MHD01.001	Debris	0	1	0	0
S853468	28	72	SP Salt Waste (#72)	LA-MHD01.001	Debris	0	0	0	0
S853470	28	72	SP Salt Waste (#72)	LA-MHD01.001	Debris	0	0	0	0
S853472	28	72	SP Salt Waste (#72)	LA-MHD01.001	Debris	0	0	0	0
S853572	28	72	SP Salt Waste (#72)	LA-MHD01.001	Debris	0	0	0	0
S855129	28	72	SP Salt Waste (#72)	LA-MHD01.001	Debris	0	0	0	0
S853732	28	72	SP Salt Waste (#72)	LA-MHD01.001	Debris	0	1	0	0
S854600	28	72	SP Salt Waste (#72)	LA-MHD01.001	Debris	0	1	0	0
S853738	28	72	SP Salt Waste (#72)	LA-MHD01.001	Debris	0	1	0	0
S853772	28	72	SP Salt Waste (#72)	LA-MHD01.001	Debris	0	0	0	0
S853816	28	72	SP Salt Waste (#72)	LA-MHD01.001	Debris	0	0	0	0
S853830	28	72	SP Salt Waste (#72)	LA-MHD01.001	Debris	0	0	0	0
S853843	28	72	SP Salt Waste (#72)	LA-MHD01.001	Debris	0	0	0	0
S853844	28	72	SP Salt Waste (#72)	LA-MHD01.001	Debris	0	0	0	0
S853845	28	72	SP Salt Waste (#72)	LA-MHD01.001	Debris	0	0	0	0
S861984	28	72	SP Salt Waste (#72)	LA-MHD01.001	Debris	0	0	0	0
S853711	28	72	SP Salt Waste (#72)	LA-MHD01.001	Debris	0	0	0	0
S863780	28	72	SP Salt Waste (#72)	LA-MHD01.001	Debris	0	1	0	0
S861949	28	72	SP Salt Waste (#72)	LA-MHD01.001	Debris	0	0	0	0
S863629	28	72	SP Salt Waste (#72)	LA-MHD01.001	Debris	0	0	0	0
S863649	28	72	SP Salt Waste (#72)	LA-MHD01.001	Debris	0	0	0	0
S863659	28	72	SP Salt Waste (#72)	LA-MHD01.001	Debris	0	0	0	0
S863691	28	72	SP Salt Waste (#72)	LA-MHD01.001	Debris	0	1	0	0
S863706	28	72	SP Salt Waste (#72)	LA-MHD01.001	Debris	0	0	0	0
S863709	28	72	SP Salt Waste (#72)	LA-MHD01.001	Debris	0	0	0	0
S863030	28	72	SP Salt Waste (#72)	LA-MHD01.001	Debris	0	1	0	0
S863778	28	72	SP Salt Waste (#72)	LA-MHD01.001	Debris	0	0	0	0
S863025	28	72	SP Salt Waste (#72)	LA-MHD01.001	Debris	0	0	0	0
S864174	28	72	SP Salt Waste (#72)	LA-MHD01.001	Debris	0	0	0	0
S864225	28	72	SP Salt Waste (#72)	LA-MHD01.001	Debris	0	0	0	0
S864240	28	72	SP Salt Waste (#72)	LA-MHD01.001	Debris	0	0	0	0
S864255	28	72	SP Salt Waste (#72)	LA-MHD01.001	Debris	0	0	0	0
S864329	28	72	SP Salt Waste (#72)	LA-MHD01.001	Debris	0	0	0	0
S864331	28	72	SP Salt Waste (#72)	LA-MHD01.001	Debris	0	0	0	0
S864611	28	72	SP Salt Waste (#72)	LA-MHD01.001	Debris	0	0	0	0
S863711	28	72	SP Salt Waste (#72)	LA-MHD01.001	Debris	0	0	0	0
S862458	28	72	SP Salt Waste (#72)	LA-MHD01.001	Debris	0	0	0	0
S862000	28	72	SP Salt Waste (#72)	LA-MHD01.001	Debris	0	0	0	0

PKG_ID	WASTE_CD	Solution Package	Description	Waste Stream	Waste Type	Needs Remediation	Remediation Planned	Needs Characterization	CCP In Process
S862001	28	72	SP Salt Waste (#72)	LA-MHD01.001	Debris	0	0	0	0
S862045	28	72	SP Salt Waste (#72)	LA-MHD01.001	Debris	0	0	0	0
S862058	28	72	SP Salt Waste (#72)	LA-MHD01.001	Debris	0	1	0	0
S862059	28	72	SP Salt Waste (#72)	LA-MHD01.001	Debris	0	0	0	0
S862227	28	72	SP Salt Waste (#72)	LA-MHD01.001	Debris	0	0	0	0
S863070	28	72	SP Salt Waste (#72)	LA-MHD01.001	Debris	0	1	0	0
S862256	28	72	SP Salt Waste (#72)	LA-MHD01.001	Debris	0	0	0	0
S864687	28	72	SP Salt Waste (#72)	LA-MHD01.001	Debris	0	0	0	0
S862525	28	72	SP Salt Waste (#72)	LA-MHD01.001	Debris	0	0	0	0
S862883	28	72	SP Salt Waste (#72)	LA-MHD01.001	Debris	0	0	0	0
S862884	28	72	SP Salt Waste (#72)	LA-MHD01.001	Debris	0	0	0	0
S862901	28	72	SP Salt Waste (#72)	LA-MHD01.001	Debris	0	0	0	0
S862923	28	72	SP Salt Waste (#72)	LA-MHD01.001	Debris	0	0	0	0
S862952	28	72	SP Salt Waste (#72)	LA-MHD01.001	Debris	0	0	0	0
S862964	28	72	SP Salt Waste (#72)	LA-MHD01.001	Debris	0	0	0	0
S863016	28	72	SP Salt Waste (#72)	LA-MHD01.001	Debris	0	0	0	0
S862233	28	72	SP Salt Waste (#72)	LA-MHD01.001	Debris	0	0	0	0
S864549	28	76	AG Governors Goal Miscellaneous Solids	LA-MIN04-S.001	Solid	0	0	0	0

Attachment F

Email Correspondence Confirming 707 Nitrate Salt-Bearing Waste Containers, May 23, 2014

From: Christensen, Davis V
Sent: Friday, May 23, 2014 7:36 AM
To: Simmons, Craig E (craigs@lanl.gov)
Cc: Clemmons, James S (jsclemmons@lanl.gov); Criswell, Charles W (bcriswell@lanl.gov)
Subject: Final number 707

Craig,

Here is our final list.

We have settled on 707. We reviewed several additional drums as part of our broad sweep, but with your help we have determined that all of these containers are concrete.

Please review and let us know if you agree.

Also attached it a list of all the drums that we reviewed and their final determination.

Thanks tons for you help
Davis

Davis Christensen
TA-46 Bldg 326
ph. (505) 665-8686
cell (505) 699-1724
dvc@lanl.gov

	OriginalID	PKG_ID	Code	Issue	Resolution	Description	Group	GG Stretch Status	Container	NCR Issues	Overpacked Into	LOC	HIST_DATE	Remed Date	ShipDate	EMT
1	S825018	88327	66A	Disposition 5/2/11 Prior to Nitrate Issues	Not part of our Nitrate Tracking Inventory	SP AG Debris Drums Dispositioned PreFY2010	Inactive	NA	55 gal drum			Waste Isolation Pilot Plant	2/23/2011	2/23/2011	5/2/2011	0
2	S825018	88328	X04	On-Site	Managed as Empty	AG No Waste Stream Suspect TRU	Active	NA	85 gal drum			Dome 229	2/23/2011			1
3	S825019	89308	21	Disposition 12/14/11 Prior to Nitrate Issues	Not part of our Nitrate Tracking Inventory	SP No Issue (AG Debris)	Inactive	Dispositioned	55 gal drum			Waste Isolation Pilot Plant	6/14/2011	6/14/2011	12/14/2011	0
4	S825019	89309	21	Disposition 1/9/12 Prior to Nitrate Issues	Not part of our Nitrate Tracking Inventory	SP No Issue (AG Debris)	Inactive	Dispositioned	POC			Waste Isolation Pilot Plant	6/14/2011	6/14/2011	1/9/2012	0
5	S825019	89310	X04	On-Site	Managed as Empty	AG No Waste Stream Suspect TRU	Active	NA	85 gal drum			Dome 229	6/14/2011			1
6	S864332	87822	66A	Disposition 5/12/11 Prior to Nitrate Issues	Not part of our Nitrate Tracking Inventory	SP AG Debris Drums Dispositioned PreFY2010	Inactive	NA	55 gal drum			Waste Isolation Pilot Plant	12/16/2010	12/16/2010	5/12/2011	0
7	S864332	87823	56	On-site - Solids in a POC	RTR Video was reviewed and the waste matrix was determined to be Cemented	SP AG Solids No Issues (Solids)	Active	Remediation Planned	POC	bags, >50% Homo, liquids		Dome 232	12/20/2010	12/16/2010		0
8	S864332	87824	56	Disposition 10/2/12 Prior to Nitrate Issues	Not part of our Nitrate Tracking Inventory	SP AG Solids No Issues (Solids)	Inactive	Dispositioned	POC			Waste Isolation Pilot Plant	12/20/2010	12/16/2010	10/2/2012	0
9	S864332	87825	56	On-site - Solids in a POC	waste matrix was determined to be Cemented	SP AG Solids No Issues (Solids)	Active	Remediation Planned	POC	metal, solids, liquids,		Dome 232	12/20/2010	12/16/2010		0
10	S864332	87826	21	On-site - Solids in a POC	RTR Video was reviewed and the waste matrix was determined to be Cemented	SP No Issue (AG Debris)	Active	Remediation Planned	POC	absorbent, cloth material, impenetrable		Dome 153	12/20/2010	12/16/2010		0
11	S864332	87827	21	On-site - Solids in a POC	RTR Video was reviewed and the waste matrix was determined to be Cemented	SP No Issue (AG Debris)	Active	Remediation Planned	POC	plastic, absorbent, impenetrable, cloth material		Dome 153	12/20/2010	12/16/2010		0
12	S864332	87828	X04	Dispositioned in SWB as Suspect empty TRU Carcass	Not part of our Nitrate Tracking Inventory	AG No Waste Stream Suspect TRU	Inactive	NA	SWB-55 gal drum		SB10170	Waste Isolation Pilot Plant	12/20/2010		11/26/2013	1
	S855943	68383		Nitrate Salt Drum	Added to Nitrate Tracking Inventory - Already Dispositioned											
	S855943	68384		Nitrate Salt Drum	Added to Nitrate Tracking Inventory - Already Dispositioned											
	S824181	93515		Nitrate Salt Drum	Added to Nitrate Tracking Inventory - Already Dispositioned											
	S824181	93516		Nitrate Salt Drum	Added to Nitrate Tracking Inventory - Already Dispositioned											
	S852927	S852927		Suspect Nitrate/ Cemented Drum	RTR Video was reviewed and the waste matrix was determined to be Cemented											
	S855136	S855136		Suspect Nitrate/ Cemented Drum	RTR Video was reviewed and the waste matrix was determined to be Cemented											
	S851594	S851594		Suspect Nitrate/ Cemented Drum	RTR Video was reviewed and the waste matrix was determined to be Cemented											

PKG_ID	Related to	Intermedia	ParentID	Overpacke	Empty P	Empty Dau	C_ID	Salt Type	WasteLok	3706	Waste Stre	Type	RemedDate	Days Since	WasteGenDate	FGA_Date	HSG_BDR	Location	PECi	FGE	Shipment	Ship Date	Location C	Specific Lo
68408			S842463	SB02198	68420		733271	Nitrate	No	GovGoal	LA-MHD01	Remediatic	9/19/2013	245	2/13/1984	12/20/2013	LA13FG12	LANL/54-G	4.261033	18.94953			LANL	::
68430	1		S833846		68641		796627	Nitrate	No	GovGoal	LA-MIN02-	Remediatic	11/13/2013	190	9/21/1983	1/22/2014	LA14FG20	LANL/54-G	11.23194	33.11182			LANL	::
68507	1		S853279		69003		739341	Nitrate	No	GovGoal	LA-MIN02-	Remediatic	11/19/2013	184	7/9/1985	1/22/2014	LA14FG20	LANL/54-G	4.770073	36.57127			LANL	::
68540	1		S842181		68589		796977	Nitrate	No	GovGoal	LA-MHD01	Remediatic	11/5/2013	198	9/23/1984	1/21/2014	LA14FG20	LANL/54-G	0.034518	0.380187			LANL	::
68553	1		S842181		68589		797034	Nitrate	No	GovGoal	LA-MHD01	Remediatic	11/5/2013	198	9/23/1984	1/21/2014	LA14FG20	LANL/54-G	1.867853	2.782377			LANL	::
68624			S824184		68644		797419	Nitrate	No	GovGoal	LA-MIN02-	Remediatic	11/12/2013	191	12/28/1982	11/25/2013	LA13FG21	LANL/54-G	0.949019	10.61336			LANL	::
68631			S825810		68515		797248	Nitrate	No	GovGoal	LA-MIN02-	Remediatic	11/12/2013	191	12/27/1982	12/13/2013	LA13FG21	LANL/54-G	1.516163	2.256183			LANL	::
68638	1		S825810		68515		797249	Nitrate	No	GovGoal	LA-MHD01	Remediatic	11/12/2013	191	12/27/1982	1/21/2014	LA14FG20	LANL/54-G	0.049297	0.543579			LANL	::
68648		68818	S855139	SB50442		69219	797473	Nitrate	No	GovGoal	LA-MIN02-	Remediatic	1/11/2014	131	10/9/1985	1/24/2014	LA14FG20	LANL/54-G	16.69764	62.36824			LANL	::
68665	1		S853492	SB50529	68674		797714	Nitrate	No	GovGoal	LA-MIN02-	Remediatic	11/15/2013	188	7/8/1985	4/4/2014	LA14FG20	LANL/54-G	10.10021	47.11176			LANL	::
68685	1	68725	S855793			69120	730964	Nitrate	No	GovGoal	LA-MIN02-	Remediatic	12/4/2013	169	12/16/1985	1/10/2014	LA14FG20	LANL/54-G	8.535551	21.93594			LANL	::
69013			S870213		69530		730957	Nitrate	No	GovGoal	LA-MIN02-	Remediatic	3/1/2014	82	4/13/1987	3/26/2014	LA14FG20	LANL/54-G	0.672967	3.561096			LANL	::
69036		68734	S873554			69121	797288	Nitrate	No	GovGoal	LA-MHD01	Remediatic	12/6/2013	167	10/13/1987	2/5/2014	LA14FG20	LANL/54-G	10.30922	22.0473			LANL	::
69076		68755	S852530	SB50452		68691	797835	Nitrate	No	GovGoal	LA-MIN02-	Remediatic	12/23/2013	150	3/17/1985	4/4/2014	LA14FG20	LANL/54-G	9.969209	56.00362			LANL	::
69079		68826	S901114	SB50073		69220	797845	Nitrate	No	GovGoal	LA-MIN02-	Remediatic	1/11/2014	131	6/12/1990	1/24/2014	LA14FG20	LANL/54-G	21.08892	58.3296			LANL	::
69183		68742	S870478	SB50443		69218	798004	Nitrate	No	GovGoal	LA-MIN02-	Remediatic	1/11/2014	131	10/13/1987	1/24/2014	LA14FG20	LANL/54-G	15.06886	46.81467			LANL	::
69208		68760	S851772	SB50069		69223	798017	Nitrate	No	GovGoal	LA-MIN02-	Remediatic	1/12/2014	130	3/20/1985	2/5/2014	LA14FG20	LANL/54-G	39.11777	157.3569			LANL	::
69280			S841251	SB50431	69248		798728	Nitrate	No	GovGoal	LA-MIN02-	Remediatic	1/26/2014	116	9/23/1984	4/4/2014	LA14FG20	LANL/54-G	18.05877	69.34543			LANL	::
69298			S841251		69248		798646	Nitrate	No	GovGoal	LA-MIN02-	Remediatic	1/26/2014	116	9/23/1984	4/4/2014	LA14FG20	LANL/54-G	23.18251	122.4417			LANL	::
69361		68966	S892963	SB50451		69529	730996	Nitrate	No	GovGoal	LA-MIN02-	Remediatic	3/1/2014	82	2/27/1989	4/8/2014	LA14FG12	LANL/54-G	4.935412	17.33852			LANL	::
69417			S822876		69527		799582	Nitrate	No	GovGoal	LA-MHD01	Remediatic	2/27/2014	84	3/9/1982	4/11/2014	LA14FG20	LANL/54-G	0.008709	0.062508			LANL	::
69445		68962	S823229			69528	799717	Nitrate	No	GovGoal	LA-MIN02-	Remediatic	2/28/2014	83	5/16/1982	3/13/2014	LA14FG20	LANL/54-G	5.149856	57.59341			LANL	::
69490		68966	S892963	SB50522		69529	799976	Nitrate	No	GovGoal	LA-MIN02-	Remediatic	3/1/2014	82	2/27/1989	3/14/2014	LA14FG20	LANL/54-G	18.89889	75.98083			LANL	::
69491		68973	S891387	SB50448		69504	799975	Nitrate	No	GovGoal	LA-MIN02-	Remediatic	2/28/2014	83	12/5/1989	3/14/2014	LA14FG20	LANL/54-G	12.06004	14.36092			LANL	::
69568		68981; 687	S825664		69572		800744	Nitrate	No	GovGoal	LA-MHD01	Remediatic	3/18/2014	65	12/28/1982	4/2/2014	LA14FG20	LANL/54-G	4.523135	5.183186			LANL	::
69559			S832148		69590		800411	Nitrate	No	GovGoal	LA-MIN02-	Remediatic	3/17/2014	66	1/25/1983	4/4/2014	LA14FG20	LANL/54-G	14.0246	22.39192			LANL	::
70072							799293	Nitrate	No	Non-GovG	LA-CIN01.0	Daughter		41781	5/4/1981			LANL/54-G	4.711045	49.55961			LANL	
93605			S824541		93608		790773	Nitrate	No	GovGoal	LA-MIN02-	Remediatic	5/2/2013	385	10/4/1982	1/14/2014	LA14FG20	LANL/54-G	14.7637	21.26044			LANL	::
S793724							752676	Nitrate	No	Non-GovG	LA-CIN01.0	Original		41781	12/18/1979			LANL/54-G	1.354934	9.450591			LANL	::
S801676							762652	Nitrate	No	Non-GovG	LA-CIN01.0	Original		41781	5/19/1980			LANL/54-G	1.249718	11.26829			LANL	::
S802739							776389	Nitrate	No	Non-GovG	LA-CIN01.0	Original		41781	3/31/1980			LANL/54-G	0.633025	6.003837			LANL	::
S802833							756875	Nitrate	No	Non-GovG	LA-CIN01.0	Original		41781	5/19/1980			LANL/54-G	0.422645	4.222052			LANL	::
S803078							771330	Nitrate	No	Non-GovG	LA-CIN01.0	Original		41781	9/17/1980			LANL/54-G	1.746727	15.27077			LANL	::
S804948							750766	Nitrate	No	Non-GovG	LA-CIN01.0	Original		41781	9/17/1980			LANL/54-G	0.480508	4.346182			LANL	::
S804995							754357	Nitrate	No	Non-GovG	LA-CIN01.0	Original		41781	12/1/1980			LANL/54-G	1.099085	12.26459			LANL	::
S805051							776564	Nitrate	No	Non-GovG	LA-CIN01.0	Original		41781	9/17/1980			LANL/54-G	0.607081	6.217189			LANL	::
S805289							751672	Nitrate	No	Non-GovG	LA-CIN01.0	Original		41781	12/1/1980			LANL/54-G	0.265394	0.227617			LANL	::
S813385							771804	Nitrate	No	Non-GovG	LA-CIN01.0	Original		41781	6/1/1981			LANL/54-G	4.097065	45.81953			LANL	::
S813545							755434	Nitrate	No	Non-GovG	LA-CIN01.0	Original		41781	2/9/1981			LANL/54-G	1.025111	11.46433			LANL	::
S816434							771438	Nitrate	No	Non-GovG	LA-CIN01.0	Original		41781	8/3/1981			LANL/54-G	3.476426	38.87861			LANL	::
S816810							772839	Nitrate	No	Non-GovG	LA-CIN01.0	Original		41781	9/28/1981			LANL/54-G	2.141075	22.34632			LANL	::
S818435							769707	Nitrate	No	Non-GovG	LA-CIN01.0	Original		41781	12/28/1981			LANL/54-G	1.815476	20.30338			LANL	::
S822599							748612	Nitrate	No	Non-GovG	LA-CIN01.0	Original		41781	2/9/1982			LANL/54-G	5.235326	58.54928			LANL	::
S822713							760417	Nitrate	No	Non-GovG	LA-CIN01.0	Original		41781	2/8/1982			LANL/54-G	1.277223	11.0408			LANL	::
S822844							751719	Nitrate	No	Non-GovG	LA-CIN01.0	Original		41781	3/9/1982			LANL/54-G	8.610488	95.63058			LANL	::
S823124							769910	Nitrate	No	Non-GovG	LA-CIN01.0	Original		41781	5/17/1982			LANL/54-G	2.702104	30.21898			LANL	::
S823184							760424	Nitrate	No	Non-GovG	LA-CIN01.0	Original		41781	5/16/1982			LANL/54-G	14.18605	158.6497			LANL	::
S825878							770204	Nitrate	No	Non-GovG	LA-CIN01.0	Original		41781	12/28/1982			LANL/54-G	16.66016	186.3189			LANL	::
S825879							754400	Nitrate	No	Non-GovG	LA-CIN01.0	Original		41781	12/28/1982			LANL/54-G	4.661129	52.12774			LANL	::
S853714							760120	Nitrate	No	Non-GovG	LA-CIN01.0	Original		41781	7/8/1985			LANL/54-G	6.860811	76.72789			LANL	::
S862888							758203	Nitrate	No	Non-GovG	LA-CIN01.0	Original		41781	7/7/1986			LANL/54-G	1.810573	19.38008			LANL	::
S864213							770113	Nitrate	No	Non-GovG	LA-CIN01.0	Original		41781	9/30/1986			LANL/54-G	5.483659	61.05478			LANL	::
68311			S845031	SB50086	68352		733202	Nitrate	No	GovGoal	LA-MIN02-	Remediatic	9/6/2013	258	7/25/1984	1/28/2014	LA14FG12	LANL/54-G	5.399595	31.99224	LW140028	########	WCS	::
68313			S845031	SB50103	68352		733203	Nitrate	No	GovGoal	LA-MIN02-	Remediatic	9/6/2013	258	7/25/1984	1/28/2014	LA14FG12	WCS/OPER	14.299	112.3191	LW140032	########	WCS	::
68314			S845031	SB50012	68352		729231	Nitrate	No	GovGoal	LA-MIN02-	Remediatic	9/6/2013	258	7/25/1984	1/28/2014	LA14FG12	LANL/54-G	1.822927	9.96342	LW140021	########	WCS	::
68315			S842213	SB02204	68370		733204	Nitrate	No	GovGoal	LA-MIN02-	Remediatic	9/9/2013	255	5/9/1984	12/20/2013	LA13FG12	WCS/OPER	17.4332	185.932	LW140005	4/3/2014	WCS	::
68325			S832143	SB50045	68355		729241	Nitrate	No	GovGoal	LA-MIN02-	Remediatic	9/5/2013	259	1/25/1983	1/22/2014	LA14FG20	LANL/54-G	11.80496	54.23744	LW140021	########	WCS	::
68341			S852513	SB50020	68388		733213	Nitrate	No	GovGoal	LA-MIN02-	Remediatic	9/12/2013	252	3/17/1985	1/22/2014	LA14FG20	LANL/54-G	13.06007	62.00641	LW140009	4/8/2014	WCS	::
68342			S845031	SB50019	68352		733214	Nitrate	No	GovGoal	LA-MIN02-	Remediatic	9/6/2013	258	7/25/1984	2/4/2014	LA14FG12	LANL/54-G	2.571431	14.9613	LW140009	4/8/2014	WCS	::
68347			S825020	SB50026	68360		733248	Nitrate	No	GovGoal	LA-MIN02-	Remediatic	9/13/2013	251	11/9/1982	11/5/2013	LA13FG21	LANL/54-G	6.687803	13.23248	LW140010	4/8/2014	WCS	::
68350			S835283	SB50067	68403		738147	Nitrate	No	GovGoal	LA-MIN02-	Remediatic	9/17/2013	247	12/29/1983	11/5/2013	LA13FG21	LANL/54-G	11.7861	34.35866	LW140027	########	WCS	::
68396			S842463	SB50109	68420		733250	Nitrate	No	GovGoal	LA-MHD01	Remediatic	9/19/2013	245	2/13/1984	1/22/2014	LA14FG20	LANL/54-G	3.694242	15.58212	LW140027	########	WCS	::
68425	1		S824208	SB50036	68532		733279	Nitrate	No	GovGoal	LA-MIN02-	Remediatic	10/31/2013	203	9/1/1982	12/18/2013	LA13FG21	LANL/54-G	2.872841	0.746961	LW140022	########	WCS	::

PKG_ID	Related to	Intermedia	ParentID	Overpacke	Empty P	Empty Dau	C_ID	Salt Type	WasteLok	3706	Waste Stre	Type	RemedDate	Days Since	WasteGenDate	FGA_Date	HSG_BDR	Location	PECi	FGE	Shipment	Ship Date	Location C	Specific Lo
68426	1		S910170	SB02166	68522		738233	Nitrate	No	GovGoal	LA-MIN02-	Remediatic	10/2/2013	232	1/2/1991	11/13/2013	LA13FG21	WCS/OPER	15.47407	147.0752	LW140002	4/2/2014	WCS	::
68428	1		S825902	SB50028	68518		738185	Nitrate	No	GovGoal	LA-MIN02-	Remediatic	10/29/2013	205	12/28/1982	1/22/2014	LA14FG20	WCS/OPER	6.748229	9.400178	LW140034	########	WCS	::
68429			S832320	SB50017	68365		738178	Nitrate	No	GovGoal	LA-MIN02-	Remediatic	10/30/2013	204	11/8/1983	12/18/2013	LA13FG21	LANL/54-G	4.18191	9.69294	LW140008	4/8/2014	WCS	::
68431	1		S833846	SB50048	68641		796628	Nitrate	No	GovGoal	LA-MIN02-	Remediatic	11/13/2013	190	9/21/1983	2/26/2014	LA14FG20	WCS/OPER	12.33601	45.26936	LW140015	########	WCS	::
68433	1		S825810	SB50017	68515		796626	Nitrate	No	GovGoal	LA-MIN02-	Remediatic	11/12/2013	191	12/27/1982	1/22/2014	LA14FG20	LANL/54-G	1.046854	9.012603	LW140008	4/8/2014	WCS	::
68449			S821203	SB50072	68460		738560	Nitrate	No	GovGoal	LA-MIN02-	Remediatic	9/24/2013	240	6/14/1982	1/10/2014	LA14FG20	WCS/OPER	13.07802	67.98737	LW140032	########	WCS	::
68508	1		S832144	SB50094	68640		739405	Nitrate	No	GovGoal	LA-MIN02-	Remediatic	11/14/2013	189	12/29/1983	12/18/2013	LA13FG21	LANL/54-G	7.885418	35.78009	LW140020	########	WCS	::
68509			S842526	SB50018	69142		739481	Nitrate	No	GovGoal	LA-MIN02-	Remediatic	12/15/2013	158	3/12/1984	1/22/2014	LA14FG20	LANL/54-G	5.52554	14.18244	LW140009	4/8/2014	WCS	::
68546			S851426	SB50083	68529		796976	Nitrate	No	GovGoal	LA-MIN02-	Remediatic	10/24/2013	210	2/11/1985	1/14/2014	LA14FG20	LANL/54-G	47.44124	146.6064	LW140021	########	WCS	::
68583	1		S842181	SB50037	68589		796596	Nitrate	No	GovGoal	LA-MIN02-	Remediatic	11/5/2013	198	9/23/1984	12/18/2013	LA13FG21	WCS/OPER	5.692897	2.101563	LW140011	4/9/2014	WCS	::
68617	1		S833481	SB50039	68599		797188	Nitrate	No	GovGoal	LA-MIN02-	Remediatic	11/8/2013	195	7/12/1983	12/18/2013	LA13FG21	LANL/54-G	2.485734	28.85471	LW140022	########	WCS	::
68619	1		S825810	SB50079	68515		797241	Nitrate	No	GovGoal	LA-MIN02-	Remediatic	11/12/2013	191	12/27/1982	1/22/2014	LA14FG20	WCS/OPER	4.56259	35.27618	LW140031	########	WCS	::
68620			S824184	SB50002	68644		797189	Nitrate	No	GovGoal	LA-MIN02-	Remediatic	11/12/2013	191	12/28/1982	12/18/2013	LA13FG21	WCS/OPER	0.949019	10.61336	LW140012	4/9/2014	WCS	::
68625	1		S870381	SB50013	68639		797420	Nitrate	No	GovGoal	LA-MIN02-	Remediatic	11/11/2013	192	7/6/1987	11/25/2013	LA13FG21	LANL/54-G	2.029956	22.70201	LW140008	4/8/2014	WCS	::
68628			S824184	SB50082	68644		797415	Nitrate	No	GovGoal	LA-MIN02-	Remediatic	11/12/2013	191	12/28/1982	11/25/2013	LA13FG21	LANL/54-G	0.949019	10.61336	LW140020	########	WCS	::
68632	1		S833481	SB50013	68599		797247	Nitrate	No	GovGoal	LA-MIN02-	Remediatic	11/8/2013	195	7/12/1983	11/21/2013	LA13FG21	LANL/54-G	2.48474	28.84317	LW140008	4/8/2014	WCS	::
68656		68724	S891279	SB02206		69100	797075	Nitrate	No	GovGoal	LA-MIN02-	Remediatic	11/20/2013	183	12/5/1989	12/6/2013	LA13FG12	WCS/OPER	34.44809	160.1152	LW140005	4/3/2014	WCS	::
68661			S861976	SB50046	69119		797071	Nitrate	No	GovGoal	LA-MIN02-	Remediatic	12/4/2013	169	4/7/1986	12/20/2013	LA13FG12	WCS/OPER	3.201198	16.51158	LW140014	########	WCS	::
68679			S864663	SB50102	69008		797718	Nitrate	No	GovGoal	LA-MIN02-	Remediatic	11/21/2013	182	12/15/1986	12/13/2013	LA13FG21	LANL/54-G	18.76655	35.56955	LW140027	########	WCS	::
68681		68738	S864694	SB50058		69139	730960	Nitrate	No	GovGoal	LA-MIN02-	Remediatic	12/15/2013	158	12/15/1986	1/16/2014	LA14FG12	LANL/54-G	11.34507	78.16387	LW140025	########	WCS	::
68686			S861976	SB50062	69119		730967	Nitrate	No	GovGoal	LA-MIN02-	Remediatic	12/4/2013	169	4/7/1986	1/10/2014	LA14FG20	LANL/54-G	8.993328	43.70936	LW140025	########	WCS	::
69014		68973	S891387	SB50095		69504	730959	Nitrate	No	GovGoal	LA-MIN02-	Remediatic	2/28/2014	83	12/5/1989	3/19/2014	LA14FG20	LANL/54-G	3.645207	11.7972	LW140022	########	WCS	::
69033		68734	S873554	SB50063		69121	797287	Nitrate	No	GovGoal	LA-MIN02-	Remediatic	12/6/2013	167	10/13/1987	1/3/2014	LA14FG20	LANL/54-G	2.76054	30.41747	LW140018	########	WCS	::
69034		68734	S873554	SB50027		69121	797289	Nitrate	No	GovGoal	LA-MIN02-	Remediatic	12/6/2013	167	10/13/1987	1/3/2014	LA14FG20	WCS/OPER	3.931501	43.35908	LW140014	########	WCS	::
69041		68722	S823166	SB50104		68689	797583	Nitrate	No	GovGoal	LA-MIN02-	Remediatic	12/16/2013	157	5/17/1982	1/16/2014	LA14FG12	LANL/54-G	12.23001	33.94927	LW140026	########	WCS	::
69043			S851436	SB50039	69173		797843	Nitrate	No	GovGoal	LA-MIN02-	Remediatic	1/14/2014	128	2/11/1985	1/28/2014	LA14FG12	LANL/54-G	11.28696	78.81088	LW140022	########	WCS	::
69045		68755	S852530	SB50071		68691	797586	Nitrate	No	GovGoal	LA-MIN02-	Remediatic	12/23/2013	150	3/17/1985	1/28/2014	LA14FG12	LANL/54-G	9.014514	83.32642	LW140020	########	WCS	::
69060			S842526	SB50100	69142		798048	Nitrate	No	GovGoal	LA-MIN02-	Remediatic	12/15/2013	158	3/12/1984	1/21/2014	LA14FG12	LANL/54-G	11.77115	68.80194	LW140025	########	WCS	::
69061		68738	S864694	SB50035		69139	798042	Nitrate	No	GovGoal	LA-MIN02-	Remediatic	12/15/2013	158	12/15/1986	1/10/2014	LA14FG20	WCS/OPER	12.27718	70.89345	LW140016	########	WCS	::
69063		68735	S860014	SB50107		69143	798045	Nitrate	No	GovGoal	LA-MIN02-	Remediatic	12/15/2013	158	2/19/1986	1/21/2014	LA14FG12	WCS/OPER	14.41418	102.9231	LW140030	########	WCS	::
69064		68723	S861995	SB50089		69005	798054	Nitrate	No	GovGoal	LA-MIN02-	Remediatic	12/16/2013	157	4/8/1986	1/10/2014	LA14FG20	LANL/54-G	6.110867	34.00226	LW140021	########	WCS	::
69066		68735	S860014	SB50033		69143	798041	Nitrate	No	GovGoal	LA-MIN02-	Remediatic	12/15/2013	158	2/19/1986	1/21/2014	LA14FG12	LANL/54-G	15.21867	106.9687	LW140018	########	WCS	::
69067			S842526	SB50015	69142		798047	Nitrate	No	GovGoal	LA-MIN02-	Remediatic	12/15/2013	158	3/12/1984	1/21/2014	LA14FG12	LANL/54-G	17.04091	107.8083	LW140019	########	WCS	::
69068		68722	S823166	SB50012		68689	798046	Nitrate	No	GovGoal	LA-MIN02-	Remediatic	12/16/2013	157	5/17/1982	1/10/2014	LA14FG20	LANL/54-G	2.319915	11.76874	LW140021	########	WCS	::
69069		68723	S861995	SB50058		69005	798043	Nitrate	No	GovGoal	LA-MIN02-	Remediatic	12/16/2013	157	4/8/1986	1/10/2014	LA14FG20	LANL/54-G	3.036631	19.1108	LW140025	########	WCS	::
69073		68756	S844684	SB50062		69153	797812	Nitrate	No	GovGoal	LA-MIN02-	Remediatic	12/23/2013	150	5/9/1984	1/28/2014	LA14FG12	LANL/54-G	13.62528	62.9976	LW140025	########	WCS	::
69074		68758	S900215	SB50087		69152	797837	Nitrate	No	GovGoal	LA-MIN02-	Remediatic	12/22/2013	151	6/12/1990	1/24/2014	LA14FG20	LANL/54-G	11.20542	95.7884	LW140035	########	WCS	::
69077		68756	S844684	SB50032		69153	797811	Nitrate	No	GovGoal	LA-MIN02-	Remediatic	12/23/2013	150	5/9/1984	1/31/2014	LA14FG20	WCS/OPER	1.257321	9.027957	LW140011	4/9/2014	WCS	::
69080		68758	S900215	SB50100		69152	797793	Nitrate	No	GovGoal	LA-MIN02-	Remediatic	12/22/2013	151	6/12/1990	1/24/2014	LA14FG20	LANL/54-G	6.113626	19.9234	LW140025	########	WCS	::
69081		68758	S900215	SB50052		69152	797794	Nitrate	No	GovGoal	LA-MIN02-	Remediatic	12/22/2013	151	6/12/1990	1/24/2014	LA14FG20	WCS/OPER	18.21863	118.6294	LW140024	########	WCS	::
69083		68759	S851764	SB50098		69221	797844	Nitrate	No	GovGoal	LA-MIN02-	Remediatic	1/12/2014	130	3/20/1985	1/28/2014	LA14FG12	WCS/OPER	10.65778	57.48992	LW140023	########	WCS	::
69085			S844215	SB50021	69203		797838	Nitrate	No	GovGoal	LA-MIN02-	Remediatic	1/10/2014	132	5/9/1984	1/30/2014	LA14FG20	LANL/54-G	6.429041	47.73728	LW140010	4/8/2014	WCS	::
69087		68755	S852530	SB50018		68691	797841	Nitrate	No	GovGoal	LA-MIN02-	Remediatic	12/23/2013	150	3/17/1985	1/30/2014	LA14FG20	LANL/54-G	9.818973	68.61534	LW140009	4/8/2014	WCS	::
69091		68752	S823276	SB50062		69247	797849	Nitrate	No	GovGoal	LA-MIN02-	Remediatic	1/16/2014	126	6/14/1982	2/5/2014	LA14FG20	LANL/54-G	9.228374	32.06832	LW140025	########	WCS	::
69094		68826	S901114	SB50424		69220	797854	Nitrate	No	GovGoal	LA-MIN02-	Remediatic	1/11/2014	131	6/12/1990	2/26/2014	LA14FG20	LANL/54-G	9.649548	7.330886	LW140037	########	WCS	::
69097			S844215	SB50063	69203		797917	Nitrate	No	GovGoal	LA-MIN02-	Remediatic	1/10/2014	132	5/9/1984	1/28/2014	LA14FG12	LANL/54-G	11.2579	92.39367	LW140018	########	WCS	::
69099		68759	S851764	SB50432		69221	797948	Nitrate	No	GovGoal	LA-MIN02-	Remediatic	1/12/2014	130	3/20/1985	1/29/2014	LA14FG20	WCS/OPER	14.45134	65.60292	LW140036	########	WCS	::
69102		68756	S844684	SB50048		69153	797141	Nitrate	No	GovGoal	LA-MIN02-	Remediatic	12/23/2013	150	5/9/1984	1/22/2014	LA14FG20	WCS/OPER	3.797523	20.22079	LW140015	########	WCS	::
69103		68723	S861995	SB50019		69005	797150	Nitrate	No	GovGoal	LA-MIN02-	Remediatic	12/16/2013	157	4/8/1986	1/22/2014	LA14FG20	LANL/54-G	7.932326	65.7302	LW140009	4/8/2014	WCS	::
69105		68817	S853006	SB50045		69170	797164	Nitrate	No	GovGoal	LA-MIN02-	Remediatic	1/9/2014	133	4/15/1985	2/4/2014	LA14FG12	LANL/54-G	4.184437	19.46363	LW140021	########	WCS	::
69154		68756	S844684	SB50061		69153	797842	Nitrate	No	GovGoal	LA-MIN02-	Remediatic	12/23/2013	150	5/9/1984	1/21/2014	LA14FG12	LANL/54-G	1.716089	9.892714	LW140025	########	WCS	::
69158		68742	S870478	SB50055		69218	797947	Nitrate	No	GovGoal	LA-MIN02-	Remediatic	1/11/2014	131	10/13/1987	1/24/2014	LA14FG20	WCS/OPER	19.35845	90.17271	LW140023	########	WCS	::
69159		68761	S855566	SB50074		69205	797946	Nitrate	No	GovGoal	LA-MIN02-	Remediatic	1/10/2014	132	11/19/1985	2/19/2014	LA14FG20	WCS/OPER	26.28435	97.35754	LW140030	########	WCS	::
69161		68816	S855216	SB50035		69222	797914	Nitrate	No	GovGoal	LA-MIN02-	Remediatic	1/12/2014	130	10/9/1985	1/31/2014	LA14FG20	WCS/OPER	5.149713	7.955126	LW140016	########	WCS	::
69162			S841239	SB50066	69201		797858	Nitrate	No	GovGoal	LA-MIN02-	Remediatic	1/9/2014	133	9/23/1984	1/22/2014	LA14FG12	LANL/54-G	7.949301	35.32642	LW140019	########	WCS	::
69163		68818	S855139	SB50057		69219	797857	Nitrate	No	GovGoal	LA-MIN02-	Remediatic	1/11/2014	131	10/9/1985	1/29/2014	LA14FG20	LANL/54-G	8.250935	30.61736	LW140025	########	WCS	::
69177		68817	S853006	SB50039		69170	797972	Nitrate	No	GovGoal	LA-MIN02-	Remediatic	1/9/2014	133	4/15/1985	1/22/2014	LA14FG12	LANL/54-G	2.915399	9.833202	LW140022	########	WCS	::
69179		68754	S852593	SB50025		69204	797974	Nitrate	No	GovGoal	LA-MIN02-	Remediatic	1/10/2014	132	4/15/1985	2/19/2014	LA14FG20	WCS/OPER	9.898257	79.09342	LW140013	########	WCS	::
69180			S841239	SB50102	69201		797975	Nitrate	No	GovGoal	LA-MIN02-	Remediatic	1/9/2014	133	9/23/1984	1/22/2014	LA14FG12	LANL/54-G	31.81723	137.0118	LW140027	########	WCS	::
69181		68817	S853006	SB50033		69170	797976	Nitrate	No	GovGoal	LA-MIN02-	Remediatic	1/9/2014	133	4/15/1985	1/22/2014	LA14FG12	LANL/54-G	2.179027	13.91163	LW140018	########	WCS	::
69182		68817	S853006	SB50037		69170	797977	Nitrate	No	GovGoal	LA-MIN02-	Remediatic	1/9/2014	133	4/15/1985	1/22/2014	LA14FG12	WCS/OPER	4.708286	52.51462	LW140011	4/9/2014	WCS	::
69185		68761	S855566	SB50043		69205	798012	Nitrate	No	GovGoal	LA-MIN02-	Remediatic	1/10/2014	132	11/19/1985	1/30/2014	LA14FG20	LANL/54-G	1.887566	4.965868	LW140035	########	WCS	::
69187		68826	S901114	SB50020		69220	798014	Nitrate	No	GovGoal	LA-MIN02-	Remediatic	1/11/2014	131	6/12/1990	2/4/2014	LA14FG12	LANL/54-G	6.140974	20.12053	LW140009	4/8/2014	WCS	::

PKG_ID	Related to	Intermedia	ParentID	Overpacke	Empty P	Empty Dau	C_ID	Salt Type	WasteLok	3706	Waste Stre	Type	RemedDate	Days Since	WasteGenDate	FGA_Date	HSG_BDR	Location	PECi	FGE	Shipment	Ship Date	Location C	Specific Lo
69188			S846132	SB50018	69168		798011	Nitrate	No	GovGoal	LA-MIN02-	Remediatic	1/13/2014	129	12/18/1984	2/4/2014	LA14FG12(	LANL/54-G	4.059979	15.89284	LW140009	4/8/2014	WCS	::
69189			S844253	SB50108	69243		798368	Nitrate	No	GovGoal	LA-MIN02-	Remediatic	1/17/2014	125	5/9/1984	2/4/2014	LA14FG12(	LANL/54-G	2.252581	11.03385	LW140029	########	WCS	::
69191		68752	S823276	SB50002		69247	798366	Nitrate	No	GovGoal	LA-MIN02-	Remediatic	1/16/2014	126	6/14/1982	2/4/2014	LA14FG12(	WCS/OPER	0.790684	8.720999	LW140012	4/9/2014	WCS	::
69192			S851436	SB50105	69173		798365	Nitrate	No	GovGoal	LA-MIN02-	Remediatic	1/14/2014	128	2/11/1985	2/4/2014	LA14FG12(	LANL/54-G	3.065492	21.83125	LW140028	########	WCS	::
69193			S846132	SB50041	69168		798373	Nitrate	No	GovGoal	LA-MIN02-	Remediatic	1/13/2014	129	12/18/1984	1/29/2014	LA14FG20	WCS/OPER	8.318033	47.90983	LW140014	########	WCS	::
69194			S851436	SB50088	69173		798372	Nitrate	No	GovGoal	LA-MIN02-	Remediatic	1/14/2014	128	2/11/1985	1/29/2014	LA14FG20	LANL/54-G	0.378238	1.36163	LW140029	########	WCS	::
69195			S846132	SB50032	69168		798420	Nitrate	No	GovGoal	LA-MIN02-	Remediatic	1/13/2014	129	12/18/1984	1/29/2014	LA14FG20	WCS/OPER	11.93905	52.78006	LW140011	4/9/2014	WCS	::
69196		68815	S870338	SB50046		69224	798426	Nitrate	No	GovGoal	LA-MIN02-	Remediatic	1/12/2014	130	7/6/1987	1/31/2014	LA14FG20	WCS/OPER	2.080291	5.849062	LW140014	########	WCS	::
69209		68815	S870338	SB50010		69224	798024	Nitrate	No	GovGoal	LA-MIN02-	Remediatic	1/12/2014	130	7/6/1987	1/29/2014	LA14FG20	WCS/OPER	43.33981	93.05418	LW140007	4/7/2014	WCS	::
69210		68816	S855216	SB50082		69222	798027	Nitrate	No	GovGoal	LA-MIN02-	Remediatic	1/12/2014	130	10/9/1985	1/31/2014	LA14FG20	LANL/54-G	3.20815	6.579807	LW140020	########	WCS	::
69216			S844253	SB50057	69243		798221	Nitrate	No	GovGoal	LA-MIN02-	Remediatic	1/17/2014	125	5/9/1984	2/3/2014	LA14FG20	LANL/54-G	10.85095	84.98426	LW140025	########	WCS	::
69217		68752	S823276	SB50014		69247	798216	Nitrate	No	GovGoal	LA-MIN02-	Remediatic	1/16/2014	126	6/14/1982	1/29/2014	LA14FG20	LANL/54-G	9.995537	17.02301	LW140008	4/8/2014	WCS	::
69226			S844253	SB50104	69243		798220	Nitrate	No	GovGoal	LA-MIN02-	Remediatic	1/17/2014	125	5/9/1984	2/12/2014	LA14FG20	LANL/54-G	20.80126	100.5693	LW140026	########	WCS	::
69234			S861980	SB50034	69240		798285	Nitrate	No	GovGoal	LA-MIN02-	Remediatic	1/18/2014	124	4/7/1986	1/31/2014	LA14FG20	WCS/OPER	2.909695	9.330424	LW140023	########	WCS	::
69237			S861980	SB50066	69240		798282	Nitrate	No	GovGoal	LA-MIN02-	Remediatic	1/18/2014	124	4/7/1986	2/3/2014	LA14FG20	LANL/54-G	12.86815	55.21131	LW140019	########	WCS	::
69279		68743	S852931	SB50421		69007	798789	Nitrate	No	GovGoal	LA-MIN02-	Remediatic	1/28/2014	114	5/13/1985	2/11/2014	LA14FG20	WCS/OPER	28.18808	102.3501	LW140036	########	WCS	::
69282		68753	S852592	SB50064		69318	798792	Nitrate	No	GovGoal	LA-MIN02-	Remediatic	1/28/2014	114	4/15/1985	2/20/2014	LA14FG20	WCS/OPER	12.66181	71.37747	LW140032	########	WCS	::
69285		68753	S852592	SB50416		69318	798681	Nitrate	No	GovGoal	LA-MIN02-	Remediatic	1/28/2014	114	4/15/1985	2/12/2014	LA14FG20	LANL/54-G	13.87334	93.13969	LW140038	########	WCS	::
69295		68743	S852931	SB50040		69007	798597	Nitrate	No	GovGoal	LA-MIN02-	Remediatic	1/28/2014	114	5/13/1985	2/11/2014	LA14FG20	WCS/OPER	2.9746	5.95125	LW140016	########	WCS	::
69402		68962	S823229	SB50057		69528	799419	Nitrate	No	GovGoal	LA-MIN02-	Remediatic	2/28/2014	83	5/16/1982	3/13/2014	LA14FG20	LANL/54-G	5.150886	57.60494	LW140025	########	WCS	::
69413			S870213	SB50100	69530		799580	Nitrate	No	GovGoal	LA-MIN02-	Remediatic	3/1/2014	82	4/13/1987	3/14/2014	LA14FG20	LANL/54-G	4.123352	19.26523	LW140025	########	WCS	::
69422			S822876	SB50045	69527		799602	Nitrate	No	GovGoal	LA-MIN02-	Remediatic	2/27/2014	84	3/9/1982	3/13/2014	LA14FG20	LANL/54-G	10.09187	4.386394	LW140021	########	WCS	::
69428			S822876	SB50421	69527		799565	Nitrate	No	GovGoal	LA-MIN02-	Remediatic	2/27/2014	84	3/9/1982	3/13/2014	LA14FG20	WCS/OPER	11.36768	4.409913	LW140036	########	WCS	::
69430		68966	S892963	SB50034		69529	799578	Nitrate	No	GovGoal	LA-MIN02-	Remediatic	3/1/2014	82	2/27/1989	3/14/2014	LA14FG20	WCS/OPER	3.872161	41.71851	LW140023	########	WCS	::
69492			S870213	SB50043	69530		799974	Nitrate	No	GovGoal	LA-MIN02-	Remediatic	3/1/2014	82	4/13/1987	3/14/2014	LA14FG20	LANL/54-G	1.232993	13.78918	LW140035	########	WCS	::
69493		68973	S891387	SB50081		69504	799973	Nitrate	No	GovGoal	LA-MIN02-	Remediatic	2/28/2014	83	12/5/1989	3/13/2014	LA14FG20	WCS/OPER	18.41377	63.00488	LW140032	########	WCS	::
69555			S832148	SB50424	69590		800383	Nitrate	No	GovGoal	LA-MIN02-	Remediatic	3/17/2014	66	1/25/1983	4/2/2014	LA14FG20	LANL/54-G	27.14911	70.32738	LW140037	########	WCS	::
68610	1		S845072		68673		797095	Nitrate	No	GovGoal	LA-MIN02-	Remediatic	11/15/2013	188	7/24/1984	12/2/2013	LA13FG21	WIPP/OPE	9.184429	52.78767	LA140003	1/7/2014	WIPP	::
68651	1		S832144		68640		797430	Nitrate	No	GovGoal	LA-MIN02-	Remediatic	11/14/2013	189	12/29/1983	11/27/2013	LA13FG21	WIPP/OPE	13.89811	74.78415	LA140004	1/9/2014	WIPP	::
68650	1		S833846		68641		797468	Nitrate	No	GovGoal	LA-MIN02-	Remediatic	11/13/2013	190	9/21/1983	11/27/2013	LA13FG21	WIPP/OPE	10.83317	26.14434	LA140009	########	WIPP	::
68634	1		S833481		68599		797244	Nitrate	No	GovGoal	LA-MIN02-	Remediatic	11/8/2013	195	7/12/1983	11/22/2013	LA13FG21	WIPP/OPE	2.485734	28.85471	LA130186	########	WIPP	::
68549	1		S852895		68598		796971	Nitrate	No	GovGoal	LA-MIN02-	Remediatic	11/7/2013	196	5/13/1985	11/22/2013	LA13FG21	WIPP/OPE	12.29479	65.96506	LA140003	1/7/2014	WIPP	::
68554			S860093		68593		797016	Nitrate	No	GovGoal	LA-MIN02-	Remediatic	11/7/2013	196	2/19/1986	11/22/2013	LA13FG12	WIPP/OPE	4.174079	17.97287	LA140009	########	WIPP	::
68615			S860093		68593		797187	Nitrate	No	GovGoal	LA-MIN02-	Remediatic	11/7/2013	196	2/19/1986	11/22/2013	LA13FG21	WIPP/OPE	2.533096	9.192624	LA140009	########	WIPP	::
68608	1		S864662		68594		797093	Nitrate	No	GovGoal	LA-MIN02-	Remediatic	11/6/2013	197	12/15/1986	11/25/2013	LA13FG21	WIPP/OPE	9.765094	18.48919	LA140004	1/9/2014	WIPP	::
68552	1		S842181		68589		797035	Nitrate	No	GovGoal	LA-MIN02-	Remediatic	11/5/2013	198	9/23/1984	11/21/2013	LA13FG21	WIPP/OPE	3.370417	6.438471	LA140004	1/9/2014	WIPP	::
68612	1		S853771		68591		797183	Nitrate	No	GovGoal	LA-MIN02-	Remediatic	11/5/2013	198	8/20/1985	11/25/2013	LA13FG21	WIPP/OPE	3.693766	19.74839	LA130186	########	WIPP	::
68558	1		S824208		68532		740568	Nitrate	No	GovGoal	LA-MIN02-	Remediatic	10/31/2013	203	9/1/1982	11/15/2013	LA13FG21	WIPP/OPE	8.124831	4.217588	LA130185	########	WIPP	::
68560	1		S824208		68532		740570	Nitrate	No	GovGoal	LA-MIN02-	Remediatic	10/31/2013	203	9/1/1982	11/15/2013	LA13FG21	WIPP/OPE	6.234433	2.250246	LA130186	########	WIPP	::
68562			S832320		68365		740572	Nitrate	No	GovGoal	LA-MIN02-	Remediatic	10/30/2013	204	11/8/1983	11/15/2013	LA13FG21	WIPP/OPE	10.55176	12.99458	LA130185	########	WIPP	::
68563			S832320		68365		796573	Nitrate	No	GovGoal	LA-MIN02-	Remediatic	10/30/2013	204	11/8/1983	11/15/2013	LA13FG21	WIPP/OPE	17.02301	31.78867	LA130184	########	WIPP	::
68564	1		S825730		68517		796574	Nitrate	No	GovGoal	LA-MIN02-	Remediatic	10/30/2013	204	12/27/1982	11/15/2013	LA13FG21	WIPP/OPE	5.717042	11.17315	LA130185	########	WIPP	::
68575	1		S825902		68518		796592	Nitrate	No	GovGoal	LA-MIN02-	Remediatic	10/29/2013	205	12/28/1982	11/15/2013	LA13FG21	WIPP/OPE	8.70326	33.52131	LA130184	########	WIPP	::
68572			S862255		68530		796590	Nitrate	No	GovGoal	LA-MIN02-	Remediatic	10/28/2013	206	4/7/1986	11/15/2013	LA13FG21	WIPP/OPE	2.149186	24.03542	LA130185	########	WIPP	::
68574			S862255		68530		796591	Nitrate	No	GovGoal	LA-MIN02-	Remediatic	10/28/2013	206	4/7/1986	11/15/2013	LA13FG21	WIPP/OPE	3.121869	15.15282	LA140003	1/7/2014	WIPP	::
68542	1		S852883		68525		797003	Nitrate	No	GovGoal	LA-MIN02-	Remediatic	10/25/2013	209	5/13/1985	11/8/2013	LA13FG21	WIPP/OPE	16.64584	51.19117	LA130180	########	WIPP	::
68482			S851426		68529		738669	Nitrate	No	GovGoal	LA-MIN02-	Remediatic	10/24/2013	210	2/11/1985	11/8/2013	LA13FG21	WIPP/OPE	5.810475	64.06883	LA130185	########	WIPP	::
68456			S854616		68538		796631	Nitrate	No	GovGoal	LA-MIN02-	Remediatic	10/23/2013	211	12/16/1985	11/8/2013	LA13FG21	WIPP/OPE	12.06378	62.324	LA130184	########	WIPP	::
68536			S854616		68538		796969	Nitrate	No	GovGoal	LA-MIN02-	Remediatic	10/23/2013	211	12/16/1985	11/8/2013	LA13FG21	WIPP/OPE	11.63842	23.99736	LA130179	########	WIPP	::
68537			S855290		68526		796970	Nitrate	No	GovGoal	LA-MIN02-	Remediatic	10/23/2013	211	12/16/1985	11/8/2013	LA13FG21	WIPP/OPE	15.78953	55.38417	LA130185	########	WIPP	::
68539			S855290		68526		796973	Nitrate	No	GovGoal	LA-MIN02-	Remediatic	10/23/2013	211	12/16/1985	11/8/2013	LA13FG21	WIPP/OPE	7.026076	10.67696	LA130180	########	WIPP	::
68452			S860095		68524		796575	Nitrate	No	GovGoal	LA-MIN02-	Remediatic	10/22/2013	212	2/19/1986	11/4/2013	LA13FG21	WIPP/OPE	1.663845	9.808669	LA130179	########	WIPP	::
68480	1		S861975		68485		738685	Nitrate	No	GovGoal	LA-MIN02-	Remediatic	10/22/2013	212	4/8/1986	11/4/2013	LA13FG21	WIPP/OPE	7.474144	53.56061	LA130184	########	WIPP	::
68550			S860095		68524		797036	Nitrate	No	GovGoal	LA-MIN02-	Remediatic	10/22/2013	212	2/19/1986	11/4/2013	LA13FG21	WIPP/OPE	8.437207	54.70424	LA130180	########	WIPP	::
68427			S846096		68443		738225	Nitrate	No	GovGoal	LA-MIN02-	Remediatic	10/3/2013	231	12/18/1984	11/13/2013	LA13FG21	WIPP/OPE	1.474375	6.751298	LA140004	1/9/2014	WIPP	::
68454			S846037	SB02096	68521		796584	Nitrate	No	GovGoal	LA-MIN02-	Remediatic	10/3/2013	231	12/18/1984	10/31/2013	LA13FG21	WIPP/OPE	28.97393	195.8245	LA130176	########	WIPP	::
68479			S846037		68521		738706	Nitrate	No	GovGoal	LA-MIN02-	Remediatic	10/3/2013	231	12/18/1984	10/31/2013	LA13FG21	WIPP/OPE	8.354323	47.6003	LA130174	########	WIPP	::
68483			S846037		68521		738668	Nitrate	No	GovGoal	LA-MIN02-	Remediatic	10/3/2013	231	12/18/1984	10/28/2013	LA13FG21	WIPP/OPE	7.345063	27.32207	LA130175	########	WIPP	::
68498			S824967		68487		796911	Nitrate	No	GovGoal	LA-MIN02-	Remediatic	10/3/2013	231	12/28/1982	10/28/2013	LA13FG21	WIPP/OPE	7.965643	17.18827	LA130174	########	WIPP	::
68499			S846096		68443		796912	Nitrate	No	GovGoal	LA-MIN02-	Remediatic	10/3/2013	231	12/18/1984	10/25/2013	LA13FG12	WIPP/OPE	4.37131	24.43519	LA130175	########	WIPP	::
68502			S846096		68443		796915	Nitrate	No	GovGoal	LA-MIN02-	Remediatic	10/3/2013	231	12/18/1984	10/29/2013	LA13FG21	WIPP/OPE	16.1232	83.37048	LA130174	########	WIPP	::
68503			S824967		68487		796967	Nitrate	No	GovGoal	LA-MIN02-	Remediatic	10/3/2013	231	12/28/1982	10/25/2013	LA13FG12	WIPP/OPE	11.98319	29.39857	LA130175	########	WIPP	::
68495			S845338		68440		796679	Nitrate	No	GovGoal	LA-MIN02-	Remediatic	10/2/2013	232	10/31/1984	10/28/2013	LA13FG21	WIPP/OPE	19.83458	54.65111	LA130185	########	WIPP	::

PKG_ID	Related to	Intermedia	ParentID	Overpacke	Empty P	Empty Dau	C_ID	Salt Type	WasteLok	3706	Waste Stre	Type	RemedDate	Days Since	WasteGenDate	FGA_Date	HSG_BDR	Location	PECi	FGE	Shipment	Ship Date	Location C	Specific Lo
68496			S845338		68440		796678	Nitrate	No	GovGoal	LA-MIN02-	Remediatic	10/2/2013	232	10/31/1984	10/25/2013	LA13FG12	WIPP/OPE	15.87528	56.07362	LA130174	########	WIPP	::
68500			S843528		68486		796685	Nitrate	No	GovGoal	LA-MIN02-	Remediatic	10/2/2013	232	9/23/1984	11/1/2013	LA13FG21	WIPP/OPE	22.72619	94.95419	LA130184	########	WIPP	::
68504			S843528		68486		796683	Nitrate	No	GovGoal	LA-MIN02-	Remediatic	10/2/2013	232	9/23/1984	10/25/2013	LA13FG12	WIPP/OPE	4.301395	20.07507	LA130174	########	WIPP	::
68474			S853898		68441		738667	Nitrate	No	GovGoal	LA-MIN02-	Remediatic	10/1/2013	233	8/20/1985	10/29/2013	LA13FG21	WIPP/OPE	8.931452	62.79239	LA130185	########	WIPP	::
68475			S853898		68441		738703	Nitrate	No	GovGoal	LA-MIN02-	Remediatic	10/1/2013	233	8/20/1985	10/25/2013	LA13FG12	WIPP/OPE	12.45963	90.85673	LA130180	########	WIPP	::
68473			S841292		68439		738666	Nitrate	No	GovGoal	LA-MIN02-	Remediatic	9/30/2013	234	9/23/1984	10/30/2013	LA13FG21	WIPP/OPE	4.081344	19.43046	LA130179	########	WIPP	::
68484			S841292		68439		738588	Nitrate	No	GovGoal	LA-MIN02-	Remediatic	9/30/2013	234	9/23/1984	10/29/2013	LA13FG21	WIPP/OPE	4.918674	55.00799	LA130174	########	WIPP	::
68398			S825021		68445		733257	Nitrate	No	GovGoal	LA-MIN02-	Remediatic	9/27/2013	237	11/9/1982	11/13/2013	LA13FG21	WIPP/OPE	1.970425	22.03625	LA140004	1/9/2014	WIPP	::
68436			S825021		68445		733283	Nitrate	No	GovGoal	LA-MIN02-	Remediatic	9/27/2013	237	11/9/1982	11/13/2013	LA13FG21	WIPP/OPE	3.109119	10.04297	LA140004	1/9/2014	WIPP	::
68462			S825021		68445		796583	Nitrate	No	GovGoal	LA-MIN02-	Remediatic	9/27/2013	237	11/9/1982	10/30/2013	LA13FG21	WIPP/OPE	1.196044	13.18717	LA130174	########	WIPP	::
68463			S825021		68445		738577	Nitrate	No	GovGoal	LA-MIN02-	Remediatic	9/27/2013	237	11/9/1982	10/29/2013	LA13FG21	WIPP/OPE	22.54121	40.87516	LA130179	########	WIPP	::
68412	1		S823004		68438		733266	Nitrate	No	GovGoal	LA-MIN02-	Remediatic	9/26/2013	238	4/4/1982	10/25/2013	LA13FG12	WIPP/OPE	1.165933	2.399733	LA130185	########	WIPP	::
68435			S842234		68444		733281	Nitrate	No	GovGoal	LA-MIN02-	Remediatic	9/26/2013	238	3/13/1984	11/13/2013	LA13FG21	WIPP/OPE	3.4911	23.95161	LA140004	1/9/2014	WIPP	::
68455	1		S823004		68438		796630	Nitrate	No	GovGoal	LA-MIN02-	Remediatic	9/26/2013	238	4/4/1982	10/28/2013	LA13FG21	WIPP/OPE	1.435014	15.8244	LA130174	########	WIPP	::
68465			S842234		68444		738562	Nitrate	No	GovGoal	LA-MIN02-	Remediatic	9/26/2013	238	3/13/1984	10/25/2013	LA13FG12	WIPP/OPE	11.52847	30.14062	LA130175	########	WIPP	::
68466			S842234		68444		738526	Nitrate	No	GovGoal	LA-MIN02-	Remediatic	9/26/2013	238	3/13/1984	10/28/2013	LA13FG21	WIPP/OPE	3.470398	9.333619	LA130174	########	WIPP	::
68467	1		S841320		68367		738445	Nitrate	No	GovGoal	LA-MIN02-	Remediatic	9/26/2013	238	9/23/1984	10/29/2013	LA13FG21	WIPP/OPE	1.873835	20.95603	LA130175	########	WIPP	::
68468	1		S841320		68367		738294	Nitrate	No	GovGoal	LA-MIN02-	Remediatic	9/26/2013	238	9/23/1984	10/29/2013	LA13FG21	WIPP/OPE	2.624419	29.35019	LA130175	########	WIPP	::
68397			S881570		68472		733254	Nitrate	No	GovGoal	LA-MIN02-	Remediatic	9/25/2013	239	11/7/1988	11/13/2013	LA13FG21	WIPP/OPE	6.362245	18.73519	LA140004	1/9/2014	WIPP	::
68400			S833037		68421		733255	Nitrate	No	GovGoal	LA-MIN02-	Remediatic	9/25/2013	239	5/16/1983	11/13/2013	LA13FG21	WIPP/OPE	3.333349	5.330691	LA140004	1/9/2014	WIPP	::
68411			S841314		68364		733267	Nitrate	No	GovGoal	LA-MIN02-	Remediatic	9/25/2013	239	9/23/1984	10/24/2013	LA13FG21	WIPP/OPE	5.217134	58.34582	LA130172	########	WIPP	::
68414			S841314		68364		733261	Nitrate	No	GovGoal	LA-MIN02-	Remediatic	9/25/2013	239	9/23/1984	11/22/2013	LA13FG21	WIPP/OPE	30.88732	103.5799	LA140003	1/7/2014	WIPP	::
68451			S881570		68472		796572	Nitrate	No	GovGoal	LA-MIN02-	Remediatic	9/25/2013	239	11/7/1988	10/28/2013	LA13FG21	WIPP/OPE	5.513732	7.345344	LA130173	########	WIPP	::
68458			S833037		68421		796633	Nitrate	No	GovGoal	LA-MIN02-	Remediatic	9/25/2013	239	5/16/1983	10/25/2013	LA13FG12	WIPP/OPE	3.085096	1.901117	LA130175	########	WIPP	::
68461			S881570	SB02097	68472		796582	Nitrate	No	GovGoal	LA-MIN02-	Remediatic	9/25/2013	239	11/7/1988	10/24/2013	LA13FG21	WIPP/OPE	36.2161	180.4242	LA130177	########	WIPP	::
68469			S833037		68421		738245	Nitrate	No	GovGoal	LA-MIN02-	Remediatic	9/25/2013	239	5/16/1983	10/29/2013	LA13FG21	WIPP/OPE	19.64557	68.25745	LA130180	########	WIPP	::
68416			S821203		68460		733263	Nitrate	No	GovGoal	LA-MIN02-	Remediatic	9/24/2013	240	6/14/1982	10/23/2013	LA13FG12	WIPP/OPE	8.630048	95.13246	LA130169	########	WIPP	::
68450			S851739		68471		796571	Nitrate	No	GovGoal	LA-MIN02-	Remediatic	9/24/2013	240	2/11/1985	10/24/2013	LA13FG21	WIPP/OPE	5.655549	61.4732	LA130180	########	WIPP	::
68453			S851739		68471		734690	Nitrate	No	GovGoal	LA-MIN02-	Remediatic	9/24/2013	240	2/11/1985	10/22/2013	LA13FG12	WIPP/OPE	16.66869	91.15306	LA130174	########	WIPP	::
68338			S846195		68368		733211	Nitrate	No	GovGoal	LA-MIN02-	Remediatic	9/23/2013	241	12/18/1984	10/24/2013	LA13FG21	WIPP/OPE	5.564645	62.23222	LA130179	########	WIPP	::
68376			S846172		68418		737767	Nitrate	No	GovGoal	LA-MIN02-	Remediatic	9/23/2013	241	12/30/1984	10/24/2013	LA13FG21	WIPP/OPE	5.239549	58.5965	LA130172	########	WIPP	::
68413			S846172		68418		733265	Nitrate	No	GovGoal	LA-MIN02-	Remediatic	9/23/2013	241	12/30/1984	10/22/2013	LA13FG12	WIPP/OPE	8.668596	95.61875	LA130173	########	WIPP	::
68448			S846195		68368		734689	Nitrate	No	GovGoal	LA-MIN02-	Remediatic	9/23/2013	241	12/18/1984	10/23/2013	LA13FG12	WIPP/OPE	5.563532	62.21977	LA130171	########	WIPP	::
68374			S845104		68442		737543	Nitrate	No	GovGoal	LA-MIN02-	Remediatic	9/20/2013	244	7/24/1984	10/24/2013	LA13FG21	WIPP/OPE	9.998564	101.7039	LA130173	########	WIPP	::
68380			S842463		68420		733236	Nitrate	No	GovGoal	LA-MIN02-	Remediatic	9/19/2013	245	2/13/1984	11/1/2013	LA13FG21	WIPP/OPE	8.78456	92.59471	LA130184	########	WIPP	::
68393			S852923		68405		733251	Nitrate	No	GovGoal	LA-MIN02-	Remediatic	9/19/2013	245	5/13/1985	11/5/2013	LA13FG21	WIPP/OPE	3.206537	19.26067	LA130180	########	WIPP	::
68399			S846660		68369		733256	Nitrate	No	GovGoal	LA-MIN02-	Remediatic	9/19/2013	245	12/18/1984	11/5/2013	LA13FG21	WIPP/OPE	3.272091	16.51206	LA130180	########	WIPP	::
68407			S851752		68406		733270	Nitrate	No	GovGoal	LA-MIN02-	Remediatic	9/19/2013	245	3/20/1985	10/24/2013	LA13FG21	WIPP/OPE	12.01468	131.3455	LA130173	########	WIPP	::
68410			S852923		68405		733268	Nitrate	No	GovGoal	LA-MIN02-	Remediatic	9/19/2013	245	5/13/1985	10/4/2013	LA13FG21	WIPP/OPE	5.088114	18.30153	LA130171	########	WIPP	::
68415			S846660		68369		733262	Nitrate	No	GovGoal	LA-MIN02-	Remediatic	9/19/2013	245	12/18/1984	10/24/2013	LA13FG21	WIPP/OPE	13.62043	58.32779	LA130185	########	WIPP	::
68446			S852923		68405		734688	Nitrate	No	GovGoal	LA-MIN02-	Remediatic	9/19/2013	245	5/13/1985	10/4/2013	LA13FG21	WIPP/OPE	13.79964	64.21267	LA130169	########	WIPP	::
68447			S846660		68369		796576	Nitrate	No	GovGoal	LA-MIN02-	Remediatic	9/19/2013	245	12/18/1984	10/4/2013	LA13FG21	WIPP/OPE	13.68952	93.05606	LA130169	########	WIPP	::
68337			S841240		68419		733210	Nitrate	No	GovGoal	LA-MIN02-	Remediatic	9/18/2013	246	9/23/1984	10/24/2013	LA13FG21	WIPP/OPE	5.434191	18.4398	LA130174	########	WIPP	::
68375			S853899		68356		737544	Nitrate	No	GovGoal	LA-MIN02-	Remediatic	9/18/2013	246	8/19/1985	10/22/2013	LA13FG12	WIPP/OPE	10.28853	29.88093	LA130172	########	WIPP	::
68378			S862241		68366		733234	Nitrate	No	GovGoal	LA-MIN02-	Remediatic	9/18/2013	246	4/7/1986	10/23/2013	LA13FG12	WIPP/OPE	15.68712	125.7343	LA130175	########	WIPP	::
68383			S855943		68363		733242	Nitrate	No	GovGoal	LA-MIN02-	Remediatic	9/18/2013	246	12/17/1985	10/22/2013	LA13FG12	WIPP/OPE	11.1091	58.27621	LA130171	########	WIPP	
68384			S855943		68363		733241	Nitrate	No	GovGoal	LA-MIN02-	Remediatic	9/18/2013	246	12/17/1985	10/22/2013	LA13FG12	WIPP/OPE	1.564519	3.742572	LA130184	########	WIPP	
68386			S844573		68361		733239	Nitrate	No	GovGoal	LA-MIN02-	Remediatic	9/18/2013	246	7/25/1984	10/23/2013	LA13FG12	WIPP/OPE	14.16685	133.2318	LA130179	########	WIPP	::
68387			S841240		68419		733238	Nitrate	No	GovGoal	LA-MIN02-	Remediatic	9/18/2013	246	9/23/1984	10/22/2013	LA13FG12	WIPP/OPE	14.64553	81.67122	LA130175	########	WIPP	::
68409			S853899		68356		733269	Nitrate	No	GovGoal	LA-MIN02-	Remediatic	9/18/2013	246	8/19/1985	10/23/2013	LA13FG12	WIPP/OPE	11.15193	89.1668	LA130175	########	WIPP	::
68417			S862241	SB02094	68366		733264	Nitrate	No	GovGoal	LA-MIN02-	Remediatic	9/18/2013	246	4/7/1986	10/23/2013	LA13FG12	WIPP/OPE	19.33008	165.0502	LA130172	########	WIPP	::
68317			S835283		68403		733205	Nitrate	No	GovGoal	LA-MIN02-	Remediatic	9/17/2013	247	12/29/1983	10/23/2013	LA13FG12	WIPP/OPE	0.278839	3.010602	LA130173	########	WIPP	::
68348			S835283		68403		738029	Nitrate	No	GovGoal	LA-MIN02-	Remediatic	9/17/2013	247	12/29/1983	11/5/2013	LA13FG21	WIPP/OPE	7.436234	21.55576	LA130180	########	WIPP	::
68377			S835283		68403		733233	Nitrate	No	GovGoal	LA-MIN02-	Remediatic	9/17/2013	247	12/29/1983	10/22/2013	LA13FG12	WIPP/OPE	2.788439	4.59371	LA130180	########	WIPP	::
68381			S855240		68402		733237	Nitrate	No	GovGoal	LA-MIN02-	Remediatic	9/17/2013	247	10/9/1985	10/23/2013	LA13FG12	WIPP/OPE	5.08172	8.892873	LA130171	########	WIPP	::
68385			S855240		68402		733240	Nitrate	No	GovGoal	LA-MIN02-	Remediatic	9/17/2013	247	10/9/1985	10/24/2013	LA13FG21	WIPP/OPE	10.14848	57.48086	LA130172	########	WIPP	::
68389			S835283		68403		733244	Nitrate	No	GovGoal	LA-MIN02-	Remediatic	9/17/2013	247	12/29/1983	11/5/2013	LA13FG21	WIPP/OPE	7.171326	20.90009	LA140004	1/9/2014	WIPP	::
68390			S835283		68403		733245	Nitrate	No	GovGoal	LA-MIN02-	Remediatic	9/17/2013	247	12/29/1983	11/5/2013	LA13FG21	WIPP/OPE	7.591402	35.30582	LA140004	1/9/2014	WIPP	::
68391			S855240		68402		733246	Nitrate	No	GovGoal	LA-MIN02-	Remediatic	9/17/2013	247	10/9/1985	11/5/2013	LA13FG21	WIPP/OPE	0.163929	0.53959	LA130180	########	WIPP	::
68392			S835283		68403		733247	Nitrate	No	GovGoal	LA-MIN02-	Remediatic	9/17/2013	247	12/29/1983	11/5/2013	LA13FG21	WIPP/OPE	2.304293	8.553877	LA140004	1/9/2014	WIPP	::
68404			S835283		68403		733258	Nitrate	No	GovGoal	LA-MIN02-	Remediatic	9/17/2013	247	12/29/1983	10/22/2013	LA13FG12	WIPP/OPE	3.466934	37.38837	LA130175	########	WIPP	::
68379			S823221		68401		733235	Nitrate	No	GovGoal	LA-MIN02-	Remediatic	9/16/2013	248	5/16/1982	10/22/2013	LA13FG12	WIPP/OPE	11.48999	126.6856	LA130171	########	WIPP	::
68382			S823221		68401		733243	Nitrate	No	GovGoal	LA-MIN02-	Remediatic	9/16/2013	248	5/16/1982	10/22/2013	LA13FG12	WIPP/OPE	1.027354	11.3267	LA130175	########	WIPP	::

PKG_ID	Related to	Intermedia	ParentID	Overpacke	Empty P	Empty Dau	C_ID	Salt Type	WasteLok	3706	Waste Stre	Type	RemedDate	Days Since	WasteGenDate	FGA_Date	HSG_BDR	Location	PECi	FGE	Shipment	Ship Date	Location C	Specific Lo
68323			S825020		68360		729239	Nitrate	No	GovGoal	LA-MIN02-	Remediatic	9/13/2013	251	11/9/1982	11/5/2013	LA13FG21	WIPP/OPE	4.884006	10.31174	LA130180	########	WIPP	::
68332			S825020		68360		733208	Nitrate	No	GovGoal	LA-MIN02-	Remediatic	9/13/2013	251	11/9/1982	10/22/2013	LA13FG12	WIPP/OPE	3.038142	33.4932	LA130171	########	WIPP	::
68349			S825020		68360		733249	Nitrate	No	GovGoal	LA-MIN02-	Remediatic	9/13/2013	251	11/9/1982	11/5/2013	LA13FG21	WIPP/OPE	1.933639	3.649163	LA130180	########	WIPP	::
68335			S852513	SB02094	68388		733209	Nitrate	No	GovGoal	LA-MIN02-	Remediatic	9/12/2013	252	3/17/1985	9/25/2013	LA13FG21	WIPP/OPE	0.825029	2.834821	LA130172	########	WIPP	::
68336			S852513		68388		735128	Nitrate	No	GovGoal	LA-MIN02-	Remediatic	9/12/2013	252	3/17/1985	9/25/2013	LA13FG21	WIPP/OPE	12.66249	93.37588	LA130175	########	WIPP	::
68344			S852513		68388		733231	Nitrate	No	GovGoal	LA-MIN02-	Remediatic	9/12/2013	252	3/17/1985	11/5/2013	LA13FG21	WIPP/OPE	11.68536	89.81279	LA140004	1/9/2014	WIPP	::
68318	1		S846107		68359		729233	Nitrate	No	GovGoal	LA-MIN02-	Remediatic	9/11/2013	253	12/18/1984	9/25/2013	LA13FG21	WIPP/OPE	4.569366	31.06081	LA130175	########	WIPP	::
68334	1		S846107		68359		735127	Nitrate	No	GovGoal	LA-MIN02-	Remediatic	9/11/2013	253	12/18/1984	9/25/2013	LA13FG21	WIPP/OPE	11.99982	75.24508	LA130180	########	WIPP	::
68343			S851682		68357		735151	Nitrate	No	GovGoal	LA-MIN02-	Remediatic	9/11/2013	253	2/11/1985	11/13/2013	LA13FG21	WIPP/OPE	4.272151	30.06591	LA140004	1/9/2014	WIPP	::
68372			S851682		68357		736889	Nitrate	No	GovGoal	LA-MIN02-	Remediatic	9/11/2013	253	2/11/1985	9/25/2013	LA13FG21	WIPP/OPE	9.130764	98.87788	LA130161	########	WIPP	::
68373			S851682		68357		737542	Nitrate	No	GovGoal	LA-MIN02-	Remediatic	9/11/2013	253	2/11/1985	9/25/2013	LA13FG21	WIPP/OPE	16.07257	145.8176	LA130174	########	WIPP	::
68316			S846168		68326		729232	Nitrate	No	GovGoal	LA-MIN02-	Remediatic	9/10/2013	254	12/30/1984	9/26/2013	LA13FG21	WIPP/OPE	9.220453	66.99794	LA130161	########	WIPP	::
68330			S846168		68326		733207	Nitrate	No	GovGoal	LA-MIN02-	Remediatic	9/10/2013	254	12/30/1984	9/25/2013	LA13FG21	WIPP/OPE	6.910825	52.13826	LA130179	########	WIPP	::
68345			S846168		68326		733230	Nitrate	No	GovGoal	LA-MIN02-	Remediatic	9/10/2013	254	12/30/1984	11/5/2013	LA13FG21	WIPP/OPE	2.596678	18.77224	LA140004	1/9/2014	WIPP	::
68346			S846168		68326		733212	Nitrate	No	GovGoal	LA-MIN02-	Remediatic	9/10/2013	254	12/30/1984	11/5/2013	LA13FG21	WIPP/OPE	14.74545	112.6146	LA130179	########	WIPP	::
68312			S832145	SB02092	68362		729230	Nitrate	No	GovGoal	LA-MIN02-	Remediatic	9/9/2013	255	4/13/1983	9/25/2013	LA13FG21	WIPP/OPE	3.558688	20.41117	LA130167	########	WIPP	::
68329			S832145	SB02098	68362		729244	Nitrate	No	GovGoal	LA-MIN02-	Remediatic	9/9/2013	255	4/13/1983	9/25/2013	LA13FG21	WIPP/OPE	17.86526	152.2695	LA130176	########	WIPP	::
68339			S842213		68370		735149	Nitrate	No	GovGoal	LA-MIN02-	Remediatic	9/9/2013	255	5/9/1984	11/5/2013	LA13FG21	WIPP/OPE	8.310996	89.75876	LA130180	########	WIPP	::
68327	1		S891513		68358		729243	Nitrate	No	GovGoal	LA-MIN02-	Remediatic	9/7/2013	257	12/5/1989	10/24/2013	LA13FG21	WIPP/OPE	4.846414	54.19988	LA130173	########	WIPP	::
68340	1		S891513		68358		733215	Nitrate	No	GovGoal	LA-MIN02-	Remediatic	9/7/2013	257	12/5/1989	11/5/2013	LA13FG21	WIPP/OPE	7.098306	44.99454	LA130180	########	WIPP	::
68300			S853641		68353		729225	Nitrate	No	GovGoal	LA-MIN02-	Remediatic	9/5/2013	259	7/9/1985	9/25/2013	LA13FG21	WIPP/OPE	8.922912	33.40356	LA130169	########	WIPP	::
68304			S832140	SB02107	68354		733199	Nitrate	No	GovGoal	LA-MIN02-	Remediatic	9/5/2013	259	11/8/1983	11/5/2013	LA13FG21	WIPP/OPE	5.541574	61.97419	LA130181	########	WIPP	::
68309			S832140		68354		729229	Nitrate	No	GovGoal	LA-MIN02-	Remediatic	9/5/2013	259	11/8/1983	9/25/2013	LA13FG21	WIPP/OPE	4.570648	28.486	LA130161	########	WIPP	::
68310			S853641		68353		733201	Nitrate	No	GovGoal	LA-MIN02-	Remediatic	9/5/2013	259	7/9/1985	9/25/2013	LA13FG21	WIPP/OPE	11.72841	61.9348	LA130161	########	WIPP	::
68321			S853641		68353		729237	Nitrate	No	GovGoal	LA-MIN02-	Remediatic	9/5/2013	259	7/9/1985	11/5/2013	LA13FG21	WIPP/OPE	9.678332	88.61904	LA130180	########	WIPP	::
68322			S832143		68355		729238	Nitrate	No	GovGoal	LA-MIN02-	Remediatic	9/5/2013	259	1/25/1983	9/25/2013	LA13FG21	WIPP/OPE	10.48995	85.76183	LA130185	########	WIPP	::
68324			S832140		68354		729240	Nitrate	No	GovGoal	LA-MIN02-	Remediatic	9/5/2013	259	11/8/1983	11/13/2013	LA13FG21	WIPP/OPE	10.66293	93.68557	LA130179	########	WIPP	::
94148			S881607		94150		791047	Nitrate	No	GovGoal	LA-MIN02-	Remediatic	8/8/2013	287	11/7/1988	8/22/2013	LA13FG12	WIPP/OPE	15.9999	55.06461	LA130169	########	WIPP	::
94149			S881607		94150		791048	Nitrate	No	GovGoal	LA-MIN02-	Remediatic	8/8/2013	287	11/7/1988	9/9/2013	LA13FG20	WIPP/OPE	22.14843	105.6096	LA130173	########	WIPP	::
94151	1		S842528		94153		791050	Nitrate	No	GovGoal	LA-MIN02-	Remediatic	8/8/2013	287	3/12/1984	8/26/2013	LA13FG12	WIPP/OPE	14.45908	139.7959	LA130173	########	WIPP	::
93609			S824508		93612		791257	Nitrate	No	GovGoal	LA-MIN02-	Remediatic	5/3/2013	384	12/28/1982	5/17/2013	LA13FG20	WIPP/OPE	2.657211	9.361902	LA130151	########	WIPP	::
93610			S824508		93612		791258	Nitrate	No	GovGoal	LA-MIN02-	Remediatic	5/3/2013	384	12/28/1982	5/17/2013	LA13FG20	WIPP/OPE	6.275167	14.94211	LA130151	########	WIPP	::
93611			S824508		93612		791259	Nitrate	No	GovGoal	LA-MIN02-	Remediatic	5/3/2013	384	12/28/1982	7/29/2013	LA13FG20	WIPP/OPE	25.70857	86.65845	LA130175	########	WIPP	::
93606			S824541		93608		790819	Nitrate	No	GovGoal	LA-MIN02-	Remediatic	5/2/2013	385	10/4/1982	5/22/2013	LA13FG80	WIPP/OPE	7.382249	59.71247	LA130155	########	WIPP	::
93607			S824541		93608		790820	Nitrate	No	GovGoal	LA-MIN02-	Remediatic	5/2/2013	385	10/4/1982	5/22/2013	LA13FG80	WIPP/OPE	24.24628	99.55372	LA130179	########	WIPP	::
93597			S855126		93600		791256	Nitrate	No	GovGoal	LA-MIN02-	Remediatic	5/1/2013	386	10/9/1985	5/15/2013	LA13FG20	WIPP/OPE	3.458527	35.3186	LA130129	9/4/2013	WIPP	::
93598			S855126		93600		791162	Nitrate	No	GovGoal	LA-MIN02-	Remediatic	5/1/2013	386	10/9/1985	5/14/2013	LA13FG20	WIPP/OPE	11.4056	116.4823	LA130130	9/5/2013	WIPP	::
93599			S855126		93600		791163	Nitrate	No	GovGoal	LA-MIN02-	Remediatic	5/1/2013	386	10/9/1985	5/22/2013	LA13FG80	WIPP/OPE	1.934638	4.657598	LA130155	########	WIPP	::
93601			S832241		93604		791165	Nitrate	No	GovGoal	LA-MIN02-	Remediatic	5/1/2013	386	11/8/1983	5/14/2013	LA13FG20	WIPP/OPE	1.118546	11.5889	LA130150	########	WIPP	::
93602			S832241		93604		789460	Nitrate	No	GovGoal	LA-MIN02-	Remediatic	5/1/2013	386	11/8/1983	5/22/2013	LA13FG80	WIPP/OPE	8.849646	25.89873	LA130155	########	WIPP	::
93603			S832241		93604		789461	Nitrate	No	GovGoal	LA-MIN02-	Remediatic	5/1/2013	386	11/8/1983	5/14/2013	LA13FG20	WIPP/OPE	12.13272	54.04337	LA130150	########	WIPP	::
93593			S824660		93596		790754	Nitrate	No	GovGoal	LA-MIN02-	Remediatic	4/30/2013	387	12/28/1982	5/13/2013	LA13FG20	WIPP/OPE	4.574013	18.55821	LA130130	9/5/2013	WIPP	::
93594			S824660		93596		790755	Nitrate	No	GovGoal	LA-MIN02-	Remediatic	4/30/2013	387	12/28/1982	5/13/2013	LA13FG20	WIPP/OPE	11.92607	131.3477	LA130171	########	WIPP	::
93595			S824660		93596		790756	Nitrate	No	GovGoal	LA-MIN02-	Remediatic	4/30/2013	387	12/28/1982	5/22/2013	LA13FG80	WIPP/OPE	4.828956	25.09668	LA130155	########	WIPP	::
93588			S832141		93591		790702	Nitrate	No	GovGoal	LA-MIN02-	Remediatic	4/29/2013	388	12/29/1983	5/13/2013	LA13FG20	WIPP/OPE	1.429712	0.528955	LA130125	########	WIPP	::
93589			S832141		93591		790703	Nitrate	No	GovGoal	LA-MIN02-	Remediatic	4/29/2013	388	12/29/1983	5/13/2013	LA13FG20	WIPP/OPE	13.48351	39.88149	LA130125	########	WIPP	::
93590			S832141		93591		790704	Nitrate	No	GovGoal	LA-MIN02-	Remediatic	4/29/2013	388	12/29/1983	5/22/2013	LA13FG80	WIPP/OPE	3.787042	4.001688	LA130155	########	WIPP	::
93576			S870475		93580		791567	Nitrate	No	GovGoal	LA-MIN02-	Remediatic	4/28/2013	389	10/13/1987	5/13/2013	LA13FG20	WIPP/OPE	9.024942	31.42248	LA130151	########	WIPP	::
93577			S870475		93580		790793	Nitrate	No	GovGoal	LA-MIN02-	Remediatic	4/28/2013	389	10/13/1987	5/13/2013	LA13FG20	WIPP/OPE	13.37203	74.62352	LA130149	########	WIPP	::
93581			S824187		93583		790795	Nitrate	No	GovGoal	LA-MIN02-	Remediatic	4/28/2013	389	12/28/1982	5/15/2013	LA13FG20	WIPP/OPE	10.31529	3.825529	LA130150	########	WIPP	::
93582			S824187		93583		790839	Nitrate	No	GovGoal	LA-MIN02-	Remediatic	4/28/2013	389	12/28/1982	5/13/2013	LA13FG20	WIPP/OPE	16.68199	59.27961	LA130184	########	WIPP	::
93568			S824188	SB02080	93575		790696	Nitrate	No	GovGoal	LA-MIN02-	Remediatic	4/26/2013	391	12/28/1982	5/10/2013	LA13FG20	WIPP/OPE	3.611293	8.041142	LA130153	########	WIPP	::
93571			S824188		93575		790697	Nitrate	No	GovGoal	LA-MIN02-	Remediatic	4/26/2013	391	12/28/1982	5/15/2013	LA13FG20	WIPP/OPE	3.356654	4.870124	LA130151	########	WIPP	::
93572			S824188		93575		790698	Nitrate	No	GovGoal	LA-MIN02-	Remediatic	4/26/2013	391	12/28/1982	5/14/2013	LA13FG20	WIPP/OPE	0.791845	8.738871	LA130150	########	WIPP	::
93573			S824188		93575		790699	Nitrate	No	GovGoal	LA-MIN02-	Remediatic	4/26/2013	391	12/28/1982	5/14/2013	LA13FG20	WIPP/OPE	19.28404	68.83404	LA130150	########	WIPP	::
93574			S824188		93575		790700	Nitrate	No	GovGoal	LA-MIN02-	Remediatic	4/26/2013	391	12/28/1982	5/22/2013	LA13FG80	WIPP/OPE	7.985547	54.40264	LA130155	########	WIPP	::
93515		88957	S824181		88965	93517	790666	Nitrate	No	GovGoal	LA-MIN02-	Remediatic	4/19/2013	398	5/5/2011	5/9/2013	LA13FG20	WIPP/OPE	20.30639	79.02777	LA130151	########	WIPP	
93516		88957	S824181		88965	93517	790667	Nitrate	No	GovGoal	LA-MIN02-	Remediatic	4/19/2013	398	5/5/2011	5/3/2013	LA13FG20	WIPP/OPE	3.301508	11.28996	LA130149	########	WIPP	
93150			S833937	SB02093	93157		791466	Nitrate	No	GovGoal	LA-MIN02-	Remediatic	3/4/2013	444	8/23/1983	3/21/2013	LA13FG20	WIPP/OPE	2.519892	26.04086	LA130167	########	WIPP	::
93153			S833937	SB02051	93157		791469	Nitrate	No	GovGoal	LA-MHD01	Remediatic	3/4/2013	444	8/23/1983	6/26/2013	LA13FG80	WIPP/OPE	3.400016	12.3413	LA130113	8/9/2013	WIPP	::
93154			S833937		93157		791470	Nitrate	No	GovGoal	LA-MIN02-	Remediatic	3/4/2013	444	8/23/1983	5/1/2013	LA13FG20	WIPP/OPE	6.840601	22.22276	LA130155	########	WIPP	::
93155			S833937		93157		791471	Nitrate	No	GovGoal	LA-MIN02-	Remediatic	3/4/2013	444	8/23/1983	4/25/2013	LA13FG20	WIPP/OPE	9.665643	43.6133	LA130155	########	WIPP	::
93156			S833937		93157		791472	Nitrate	No	GovGoal	LA-MIN02-	Remediatic	3/4/2013	444	8/23/1983	5/7/2013	LA13FG20	WIPP/OPE	2.519892	26.04086	LA130163	########	WIPP	::

PKG_ID	Related to	Intermedia	ParentID	Overpacke	Empty P	Empty Dau	C_ID	Salt Type	WasteLok	3706	Waste Stre	Type	RemedDate	Days Since	WasteGenDate	FGA_Date	HSG_BDR	Location	PECi	FGE	Shipment	Ship Date	Location C	Specific Lo
93080			S834633		93090		788185	Nitrate	No	GovGoal	LA-MHD01	Remediatic	2/25/2013	451	11/7/1983	6/26/2013	LA13FG80	WIPP/OPE	0.594809	3.887304	LA130107	8/1/2013	WIPP	::
93081			S834633	SB02058	93090		788186	Nitrate	No	GovGoal	LA-MHD01	Remediatic	2/25/2013	451	11/7/1983	7/3/2013	LA13FG20	WIPP/OPE	1.487953	14.95587	LA130120	########	WIPP	::
93082			S834633		93090		788187	Nitrate	No	GovGoal	LA-MIN02-	Remediatic	2/25/2013	451	11/7/1983	5/2/2013	LA13FG12	WIPP/OPE	4.699468	11.28612	LA130155	########	WIPP	::
93083			S834633		93090		788188	Nitrate	No	GovGoal	LA-MIN02-	Remediatic	2/25/2013	451	11/7/1983	5/2/2013	LA13FG12	WIPP/OPE	5.703469	6.398645	LA130155	########	WIPP	::
93084			S834633		93090		788230	Nitrate	No	GovGoal	LA-MIN02-	Remediatic	2/25/2013	451	11/7/1983	5/2/2013	LA13FG12	WIPP/OPE	5.083149	5.374766	LA130155	########	WIPP	::
93085			S834633		93090		788231	Nitrate	No	GovGoal	LA-MIN02-	Remediatic	2/25/2013	451	11/7/1983	4/25/2013	LA13FG20	WIPP/OPE	4.687824	24.65221	LA130171	########	WIPP	::
93086			S834633		93090		788232	Nitrate	No	GovGoal	LA-MIN02-	Remediatic	2/25/2013	451	11/7/1983	4/25/2013	LA13FG20	WIPP/OPE	4.897375	33.88795	LA130155	########	WIPP	::
93087			S834633		93090		788233	Nitrate	No	GovGoal	LA-MIN02-	Remediatic	2/25/2013	451	11/7/1983	5/2/2013	LA13FG12	WIPP/OPE	3.751301	18.81381	LA130179	########	WIPP	::
93088			S834633		93090		788234	Nitrate	No	GovGoal	LA-MIN02-	Remediatic	2/25/2013	451	11/7/1983	5/2/2013	LA13FG12	WIPP/OPE	6.83335	48.47917	LA130155	########	WIPP	::
93089			S834633		93090		788235	Nitrate	No	GovGoal	LA-MIN02-	Remediatic	2/25/2013	451	11/7/1983	5/2/2013	LA13FG12	WIPP/OPE	1.858218	8.969591	LA130155	########	WIPP	::
92932			S834406		92941		788217	Nitrate	No	GovGoal	LA-MIN02-	Remediatic	2/14/2013	462	9/20/1983	3/8/2013	LA13FG80	WIPP/OPE	3.824672	8.48951	LA130140	########	WIPP	::
92933			S834406		92941		791741	Nitrate	No	GovGoal	LA-MIN02-	Remediatic	2/14/2013	462	9/20/1983	3/28/2013	LA13FG20	WIPP/OPE	0.930185	1.336286	LA130137	########	WIPP	::
92934			S834406		92941		791742	Nitrate	No	GovGoal	LA-MIN02-	Remediatic	2/14/2013	462	9/20/1983	4/25/2013	LA13FG20	WIPP/OPE	2.122144	3.525479	LA130155	########	WIPP	::
92935			S834406		92941		791743	Nitrate	No	GovGoal	LA-MIN02-	Remediatic	2/14/2013	462	9/20/1983	5/2/2013	LA13FG12	WIPP/OPE	8.45804	31.62071	LA130155	########	WIPP	::
92936			S834406		92941		791744	Nitrate	No	GovGoal	LA-MIN02-	Remediatic	2/14/2013	462	9/20/1983	5/1/2013	LA13FG20	WIPP/OPE	9.28411	47.33044	LA130163	########	WIPP	::
92937			S834406		92941		791745	Nitrate	No	GovGoal	LA-MIN02-	Remediatic	2/14/2013	462	9/20/1983	5/7/2013	LA13FG20	WIPP/OPE	8.115294	25.46034	LA130135	########	WIPP	::
92938			S834406		92941		791746	Nitrate	No	GovGoal	LA-MIN02-	Remediatic	2/14/2013	462	9/20/1983	4/25/2013	LA13FG20	WIPP/OPE	3.512966	13.24823	LA130135	########	WIPP	::
92939			S834406		92941		791747	Nitrate	No	GovGoal	LA-MIN02-	Remediatic	2/14/2013	462	9/20/1983	4/3/2013	LA13FG20	WIPP/OPE	7.732294	31.23492	LA130163	########	WIPP	::
92940			S834406		92941		791748	Nitrate	No	GovGoal	LA-MIN02-	Remediatic	2/14/2013	462	9/20/1983	5/7/2013	LA13FG20	WIPP/OPE	3.677446	10.42133	LA130135	########	WIPP	::
90999			S881562		91005		787677	Nitrate	No	GovGoal	LA-MHD01	Remediatic	2/28/2012	814	7/25/1988	10/31/2012	LA12FG12	WIPP/OPE	0.606573	6.698893	LA120209	########	WIPP	::
91006			S881563		91012		787727	Nitrate	No	GovGoal	LA-MHD01	Remediatic	2/28/2012	814	6/1/1988	10/31/2012	LA12FG12	WIPP/OPE	2.866163	8.936656	LA120209	########	WIPP	::
90840			S832040		90844		787602	Nitrate	No	GovGoal	LA-MHD01	Remediatic	2/2/2012	840	1/25/1983	10/31/2012	LA12FG12	WIPP/OPE	2.560961	24.27274	LA120208	########	WIPP	::
90845			S832149		90854		787648	Nitrate	No	GovGoal	LA-MHD01	Remediatic	2/2/2012	840	11/8/1983	10/31/2012	LA12FG12	WIPP/OPE	0.68814	2.678319	LA120208	########	WIPP	::
90835			S832156	SB02011	90839		787423	Nitrate	No	GovGoal	LA-MHD01	Remediatic	2/1/2012	841	4/13/1983	5/14/2013	LA13FG20	WIPP/OPE	3.59568	13.17817	LA130083	########	WIPP	::
90814			S832448		90824		786030	Nitrate	No	GovGoal	LA-MHD01	Remediatic	1/30/2012	843	4/13/1983	10/31/2012	LA12FG12	WIPP/OPE	4.298796	6.52648	LA120209	########	WIPP	::
90801			S822838		90813		786389	Nitrate	No	GovGoal	LA-MHD01	Remediatic	1/27/2012	846	3/9/1982	10/31/2012	LA12FG12	WIPP/OPE	6.277219	26.40037	LA120208	########	WIPP	::
90752			S825639	SB02012	90761		786546	Nitrate	No	GovGoal	LA-MHD01	Remediatic	1/11/2012	862	12/28/1982	5/14/2013	LA13FG20	WIPP/OPE	0.899771	2.193136	LA130082	########	WIPP	::
90715			S824551		90726		787278	Nitrate	No	GovGoal	LA-MHD01	Remediatic	1/5/2012	868	8/31/1982	10/31/2012	LA12FG12	WIPP/OPE	2.358059	5.754339	LA130004	1/9/2013	WIPP	::
90712			S832340		90714		787276	Nitrate	No	GovGoal	LA-MHD01	Remediatic	1/4/2012	869	11/8/1983	10/31/2012	LA12FG12	WIPP/OPE	2.359132	8.180122	LA130005	########	WIPP	::
90315			S910171	SB01609	90319		787037	Nitrate	No	GovGoal	LA-MHD01	Remediatic	10/20/2011	945	1/2/1991	11/4/2011	LA11FG81	WIPP/OPE	2.406334	16.25099	LA120072	########	WIPP	::
68328	1		S891513		68358		733206	Nitrate	No	GovGoal	LA-MIN02-	Remediatic	9/7/2013	257	12/5/1989	12/20/2013	LA13FG12	WIPP/OPE	24.29729	118.508	LA140015	########	WIPP 7	15:5:M
68333	1		S846107		68359		735126	Nitrate	No	GovGoal	LA-MIN02-	Remediatic	9/11/2013	253	12/18/1984	12/20/2013	LA13FG12	WIPP/OPE	17.46563	118.9506	LA140017	########	WIPP 7	16:4:T
68394	1		S841320		68367		733252	Nitrate	No	GovGoal	LA-MIN02-	Remediatic	9/26/2013	238	9/23/1984	12/5/2013	LA13FG21	WIPP/OPE	2.999335	33.54307	LA140014	########	WIPP 7	10:6:M
68395	1		S825902		68518		733253	Nitrate	No	GovGoal	LA-MIN02-	Remediatic	10/29/2013	205	12/28/1982	12/5/2013	LA13FG21	WIPP/OPE	1.35933	7.07402	LA140014	########	WIPP 7	10:6:M
68422	1		S824208		68532		733278	Nitrate	No	GovGoal	LA-MIN02-	Remediatic	10/31/2013	203	9/1/1982	12/18/2013	LA13FG21	WIPP/OPE	6.715381	5.195714	LA140014	########	WIPP 7	10:6:B
68423	1		S824208		68532		733277	Nitrate	No	GovGoal	LA-MIN02-	Remediatic	10/31/2013	203	9/1/1982	12/18/2013	LA13FG21	WIPP/OPE	4.091242	0.816774	LA140014	########	WIPP 7	10:6:B
68424	1		S824208		68532		733280	Nitrate	No	GovGoal	LA-MIN02-	Remediatic	10/31/2013	203	9/1/1982	12/5/2013	LA13FG21	WIPP/OPE	7.99468	2.340478	LA140014	########	WIPP 7	10:6:B
68459	1		S823004		68438		796634	Nitrate	No	GovGoal	LA-MIN02-	Remediatic	9/26/2013	238	4/4/1982	12/10/2013	LA13FG21	WIPP/OPE	13.66003	38.17828	LA140016	########	WIPP 7	15:5:B
68494	1		S910170		68522		796681	Nitrate	No	GovGoal	LA-MIN02-	Remediatic	10/2/2013	232	1/2/1991	11/22/2013	LA13FG21	WIPP/OPE	21.43904	80.48614	LA140010	########	WIPP 7	2:6:T
68501	1		S910170		68522		796684	Nitrate	No	GovGoal	LA-MIN02-	Remediatic	10/2/2013	232	1/2/1991	10/31/2013	LA13FG21	WIPP/OPE	0.548761	6.035678	LA140014	########	WIPP 7	10:2:T
68511	1		S861975		68485		738836	Nitrate	No	GovGoal	LA-MIN02-	Remediatic	10/22/2013	212	4/8/1986	11/13/2013	LA13FG21	WIPP/OPE	2.870073	19.7439	LA140014	########	WIPP 7	10:6:M
68512	1		S825902		68518		738835	Nitrate	No	GovGoal	LA-MIN02-	Remediatic	10/29/2013	205	12/28/1982	12/5/2013	LA13FG21	WIPP/OPE	0.393916	4.405361	LA140014	########	WIPP 7	10:6:B
68513	1		S852883		68525		738827	Nitrate	No	GovGoal	LA-MIN02-	Remediatic	10/25/2013	209	5/13/1985	11/13/2013	LA13FG21	WIPP/OPE	5.231542	20.72698	LA140014	########	WIPP 7	10:6:M
68545	1		S846088		68527		797005	Nitrate	No	GovGoal	LA-MIN02-	Remediatic	10/24/2013	210	12/18/1984	12/6/2013	LA13FG12	WIPP/OPE	8.20996	92.54234	LA140011	########	WIPP 7	13:3:B
68548	1		S846088		68527		796972	Nitrate	No	GovGoal	LA-MIN02-	Remediatic	10/24/2013	210	12/18/1984	12/9/2013	LA13FG21	WIPP/OPE	17.25751	88.84226	LA140011	########	WIPP 7	13:3:B
68555	1		S852895		68598		797006	Nitrate	No	GovGoal	LA-MIN02-	Remediatic	11/7/2013	196	5/13/1985	11/22/2013	LA13FG21	WIPP/OPE	0.145869	1.439923	LA140015	########	WIPP 7	15:5:M
68573	1		S822952		68492		796586	Nitrate	No	GovGoal	LA-MIN02-	Remediatic	11/6/2013	197	4/4/1982	11/22/2013	LA13FG12	WIPP/OPE	2.933657	2.013352	LA140014	########	WIPP 7	10:4:T
68576	1		S825730		68517		796589	Nitrate	No	GovGoal	LA-MIN02-	Remediatic	10/30/2013	204	12/27/1982	11/15/2013	LA13FG21	WIPP/OPE	4.119849	5.618051	LA140011	########	WIPP 7	13:3:B
68577	1		S842181		68589		796595	Nitrate	No	GovGoal	LA-MIN02-	Remediatic	11/5/2013	198	9/23/1984	12/5/2013	LA13FG21	WIPP/OPE	9.827044	6.361296	LA140014	########	WIPP 7	10:6:B
68582	1		S833481		68599		796594	Nitrate	No	GovGoal	LA-MIN02-	Remediatic	11/8/2013	195	7/12/1983	12/5/2013	LA13FG21	WIPP/OPE	2.485734	28.85471	LA140014	########	WIPP 7	10:6:B
68605	1		S822952		68492		797052	Nitrate	No	GovGoal	LA-MIN02-	Remediatic	11/6/2013	197	4/4/1982	11/22/2013	LA13FG21	WIPP/OPE	2.979094	5.375866	LA140011	########	WIPP 7	5:1:T
68607	1		S822952		68492		797092	Nitrate	No	GovGoal	LA-MIN02-	Remediatic	11/6/2013	197	4/4/1982	11/22/2013	LA13FG21	WIPP/OPE	1.549426	3.07174	LA140017	########	WIPP 7	16:4:T
68609	1		S852895		68598		797094	Nitrate	No	GovGoal	LA-MIN02-	Remediatic	11/7/2013	196	5/13/1985	11/22/2013	LA13FG21	WIPP/OPE	0.157611	0.49931	LA140011	########	WIPP 7	13:3:B
68614	1		S864662		68594		797186	Nitrate	No	GovGoal	LA-MIN02-	Remediatic	11/6/2013	197	12/15/1986	11/22/2013	LA13FG21	WIPP/OPE	11.66715	17.04418	LA140010	########	WIPP 7	3:1:T
68616	1		S853771	SB02134	68591		797185	Nitrate	No	GovGoal	LA-MIN02-	Remediatic	11/5/2013	198	8/20/1985	11/22/2013	LA13FG21	WIPP/OPE	13.03183	50.36251	LA140013	########	WIPP 7	12:6:T
68618	1		S825810		68515		797240	Nitrate	No	GovGoal	LA-MIN02-	Remediatic	11/12/2013	191	12/27/1982	12/5/2013	LA13FG21	WIPP/OPE	23.02835	41.84674	LA140014	########	WIPP 7	10:6:B
68623	1		S870381		68639		797418	Nitrate	No	GovGoal	LA-MIN02-	Remediatic	11/11/2013	192	7/6/1987	11/25/2013	LA13FG21	WIPP/OPE	2.02955	22.69747	LA140010	########	WIPP 7	3:1:T
68626	1		S832144		68640		797417	Nitrate	No	GovGoal	LA-MIN02-	Remediatic	11/14/2013	189	12/29/1983	11/27/2013	LA13FG21	WIPP/OPE	1.924068	5.686592	LA140011	########	WIPP 7	13:3:M
68629	1		S853326		68595		797251	Nitrate	No	GovGoal	LA-MIN02-	Remediatic	11/13/2013	190	7/9/1985	12/9/2013	LA13FG21	WIPP/OPE	16.0797	86.92445	LA140011	########	WIPP 7	5:1:T
68635	1		S832499		68590		797243	Nitrate	No	GovGoal	LA-MIN02-	Remediatic	11/7/2013	196	4/12/1983	11/27/2013	LA13FG21	WIPP/OPE	3.006163	32.2226	LA140010	########	WIPP 7	3:3:T
68636	1		S832499		68590		797245	Nitrate	No	GovGoal	LA-MIN02-	Remediatic	11/7/2013	196	4/12/1983	12/6/2013	LA13FG12	WIPP/OPE	7.735166	21.23785	LA140010	########	WIPP 7	3:3:T
68647	1		S844689		68646		797467	Nitrate	No	GovGoal	LA-MIN02-	Remediatic	11/14/2013	189	5/9/1984	12/9/2013	LA13FG21	WIPP/OPE	19.37155	121.9474	LA140014	########	WIPP 7	10:4:T
68649	1		S844689		68646		797469	Nitrate	No	GovGoal	LA-MIN02-	Remediatic	11/14/2013	189	5/9/1984	12/9/2013	LA13FG21	WIPP/OPE	0.22292	2.580351	LA140015	########	WIPP 7	15:5:M

PKG_ID	Related to	Intermedia	ParentID	Overpacke	Empty P	Empty Dau	C_ID	Salt Type	WasteLok	3706	Waste Stre	Type	RemedDate	Days Since	WasteGenDate	FGA_Date	HSG_BDR	Location	PECi	FGE	Shipment	Ship Date	Location C	Specific Lo
68652	1		S852590		69001		797472	Nitrate	No	GovGoal	LA-MIN02-	Remediatic	11/19/2013	184	4/15/1985	12/2/2013	LA13FG21	WIPP/OPE	17.02577	97.92356	LA140010	########	WIPP 7	2:6:T
68653	1		S833846		68641		797079	Nitrate	No	GovGoal	LA-MIN02-	Remediatic	11/13/2013	190	9/21/1983	12/9/2013	LA13FG21	WIPP/OPE	19.08621	50.97702	LA140011	########	WIPP 7	13:3:M
68654	1		S853326		68595		797471	Nitrate	No	GovGoal	LA-MIN02-	Remediatic	11/13/2013	190	7/9/1985	12/6/2013	LA13FG12	WIPP/OPE	11.40206	39.84214	LA140011	########	WIPP 7	5:1:T
68655	1		S852590		69001		797074	Nitrate	No	GovGoal	LA-MIN02-	Remediatic	11/19/2013	184	4/15/1985	12/6/2013	LA13FG12	WIPP/OPE	10.94695	89.96643	LA140011	########	WIPP 7	5:1:T
68659	1		S853279		69003		797073	Nitrate	No	GovGoal	LA-MIN02-	Remediatic	11/19/2013	184	7/9/1985	12/6/2013	LA13FG12	WIPP/OPE	8.446659	39.34049	LA140011	########	WIPP 7	13:3:B
68660	1	68725	S855793			69120	797072	Nitrate	No	GovGoal	LA-MIN02-	Remediatic	12/4/2013	169	12/16/1985	1/3/2014	LA14FG20	WIPP/OPE	0.748398	7.857691	LA140017	########	WIPP 7	16:4:T
68666	1		S845072		68673		797715	Nitrate	No	GovGoal	LA-MIN02-	Remediatic	11/15/2013	188	7/24/1984	12/6/2013	LA13FG12	WIPP/OPE	8.19148	43.68727	LA140011	########	WIPP 7	13:3:M
68667	1		S853492		68674		797477	Nitrate	No	GovGoal	LA-MIN02-	Remediatic	11/15/2013	188	7/8/1985	12/2/2013	LA13FG21	WIPP/OPE	3.341098	3.657078	LA140016	########	WIPP 7	15:5:B
68668	1		S832150		69000		797478	Nitrate	No	GovGoal	LA-MIN02-	Remediatic	11/18/2013	185	1/25/1983	12/6/2013	LA13FG12	WIPP/OPE	15.60317	83.43464	LA140016	########	WIPP 7	15:5:B
68669	1		S853492		68674		797479	Nitrate	No	GovGoal	LA-MIN02-	Remediatic	11/15/2013	188	7/8/1985	12/2/2013	LA13FG21	WIPP/OPE	12.94065	70.89798	LA140014	########	WIPP 7	10:2:T
68670	1		S832150		69000		797480	Nitrate	No	GovGoal	LA-MIN02-	Remediatic	11/18/2013	185	1/25/1983	12/20/2013	LA13FG12	WIPP/OPE	26.91294	101.3786	LA140017	########	WIPP 7	16:4:T
68671	1		S863789		69101		797716	Nitrate	No	GovGoal	LA-MIN02-	Remediatic	11/21/2013	182	8/25/1986	12/6/2013	LA13FG12	WIPP/OPE	3.482297	16.35099	LA140010	########	WIPP 7	3:1:T
68672	1		S853279		69003		797481	Nitrate	No	GovGoal	LA-MIN02-	Remediatic	11/19/2013	184	7/9/1985	12/6/2013	LA13FG12	WIPP/OPE	6.72951	35.61199	LA140010	########	WIPP 7	3:3:T
68680	1		S863789		69101		797105	Nitrate	No	GovGoal	LA-MIN02-	Remediatic	11/21/2013	182	8/25/1986	12/6/2013	LA13FG12	WIPP/OPE	11.26901	40.97383	LA140014	########	WIPP 7	10:2:T
68687	1	68721	S870065			69106	797106	Nitrate	No	GovGoal	LA-MIN02-	Remediatic	11/22/2013	181	2/23/1987	12/13/2013	LA13FG21	WIPP/OPE	11.22808	67.65411	LA140016	########	WIPP 7	15:5:B
94152	1		S842528		94153		791051	Nitrate	No	GovGoal	LA-MIN02-	Remediatic	8/8/2013	287	3/12/1984	12/10/2013	LA13FG21	WIPP/OPE	6.365818	51.62061	LA140016	########	WIPP 7	15:5:B
92459		90316	S910171	SB50559	90319	92460	789760	Nitrate	Yes	GovGoal	LA-MIN02-	Remediatic	12/11/2012	527	1/2/1991	4/3/2014	LA14FG20	LANL/54-G	2.005417	9.616751			LANL	::
92472		90317	S910171	SB50559	90319	92473	789893	Nitrate	Yes	GovGoal	LA-MHD01	Remediatic	12/17/2012	521	1/2/1991	1/10/2014	LA14FG20	LANL/54-G	3.269701	11.91939			LANL	::
92669		90900	S823187	SB02203	90901	92670	791586	Nitrate	Yes	GovGoal	LA-MHD01	Remediatic	1/22/2013	485	5/16/1982	1/16/2014	LA14FG12	LANL/54-G	2.037812	8.630125			LANL	::
69230		90927	S860096	SB50072	90930	69239	798283	Nitrate	Yes	GovGoal	LA-CIN01.0	Remediatic	1/18/2014	124	2/19/1986	2/3/2014	LA14FG12	WCS/OPER	2.831174	31.9086	LW140032	########	WCS	::
92900		91010	S881563	SB50061	91012	92901	788177	Nitrate	Yes	GovGoal	LA-MHD01	Remediatic	2/10/2013	466	6/1/1988	1/21/2014	LA14FG12	LANL/54-G	6.267798	20.52095	LW140025	########	WCS	::
68457		90971	S881608		90975	68520	796632	Nitrate	Yes	GovGoal	LA-MIN02-	Remediatic	10/4/2013	230	11/7/1988	10/31/2013	LA13FG21	WIPP/OPE	10.03428	59.88604	LA130185	########	WIPP	::
93487		90986	S881569		90992	93488	788279	Nitrate	Yes	GovGoal	LA-MIN02-	Remediatic	4/15/2013	402	11/7/1988	5/13/2013	LA13FG20	WIPP/OPE	2.154676	12.96316	LA130149	########	WIPP	::
93465		90855	S834539	SB02067	90864	93466	791730	Nitrate	Yes	GovGoal	LA-MHD01	Remediatic	4/12/2013	405	11/8/1983	7/23/2013	LA13FG20	WIPP/OPE	2.982548	5.175148	LA130141	########	WIPP	::
93442		91019	S851506	SB02067	91020	93443	791754	Nitrate	Yes	GovGoal	LA-MHD01	Remediatic	4/10/2013	407	2/11/1985	7/24/2013	LA13FG20	WIPP/OPE	1.378834	3.338957	LA130141	########	WIPP	::
92919		90996	S851432		90998	92920	788642	Nitrate	Yes	GovGoal	LA-MIN02-	Remediatic	2/12/2013	464	2/11/1985	3/8/2013	LA13FG80	WIPP/OPE	21.33185	76.6086	LA130151	########	WIPP	::
92921		90990	S881569		90992	92922	788644	Nitrate	Yes	GovGoal	LA-MIN02-	Remediatic	2/12/2013	464	11/7/1988	3/1/2013	LA13FG80	WIPP/OPE	13.798	63.54008	LA130137	########	WIPP	::
92909		91007	S881563		91012	92910	791633	Nitrate	Yes	GovGoal	LA-MIN02-	Remediatic	2/11/2013	465	6/1/1988	3/1/2013	LA13FG12	WIPP/OPE	17.61003	100.6847	LA130137	########	WIPP	::
92911		90995	S851432	SB02093	90998	92912	791635	Nitrate	Yes	GovGoal	LA-MIN02-	Remediatic	2/11/2013	465	2/11/1985	4/5/2013	LA13FG80	WIPP/OPE	13.39584	147.8837	LA130167	########	WIPP	::
92913		90989	S881569		90992	92914	791637	Nitrate	Yes	GovGoal	LA-MIN02-	Remediatic	2/11/2013	465	11/7/1988	3/8/2013	LA13FG80	WIPP/OPE	13.83003	76.99666	LA130137	########	WIPP	::
92915		91003	S881562		91005	92916	791711	Nitrate	Yes	GovGoal	LA-MIN02-	Remediatic	2/11/2013	465	7/25/1988	3/8/2013	LA13FG80	WIPP/OPE	20.36868	134.6611	LA130137	########	WIPP	::
92917		90323	S910172		90325	92918	791713	Nitrate	Yes	GovGoal	LA-MIN02-	Remediatic	2/11/2013	465	1/2/1991	3/8/2013	LA13FG80	WIPP/OPE	4.271247	28.97084	LA130137	########	WIPP	::
92896		90988	S881569		90992	92897	788173	Nitrate	Yes	GovGoal	LA-MIN02-	Remediatic	2/10/2013	466	11/7/1988	3/8/2013	LA13FG80	WIPP/OPE	18.16957	59.35303	LA130149	########	WIPP	::
92898		91009	S881563		91012	92899	788175	Nitrate	Yes	GovGoal	LA-MIN02-	Remediatic	2/10/2013	466	6/1/1988	3/1/2013	LA13FG80	WIPP/OPE	8.070699	32.71198	LA130137	########	WIPP	::
92902		91011	S881563		91012	92904	788179	Nitrate	Yes	GovGoal	LA-MIN02-	Remediatic	2/10/2013	466	6/1/1988	3/1/2013	LA13FG12	WIPP/OPE	2.595437	29.02608	LA130135	########	WIPP	::
92905		91017	S851506		91020	92906	788181	Nitrate	Yes	GovGoal	LA-MIN02-	Remediatic	2/10/2013	466	2/11/1985	3/1/2013	LA13FG80	WIPP/OPE	13.30275	63.37313	LA130136	########	WIPP	::
92907		90987	S881569		90992	92908	788183	Nitrate	Yes	GovGoal	LA-MIN02-	Remediatic	2/10/2013	466	11/7/1988	3/14/2013	LA13FG80	WIPP/OPE	12.17634	32.80628	LA130136	########	WIPP	::
92888		90973	S881608		90975	92889	791314	Nitrate	Yes	GovGoal	LA-MIN02-	Remediatic	2/9/2013	467	11/7/1988	3/1/2013	LA13FG12	WIPP/OPE	10.05997	26.41542	LA130135	########	WIPP	::
92890		91002	S881562		91005	92891	791316	Nitrate	Yes	GovGoal	LA-MIN02-	Remediatic	2/9/2013	467	7/25/1988	3/1/2013	LA13FG80	WIPP/OPE	7.20877	21.87185	LA130137	########	WIPP	::
92892		91018	S851506		91020	92893	791318	Nitrate	Yes	GovGoal	LA-MIN02-	Remediatic	2/9/2013	467	2/11/1985	3/14/2013	LA13FG80	WIPP/OPE	8.507518	27.37741	LA130137	########	WIPP	::
92894		90997	S851432	SB02052	90998	92895	791381	Nitrate	Yes	GovGoal	LA-MHD01	Remediatic	2/9/2013	467	2/11/1985	6/24/2013	LA13FG12	WIPP/OPE	4.457459	15.66522	LA130115	########	WIPP	::
92680		90934	S863696		90935	92681	790147	Nitrate	Yes	GovGoal	LA-MIN02-	Remediatic	1/24/2013	483	8/25/1986	3/28/2013	LA13FG20	WIPP/OPE	2.894265	6.088333	LA130151	########	WIPP	::
92682		90885	S833261		90887	92683	790149	Nitrate	Yes	GovGoal	LA-MIN02-	Remediatic	1/24/2013	483	5/16/1983	3/21/2013	LA13FG20	WIPP/OPE	11.93801	18.66192	LA130137	########	WIPP	::
92684		90932	S863696		90935	92685	790201	Nitrate	Yes	GovGoal	LA-MIN02-	Remediatic	1/24/2013	483	8/25/1986	3/1/2013	LA13FG80	WIPP/OPE	6.445626	25.94186	LA130136	########	WIPP	::
92671		90886	S833261	SB02054	90887	92673	790057	Nitrate	Yes	GovGoal	LA-MHD01	Remediatic	1/23/2013	484	5/16/1983	6/24/2013	LA13FG12	WIPP/OPE	1.087198	0.907677	LA130115	########	WIPP	::
92672		90886	S833261		90887	92673	790058	Nitrate	Yes	GovGoal	LA-MIN02-	Remediatic	1/23/2013	484	5/16/1983	4/3/2013	LA13FG20	WIPP/OPE	2.693529	5.566559	LA130179	########	WIPP	::
92674		90929	S860096		90930	92675	790060	Nitrate	Yes	GovGoal	LA-MIN02-	Remediatic	1/23/2013	484	2/19/1986	3/28/2013	LA13FG20	WIPP/OPE	2.029112	9.665826	LA130137	########	WIPP	::
92676		90969	S883130		90970	92677	790062	Nitrate	Yes	GovGoal	LA-MIN02-	Remediatic	1/23/2013	484	11/7/1988	3/1/2013	LA13FG80	WIPP/OPE	4.882524	11.29887	LA130149	########	WIPP	::
92678		90957	S863787		90958	92679	790064	Nitrate	Yes	GovGoal	LA-MIN02-	Remediatic	1/23/2013	484	8/25/1986	5/24/2013	LA13FG20	WIPP/OPE	6.666225	14.60715	LA130149	########	WIPP	::
92665		90896	S832155	SB02093	90898	92666	791582	Nitrate	Yes	GovGoal	LA-MIN02-	Remediatic	1/22/2013	485	4/13/1983	3/1/2013	LA13FG80	WIPP/OPE	2.412775	26.98327	LA130167	########	WIPP	::
92667		90893	S845201		90894	92668	791584	Nitrate	Yes	GovGoal	LA-MIN02-	Remediatic	1/22/2013	485	7/24/1984	8/20/2013	LA13FG12	WIPP/OPE	20.70733	70.80993	LA130184	########	WIPP	::
92570		90836	S832156		90839	92571	789652	Nitrate	Yes	GovGoal	LA-MIN02-	Remediatic	1/13/2013	494	4/13/1983	3/15/2013	LA13FG20	WIPP/OPE	2.973933	7.220394	LA130135	########	WIPP	::
92572		90849	S832149		90854	92573	790133	Nitrate	Yes	GovGoal	LA-MIN02-	Remediatic	1/13/2013	494	11/8/1983	3/14/2013	LA13FG80	WIPP/OPE	5.808707	15.72643	LA130136	########	WIPP	::
92574		90851	S832149		90854	92575	790135	Nitrate	Yes	GovGoal	LA-MIN02-	Remediatic	1/13/2013	494	11/8/1983	3/15/2013	LA13FG20	WIPP/OPE	3.143665	6.512337	LA130140	########	WIPP	::
92576		90837	S832156		90839	92577	788763	Nitrate	Yes	GovGoal	LA-MIN02-	Remediatic	1/13/2013	494	4/13/1983	3/15/2013	LA13FG20	WIPP/OPE	5.423793	2.31308	LA130140	########	WIPP	::
92578		90852	S832149		90854	92579	788765	Nitrate	Yes	GovGoal	LA-MIN02-	Remediatic	1/13/2013	494	11/8/1983	3/14/2013	LA13FG80	WIPP/OPE	4.14256	6.048082	LA130140	########	WIPP	::
92580		90881	S843962		90882	92581	788767	Nitrate	Yes	GovGoal	LA-MIN02-	Remediatic	1/13/2013	494	3/13/1984	3/14/2013	LA13FG80	WIPP/OPE	3.518518	13.61972	LA130137	########	WIPP	::
92559		90805	S822838	SB02051	90813	92560	790100	Nitrate	Yes	GovGoal	LA-MHD01	Remediatic	1/12/2013	495	3/9/1982	6/26/2013	LA13FG80	WIPP/OPE	6.006587	18.88225	LA130113	8/9/2013	WIPP	::
92561		90812	S822838		90813	92562	790102	Nitrate	Yes	GovGoal	LA-MHD01	Remediatic	1/12/2013	495	3/9/1982	6/26/2013	LA13FG80	WIPP/OPE	9.706225	49.58983	LA130103	########	WIPP	::
92563		90823	S832448	SB02052	90824	92564	790104	Nitrate	Yes	GovGoal	LA-MHD01	Remediatic	1/12/2013	495	4/13/1983	6/24/2013	LA13FG12	WIPP/OPE	3.745183	8.139236	LA130115	########	WIPP	::
92565		90819	S832448		90824	92566	790106	Nitrate	Yes	GovGoal	LA-MIN02-	Remediatic	1/12/2013	495	4/13/1983	3/14/2013	LA13FG80	WIPP/OPE	3.512115	5.874768	LA130135	########	WIPP	::
92567		90817	S832448	SB02089	90824	92568	790108	Nitrate	Yes	GovGoal	LA-MIN02-	Remediatic	1/12/2013	495	4/13/1983	3/21/2013	LA13FG20	WIPP/OPE	6.99396	6.444193	LA130168	########	WIPP	::
92555		90809	S822838		90813	92556	789527	Nitrate	Yes	GovGoal	LA-MIN02-	Remediatic	1/11/2013	496	3/9/1982	3/15/2013	LA13FG20	WIPP/OPE	7.426438	36.92268	LA130125	########	WIPP	::

PKG_ID	Related to	Intermedia	ParentID	Overpacke	Empty P	Empty Dau	C_ID	Salt Type	WasteLok	3706	Waste Stre	Type	RemedDate	Days Since	WasteGenDate	FGA_Date	HSG_BDR	Location	PECi	FGE	Shipment	Ship Date	Location C	Specific Lo
92557		90758	S825639		90761	92558	789529	Nitrate	Yes	GovGoal	LA-MIN02-	Remediatic	1/11/2013	496	12/28/1982	3/15/2013	LA13FG20	WIPP/OPE	3.848122	13.07427	LA130136	########	WIPP	::
92540		90757	S825639		90761	92541	790097	Nitrate	Yes	GovGoal	LA-MIN02-	Remediatic	1/9/2013	498	12/28/1982	3/15/2013	LA13FG20	WIPP/OPE	2.213757	5.705828	LA130135	########	WIPP	::
92492		90725	S824551		90726	92493	791482	Nitrate	Yes	GovGoal	LA-MHD01	Remediatic	12/19/2012	519	8/31/1982	2/1/2013	LA13FG20	WIPP/OPE	5.540742	61.16198	LA130050	########	WIPP	::
92494		90724	S824551		90726	92497	791484	Nitrate	Yes	GovGoal	LA-MHD01	Remediatic	12/19/2012	519	8/31/1982	2/1/2013	LA13FG20	WIPP/OPE	0.191348	0.2	LA130031	########	WIPP	::
92495		90724	S824551		90726	92497	791485	Nitrate	Yes	GovGoal	LA-MIN02-	Remediatic	12/19/2012	519	8/31/1982	7/1/2013	LA13FG20	WIPP/OPE	3.567205	5.712226	LA130129	9/4/2013	WIPP	::
92496		90724	S824551		90726	92497	791486	Nitrate	Yes	GovGoal	LA-MIN02-	Remediatic	12/19/2012	519	8/31/1982	7/1/2013	LA13FG20	WIPP/OPE	3.270353	4.934437	LA130132	9/9/2013	WIPP	::
92476		90720	S824551		90726	92478	790024	Nitrate	Yes	GovGoal	LA-MHD01	Remediatic	12/18/2012	520	8/31/1982	2/6/2013	LA13FG80	WIPP/OPE	0.213785	0.365086	LA130040	########	WIPP	::
92477		90720	S824551		90726	92478	791505	Nitrate	Yes	GovGoal	LA-MIN02-	Remediatic	12/18/2012	520	8/31/1982	7/10/2013	LA13FG20	WIPP/OPE	3.813478	9.287569	LA130135	########	WIPP	::
92479		90721	S824551		90726	92480	791507	Nitrate	Yes	GovGoal	LA-MHD01	Remediatic	12/18/2012	520	8/31/1982	2/8/2013	LA13FG20	WIPP/OPE	0.720175	8.054083	LA130040	########	WIPP	::
92481		90719	S824551	SB01933	90726	92483	791509	Nitrate	Yes	GovGoal	LA-MHD01	Remediatic	12/18/2012	520	8/31/1982	1/22/2013	LA13FG20	WIPP/OPE	0.38345	0.218837	LA130023	########	WIPP	::
92482		90719	S824551		90726	92483	791510	Nitrate	Yes	GovGoal	LA-MIN02-	Remediatic	12/18/2012	520	8/31/1982	7/10/2013	LA13FG20	WIPP/OPE	4.168867	4.195572	LA130135	########	WIPP	::
92484		90722	S824551	SB01967	90726	92485	791512	Nitrate	Yes	GovGoal	LA-MHD01	Remediatic	12/18/2012	520	8/31/1982	2/1/2013	LA13FG20	WIPP/OPE	1.210292	2.254713	LA130046	5/8/2013	WIPP	::
92486		90728	S832147	SB01966	90729	92487	791514	Nitrate	Yes	GovGoal	LA-MHD01	Remediatic	12/18/2012	520	1/25/1983	2/6/2013	LA13FG80	WIPP/OPE	1.026378	2.421062	LA130047	5/9/2013	WIPP	::
92488		90723	S824551	SB01977	90726	92490	791516	Nitrate	Yes	GovGoal	LA-MHD01	Remediatic	12/18/2012	520	8/31/1982	2/6/2013	LA13FG80	WIPP/OPE	0.422687	1.619585	LA130058	########	WIPP	::
92489		90723	S824551		90726	92490	791517	Nitrate	Yes	GovGoal	LA-MIN02-	Remediatic	12/18/2012	520	8/31/1982	7/10/2013	LA13FG20	WIPP/OPE	18.02383	53.96147	LA130163	########	WIPP	::
92466		90324	S910172		90325	92467	789766	Nitrate	Yes	GovGoal	LA-MHD01	Remediatic	12/17/2012	521	1/2/1991	2/6/2013	LA13FG80	WIPP/OPE	2.451282	10.3477	LA130031	########	WIPP	::
92468		90718	S824551	SB01937	90726	92471	789768	Nitrate	Yes	GovGoal	LA-MHD01	Remediatic	12/17/2012	521	8/31/1982	1/24/2013	LA13FG12	WIPP/OPE	0.044622	0.088581	LA130032	########	WIPP	::
92469		90718	S824551		90726	92471	789769	Nitrate	Yes	GovGoal	LA-MIN02-	Remediatic	12/17/2012	521	8/31/1982	7/10/2013	LA13FG20	WIPP/OPE	6.160449	37.87631	LA130180	########	WIPP	::
92470		90718	S824551		90726	92471	789770	Nitrate	Yes	GovGoal	LA-MIN02-	Remediatic	12/17/2012	521	8/31/1982	7/10/2013	LA13FG20	WIPP/OPE	0.848167	9.36859	LA130135	########	WIPP	::
92463		90713	S832340		90714	92464	789764	Nitrate	Yes	GovGoal	LA-MHD01	Remediatic	12/13/2012	525	11/8/1983	2/7/2013	LA13FG20	WIPP/OPE	0.69516	2.822353	LA130034	########	WIPP	::
92461		90318	S910171		90319	92462	789762	Nitrate	Yes	GovGoal	LA-MHD01	Remediatic	12/12/2012	526	1/2/1991	2/1/2013	LA13FG80	WIPP/OPE	2.359206	26.05037	LA130013	########	WIPP	::
92374		90933	S863696		90935	92375	790010	Nitrate	Yes	GovGoal	LA-MIN02-	Remediatic	11/14/2012	554	8/25/1986	9/13/2013	LA13FG12	WIPP/OPE	12.01016	48.64073	LA130169	########	WIPP	::
92376		90942	S863788		90943	92377	790072	Nitrate	Yes	GovGoal	LA-MHD01	Remediatic	11/14/2012	554	8/25/1986	2/6/2013	LA13FG80	WIPP/OPE	4.307602	16.19596	LA130034	########	WIPP	::
92378		91001	S881562		91005	92379	790074	Nitrate	Yes	GovGoal	LA-MHD01	Remediatic	11/14/2012	554	7/25/1988	2/6/2013	LA13FG80	WIPP/OPE	4.965872	19.43423	LA130050	########	WIPP	::
92380		90991	S881569		90992	92381	790076	Nitrate	Yes	GovGoal	LA-MIN02-	Remediatic	11/14/2012	554	11/7/1988	9/9/2013	LA13FG20	WIPP/OPE	4.713333	15.18071	LA130174	########	WIPP	::
92355		90884	S833261		90887	92356	789997	Nitrate	Yes	GovGoal	LA-MHD01	Remediatic	11/13/2012	555	5/16/1983	1/24/2013	LA13FG80	WIPP/OPE	8.334658	12.19322	LA130031	########	WIPP	::
92357		90941	S863788	SB02087	90943	92359	789999	Nitrate	Yes	GovGoal	LA-MIN02-	Remediatic	11/13/2012	555	8/25/1986	9/13/2013	LA13FG12	WIPP/OPE	1.759195	19.41576	LA130168	########	WIPP	::
92358		90941	S863788		90943	92359	790000	Nitrate	Yes	GovGoal	LA-MHD01	Remediatic	11/13/2012	555	8/25/1986	1/31/2013	LA13FG20	WIPP/OPE	0.3621	1.716318	LA130096	########	WIPP	::
92360		90890	S823194	SB02092	90891	92361	790002	Nitrate	Yes	GovGoal	LA-MIN02-	Remediatic	11/13/2012	555	5/16/1982	9/9/2013	LA13FG20	WIPP/OPE	6.084014	14.62914	LA130167	########	WIPP	::
92362		90897	S832155	SB02087	90898	92363	790004	Nitrate	Yes	GovGoal	LA-MIN02-	Remediatic	11/13/2012	555	4/13/1983	9/13/2013	LA13FG12	WIPP/OPE	7.431149	39.01266	LA130168	########	WIPP	::
92364		90972	S881608		90975	92365	790006	Nitrate	Yes	GovGoal	LA-MHD01	Remediatic	11/13/2012	555	11/7/1988	2/1/2013	LA13FG80	WIPP/OPE	5.215218	27.35955	LA130034	########	WIPP	::
92366		90974	S881608		90975	92373	790008	Nitrate	Yes	GovGoal	LA-MIN02-	Remediatic	11/13/2012	555	11/7/1988	9/9/2013	LA13FG20	WIPP/OPE	10.10126	58.43239	LA130161	########	WIPP	::
92339		90869	S832464	SB01967	90871	92340	788413	Nitrate	Yes	GovGoal	LA-MHD01	Remediatic	11/8/2012	560	12/29/1983	3/21/2013	LA13FG20	WIPP/OPE	1.039516	2.048631	LA130046	5/8/2013	WIPP	::
92341		90867	S832464		90871	92342	788415	Nitrate	Yes	GovGoal	LA-MHD01	Remediatic	11/8/2012	560	12/29/1983	2/1/2013	LA13FG20	WIPP/OPE	3.225996	5.695865	LA130034	########	WIPP	::
92343		90876	S844213	SB01932	90879	92344	789883	Nitrate	Yes	GovGoal	LA-MHD01	Remediatic	11/8/2012	560	5/9/1984	1/22/2013	LA13FG20	WIPP/OPE	12.46932	74.81251	LA130025	########	WIPP	::
92345		90868	S832464	SB02093	90871	92346	789885	Nitrate	Yes	GovGoal	LA-MIN02-	Remediatic	11/8/2012	560	12/29/1983	9/9/2013	LA13FG20	WIPP/OPE	1.039288	9.846836	LA130167	########	WIPP	::
92347		90838	S832156		90839	92348	789953	Nitrate	Yes	GovGoal	LA-MIN02-	Remediatic	11/8/2012	560	4/13/1983	3/15/2013	LA13FG20	WIPP/OPE	2.200969	4.221326	LA130125	########	WIPP	::
92349		90878	S844213	SB01932	90879	92350	789955	Nitrate	Yes	GovGoal	LA-MHD01	Remediatic	11/8/2012	560	5/9/1984	1/22/2013	LA13FG20	WIPP/OPE	4.594624	16.20642	LA130025	########	WIPP	::
92351		90937	S871844	SB01933	90938	92352	789957	Nitrate	Yes	GovGoal	LA-MHD01	Remediatic	11/8/2012	560	4/13/1987	1/22/2013	LA13FG20	WIPP/OPE	5.686312	33.99285	LA130023	########	WIPP	::
92290		90850	S832149	SB02091	90854	92291	789933	Nitrate	Yes	GovGoal	LA-MIN02-	Remediatic	11/1/2012	567	11/8/1983	9/9/2013	LA13FG20	WIPP/OPE	9.900904	23.94125	LA130170	########	WIPP	::
92292		90858	S834539	SB02089	90864	92293	789935	Nitrate	Yes	GovGoal	LA-MIN02-	Remediatic	11/1/2012	567	11/8/1983	9/9/2013	LA13FG20	WIPP/OPE	2.163092	20.93811	LA130168	########	WIPP	::
92294		90853	S832149		90854	92295	789937	Nitrate	Yes	GovGoal	LA-MIN02-	Remediatic	11/1/2012	567	11/8/1983	9/9/2013	LA13FG20	WIPP/OPE	0.662495	6.417903	LA130161	########	WIPP	::
92296		90866	S832464		90871	92297	789992	Nitrate	Yes	GovGoal	LA-MIN02-	Remediatic	11/1/2012	567	12/29/1983	9/13/2013	LA13FG12	WIPP/OPE	2.435362	7.140367	LA130161	########	WIPP	::
92245		90899	S823187		90901	92247	789946	Nitrate	Yes	GovGoal	LA-MIN02-	Remediatic	10/25/2012	574	5/16/1982	9/13/2013	LA13FG12	WIPP/OPE	6.922787	35.45254	LA130161	########	WIPP	::
92246		90899	S823187		90901	92247	789947	Nitrate	Yes	GovGoal	LA-MIN02-	Remediatic	10/25/2012	574	5/16/1982	3/1/2013	LA13FG80	WIPP/OPE	5.611599	21.53933	LA130130	9/5/2013	WIPP	::
92248		91013	S851506	SB02091	91020	92250	789949	Nitrate	Yes	GovGoal	LA-MIN02-	Remediatic	10/25/2012	574	2/11/1985	9/9/2013	LA13FG20	WIPP/OPE	3.234957	24.43571	LA130170	########	WIPP	::
92249		91013	S851506		91020	92250	789950	Nitrate	Yes	GovGoal	LA-MIN02-	Remediatic	10/25/2012	574	2/11/1985	1/24/2013	LA13FG80	WIPP/OPE	1.63899	10.08098	LA130130	9/5/2013	WIPP	::
92251		90936	S871844		90938	92253	789952	Nitrate	Yes	GovGoal	LA-MIN02-	Remediatic	10/25/2012	574	4/13/1987	1/15/2013	LA13FG80	WIPP/OPE	14.97024	61.53618	LA130131	9/6/2013	WIPP	::
92252		90936	S871844		90938	92253	790179	Nitrate	Yes	GovGoal	LA-MIN02-	Remediatic	10/25/2012	574	4/13/1987	3/14/2013	LA13FG80	WIPP/OPE	2.968658	9.298968	LA130130	9/5/2013	WIPP	::
92239		90925	S862411		90926	92240	789942	Nitrate	Yes	GovGoal	LA-MIN02-	Remediatic	10/24/2012	575	5/12/1986	1/15/2013	LA13FG80	WIPP/OPE	13.48993	93.98106	LA130131	9/6/2013	WIPP	::
92241		90892	S845201		90894	92243	789944	Nitrate	Yes	GovGoal	LA-MIN02-	Remediatic	10/24/2012	575	7/24/1984	9/13/2013	LA13FG12	WIPP/OPE	14.01419	61.33461	LA130169	########	WIPP	::
92229		90888	S823194		90891	92230	788798	Nitrate	Yes	GovGoal	LA-MIN02-	Remediatic	10/23/2012	576	5/16/1982	9/13/2013	LA13FG12	WIPP/OPE	11.28034	61.16884	LA130169	########	WIPP	::
92231		90993	S851432		90998	92232	788800	Nitrate	Yes	GovGoal	LA-MIN02-	Remediatic	10/23/2012	576	2/11/1985	9/9/2013	LA13FG20	WIPP/OPE	3.335212	18.29183	LA130173	########	WIPP	::
92233		90939	S863788		90943	92234	788802	Nitrate	Yes	GovGoal	LA-MIN02-	Remediatic	10/23/2012	576	8/25/1986	9/9/2013	LA13FG20	WIPP/OPE	3.8709	14.44595	LA130159	########	WIPP	::
92235		90965	S883130		90970	92236	788804	Nitrate	Yes	GovGoal	LA-MIN02-	Remediatic	10/23/2012	576	11/7/1988	3/22/2013	LA13FG20	WIPP/OPE	22.75644	136.1275	LA130129	9/4/2013	WIPP	::
92237		90895	S832155		90898	92238	789940	Nitrate	Yes	GovGoal	LA-MIN02-	Remediatic	10/23/2012	576	4/13/1983	3/28/2013	LA13FG20	WIPP/OPE	8.198367	47.26643	LA130125	########	WIPP	::
92227		90953	S863787	SB02089	90958	92228	789691	Nitrate	Yes	GovGoal	LA-MIN02-	Remediatic	10/22/2012	577	8/25/1986	9/9/2013	LA13FG20	WIPP/OPE	1.894512	4.684084	LA130168	########	WIPP	::
92215		90865	S832464		90871	92218	789792	Nitrate	Yes	GovGoal	LA-MIN02-	Remediatic	10/18/2012	581	12/29/1983	5/3/2013	LA13FG20	WIPP/OPE	1.790688	5.754478	LA130134	########	WIPP	::
92216		90865	S832464		90871	92218	789793	Nitrate	Yes	GovGoal	LA-MIN02-	Remediatic	10/18/2012	581	12/29/1983	5/9/2013	LA13FG20	WIPP/OPE	1.050486	3.230944	LA130134	########	WIPP	::
92217		90865	S832464		90871	92218	789794	Nitrate	Yes	GovGoal	LA-MIN02-	Remediatic	10/18/2012	581	12/29/1983	5/9/2013	LA13FG20	WIPP/OPE	0.874491	1.602034	LA130125	########	WIPP	::
92219		90880	S843962		90882	92222	789796	Nitrate	Yes	GovGoal	LA-MIN02-	Remediatic	10/18/2012	581	3/13/1984	5/17/2013	LA13FG20	WIPP/OPE	1.688636	5.927937	LA130129	9/4/2013	WIPP	::
92220		90880	S843962		90882	92222	789797	Nitrate	Yes	GovGoal	LA-MIN02-	Remediatic	10/18/2012	581	3/13/1984	5/9/2013	LA13FG20	WIPP/OPE	2.647241	13.04867	LA130128	9/3/2013	WIPP	::
92221		90880	S843962	SB02094	90882	92222	789798	Nitrate	Yes	GovGoal	LA-MIN02-	Remediatic	10/18/2012	581	3/13/1984	8/20/2013	LA13FG12	WIPP/OPE	0.748623	2.785658	LA130172	########	WIPP	::

PKG_ID	Related to	Intermedia	ParentID	Overpacke	Empty P	Empty Dau	C_ID	Salt Type	WasteLok	3706	Waste Stre	Type	RemedDate	Days Since	WasteGenDate	FGA_Date	HSG_BDR	Location	PECi	FGE	Shipment	Ship Date	Location C	Specific Lo
92210		90727	S832147		90729	92214	788997	Nitrate	Yes	GovGoal	LA-MIN02-	Remediatic	10/17/2012	582	1/25/1983	9/26/2013	LA13FG21(	WIPP/OPE	1.2121	6.280839	LA130161	########	WIPP	::
92211		90727	S832147		90729	92214	788998	Nitrate	Yes	GovGoal	LA-MIN02-	Remediatic	10/17/2012	582	1/25/1983	2/1/2013	LA13FG80(	WIPP/OPE	0.93154	4.581899	LA130131	9/6/2013	WIPP	::
92212		90727	S832147	SB02080	90729	92214	788999	Nitrate	Yes	GovGoal	LA-MIN02-	Remediatic	10/17/2012	582	1/25/1983	2/1/2013	LA13FG80(	WIPP/OPE	0.788905	8.575394	LA130153	########	WIPP	::
92213		90727	S832147		90729	92214	789000	Nitrate	Yes	GovGoal	LA-MIN02-	Remediatic	10/17/2012	582	1/25/1983	3/22/2013	LA13FG20	WIPP/OPE	2.276918	12.49708	LA130134	########	WIPP	::
92202		90877	S844213	SB01933	90879	92203	791476	Nitrate	Yes	GovGoal	LA-MHD01	Remediatic	10/15/2012	584	5/9/1984	1/22/2013	LA13FG20(	WIPP/OPE	12.1269	47.96202	LA130023	########	WIPP	::
92204		90968	S883130	SB01966	90970	92205	791478	Nitrate	Yes	GovGoal	LA-MHD01	Remediatic	10/15/2012	584	11/7/1988	2/1/2013	LA13FG80(	WIPP/OPE	2.520582	27.83048	LA130047	5/9/2013	WIPP	::
92206		91000	S881562	SB02028	91005	92208	791480	Nitrate	Yes	GovGoal	LA-MHD01	Remediatic	10/15/2012	584	7/25/1988	4/30/2013	LA13FG20(	WIPP/OPE	15.96043	86.11914	LA130081	########	WIPP	::
92195		90862	S834539	SB02027	90864	92196	791216	Nitrate	Yes	GovGoal	LA-MHD01	Remediatic	10/11/2012	588	11/8/1983	5/9/2013	LA13FG20	WIPP/OPE	8.215328	28.22187	LA130105	########	WIPP	::
92197		90863	S834539		90864	92198	791218	Nitrate	Yes	GovGoal	LA-MHD01	Remediatic	10/11/2012	588	11/8/1983	2/1/2013	LA13FG20(	WIPP/OPE	4.21387	13.76463	LA130014	########	WIPP	::
92181		90848	S832149		90854	92182	788847	Nitrate	Yes	GovGoal	LA-MHD01	Remediatic	10/9/2012	590	11/8/1983	2/1/2013	LA13FG20(	WIPP/OPE	9.710889	32.54143	LA130031	########	WIPP	::
92183		90860	S834539		90864	92185	788849	Nitrate	Yes	GovGoal	LA-MHD01	Remediatic	10/9/2012	590	11/8/1983	2/1/2013	LA13FG80(	WIPP/OPE	0.157053	0.521675	LA130050	########	WIPP	::
92184		90860	S834539		90864	92185	788850	Nitrate	Yes	GovGoal	LA-MHD01	Remediatic	10/9/2012	590	11/8/1983	2/14/2013	LA13FG20	WIPP/OPE	8.84325	33.63145	LA130092	########	WIPP	::
92186		90842	S832040		90844	92187	788852	Nitrate	Yes	GovGoal	LA-MHD01	Remediatic	10/9/2012	590	1/25/1983	2/6/2013	LA13FG80(	WIPP/OPE	11.15331	123.1301	LA130103	########	WIPP	::
92188		90861	S834539	SB01966	90864	92189	788891	Nitrate	Yes	GovGoal	LA-MHD01	Remediatic	10/9/2012	590	11/8/1983	2/1/2013	LA13FG20(	WIPP/OPE	7.008815	21.75971	LA130047	5/9/2013	WIPP	::
92190		90841	S832040	SB01984	90844	92191	788893	Nitrate	Yes	GovGoal	LA-MHD01	Remediatic	10/9/2012	590	1/25/1983	2/1/2013	LA13FG20(	WIPP/OPE	11.39985	72.07157	LA130062	6/5/2013	WIPP	::
92192		90956	S863787		90958	92193	788895	Nitrate	Yes	GovGoal	LA-MHD01	Remediatic	10/9/2012	590	8/25/1986	2/1/2013	LA13FG20(	WIPP/OPE	7.135208	22.35688	LA130014	########	WIPP	::
92164		90821	S832448	SB02006	90824	92165	788790	Nitrate	Yes	GovGoal	LA-MHD01	Remediatic	10/4/2012	595	4/13/1983	5/9/2013	LA13FG20	WIPP/OPE	4.604522	9.940501	LA130082	########	WIPP	::
92166		91004	S881562		91005	92168	788792	Nitrate	Yes	GovGoal	LA-MHD01	Remediatic	10/4/2012	595	7/25/1988	2/6/2013	LA13FG80(	WIPP/OPE	5.674683	29.3023	LA130031	########	WIPP	::
92169		90808	S822838	SB02005	90813	92170	788839	Nitrate	Yes	GovGoal	LA-MHD01	Remediatic	10/4/2012	595	3/9/1982	5/3/2013	LA13FG20(	WIPP/OPE	1.997102	9.63302	LA130087	7/1/2013	WIPP	::
92171		90818	S832448		90824	92172	788841	Nitrate	Yes	GovGoal	LA-MIN02-	Remediatic	10/4/2012	595	4/13/1983	1/15/2013	LA13FG80(	WIPP/OPE	1.135743	12.39746	LA130134	########	WIPP	::
92173		90807	S822838		90813	92174	788843	Nitrate	Yes	GovGoal	LA-MIN02-	Remediatic	10/4/2012	595	3/9/1982	1/15/2013	LA13FG80(	WIPP/OPE	1.780436	8.563756	LA130135	########	WIPP	::
92175		91008	S881563		91012	92176	788845	Nitrate	Yes	GovGoal	LA-MHD01	Remediatic	10/4/2012	595	6/1/1988	6/14/2013	LA13FG20(	WIPP/OPE	20.40731	130.617	LA130108	8/2/2013	WIPP	::
92150		90820	S832448	SB01997	90824	92151	788539	Nitrate	Yes	GovGoal	LA-MHD01	Remediatic	10/3/2012	596	4/13/1983	4/30/2013	LA13FG20	WIPP/OPE	6.8321	16.40909	LA130072	########	WIPP	::
92152		90966	S883130		90970	92153	788541	Nitrate	Yes	GovGoal	LA-MIN02-	Remediatic	10/3/2012	596	11/7/1988	3/22/2013	LA13FG20	WIPP/OPE	9.304694	102.7411	LA130133	########	WIPP	::
92154		90760	S825639		90761	92155	788543	Nitrate	Yes	GovGoal	LA-MHD01	Remediatic	10/3/2012	596	12/28/1982	2/1/2013	LA13FG20(	WIPP/OPE	4.679099	31.09357	LA130031	########	WIPP	::
92156		90822	S832448		90824	92157	788545	Nitrate	Yes	GovGoal	LA-MIN02-	Remediatic	10/3/2012	596	4/13/1983	1/15/2013	LA13FG80(	WIPP/OPE	4.517232	14.1458	LA130136	########	WIPP	::
92158		90755	S825639		90761	92159	788547	Nitrate	Yes	GovGoal	LA-MHD01	Remediatic	10/3/2012	596	12/28/1982	2/1/2013	LA13FG20(	WIPP/OPE	1.057911	4.253031	LA130014	########	WIPP	::
92160		90806	S822838	SB02006	90813	92161	788549	Nitrate	Yes	GovGoal	LA-MHD01	Remediatic	10/3/2012	596	3/9/1982	5/9/2013	LA13FG20	WIPP/OPE	1.345053	8.341942	LA130082	########	WIPP	::
92162		90759	S825639		90761	92163	788551	Nitrate	Yes	GovGoal	LA-MIN02-	Remediatic	10/3/2012	596	12/28/1982	9/9/2013	LA13FG20	WIPP/OPE	6.528612	30.33182	LA130161	########	WIPP	::
92129		90955	S863787	SB02023	90958	92130	789778	Nitrate	Yes	GovGoal	LA-MHD01	Remediatic	10/2/2012	597	8/25/1986	5/14/2013	LA13FG20	WIPP/OPE	0.699118	3.998351	LA130078	########	WIPP	::
92131		90811	S822838	SB02005	90813	92132	789780	Nitrate	Yes	GovGoal	LA-MHD01	Remediatic	10/2/2012	597	3/9/1982	5/9/2013	LA13FG20	WIPP/OPE	5.938741	15.10908	LA130087	7/1/2013	WIPP	::
92133		90859	S834539		90864	92135	789782	Nitrate	Yes	GovGoal	LA-MHD01	Remediatic	10/2/2012	597	11/8/1983	1/24/2013	LA13FG80(	WIPP/OPE	1.789211	9.386139	LA130034	########	WIPP	::
92134		90859	S834539		90864	92135	789783	Nitrate	Yes	GovGoal	LA-MIN02-	Remediatic	10/2/2012	597	11/8/1983	4/3/2013	LA13FG20	WIPP/OPE	6.616539	22.83597	LA130132	9/9/2013	WIPP	::
92136		90756	S825639		90761	92138	789785	Nitrate	Yes	GovGoal	LA-MIN02-	Remediatic	10/2/2012	597	12/28/1982	1/24/2013	LA13FG80(	WIPP/OPE	0.497994	5.618888	LA130133	########	WIPP	::
92139		90843	S832040	SB01943	90844	92141	789846	Nitrate	Yes	GovGoal	LA-MHD01	Remediatic	10/2/2012	597	1/25/1983	1/24/2013	LA13FG12(	WIPP/OPE	0.764513	4.289869	LA130032	########	WIPP	::
92140		90843	S832040		90844	92141	789847	Nitrate	Yes	GovGoal	LA-MIN02-	Remediatic	10/2/2012	597	1/25/1983	4/3/2013	LA13FG20	WIPP/OPE	3.263329	27.83339	LA130129	9/4/2013	WIPP	::
92142		90870	S832464	SB02005	90871	92143	789849	Nitrate	Yes	GovGoal	LA-MHD01	Remediatic	10/2/2012	597	12/29/1983	5/9/2013	LA13FG20	WIPP/OPE	2.780878	8.787545	LA130087	7/1/2013	WIPP	::
92144		90810	S822838	SB01978	90813	92146	789851	Nitrate	Yes	GovGoal	LA-MHD01	Remediatic	10/2/2012	597	3/9/1982	2/1/2013	LA13FG20(	WIPP/OPE	0.252909	0.755874	LA130062	6/5/2013	WIPP	::
92145		90810	S822838		90813	92146	789298	Nitrate	Yes	GovGoal	LA-MIN02-	Remediatic	10/2/2012	597	3/9/1982	4/3/2013	LA13FG20	WIPP/OPE	0.634023	7.049711	LA130132	9/9/2013	WIPP	::
92147		90875	S844213		90879	92149	789300	Nitrate	Yes	GovGoal	LA-MHD01	Remediatic	10/2/2012	597	5/9/1984	10/16/2012	LA12FG80(	WIPP/OPE	3.402353	22.03063	LA130014	########	WIPP	::
92148		90875	S844213	SB02087	90879	92149	789301	Nitrate	Yes	GovGoal	LA-MIN02-	Remediatic	10/2/2012	597	5/9/1984	4/17/2013	LA13FG20	WIPP/OPE	20.84239	168.3949	LA130168	########	WIPP	::
92121		90803	S822838	SB02012	90813	92123	788782	Nitrate	Yes	GovGoal	LA-MHD01	Remediatic	10/1/2012	598	3/9/1982	5/9/2013	LA13FG20	WIPP/OPE	0.034875	0.241154	LA130082	########	WIPP	::
92122		90803	S822838		90813	92123	788783	Nitrate	Yes	GovGoal	LA-MIN02-	Remediatic	10/1/2012	598	3/9/1982	4/3/2013	LA13FG20	WIPP/OPE	0.634023	7.049711	LA130135	########	WIPP	::
92124		90804	S822838	SB01997	90813	92125	788785	Nitrate	Yes	GovGoal	LA-MHD01	Remediatic	10/1/2012	598	3/9/1982	4/30/2013	LA13FG20	WIPP/OPE	1.755084	15.56235	LA130072	########	WIPP	::
92126		90802	S822838	SB02012	90813	92128	788787	Nitrate	Yes	GovGoal	LA-MHD01	Remediatic	10/1/2012	598	3/9/1982	5/9/2013	LA13FG20	WIPP/OPE	0.054207	0.402975	LA130082	########	WIPP	::
92127		90802	S822838		90813	92128	788788	Nitrate	Yes	GovGoal	LA-MIN02-	Remediatic	10/1/2012	598	3/9/1982	7/10/2013	LA13FG20	WIPP/OPE	3.441324	23.16438	LA130155	########	WIPP	::
90931			S863696		90935		786459	Nitrate	Yes	GovGoal	LA-MIN04-	Remediatic	2/15/2012	827	8/25/1986	3/1/2013	LA13FG80	WIPP/OPE	2.946739	15.30366	LA130055	########	WIPP	::
90883			S833261		90887		786484	Nitrate	Yes	GovGoal	LA-MIN04-	Remediatic	2/8/2012	834	5/16/1983	3/1/2013	LA13FG80	WIPP/OPE	5.852822	11.61325	LA130055	########	WIPP	::
90872			S844213		90879		786404	Nitrate	Yes	GovGoal	LA-MIN04-	Remediatic	2/7/2012	835	5/9/1984	5/15/2013	LA13FG20	WIPP/OPE	5.0112	18.16621	LA130174	########	WIPP	::
68567	1		S816837		68490		796585	Suspect	No	GovGoal	LA-MHD01	Remediatic	10/30/2013	204	11/3/1981	1/21/2014	LA14FG20(	LANL/54-G	1.310967	4.615732			LANL	::
69548		68998	S851416			69682	800248	Suspect	No	Non-GovG	LA-MIN02-	Remediatic	4/24/2014	28	2/11/1985			LANL/54-G	0.944936	2.36615			LANL	::
69553			S841627		69681		800385	Suspect	No	Non-GovG	LA-MIN02-	Remediatic	4/24/2014	28	10/31/1984			LANL/54-G	12.46703	61.67436			LANL	::
69616			S841627		69681		731006	Suspect	No	Non-GovG	LA-MIN02-	Remediatic	4/24/2014	28	10/31/1984			LANL/54-G	9.752867	62.14455			LANL	::
69634		68998	S851416			69682	731002	Suspect	No	Non-GovG	LA-MIN02-	Remediatic	4/24/2014	28	2/11/1985			LANL/54-G	10.96145	35.14876			LANL	::
69519			S816768		69614		799982	Suspect	No	Non-GovG	LA-MIN02-	Remediatic	4/22/2014	30	9/28/1981			LANL/54-G	17.19366	18.68914			LANL	::
69604			S816768		69614		800773	Suspect	No	Non-GovG	LA-MIN02-	Remediatic	4/22/2014	30	9/28/1981			LANL/54-G	11.56851	4.334664			LANL	::
69620			S816768		69614		731010	Suspect	No	Non-GovG	LA-MIN02-	Remediatic	4/22/2014	30	9/28/1981			LANL/54-G	20.41958	9.09245			LANL	::
69630			S843672		69581		731016	Suspect	No	Non-GovG	LA-MIN02-	Remediatic	4/22/2014	30	10/31/1984			LANL/54-G	20.4277	74.2003			LANL	::
69636			S843672		69581		731003	Suspect	No	Non-GovG	LA-MIN02-	Remediatic	4/22/2014	30	10/31/1984			LANL/54-G	15.07477	50.22471			LANL	::
69598		68993	S793450			69613	800802	Suspect	No	Non-GovG	LA-MIN02-	Remediatic	4/21/2014	31	11/15/1979			LANL/54-G	2.03933	0.289753			LANL	::
69638			S822679		69705		731009	Suspect	No	Non-GovG	LA-MIN02-	Remediatic	4/21/2014	31	2/15/1982			LANL/54-G	8.109312	5.886426			LANL	::
69644		68993	S793450			69613	800953	Suspect	No	Non-GovG	LA-MIN02-	Remediatic	4/21/2014	31	11/15/1979			LANL/54-G	9.318545	4.210555			LANL	::
69645			S822679		69705		800958	Suspect	No	Non-GovG	LA-MIN02-	Remediatic	4/21/2014	31	2/15/1982			LANL/54-G	16.09102	17.2424			LANL	::

PKG_ID	Related to	Intermedia	ParentID	Overpacke	Empty P	Empty Dau	C_ID	Salt Type	WasteLok	3706	Waste Stre	Type	RemedDate	Days Since	WasteGenDate	FGA_Date	HSG_BDR	Location	PECi	FGE	Shipment	Ship Date	Location C	Specific Lo
69015			S851418		69704		730958	Suspect	No	Non-GovG	LA-MIN02-	Remediatic	4/18/2014	34	2/11/1985			LANL/54-G	3.013236	9.272299			LANL	::
69520		68994	S813471			69622	799984	Suspect	No	Non-GovG	LA-MIN02-	Remediatic	4/18/2014	34	6/1/1981			LANL/54-G	5.089351	2.082103			LANL	::
69633			S851418		69704		731021	Suspect	No	Non-GovG	LA-MIN02-	Remediatic	4/18/2014	34	2/11/1985			LANL/54-G	20.17511	59.01234			LANL	::
69635			S851418		69704		800952	Suspect	No	Non-GovG	LA-MIN02-	Remediatic	4/18/2014	34	2/11/1985			LANL/54-G	4.376367	17.33831			LANL	::
69637		68994	S813471			69622	731007	Suspect	No	Non-GovG	LA-MIN02-	Remediatic	4/18/2014	34	6/1/1981			LANL/54-G	6.693346	5.179369			LANL	::
69641		68994	S813471			69622	800957	Suspect	No	Non-GovG	LA-MIN02-	Remediatic	4/18/2014	34	6/1/1981			LANL/54-G	9.111097	5.079884			LANL	::
69615		69903	S843673			69702	731005	Suspect	No	Non-GovG	LA-MIN02-	Remediatic	4/17/2014	35	10/31/1984	4/30/2014	LA14FG20(	LANL/54-G	13.30351	85.61466			LANL	::
69618		68997	S818412			69703	731011	Suspect	No	Non-GovG	LA-MIN02-	Remediatic	4/17/2014	35	12/28/1981	4/30/2014	LA14FG20(	LANL/54-G	4.133243	3.628956			LANL	::
69639		69903	S843673			69702	800943	Suspect	No	Non-GovG	LA-MIN02-	Remediatic	4/17/2014	35	10/31/1984	4/30/2014	LA14FG20(	LANL/54-G	4.419163	31.53679			LANL	::
69642		68997	S818412			69703	800948	Suspect	No	Non-GovG	LA-MIN02-	Remediatic	4/17/2014	35	12/28/1981	4/30/2014	LA14FG20(	LANL/54-G	4.910138	3.277549			LANL	::
69595		69090	S852588	SB50418	69202	69591	800751	Suspect	No	GovGoal	LA-MIN02-	Remediatic	3/18/2014	65	4/15/1985	4/2/2014	LA14FG20!	LANL/54-G	8.836188	57.2651			LANL	::
69904			S851415				793128	Suspect	No	Non-GovG	LA-MIN02-	Daughter		41781	2/11/1985			LANL/54-G	10.25945	114.7366			LANL	::
69907			S844602				793131	Suspect	No	Non-GovG	LA-MIN02-	Daughter		41781	7/25/1984			LANL/54-G	14.4075	149.1463			LANL	::
70069							798232	Suspect	No	Non-GovG	LA-MIN02-	Daughter		41781	3/25/1980			LANL/54-G	0.560098	5.409867			LANL	
94068			S851852		94070		789475	Suspect	No	GovGoal	LA-CIN01.(	Remediatic	7/25/2013	301	3/17/1985	2/25/2014	LA14FG12(	LANL/54-G	28.98498	173.1912			LANL	::
94227			S813475		94228		791297	Suspect	No	GovGoal	LA-MHD01	Remediatic	8/20/2013	275	6/1/1981	12/20/2013	LA13FG12!	LANL/54-G	1.296161	3.516108			LANL	::
S842446							748875	Suspect	No	Non-GovG	LA-CIN01.(	Original		41781	2/13/1984			LANL/54-G	4.903097	44.67688			LANL	::
68432			S803613	SB50037	68663		796629	Suspect	No	GovGoal	LA-MIN02-	Remediatic	11/12/2013	191	2/14/1980	12/18/2013	LA13FG21!	WCS/OPER	0.314962	2.27138	LW140011	4/9/2014	WCS	::
68543			S823016	SB50031	68523		797004	Suspect	No	GovGoal	LA-MIN02-	Remediatic	10/25/2013	209	4/4/1982	1/14/2014	LA14FG20(	WCS/OPER	8.391675	46.66386	LW140011	4/9/2014	WCS	::
68580			S804989	SB50025	68531		797040	Suspect	No	GovGoal	LA-MIN02-	Remediatic	10/29/2013	205	12/3/1980	1/10/2014	LA14FG20(	WCS/OPER	4.456894	11.34396	LW140013	########	WCS	::
68584			S833409	SB50019	68622		796597	Suspect	No	GovGoal	LA-MIN02-	Remediatic	11/7/2013	196	7/13/1983	12/18/2013	LA13FG21!	LANL/54-G	1.531422	16.165	LW140009	4/8/2014	WCS	::
68627			S803613	SB50059	68663		797416	Suspect	No	GovGoal	LA-MIN02-	Remediatic	11/12/2013	191	2/14/1980	11/25/2013	LA13FG21!	LANL/54-G	0.314899	2.270925	LW140027	########	WCS	::
68676			S811692	SB50005	69002		797720	Suspect	No	GovGoal	LA-MIN02-	Remediatic	11/20/2013	183	3/16/1981	12/20/2013	LA13FG12!	WCS/OPER	6.018674	4.229658	LW140012	4/9/2014	WCS	::
69565		69090	S852588	SB50414	69202	69591	800728	Suspect	No	GovGoal	LA-MIN02-	Remediatic	3/18/2014	65	4/15/1985	4/2/2014	LA14FG20!	WCS/OPER	24.46718	144.4145	LW140036	########	WCS	::
94201			S822542	SB50086	94202		790955	Suspect	No	GovGoal	LA-CIN01.(	Remediatic	8/15/2013	280	2/15/1982	1/24/2014	LA14FG12(	LANL/54-G	24.35341	124.3277	LW140028	########	WCS	::
94211			S832146	SB50108	94213		791284	Suspect	No	GovGoal	LA-CIN01.(	Remediatic	8/16/2013	279	11/8/1983	1/24/2014	LA14FG12(	LANL/54-G	17.24899	100.2138	LW140029	########	WCS	::
S802853				SB50044			748697	Suspect	No	GovGoal	LA-CIN01.(	Original		41781	5/19/1980	1/9/2014	LA14FG12(	WCS/OPER	28.28184	13.2828	LW140023	########	WCS	::
68547			S843593		68664		797033	Suspect	No	GovGoal	LA-MIN02-	Remediatic	11/12/2013	191	10/31/1984	11/25/2013	LA13FG21!	WIPP/OPE	1.517822	16.97457	LA140004	1/9/2014	WIPP	::
68551			S843593		68664		797017	Suspect	No	GovGoal	LA-MIN02-	Remediatic	11/12/2013	191	10/31/1984	11/25/2013	LA13FG21!	WIPP/OPE	1.517519	16.97117	LA140004	1/9/2014	WIPP	::
68633	1		S818449		68645		797246	Suspect	No	GovGoal	LA-MIN02-	Remediatic	11/11/2013	192	12/28/1981	11/25/2013	LA13FG21!	WIPP/OPE	1.185548	13.25858	LA130186	########	WIPP	::
68606			S833409		68622		797053	Suspect	No	GovGoal	LA-MIN02-	Remediatic	11/7/2013	196	7/13/1983	11/22/2013	LA13FG21!	WIPP/OPE	1.531422	16.165	LA140004	1/9/2014	WIPP	::
68637			S833409		68622		797242	Suspect	No	GovGoal	LA-MIN02-	Remediatic	11/7/2013	196	7/13/1983	11/21/2013	LA13FG21!	WIPP/OPE	3.062232	32.32353	LA130186	########	WIPP	::
68611			S823127		68597		797182	Suspect	No	GovGoal	LA-MIN02-	Remediatic	11/5/2013	198	5/17/1982	11/22/2013	LA13FG21!	WIPP/OPE	6.162043	5.16064	LA130186	########	WIPP	::
68613			S823127		68597		797184	Suspect	No	GovGoal	LA-MIN02-	Remediatic	11/5/2013	198	5/17/1982	11/22/2013	LA13FG21!	WIPP/OPE	2.987091	5.854245	LA130186	########	WIPP	::
68559	1		S813676		68592		740569	Suspect	No	GovGoal	LA-MIN02-	Remediatic	11/4/2013	199	7/6/1981	11/22/2013	LA13FG21!	WIPP/OPE	5.898596	4.483244	LA140003	1/7/2014	WIPP	::
68561			S818382		68533		740571	Suspect	No	GovGoal	LA-MIN02-	Remediatic	11/1/2013	202	11/30/1981	11/15/2013	LA13FG21!	WIPP/OPE	2.279969	2.632106	LA130186	########	WIPP	::
68568			S818382		68533		797058	Suspect	No	GovGoal	LA-MIN02-	Remediatic	11/1/2013	202	11/30/1981	11/15/2013	LA13FG21!	WIPP/OPE	10.17556	19.88898	LA130184	########	WIPP	::
68565	1		S816692		68516		796577	Suspect	No	GovGoal	LA-MIN02-	Remediatic	10/31/2013	203	9/8/1981	11/15/2013	LA13FG21!	WIPP/OPE	4.189091	4.195196	LA130186	########	WIPP	::
68557			S816890		68534		740567	Suspect	No	GovGoal	LA-MIN02-	Remediatic	10/30/2013	204	11/3/1981	11/15/2013	LA13FG21!	WIPP/OPE	6.067737	8.386785	LA140004	1/9/2014	WIPP	::
68569			S816890		68534		796587	Suspect	No	GovGoal	LA-MIN02-	Remediatic	10/30/2013	204	11/3/1981	11/15/2013	LA13FG21!	WIPP/OPE	2.89828	1.618996	LA130184	########	WIPP	::
68579	1		S846055		68514		797039	Suspect	No	GovGoal	LA-MIN02-	Remediatic	10/29/2013	205	12/18/1984	11/15/2013	LA13FG21!	WIPP/OPE	1.726641	19.30989	LA130185	########	WIPP	::
68566			S843594		68519		796578	Suspect	No	GovGoal	LA-MIN02-	Remediatic	10/28/2013	206	10/31/1984	11/15/2013	LA13FG21!	WIPP/OPE	9.624183	37.24486	LA130184	########	WIPP	::
68570			S843594		68519		796588	Suspect	No	GovGoal	LA-MIN02-	Remediatic	10/28/2013	206	10/31/1984	11/15/2013	LA13FG21!	WIPP/OPE	21.79934	56.16463	LA130184	########	WIPP	::
68497			S823016	SB02107	68523		796682	Suspect	No	GovGoal	LA-MIN02-	Remediatic	10/25/2013	209	4/4/1982	11/8/2013	LA13FG21!	WIPP/OPE	7.543264	49.20094	LA130181	########	WIPP	::
68470			S818255		68535		738586	Suspect	No	GovGoal	LA-MIN02-	Remediatic	10/23/2013	211	11/30/1981	11/8/2013	LA13FG21!	WIPP/OPE	7.85263	15.17924	LA130184	########	WIPP	::
68493			S818255		68535		796680	Suspect	No	GovGoal	LA-MIN02-	Remediatic	10/23/2013	211	11/30/1981	11/8/2013	LA13FG21!	WIPP/OPE	0.491469	5.420094	LA130180	########	WIPP	::
68544			S855677		68528		796975	Suspect	No	GovGoal	LA-MIN02-	Remediatic	10/23/2013	211	11/19/1985	11/8/2013	LA13FG21!	WIPP/OPE	4.521384	18.47907	LA130179	########	WIPP	::
68556			S855677		68528		797037	Suspect	No	GovGoal	LA-MIN02-	Remediatic	10/23/2013	211	11/19/1985	11/8/2013	LA13FG21!	WIPP/OPE	11.87656	81.81337	LA130179	########	WIPP	::
68302			S813562	SB02097	68306		729226	Suspect	No	GovGoal	LA-CIN01.(	Remediatic	9/4/2013	260	2/9/1981	10/3/2013	LA13FG12!	WIPP/OPE	0.623613	3.848408	LA130177	########	WIPP	::
68303			S813562	SB02096	68306		733198	Suspect	No	GovGoal	LA-CIN01.(	Remediatic	9/4/2013	260	2/9/1981	10/3/2013	LA13FG12!	WIPP/OPE	1.409227	2.531967	LA130176	########	WIPP	::
94223			S802959	SB02091	94224		791196	Suspect	No	GovGoal	LA-CIN01.(	Remediatic	8/20/2013	275	7/14/1980	9/26/2013	LA13FG12!	WIPP/OPE	4.095349	8.168579	LA130170	########	WIPP	::
94225			S815176		94226		791295	Suspect	No	GovGoal	LA-CIN01.(	Remediatic	8/20/2013	275	1/6/1981	9/9/2013	LA13FG12(	WIPP/OPE	1.664108	3.211053	LA130161	########	WIPP	::
94215			S853482	SB02090	94220		788346	Suspect	No	GovGoal	LA-CIN01.(	Remediatic	8/19/2013	276	7/9/1985	9/4/2013	LA13FG12(	WIPP/OPE	6.333284	25.91858	LA130168	########	WIPP	::
94216			S853482		94220		788347	Suspect	No	GovGoal	LA-CIN01.(	Remediatic	8/19/2013	276	7/9/1985	9/4/2013	LA13FG12(	WIPP/OPE	14.15605	92.2719	LA130173	########	WIPP	::
94217			S853482		94220		788348	Suspect	No	GovGoal	LA-CIN01.(	Remediatic	8/19/2013	276	7/9/1985	9/4/2013	LA13FG12(	WIPP/OPE	4.006252	16.88578	LA130163	########	WIPP	::
94208			S832146	SB02091	94213		791281	Suspect	No	GovGoal	LA-CIN01.(	Remediatic	8/16/2013	279	11/8/1983	9/9/2013	LA13FG12(	WIPP/OPE	7.591855	25.05717	LA130170	########	WIPP	::
94209			S832146		94213		791282	Suspect	No	GovGoal	LA-CIN01.(	Remediatic	8/16/2013	279	11/8/1983	9/4/2013	LA13FG12(	WIPP/OPE	1.639789	2.684638	LA130159	########	WIPP	::
94210			S832146		94213		791283	Suspect	No	GovGoal	LA-CIN01.(	Remediatic	8/16/2013	279	11/8/1983	9/4/2013	LA13FG12(	WIPP/OPE	3.033435	4.232845	LA130163	########	WIPP	::
94212			S832146		94213		791285	Suspect	No	GovGoal	LA-CIN01.(	Remediatic	8/16/2013	279	11/8/1983	9/4/2013	LA13FG12(	WIPP/OPE	0.401334	3.748128	LA130161	########	WIPP	::
94200			S822542		94202		790954	Suspect	No	GovGoal	LA-CIN01.(	Remediatic	8/15/2013	280	2/15/1982	9/4/2013	LA13FG12(	WIPP/OPE	1.614912	1.836213	LA130157	########	WIPP	::
94203			S822541	SB02092	94207		791277	Suspect	No	GovGoal	LA-CIN01.(	Remediatic	8/15/2013	280	2/15/1982	9/4/2013	LA13FG12(	WIPP/OPE	14.48723	20.36137	LA130167	########	WIPP	::
94205			S822541		94207		788344	Suspect	No	GovGoal	LA-CIN01.(	Remediatic	8/15/2013	280	2/15/1982	9/4/2013	LA13FG12(	WIPP/OPE	16.26124	10.85999	LA130163	########	WIPP	::
94206			S822541		94207		788345	Suspect	No	GovGoal	LA-CIN01.(	Remediatic	8/15/2013	280	2/15/1982	9/4/2013	LA13FG12(	WIPP/OPE	7.718257	6.640414	LA130163	########	WIPP	::

PKG_ID	Related to	Intermedia	ParentID	Overpacke	Empty P	Empty Dau	C_ID	Salt Type	WasteLok	3706	Waste Stre	Type	RemedDate	Days Since	WasteGenDate	FGA_Date	HSG_BDR	Location	PECi	FGE	Shipment	Ship Date	Location C	Specific Lo
94144			S813601	SB02086	94147		788452	Suspect	No	GovGoal	LA-CIN01.0	Remediatic	8/8/2013	287	6/1/1981	8/15/2013	LA13FG12(	WIPP/OPE	1.105975	0.319849	LA130165	########	WIPP	::
94145			S813601	SB02081	94147		788453	Suspect	No	GovGoal	LA-CIN01.0	Remediatic	8/8/2013	287	6/1/1981	8/21/2013	LA13FG12(	WIPP/OPE	0	0	LA130167	########	WIPP	::
94146			S813601		94147		788454	Suspect	No	GovGoal	LA-CIN01.0	Remediatic	8/8/2013	287	6/1/1981	8/16/2013	LA13FG12(	WIPP/OPE	6.91606	7.816695	LA130173	########	WIPP	::
94141			S816667		94143		791035	Suspect	No	GovGoal	LA-CIN01.0	Remediatic	8/7/2013	288	9/8/1981	8/21/2013	LA13FG12(	WIPP/OPE	7.143979	8.700264	LA130150	########	WIPP	::
94142			S816667		94143		791036	Suspect	No	GovGoal	LA-CIN01.0	Remediatic	8/7/2013	288	9/8/1981	8/15/2013	LA13FG12(	WIPP/OPE	8.663668	7.255765	LA130150	########	WIPP	::
94087			S818370		94089		788929	Suspect	No	GovGoal	LA-CIN01.0	Remediatic	7/30/2013	296	12/28/1981	8/5/2013	LA13FG12(	WIPP/OPE	6.092225	11.01419	LA130134	########	WIPP	::
94088			S818370		94089		788930	Suspect	No	GovGoal	LA-CIN01.0	Remediatic	7/30/2013	296	12/28/1981	8/5/2013	LA13FG12(	WIPP/OPE	1.876921	20.71271	LA130173	########	WIPP	::
94078			S835372		94080		788418	Suspect	No	GovGoal	LA-CIN01.0	Remediatic	7/26/2013	300	12/29/1983	8/5/2013	LA13FG12(	WIPP/OPE	3.621075	2.770011	LA130173	########	WIPP	::
94079			S835372		94080		788419	Suspect	No	GovGoal	LA-CIN01.0	Remediatic	7/26/2013	300	12/29/1983	8/5/2013	LA13FG12(	WIPP/OPE	23.49762	111.2697	LA130130	9/5/2013	WIPP	::
94069			S851852		94070		789476	Suspect	No	GovGoal	LA-CIN01.0	Remediatic	7/25/2013	301	3/17/1985	8/1/2013	LA13FG12(	WIPP/OPE	8.150019	70.5505	LA130130	9/5/2013	WIPP	::
94074			S824468		94077		791044	Suspect	No	GovGoal	LA-CIN01.0	Remediatic	7/25/2013	301	8/31/1982	8/7/2013	LA13FG12(	WIPP/OPE	14.9463	56.68083	LA130131	9/6/2013	WIPP	::
94075			S824468		94077		788390	Suspect	No	GovGoal	LA-CIN01.0	Remediatic	7/25/2013	301	8/31/1982	8/1/2013	LA13FG12(	WIPP/OPE	5.987809	25.5833	LA130132	9/9/2013	WIPP	::
94076			S824468		94077		788416	Suspect	No	GovGoal	LA-CIN01.0	Remediatic	7/25/2013	301	8/31/1982	9/26/2013	LA13FG12:	WIPP/OPE	12.41213	52.78588	LA130171	########	WIPP	::
94039			S823153		94042		791353	Suspect	No	GovGoal	LA-CIN01.0	Remediatic	7/23/2013	303	5/17/1982	7/30/2013	LA13FG12(	WIPP/OPE	4.78111	11.57234	LA130129	9/4/2013	WIPP	::
94040			S823153		94042		789468	Suspect	No	GovGoal	LA-CIN01.0	Remediatic	7/23/2013	303	5/17/1982	7/30/2013	LA13FG12(	WIPP/OPE	20.50289	67.54587	LA130130	9/5/2013	WIPP	::
94050			S811734		94052		788389	Suspect	No	GovGoal	LA-CIN01.0	Remediatic	7/23/2013	303	3/15/1981	7/31/2013	LA13FG12(	WIPP/OPE	0.293358	3.280765	LA130131	9/6/2013	WIPP	::
94051			S811734		94052		791010	Suspect	No	GovGoal	LA-CIN01.0	Remediatic	7/23/2013	303	3/15/1981	7/31/2013	LA13FG12(	WIPP/OPE	0.293358	3.280765	LA130133	########	WIPP	::
94032			S816469		94035		789463	Suspect	No	GovGoal	LA-CIN01.0	Remediatic	7/22/2013	304	9/9/1981	7/30/2013	LA13FG12(	WIPP/OPE	6.901552	13.10432	LA130128	9/3/2013	WIPP	::
94033			S816469		94035		789464	Suspect	No	GovGoal	LA-CIN01.0	Remediatic	7/22/2013	304	9/9/1981	7/30/2013	LA13FG12(	WIPP/OPE	4.823143	9.179661	LA130129	9/4/2013	WIPP	::
94034			S816469		94035		789465	Suspect	No	GovGoal	LA-CIN01.0	Remediatic	7/22/2013	304	9/9/1981	9/26/2013	LA13FG12:	WIPP/OPE	3.584954	4.288962	LA130171	########	WIPP	::
94036			S816664		94038		789467	Suspect	No	GovGoal	LA-CIN01.0	Remediatic	7/22/2013	304	9/8/1981	7/30/2013	LA13FG12(	WIPP/OPE	1.175661	2.432234	LA130131	9/6/2013	WIPP	::
94037			S816664		94038		791351	Suspect	No	GovGoal	LA-CIN01.0	Remediatic	7/22/2013	304	9/8/1981	7/30/2013	LA13FG12(	WIPP/OPE	5.739513	13.98724	LA130132	9/9/2013	WIPP	::
94011			S816342		94015		789212	Suspect	No	GovGoal	LA-CIN01.0	Remediatic	7/12/2013	314	8/4/1981	7/30/2013	LA13FG12(	WIPP/OPE	3.862296	4.504191	LA130132	9/9/2013	WIPP	::
94012			S816342		94015		789213	Suspect	No	GovGoal	LA-CIN01.0	Remediatic	7/12/2013	314	8/4/1981	7/31/2013	LA13FG12(	WIPP/OPE	5.359058	2.295166	LA130132	9/9/2013	WIPP	::
94013			S816342		94015		789214	Suspect	No	GovGoal	LA-CIN01.0	Remediatic	7/12/2013	314	8/4/1981	7/19/2013	LA13FG12(	WIPP/OPE	1.192838	12.44365	LA130131	9/6/2013	WIPP	::
94014			S816342		94015		789215	Suspect	No	GovGoal	LA-CIN01.0	Remediatic	7/12/2013	314	8/4/1981	7/18/2013	LA13FG12(	WIPP/OPE	3.301814	34.00901	LA130119	########	WIPP	::
94016		94010	S816342		94015	94017	789217	Suspect	No	GovGoal	LA-CIN01.0	Remediatic	7/12/2013	314	8/4/1981	7/18/2013	LA13FG12(	WIPP/OPE	2.646379	3.737102	LA130119	########	WIPP	::
94003			S816394		94004		788377	Suspect	No	GovGoal	LA-CIN01.0	Remediatic	7/11/2013	315	8/4/1981	7/18/2013	LA13FG12(	WIPP/OPE	1.109311	9.4764	LA130116	########	WIPP	::
94005			S816305		94006		788379	Suspect	No	GovGoal	LA-CIN01.0	Remediatic	7/11/2013	315	7/6/1981	7/18/2013	LA13FG12(	WIPP/OPE	3.945855	11.45483	LA130119	########	WIPP	::
94007			S816304		94009		788381	Suspect	No	GovGoal	LA-CIN01.0	Remediatic	7/11/2013	315	7/6/1981	7/18/2013	LA13FG12(	WIPP/OPE	1.203492	13.28382	LA130119	########	WIPP	::
94008			S816304		94009		788382	Suspect	No	GovGoal	LA-CIN01.0	Remediatic	7/11/2013	315	7/6/1981	7/19/2013	LA13FG12(	WIPP/OPE	0.934367	10.4495	LA130119	########	WIPP	::
93976			S811834		93977		789421	Suspect	No	GovGoal	LA-CIN01.0	Remediatic	7/9/2013	317	5/4/1981	7/16/2013	LA13FG12(	WIPP/OPE	5.880224	16.36545	LA130117	########	WIPP	::
93980			S811812		93982		788373	Suspect	No	GovGoal	LA-CIN01.0	Remediatic	7/9/2013	317	2/9/1981	7/16/2013	LA13FG12(	WIPP/OPE	0.679748	4.282753	LA130125	########	WIPP	::
93981			S811812		93982		788374	Suspect	No	GovGoal	LA-CIN01.0	Remediatic	7/9/2013	317	2/9/1981	7/18/2013	LA13FG12(	WIPP/OPE	7.39755	34.00004	LA130117	########	WIPP	::
93962			S814859		93966		791068	Suspect	No	GovGoal	LA-CIN01.0	Remediatic	7/4/2013	322	1/6/1981	7/18/2013	LA13FG12(	WIPP/OPE	1.375482	5.071239	LA130119	########	WIPP	::
93965			S814859		93966		791069	Suspect	No	GovGoal	LA-CIN01.0	Remediatic	7/4/2013	322	1/6/1981	7/16/2013	LA13FG12(	WIPP/OPE	3.308416	3.796827	LA130117	########	WIPP	::
93945			S813223		93948		789038	Suspect	No	GovGoal	LA-CIN01.0	Remediatic	7/2/2013	324	11/2/1981	7/12/2013	LA13FG12(	WIPP/OPE	1.414288	0.86011	LA130129	9/4/2013	WIPP	::
93946			S813223		93948		789110	Suspect	No	GovGoal	LA-CIN01.0	Remediatic	7/2/2013	324	11/2/1981	7/12/2013	LA13FG12(	WIPP/OPE	2.965706	3.428674	LA130128	9/3/2013	WIPP	::
93947			S813223		93948		789131	Suspect	No	GovGoal	LA-CIN01.0	Remediatic	7/2/2013	324	11/2/1981	7/12/2013	LA13FG12(	WIPP/OPE	2.355994	7.257798	LA130128	9/3/2013	WIPP	::
93949			S811613		93950		788724	Suspect	No	GovGoal	LA-CIN01.0	Remediatic	7/2/2013	324	2/9/1981	7/12/2013	LA13FG12(	WIPP/OPE	1.753719	6.106131	LA130116	########	WIPP	::
93902			S816374		93905		788720	Suspect	No	GovGoal	LA-CIN01.0	Remediatic	6/27/2013	329	8/4/1981	7/12/2013	LA13FG12(	WIPP/OPE	3.030472	2.329251	LA130130	9/5/2013	WIPP	::
93903			S816374		93905		788721	Suspect	No	GovGoal	LA-CIN01.0	Remediatic	6/27/2013	329	8/4/1981	7/11/2013	LA13FG12(	WIPP/OPE	7.471039	4.197971	LA130118	########	WIPP	::
93904			S816374		93905		788722	Suspect	No	GovGoal	LA-CIN01.0	Remediatic	6/27/2013	329	8/4/1981	7/11/2013	LA13FG12(	WIPP/OPE	14.12083	1.969793	LA130116	########	WIPP	::
93906			S816900		93908		788305	Suspect	No	GovGoal	LA-CIN01.0	Remediatic	6/27/2013	329	11/2/1981	7/12/2013	LA13FG12(	WIPP/OPE	4.702098	4.654256	LA130136	########	WIPP	::
93907			S816900		93908		788306	Suspect	No	GovGoal	LA-CIN01.0	Remediatic	6/27/2013	329	11/2/1981	7/11/2013	LA13FG12(	WIPP/OPE	6.083287	4.467519	LA130117	########	WIPP	::
93909			S816440		93910		788308	Suspect	No	GovGoal	LA-CIN01.0	Remediatic	6/27/2013	329	8/3/1981	7/12/2013	LA13FG12(	WIPP/OPE	3.288248	10.62648	LA130113	8/9/2013	WIPP	::
93900			S816915		93901		788690	Suspect	No	GovGoal	LA-CIN01.0	Remediatic	6/26/2013	330	11/2/1981	7/12/2013	LA13FG12(	WIPP/OPE	3.051869	5.77387	LA130111	8/7/2013	WIPP	::
93883			S818354		93887		789346	Suspect	No	GovGoal	LA-CIN01.0	Remediatic	6/24/2013	332	11/30/1981	7/3/2013	LA13FG12(	WIPP/OPE	11.15299	26.09635	LA130130	9/5/2013	WIPP	::
93884			S818354		93887		789347	Suspect	No	GovGoal	LA-CIN01.0	Remediatic	6/24/2013	332	11/30/1981	7/3/2013	LA13FG12(	WIPP/OPE	7.032567	7.493839	LA130110	8/6/2013	WIPP	::
93885			S818354		93887		789348	Suspect	No	GovGoal	LA-CIN01.0	Remediatic	6/24/2013	332	11/30/1981	7/3/2013	LA13FG12(	WIPP/OPE	10.27464	12.71851	LA130132	9/9/2013	WIPP	::
93886			S818354		93887		789349	Suspect	No	GovGoal	LA-CIN01.0	Remediatic	6/24/2013	332	11/30/1981	7/12/2013	LA13FG12(	WIPP/OPE	8.21625	16.54003	LA130129	9/4/2013	WIPP	::
93869			S816773		93870		790968	Suspect	No	GovGoal	LA-CIN01.0	Remediatic	6/22/2013	334	9/28/1981	7/11/2013	LA13FG12(	WIPP/OPE	4.139549	12.97758	LA130112	8/8/2013	WIPP	::
93859			S802641		93862		790999	Suspect	No	GovGoal	LA-CIN01.0	Remediatic	6/21/2013	335	2/14/1980	7/2/2013	LA13FG12(	WIPP/OPE	1.200625	0.458244	LA130125	########	WIPP	::
93860			S802641		93862		791000	Suspect	No	GovGoal	LA-CIN01.0	Remediatic	6/21/2013	335	2/14/1980	7/3/2013	LA13FG12(	WIPP/OPE	10.26502	4.120781	LA130117	########	WIPP	::
93861			S802641		93862		791001	Suspect	No	GovGoal	LA-CIN01.0	Remediatic	6/21/2013	335	2/14/1980	7/2/2013	LA13FG12(	WIPP/OPE	10.87534	15.66772	LA130110	8/6/2013	WIPP	::
93866			S816828		93868		791006	Suspect	No	GovGoal	LA-CIN01.0	Remediatic	6/21/2013	335	11/3/1981	7/2/2013	LA13FG12(	WIPP/OPE	1.067674	1.335822	LA130111	8/7/2013	WIPP	::
93867			S816828		93868		791007	Suspect	No	GovGoal	LA-CIN01.0	Remediatic	6/21/2013	335	11/3/1981	7/3/2013	LA13FG12(	WIPP/OPE	2.685774	4.301744	LA130113	8/9/2013	WIPP	::
93841			S813620		93845		791108	Suspect	No	GovGoal	LA-CIN01.0	Remediatic	6/18/2013	338	7/7/1981	7/2/2013	LA13FG12(	WIPP/OPE	0.807792	0.921423	LA130116	########	WIPP	::
93842			S813620		93845		791109	Suspect	No	GovGoal	LA-CIN01.0	Remediatic	6/18/2013	338	7/7/1981	6/28/2013	LA13FG12(	WIPP/OPE	1.767819	1.073985	LA130110	8/6/2013	WIPP	::
93843			S813620		93845		791110	Suspect	No	GovGoal	LA-CIN01.0	Remediatic	6/18/2013	338	7/7/1981	6/28/2013	LA13FG12(	WIPP/OPE	4.382926	4.325738	LA130110	8/6/2013	WIPP	::
93844			S813620		93845		791111	Suspect	No	GovGoal	LA-CIN01.0	Remediatic	6/18/2013	338	7/7/1981	6/28/2013	LA13FG12(	WIPP/OPE	1.898408	1.431925	LA130110	8/6/2013	WIPP	::
93846			S811872		93849		791113	Suspect	No	GovGoal	LA-CIN01.0	Remediatic	6/18/2013	338	4/5/1981	6/28/2013	LA13FG12(	WIPP/OPE	0.352039	0.614888	LA130134	########	WIPP	::
93847			S811872		93849		791144	Suspect	No	GovGoal	LA-CIN01.0	Remediatic	6/18/2013	338	4/5/1981	7/2/2013	LA13FG12(	WIPP/OPE	1.226503	1.441218	LA130131	9/6/2013	WIPP	::

PKG_ID	Related to	Intermedia	ParentID	Overpacke	Empty P	Empty Dau	C_ID	Salt Type	WasteLok	3706	Waste Stre	Type	RemedDate	Days Since	WasteGenDate	FGA_Date	HSG_BDR	Location	PECi	FGE	Shipment	Ship Date	Location C	Specific Lo
93848			S811872		93849		791145	Suspect	No	GovGoal	LA-CIN01.0	Remediatic	6/18/2013	338	4/5/1981	6/28/2013	LA13FG12(	WIPP/OPE	3.126965	2.135824	LA130117	########	WIPP	::
92616			S852952	SB01971	92619		789129	Suspect	No	GovGoal	LA-MHD01	Remediatic	1/17/2013	490	5/13/1985	3/22/2013	LA13FG20	WIPP/OPE	15.81009	163.3056	LA130085	########	WIPP	::
92618			S852952		92619		791495	Suspect	No	GovGoal	LA-MHD01	Remediatic	1/17/2013	490	5/13/1985	4/25/2013	LA13FG20	WIPP/OPE	5.922657	9.54157	LA130094	########	WIPP	::
S794448				SB01804			747864	Suspect	No	GovGoal	LA-CIN01.0	Original		41781	12/18/1979	8/29/2012	LA12FG12(	WIPP/OPE	11.01606	1.930472	LA120172	########	WIPP	::
S816357				SB01920			749220	Suspect	No	GovGoal	LA-CIN01.0	Original		41781	8/4/1981	12/13/2012	LA12FG12(	WIPP/OPE	36.44898	22.36416	LA130012	########	WIPP	::
S823125							770583	Suspect	No	GovGoal	LA-CIN01.0	Original		41781	5/17/1982	8/9/2012	LA12FG12(	WIPP/OPE	1.351052	15.10949	LA120139	########	WIPP	::
S823126				SB01798			762762	Suspect	No	GovGoal	LA-CIN01.0	Original		41781	5/17/1982	8/23/2012	LA12FG12(	WIPP/OPE	13.79763	20.77846	LA120167	########	WIPP	::
S835376				SB02002			759432	Suspect	No	GovGoal	LA-CIN01.0	Original		41781	12/29/1983	4/24/2013	LA13FG12(	WIPP/OPE	10.6081	31.59345	LA130072	########	WIPP	::
68510	1		S846055		68514		738870	Suspect	No	GovGoal	LA-MIN02-	Remediatic	10/29/2013	205	12/18/1984	12/5/2013	LA13FG21	WIPP/OPE	1.726641	19.30989	LA140014	########	WIPP 7	10:6:M
68541	1		S813676		68592		796974	Suspect	No	GovGoal	LA-MIN02-	Remediatic	11/4/2013	199	7/6/1981	11/21/2013	LA13FG21	WIPP/OPE	13.67945	12.96488	LA140011	########	WIPP 7	5:1:T
68571	1		S846055		68514		796593	Suspect	No	GovGoal	LA-MIN02-	Remediatic	10/29/2013	205	12/18/1984	11/27/2013	LA13FG21	WIPP/OPE	1.726641	19.30989	LA140010	########	WIPP 7	3:3:T
68578	1		S816837		68490		797038	Suspect	No	GovGoal	LA-MIN02-	Remediatic	10/30/2013	204	11/3/1981	11/15/2013	LA13FG21	WIPP/OPE	2.838971	5.65938	LA140014	########	WIPP 7	10:4:T
68581	1		S816692		68516		797055	Suspect	No	GovGoal	LA-MIN02-	Remediatic	10/31/2013	203	9/8/1981	11/21/2013	LA13FG21	WIPP/OPE	6.414197	13.36893	LA140011	########	WIPP 7	13:3:M
68630	1		S818449		68645		797250	Suspect	No	GovGoal	LA-MIN02-	Remediatic	11/11/2013	192	12/28/1981	11/27/2013	LA13FG21	WIPP/OPE	1.185311	13.25593	LA140017	########	WIPP 7	16:4:T

Attachment G

LA-CIN01.001 Waste Stream Delineation

From: Trey Greenwood [mailto:4dc.consulting@gmail.com]
Sent: Tuesday, September 30, 2014 12:37 PM
To: Christensen, Davis V
Subject: LA-CIN01.001

Davis,

The attached is the CIN01 write-up that we put together to justify not adding the code to CIN01 containers. Let me know if you want the source documents referenced in the paper. We also reviewed the "re-review" of the RTR tapes and all but 16 of the containers were identified as containing cemented matrix in some form. There were 16 that RTR could not defiantly say if the matrix was cemented or absorbed. Of those, 14 were sister containers to containers in which cemented matrix was identified. The other two (93976 and 94003) did not have sisters to compare. We are in the process of pulling the original paperwork on these two but that is time consuming and may take a couple of days.

I am not sure who at LANL has even seen this but I just tweaked it a little from the previous version.

Trey Greenwood
Technical Specialists
575.302.6000
"In God We Trust"
Technical Specialists Disclaimer

LA-CIN01.001 Waste Stream Delineation

The following discussion describes the Los Alamos National Laboratory (LANL) waste identification and categorization conventions associated with Central Characterization Program (CCP) cemented waste stream LA-CIN01.001. The discussion also compares waste stream LA-CIN01.001 containers to ensure they are appropriately identified as cemented waste.

Waste Stream LA-CIN01.001

CCP cemented transuranic (TRU) waste stream LA-CIN01.001 was approved in acceptable knowledge (AK) summary report CCP-AK-LANL-006, Rev. 6 on March 27, 2007. This AK report includes the following cemented TRU waste identification and categorization conventions used as part of waste management operations at LANL.

The initial cemented waste container population was provided by TA-55 from their Waste Management System (WMS) database (see attached LA-CIN01.001 With Kapil's data spreadsheet and supporting emails). CCP was in close contact with both Kapil Goyal, TA-55 Waste Manager Coordinator and Gerry Veazey, TA-55 Cement Fixation Subject Matter Expert (SME) during the creation of waste stream LA-CIN01.001. The initial container population included 2,470 containers. This population was evaluated (Reference C138) and the container paperwork was collected and submitted to Records (References M236 and M238).

During the initial evaluation of the 2,470 containers provided by LANL, the following conventions were identified.

Radioactive Solid Waste Disposal (RSWD) codes

RSWD Codes were first used at LANL in January 1971 and were discontinued in 1992. The RSWD Codes are a two-digit code preceded by the letter "A". The RSWD Codes were used at LANL to categorize TRU waste forms generated by the various on-site facilities. The RSWD Codes associated with cemented waste are A25 (Leached Process Residues) and A26 (Evaporator Bottoms/Salts) (References C138, D041, M222, and M238). This information was also provided by Kapil Goyal from the WMS database (see attached LA-CIN01.001 With Kapil's data spreadsheet).

Item Description Codes (IDCs)

IDCs were first used at LANL in July 1984 and discontinued in 1992. The IDCs generally consist of a three-digit number representing the most general descriptions of TRU waste. The IDC associated with cemented waste was 006, cemented process residues (process-leached solids, filter cakes, evaporator bottoms, etc., stabilized in Portland cement) (References C138, D041, M222, M236, and M238). This information was also provided by Kapil Goyal from the WMS database (see attached LA-CIN01.001 With Kapil's data (Steve) spreadsheet).

TRUPACT-II Content Code (TRUCON) Codes

TRUCON codes were first used at LANL in October 1992, and are presently in use. The TRUCON codes are intended to assist DOE in establishing the characteristics of TRU waste to be certified for transportation to the Waste Isolation Pilot Plant (WIPP). LANL TRUCON codes consist of a three-digit

number preceded by the letters “LA” and followed by a single character suffix that further defines the waste type, source, and/or packaging configuration. The TRUCON codes associated with waste cemented waste are LA114 and LA126 (References C138, M236, M238, D013, and D041). This information was also provided by Kapil Goyal from the WMS database (see attached LA-CIN01.001 With Kapil’s data spreadsheet).

Historical LANL Waste Stream Numbers

LANL’s historical Acceptable Knowledge Information Summary (AKIS) report documented the delineation and identification of LANL waste streams for shipment to WIPP (References D013 and D041). The last version of the AKIS identified cement waste streams MIN01-CIN (Mixed Inorganic Homogeneous Waste, Cemented Inorganics) and MIN05-COR (Mixed Inorganic Homogeneous Waste, Cemented Organics) (Reference D041). These waste streams contained cemented waste from various facilities at LANL including TA-55.

During the initial evaluation (and all evaluations since), the container list provided by Kapil Goyal from the WMS database was compared to the CONCERT database (References C138 and M222). CONCERT is an historical LANL container database that includes, but is not limited to, RSWD codes, historical LANL waste stream numbers, TRUCON codes, and waste stream descriptions for individual containers. Based on the comparison with CONCERT, all of the original 2,470 containers provided by LANL were identified as cemented waste (References C138 and M222). An excerpt of the type of information found in the CONCERT database has been included for container S811872 (see attached M222 - Excerpt_Container S811872 spreadsheet).

Container Paperwork and Packaging

The primary waste cemented at TA-55 comes from the Evaporator process and it includes evaporator bottoms or salts (i.e., nitrate salts) (References C140, D008, D036, M222, M236, M238, P152, P153, and U005). It is expected that the container paperwork typically identifies the waste that was cemented (Reference Pages from M236_DWLS for 52618 and 55341 PDF). Therefore, most of the container paperwork associated with cemented waste stream LA-CIN01.001 identifies evaporator bottoms or nitrate salts (References M236, P152, and P153).

The initial AK indicated that a cemented container generated prior to the late 1980’s would always include five layers of seven one-gallon lead shielded cans totaling 35 cans per drum (References C140 and P152). However, a subsequent review of the TA-55 Cement Fixation Drum Logbook determined a drum could contain any number of cans up to 40. In June 2012, it was discovered that any size can may have been used and multiple waste packaging methods were used during the cementation process (e.g., shielded cans, unshielded cans, shielded drums, unshielded drums, multiple liners bags). During the 1980’s, “strict compliance with waste packaging procedures was not always the general practice” (Reference C226). It is also known during the early 1980’s, waste was hand kneaded with cement in plastic bags (Reference U005). Based on the fact that multiple packaging methods have been identified that were not proceduralized, packaging configurations cannot be used to delineate waste stream LA-CIN01.001.

List of 88 LA-CIN01.001 Containers

The attached list of 88 containers were evaluated and compared to the LANL TRU waste identification and categorization conventions described above (see attached LA-CIN01.001 containers WIPP_WCS - 09-23-14 spreadsheet). Due to the age of the waste, RSWD codes were the primary identifier. All of the 88 containers were included in the initial cemented waste container population from the TA-55 WMS database (see attached LA-CIN01.001 With Kapil's data spreadsheet). The evaluation determined that the 88 containers were correctly identified as cemented waste. They include both RSWD codes A25 or A26 and the LANL TRU Program assigned waste stream MIN01-CIN (References C138, D041, M222, and M238). As explained above, packaging configurations and weight cannot be used to discount whether a drum contains cemented waste. Based on AK, the 88 containers should continue to be managed as cemented waste assigned to waste stream LA-CIN01.001; unless characterization activities indicate that the waste is not cemented (or consistent with cemented waste) or LANL provides further justification that the documented waste identification and categorization conventions are incorrect.

Waste Characterization, Reduction, and Repackaging (WCRRF) Facility Repackaging

A number of these containers were repacked at the WCRRF facility and the paperwork from repack designates them as nitrate salts instead of cemented waste. If the WCRRF operators had access to the original container paperwork, then they might have simply identified what was listed (i.e., nitrate salts). As explained above, the container paperwork for waste stream LA-CIN01.001 typically identifies the waste that was cemented. Since most of these containers were generated during the early 1980s, it is possible that the waste cemented during this timeframe would not be uniform in appearance (i.e., cement blocks/hunks). Waste was hand kneaded in plastic bags which may have resulted in incomplete solidification. Based on the age of the waste, the potential for radiolysis, and the process of solidification, a portion of the waste may contain or appear to be cement powder.

Mike Papp

From: Steve Schafer <steve.schafer@comcast.net>
Sent: Friday, September 19, 2014 9:58 AM
To: 'Mike Papp'
Subject: FW: Request for Help with Cemented Waste
Attachments: S844206.pdf; S790010.pdf; S823149.pdf; S870361.pdf; S910179.pdf; Interview with Gerry Veazey AK6-C140 Schafer.pdf

Steve Schafer
(303) 989-3292 - Office
(303) 250-6540 - Cell
steve.schafer@comcast.net

From: Steve Schafer [mailto:steve.schafer@comcast.net]
Sent: Friday, September 19, 2014 9:33 AM
To: 'Trey Greenwood'
Cc: 'Mike Papp'; 'Fitzgerald, Randy - LANL'
Subject: FW: Request for Help with Cemented Waste

Trey,

The email below is attempting to identify organics, but it unequivocally demonstrates we were in close communications with the LANL cementation SME to identify the cemented population.

As you recall, Gerry Veazey wrote the document "*Twenty-Five Years of Radioactive Waste Cementation at Los Alamos National Laboratory*" (U005) and his interview (C140) was integral to our AK.

Steve Schafer
(303) 989-3292 - Office
(303) 250-6540 - Cell
steve.schafer@comcast.net

From: Steve Schafer [mailto:steve.schafer@comcast.net]
Sent: Tuesday, April 10, 2007 10:51 AM
To: 'steve.schafer@comcast.net'; 'Gerry Veazey'
Cc: 'Mike Papp'; 'Jim Schoen'; 'Fitzgerald, Randy - LANL'
Subject: RE: Request for Help with Cemented Waste

Gerry,

As we discussed, attached are some examples of the paperwork we have on the earlier drums. Mostly one page per drum.

Steve Schafer
Office Phone (303) 989-3292
Mobile Phone (303) 250-6540

From: Steve Schafer [mailto:steve.schafer@comcast.net]
Sent: Wednesday, April 04, 2007 4:16 PM
To: 'Gerry Veazey'
Cc: 'Mike Papp'; 'Jim Schoen'; 'Fitzgerald, Randy - LANL'
Subject: Request for Help with Cemented Waste

Gerry,

We need some more help with the TA-55 cemented waste stream, if possible.

The question is how to identify drums containing cemented organics, and is it possible to determine the specific organic material cemented?

Containers in this waste stream generated prior to about 1988 are not assigned a TRUCON code but are assigned one of two RSWD Codes:

A-25 Leached Process Residues
A-26 Evaporator Bottoms/Salts

Is there anyway to identify whether drums assigned A-25 or A-26 are actually cemented organics? It seems clear from the various documents that cementation of organic liquids did occur prior to 1988, but these are the only two RSWD codes assigned to drums. Also, I don't think there is a RSWD Code for cemented or solidified organics.

Containers in this waste stream generated after about 1988 are assigned one of two TRUCON Codes:

LA114/214, TRU Solidified Inorganic Process Solids … trace (<1% weight) organics
LA126/226, Solidified Organic Process Solids …organics one to ten percent by weight

Clearly the LA126/226 drums are cemented organics, but note that LA126/226 is limited to Waste Material Type III.1 (see attached TRUCON Pages for LA126/226, Chemical Compatibility). How do we know these drums do not contain Waste Material Type IV organics greater than 1% (See attached pages from the TRAMPAC)?

I'll try to contact you tomorrow to explain this and discuss. Any help will be greatly appreciated, as always.

Steve Schafer
Office Phone (303) 989-3292
Mobile Phone (303) 250-6540

Outlook blocked access to the following potentially unsafe attachments: CementShippedThru16May08.xls, CementShippedThru16May08Q5.xls, CementShippedThru16May08Q6.xls.

From: Kapil K. Goyal, 505-667-7554 <kkg@lanl.gov>
To: randy_fitz@lanl.gov; estill@lanl.gov
Cc: andym@lanl.gov; rdodge@lanl.gov; gveazey@lanl.gov; r.huckton@lanl.gov; Chester A. Smith Jr.
Subject: Cement drums shipped to TA-54 through 5-16-08.
Sent: Fri 5/16/2008 4:30 PM

Randy and Wes,

I am attaching two spreadsheets of cemented drums shipped to TA-54 through 5-16-2008 based on data which was retrieved from our database Waste Management System (WMS). We have not yet been able to run a query which identifies the respective EPA HWNs. When we have that data, it will be forwarded.

Chester Smith and Gerry Veazey will help determine the EPA HWNs for the drums per spreadsheet CementShippedThru16May08.xls

Please update any prior data associated with these drums based on the attached spreadsheets.

Drum closed date is the date of last physical opening of the drums. For clarification. If the drums would have been opened thereafter the date would have been updated to reflect the latest physical opening.

Kapil 667-7554

Generatiion Location	TRUCON	RSWD Code	IDC	Container Type	Net Wt (lbs)	Am-241 g	Pu-238 g	Pu-239 g	Pu-242 g	U-233 g	U-234 g	U-238 g	Sr-90 g	Cs-137-g	Am-243 g	Cl-36 g	Co-60 g	H-3 g	Na-22 g	Pu-236 g	Pu-241 g	Ra-226 g	Th-228 g	U-232 g	U-235 g
TA-55 Pu Facility	LA114B			55 GAL	280	5.658	0.002853	26.78	0.00571												0.05703				
TA-55 Pu Facility	LA114B			55 GAL	346	14.41	0.1261	59.6	15.37			8.808									0.4443				26.42
TA-55 Pu Facility	LA114B			55 GAL	353	4.626	0.2249	24.74	28.52												0.642				
TA-55 Pu Facility	LA114B			55 GAL	356	5.805	0.003016	28.29	0.006032												0.06032				
TA-55 Pu Facility	LA114A			55 GAL	368	5.07	0.002206	20.69003	0.004417												0.044157				
TA-55 Pu Facility	LA114B			55 GAL	375	5.225	0.2719	12.52	22.32												0.8563				
TA-55 Pu Facility	LA114B			55 GAL	385	8.409	0.004443	41.66	0.008885												0.08885				
TA-55 Pu Facility	LA114A			85 GAL	391	12.81	0.004593	43.06981	0.009195												0.09192				
TA-55 Pu Facility	LA114B			55 GAL	417	2.438	0.005934	55.65	0.01187												0.1187				
TA-55 Pu Facility	LA114A			85 GAL	435	7.39	0.003941	36.95856	0.00789												0.078878				
TA-55 Pu Facility	LA114A			85 GAL	438		0.01051	98.56867	0.021043												0.210367				
TA-55 Pu Facility	LA114A			55 GAL	439	4.72	0.004056	38.03812	0.008121												0.081182				
TA-55 Pu Facility	LA114B			55 GAL	443.2	2.087	0.008169	76.60419	0.016337												0.16337				
TA-55 Pu Facility	LA114A			85 GAL	445	7.81	0.003654	34.26435	0.007315												0.073128				
TA-55 Pu Facility	LA114A			55 GAL	450	4.2	0.008379	28.35511	0.036007												0.149757				
TA-55 Pu Facility	LA114A			85 GAL	451	3.05	0.00551	26.66017	0.020611												0.101349				
TA-55 Pu Facility	LA114A			55 GAL	453	2.38	0.001424	13.3584	0.002852												0.02851				
TA-55 Pu Facility	LA114A			55 GAL	453	2.69	0.005504	51.62182	0.01102												0.110172				
TA-55 Pu Facility	LA114B			55 GAL	453	4.942	0.009297	87.19	0.01859												0.1859				
TA-55 Pu Facility	LA114B			55 GAL	454	0.5909	0.001344	12.23	0.0116												0.02611				
TA-55 Pu Facility	LA114A			85 GAL	455	2.22	0.001519	14.24083	0.00304												0.030393				
TA-55 Pu Facility	LA114A			85 GAL	456	3.2	0.001848	17.32931	0.0037												0.036985				
TA-55 Pu Facility	LA114A			85 GAL	456	8.67	0.004235	39.71848	0.008479												0.084768				
TA-55 Pu Facility	LA114A			55 GAL	457	0.36	0.000651	6.10187	0.001303												0.013023				
TA-55 Pu Facility	LA114A			85 GAL	457	4.91	0.001632	15.30161	0.003267												0.032657				
TA-55 Pu Facility	LA114A			85 GAL	457	4.73	0.004053	38.00996	0.008115												0.081122				
TA-55 Pu Facility	LA114A			55 GAL	458	2.92	0.002333	21.88224	0.004672												0.046701				
TA-55 Pu Facility	LA114A			55 GAL	458	16.24	0.00335	31.41994	0.006708												0.067057				
TA-55 Pu Facility	LA114A			55 GAL	459	1.14	0.0013	12.19435	0.002603												0.026025				
TA-55 Pu Facility	LA114A			55 GAL	459	7.88	0.006684	62.68028	0.013381												0.133773				
TA-55 Pu Facility	LA114A			85 GAL	460	3.72	0.001576	14.77591	0.003154												0.031535				
TA-55 Pu Facility	LA114B			55 GAL	460	3.062	0.002721	25.52	0.005442												0.05442				
TA-55 Pu Facility	LA114A			55 GAL	461	5.85	0.002943	27.59923	0.005892												0.058903				
TA-55 Pu Facility	LA114A			85 GAL	461	4.41	0.003416	19.49035	0.203363												0.04492				
TA-55 Pu Facility	LA114A			85 GAL	462	0.68	0.009964	93.4431	0.019949												0.199428				
TA-55 Pu Facility	LA114A			55 GAL	463	12.81	0.00419	39.29604	0.008389												0.083866				
TA-55 Pu Facility	LA114A			55 GAL	463	4.41	0.01019	11.40256	0.469897												0.132583				
TA-55 Pu Facility	LA114A			85 GAL	463	1.47	0.003145	29.4955	0.006297												0.06295				
TA-55 Pu Facility	LA114A			85 GAL	463	0.32	0.003887	36.45163	0.007782												0.077796				
TA-55 Pu Facility	LA114A			85 GAL	463	9.88	0.001873	17.564	0.00375												0.037485				
TA-55 Pu Facility	LA114B			55 GAL	463.4	8.306	0.002746	25.7473	0.005491												0.05491				
TA-55 Pu Facility	LA114A			85 GAL	464	5.75	0.001974	18.51213	0.003952												0.039509				
TA-55 Pu Facility	LA114A			85 GAL	465	0.65	0.008595	80.60101	0.017207												0.17202				
TA-55 Pu Facility	LA114A			85 GAL	466	4.17	0.007063	53.68899	0.210664												0.117907				
TA-55 Pu Facility	LA114A			85 GAL	466	3.64	0.007511	70.44374	0.015039												0.150342				
TA-55 Pu Facility	LA114A			55 GAL	467	5.69	0.011938	19.28022	0.058944												0.20712				
TA-55 Pu Facility	LA114A			85 GAL	467	4.43	0.004189	39.28665	0.008387												0.083846				
TA-55 Pu Facility	LA114A			85 GAL	467	5.242824	0.004153	38.70142	0.008312												0.08502				
TA-55 Pu Facility	LA114A			55 GAL	468	3.64	0.003005	28.18125	0.006016												0.060145				
TA-55 Pu Facility	LA114A			85 GAL	468	6.42	0.002005	18.80315	0.004014												0.04013				
TA-55 Pu Facility	LA114A			85 GAL	468	1.94	0.002118	19.86393	0.004241												0.042394				
TA-55 Pu Facility	LA114A			55 GAL	469	3.37	0.002328	21.83531	0.004661												0.046601				
TA-55 Pu Facility	LA114A			55 GAL	469	6.7	0.003564	33.41947	0.007135												0.071324				
TA-55 Pu Facility	LA114A			55 GAL	469	5.05	0.011256	63.72527	0.037318												0.207018				
TA-55 Pu Facility	LA114A			55 GAL	470	3.73	0.003193	29.9461	0.006393												0.063912				

Generatiion Location	TRUCON	RSWD Code	IDC	Container Type	Net Wt (lbs)	Am-241 g	Pu-238 g	Pu-239 g	Pu-242 g	U-233 g	U-234 g	U-238 g	Sr-90 g	Cs-137-g	Am-243 g	Cl-36 g	Co-60 g	H-3 g	Na-22 g	Pu-236 g	Pu-241 g	Ra-226 g	Th-228 g	U-232 g	U-235 g
TA-55 Pu Facility	LA114A			55 GAL	470	8.1	0.005963	55.92129	0.011938												0.119348				
TA-55 Pu Facility	LA114B			55 GAL	470	5.992	0.004105	38.49	0.008209												0.08209				
TA-55 Pu Facility	LA114A			85 GAL	471	2	0.002826	26.50089	0.005658												0.056559				
TA-55 Pu Facility	LA114A			55 GAL	472	39.01	0.003859	36.18878	0.007726												0.077235				
TA-55 Pu Facility	LA114A			85 GAL	473	0.82	0.001619	15.17957	0.003241												0.032397				
TA-55 Pu Facility	LA114A			55 GAL	474	6.5	0.004853	45.51056	0.009716												0.097129				
TA-55 Pu Facility	LA114A			85 GAL	474	13.8	0.003001	21.10206	0.006416												0.051406				
TA-55 Pu Facility	LA114B			55 GAL	474	5.229	0.001913	17.94	0.003826												0.03826				
TA-55 Pu Facility	LA114A			55 GAL	475	0.6	0.001078	10.11033	0.002158												0.021578				
TA-55 Pu Facility	LA114A			85 GAL	475	8.62	0.003007	28.20003	0.00602												0.060185				
TA-55 Pu Facility	LA114A			85 GAL	475	0.72	0.005026	17.84188	0.011765												0.064591				
TA-55 Pu Facility	LA114A			55 GAL	477	2.9	0.002806	26.31314	0.005617												0.056158				
TA-55 Pu Facility	LA114A			85 GAL	477	2.54	0.005393	50.57981	0.010798												0.107948				
TA-55 Pu Facility	LA114A			55 GAL	478	28.86	0.005404	50.68307	0.01082												0.108169				
TA-55 Pu Facility	LA114A			85 GAL	478	7.5	0.003242	30.40609	0.006491												0.064893				
TA-55 Pu Facility	LA114A			55 GAL	478	1.26	0.005056	47.41622	0.010123												0.101197				
TA-55 Pu Facility	LA114A			55 GAL	478	6.32	0.003659	34.31128	0.007325												0.073228				
TA-55 Pu Facility	LA114A			55 GAL	478	4.82	0.001743	16.34362	0.003489												0.034881				
TA-55 Pu Facility	LA114B			55 GAL	478	6.31	0.003319	31.12	0.006638												0.06638				
TA-55 Pu Facility	LA114A			55 GAL	481	3.98	0.002499	23.44057	0.005004												0.050027				
TA-55 Pu Facility	LA114A			85 GAL	481	3.61	0.011261	105.6093	0.022546												0.225393				
TA-55 Pu Facility	LA114A			55 GAL	482	0.73	0.00106	9.941354	0.002122												0.021217				
TA-55 Pu Facility	LA114A			55 GAL	482	0.71	0.003478	32.62153	0.006964												0.069621				
TA-55 Pu Facility	LA114A			85 GAL	482	14.12	0.001902	17.83624	0.003808												0.038066				
TA-55 Pu Facility	LA114B			55 GAL	482	6.052	0.004557	42.74	0.009114												0.09114				
TA-55 Pu Facility	LA114A			55 GAL	483	2.97	0.006898	64.68921	0.01381												0.138061				
TA-55 Pu Facility	LA114A			55 GAL	483	4.4	0.002622	24.58584	0.005249												0.052472				
TA-55 Pu Facility	LA114A			55 GAL	483	4.61	0.0201	49.14118	0.106355												0.390564				
TA-55 Pu Facility	LA114A			85 GAL	483	7.11	0.008002	57.09574	0.022775												0.154099				
TA-55 Pu Facility	LA114B			55 GAL	483.6	0.188	0.001639	15.36773	0.003277												0.032774				
TA-55 Pu Facility	LA114B			55 GAL	484.6	8.122	0.002637	24.72791	0.005274												0.052736				
TA-55 Pu Facility	LA114A			85 GAL	485	3.34	0.002384	22.36101	0.004774												0.047723				
TA-55 Pu Facility	LA114B			55 GAL	485	4.124	0.004948	46.4	0.009896												0.09896				
TA-55 Pu Facility	LA114A			55 GAL	486	4.56	0.003688	34.58352	0.007383												0.073809				
TA-55 Pu Facility	LA114A			55 GAL	486	4.78	0.00318	29.82406	0.006367												0.063651				
TA-55 Pu Facility	LA114A			55 GAL	486	5.09	0.00254	23.81607	0.005084												0.050829				
TA-55 Pu Facility	LA114A			55 GAL	486	4.26	0.004316	40.47887	0.008642												0.086391				
TA-55 Pu Facility	LA114A			85 GAL	487	12.86	0.010196	59.70644	0.0225												0.159931				
TA-55 Pu Facility	LA114A			85 GAL	487	12.99	0.012045	29.97256	0.054931												0.214205				
TA-55 Pu Facility	LA114A			85 GAL	488	99.9	0.004484	42.05596	0.008978												0.089757				
TA-55 Pu Facility	LA114A			55 GAL	488	3.31	0.001849	17.3387	0.003702												0.037005				
TA-55 Pu Facility	LA114A			55 GAL	488	17.03	0.003029	28.40655	0.006064												0.060626				
TA-55 Pu Facility	LA114B			55 GAL	488	6.771	0.004319	13.11	0.01022												0.05269				
TA-55 Pu Facility	LA114A			85 GAL	489	3.46	0.003797	35.60676	0.007601												0.075993				
TA-55 Pu Facility	LA114A			55 GAL	490	5.1	0.002292	21.49736	0.004589												0.04588				
TA-55 Pu Facility	LA114A			85 GAL	491	17.32	0.00446	41.83066	0.00893												0.089276				
TA-55 Pu Facility	LA114B			55 GAL	491	5.814	0.003569	25.39	0.007606												0.06145				
TA-55 Pu Facility	LA114B			55 GAL	491	6.469	0.004657	14.14	0.01102												0.05682				
TA-55 Pu Facility	LA114B			55 GAL	491.8	2.798	0.002944	27.60883	0.005888												0.05888				
TA-55 Pu Facility	LA114A			55 GAL	492	63.18	0.00688	64.52023	0.013774												0.1377				
TA-55 Pu Facility	LA114A			55 GAL	492	3.79	0.003141	29.45795	0.006289												0.06287				
TA-55 Pu Facility	LA114B			55 GAL	492.7	6.218	0.00169	15.84601	0.003379												0.033794				
TA-55 Pu Facility	LA114B			55 GAL	492.8	8.323	0.003045	28.55601	0.00609												0.0609				
TA-55 Pu Facility	LA114A			55 GAL	494	2.71	0.002193	20.568	0.004391												0.043897				
TA-55 Pu Facility	LA114A			55 GAL	494	52	0.005666	53.1332	0.011343												0.113398				

Generatiion Location	TRUCON	RSWD Code	IDC	Container Type	Net Wt (lbs)	Am-241 g	Pu-238 g	Pu-239 g	Pu-242 g	U-233 g	U-234 g	U-238 g	Sr-90 g	Cs-137-g	Am-243 g	Cl-36 g	Co-60 g	H-3 g	Na-22 g	Pu-236 g	Pu-241 g	Ra-226 g	Th-228 g	U-232 g	U-235 g
TA-55 Pu Facility	LA114A			55 GAL	495	72.4	0.004374	41.02334	0.008758												0.087553				
TA-55 Pu Facility	LA114A			55 GAL	496	3.27	0.002618	24.54829	0.005241												0.052391				
TA-55 Pu Facility	LA114B			55 GAL	496	2.641	0.008378	78.57	0.01676												0.1676				
TA-55 Pu Facility	LA114B			55 GAL	496	6.362	0.006047	18.36	0.01431												0.07378				
TA-55 Pu Facility	LA114B			55 GAL	496.4	7.931	0.005164	48.42893	0.010328												0.103282				
TA-55 Pu Facility	LA114B			55 GAL	496.6	7.196	0.009167	85.96531	0.018333												0.183334				
TA-55 Pu Facility	LA114B			55 GAL	497.2	21.46	1.52356	94.88232	0.03057			497.9521									0.23678				1.0479
TA-55 Pu Facility	LA114B			55 GAL	497.2	7.168	0.002159	20.24241	0.004317												0.04317				
TA-55 Pu Facility	LA114B			55 GAL	497.8	8.276	0.002595	24.33591	0.00519												0.0519				
TA-55 Pu Facility	LA114B			55 GAL	499	7.344	0.008	75.02212	0.016												0.159996				
TA-55 Pu Facility	LA114A			85 GAL	500	4.78	0.001979	18.55907	0.003962												0.039609				
TA-55 Pu Facility	LA114A			85 GAL	501		0.016581	85.12495	0.037287												0.245375				
TA-55 Pu Facility	LA114B			55 GAL	501	1.098	0.000313	1.833	0.02653												0.004				
TA-55 Pu Facility	LA114B			55 GAL	501.2	6.319	0.014257	133.7021	0.028514												0.28514				
TA-55 Pu Facility	LA114B			55 GAL	501.4	7.975	0.004505	42.2507	0.009011												0.090106				
TA-55 Pu Facility	LA114B			55 GAL	501.8	8.301	0.003983	37.34789	0.007965												0.07965				
TA-55 Pu Facility	LA114B			55 GAL	502	6.48	0.00569	53.36	0.01138												0.1138				
TA-55 Pu Facility	LA114A			55 GAL	503	69.51	0.004657	43.67061	0.009323												0.093203				
TA-55 Pu Facility	LA114B			55 GAL	503	3.499	0.009444	35.27	0.02197												0.1233				
TA-55 Pu Facility	LA114B			55 GAL	503	5.814	0.003569	25.39	0.007606												0.06145				
TA-55 Pu Facility	LA114B			55 GAL	503.6	6.413	0.001764	16.54561	0.003529												0.035286				
TA-55 Pu Facility	LA114B			55 GAL	504	2.116	0.000772	7.239	0.001544												0.01544				
TA-55 Pu Facility	LA114B			55 GAL	504	6.771	0.004319	13.11	0.01022												0.05269				
TA-55 Pu Facility	LA114B			55 GAL	504	5.995	0.001623	15.22	0.003245												0.03245				
TA-55 Pu Facility	LA114B			55 GAL	504.6	8.832	0.002589	24.27777	0.005178												0.051776				
TA-55 Pu Facility	LA114B			55 GAL	505	6.361	0.006047	18.36	0.01431												0.07378				
TA-55 Pu Facility	LA114A			85 GAL	506.44	1.58	0.007288	37.35928	0.0261												0.135838				
TA-55 Pu Facility	LA114B			55 GAL	507	6.645	0.011905	111.6442	0.02381												0.238098				
TA-55 Pu Facility	LA114B			55 GAL	508	5.926	0.005296	32.15	0.0116												0.08437				
TA-55 Pu Facility	LA114B			55 GAL	508.2	8.39	0.002301	21.58065	0.004602												0.046024				
TA-55 Pu Facility	LA114B			55 GAL	509	5.147	0.006729	63.27	0.01348												0.1344				
TA-55 Pu Facility	LA114B			55 GAL	509.2	6.396	0.012951	121.4582	0.025903												0.259028				
TA-55 Pu Facility	LA114B			55 GAL	509.4	7.697	0.005386	50.51366	0.010773												0.107728				
TA-55 Pu Facility	LA114B			55 GAL	509.6	7.648	0.006192	58.06858	0.012384												0.12384				
TA-55 Pu Facility	LA114B			55 GAL	510	8.604	0.00139	13.03167	0.002779												0.027792				
TA-55 Pu Facility	LA114B			55 GAL	510.2	7.293	0.008279	77.63859	0.016558												0.165576				
TA-55 Pu Facility	LA114B			55 GAL	510.4	4.092	0.00299	28.14007	0.006008			0.112656									0.059644				0.205464
TA-55 Pu Facility	LA114B			55 GAL	510.4	6.976	0.009329	87.4883	0.018658												0.186582				
TA-55 Pu Facility	LA114B			55 GAL	511.6	7.316	0.008331	78.13093	0.016663												0.166626				
TA-55 Pu Facility	LA114B			55 GAL	512	5.824	0.003584	24.63	0.007686												0.06063				
TA-55 Pu Facility	LA114B			55 GAL	512.4	6.81	0.010944	102.6356	0.021889												0.218886				
TA-55 Pu Facility	LA114B			55 GAL	512.6	8.451	0.002491	23.36247	0.004982												0.049824				
TA-55 Pu Facility	LA114B			55 GAL	513	7.499	0.007322	68.66853	0.014645												0.146446				
TA-55 Pu Facility	LA114B			55 GAL	513.6	7.234	0.008811	82.62487	0.017621												0.17621				
TA-55 Pu Facility	LA114B			55 GAL	514.2	3.784	0.012305	115.3925	0.024609												0.246092				
TA-55 Pu Facility	LA114B			55 GAL	515.4	6.77	0.010845	101.7035	0.02169												0.216898				
TA-55 Pu Facility	LA114B			55 GAL	516.2	3.779	0.009279	89.30094	0.018896												0.183105				
TA-55 Pu Facility	LA114B			55 GAL	516.4	6.663	0.011325	106.2096	0.022651												0.226508				
TA-55 Pu Facility	LA114B			55 GAL	518.4	6.293	0.011509	107.9277	0.023017												0.230172				
TA-55 Pu Facility	LA114B			55 GAL	519.2	6.699	0.002903	27.21965	0.005805												0.05805				
TA-55 Pu Facility	LA114B			55 GAL	519.4	8.613	0.001347	12.63217	0.002694												0.02694				
TA-55 Pu Facility	LA114B			55 GAL	519.6	4.7856	0.015853	89.61583	0.035131			0.749268									0.244292				0.037532
TA-55 Pu Facility	LA114B			55 GAL	519.8	6.619	0.011675	109.4919	0.023351												0.233508				
TA-55 Pu Facility	LA114B			55 GAL	520.4	7.344	0.008108	76.03776	0.016216												0.162162				
TA-55 Pu Facility	LA114B			55 GAL	520.6	7.493	0.007127	66.83888	0.014254												0.142544				

Generatiion Location	TRUCON	RSWD Code	IDC	Container Type	Net Wt (lbs)	Am-241 g	Pu-238 g	Pu-239 g	Pu-242 g	U-233 g	U-234 g	U-238 g	Sr-90 g	Cs-137-g	Am-243 g	Cl-36 g	Co-60 g	H-3 g	Na-22 g	Pu-236 g	Pu-241 g	Ra-226 g	Th-228 g	U-232 g	U-235 g
TA-55 Pu Facility	LA114B			55 GAL	521	14.61	0.007104	53.49	0.1909			8.808									0.1178				26.42
TA-55 Pu Facility	LA114B			55 GAL	521.6	6.889	0.010089	94.61839	0.020179												0.201788				
TA-55 Pu Facility	LA114B			55 GAL	522	6.336	0.016794	100.1441	0.037083												0.26331				
TA-55 Pu Facility	LA114B			55 GAL	522.8	7.091	0.009379	87.96001	0.018759												0.187588				
TA-55 Pu Facility	LA114B			55 GAL	522.8	6.137	0.015431	144.7119	0.030862												0.30862				
TA-55 Pu Facility	LA114B			55 GAL	524.6	8.392	0.002878	26.98801	0.005756												0.057556				
TA-55 Pu Facility	LA114B			55 GAL	524.8	6.52	0.011795	110.6144	0.02359												0.235902				
TA-55 Pu Facility	LA114B			55 GAL	524.8	6.515	0.012055	113.0555	0.024111												0.241108				
TA-55 Pu Facility	LA114B			55 GAL	524.8	6.566	0.012186	114.2794	0.024372												0.243718				
TA-55 Pu Facility	LA114A			85 GAL	525	1.82	0.001282	12.02538	0.002567												0.025665				
TA-55 Pu Facility	LA114B			55 GAL	526	8.014	0.003939	36.93994	0.007878												0.07878				
TA-55 Pu Facility	LA114B			55 GAL	526.2	6.681	0.011557	108.3797	0.023114												0.231136				
TA-55 Pu Facility	LA114B			55 GAL	526.9	7.248	0.007543	70.74107	0.015087												0.150866				
TA-55 Pu Facility	LA114A		006	55 GAL	527	2.12	0.003285	30.80975	0.006577												0.065755				
TA-55 Pu Facility	LA114B			55 GAL	527	5.999	0.011847	111.104	0.023695												0.236946				
TA-55 Pu Facility	LA114B			55 GAL	527.4	5.995	0.001623	15.21581	0.003245												0.03245				
TA-55 Pu Facility	LA114B			55 GAL	529	0.764	0.000706	6.618	0.001411												0.01411				
TA-55 Pu Facility	LA114A			85 GAL	530	2.46	0.005067	47.51948	0.010145												0.101417				
TA-55 Pu Facility	LA114B			55 GAL	530	8.232	0.002799	26.24621	0.005597												0.055974				
TA-55 Pu Facility	LA114B			55 GAL	530.2	7.903	0.002624	24.61069	0.005249												0.052486				
TA-55 Pu Facility	LA114A			85 GAL	531	0.45	0.000631	5.91412	0.001263												0.012622				
TA-55 Pu Facility	LA114A			85 GAL	531	5.54	0.03071	75.41344	0.14043												0.545829				
TA-55 Pu Facility	LA114B			55 GAL	531.2	7.034	0.009075	85.10816	0.018151												0.181506				
TA-55 Pu Facility	LA114A			85 GAL	532	13.01	0.00223	20.91533	0.004465												0.044638				
TA-55 Pu Facility	LA114B			55 GAL	532.2	8.668	0.003413	32.00618	0.006826												0.068258				
TA-55 Pu Facility	LA114B			55 GAL	532.2	6.987	0.010895	102.1733	0.02179												0.2179				
TA-55 Pu Facility	LA114A			85 GAL	533	2.76	0.003371	31.61707	0.00675												0.067478				
TA-55 Pu Facility	LA114A			85 GAL	534	5.56	0.002625	24.614	0.005255												0.052532				
TA-55 Pu Facility	LA114A			85 GAL	535	7.1	0.004876	45.72647	0.009762												0.09759				
TA-55 Pu Facility	LA114B			55 GAL	535	6.714	0.004134	37.05	0.008368												0.08057				
TA-55 Pu Facility	LA114A			85 GAL	536	6.74	0.002199	20.62432	0.004403												0.044017				
TA-55 Pu Facility	LA114B			55 GAL	536.6	5.892	0.001848	17.33336	0.003697												0.036966				
TA-55 Pu Facility	LA114B			55 GAL	537	7.695048	0.110858	75.55879	8.497397												0.47635				
TA-55 Pu Facility	LA114A			85 GAL	538	3.71	0.003937	36.92101	0.007882												0.078797				
TA-55 Pu Facility	LA114B			55 GAL	539	5.995	0.001623	15.22	0.003245												0.03245				
TA-55 Pu Facility	LA114A			85 GAL	541	1.2	0.000568	5.322708	0.001136												0.01136				
TA-55 Pu Facility	LA114B			55 GAL	541.6	7.326	0.008094	75.90272	0.016187												0.161874				
TA-55 Pu Facility	LA114B			55 GAL	542.2	7.816	0.004416	41.40856	0.008831												0.08831				
TA-55 Pu Facility	LA114A			85 GAL	543	7.18	0.002091	19.61047	0.004187												0.041853				
TA-55 Pu Facility	LA114A			85 GAL	543	2.3	0.001872	17.55461	0.003748												0.037465				
TA-55 Pu Facility	LA114A			85 GAL	543	0.99	0.000973	9.124642	0.001948												0.019474				
TA-55 Pu Facility	LA114B			55 GAL	543	6.362	0.006047	18.36	0.01431												0.07378				
TA-55 Pu Facility	LA114A			85 GAL	545	5.36	0.007975	42.23137	0.028431												0.147976				
TA-55 Pu Facility	LA114B			55 GAL	545.6	6.748	0.010399	97.51995	0.020798												0.207976				
TA-55 Pu Facility	LA114A			85 GAL	546	2.52	0.002457	23.04629	0.00492												0.049186				
TA-55 Pu Facility	LA114A			85 GAL	546	2.96	0.002947	19.99389	0.006345												0.049592				
TA-55 Pu Facility	LA114A			55 GAL	546	2.126604	0.004765	43.50419	0.009315												0.101942				
TA-55 Pu Facility	LA114A			85 GAL	547	6.83	0.002158	20.23943	0.004321												0.043195				
TA-55 Pu Facility	LA114A			85 GAL	547	7.5	0.005105	47.87621	0.010221												0.102178				
TA-55 Pu Facility	LA114B			55 GAL	547	4.019	0.003476	10.55	0.008227												0.04241				
TA-55 Pu Facility	LA114A			85 GAL	548	7.7	0.006365	59.69506	0.012744												0.127402				
TA-55 Pu Facility	LA114B			55 GAL	548	6.757	0.011399	106.8989	0.022798												0.227978				
TA-55 Pu Facility	LA114A			85 GAL	549	4.31	0.002517	23.60016	0.005038												0.050368				
TA-55 Pu Facility	LA114A			85 GAL	549	0.44	0.004306	40.38499	0.008622												0.08619				
TA-55 Pu Facility	LA114B			55 GAL	550.4	6.843	0.009702	90.98911	0.019405												0.194048				

Generatiion Location	TRUCON	RSWD Code	IDC	Container Type	Net Wt (lbs)	Am-241 g	Pu-238 g	Pu-239 g	Pu-242 g	U-233 g	U-234 g	U-238 g	Sr-90 g	Cs-137-g	Am-243 g	Cl-36 g	Co-60 g	H-3 g	Na-22 g	Pu-236 g	Pu-241 g	Ra-226 g	Th-228 g	U-232 g	U-235 g
TA-55 Pu Facility	LA114A			85 GAL	552	11.36	0.002493	23.38424	0.004992												0.049907				
TA-55 Pu Facility	LA114A			85 GAL	553	1.93	0.003373	31.63585	0.006754												0.067518				
TA-55 Pu Facility	LA114A			85 GAL	553	2.51	0.002952	27.68371	0.00591												0.059083				
TA-55 Pu Facility	LA114A			85 GAL	554	4.88	0.017737	33.47736	2.116343												0.106634				
TA-55 Pu Facility	LA114A			85 GAL	554	11.62	0.001818	17.04769	0.003639												0.036383				
TA-55 Pu Facility	LA114B			55 GAL	554.6	7.942	0.004832	45.30981	0.009663												0.09663				
TA-55 Pu Facility	LA114B			55 GAL	555.4	6.397	0.001926	18.06203	0.003852												0.03852				
TA-55 Pu Facility	LA114A			85 GAL	556	8.1	0.002942	27.58984	0.00589												0.058883				
TA-55 Pu Facility	LA114A			85 GAL	556	5.25	0.004191	39.30543	0.008391												0.083886				
TA-55 Pu Facility	LA114B			55 GAL	556	0.54	0.003009	28.22	0.006018												0.06018				
TA-55 Pu Facility	LA114B			55 GAL	556.2	7.912	0.005063	47.47894	0.010126												0.101256				
TA-55 Pu Facility	LA114B			55 GAL	557	5.982208	0.408637	13.21391	33.5998												1.276823				
TA-55 Pu Facility	LA114B			55 GAL	558	3.315	0.005639	52.88	0.01128												0.1128				
TA-55 Pu Facility	LA114B			55 GAL	558	7.217	0.008587	80.53076	0.017174												0.171744				
TA-55 Pu Facility	LA114A			85 GAL	559	9.14	0.004881	45.77341	0.009772												0.09769				
TA-55 Pu Facility	LA114B			55 GAL	560.4	10.158	0.014377	134.8294	0.028754												0.287544				
TA-55 Pu Facility	LA114A			85 GAL	562	3.23	0.003208	30.08691	0.006423												0.064212				
TA-55 Pu Facility	LA114A			85 GAL	562	3.8	0.004962	30.04585	0.010893												0.079051				
TA-55 Pu Facility	LA114B			55 GAL	563	7.517	0.006264	58.74379	0.012528												0.12528				
TA-55 Pu Facility	LA114A			85 GAL	565	9.5	0.003984	37.36222	0.007976												0.079739				
TA-55 Pu Facility	LA114B			55 GAL	565	21.27	0.009633	56.81	0.02848												0.1764				
TA-55 Pu Facility	LA114A			85 GAL	566	11.76	0.002937	27.5429	0.00588												0.058783				
TA-55 Pu Facility	LA114A			85 GAL	566	10.7	0.003313	31.0726	0.006633												0.066316				
TA-55 Pu Facility	LA114A			85 GAL	566	3.71	0.006946	65.13981	0.013906												0.139023				
TA-55 Pu Facility	LA114B			55 GAL	566	3.778	0.007994	75.04	0.016												0.1598				
TA-55 Pu Facility	LA114A			85 GAL	569	2.17	0.001901	17.82685	0.003806												0.038046				
TA-55 Pu Facility	LA114B			55 GAL	569	9.418	0.3182	17.46	22.4			11.03									1.161				4.714
TA-55 Pu Facility	LA114B			55 GAL	570	29.86	0.02245	115.4	0.05041												0.3321				
TA-55 Pu Facility	LA114B			55 GAL	571	34.23	0.0114	88.34	0.02388												0.2052				
TA-55 Pu Facility	LA114B			55 GAL	572.6	7.44	0.007767	72.83893	0.015534												0.15534				
TA-55 Pu Facility	LA114B			55 GAL	573	26.66	0.008854	66.45	0.01867												0.1567				
TA-55 Pu Facility	LA114B			55 GAL	574	3.322	0.01127	105.4	0.02267			9.153									0.225				1.459
TA-55 Pu Facility	LA114A			85 GAL	576	3.8	0.002212	20.74636	0.004429												0.044277				
TA-55 Pu Facility	LA114B			55 GAL	576.8	7.561	0.006545	61.38089	0.01309												0.130904				
TA-55 Pu Facility	LA114B			55 GAL	578	5.197	0.002936	27.53	0.005871												0.05871				
TA-55 Pu Facility	LA114A			85 GAL	579	3.18	0.003234	30.33099	0.006475												0.064733				
TA-55 Pu Facility	LA114B			55 GAL	580	33.36	0.01106	86.56	0.02312												0.2001				
TA-55 Pu Facility	LA114B			55 GAL	580	8.034	0.1545	20.37	12.58			2.941									0.5107				
TA-55 Pu Facility	LA114B			55 GAL	581	2.825	0.002401	22.52	0.004803												0.04803				
TA-55 Pu Facility	LA114A			85 GAL	582	6.83	0.004524	42.43146	0.009058												0.090558				
TA-55 Pu Facility	LA114A			55 GAL	582	1.266628	0.007483	68.34301	0.014628												0.160097				
TA-55 Pu Facility	LA114B			55 GAL	585.6	7.618	0.00527	49.42394	0.01054												0.105404				
TA-55 Pu Facility	LA114B			55 GAL	586	26.13	0.01021	68.34	0.022												0.1705				
TA-55 Pu Facility	LA114B			55 GAL	586	2.737	0.008298	77.82	0.0166												0.166				
TA-55 Pu Facility	LA114B			55 GAL	586	1.86	0.002543	23.85	0.005086												0.05086				
TA-55 Pu Facility	LA114B			55 GAL	586	2.081	0.006139	57.57	0.01228												0.1228				
TA-55 Pu Facility	LA114B			55 GAL	587	1.28	9.715	9.128	0.01203												0.05311				
TA-55 Pu Facility	LA114B			55 GAL	587	20.49	0.0349	56.42	2.725			17.09									0.2428				41.91
TA-55 Pu Facility	LA114B			55 GAL	587	7.351	0.006153	57.7019	0.012306												0.123058				
TA-55 Pu Facility	LA114B			55 GAL	588	10.7	0.001843	17.29	0.003687												0.03687				
TA-55 Pu Facility	LA114B			55 GAL	588.8	6.159	0.006364	59.6769	0.012727												0.12727				
TA-55 Pu Facility	LA114B			55 GAL	590	32.35	0.01329	94.65	0.02832												0.2289				
TA-55 Pu Facility	LA114B			55 GAL	591	18.15	0.007484	57.05	0.1917			8.808									0.1254				26.42
TA-55 Pu Facility	LA114B			55 GAL	591	7.954	0.004806	45.06598	0.009611												0.09611				
TA-55 Pu Facility	LA114B			55 GAL	591.2	6.924	0.0093	87.21821	0.018601												0.186006				

Generatiion Location	TRUCON	RSWD Code	IDC	Container Type	Net Wt (lbs)	Am-241 g	Pu-238 g	Pu-239 g	Pu-242 g	U-233 g	U-234 g	U-238 g	Sr-90 g	Cs-137-g	Am-243 g	Cl-36 g	Co-60 g	H-3 g	Na-22 g	Pu-236 g	Pu-241 g	Ra-226 g	Th-228 g	U-232 g	U-235 g
TA-55 Pu Facility	LA114B			55 GAL	592	26.93	0.01957	96.8	0.04416												0.2848				
TA-55 Pu Facility	LA114B			55 GAL	592	2.662	0.003582	10.87	0.008477												0.0437				
TA-55 Pu Facility	LA114B			55 GAL	592.7	0.29	0.003806	35.69079	0.007612												0.076116				
TA-55 Pu Facility	LA114B			55 GAL	594.2	0.072072	0.003221	30.21045	0.006443												0.064428				
TA-55 Pu Facility	LA114B			55 GAL	596.8	7.697	0.006429	60.29491	0.012859												0.128588				
TA-55 Pu Facility	LA114B			55 GAL	597	3.358	0.001436	13.46	0.002872												0.02872				
TA-55 Pu Facility	LA114B			55 GAL	599	4.321	0.000911	2.764	0.002155												0.01111				
TA-55 Pu Facility	LA114B			55 GAL	599	7.512	0.002853	26.75	0.005705												0.05705				
TA-55 Pu Facility	LA114B			55 GAL	599.8	0.213	0.004954	46.45861	0.009908												0.09908				
TA-55 Pu Facility	LA114B			55 GAL	601.4	7.004	0.006532	61.25334	0.013063												0.130632				
TA-55 Pu Facility	LA114B			55 GAL	602	1.742	0.004655	43.65	0.00931												0.0931				
TA-55 Pu Facility	LA114B			55 GAL	603	3.823	0.00594	55.71	0.01188												0.1188				
TA-55 Pu Facility	LA114B			55 GAL	603.6	0.150074	0.007564	70.93771	0.015129												0.151285				
TA-55 Pu Facility	LA114B			55 GAL	604	26.11	0.009542	69.87	0.02022												0.1667				
TA-55 Pu Facility	LA114B			55 GAL	604	4.261	0.005154	9.792	0.02241												0.08963				
TA-55 Pu Facility	LA114B			55 GAL	605	1.137	0.001528	14.33	0.003056												0.03056				
TA-55 Pu Facility	LA114B			55 GAL	607	4.734	0.008091	75.88	0.01618												0.1618				
TA-55 Pu Facility	LA114B			55 GAL	607	4.025	0.001461	13.7	0.002922												0.02922				
TA-55 Pu Facility	LA114B			55 GAL	607	5.743	0.05544	46.3	4.178												0.2532				
TA-55 Pu Facility	LA114A			55 GAL	610	6.17	0.004465	41.8776	0.00894												0.089376				
TA-55 Pu Facility	LA114B			55 GAL	613.8	7.921	0.005606	52.57307	0.011212												0.11212				
TA-55 Pu Facility	LA114B			55 GAL	617	2.996	0.005937	56.09	0.01193			3.95									0.1183				9.033
TA-55 Pu Facility	LA114B			55 GAL	617.4	5.904	0.013416	125.8152	0.026832												0.26832				
TA-55 Pu Facility	LA114B			55 GAL	619	22.03	0.006992	65.57	0.01398												0.1398				
TA-55 Pu Facility	LA114B			55 GAL	619	0.65	0.009008	84.48	0.01802												0.1802				
TA-55 Pu Facility	LA114B			55 GAL	620	3.896	0.002035	19.08	0.00407												0.0407				
TA-55 Pu Facility	LA114B			55 GAL	620	3.331	0.01041	97.63	0.02082												0.2082				
TA-55 Pu Facility	LA114B			55 GAL	621	2.733	0.0134	126.2	0.02688												0.2675				
TA-55 Pu Facility	LA114B			55 GAL	625	4.69	0.001716	16.09	0.003432												0.03432				
TA-55 Pu Facility	LA114B			55 GAL	626	5.418	0.001137	3.452	0.002691												0.01387				
TA-55 Pu Facility	LA114B			55 GAL	628	0.934	0.000612	5.737	0.001224												0.01224				
TA-55 Pu Facility	LA114B			55 GAL	630	3.503	0.06934	12.24	5.616												0.2346				
TA-55 Pu Facility	LA114B			55 GAL	630.6	7.916	0.004684	43.92561	0.009368												0.093678				
TA-55 Pu Facility	LA114B			55 GAL	631	3.706	0.003092	28.99	0.006184												0.06184				
TA-55 Pu Facility	LA114A			55 GAL	632	2.661902	0.001926	17.58543	0.003765												0.041214				
TA-55 Pu Facility	LA114B			55 GAL	632	1.422	0.001368	12.83	0.002736												0.02736				
TA-55 Pu Facility	LA114B			55 GAL	632	1.671	0.005375	32.68	0.0195			30.32									0.1029				32.75
TA-55 Pu Facility	LA114B			55 GAL	634	5.511	0.000981	2.978	0.002322												0.01197				
TA-55 Pu Facility	LA114B			55 GAL	634.4	7.131	0.005457	51.17575	0.010914												0.10914				
TA-55 Pu Facility	LA114B			55 GAL	634.6	4.618	0.015648	146.7469	0.031296												0.31296				
TA-55 Pu Facility	LA114B			55 GAL	635	8.712	0.002992	28.06	0.005984												0.05984				
TA-55 Pu Facility	LA114B			55 GAL	635.8	5.88	0.012072	113.2112	0.024144												0.24144				
TA-55 Pu Facility	LA114B			55 GAL	637.4	6.156488	0.013352	125.2122	0.026703												0.267034				
TA-55 Pu Facility	LA114A			55 GAL	639	4.591599	0.001928	17.60155	0.00377												0.041252				
TA-55 Pu Facility	LA114B			55 GAL	639	17.69	0.005274	49.46	0.01055												0.1055				
TA-55 Pu Facility	LA114B			55 GAL	639.8	6.413	0.001764	16.54561	0.003529												0.035286				
TA-55 Pu Facility	LA114B			55 GAL	642	30.19	0.009968	75.68	0.02096												0.1775				
TA-55 Pu Facility	LA114B			55 GAL	642	21.76	0.007016	65.8	0.01403												0.1403				
TA-55 Pu Facility	LA114A			55 GAL	643	4.68	0.005624	52.73893	0.011259												0.112556				
TA-55 Pu Facility	LA114B			55 GAL	644	0.47	0.000407	3.816	0.000814												0.008138				
TA-55 Pu Facility	LA114B			55 GAL	645	3.02	0.001086	10.18	0.002171												0.02171				
TA-55 Pu Facility	LA114A			55 GAL	647	5.207118	0.002148	19.61638	0.0042												0.045971				
TA-55 Pu Facility	LA114A			55 GAL	647	2.712369	0.00245	22.37266	0.004791												0.052437				
TA-55 Pu Facility	LA114B			55 GAL	647	2.887	0.009281	28.18	0.02196												0.1132				
TA-55 Pu Facility	LA114B			55 GAL	647	1.622	0.004106	38.51	0.008212												0.08212				

Generatiion Location	TRUCON	RSWD Code	IDC	Container Type	Net Wt (lbs)	Am-241 g	Pu-238 g	Pu-239 g	Pu-242 g	U-233 g	U-234 g	U-238 g	Sr-90 g	Cs-137-g	Am-243 g	Cl-36 g	Co-60 g	H-3 g	Na-22 g	Pu-236 g	Pu-241 g	Ra-226 g	Th-228 g	U-232 g	U-235 g
TA-55 Pu Facility	LA114B			55 GAL	649	2.411	0.00296	27.87	0.005937												0.05907				
TA-55 Pu Facility	LA114B			55 GAL	650	3.806	0.000542	5.079	0.001083												0.01083				
TA-55 Pu Facility	LA114B			55 GAL	650	3.248	0.003526	33.06	0.007051												0.07051				
TA-55 Pu Facility	LA114B			55 GAL	650.6	6.398	0.012739	119.4626	0.025477												0.254772				
TA-55 Pu Facility	LA114A			55 GAL	651	4.372812	0.003739	34.13927	0.00731												0.08001				
TA-55 Pu Facility	LA114B			55 GAL	651	0.964	0.06336	4.34	0.000991			134.9									0.009473				53.03
TA-55 Pu Facility	LA114B			55 GAL	651	0.531	0.000571	5.352962	0.001142												0.011416				
TA-55 Pu Facility	LA114B			55 GAL	651.4	3.737054	0.069705	129.4755	4.63931												0.447521				
TA-55 Pu Facility	LA114B			55 GAL	652	1.945	0.000759	7.12	0.001518												0.01518				
TA-55 Pu Facility	LA114B			55 GAL	653	1.135	0.001546	14.49	0.003091												0.03091				
TA-55 Pu Facility	LA114A			55 GAL	654	3.71	0.018324	85.09143	0.801869												0.228938				
TA-55 Pu Facility	LA114A			55 GAL	654	5.48	0.002802	26.28	0.005604												0.05604				
TA-55 Pu Facility	LA114B			55 GAL	654	3.108	0.007262	68.11	0.01452												0.1452				
TA-55 Pu Facility	LA114B			55 GAL	654	1.11	0.06376	5.544	0.001248			135.6									0.01204				53.29
TA-55 Pu Facility	LA114A			55 GAL	655	2.35	0.005965	55.94006	0.011942												0.119388				
TA-55 Pu Facility	LA114B			55 GAL	655	0.938	0.06305	3.646	0.000843			134.4									0.007993				52.84
TA-55 Pu Facility	LA114B			55 GAL	656	6.953	0.009716	91.1204	0.019433												0.194328				
TA-55 Pu Facility	LA114A			55 GAL	657	3.57	0.009127	85.59515	0.018273												0.182679				
TA-55 Pu Facility	LA114A			55 GAL	657	0.98	0.000204	1.913	0.000408												0.00408				
TA-55 Pu Facility	LA114B			55 GAL	657	5.578	0.000893	2.712	0.002114												0.0109				
TA-55 Pu Facility	LA114B			55 GAL	658	25.87	0.01047	85.79	0.02167												0.1942				
TA-55 Pu Facility	LA114B			55 GAL	658	9.398	0.002587	24.26	0.005175												0.05175				
TA-55 Pu Facility	LA114B			55 GAL	658	1.836	0.005865	55	0.01173												0.1173				
TA-55 Pu Facility	LA114B			55 GAL	658.6	6.595	0.002892	27.12024	0.005784												0.057838				
TA-55 Pu Facility	LA114A			55 GAL	660	3.44	0.002865	26.867	0.005736												0.05734				
TA-55 Pu Facility	LA114B			55 GAL	660	2.2	0.004847	45.45	0.009693												0.09693				
TA-55 Pu Facility	LA114B			55 GAL	661	11.27	0.01058	32.12	0.02504												0.1291				
TA-55 Pu Facility	LA114A			55 GAL	662	3.35	0.006059	56.82249	0.012131												0.121272				
TA-55 Pu Facility	LA114B			55 GAL	662	4.494	0.009006	27.34	0.02131												0.1099				
TA-55 Pu Facility	LA114B			55 GAL	663.2	6.919	0.008822	82.73084	0.017644												0.176436				
TA-55 Pu Facility	LA114B			55 GAL	664	2.993	0.002677	25.11	0.005354												0.05354				
TA-55 Pu Facility	LA114B			55 GAL	664	11.64	0.00215	20.16	0.0043												0.043				
TA-55 Pu Facility	LA114B			55 GAL	664	5.182	0.008514	79.84	0.01703												0.1703				
TA-55 Pu Facility	LA114A			55 GAL	666	5.4	0.036807	83.88907	4.165994												0.248238				
TA-55 Pu Facility	LA114B			55 GAL	666	3.679	0.004621	12.7	0.01325												0.06244				
TA-55 Pu Facility	LA114B			55 GAL	666	5.067	0.01244	36.64	0.03141												0.1569				
TA-55 Pu Facility	LA114A			55 GAL	669	1.181447	0.002144	19.56802	0.00419												0.045864				
TA-55 Pu Facility	LA114B			55 GAL	669	3.547	0.02782	52.87	0.121												0.4839				
TA-55 Pu Facility	LA114A			55 GAL	670	3.74	0.013203	123.821	0.026434												0.264261				
TA-55 Pu Facility	LA114A			85 GAL	670.4	6.31	0.011693	42.48868	1.075386												0.108469				
TA-55 Pu Facility	LA114A			55 GAL	672	3.28	0.006146	57.6392	0.012305												0.123015				
TA-55 Pu Facility	LA114B			55 GAL	672	1.598	0.00225	21.1	0.0045												0.045				
TA-55 Pu Facility	LA114B			55 GAL	672	2.802	0.01185	35.97	0.02804												0.1446				
TA-55 Pu Facility	LA114A			55 GAL	673	2.82	0.011031	103.4502	0.022085												0.220785				
TA-55 Pu Facility	LA114B			55 GAL	673	3.039	0.00663	62.17	0.01326												0.1326				
TA-55 Pu Facility	LA114A			55 GAL	674	1.47	0.020374	45.66424	2.318146												0.135967				
TA-55 Pu Facility	LA114A			55 GAL	676	2.646149	0.001736	15.85268	0.003393												0.037146				
TA-55 Pu Facility	LA114B			55 GAL	677	2.6	0.003405	31.93	0.00681												0.0681				
TA-55 Pu Facility	LA114A			55 GAL	678	3.6	0.018602	100.6452	1.193262												0.234347				
TA-55 Pu Facility	LA114B			55 GAL	678	3.907	0.005483	51.42	0.01097												0.1097				
TA-55 Pu Facility	LA114B			55 GAL	678	28.2	0.01012	71.83	0.02157												0.174				
TA-55 Pu Facility	LA114A			55 GAL	679	2.79	0.021963	83.4454	1.962962												0.21054				
TA-55 Pu Facility	LA114A			55 GAL	679		0.003423	6.331399	0.014544		0.999679	22476.62									0.06368				133.2987
TA-55 Pu Facility	LA114A			55 GAL	680	3.46	0.041878	61.32289	5.274363												0.218647				
TA-55 Pu Facility	LA114B			55 GAL	680	1.293	0.005339	50.07	0.01068												0.1068				

Generatiion Location	TRUCON	RSWD Code	IDC	Container Type	Net Wt (lbs)	Am-241 g	Pu-238 g	Pu-239 g	Pu-242 g	U-233 g	U-234 g	U-238 g	Sr-90 g	Cs-137-g	Am-243 g	Cl-36 g	Co-60 g	H-3 g	Na-22 g	Pu-236 g	Pu-241 g	Ra-226 g	Th-228 g	U-232 g	U-235 g
TA-55 Pu Facility	LA114A			55 GAL	681	5.49	0.016336	109.6526	0.714757												0.245556				
TA-55 Pu Facility	LA114B			55 GAL	681	2.917	0.001067	10.01	0.002135												0.02135				
TA-55 Pu Facility	LA114B			55 GAL	683.6	3.750314	0.069708	129.5065	4.639317												0.447587				
TA-55 Pu Facility	LA114A			55 GAL	684	3.77	0.010039	41.00331	0.852432												0.101585				
TA-55 Pu Facility	LA114B			55 GAL	684	3.726	0.00477	44.73	0.00954												0.0954				
TA-55 Pu Facility	LA114A			55 GAL	685	2.22	0.02706	40.45519	3.395068												0.142834				
TA-55 Pu Facility	LA114A			55 GAL	686	3.85	0.02173	52.47108	2.413341												0.152058				
TA-55 Pu Facility	LA114A			55 GAL	686	3.15	0.04528	65.91755	5.708901												0.235686				
TA-55 Pu Facility	LA114B			55 GAL	686	5.131	0.008002	16.17	0.03309												0.1347				
TA-55 Pu Facility	LA126A		006	55 GAL	687	4.79	0.00672	63.01823	0.013453												0.134495				
TA-55 Pu Facility	LA114A			55 GAL	687	1.257001	0.008044	73.45261	0.015723												0.172136				
TA-55 Pu Facility	LA114A			55 GAL	687	5.746791	0.007384	67.42424	0.014435												0.157961				
TA-55 Pu Facility	LA114A			55 GAL	689	4.88	0.020057	47.54872	2.056129												0.157436				
TA-55 Pu Facility	LA114A			55 GAL	689	4.61	8.97	22.89	0.01419												0.07987				
TA-55 Pu Facility	LA114A			55 GAL	690	2.655776	0.011216	102.4017	0.021921												0.239903				
TA-55 Pu Facility	LA114A			55 GAL	691	0.651984	0.004089	37.33075	0.007993												0.087495				
TA-55 Pu Facility	LA114A			55 GAL	691	3.83	0.002506	23.5	0.005012												0.05012				
TA-55 Pu Facility	LA114B			55 GAL	691.8	7.177	0.009363	87.80528	0.018726												0.187258				
TA-55 Pu Facility	LA114A			55 GAL	692	5.47	0.005733	53.76217	0.011477												0.11474				
TA-55 Pu Facility	LA114B			55 GAL	692	1.747	0.001655	15.52	0.00331												0.0331				
TA-55 Pu Facility	LA114A			55 GAL	693	3.32	0.005256	49.29372	0.010523												0.105204				
TA-55 Pu Facility	LA114A			55 GAL	693	5.983081	0.035686	40.63507	3.588895		1.01992	22927.99									0.225825				135.9521
TA-55 Pu Facility	LA114B			55 GAL	693	11.39	0.06624	31.31	0.006743			134.9									0.067				53.03
TA-55 Pu Facility	LA114A			55 GAL	695	4.507001	0.008891	81.18956	0.017379												0.190194				
TA-55 Pu Facility	LA114B			55 GAL	695	2.681	0.002094	19.64	0.004188												0.04188				
TA-55 Pu Facility	LA114A			55 GAL	695	1.366686	0.001009	9.216634	0.001973												0.021592				
TA-55 Pu Facility	LA114A			55 GAL	695	2.934656	0.002407	21.98582	0.004705												0.051495				
TA-55 Pu Facility	LA126A		006	55 GAL	696	5.6	0.006388	59.91097	0.01279												0.127863				
TA-55 Pu Facility	LA114A			55 GAL	696	1.8	0.005224	48.99332	0.010459												0.104562				
TA-55 Pu Facility	LA114B			55 GAL	696	1.754	0.006154	57.61	0.01232			6.798									0.1229				1.13
TA-55 Pu Facility	LA114A			55 GAL	697	3.25	0.023004	34.16071	2.88986												0.120995				
TA-55 Pu Facility	LA114A			55 GAL	697	12.1937	0.00958	87.47582	0.018726												0.204951				
TA-55 Pu Facility	LA114A			55 GAL	697	3.65	0.00394	36.95	0.00788												0.0788				
TA-55 Pu Facility	LA114A			55 GAL	698	4.21	0.03081	83.74906	3.275415												0.233082				
TA-55 Pu Facility	LA114B			55 GAL	698	2.404	0.003167	29.7	0.006334												0.06334				
TA-55 Pu Facility	LA114B			55 GAL	698	1.946	0.002339	21.93	0.004678												0.04678				
TA-55 Pu Facility	LA114A			55 GAL	699	2.580222	0.007722	70.48678	0.015089												0.165146				
TA-55 Pu Facility	LA114A			55 GAL	699	0.538798	0.002053	18.74597	0.004014												0.043932				
TA-55 Pu Facility	LA114A			55 GAL	699	4.66	0.004255	39.9	0.00851												0.0851				
TA-55 Pu Facility	LA114B			55 GAL	699	2.541	0.001124	10.54	0.002247												0.02247				
TA-55 Pu Facility	LA114B			55 GAL	700	2.117	0.001437	13.48	0.002875												0.02875				
TA-55 Pu Facility	LA114B			55 GAL	700	1.631	0.001024	9.604	0.002048												0.02048				
TA-55 Pu Facility	LA114A			55 GAL	701	9.396149	0.007214	65.84462	0.014096												0.154272				
TA-55 Pu Facility	LA114B			55 GAL	701	2.181	0.001756	16.47	0.003512												0.03512				
TA-55 Pu Facility	LA114A			55 GAL	701	1.134189	0.000936	8.547711	0.00183												0.020029				
TA-55 Pu Facility	LA114B			55 GAL	701	2.013	0.000772	7.237	0.001543												0.01543				
TA-55 Pu Facility	LA114A			55 GAL	702	6.86	0.012262	97.80279	0.025549												0.224296				
TA-55 Pu Facility	LA114A			55 GAL	702		0.010491	95.82527	0.020512												0.224563				
TA-55 Pu Facility	LA114A			55 GAL	702		0.003427	6.34107	0.014562		1.001928	22527.1									0.063767				133.6108
TA-55 Pu Facility	LA114A			55 GAL	702	8.599767	0.001903	17.37589	0.003719												0.040709				
TA-55 Pu Facility	LA114A			55 GAL	702	3.007585	4.452947	17.61767	0.008286												0.057786				
TA-55 Pu Facility	LA114A			85 GAL	702.8	2.49	0.032058	75.51928	3.590037												0.220796				
TA-55 Pu Facility	LA114A			55 GAL	703	3.49	0.006514	61.0938	0.013043												0.130387				
TA-55 Pu Facility	LA114A		006	55 GAL	703	4.65	0.009334	87.53836	0.018688												0.186826				
TA-55 Pu Facility	LA114A			55 GAL	703	0.689907	0.002567	23.43649	0.005018												0.054932				

Generatiion Location	TRUCON	RSWD Code	IDC	Container Type	Net Wt (lbs)	Am-241 g	Pu-238 g	Pu-239 g	Pu-242 g	U-233 g	U-234 g	U-238 g	Sr-90 g	Cs-137-g	Am-243 g	Cl-36 g	Co-60 g	H-3 g	Na-22 g	Pu-236 g	Pu-241 g	Ra-226 g	Th-228 g	U-232 g	U-235 g
TA-55 Pu Facility	LA114A			55 GAL	703	1.61	0.001433	13.44	0.002866												0.02866				
TA-55 Pu Facility	LA114B			55 GAL	703	1.869	0.000621	5.821	0.001241												0.01241				
TA-55 Pu Facility	LA114B			55 GAL	703	1.753	0.000933	8.746	0.001865												0.01865				
TA-55 Pu Facility	LA114A			55 GAL	704	2.3	0.008204	76.93988	0.016425												0.164206				
TA-55 Pu Facility	LA114A			55 GAL	704	4.76	0.01026	96.22179	0.020542												0.205358				
TA-55 Pu Facility	LA114A			55 GAL	704	0.462952	0.002264	20.66409	0.004424												0.048427				
TA-55 Pu Facility	LA114A			55 GAL	704	6.245624	0.004393	40.11928	0.008586												0.09399				
TA-55 Pu Facility	LA114A			55 GAL	704	4.81	0.003028	28.4	0.006056												0.06056				
TA-55 Pu Facility	LA114A			55 GAL	704	2.75	0.003148	29.52	0.006296												0.06296				
TA-55 Pu Facility	LA114A			55 GAL	705	5.28	0.006899	64.69859	0.013812												0.138081				
TA-55 Pu Facility	LA114B			55 GAL	705	3.214	0.003578	33.55	0.007156												0.07156				
TA-55 Pu Facility	LA114A		006	55 GAL	706	4.93	0.007895	74.03915	0.015806												0.158016				
TA-55 Pu Facility	LA114A			55 GAL	706	2.37	0.032441	93.13746	3.371161												0.254683				
TA-55 Pu Facility	LA114A			55 GAL	706	4.5	0.07491	21.12	9.446												0.221				
TA-55 Pu Facility	LA114A			55 GAL	706	0.765461	0.014592	43.13346	0.033749												0.190388				
TA-55 Pu Facility	LA114A			55 GAL	706	3.623104	0.002897	15.69471	0.009812												0.057786				
TA-55 Pu Facility	LA114A			55 GAL	706	3.59	0.002212	20.74	0.004424												0.04424				
TA-55 Pu Facility	LA114A			55 GAL	706	4.94	0.002014	18.89	0.004028												0.04028				
TA-55 Pu Facility	LA114B			55 GAL	706	2.615	0.000661	6.195	0.001321												0.01321				
TA-55 Pu Facility	LA114A			55 GAL	707	2.54	0.007448	69.85233	0.014912												0.14908				
TA-55 Pu Facility	LA114A			55 GAL	707		0.002515	4.653449	0.010688		0.734779	16519.67									0.046796				97.97086
TA-55 Pu Facility	LA114A			55 GAL	707	1.332555	0.008867	80.99613	0.017336												0.189806				
TA-55 Pu Facility	LA114A			55 GAL	707	0.434656	0.003047	27.82076	0.005955												0.065204				
TA-55 Pu Facility	LA114A			55 GAL	707	1.83	0.000651	6.105	0.001302												0.01302				
TA-55 Pu Facility	LA114B			55 GAL	707	1.932	0.000783	7.347	0.001567												0.01567				
TA-55 Pu Facility	LA114A			55 GAL	708	0.576429	0.004585	41.86009	0.008963												0.098058				
TA-55 Pu Facility	LA114A			55 GAL	708	3.100934	0.006858	62.60477	0.013403												0.146699				
TA-55 Pu Facility	LA114B			55 GAL	708	2.146	0.001365	12.8	0.00273												0.0273				
TA-55 Pu Facility	LA114A			55 GAL	709	2.003501	0.019546	17.40812	2.215232												0.090874				
TA-55 Pu Facility	LA114A			55 GAL	709	1.143524	0.003753	34.26821	0.007336												0.080291				
TA-55 Pu Facility	LA114B			55 GAL	709	1.804	0.001089	10.21	0.002177												0.02177				
TA-55 Pu Facility	LA114A			55 GAL	710	4.101517	0.006712	61.29916	0.013123												0.143689				
TA-55 Pu Facility	LA114A			55 GAL	710	3.46266	0.053408	20.55126	0.00445												0.04834				
TA-55 Pu Facility	LA114B			55 GAL	710	1.996	0.000909	8.528	0.001819												0.01819				
TA-55 Pu Facility	LA114A			55 GAL	711	1.3	0.016789	40.82528	1.860121												0.118016				
TA-55 Pu Facility	LA114A			55 GAL	711	1.275963	0.002237	20.42231	0.004373												0.047864				
TA-55 Pu Facility	LA114A			55 GAL	711	0.793466	0.002433	22.82	0.004866												0.04866				
TA-55 Pu Facility	LA114A			55 GAL	712	2.978413	0.005439	49.66151	0.010632												0.116408				
TA-55 Pu Facility	LA114A			55 GAL	712	4.355309	0.003649	33.31722	0.007132												0.078078				
TA-55 Pu Facility	LA114A			55 GAL	712	3.733956	0.002739	25.01612	0.005354												0.058612				
TA-55 Pu Facility	LA114B			55 GAL	712	2.041	0.001135	10.64	0.00227												0.0227				
TA-55 Pu Facility	LA114B			55 GAL	712	2.386	0.002294	21.51	0.004588												0.04588				
TA-55 Pu Facility	LA114A			55 GAL	713	4.71	0.011077	51.47964	0.842951												0.123748				
TA-55 Pu Facility	LA114A			55 GAL	713	2.4	0.006224	58.37143	0.012461												0.124577				
TA-55 Pu Facility	LA114A			55 GAL	713	6.435239	0.00318	29.02966	0.006215												0.068029				
TA-55 Pu Facility	LA114A			55 GAL	713	4.454492	0.001976	18.03675	0.003861												0.042282				
TA-55 Pu Facility	LA114A			55 GAL	713	2.48	0.001982	18.59	0.003964												0.03964				
TA-55 Pu Facility	LA114B			55 GAL	713	2.583	0.002645	24.8	0.005289												0.05289				
TA-55 Pu Facility	LA114B			55 GAL	713	2.763	0.002818	26.43	0.005636												0.05636				
TA-55 Pu Facility	LA114A			55 GAL	714	2.277713	0.000688	6.283043	0.001345												0.014718				
TA-55 Pu Facility	LA114A			55 GAL	714	2.353267	0.00193	17.61767	0.003772												0.041301				
TA-55 Pu Facility	LA114A			55 GAL	714	3.19	0.004142	38.84	0.008284												0.08284				
TA-55 Pu Facility	LA114B			55 GAL	714	2.737	0.000881	8.263	0.001762												0.01762				
TA-55 Pu Facility	LA114A			55 GAL	715	5.34	0.002332	21.87	0.004664												0.04664				
TA-55 Pu Facility	LA114A			55 GAL	716	3.526838	0.009311	85.00967	0.018199												0.199223				

Generatiion Location	TRUCON	RSWD Code	IDC	Container Type	Net Wt (lbs)	Am-241 g	Pu-238 g	Pu-239 g	Pu-242 g	U-233 g	U-234 g	U-238 g	Sr-90 g	Cs-137-g	Am-243 g	Cl-36 g	Co-60 g	H-3 g	Na-22 g	Pu-236 g	Pu-241 g	Ra-226 g	Th-228 g	U-232 g	U-235 g
TA-55 Pu Facility	LA114B			55 GAL	716	2.328	0.00258	24.19	0.005159												0.05159				
TA-55 Pu Facility	LA114A			55 GAL	716	0.973454	0.0021	19.18117	0.004103												0.044932				
TA-55 Pu Facility	LA114B			55 GAL	716	1.748	0.001145	10.73	0.002289												0.02289				
TA-55 Pu Facility	LA114A			55 GAL	717	0.293466	0.003858	17.60155	0.0131		0.708916	15937.64									0.075786				94.53694
TA-55 Pu Facility	LA114A			55 GAL	717	8.501	0.00353	33.1	0.00706												0.0706				
TA-55 Pu Facility	LA114A			55 GAL	718	0.61727	0.007495	50.58027	0.020285		0.716948	16118.78									0.153495				95.57752
TA-55 Pu Facility	LA114A			55 GAL	718	1.181447	0.001977	18.05287	0.003864												0.042301				
TA-55 Pu Facility	LA114B			55 GAL	718	2.624	0.001078	10.11	0.002155												0.02155				
TA-55 Pu Facility	LA114B			55 GAL	718	1.754	0.001825	17.12	0.003651												0.03651				
TA-55 Pu Facility	LA114A			85 GAL	719	3.24	0.003274	30.70649	0.006555												0.065534				
TA-55 Pu Facility	LA114A			55 GAL	719	1.190782	0.001581	14.4423	0.003092												0.033835				
TA-55 Pu Facility	LA114A			55 GAL	719	3.028005	0.002766	25.2579	0.005405												0.059175				
TA-55 Pu Facility	LA114A			55 GAL	719	4.89	0.001953	18.32	0.003906												0.03906				
TA-55 Pu Facility	LA114A			55 GAL	720	2.692532	4.281792	15.48034	0.007654												0.052136				
TA-55 Pu Facility	LA114A			55 GAL	720	0.921237	0.001025	9.355255	0.002003												0.021922				
TA-55 Pu Facility	LA114A			55 GAL	721	2.55	0.025307	82.33326	2.478305												0.216768				
TA-55 Pu Facility	LA114B			55 GAL	721	2.419	0.001065	9.991	0.002131												0.02131				
TA-55 Pu Facility	LA114A		006	55 GAL	722	7.3	0.01057	99.13192	0.021163												0.211569				
TA-55 Pu Facility	LA114B			55 GAL	723	1.782	0.000732	6.867	0.001465												0.01465				
TA-55 Pu Facility	LA114B			55 GAL	724	1.655	0.002442	22.9	0.004884												0.04884				
TA-55 Pu Facility	LA114B			55 GAL	725	2.239	0.001085	10.17	0.00217												0.0217				
TA-55 Pu Facility	LA114A			55 GAL	726	4.39	0.023597	40.08465	1.94288												0.228804				
TA-55 Pu Facility	LA114A			55 GAL	726	1.69049	0.00242	22.09865	0.00473												0.051777				
TA-55 Pu Facility	LA114A			55 GAL	726	6.24	0.002613	24.5	0.005226												0.05226				
TA-55 Pu Facility	LA114B			55 GAL	726	4.922	0.003146	29.5	0.006291												0.06291				
TA-55 Pu Facility	LA114B			55 GAL	726	2.048	0.001515	14.21	0.00303												0.0303				
TA-55 Pu Facility	LA114A			55 GAL	727	3.42	0.008759	82.14055	0.017536												0.175306				
TA-55 Pu Facility	LA114A			55 GAL	727		0.00375	6.93746	0.015935		1.095743	24635.49									0.069767				146.0978
TA-55 Pu Facility	LA114A		006	55 GAL	728	4.93	0.006884	64.55778	0.013782												0.13778				
TA-55 Pu Facility	LA114A			55 GAL	728	4.46	0.006184	57.99593	0.012381												0.123776				
TA-55 Pu Facility	LA114B			55 GAL	728	2.897	0.001478	13.86	0.002955												0.02955				
TA-55 Pu Facility	LA126A		006	55 GAL	729	5.44	0.005607	52.57934	0.011225												0.112216				
TA-55 Pu Facility	LA114A			55 GAL	729	4.63	0.005804	54.42868	0.01162												0.116163				
TA-55 Pu Facility	LA114A			55 GAL	729	2.13	0.008691	81.50221	0.017399												0.173943				
TA-55 Pu Facility	LA114B			55 GAL	729	1.938	0.002243	21.04	0.004486												0.04486				
TA-55 Pu Facility	LA114B			55 GAL	729	3.02	0.001677	15.73	0.003354												0.03354				
TA-55 Pu Facility	LA114B			55 GAL	730	1.948	0.002127	19.95	0.004254												0.04254				
TA-55 Pu Facility	LA114A			55 GAL	731	4.215286	0.006875	62.78208	0.013441												0.147087				
TA-55 Pu Facility	LA114B			55 GAL	731	2.891	0.003244	30.43	0.006489												0.06489				
TA-55 Pu Facility	LA114A		006	55 GAL	732	2.67	0.00859	56.1207	0.028793												0.169877				
TA-55 Pu Facility	LA114A			55 GAL	733	8.57	0.008019	75.2032	0.016055												0.1605				
TA-55 Pu Facility	LA114A			55 GAL	733	5.46	0.007276	68.23768	0.014568												0.145634				
TA-55 Pu Facility	LA114A			55 GAL	733	2.773337	0.001765	16.11863	0.003451												0.037777				
TA-55 Pu Facility	LA114B			55 GAL	733	2.751	0.001109	10.4	0.002217												0.02217				
TA-55 Pu Facility	LA114A			85 GAL	734	5	0.006842	64.16351	0.013698												0.136939				
TA-55 Pu Facility	LA114A			55 GAL	734	3.17	0.008629	80.92018	0.017275												0.172701				
TA-55 Pu Facility	LA114A			55 GAL	734	1.41	0.001382	12.96	0.002764												0.02764				
TA-55 Pu Facility	LA114B			55 GAL	734	2.768	0.00095	8.906	0.001899												0.01899				
TA-55 Pu Facility	LA114B			55 GAL	735	2.117	0.002169	20.34	0.004338												0.04338				
TA-55 Pu Facility	LA114A			55 GAL	736	5.59	0.007257	68.05932	0.01453												0.145253				
TA-55 Pu Facility	LA114A		006	55 GAL	737	7.23	0.008006	75.08116	0.016029												0.16024				
TA-55 Pu Facility	LA114A			55 GAL	737	2.61	0.003947	37.01488	0.007902												0.078998				
TA-55 Pu Facility	LA114A		006	55 GAL	738	4.56	0.006402	60.0424	0.012818												0.128144				
TA-55 Pu Facility	LA114A			55 GAL	738	4.54	0.006367	59.71384	0.012748												0.127442				
TA-55 Pu Facility	LA114B			55 GAL	738	2.427	0.000682	6.392	0.001363												0.01363				

Generatiion Location	TRUCON	RSWD Code	IDC	Container Type	Net Wt (lbs)	Am-241 g	Pu-238 g	Pu-239 g	Pu-242 g	U-233 g	U-234 g	U-238 g	Sr-90 g	Cs-137-g	Am-243 g	Cl-36 g	Co-60 g	H-3 g	Na-22 g	Pu-236 g	Pu-241 g	Ra-226 g	Th-228 g	U-232 g	U-235 g
TA-55 Pu Facility	LA114A			55 GAL	739	4.26	0.01018	95.47079	0.020381												0.203755				
TA-55 Pu Facility	LA114A		006	55 GAL	739	4.52	0.01002	93.96879	0.020061												0.20055				
TA-55 Pu Facility	LA114A			55 GAL	739	4.62	0.016646	100.9446	0.036531												0.265365				
TA-55 Pu Facility	LA114A			55 GAL	739	3.32	0.005909	55.41437	0.01183												0.118266				
TA-55 Pu Facility	LA114A			55 GAL	739	4.03	0.009846	92.33537	0.019712												0.197064				
TA-55 Pu Facility	LA114A			55 GAL	739	5.23	0.00511	47.92315	0.010231												0.102278				
TA-55 Pu Facility	LA114A			55 GAL	739	7.22	0.003174	29.77	0.006348												0.06348				
TA-55 Pu Facility	LA114B			55 GAL	740	1.847	0.000904	8.478	0.001808												0.01808				
TA-55 Pu Facility	LA114A			85 GAL	741	9.26	0.006774	63.52516	0.013562												0.135577				
TA-55 Pu Facility	LA114A			55 GAL	741	3.36	0.004174	39.14584	0.008357												0.083546				
TA-55 Pu Facility	LA114A			55 GAL	741	3.08	0.008121	76.16072	0.016259												0.162544				
TA-55 Pu Facility	LA114A			55 GAL	741	2.86	0.005366	50.32634	0.010744												0.107407				
TA-55 Pu Facility	LA114B			55 GAL	741	1.914	0.001221	11.45	0.002443												0.02443				
TA-55 Pu Facility	LA114A		006	55 GAL	742	3.52	0.007113	66.70752	0.014241												0.142368				
TA-55 Pu Facility	LA114A			85 GAL	743	6.9	0.006164	57.80818	0.012341												0.123375				
TA-55 Pu Facility	LA114A			55 GAL	743	4.87	0.006009	56.35311	0.01203												0.12027				
TA-55 Pu Facility	LA126A		006	55 GAL	744	7.44	0.024903	96.99369	2.188491												0.24317				
TA-55 Pu Facility	LA114A			55 GAL	744	4.44	0.006261	58.71876	0.012535												0.125319				
TA-55 Pu Facility	LA114A			85 GAL	745	5.293235	0.011098	103.423	0.022212												0.227202				
TA-55 Pu Facility	LA114A			85 GAL	745	1.68	0.004499	42.19678	0.009008												0.090057				
TA-55 Pu Facility	LA114A			55 GAL	745	5.18	0.005412	50.75817	0.010836												0.108329				
TA-55 Pu Facility	LA114A			55 GAL	746		0.003455	6.39265	0.014682		1.00996	22708.24									0.064282				134.6514
TA-55 Pu Facility	LA114B			55 GAL	746	2.585	0.000776	7.281	0.001553												0.01553				
TA-55 Pu Facility	LA114B			55 GAL	746	2.046	0.001016	9.531	0.002033												0.02033				
TA-55 Pu Facility	LA114A			55 GAL	747	2.62	0.006709	62.91497	0.013431												0.134274				
TA-55 Pu Facility	LA114B			55 GAL	747	2.91	0.001181	11.08	0.002363												0.02363				
TA-55 Pu Facility	LA114B			55 GAL	747	2.025	0.000844	7.916	0.001688												0.01688				
TA-55 Pu Facility	LA114A			85 GAL	747.2	4.68	0.006965	65.31817	0.013944												0.139403				
TA-55 Pu Facility	LA114A			55 GAL	748	7.08	0.014827	81.98867	0.033001		0.040987	0.220628									0.22663				4.154464
TA-55 Pu Facility	LA126A		006	55 GAL	748	0.86	0.007791	67.35696	0.015929												0.148919				
TA-55 Pu Facility	LA114A		006	55 GAL	748	5.11	0.007686	72.07716	0.015387												0.153828				
TA-55 Pu Facility	LA114A			55 GAL	748	4.99	0.009632	90.32645	0.019283												0.192776				
TA-55 Pu Facility	LA114A			55 GAL	748	3.51	0.005861	54.96377	0.011734												0.117305				
TA-55 Pu Facility	LA114A			85 GAL	749	10.57	0.014564	136.588	0.029159												0.291509				
TA-55 Pu Facility	LA114A		006	55 GAL	749	5.23	0.009285	87.07838	0.01859												0.185844				
TA-55 Pu Facility	LA114A			55 GAL	749	5.08	0.008683	81.42711	0.017383												0.173783				
TA-55 Pu Facility	LA114B			55 GAL	749	3.44	0.001326	12.43	0.002651												0.02651				
TA-55 Pu Facility	LA114B			55 GAL	749	2.908	0.001151	10.8	0.002303												0.02303				
TA-55 Pu Facility	LA126A		006	55 GAL	750	4.46	0.00766	71.83309	0.015335												0.153307				
TA-55 Pu Facility	LA114A		006	85 GAL	750	10.46	0.04128	80.81687	4.880121												0.253605				
TA-55 Pu Facility	LA114A			55 GAL	750	2.05	0.007156	67.11118	0.014327												0.14323				
TA-55 Pu Facility	LA114A			55 GAL	751	5.24	0.008104	76.00114	0.016225												0.162203				
TA-55 Pu Facility	LA114B			55 GAL	751	4.321	0.001549	14.53	0.003098												0.03098				
TA-55 Pu Facility	LA114A			55 GAL	752	2.84	0.011251	105.5154	0.022526												0.225193				
TA-55 Pu Facility	LA114B			55 GAL	752	1.384	0.002072	19.43	0.004144												0.04144				
TA-55 Pu Facility	LA114A			55 GAL	753	4.35	0.006967	65.33694	0.013948												0.139443				
TA-55 Pu Facility	LA114A		006	55 GAL	753	9.84	0.020605	101.938	0.046559												0.300196				
TA-55 Pu Facility	LA114A			55 GAL	753	5.05	0.01045	98.00542	0.020923												0.209165				
TA-55 Pu Facility	LA114A			55 GAL	753	2.96	0.00834	78.21658	0.016698												0.166931				
TA-55 Pu Facility	LA114B			55 GAL	753	2.027	0.002218	20.8	0.004436												0.04436				
TA-55 Pu Facility	LA126A		006	55 GAL	754	5.65	0.01023	95.94017	0.020482												0.204757				
TA-55 Pu Facility	LA114A			55 GAL	754		0.003768	6.971309	0.016014		1.100723	24745.36									0.070117				146.7742
TA-55 Pu Facility	LA114A		006	55 GAL	755	8.24	0.008034	75.34401	0.016085												0.160801				
TA-55 Pu Facility	LA114A			55 GAL	756	8.28	0.006711	62.93375	0.013435												0.134314				
TA-55 Pu Facility	LA114A			55 GAL	756	3.06	0.006915	64.84879	0.013844												0.138401				

Generatiion Location	TRUCON	RSWD Code	IDC	Container Type	Net Wt (lbs)	Am-241 g	Pu-238 g	Pu-239 g	Pu-242 g	U-233 g	U-234 g	U-238 g	Sr-90 g	Cs-137-g	Am-243 g	Cl-36 g	Co-60 g	H-3 g	Na-22 g	Pu-236 g	Pu-241 g	Ra-226 g	Th-228 g	U-232 g	U-235 g
TA-55 Pu Facility	LA114A			55 GAL	756	3.11	0.046166	66.10654	5.837837												0.238239				
TA-55 Pu Facility	LA114B			55 GAL	756	4.484	0.001161	10.89	0.002322												0.02322				
TA-55 Pu Facility	LA114A		006	55 GAL	758	1.55	0.009087	46.115	0.036745												0.178584				
TA-55 Pu Facility	LA114A			55 GAL	758	9.77	0.00482	45.20077	0.00965												0.096468				
TA-55 Pu Facility	LA114A		006	55 GAL	759	3.77	0.00637	59.742	0.012754												0.127502				
TA-55 Pu Facility	LA114A			85 GAL	760	2.45	0.006368	59.72322	0.01275												0.127462				
TA-55 Pu Facility	LA114A			55 GAL	760	3.593932	0.003762	34.36493	0.007356												0.080505				
TA-55 Pu Facility	LA114B			55 GAL	761	3.028	0.001665	15.61	0.003329												0.03329				
TA-55 Pu Facility	LA114A		006	55 GAL	762	2.32	0.006434	60.3428	0.012882												0.128785				
TA-55 Pu Facility	LA114B			55 GAL	762	2.697	0.002502	23.47	0.005005												0.05005				
TA-55 Pu Facility	LA114B			55 GAL	762	1.367	0.001492	13.99	0.002984												0.02984				
TA-55 Pu Facility	LA114A			55 GAL	763	5.34	0.006296	59.04732	0.012606												0.12602				
TA-55 Pu Facility	LA114A		006	55 GAL	764	5.29	0.009044	84.81599	0.018107												0.181016				
TA-55 Pu Facility	LA126A		006	55 GAL	765	6.6	0.04895	70.81295	6.178656												0.253953				
TA-55 Pu Facility	LA114A			55 GAL	765	8.08	0.005363	50.29818	0.010738												0.107347				
TA-55 Pu Facility	LA114A			55 GAL	765	5.34	0.00674	63.20598	0.013493												0.134895				
TA-55 Pu Facility	LA114A			55 GAL	766	8.51	0.006597	61.86357	0.013207												0.13203				
TA-55 Pu Facility	LA114A			55 GAL	766	4.71	0.006992	65.57163	0.013998												0.139944				
TA-55 Pu Facility	LA114B			55 GAL	767	2.18	0.002109	19.78	0.004218												0.04218				
TA-55 Pu Facility	LA114B			55 GAL	769	3.879	0.003481	32.65	0.006963												0.06963				
TA-55 Pu Facility	LA114A			85 GAL	770	1.058647	0.006773	63.11525	0.013555												0.138653				
TA-55 Pu Facility	LA114A			55 GAL	770	7.37	0.008215	77.04315	0.016447												0.164427				
TA-55 Pu Facility	LA114A		006	55 GAL	771	1.9	0.030376	27.27254	4.095319												0.126428				
TA-55 Pu Facility	LA114B			55 GAL	771	3.375	0.001717	16.1	0.003434												0.03434				
TA-55 Pu Facility	LA114A			55 GAL	772	8.11	0.052848	97.0338	6.348303												0.312651				
TA-55 Pu Facility	LA114A		006	55 GAL	772	5.27	0.008417	78.93942	0.016852												0.168474				
TA-55 Pu Facility	LA114B			55 GAL	772	2.084	0.002077	19.47	0.004153												0.04153				
TA-55 Pu Facility	LA114A			55 GAL	773	4.99	0.008001	75.03422	0.016019												0.160139				
TA-55 Pu Facility	LA114A			55 GAL	774	4.32	0.005255	49.28433	0.010521		0	0									0.105184				0
TA-55 Pu Facility	LA114A			55 GAL	775	6.57	0.009205	86.32738	0.018429												0.184241				
TA-55 Pu Facility	LA114B			55 GAL	775	3.782	0.003458	32.43	0.006916												0.06916				
TA-55 Pu Facility	LA114B			55 GAL	777	2.926	0.001488	13.95	0.002976												0.02976				
TA-55 Pu Facility	LA126A		006	55 GAL	778	3.81	0.007198	63.85106	0.014623												0.139578				
TA-55 Pu Facility	LA114B			55 GAL	778	2.18	0.002052	19.24	0.004104												0.04104				
TA-55 Pu Facility	LA114A			85 GAL	781	5.92	0.006043	56.67229	0.012099												0.120951				
TA-55 Pu Facility	LA114A			55 GAL	781	13.57	0.015933	70.15862	0.036504												0.221474				
TA-55 Pu Facility	LA114B			55 GAL	783	2.122	0.001947	18.25	0.003893												0.03893				
TA-55 Pu Facility	LA114A			55 GAL	784	5.18	0.004268	40.02827	0.008545												0.085429				
TA-55 Pu Facility	LA114A		006	55 GAL	784	5.11	0.006418	60.1926	0.01285												0.128464				
TA-55 Pu Facility	LA114A			55 GAL	785	7.32	0.009649	90.48604	0.019317												0.193117				
TA-55 Pu Facility	LA114A		006	55 GAL	785	4.96	0.009137	85.68903	0.018293												0.182879				
TA-55 Pu Facility	LA126A		006	85 GAL	788	4.51	0.007191	67.43974	0.014397												0.143931				
TA-55 Pu Facility	LA126A		006	55 GAL	790	4.12	0.00791	74.17996	0.015836												0.158316				
TA-55 Pu Facility	LA114A		006	55 GAL	790	3.45	0.054409	46.7174	7.368723												0.222467				
TA-55 Pu Facility	LA114B			55 GAL	793	1.451	0.00144	13.5	0.002879												0.02879				
TA-55 Pu Facility	LA126A		006	55 GAL	795	13.87	0.007674	71.96451	0.015363												0.153588				
TA-55 Pu Facility	LA114A		006	55 GAL	796	1.06	0.006891	64.6235	0.013796												0.137921				
TA-55 Pu Facility	LA114A			55 GAL	798	5.88	0.003185	29.87	0.00637												0.0637				
TA-55 Pu Facility	LA114A			55 GAL	799	4.95	0.046653	86.17463	5.596048												0.276964				
TA-55 Pu Facility	LA114A		006	55 GAL	800	7.73	0.008173	76.64887	0.016363												0.163585				
TA-55 Pu Facility	LA126A		006	55 GAL	804	1.37	0.006573	61.63827	0.013159												0.131549				
TA-55 Pu Facility	LA114A		006	55 GAL	806	1.81	0.003611	33.86068	0.007229												0.072266				
TA-55 Pu Facility	LA126A		006	55 GAL	806	1.78	0.016095	95.78145	0.035429												0.254346				
TA-55 Pu Facility	LA114A		006	55 GAL	807	7.79	0.04993	49.00117	6.666146												0.215612				
TA-55 Pu Facility	LA114A			85 GAL	808	8.19	0.01588	129.879	0.038863												0.311663				

Generatiion Location	TRUCON	RSWD Code	IDC	Container Type	Net Wt (lbs)	Am-241 g	Pu-238 g	Pu-239 g	Pu-242 g	U-233 g	U-234 g	U-238 g	Sr-90 g	Cs-137-g	Am-243 g	Cl-36 g	Co-60 g	H-3 g	Na-22 g	Pu-236 g	Pu-241 g	Ra-226 g	Th-228 g	U-232 g	U-235 g
TA-55 Pu Facility	LA114B			55 GAL	810	2.841	0.002435	22.83	0.004869												0.04869				
TA-55 Pu Facility	LA114A			85 GAL	815	2.38	0.008713	81.70873	0.017443												0.174384				
TA-55 Pu Facility	LA114A			85 GAL	817	3.72	0.009011	84.5062	0.018041												0.180355				
TA-55 Pu Facility	LA114B			55 GAL	817	1.898	0.002355	22.08	0.00471												0.0471				
TA-55 Pu Facility	LA114A			85 GAL	820	2.76	0.007724	72.43389	0.015463												0.15459				
TA-55 Pu Facility	LA114A			85 GAL	829	8.29	0.008855	83.04175	0.017728												0.177229				
TA-55 Pu Facility	LA114A			85 GAL	830	4.48	0.001865	17.4889	0.003734												0.037325				
TA-55 Pu Facility	LA114A			85 GAL	833	9.88	0.045554	52.98396	5.952213												0.212188				
TA-55 Pu Facility	LA114A			85 GAL	836	4.05	0.006886	64.57656	0.013786												0.13782				
TA-55 Pu Facility	LA114A			85 GAL	839	6.82	0.031499	68.57633	3.589269		0.016557	6.958931									0.207				2.207996
TA-55 Pu Facility	LA114A			85 GAL	844	20.2	0.058826	56.69104	6.865679												0.306673				
TA-55 Pu Facility	LA114A			85 GAL	845	5.1	0.01735	52.11168	0.075807		0.011171	1.771581									0.31145				1.340604
TA-55 Pu Facility	LA114A			85 GAL	846	12.17	0.012302	115.3723	0.02463												0.24623				
TA-55 Pu Facility	LA114A			85 GAL	847	4.54	0.009372	87.89509	0.018764												0.187587				
TA-55 Pu Facility	LA114A			85 GAL	848	3.86	0.006071	56.93514	0.012155												0.121512				
TA-55 Pu Facility	LA114A			85 GAL	848	11.55	0.011481	107.6745	0.022987												0.229801				
TA-55 Pu Facility	LA114A			85 GAL	849	10.7	0.00572	53.64013	0.011451												0.11448				
TA-55 Pu Facility	LA114A			85 GAL	855	3.58	0.005937	55.67722	0.011886												0.118827				
TA-55 Pu Facility	LA114A			85 GAL	855	4.25	0.008475	79.48389	0.016969												0.169636				
TA-55 Pu Facility	LA114A			85 GAL	856	3.21	0.007252	68.01238	0.01452												0.145153				
TA-55 Pu Facility	LA114A			85 GAL	857	4.79	0.05121	45.50201	6.911472												0.212249				
TA-55 Pu Facility	LA114A			85 GAL	858	7.97	0.056537	81.43947	7.141781												0.292662				
TA-55 Pu Facility	LA114A			85 GAL	858	2.64	0.003471	32.55582	0.00695												0.069481				
TA-55 Pu Facility	LA114A			85 GAL	860	7.42	0.010711	100.4462	0.021444												0.214374				
TA-55 Pu Facility	LA114A			85 GAL	860	5.44	0.003939	36.93978	0.007886												0.078838				
TA-55 Pu Facility	LA114A			85 GAL	862	3.15	0.006048	56.71923	0.012109												0.121051				
TA-55 Pu Facility	LA114A			85 GAL	862	1.38	0.004914	46.0832	0.009838												0.098352				
TA-55 Pu Facility	LA114A			85 GAL	864	1.98	0.004857	45.54811	0.009724												0.09721				
TA-55 Pu Facility	LA114A			85 GAL	865	5.34	0.004036	37.85037	0.00808												0.080781				
TA-55 Pu Facility	LA114A			85 GAL	865	1.7	0.003783	35.47533	0.007573												0.075712				
TA-55 Pu Facility	LA114A			85 GAL	870	1.96	0.005363	50.29818	0.010738												0.107347				
TA-55 Pu Facility	LA114A			85 GAL	870	5.958	0.014354	134.6166	0.028738												0.287301				
TA-55 Pu Facility	LA114A			85 GAL	871	16.15	0.006956	65.23368	0.013926												0.139223				
TA-55 Pu Facility	LA114A			85 GAL	876	3.24	0.011314	75.66917	0.02442		0.010247	0.055157									0.18904				1.038616
TA-55 Pu Facility	LA114A			85 GAL	878	3.95	0.004958	46.49625	0.009926		0.020494	0.110314									0.099233				2.077232
TA-55 Pu Facility	LA114A			85 GAL	879	3.71	0.005288	49.59412	0.010588												0.105845				
TA-55 Pu Facility	LA114A			85 GAL	886	3.85	0.008735	81.91526	0.017488												0.174825				
TA-55 Pu Facility	LA114A			85 GAL	904	3.57	0.023795	91.03196	2.116912												0.229273				
TA-55 Pu Facility	LA114A			85 GAL	914	3.53	0.006617	62.05132	0.013247												0.132431				
TA-55 Pu Facility	LA114A			55 GAL	921	6.17	0.028426	135.2	2.114623												0.323342				
TA-55 Pu Facility	LA114A			OTHER		4.57	0.007361	69.03562	0.014738												0.147337				

Attachment H

Correction of Waste Stream Designation for Three Containers

Subject: FW: MIN04 Evaluation

From: Trey Greenwood [mailto:4dc.consulting@gmail.com]
Sent: Monday, February 02, 2015 2:49 PM
To: 'MJ Papp'
Cc: Christensen, Davis V
Subject: DR

Mike,

Please send Davis the DR moving the D001 "MIN04 containers back to the MIN02 waste stream. The state wants to make sure these are corrected before the letter gets to them.

PKG_ID	Original ID	Original LA_WS	Location	Salt Type	Waste Stream
90872	S844213	TA-55-34	WIPP 6	Nitrate	LA-MIN04-S.001
90883	S833261	TA-55-34	WIPP 6	Nitrate	LA-MIN04-S.001
90931	S863696	TA-55-34	WIPP 6	Nitrate	LA-MIN04-S.001

Trey Greenwood
Technical Specialists
575.302.6000
"In God We Trust"

Technical Specialists Disclaimer
This message is confidential and intended solely for the use of the individual(s) or entity(ies) to whom it is addressed. It may also be privileged or otherwise protected by work product immunity or other legal rules. If you have received it by mistake, please let us know by e-mail reply and delete it from your system. You may not distribute this email, its contents, or its intent to anyone outside of this distribution who cannot be shown to have a need to know.

Attachment I

Revised Inventory of LANL Nitrate Salt Drums

Inventory of Nitrate Salt-Bearing Waste Containers- Los Alamos National Laboratory

Legend

Date 3/4/2015

Parent ID	Original Parent container ID as recorded in the waste tracking database "Waste Compliance and Tracking System" (WCATS) and predecessor database systems to WCATS.
Original Waste Stream	Original Parent AK Waste Stream as recorded from generator information.
Parent EPA_CD	EPA Codes assigned to the Parent Containers prior to processing.
RemedDate	Date the container started remediation.
Rem Facility	Facility where the remediation was performed.
(Parent or Daughter) ID	Container ID as recorded in the waste tracking database "Waste Compliance and Tracking System" (WCATS). Can be a parent or daughter container.
Waste Stream	Current AK Waste Stream as recorded in CCP's AK Tracking Spreadsheet. (Parent of Daughter)
Location Category	Location of the Current Container (parent or daughter)
Current Location	Specific Location of the Current Container (Dome 231 = Parent Container in 85 gallon overpack; Dome 375 = SWBs containing a single Remediated Daughter Drum or SWB Overpack containing Nitrate and other Non Nitrate drums; RECV WCS = SWBs received at WCS containing Nitrate and other Non Nitrate Drums; RECV WIPP = received at WIPP (as either a single 55 gallon drum or in an SWB containing Nitrate and other Non Nitrate Drums)
Red and Green Highlighted	Green highlighted rows indicate containers that are proposed for removal from the suspected nitrate salt-bearing waste container inventory. Red highlights indicate newly discovered (since May 2014) suspect nitrate salt-bearing waste containers.

Un-Remediated Parents Dispositioned at WCS and WIPP

Parent ID	Original Waste Stream	Parent EPA_CD	RemedDate	Rem Facility	Parent ID	Waste Stream	Location Category	Current Location
S802853	LA-CIN01.001-Cans	D008	No Rem Required	No Rem Required	S802853	LA-CIN01.001-Cans	WCS	RECV WCS
S794448	LA-CIN01.001-Cans	D008	No Rem Required	No Rem Required	S794448	LA-CIN01.001-Cans	WIPP 6	RECV WIPP
S816357	LA-CIN01.001-Cans	D008	No Rem Required	No Rem Required	S816357	LA-CIN01.001-Cans	WIPP 6	RECV WIPP
S823125	LA-CIN01.001-Cans	D007	No Rem Required	No Rem Required	S823125	LA-CIN01.001-Cans	WIPP 6	RECV WIPP
S823126	LA-CIN01.001-Cans	D007	No Rem Required	No Rem Required	S823126	LA-CIN01.001-Cans	WIPP 6	RECV WIPP
S835376	LA-CIN01.001-Cans	D008	No Rem Required	No Rem Required	S835376	LA-CIN01.001-Cans	WIPP 6	RECV WIPP

Un-Remediated Parents at LANL

Parent ID	Original Waste Stream	Parent EPA_CD	RemedDate	Rem Facility	Parent ID	Waste Stream	Location Category	Current Location
S793724	LA-CIN01.001-Cans	D001; D002; D007; D008; D009	TBD	TBD	S793724	LA-CIN01.001-Cans	LANL	Dome 231
S801676	LA-CIN01.001-Cans	D001; D002; D007; D008; D009	TBD	TBD	S801676	LA-CIN01.001-Cans	LANL	Dome 231
S802701	LA-CIN01.001-Cans	D001; D002; D007; D008; D009	TBD	TBD	S802701	LA-MIN02-V.001	LANL	Dome 231
S802739	LA-CIN01.001-Cans	D001; D002; D007; D008; D009	TBD	TBD	S802739	LA-CIN01.001-Cans	LANL	Dome 231
S802833	LA-CIN01.001-Cans	D001; D002; D007; D008; D009	TBD	TBD	S802833	LA-CIN01.001-Cans	LANL	Dome 231
S803078	LA-CIN01.001-Cans	D001; D002; D007; D008; D009	TBD	TBD	S803078	LA-CIN01.001-Cans	LANL	Dome 231
S804948	LA-CIN01.001-Cans	D001; D002; D007; D008; D009	TBD	TBD	S804948	LA-CIN01.001-Cans	LANL	Dome 231
S804995	LA-CIN01.001-Cans	D001; D002; D007; D008; D009	TBD	TBD	S804995	LA-CIN01.001-Cans	LANL	Dome 231
S805051	LA-CIN01.001-Cans	D001; D002; D007; D008; D009	TBD	TBD	S805051	LA-CIN01.001-Cans	LANL	Dome 231

S805289	LA-CIN01.001-Cans	D001; D002; D007; D008; D009	TBD	TBD	S805289	LA-CIN01.001-Cans	LANL	Dome 231
S813385	LA-CIN01.001-Cans	D001; D002; D007; D008; D009	TBD	TBD	S813385	LA-CIN01.001-Cans	LANL	Dome 231
S813389	LA-CIN01.001-Cans	D001; D002; D007; D008; D009	TBD	TBD	S813389	LA-CIN01.001-Cans	LANL	Dome 231
S813545	LA-CIN01.001-Cans	D001; D002; D007; D008; D009	TBD	TBD	S813545	LA-CIN01.001-Cans	LANL	Dome 231
S816434	LA-CIN01.001-Cans	D001; D002; D007; D008; D009	TBD	TBD	S816434	LA-CIN01.001-Cans	LANL	Dome 231
S816810	LA-CIN01.001-Cans	D001; D002; D007; D008; D009	TBD	TBD	S816810	LA-CIN01.001-Cans	LANL	Dome 231
S818435	LA-CIN01.001-Cans	D001; D002; D007; D008; D009	TBD	TBD	S818435	LA-CIN01.001-Cans	LANL	Dome 231
S822599	LA-CIN01.001-Cans	D001; D002; D007; D008; D009	TBD	TBD	S822599	LA-CIN01.001-Cans	LANL	Dome 231
S822713	LA-CIN01.001-Cans	D001; D002; D007; D008; D009	TBD	TBD	S822713	LA-CIN01.001-Cans	LANL	Dome 231
S822844	LA-CIN01.001-Cans	D001; D002; D007; D008; D009	TBD	TBD	S822844	LA-CIN01.001-Cans	LANL	Dome 231
S823124	LA-CIN01.001-Cans	D001; D007; D008; D009	TBD	TBD	S823124	LA-CIN01.001-Cans	LANL	Dome 231
S823184	LA-CIN01.001-Cans	D001; D002; D007; D008; D009	TBD	TBD	S823184	LA-CIN01.001-Cans	LANL	Dome 231
S825878	LA-CIN01.001-Cans	D001; D007; D008; D009	TBD	TBD	S825878	LA-CIN01.001-Cans	LANL	Dome 231
S825879	LA-CIN01.001-Cans	D001; D002; D007; D008; D009	TBD	TBD	S825879	LA-CIN01.001-Cans	LANL	Dome 231
S842446	LA-CIN01.001-Cans	D001; D007; D008; D009	TBD	TBD	S842446	LA-CIN01.001-Cans	LANL	Dome 231
S844602	LA-CIN01.001-Cans	D001; D002; D007; D008; D009	TBD	TBD	S844602	LA-MIN02-V.001	LANL	Dome 231
S851415	LA-CIN01.001-Cans	D001; D002; D007; D008; D009	TBD	TBD	S851415	LA-MIN02-V.001	LANL	Dome 231
S853714	LA-CIN01.001-Cans	D001; D002; D007; D008; D009	TBD	TBD	S853714	LA-CIN01.001-Cans	LANL	Dome 231
S862888	LA-CIN01.001-Cans	D001; D002; D007; D008; D009	TBD	TBD	S862888	LA-CIN01.001-Cans	LANL	Dome 231
S864213	LA-CIN01.001-Cans	D001; D002; D007; D008; D009	TBD	TBD	S864213	LA-CIN01.001-Cans	LANL	Dome 231

Parents and their Remediated Daughters

Parent ID	Original Waste Stream	Parent EPA_CD	RemedDate	Rem Facility	Daughter ID	Waste Stream	Location Category	Current Location
S793450	LA-CIN01.001-Cans	D007; D008; D009	4/21/2014	WCRRF	69644	LA-MIN02-V.001	LANL	Dome 375
			4/21/2014	WCRRF	69598	LA-MIN02-V.001	LANL	Dome 375
S793459	LA-MHD01.001	None	6/28/2012	WCRRF	91768	MIN04-S.001	WIPP 6	RECV WIPP
					91769	MIN04-S.001	WIPP 6	RECV WIPP
S802641	LA-CIN01.001-Cans	D008	6/21/2013	WCRRF	93859	LA-CIN01.001-Cans	WIPP 6	RECV WIPP

Parent ID	Original Waste Stream	Parent EPA_CD	RemedDate	Rem Facility	Daughter ID	Waste Stream	Location Category	Current Location
			6/21/2013	WCRRF	93860	LA-CIN01.001-Cans	WIPP 6	RECV WIPP
			6/21/2013	WCRRF	93861	LA-CIN01.001-Cans	WIPP 6	RECV WIPP
S802959	LA-CIN01.001-Cans	D008	8/20/2013	WCRRF	94223	LA-CIN01.001-Cans	WIPP 6	RECV WIPP
S803613	LA-CIN01.001-Cans	D007; D008; D009	11/12/2013	WCRRF	68627	LA-MIN02-V.001	WCS	RECV WCS
			11/12/2013	WCRRF	68432	LA-MIN02-V.001	WCS	RECV WCS
S804989	LA-CIN01.001-Cans	D007; D008; D009	10/29/2013	WCRRF	68580	LA-MIN02-V.001	WCS	RECV WCS
S811613	LA-CIN01.001-Cans	D008	7/2/2013	WCRRF	93949	LA-CIN01.001-Cans	WIPP 6	RECV WIPP
S811692	LA-CIN01.001-Cans	D007; D008; D009	11/20/2013	WCRRF	68676	LA-MIN02-V.001	WCS	RECV WCS
S811734	LA-CIN01.001-Cans	D008	7/23/2013	WCRRF	94051	LA-CIN01.001-Cans	WIPP 6	RECV WIPP
			7/23/2013	WCRRF	94050	LA-CIN01.001-Cans	WIPP 6	RECV WIPP
S811812	LA-CIN01.001-Cans	D008	7/9/2013	WCRRF	93980	LA-CIN01.001-Cans	WIPP 6	RECV WIPP
			7/9/2013	WCRRF	93981	LA-CIN01.001-Cans	WIPP 6	RECV WIPP
S811834	LA-CIN01.001-Cans	D008	7/9/2013	WCRRF	93976	LA-CIN01.001-Cans	WIPP 6	RECV WIPP
S811872	LA-CIN01.001-Cans	D008	6/18/2013	WCRRF	93848	LA-CIN01.001-Cans	WIPP 6	RECV WIPP
			6/18/2013	WCRRF	93846	LA-CIN01.001-Cans	WIPP 6	RECV WIPP
			6/18/2013	WCRRF	93847	LA-CIN01.001-Cans	WIPP 6	RECV WIPP
S813223	LA-CIN01.001-Cans	D008	7/2/2013	WCRRF	93945	LA-CIN01.001-Cans	WIPP 6	RECV WIPP
			7/2/2013	WCRRF	93946	LA-CIN01.001-Cans	WIPP 6	RECV WIPP
			7/2/2013	WCRRF	93947	LA-CIN01.001-Cans	WIPP 6	RECV WIPP
S813471	LA-CIN01.001-Cans	D007; D008; D009	4/18/2014	WCRRF	69637	LA-MIN02-V.001	LANL	Dome 375
			4/18/2014	WCRRF	69641	LA-MIN02-V.001	LANL	Dome 375
			4/18/2014	WCRRF	69520	LA-MIN02-V.001	LANL	Dome 375
S813475	LA-CIN01.001-Cans	D008	8/20/2013	WCRRF	94227	LA-MHD01.001	LANL	Dome 375
S813562	LA-CIN01.001-Cans	D008	9/4/2013	WCRRF	68302	LA-CIN01.001-Cans	WIPP 6	RECV WIPP
			9/4/2013	WCRRF	68303	LA-CIN01.001-Cans	WIPP 6	RECV WIPP
S813601	LA-CIN01.001-Cans	D008	8/8/2013	WCRRF	94144	LA-CIN01.001-Cans	WIPP 6	RECV WIPP
			8/8/2013	WCRRF	94145	LA-CIN01.001-Cans	WIPP 6	RECV WIPP
			8/8/2013	WCRRF	94146	LA-CIN01.001-Cans	WIPP 6	RECV WIPP
S813620	LA-CIN01.001-Cans	D008	6/18/2013	WCRRF	93841	LA-CIN01.001-Cans	WIPP 6	RECV WIPP
			6/18/2013	WCRRF	93842	LA-CIN01.001-Cans	WIPP 6	RECV WIPP
			6/18/2013	WCRRF	93843	LA-CIN01.001-Cans	WIPP 6	RECV WIPP
			6/18/2013	WCRRF	93844	LA-CIN01.001-Cans	WIPP 6	RECV WIPP
S813676	LA-CIN01.001-Cans	D007; D008; D009	11/4/2013	WCRRF	68559	LA-MIN02-V.001	WIPP 6	RECV WIPP

Parent ID	Original Waste Stream	Parent EPA_CD	RemedDate	Rem Facility	Daughter ID	Waste Stream	Location Category	Current Location
			11/4/2013	WCRRF	68541	LA-MIN02-V.001	WIPP 7	RECV WIPP
S814859	LA-CIN01.001-Cans	D008	7/4/2013	WCRRF	93962	LA-CIN01.001-Cans	WIPP 6	RECV WIPP
			7/4/2013	WCRRF	93965	LA-CIN01.001-Cans	WIPP 6	RECV WIPP
S815176	LA-CIN01.001-Cans	D008	8/20/2013	WCRRF	94225	LA-CIN01.001-Cans	WIPP 6	RECV WIPP
S816304	LA-CIN01.001-Cans	D008	7/11/2013	WCRRF	94008	LA-CIN01.001-Cans	WIPP 6	RECV WIPP
			7/11/2013	WCRRF	94007	LA-CIN01.001-Cans	WIPP 6	RECV WIPP
S816305	LA-CIN01.001-Cans	D008	7/11/2013	WCRRF	94005	LA-CIN01.001-Cans	WIPP 6	RECV WIPP
S816342	LA-CIN01.001-Cans	D008	7/12/2013	WCRRF	94013	LA-CIN01.001-Cans	WIPP 6	RECV WIPP
			7/12/2013	WCRRF	94014	LA-CIN01.001-Cans	WIPP 6	RECV WIPP
			7/12/2013	WCRRF	94011	LA-CIN01.001-Cans	WIPP 6	RECV WIPP
			7/12/2013	WCRRF	94012	LA-CIN01.001-Cans	WIPP 6	RECV WIPP
			7/12/2013	WCRRF	94016	LA-CIN01.001-Cans	WIPP 6	RECV WIPP
S816374	LA-CIN01.001-Cans	D008	6/27/2013	WCRRF	93902	LA-CIN01.001-Cans	WIPP 6	RECV WIPP
			6/27/2013	WCRRF	93903	LA-CIN01.001-Cans	WIPP 6	RECV WIPP
			6/27/2013	WCRRF	93904	LA-CIN01.001-Cans	WIPP 6	RECV WIPP
S816394	LA-CIN01.001-Cans	D008	7/11/2013	WCRRF	94003	LA-CIN01.001-Cans	WIPP 6	RECV WIPP
S816440	LA-CIN01.001-Cans	D008	6/27/2013	WCRRF	93909	LA-CIN01.001-Cans	WIPP 6	RECV WIPP
S816469	LA-CIN01.001-Cans	D008	7/22/2013	WCRRF	94032	LA-CIN01.001-Cans	WIPP 6	RECV WIPP
			7/22/2013	WCRRF	94033	LA-CIN01.001-Cans	WIPP 6	RECV WIPP
			7/22/2013	WCRRF	94034	LA-CIN01.001-Cans	WIPP 6	RECV WIPP
S816664	LA-CIN01.001-Cans	D008	7/22/2013	WCRRF	94036	LA-CIN01.001-Cans	WIPP 6	RECV WIPP
			7/22/2013	WCRRF	94037	LA-CIN01.001-Cans	WIPP 6	RECV WIPP
S816667	LA-CIN01.001-Cans	D008	8/7/2013	WCRRF	94142	LA-CIN01.001-Cans	WIPP 6	RECV WIPP
			8/7/2013	WCRRF	94141	LA-CIN01.001-Cans	WIPP 6	RECV WIPP
S816692	LA-CIN01.001-Cans	D007; D008; D009	10/31/2013	WCRRF	68581	LA-MIN02-V.001	WIPP 7	RECV WIPP
			10/31/2013	WCRRF	68565	LA-MIN02-V.001	WIPP 6	RECV WIPP
S816768	LA-CIN01.001-Cans	D007; D008; D009	4/22/2014	WCRRF	69620	LA-MIN02-V.001	LANL	Dome 375
			4/22/2014	WCRRF	69519	LA-MIN02-V.001	LANL	Dome 375
			4/22/2014	WCRRF	69604	LA-MIN02-V.001	LANL	Dome 375
S816773	LA-CIN01.001-Cans	D008	6/22/2013	WCRRF	93869	LA-CIN01.001-Cans	WIPP 6	RECV WIPP
S816828	LA-CIN01.001-Cans	D008	6/21/2013	WCRRF	93866	LA-CIN01.001-Cans	WIPP 6	RECV WIPP
			6/21/2013	WCRRF	93867	LA-CIN01.001-Cans	WIPP 6	RECV WIPP
S816837	LA-CIN01.001-Cans	D007; D008; D009	10/30/2013	WCRRF	68578	LA-MIN02-V.001	WIPP 7	RECV WIPP

Parent ID	Original Waste Stream	Parent EPA_CD	RemedDate	Rem Facility	Daughter ID	Waste Stream	Location Category	Current Location
			10/30/2013	WCRRF	68567	LA-MHD01.001	LANL	Dome 375
S816890	LA-CIN01.001-Cans	D007; D008; D009	10/30/2013	WCRRF	68569	LA-MIN02-V.001	WIPP 6	RECV WIPP
			10/30/2013	WCRRF	68557	LA-MIN02-V.001	WIPP 6	RECV WIPP
S816900	LA-CIN01.001-Cans	D008	6/27/2013	WCRRF	93906	LA-CIN01.001-Cans	WIPP 6	RECV WIPP
			6/27/2013	WCRRF	93907	LA-CIN01.001-Cans	WIPP 6	RECV WIPP
S816915	LA-CIN01.001-Cans	D008	6/26/2013	WCRRF	93900	LA-CIN01.001-Cans	WIPP 6	RECV WIPP
S818255	LA-CIN01.001-Cans	D007; D008; D009	10/23/2013	WCRRF	68493	LA-MIN02-V.001	WIPP 6	RECV WIPP
			10/23/2013	WCRRF	68470	LA-MIN02-V.001	WIPP 6	RECV WIPP
S818354	LA-CIN01.001-Cans	D008	6/24/2013	WCRRF	93883	LA-CIN01.001-Cans	WIPP 6	RECV WIPP
			6/24/2013	WCRRF	93886	LA-CIN01.001-Cans	WIPP 6	RECV WIPP
			6/24/2013	WCRRF	93885	LA-CIN01.001-Cans	WIPP 6	RECV WIPP
			6/24/2013	WCRRF	93884	LA-CIN01.001-Cans	WIPP 6	RECV WIPP
S818370	LA-CIN01.001-Cans	D008	7/30/2013	WCRRF	94088	LA-CIN01.001-Cans	WIPP 6	RECV WIPP
			7/30/2013	WCRRF	94087	LA-CIN01.001-Cans	WIPP 6	RECV WIPP
S818382	LA-CIN01.001-Cans	D007; D008; D009	11/1/2013	WCRRF	68561	LA-MIN02-V.001	WIPP 6	RECV WIPP
			11/1/2013	WCRRF	68568	LA-MIN02-V.001	WIPP 6	RECV WIPP
S818412	LA-CIN01.001-Cans	D007; D008; D009	4/17/2014	WCRRF	69642	LA-MIN02-V.001	LANL	Dome 375
			4/17/2014	WCRRF	69618	LA-MIN02-V.001	LANL	Dome 375
S818449	LA-CIN01.001-Cans	D007; D008; D009	11/11/2013	WCRRF	68630	LA-MIN02-V.001	WIPP 7	RECV WIPP
			11/11/2013	WCRRF	68633	LA-MIN02-V.001	WIPP 6	RECV WIPP
S821203	LA-MHD01.001	D007; D008; D009	9/24/2013	WCRRF	68416	LA-MIN02-V.001	WIPP 6	RECV WIPP
			9/24/2013	WCRRF	68449	LA-MIN02-V.001	WCS	RECV WCS
S822541	LA-CIN01.001-Cans	D007	8/15/2013	WCRRF	94203	LA-CIN01.001-Cans	WIPP 6	RECV WIPP
			8/15/2013	WCRRF	94205	LA-CIN01.001-Cans	WIPP 6	RECV WIPP
			8/15/2013	WCRRF	94206	LA-CIN01.001-Cans	WIPP 6	RECV WIPP
S822542	LA-CIN01.001-Cans	D007	8/15/2013	WCRRF	94201	LA-CIN01.001-Cans	WCS	RECV WCS
			8/15/2013	WCRRF	94200	LA-CIN01.001-Cans	WIPP 6	RECV WIPP
S822679	LA-CIN01.001-Cans	D007; D008; D009	4/21/2014	WCRRF	69638	LA-MIN02-V.001	LANL	Dome 375
			4/21/2014	WCRRF	69645	LA-MIN02-V.001	LANL	Dome 375
S822838	LA-MHD01.001	None Identified by Generator	1/27/2012	WCRRF	90801	LA-MHD01.001	WIPP 6	RECV WIPP
			10/1/2012	WCRRF	92121	LA-MHD01.001	WIPP 6	RECV WIPP
			10/1/2012	WCRRF	92122	LA-MIN02-V.001	WIPP 6	RECV WIPP
			10/1/2012	WCRRF	92124	LA-MHD01.001	WIPP 6	RECV WIPP
			10/1/2012	WCRRF	92126	LA-MHD01.001	WIPP 6	RECV WIPP
			10/1/2012	WCRRF	92127	LA-MIN02-V.001	WIPP 6	RECV WIPP

Parent ID	Original Waste Stream	Parent EPA_CD	RemedDate	Rem Facility	Daughter ID	Waste Stream	Location Category	Current Location
			10/2/2012	WCRRF	92131	LA-MHD01.001	WIPP 6	RECV WIPP
			10/2/2012	WCRRF	92144	LA-MHD01.001	WIPP 6	RECV WIPP
			10/2/2012	WCRRF	92145	LA-MIN02-V.001	WIPP 6	RECV WIPP
			10/3/2012	WCRRF	92160	LA-MHD01.001	WIPP 6	RECV WIPP
			10/4/2012	WCRRF	92169	LA-MHD01.001	WIPP 6	RECV WIPP
			10/4/2012	WCRRF	92173	LA-MIN02-V.001	WIPP 6	RECV WIPP
			1/11/2013	WCRRF	92555	LA-MIN02-V.001	WIPP 6	RECV WIPP
			1/12/2013	WCRRF	92559	LA-MHD01.001	WIPP 6	RECV WIPP
			1/12/2013	WCRRF	92561	LA-MHD01.001	WIPP 6	RECV WIPP
S822876	LA-MHD01.001	D007; D008; D009	2/27/2014	WCRRF	69428	LA-MIN02-V.001	WCS	RECV WCS
			2/27/2014	WCRRF	69417	LA-MHD01.001	LANL	Dome 375
			2/27/2014	WCRRF	69422	LA-MIN02-V.001	WCS	RECV WCS
S822928	LA-MHD01.001	None	1/14/2014	WCRRF	69232	MIN04-S.001	WCS	RECV WCS
					69235	MIN04-S.001	WCS	RECV WCS
S822952	LA-MHD01.001	D007; D008; D009	11/6/2013	WCRRF	68605	LA-MIN02-V.001	WIPP 7	RECV WIPP
			11/6/2013	WCRRF	68607	LA-MIN02-V.001	WIPP 7	RECV WIPP
			11/6/2013	WCRRF	68573	LA-MIN02-V.001	WIPP 7	RECV WIPP
S823004	LA-MHD01.001	D007; D008; D009	9/26/2013	WCRRF	68455	LA-MIN02-V.001	WIPP 6	RECV WIPP
			9/26/2013	WCRRF	68412	LA-MIN02-V.001	WIPP 6	RECV WIPP
			9/26/2013	WCRRF	68459	LA-MIN02-V.001	WIPP 7	RECV WIPP
S823016	LA-CIN01.001-Cans	D007; D008; D009	10/25/2013	WCRRF	68543	LA-MIN02-V.001	WCS	RECV WCS
			10/25/2013	WCRRF	68497	LA-MIN02-V.001	WIPP 6	RECV WIPP
S823127	LA-CIN01.001-Cans	D007; D008; D009	11/5/2013	WCRRF	68611	LA-MIN02-V.001	WIPP 6	RECV WIPP
			11/5/2013	WCRRF	68613	LA-MIN02-V.001	WIPP 6	RECV WIPP
S823153	LA-CIN01.001-Cans	D007	7/23/2013	WCRRF	94040	LA-CIN01.001-Cans	WIPP 6	RECV WIPP
			7/23/2013	WCRRF	94039	LA-CIN01.001-Cans	WIPP 6	RECV WIPP
S823166	LA-MHD01.001	D007; D008; D009	12/16/2013	WCRRF	69041	LA-MIN02-V.001	WCS	RECV WCS
			12/16/2013	WCRRF	69068	LA-MIN02-V.001	WCS	RECV WCS
S823187	LA-MHD01.001	None Identified by Generator	10/25/2012	WCRRF	92246	LA-MIN02-V.001	WIPP 6	RECV WIPP
			10/25/2012	WCRRF	92245	LA-MIN02-V.001	WIPP 6	RECV WIPP
			1/22/2013	WCRRF	92669	LA-MHD01.001	LANL	Dome 375
S823194	LA-MHD01.001	None Identified by Generator	10/23/2012	WCRRF	92229	LA-MIN02-V.001	WIPP 6	RECV WIPP
			11/13/2012	WCRRF	92360	LA-MIN02-V.001	WIPP 6	RECV WIPP
S823221	LA-MHD01.001	D007; D008; D009	9/16/2013	WCRRF	68382	LA-MIN02-V.001	WIPP 6	RECV WIPP
			9/16/2013	WCRRF	68379	LA-MIN02-V.001	WIPP 6	RECV WIPP
S823229	LA-MHD01.001	D007; D008; D009	2/28/2014	WCRRF	69402	LA-MIN02-V.001	WCS	RECV WCS
			2/28/2014	WCRRF	69445	LA-MIN02-V.001	LANL	Dome 375

Parent ID	Original Waste Stream	Parent EPA_CD	RemedDate	Rem Facility	Daughter ID	Waste Stream	Location Category	Current Location
S823276	LA-MHD01.001	D007; D008; D009	1/16/2014	WCRRF	69217	LA-MIN02-V.001	WCS	RECV WCS
			1/16/2014	WCRRF	69091	LA-MIN02-V.001	WCS	RECV WCS
			1/16/2014	WCRRF	69191	LA-MIN02-V.001	WCS	RECV WCS
S824181	LA-MHD01.001	None Identified by Generator	4/19/2013	WCRRF	93515	LA-MIN02-V.001	WIPP 6	RECV WIPP
			4/19/2013	WCRRF	93516	LA-MIN02-V.001	WIPP 6	RECV WIPP
S824184	LA-MHD01.001	D007; D008; D009	11/12/2013	WCRRF	68624	LA-MIN02-V.001	LANL	Dome 375
			11/12/2013	WCRRF	68620	LA-MIN02-V.001	WCS	RECV WCS
			11/12/2013	WCRRF	68628	LA-MIN02-V.001	WCS	RECV WCS
S824187	LA-MHD01.001	D007; D008; D009	4/28/2013	WCRRF	93581	LA-MIN02-V.001	WIPP 6	RECV WIPP
			4/28/2013	WCRRF	93582	LA-MIN02-V.001	WIPP 6	RECV WIPP
S824188	LA-MHD01.001	D007; D008; D009	4/26/2013	WCRRF	93573	LA-MIN02-V.001	WIPP 6	RECV WIPP
			4/26/2013	WCRRF	93571	LA-MIN02-V.001	WIPP 6	RECV WIPP
			4/26/2013	WCRRF	93572	LA-MIN02-V.001	WIPP 6	RECV WIPP
			4/26/2013	WCRRF	93568	LA-MIN02-V.001	WIPP 6	RECV WIPP
			4/26/2013	WCRRF	93574	LA-MIN02-V.001	WIPP 6	RECV WIPP
S824208	LA-MHD01.001	D007; D008; D009	10/31/2013	WCRRF	68422	LA-MIN02-V.001	WIPP 7	RECV WIPP
			10/31/2013	WCRRF	68423	LA-MIN02-V.001	WIPP 7	RECV WIPP
			10/31/2013	WCRRF	68424	LA-MIN02-V.001	WIPP 7	RECV WIPP
			10/31/2013	WCRRF	68425	LA-MIN02-V.001	WCS	RECV WCS
			10/31/2013	WCRRF	68558	LA-MIN02-V.001	WIPP 6	RECV WIPP
			10/31/2013	WCRRF	68560	LA-MIN02-V.001	WIPP 6	RECV WIPP
S824468	LA-CIN01.001-Cans	D007	7/25/2013	WCRRF	94074	LA-CIN01.001-Cans	WIPP 6	RECV WIPP
			7/25/2013	WCRRF	94075	LA-CIN01.001-Cans	WIPP 6	RECV WIPP
			7/25/2013	WCRRF	94076	LA-CIN01.001-Cans	WIPP 6	RECV WIPP
S824508	LA-MHD01.001	D007; D008; D009	5/3/2013	WCRRF	93610	LA-MIN02-V.001	WIPP 6	RECV WIPP
			5/3/2013	WCRRF	93609	LA-MIN02-V.001	WIPP 6	RECV WIPP
			5/3/2013	WCRRF	93611	LA-MIN02-V.001	WIPP 6	RECV WIPP
S824541	LA-MHD01.001	D007; D008; D009	5/2/2013	WCRRF	93605	LA-MIN02-V.001	LANL	Dome 375
			5/2/2013	WCRRF	93606	LA-MIN02-V.001	WIPP 6	RECV WIPP
			5/2/2013	WCRRF	93607	LA-MIN02-V.001	WIPP 6	RECV WIPP
S824551	LA-MHD01.001	None Identified by Generator	1/5/2012	WCRRF	90715	LA-MHD01.001	WIPP 6	RECV WIPP
			12/17/2012	WCRRF	92468	LA-MHD01.001	WIPP 6	RECV WIPP
			12/17/2012	WCRRF	92469	LA-MIN02-V.001	WIPP 6	RECV WIPP
			12/17/2012	WCRRF	92470	LA-MIN02-V.001	WIPP 6	RECV WIPP
			12/18/2012	WCRRF	92476	LA-MHD01.001	WIPP 6	RECV WIPP
			12/18/2012	WCRRF	92477	LA-MIN02-V.001	WIPP 6	RECV WIPP
			12/18/2012	WCRRF	92479	LA-MHD01.001	WIPP 6	RECV WIPP
			12/18/2012	WCRRF	92481	LA-MHD01.001	WIPP 6	RECV WIPP
			12/18/2012	WCRRF	92482	LA-MIN02-V.001	WIPP 6	RECV WIPP

Parent ID	Original Waste Stream	Parent EPA_CD	RemedDate	Rem Facility	Daughter ID	Waste Stream	Location Category	Current Location
			12/18/2012	WCRRF	92484	LA-MHD01.001	WIPP 6	RECV WIPP
			12/18/2012	WCRRF	92488	LA-MHD01.001	WIPP 6	RECV WIPP
			12/18/2012	WCRRF	92489	LA-MIN02-V.001	WIPP 6	RECV WIPP
			12/19/2012	WCRRF	92492	LA-MHD01.001	WIPP 6	RECV WIPP
			12/19/2012	WCRRF	92494	LA-MHD01.001	WIPP 6	RECV WIPP
			12/19/2012	WCRRF	92495	LA-MIN02-V.001	WIPP 6	RECV WIPP
			12/19/2012	WCRRF	92496	LA-MIN02-V.001	WIPP 6	RECV WIPP
S824660	LA-MHD01.001	D007; D008; D009	4/30/2013	WCRRF	93594	LA-MIN02-V.001	WIPP 6	RECV WIPP
			4/30/2013	WCRRF	93593	LA-MIN02-V.001	WIPP 6	RECV WIPP
			4/30/2013	WCRRF	93595	LA-MIN02-V.001	WIPP 6	RECV WIPP
S824967	LA-MHD01.001	D007; D008; D009	10/3/2013	WCRRF	68503	LA-MIN02-V.001	WIPP 6	RECV WIPP
			10/3/2013	WCRRF	68498	LA-MIN02-V.001	WIPP 6	RECV WIPP
S825020	LA-MHD01.001	D007; D008; D009	9/13/2013	WCRRF	68332	LA-MIN02-V.001	WIPP 6	RECV WIPP
			9/13/2013	WCRRF	68323	LA-MIN02-V.001	WIPP 6	RECV WIPP
			9/13/2013	WCRRF	68347	LA-MIN02-V.001	WCS	RECV WCS
			9/13/2013	WCRRF	68349	LA-MIN02-V.001	WIPP 6	RECV WIPP
S825021	LA-MHD01.001	D007; D008; D009	9/27/2013	WCRRF	68462	LA-MIN02-V.001	WIPP 6	RECV WIPP
			9/27/2013	WCRRF	68436	LA-MIN02-V.001	WIPP 6	RECV WIPP
			9/27/2013	WCRRF	68398	LA-MIN02-V.001	WIPP 6	RECV WIPP
			9/27/2013	WCRRF	68463	LA-MIN02-V.001	WIPP 6	RECV WIPP
S825639	LA-MHD01.001	None Identified by Generator	1/11/2012	WCRRF	90752	LA-MHD01.001	WIPP 6	RECV WIPP
			10/2/2012	WCRRF	92136	LA-MIN02-V.001	WIPP 6	RECV WIPP
			10/3/2012	WCRRF	92154	LA-MHD01.001	WIPP 6	RECV WIPP
			10/3/2012	WCRRF	92158	LA-MHD01.001	WIPP 6	RECV WIPP
			10/3/2012	WCRRF	92162	LA-MIN02-V.001	WIPP 6	RECV WIPP
			1/9/2013	WCRRF	92540	LA-MIN02-V.001	WIPP 6	RECV WIPP
			1/11/2013	WCRRF	92557	LA-MIN02-V.001	WIPP 6	RECV WIPP
S825664	LA-MHD01.001	D007; D008; D009	3/18/2014	WCRRF	69568	LA-MHD01.001	LANL	Dome 375
S825730	LA-MHD01.001	D007; D008; D009	10/30/2013	WCRRF	68564	LA-MIN02-V.001	WIPP 6	RECV WIPP
			10/30/2013	WCRRF	68576	LA-MIN02-V.001	WIPP 7	RECV WIPP
S825810	LA-MHD01.001	D007; D008; D009	11/12/2013	WCRRF	68433	LA-MIN02-V.001	WCS	RECV WCS
			11/12/2013	WCRRF	68618	LA-MIN02-V.001	WIPP 7	RECV WIPP
			11/12/2013	WCRRF	68619	LA-MIN02-V.001	WCS	RECV WCS
			11/12/2013	WCRRF	68631	LA-MIN02-V.001	LANL	Dome 375
			11/12/2013	WCRRF	68638	LA-MHD01.001	LANL	Dome 375
S825902	LA-MHD01.001	D007; D008; D009	10/29/2013	WCRRF	68395	LA-MIN02-V.001	WIPP 7	RECV WIPP
			10/29/2013	WCRRF	68428	LA-MIN02-V.001	WCS	RECV WCS
			10/29/2013	WCRRF	68512	LA-MIN02-V.001	WIPP 7	RECV WIPP
			10/29/2013	WCRRF	68575	LA-MIN02-V.001	WIPP 6	RECV WIPP

Parent ID	Original Waste Stream	Parent EPA_CD	RemedDate	Rem Facility	Daughter ID	Waste Stream	Location Category	Current Location
S832040	LA-MHD01.001	None Identified by Generator	2/2/2012	WCRRF	90840	LA-MHD01.001	WIPP 6	RECV WIPP
			10/2/2012	WCRRF	92139	LA-MHD01.001	WIPP 6	RECV WIPP
			10/2/2012	WCRRF	92140	LA-MIN02-V.001	WIPP 6	RECV WIPP
			10/9/2012	WCRRF	92190	LA-MHD01.001	WIPP 6	RECV WIPP
			10/9/2012	WCRRF	92186	LA-MHD01.001	WIPP 6	RECV WIPP
S832140	LA-MHD01.001	D007; D008; D009	9/5/2013	WCRRF	68304	LA-MIN02-V.001	WIPP 6	RECV WIPP
			9/5/2013	WCRRF	68309	LA-MIN02-V.001	WIPP 6	RECV WIPP
			9/5/2013	WCRRF	68324	LA-MIN02-V.001	WIPP 6	RECV WIPP
S832141	LA-MHD01.001	D007; D008; D009	4/29/2013	WCRRF	93589	LA-MIN02-V.001	WIPP 6	RECV WIPP
			4/29/2013	WCRRF	93588	LA-MIN02-V.001	WIPP 6	RECV WIPP
			4/29/2013	WCRRF	93590	LA-MIN02-V.001	WIPP 6	RECV WIPP
S832143	LA-MHD01.001	D007; D008; D009	9/5/2013	WCRRF	68322	LA-MIN02-V.001	WIPP 6	RECV WIPP
			9/5/2013	WCRRF	68325	LA-MIN02-V.001	WCS	RECV WCS
S832144	LA-MHD01.001	D007; D008; D009	11/14/2013	WCRRF	68651	LA-MIN02-V.001	WIPP 6	RECV WIPP
			11/14/2013	WCRRF	68508	LA-MIN02-V.001	WCS	RECV WCS
			11/14/2013	WCRRF	68626	LA-MIN02-V.001	WIPP 7	RECV WIPP
S832145	LA-MHD01.001	D007; D008; D009	9/9/2013	WCRRF	68312	LA-MIN02-V.001	WIPP 6	RECV WIPP
			9/9/2013	WCRRF	68329	LA-MIN02-V.001	WIPP 6	RECV WIPP
S832146	LA-CIN01.001-Cans	D007	8/16/2013	WCRRF	94208	LA-CIN01.001-Cans	WIPP 6	RECV WIPP
			8/16/2013	WCRRF	94209	LA-CIN01.001-Cans	WIPP 6	RECV WIPP
			8/16/2013	WCRRF	94212	LA-CIN01.001-Cans	WIPP 6	RECV WIPP
			8/16/2013	WCRRF	94210	LA-CIN01.001-Cans	WIPP 6	RECV WIPP
			8/16/2013	WCRRF	94211	LA-CIN01.001-Cans	WCS	RECV WCS
S832147	LA-MHD01.001	None Identified by Generator	10/17/2012	WCRRF	92210	LA-MIN02-V.001	WIPP 6	RECV WIPP
			10/17/2012	WCRRF	92211	LA-MIN02-V.001	WIPP 6	RECV WIPP
			10/17/2012	WCRRF	92212	LA-MIN02-V.001	WIPP 6	RECV WIPP
			10/17/2012	WCRRF	92213	LA-MIN02-V.001	WIPP 6	RECV WIPP
			12/18/2012	WCRRF	92486	LA-MHD01.001	WIPP 6	RECV WIPP
S832148	LA-MHD01.001	D007; D008; D009	3/17/2014	WCRRF	69555	LA-MIN02-V.001	WCS	RECV WCS
			3/17/2014	WCRRF	69559	LA-MIN02-V.001	LANL	Dome 375
S832149	LA-MHD01.001	None Identified by Generator	2/2/2012	WCRRF	90845	LA-MHD01.001	WIPP 6	RECV WIPP
			10/9/2012	WCRRF	92181	LA-MHD01.001	WIPP 6	RECV WIPP
			11/1/2012	WCRRF	92290	LA-MIN02-V.001	WIPP 6	RECV WIPP
			11/1/2012	WCRRF	92294	LA-MIN02-V.001	WIPP 6	RECV WIPP
			1/13/2013	WCRRF	92572	LA-MIN02-V.001	WIPP 6	RECV WIPP
			1/13/2013	WCRRF	92574	LA-MIN02-V.001	WIPP 6	RECV WIPP
			1/13/2013	WCRRF	92578	LA-MIN02-V.001	WIPP 6	RECV WIPP
S832150	LA-MHD01.001	D007; D008; D009	11/18/2013	WCRRF	68668	LA-MIN02-V.001	WIPP 7	RECV WIPP
			11/18/2013	WCRRF	68670	LA-MIN02-V.001	WIPP 7	RECV WIPP

Parent ID	Original Waste Stream	Parent EPA_CD	RemedDate	Rem Facility	Daughter ID	Waste Stream	Location Category	Current Location
S832155	LA-MHD01.001	None Identified by Generator	10/23/2012	WCRRF	92237	LA-MIN02-V.001	WIPP 6	RECV WIPP
			11/13/2012	WCRRF	92362	LA-MIN02-V.001	WIPP 6	RECV WIPP
			1/22/2013	WCRRF	92665	LA-MIN02-V.001	WIPP 6	RECV WIPP
S832156	LA-MHD01.001	None Identified by Generator	2/1/2012	WCRRF	90835	LA-MHD01.001	WIPP 6	RECV WIPP
			11/8/2012	WCRRF	92347	LA-MIN02-V.001	WIPP 6	RECV WIPP
			1/13/2013	WCRRF	92570	LA-MIN02-V.001	WIPP 6	RECV WIPP
			1/13/2013	WCRRF	92576	LA-MIN02-V.001	WIPP 6	RECV WIPP
S832241	LA-MHD01.001	D007; D008; D009	5/1/2013	WCRRF	93601	LA-MIN02-V.001	WIPP 6	RECV WIPP
			5/1/2013	WCRRF	93602	LA-MIN02-V.001	WIPP 6	RECV WIPP
			5/1/2013	WCRRF	93603	LA-MIN02-V.001	WIPP 6	RECV WIPP
S832320	LA-MHD01.001	D007; D008; D009	10/30/2013	WCRRF	68562	LA-MIN02-V.001	WIPP 6	RECV WIPP
			10/30/2013	WCRRF	68563	LA-MIN02-V.001	WIPP 6	RECV WIPP
			10/30/2013	WCRRF	68429	LA-MIN02-V.001	WCS	RECV WCS
S832340	LA-MHD01.001	None Identified by Generator	1/4/2012	WCRRF	90712	LA-MHD01.001	WIPP 6	RECV WIPP
			12/13/2012	WCRRF	92463	LA-MHD01.001	WIPP 6	RECV WIPP
S832448	LA-MHD01.001	None Identified by Generator	1/30/2012	WCRRF	90814	LA-MHD01.001	WIPP 6	RECV WIPP
			10/3/2012	WCRRF	92150	LA-MHD01.001	WIPP 6	RECV WIPP
			10/3/2012	WCRRF	92156	LA-MIN02-V.001	WIPP 6	RECV WIPP
			10/4/2012	WCRRF	92164	LA-MHD01.001	WIPP 6	RECV WIPP
			10/4/2012	WCRRF	92171	LA-MIN02-V.001	WIPP 6	RECV WIPP
			1/12/2013	WCRRF	92563	LA-MHD01.001	WIPP 6	RECV WIPP
			1/12/2013	WCRRF	92565	LA-MIN02-V.001	WIPP 6	RECV WIPP
			1/12/2013	WCRRF	92567	LA-MIN02-V.001	WIPP 6	RECV WIPP
S832464	LA-MHD01.001	None Identified by Generator	10/2/2012	WCRRF	92142	LA-MHD01.001	WIPP 6	RECV WIPP
			10/18/2012	WCRRF	92215	LA-MIN02-V.001	WIPP 6	RECV WIPP
			10/18/2012	WCRRF	92216	LA-MIN02-V.001	WIPP 6	RECV WIPP
			10/18/2012	WCRRF	92217	LA-MIN02-V.001	WIPP 6	RECV WIPP
			11/1/2012	WCRRF	92296	LA-MIN02-V.001	WIPP 6	RECV WIPP
			11/8/2012	WCRRF	92339	LA-MHD01.001	WIPP 6	RECV WIPP
			11/8/2012	WCRRF	92341	LA-MHD01.001	WIPP 6	RECV WIPP
			11/8/2012	WCRRF	92345	LA-MIN02-V.001	WIPP 6	RECV WIPP
S832499	LA-MHD01.001	D007; D008; D009	11/7/2013	WCRRF	68635	LA-MIN02-V.001	WIPP 7	RECV WIPP
			11/7/2013	WCRRF	68636	LA-MIN02-V.001	WIPP 7	RECV WIPP
S833037	LA-MHD01.001	D007; D008; D009	9/25/2013	WCRRF	68469	LA-MIN02-V.001	WIPP 6	RECV WIPP
			9/25/2013	WCRRF	68400	LA-MIN02-V.001	WIPP 6	RECV WIPP
			9/25/2013	WCRRF	68458	LA-MIN02-V.001	WIPP 6	RECV WIPP
S833261	LA-MHD01.001	None Identified by Generator	2/8/2012	WCRRF	90883	LA-MIN02-S.001	WIPP 6	RECV WIPP
			11/13/2012	WCRRF	92355	LA-MHD01.001	WIPP 6	RECV WIPP
			1/23/2013	WCRRF	92671	LA-MHD01.001	WIPP 6	RECV WIPP

Parent ID	Original Waste Stream	Parent EPA_CD	RemedDate	Rem Facility	Daughter ID	Waste Stream	Location Category	Current Location
			1/23/2013	WCRRF	92672	LA-MIN02-V.001	WIPP 6	RECV WIPP
			1/24/2013	WCRRF	92682	LA-MIN02-V.001	WIPP 6	RECV WIPP
S833409	LA-CIN01.001-Cans	D007; D008; D009	11/7/2013	WCRRF	68637	LA-MIN02-V.001	WIPP 6	RECV WIPP
			11/7/2013	WCRRF	68606	LA-MIN02-V.001	WIPP 6	RECV WIPP
			11/7/2013	WCRRF	68584	LA-MIN02-V.001	WCS	RECV WCS
S833481	LA-MHD01.001	D007; D008; D009	11/8/2013	WCRRF	68634	LA-MIN02-V.001	WIPP 6	RECV WIPP
			11/8/2013	WCRRF	68582	LA-MIN02-V.001	WIPP 7	RECV WIPP
			11/8/2013	WCRRF	68617	LA-MIN02-V.001	WCS	RECV WCS
			11/8/2013	WCRRF	68632	LA-MIN02-V.001	WCS	RECV WCS
S833846	LA-MHD01.001	D007; D008; D009	11/13/2013	WCRRF	68650	LA-MIN02-V.001	WIPP 6	RECV WIPP
			11/13/2013	WCRRF	68430	LA-MIN02-V.001	LANL	Dome 375
			11/13/2013	WCRRF	68431	LA-MIN02-V.001	WCS	RECV WCS
			11/13/2013	WCRRF	68653	LA-MIN02-V.001	WIPP 7	RECV WIPP
S833937	LA-MHD01.001	D007; D008; D009	3/4/2013	WCRRF	93150	LA-MIN02-V.001	WIPP 6	RECV WIPP
			3/4/2013	WCRRF	93153	LA-MHD01.001	WIPP 6	RECV WIPP
			3/4/2013	WCRRF	93154	LA-MIN02-V.001	WIPP 6	RECV WIPP
			3/4/2013	WCRRF	93155	LA-MIN02-V.001	WIPP 6	RECV WIPP
			3/4/2013	WCRRF	93156	LA-MIN02-V.001	WIPP 6	RECV WIPP
S834406	LA-MHD01.001	D007; D008; D009	2/14/2013	WCRRF	92933	LA-MIN02-V.001	WIPP 6	RECV WIPP
			2/14/2013	WCRRF	92932	LA-MIN02-V.001	WIPP 6	RECV WIPP
			2/14/2013	WCRRF	92934	LA-MIN02-V.001	WIPP 6	RECV WIPP
			2/14/2013	WCRRF	92935	LA-MIN02-V.001	WIPP 6	RECV WIPP
			2/14/2013	WCRRF	92936	LA-MIN02-V.001	WIPP 6	RECV WIPP
			2/14/2013	WCRRF	92937	LA-MIN02-V.001	WIPP 6	RECV WIPP
			2/14/2013	WCRRF	92938	LA-MIN02-V.001	WIPP 6	RECV WIPP
			2/14/2013	WCRRF	92939	LA-MIN02-V.001	WIPP 6	RECV WIPP
			2/14/2013	WCRRF	92940	LA-MIN02-V.001	WIPP 6	RECV WIPP
S834539	LA-MHD01.001	None Identified by Generator	10/2/2012	WCRRF	92133	LA-MHD01.001	WIPP 6	RECV WIPP
			10/2/2012	WCRRF	92134	LA-MIN02-V.001	WIPP 6	RECV WIPP
			10/9/2012	WCRRF	92183	LA-MHD01.001	WIPP 6	RECV WIPP
			10/9/2012	WCRRF	92184	LA-MHD01.001	WIPP 6	RECV WIPP
			10/9/2012	WCRRF	92188	LA-MHD01.001	WIPP 6	RECV WIPP
			10/11/2012	WCRRF	92195	LA-MHD01.001	WIPP 6	RECV WIPP
			10/11/2012	WCRRF	92197	LA-MHD01.001	WIPP 6	RECV WIPP
			11/1/2012	WCRRF	92292	LA-MIN02-V.001	WIPP 6	RECV WIPP
			4/12/2013	WCRRF	93465	LA-MHD01.001	WIPP 6	RECV WIPP
S834633	LA-MHD01.001	D007; D008; D009	2/25/2013	WCRRF	93080	LA-MHD01.001	WIPP 6	RECV WIPP
			2/25/2013	WCRRF	93081	LA-MHD01.001	WIPP 6	RECV WIPP
			2/25/2013	WCRRF	93082	LA-MIN02-V.001	WIPP 6	RECV WIPP
			2/25/2013	WCRRF	93083	LA-MIN02-V.001	WIPP 6	RECV WIPP
			2/25/2013	WCRRF	93084	LA-MIN02-V.001	WIPP 6	RECV WIPP
			2/25/2013	WCRRF	93085	LA-MIN02-V.001	WIPP 6	RECV WIPP

Parent ID	Original Waste Stream	Parent EPA_CD	RemedDate	Rem Facility	Daughter ID	Waste Stream	Location Category	Current Location
			2/25/2013	WCRRF	93086	LA-MIN02-V.001	WIPP 6	RECV WIPP
			2/25/2013	WCRRF	93087	LA-MIN02-V.001	WIPP 6	RECV WIPP
			2/25/2013	WCRRF	93088	LA-MIN02-V.001	WIPP 6	RECV WIPP
			2/25/2013	WCRRF	93089	LA-MIN02-V.001	WIPP 6	RECV WIPP
S835283	LA-MHD01.001	D007; D008; D009	9/17/2013	WCRRF	68317	LA-MIN02-V.001	WIPP 6	RECV WIPP
			9/17/2013	WCRRF	68348	LA-MIN02-V.001	WIPP 6	RECV WIPP
			9/17/2013	WCRRF	68350	LA-MIN02-V.001	WCS	RECV WCS
			9/17/2013	WCRRF	68377	LA-MIN02-V.001	WIPP 6	RECV WIPP
			9/17/2013	WCRRF	68389	LA-MIN02-V.001	WIPP 6	RECV WIPP
			9/17/2013	WCRRF	68390	LA-MIN02-V.001	WIPP 6	RECV WIPP
			9/17/2013	WCRRF	68392	LA-MIN02-V.001	WIPP 6	RECV WIPP
			9/17/2013	WCRRF	68404	LA-MIN02-V.001	WIPP 6	RECV WIPP
S835372	LA-CIN01.001-Cans	D008	7/26/2013	WCRRF	94079	LA-CIN01.001-Cans	WIPP 6	RECV WIPP
			7/26/2013	WCRRF	94078	LA-CIN01.001-Cans	WIPP 6	RECV WIPP
S841239	LA-MHD01.001	D007; D008; D009	1/9/2014	WCRRF	69162	LA-MIN02-V.001	WCS	RECV WCS
			1/9/2014	WCRRF	69180	LA-MIN02-V.001	WCS	RECV WCS
S841240	LA-MHD01.001	D007; D008; D009	9/18/2013	WCRRF	68337	LA-MIN02-V.001	WIPP 6	RECV WIPP
			9/18/2013	WCRRF	68387	LA-MIN02-V.001	WIPP 6	RECV WIPP
S841251	LA-MHD01.001	D007; D008; D009	1/26/2014	WCRRF	69298	LA-MIN02-V.001	LANL	Dome 375
			1/26/2014	WCRRF	69280	LA-MIN02-V.001	LANL	Dome 375
S841292	LA-MHD01.001	D007; D008; D009	9/30/2013	WCRRF	68484	LA-MIN02-V.001	WIPP 6	RECV WIPP
			9/30/2013	WCRRF	68473	LA-MIN02-V.001	WIPP 6	RECV WIPP
S841314	LA-MHD01.001	D007; D008; D009	9/25/2013	WCRRF	68411	LA-MIN02-V.001	WIPP 6	RECV WIPP
			9/25/2013	WCRRF	68414	LA-MIN02-V.001	WIPP 6	RECV WIPP
S841320	LA-MHD01.001	D007; D008; D009	9/26/2013	WCRRF	68468	LA-MIN02-V.001	WIPP 6	RECV WIPP
			9/26/2013	WCRRF	68394	LA-MIN02-V.001	WIPP 7	RECV WIPP
			9/26/2013	WCRRF	68467	LA-MIN02-V.001	WIPP 6	RECV WIPP
S841627	LA-CIN01.001-Cans	D007; D008; D009	4/24/2014	WCRRF	69616	LA-MIN02-V.001	LANL	Dome 375
			4/24/2014	WCRRF	69553	LA-MIN02-V.001	LANL	Dome 375
S842181	LA-MHD01.001	D007; D008; D009	11/5/2013	WCRRF	68540	LA-MHD01.001	LANL	Dome 375
			11/5/2013	WCRRF	68552	LA-MIN02-V.001	WIPP 6	RECV WIPP
			11/5/2013	WCRRF	68553	LA-MHD01.001	LANL	Dome 375
			11/5/2013	WCRRF	68577	LA-MIN02-V.001	WIPP 7	RECV WIPP
			11/5/2013	WCRRF	68583	LA-MIN02-V.001	WCS	RECV WCS
S842213	LA-MHD01.001	D007; D008; D009	9/9/2013	WCRRF	68315	LA-MIN02-V.001	WCS	RECV WCS
			9/9/2013	WCRRF	68339	LA-MIN02-V.001	WIPP 6	RECV WIPP
S842234	LA-MHD01.001	D007; D008; D009	9/26/2013	WCRRF	68465	LA-MIN02-V.001	WIPP 6	RECV WIPP

Parent ID	Original Waste Stream	Parent EPA_CD	RemedDate	Rem Facility	Daughter ID	Waste Stream	Location Category	Current Location
			9/26/2013	WCRRF	68466	LA-MIN02-V.001	WIPP 6	RECV WIPP
			9/26/2013	WCRRF	68435	LA-MIN02-V.001	WIPP 6	RECV WIPP
S842463	LA-MHD01.001	D007; D008; D009	9/19/2013	WCRRF	68380	LA-MIN02-V.001	WIPP 6	RECV WIPP
			9/19/2013	WCRRF	68396	LA-MHD01.001	WCS	RECV WCS
			9/19/2013	WCRRF	68408	LA-MHD01.001	LANL	Dome 375
S842526	LA-MHD01.001	D007; D008; D009	12/15/2013	WCRRF	69060	LA-MIN02-V.001	WCS	RECV WCS
			12/15/2013	WCRRF	68509	LA-MIN02-V.001	WCS	RECV WCS
			12/15/2013	WCRRF	69067	LA-MIN02-V.001	WCS	RECV WCS
S842528	LA-MHD01.001	D007; D008; D009	8/8/2013	WCRRF	94151	LA-MIN02-V.001	WIPP 6	RECV WIPP
			8/8/2013	WCRRF	94152	LA-MIN02-V.001	WIPP 7	RECV WIPP
S843528	LA-MHD01.001	D007; D008; D009	10/2/2013	WCRRF	68504	LA-MIN02-V.001	WIPP 6	RECV WIPP
			10/2/2013	WCRRF	68500	LA-MIN02-V.001	WIPP 6	RECV WIPP
S843593	LA-CIN01.001-Cans	D007; D008; D009	11/12/2013	WCRRF	68547	LA-MIN02-V.001	WIPP 6	RECV WIPP
			11/12/2013	WCRRF	68551	LA-MIN02-V.001	WIPP 6	RECV WIPP
S843594	LA-CIN01.001-Cans	D007; D008; D009	10/28/2013	WCRRF	68570	LA-MIN02-V.001	WIPP 6	RECV WIPP
			10/28/2013	WCRRF	68566	LA-MIN02-V.001	WIPP 6	RECV WIPP
S843672	LA-CIN01.001-Cans	D007; D008; D009	4/22/2014	WCRRF	69630	LA-MIN02-V.001	LANL	Dome 375
			4/22/2014	WCRRF	69636	LA-MIN02-V.001	LANL	Dome 375
S843673	LA-CIN01.001-Cans	D007; D008; D009	4/17/2014	WCRRF	69615	LA-MIN02-V.001	LANL	Dome 375
			4/17/2014	WCRRF	69639	LA-MIN02-V.001	LANL	Dome 375
S843962	LA-MHD01.001	None Identified by Generator	10/18/2012	WCRRF	92219	LA-MIN02-V.001	WIPP 6	RECV WIPP
			10/18/2012	WCRRF	92220	LA-MIN02-V.001	WIPP 6	RECV WIPP
			10/18/2012	WCRRF	92221	LA-MIN02-V.001	WIPP 6	RECV WIPP
			1/13/2013	WCRRF	92580	LA-MIN02-V.001	WIPP 6	RECV WIPP
S844213	LA-MHD01.001	None Identified by Generator	2/7/2012	WCRRF	90872	LA-MIN02-S.001	WIPP 6	RECV WIPP
			10/2/2012	WCRRF	92147	LA-MHD01.001	WIPP 6	RECV WIPP
			10/2/2012	WCRRF	92148	LA-MIN02-V.001	WIPP 6	RECV WIPP
			10/15/2012	WCRRF	92202	LA-MHD01.001	WIPP 6	RECV WIPP
			11/8/2012	WCRRF	92343	LA-MHD01.001	WIPP 6	RECV WIPP
			11/8/2012	WCRRF	92349	LA-MHD01.001	WIPP 6	RECV WIPP
S844215	LA-MHD01.001	D007; D008; D009	1/10/2014	WCRRF	69097	LA-MIN02-V.001	WCS	RECV WCS
			1/10/2014	WCRRF	69085	LA-MIN02-V.001	WCS	RECV WCS
S844253	LA-MHD01.001	D007; D008; D009	1/17/2014	WCRRF	69226	LA-MIN02-V.001	WCS	RECV WCS
			1/17/2014	WCRRF	69189	LA-MIN02-V.001	WCS	RECV WCS
			1/17/2014	WCRRF	69216	LA-MIN02-V.001	WCS	RECV WCS
S844573	LA-MHD01.001	D007; D008; D009	9/18/2013	WCRRF	68386	LA-MIN02-V.001	WIPP 6	RECV WIPP

Parent ID	Original Waste Stream	Parent EPA_CD	RemedDate	Rem Facility	Daughter ID	Waste Stream	Location Category	Current Location
S844684	LA-MHD01.001	D007; D008; D009	12/23/2013	WCRRF	69102	LA-MIN02-V.001	WCS	RECV WCS
			12/23/2013	WCRRF	69073	LA-MIN02-V.001	WCS	RECV WCS
			12/23/2013	WCRRF	69077	LA-MIN02-V.001	WCS	RECV WCS
			12/23/2013	WCRRF	69154	LA-MIN02-V.001	WCS	RECV WCS
S844689	LA-MHD01.001	D007; D008; D009	11/14/2013	WCRRF	68649	LA-MIN02-V.001	WIPP 7	RECV WIPP
			11/14/2013	WCRRF	68647	LA-MIN02-V.001	WIPP 7	RECV WIPP
S845031	LA-MHD01.001	D007; D008; D009	9/6/2013	WCRRF	68314	LA-MIN02-V.001	WCS	RECV WCS
			9/6/2013	WCRRF	68311	LA-MIN02-V.001	WCS	RECV WCS
			9/6/2013	WCRRF	68313	LA-MIN02-V.001	WCS	RECV WCS
			9/6/2013	WCRRF	68342	LA-MIN02-V.001	WCS	RECV WCS
S845072	LA-MHD01.001	D007; D008; D009	11/15/2013	WCRRF	68610	LA-MIN02-V.001	WIPP 6	RECV WIPP
			11/15/2013	WCRRF	68666	LA-MIN02-V.001	WIPP 7	RECV WIPP
S845104	LA-MHD01.001	D007; D008; D009	9/20/2013	WCRRF	68374	LA-MIN02-V.001	WIPP 6	RECV WIPP
S845201	LA-MHD01.001	D007; D008; D009	10/24/2012	WCRRF	92241	LA-MIN02-V.001	WIPP 6	RECV WIPP
			1/22/2013	WCRRF	92667	LA-MIN02-V.001	WIPP 6	RECV WIPP
S845338	LA-MHD01.001	D007; D008; D009	10/2/2013	WCRRF	68495	LA-MIN02-V.001	WIPP 6	RECV WIPP
			10/2/2013	WCRRF	68496	LA-MIN02-V.001	WIPP 6	RECV WIPP
S846037	LA-MHD01.001	D007; D008; D009	10/3/2013	WCRRF	68483	LA-MIN02-V.001	WIPP 6	RECV WIPP
			10/3/2013	WCRRF	68454	LA-MIN02-V.001	WIPP 6	RECV WIPP
			10/3/2013	WCRRF	68479	LA-MIN02-V.001	WIPP 6	RECV WIPP
S846055	LA-CIN01.001-Cans	D007; D008; D009	10/29/2013	WCRRF	68579	LA-MIN02-V.001	WIPP 6	RECV WIPP
			10/29/2013	WCRRF	68510	LA-MIN02-V.001	WIPP 7	RECV WIPP
			10/29/2013	WCRRF	68571	LA-MIN02-V.001	WIPP 7	RECV WIPP
S846088	LA-MHD01.001	D007; D008; D009	10/24/2013	WCRRF	68545	LA-MIN02-V.001	WIPP 7	RECV WIPP
			10/24/2013	WCRRF	68548	LA-MIN02-V.001	WIPP 7	RECV WIPP
S846096	LA-MHD01.001	D007; D008; D009	10/3/2013	WCRRF	68502	LA-MIN02-V.001	WIPP 6	RECV WIPP
			10/3/2013	WCRRF	68499	LA-MIN02-V.001	WIPP 6	RECV WIPP
			10/3/2013	WCRRF	68427	LA-MIN02-V.001	WIPP 6	RECV WIPP
S846107	LA-MHD01.001	D007; D008; D009	9/11/2013	WCRRF	68318	LA-MIN02-V.001	WIPP 6	RECV WIPP
			9/11/2013	WCRRF	68334	LA-MIN02-V.001	WIPP 6	RECV WIPP
			9/11/2013	WCRRF	68333	LA-MIN02-V.001	WIPP 7	RECV WIPP
S846132	LA-MHD01.001	D007; D008; D009	1/13/2014	WCRRF	69195	LA-MIN02-V.001	WCS	RECV WCS
			1/13/2014	WCRRF	69193	LA-MIN02-V.001	WCS	RECV WCS
			1/13/2014	WCRRF	69188	LA-MIN02-V.001	WCS	RECV WCS
S846168	LA-MHD01.001	D007; D008; D009	9/10/2013	WCRRF	68330	LA-MIN02-V.001	WIPP 6	RECV WIPP

Parent ID	Original Waste Stream	Parent EPA_CD	RemedDate	Rem Facility	Daughter ID	Waste Stream	Location Category	Current Location
			9/10/2013	WCRRF	68316	LA-MIN02-V.001	WIPP 6	RECV WIPP
			9/10/2013	WCRRF	68345	LA-MIN02-V.001	WIPP 6	RECV WIPP
			9/10/2013	WCRRF	68346	LA-MIN02-V.001	WIPP 6	RECV WIPP
S846172	LA-MHD01.001	D007; D008; D009	9/23/2013	WCRRF	68413	LA-MIN02-V.001	WIPP 6	RECV WIPP
			9/23/2013	WCRRF	68376	LA-MIN02-V.001	WIPP 6	RECV WIPP
S846195	LA-MHD01.001	D007; D008; D009	9/23/2013	WCRRF	68338	LA-MIN02-V.001	WIPP 6	RECV WIPP
			9/23/2013	WCRRF	68448	LA-MIN02-V.001	WIPP 6	RECV WIPP
S846660	LA-MHD01.001	D007; D008; D009	9/19/2013	WCRRF	68447	LA-MIN02-V.001	WIPP 6	RECV WIPP
			9/19/2013	WCRRF	68399	LA-MIN02-V.001	WIPP 6	RECV WIPP
			9/19/2013	WCRRF	68415	LA-MIN02-V.001	WIPP 6	RECV WIPP
S851416	LA-CIN01.001-Cans	D007; D008; D009	4/24/2014	WCRRF	69634	LA-MIN02-V.001	LANL	Dome 375
			4/24/2014	WCRRF	69548	LA-MIN02-V.001	LANL	Dome 375
S851418	LA-CIN01.001-Cans	D007; D008; D009	4/18/2014	WCRRF	69633	LA-MIN02-V.001	LANL	Dome 375
			4/18/2014	WCRRF	69635	LA-MIN02-V.001	LANL	Dome 375
			4/18/2014	WCRRF	69015	LA-MIN02-V.001	LANL	Dome 375
S851426	LA-MHD01.001	D007; D008; D009	10/24/2013	WCRRF	68482	LA-MIN02-V.001	WIPP 6	RECV WIPP
			10/24/2013	WCRRF	68546	LA-MIN02-V.001	WCS	RECV WCS
S851432	LA-MHD01.001	None Identified by Generator	10/23/2012	WCRRF	92231	LA-MIN02-V.001	WIPP 6	RECV WIPP
			2/9/2013	WCRRF	92894	LA-MHD01.001	WIPP 6	RECV WIPP
			2/11/2013	WCRRF	92911	LA-MIN02-V.001	WIPP 6	RECV WIPP
			2/12/2013	WCRRF	92919	LA-MIN02-V.001	WIPP 6	RECV WIPP
S851436	LA-MHD01.001	D007; D008; D009	1/14/2014	WCRRF	69194	LA-MIN02-V.001	WCS	RECV WCS
			1/14/2014	WCRRF	69043	LA-MIN02-V.001	WCS	RECV WCS
			1/14/2014	WCRRF	69192	LA-MIN02-V.001	WCS	RECV WCS
S851506	LA-MHD01.001	None Identified by Generator	10/25/2012	WCRRF	92248	LA-MIN02-V.001	WIPP 6	RECV WIPP
			10/25/2012	WCRRF	92249	LA-MIN02-V.001	WIPP 6	RECV WIPP
			2/9/2013	WCRRF	92892	LA-MIN02-V.001	WIPP 6	RECV WIPP
			2/10/2013	WCRRF	92905	LA-MIN02-V.001	WIPP 6	RECV WIPP
			4/10/2013	WCRRF	93442	LA-MHD01.001	WIPP 6	RECV WIPP
S851682	LA-MHD01.001	D007; D008; D009	9/11/2013	WCRRF	68372	LA-MIN02-V.001	WIPP 6	RECV WIPP
			9/11/2013	WCRRF	68343	LA-MIN02-V.001	WIPP 6	RECV WIPP
			9/11/2013	WCRRF	68373	LA-MIN02-V.001	WIPP 6	RECV WIPP
S851739	LA-MHD01.001	D007; D008; D009	9/24/2013	WCRRF	68450	LA-MIN02-V.001	WIPP 6	RECV WIPP
			9/24/2013	WCRRF	68453	LA-MIN02-V.001	WIPP 6	RECV WIPP
S851752	LA-MHD01.001	D007; D008; D009	9/19/2013	WCRRF	68407	LA-MIN02-V.001	WIPP 6	RECV WIPP
S851764	LA-MHD01.001	D007; D008; D009	1/12/2014	WCRRF	69099	LA-MIN02-V.001	WCS	RECV WCS

Parent ID	Original Waste Stream	Parent EPA_CD	RemedDate	Rem Facility	Daughter ID	Waste Stream	Location Category	Current Location
			1/12/2014	WCRRF	69083	LA-MIN02-V.001	WCS	RECV WCS
S851772	LA-MHD01.001	D007; D008; D009	1/12/2014	WCRRF	69208	LA-MIN02-V.001	LANL	Dome 375
S851852	LA-CIN01.001-Cans	D008	7/25/2013	WCRRF	94069	LA-CIN01.001-Cans	WIPP 6	RECV WIPP
			7/25/2013	WCRRF	94068	LA-CIN01.001-Cans	LANL	Dome 375
S852513	LA-MHD01.001	D007; D008; D009	9/12/2013	WCRRF	68335	LA-MIN02-V.001	WIPP 6	RECV WIPP
			9/12/2013	WCRRF	68336	LA-MIN02-V.001	WIPP 6	RECV WIPP
			9/12/2013	WCRRF	68341	LA-MIN02-V.001	WCS	RECV WCS
			9/12/2013	WCRRF	68344	LA-MIN02-V.001	WIPP 6	RECV WIPP
S852530	LA-MHD01.001	D007; D008; D009	12/23/2013	WCRRF	69076	LA-MIN02-V.001	LANL	Dome 375
			12/23/2013	WCRRF	69045	LA-MIN02-V.001	WCS	RECV WCS
			12/23/2013	WCRRF	69087	LA-MIN02-V.001	WCS	RECV WCS
S852588	LA-CIN01.001-Cans	D007; D008; D009	3/18/2014	WCRRF	69565	LA-MIN02-V.001	WCS	RECV WCS
			3/18/2014	WCRRF	69595	LA-MIN02-V.001	LANL	Dome 375
S852590	LA-MHD01.001	D007; D008; D009	11/19/2013	WCRRF	68655	LA-MIN02-V.001	WIPP 7	RECV WIPP
			11/19/2013	WCRRF	68652	LA-MIN02-V.001	WIPP 7	RECV WIPP
S852592	LA-MHD01.001	D007; D008; D009	1/28/2014	WCRRF	69282	LA-MIN02-V.001	WCS	RECV WCS
			1/28/2014	WCRRF	69285	LA-MIN02-V.001	WCS	RECV WCS
S852593	LA-MHD01.001	D007; D008; D009	1/10/2014	WCRRF	69179	LA-MIN02-V.001	WCS	RECV WCS
S852883	LA-MHD01.001	D007; D008; D009	10/25/2013	WCRRF	68542	LA-MIN02-V.001	WIPP 6	RECV WIPP
			10/25/2013	WCRRF	68513	LA-MIN02-V.001	WIPP 7	RECV WIPP
S852895	LA-MHD01.001	D007; D008; D009	11/7/2013	WCRRF	68555	LA-MIN02-V.001	WIPP 7	RECV WIPP
			11/7/2013	WCRRF	68549	LA-MIN02-V.001	WIPP 6	RECV WIPP
			11/7/2013	WCRRF	68609	LA-MIN02-V.001	WIPP 7	RECV WIPP
S852923	LA-MHD01.001	D007; D008; D009	9/19/2013	WCRRF	68410	LA-MIN02-V.001	WIPP 6	RECV WIPP
			9/19/2013	WCRRF	68393	LA-MIN02-V.001	WIPP 6	RECV WIPP
			9/19/2013	WCRRF	68446	LA-MIN02-V.001	WIPP 6	RECV WIPP
S852931	LA-MHD01.001	D007; D008; D009	1/28/2014	WCRRF	69295	LA-MIN02-V.001	WCS	RECV WCS
			1/28/2014	WCRRF	69279	LA-MIN02-V.001	WCS	RECV WCS
S852952	LA-CIN01.001-Cans	D008	1/17/2013	WCRRF	92616	LA-MHD01.001	WIPP 6	RECV WIPP
			1/17/2013	WCRRF	92618	LA-MHD01.001	WIPP 6	RECV WIPP
S853006	LA-MHD01.001	D007; D008; D009	1/9/2014	WCRRF	69177	LA-MIN02-V.001	WCS	RECV WCS
			1/9/2014	WCRRF	69105	LA-MIN02-V.001	WCS	RECV WCS
			1/9/2014	WCRRF	69181	LA-MIN02-V.001	WCS	RECV WCS
			1/9/2014	WCRRF	69182	LA-MIN02-V.001	WCS	RECV WCS

Parent ID	Original Waste Stream	Parent EPA_CD	RemedDate	Rem Facility	Daughter ID	Waste Stream	Location Category	Current Location
S853279	LA-MHD01.001	D007; D008; D009	11/19/2013	WCRRF	68672	LA-MIN02-V.001	WIPP 7	RECV WIPP
			11/19/2013	WCRRF	68507	LA-MIN02-V.001	LANL	Dome 375
			11/19/2013	WCRRF	68659	LA-MIN02-V.001	WIPP 7	RECV WIPP
S853326	LA-MHD01.001	D007; D008; D009	11/13/2013	WCRRF	68629	LA-MIN02-V.001	WIPP 7	RECV WIPP
			11/13/2013	WCRRF	68654	LA-MIN02-V.001	WIPP 7	RECV WIPP
S853482	LA-CIN01.001-Cans	D008	8/19/2013	WCRRF	94216	LA-CIN01.001-Cans	WIPP 6	RECV WIPP
			8/19/2013	WCRRF	94215	LA-CIN01.001-Cans	WIPP 6	RECV WIPP
			8/19/2013	WCRRF	94217	LA-CIN01.001-Cans	WIPP 6	RECV WIPP
S853492	LA-MHD01.001	D007; D008; D009	11/15/2013	WCRRF	68667	LA-MIN02-V.001	WIPP 7	RECV WIPP
			11/15/2013	WCRRF	68665	LA-MIN02-V.001	LANL	Dome 375
			11/15/2013	WCRRF	68669	LA-MIN02-V.001	WIPP 7	RECV WIPP
S853641	LA-MHD01.001	D007; D008; D009	9/5/2013	WCRRF	68300	LA-MIN02-V.001	WIPP 6	RECV WIPP
			9/5/2013	WCRRF	68310	LA-MIN02-V.001	WIPP 6	RECV WIPP
			9/5/2013	WCRRF	68321	LA-MIN02-V.001	WIPP 6	RECV WIPP
S853771	LA-MHD01.001	D007; D008; D009	11/5/2013	WCRRF	68612	LA-MIN02-V.001	WIPP 6	RECV WIPP
			11/5/2013	WCRRF	68616	LA-MIN02-V.001	WIPP 7	RECV WIPP
S853898	LA-MHD01.001	D007; D008; D009	10/1/2013	WCRRF	68474	LA-MIN02-V.001	WIPP 6	RECV WIPP
			10/1/2013	WCRRF	68475	LA-MIN02-V.001	WIPP 6	RECV WIPP
S853899	LA-MHD01.001	D007; D008; D009	9/18/2013	WCRRF	68409	LA-MIN02-V.001	WIPP 6	RECV WIPP
			9/18/2013	WCRRF	68375	LA-MIN02-V.001	WIPP 6	RECV WIPP
S854616	LA-MHD01.001	D007; D008; D009	10/23/2013	WCRRF	68456	LA-MIN02-V.001	WIPP 6	RECV WIPP
			10/23/2013	WCRRF	68536	LA-MIN02-V.001	WIPP 6	RECV WIPP
S855126	LA-MHD01.001	D007; D008; D009	5/1/2013	WCRRF	93597	LA-MIN02-V.001	WIPP 6	RECV WIPP
			5/1/2013	WCRRF	93598	LA-MIN02-V.001	WIPP 6	RECV WIPP
			5/1/2013	WCRRF	93599	LA-MIN02-V.001	WIPP 6	RECV WIPP
S855139	LA-MHD01.001	D007; D008; D009	1/11/2014	WCRRF	68648	LA-MIN02-V.001	LANL	Dome 375
			1/11/2014	WCRRF	69163	LA-MIN02-V.001	WCS	RECV WCS
S855216	LA-MHD01.001	D007; D008; D009	1/12/2014	WCRRF	69210	LA-MIN02-V.001	WCS	RECV WCS
			1/12/2014	WCRRF	69161	LA-MIN02-V.001	WCS	RECV WCS
S855240	LA-MHD01.001	D007; D008; D009	9/17/2013	WCRRF	68381	LA-MIN02-V.001	WIPP 6	RECV WIPP
			9/17/2013	WCRRF	68385	LA-MIN02-V.001	WIPP 6	RECV WIPP
			9/17/2013	WCRRF	68391	LA-MIN02-V.001	WIPP 6	RECV WIPP
S855290	LA-MHD01.001	D007; D008; D009	10/23/2013	WCRRF	68539	LA-MIN02-V.001	WIPP 6	RECV WIPP
			10/23/2013	WCRRF	68537	LA-MIN02-V.001	WIPP 6	RECV WIPP
S855566	LA-MHD01.001	D007; D008; D009	1/10/2014	WCRRF	69159	LA-MIN02-V.001	WCS	RECV WCS

Parent ID	Original Waste Stream	Parent EPA_CD	RemedDate	Rem Facility	Daughter ID	Waste Stream	Location Category	Current Location
			1/10/2014	WCRRF	69185	LA-MIN02-V.001	WCS	RECV WCS
S855677	LA-CIN01.001-Cans	D007; D008; D009	10/23/2013	WCRRF	68544	LA-MIN02-V.001	WIPP 6	RECV WIPP
			10/23/2013	WCRRF	68556	LA-MIN02-V.001	WIPP 6	RECV WIPP
S855793	LA-MHD01.001	D007; D008; D009	12/4/2013	WCRRF	68660	LA-MIN02-V.001	WIPP 7	RECV WIPP
			12/4/2013	WCRRF	68685	LA-MIN02-V.001	LANL	Dome 375
S855943	LA-MHD01.001	D007; D008; D009	9/18/2013	WCRRF	68384	LA-MIN02-V.001	WIPP 6	RECV WIPP
			9/18/2013	WCRRF	68383	LA-MIN02-V.001	WIPP 6	RECV WIPP
S860014	LA-MHD01.001	D007; D008; D009	12/15/2013	WCRRF	69063	LA-MIN02-V.001	WCS	RECV WCS
			12/15/2013	WCRRF	69066	LA-MIN02-V.001	WCS	RECV WCS
S860093	LA-MHD01.001	D007; D008; D009	11/7/2013	WCRRF	68615	LA-MIN02-V.001	WIPP 6	RECV WIPP
			11/7/2013	WCRRF	68554	LA-MIN02-V.001	WIPP 6	RECV WIPP
S860095	LA-MHD01.001	D007; D008; D009	10/22/2013	WCRRF	68550	LA-MIN02-V.001	WIPP 6	RECV WIPP
			10/22/2013	WCRRF	68452	LA-MIN02-V.001	WIPP 6	RECV WIPP
S860096	LA-MHD01.001	None Identified by Generator	1/23/2013	WCRRF	92674	LA-MIN02-V.001	WIPP 6	RECV WIPP
			1/18/2014	WCRRF	69230	LA-CIN01.001-Cans	WCS	RECV WCS
S861975	LA-MHD01.001	D007; D008; D009	10/22/2013	WCRRF	68480	LA-MIN02-V.001	WIPP 6	RECV WIPP
			10/22/2013	WCRRF	68511	LA-MIN02-V.001	WIPP 7	RECV WIPP
S861976	LA-MHD01.001	D007; D008; D009	12/4/2013	WCRRF	68661	LA-MIN02-V.001	WCS	RECV WCS
			12/4/2013	WCRRF	68686	LA-MIN02-V.001	WCS	RECV WCS
S861980	LA-MHD01.001	D007; D008; D009	1/18/2014	WCRRF	69237	LA-MIN02-V.001	WCS	RECV WCS
			1/18/2014	WCRRF	69234	LA-MIN02-V.001	WCS	RECV WCS
S861995	LA-MHD01.001	D007; D008; D009	12/16/2013	WCRRF	69069	LA-MIN02-V.001	WCS	RECV WCS
			12/16/2013	WCRRF	69064	LA-MIN02-V.001	WCS	RECV WCS
			12/16/2013	WCRRF	69103	LA-MIN02-V.001	WCS	RECV WCS
S862241	LA-MHD01.001	D007; D008; D009	9/18/2013	WCRRF	68417	LA-MIN02-V.001	WIPP 6	RECV WIPP
			9/18/2013	WCRRF	68378	LA-MIN02-V.001	WIPP 6	RECV WIPP
S862255	LA-MHD01.001	D007; D008; D009	10/28/2013	WCRRF	68572	LA-MIN02-V.001	WIPP 6	RECV WIPP
			10/28/2013	WCRRF	68574	LA-MIN02-V.001	WIPP 6	RECV WIPP
S862411	LA-MHD01.001	None Identified by Generator	10/24/2012	WCRRF	92239	LA-MIN02-V.001	WIPP 6	RECV WIPP
S863696	LA-MHD01.001	None Identified by Generator	2/15/2012	WCRRF	90931	LA-MIN02-S.001	WIPP 6	RECV WIPP
			11/14/2012	WCRRF	92374	LA-MIN02-V.001	WIPP 6	RECV WIPP
			1/24/2013	WCRRF	92680	LA-MIN02-V.001	WIPP 6	RECV WIPP
			1/24/2013	WCRRF	92684	LA-MIN02-V.001	WIPP 6	RECV WIPP

Parent ID	Original Waste Stream	Parent EPA_CD	RemedDate	Rem Facility	Daughter ID	Waste Stream	Location Category	Current Location
S863787	LA-MHD01.001	None Identified by Generator	10/2/2012	WCRRF	92129	LA-MHD01.001	WIPP 6	RECV WIPP
			10/9/2012	WCRRF	92192	LA-MHD01.001	WIPP 6	RECV WIPP
			10/22/2012	WCRRF	92227	LA-MIN02-V.001	WIPP 6	RECV WIPP
			1/23/2013	WCRRF	92678	LA-MIN02-V.001	WIPP 6	RECV WIPP
S863788	LA-MHD01.001	None Identified by Generator	10/23/2012	WCRRF	92233	LA-MIN02-V.001	WIPP 6	RECV WIPP
			11/13/2012	WCRRF	92357	LA-MIN02-V.001	WIPP 6	RECV WIPP
			11/13/2012	WCRRF	92358	LA-MHD01.001	WIPP 6	RECV WIPP
			11/14/2012	WCRRF	92376	LA-MHD01.001	WIPP 6	RECV WIPP
S863789	LA-MHD01.001	D007; D008; D009	11/21/2013	WCRRF	68680	LA-MIN02-V.001	WIPP 7	RECV WIPP
			11/21/2013	WCRRF	68671	LA-MIN02-V.001	WIPP 7	RECV WIPP
S864332	LA-MHD01.001	None	12/16/2010	WCRRF	87822	LA-MHD01.001	WIPP 6	RECV WIPP
					87823	LA-MIN04-S.001	LANL	Dome 232
					87824	LA-MIN04-S.001	WIPP 6	RECV WIPP
					87825	LA-MIN04-S.001	LANL	Dome 232
					87826	LA-MIN04-S.001	LANL	Dome 153
					87827	LA-MIN04-S.001	LANL	Dome 153
S864662	LA-MHD01.001	D007; D008; D009	11/6/2013	WCRRF	68608	LA-MIN02-V.001	WIPP 6	RECV WIPP
			11/6/2013	WCRRF	68614	LA-MIN02-V.001	WIPP 7	RECV WIPP
S864663	LA-MHD01.001	D007; D008; D009	11/21/2013	WCRRF	68679	LA-MIN02-V.001	WCS	RECV WCS
S864694	LA-MHD01.001	D007; D008; D009	12/15/2013	WCRRF	68681	LA-MIN02-V.001	WCS	RECV WCS
			12/15/2013	WCRRF	69061	LA-MIN02-V.001	WCS	RECV WCS
S870065	LA-MHD01.001	D007; D008; D009	11/22/2013	WCRRF	68687	LA-MIN02-V.001	WIPP 7	RECV WIPP
S870213	LA-MHD01.001	D007; D008; D009	3/1/2014	WCRRF	69413	LA-MIN02-V.001	WCS	RECV WCS
			3/1/2014	WCRRF	69013	LA-MIN02-V.001	LANL	Dome 375
			3/1/2014	WCRRF	69492	LA-MIN02-V.001	WCS	RECV WCS
S870338	LA-MHD01.001	D007; D008; D009	1/12/2014	WCRRF	69209	LA-MIN02-V.001	WCS	RECV WCS
			1/12/2014	WCRRF	69196	LA-MIN02-V.001	WCS	RECV WCS
S870381	LA-MHD01.001	D007; D008; D009	11/11/2013	WCRRF	68623	LA-MIN02-V.001	WIPP 7	RECV WIPP
			11/11/2013	WCRRF	68625	LA-MIN02-V.001	WCS	RECV WCS
S870475	LA-MHD01.001	D007; D008; D009	4/28/2013	WCRRF	93576	LA-MIN02-V.001	WIPP 6	RECV WIPP
			4/28/2013	WCRRF	93577	LA-MIN02-V.001	WIPP 6	RECV WIPP
S870478	LA-MHD01.001	D007; D008; D009	1/11/2014	WCRRF	69158	LA-MIN02-V.001	WCS	RECV WCS
			1/11/2014	WCRRF	69183	LA-MIN02-V.001	LANL	Dome 375
S871844	LA-MHD01.001	None Identified by Generator	10/25/2012	WCRRF	92251	LA-MIN02-V.001	WIPP 6	RECV WIPP
			10/25/2012	WCRRF	92252	LA-MIN02-V.001	WIPP 6	RECV WIPP
			11/8/2012	WCRRF	92351	LA-MHD01.001	WIPP 6	RECV WIPP

Parent ID	Original Waste Stream	Parent EPA_CD	RemedDate	Rem Facility	Daughter ID	Waste Stream	Location Category	Current Location
S873554	LA-MHD01.001	D007; D008; D009	12/6/2013	WCRRF	69033	LA-MIN02-V.001	WCS	RECV WCS
			12/6/2013	WCRRF	69034	LA-MIN02-V.001	WCS	RECV WCS
			12/6/2013	WCRRF	69036	LA-MHD01.001	LANL	Dome 375
S881562	LA-MHD01.001	None Identified by Generator	2/28/2012	WCRRF	90999	LA-MHD01.001	WIPP 6	RECV WIPP
			10/4/2012	WCRRF	92166	LA-MHD01.001	WIPP 6	RECV WIPP
			10/15/2012	WCRRF	92206	LA-MHD01.001	WIPP 6	RECV WIPP
			11/14/2012	WCRRF	92378	LA-MHD01.001	WIPP 6	RECV WIPP
			2/9/2013	WCRRF	92890	LA-MIN02-V.001	WIPP 6	RECV WIPP
			2/11/2013	WCRRF	92915	LA-MIN02-V.001	WIPP 6	RECV WIPP
S881563	LA-MHD01.001	None Identified by Generator	2/28/2012	WCRRF	91006	LA-MHD01.001	WIPP 6	RECV WIPP
			10/4/2012	WCRRF	92175	LA-MHD01.001	WIPP 6	RECV WIPP
			2/10/2013	WCRRF	92898	LA-MIN02-V.001	WIPP 6	RECV WIPP
			2/10/2013	WCRRF	92900	LA-MHD01.001	WCS	RECV WCS
			2/10/2013	WCRRF	92902	LA-MIN02-V.001	WIPP 6	RECV WIPP
			2/11/2013	WCRRF	92909	LA-MIN02-V.001	WIPP 6	RECV WIPP
S881569	LA-MHD01.001	None Identified by Generator	11/14/2012	WCRRF	92380	LA-MIN02-V.001	WIPP 6	RECV WIPP
			2/10/2013	WCRRF	92907	LA-MIN02-V.001	WIPP 6	RECV WIPP
			2/10/2013	WCRRF	92896	LA-MIN02-V.001	WIPP 6	RECV WIPP
			2/11/2013	WCRRF	92913	LA-MIN02-V.001	WIPP 6	RECV WIPP
			2/12/2013	WCRRF	92921	LA-MIN02-V.001	WIPP 6	RECV WIPP
			4/15/2013	WCRRF	93487	LA-MIN02-V.001	WIPP 6	RECV WIPP
S881570	LA-MHD01.001	D007; D008; D009	9/25/2013	WCRRF	68451	LA-MIN02-V.001	WIPP 6	RECV WIPP
			9/25/2013	WCRRF	68397	LA-MIN02-V.001	WIPP 6	RECV WIPP
			9/25/2013	WCRRF	68461	LA-MIN02-V.001	WIPP 6	RECV WIPP
S881607	LA-MHD01.001	D007; D008; D009	8/8/2013	WCRRF	94148	LA-MIN02-V.001	WIPP 6	RECV WIPP
			8/8/2013	WCRRF	94149	LA-MIN02-V.001	WIPP 6	RECV WIPP
S881608	LA-MHD01.001	None Identified by Generator	11/13/2012	WCRRF	92364	LA-MHD01.001	WIPP 6	RECV WIPP
			11/13/2012	WCRRF	92366	LA-MIN02-V.001	WIPP 6	RECV WIPP
			2/9/2013	WCRRF	92888	LA-MIN02-V.001	WIPP 6	RECV WIPP
			10/4/2013	WCRRF	68457	LA-MIN02-V.001	WIPP 6	RECV WIPP
S883130	LA-MHD01.001	None Identified by Generator	10/3/2012	WCRRF	92152	LA-MIN02-V.001	WIPP 6	RECV WIPP
			10/15/2012	WCRRF	92204	LA-MHD01.001	WIPP 6	RECV WIPP
			10/23/2012	WCRRF	92235	LA-MIN02-V.001	WIPP 6	RECV WIPP
			1/23/2013	WCRRF	92676	LA-MIN02-V.001	WIPP 6	RECV WIPP
S891279	LA-MHD01.001	D007; D008; D009	11/20/2013	WCRRF	68656	LA-MIN02-V.001	WCS	RECV WCS
S891387	LA-MHD01.001	D007; D008; D009	2/28/2014	WCRRF	69493	LA-MIN02-V.001	WCS	RECV WCS
			2/28/2014	WCRRF	69014	LA-MIN02-V.001	WCS	RECV WCS
			2/28/2014	WCRRF	69491	LA-MIN02-V.001	LANL	Dome 375

Parent ID	Original Waste Stream	Parent EPA_CD	RemedDate	Rem Facility	Daughter ID	Waste Stream	Location Category	Current Location
S891513	LA-MHD01.001	D007; D008; D009	9/7/2013	WCRRF	68327	LA-MIN02-V.001	WIPP 6	RECV WIPP
			9/7/2013	WCRRF	68328	LA-MIN02-V.001	WIPP 7	RECV WIPP
			9/7/2013	WCRRF	68340	LA-MIN02-V.001	WIPP 6	RECV WIPP
S892963	LA-MHD01.001	D007; D008; D009	3/1/2014	WCRRF	69490	LA-MIN02-V.001	LANL	Dome 375
			3/1/2014	WCRRF	69361	LA-MIN02-V.001	LANL	Dome 375
			3/1/2014	WCRRF	69430	LA-MIN02-V.001	WCS	RECV WCS
S900215	LA-MHD01.001	D007; D008; D009	12/22/2013	WCRRF	69080	LA-MIN02-V.001	WCS	RECV WCS
			12/22/2013	WCRRF	69074	LA-MIN02-V.001	WCS	RECV WCS
			12/22/2013	WCRRF	69081	LA-MIN02-V.001	WCS	RECV WCS
S901114	LA-MHD01.001	D007; D008; D009	1/11/2014	WCRRF	69094	LA-MIN02-V.001	WCS	RECV WCS
			1/11/2014	WCRRF	69079	LA-MIN02-V.001	LANL	Dome 375
			1/11/2014	WCRRF	69187	LA-MIN02-V.001	WCS	RECV WCS
S910170	LA-MHD01.001	D002; D007; D008; D009	10/2/2013	WCRRF	68426	LA-MIN02-V.001	WCS	RECV WCS
			10/2/2013	WCRRF	68494	LA-MIN02-V.001	WIPP 7	RECV WIPP
			10/2/2013	WCRRF	68501	LA-MIN02-V.001	WIPP 7	RECV WIPP
S910171	LA-MHD01.001	None Identified by Generator	10/20/2011	WCRRF	90315	LA-MHD01.001	WIPP 6	RECV WIPP
			12/11/2012	WCRRF	92459	LA-MIN02-V.001	LANL	Dome 375
			12/12/2012	WCRRF	92461	LA-MHD01.001	WIPP 6	RECV WIPP
			12/17/2012	WCRRF	92472	LA-MHD01.001	LANL	Dome 375
S910172	LA-MHD01.001	None Identified by Generator	12/17/2012	WCRRF	92466	LA-MHD01.001	WIPP 6	RECV WIPP
			2/11/2013	WCRRF	92917	LA-MIN02-V.001	WIPP 6	RECV WIPP