55

ENTERED

Los Alamos
NATIONAL LABORATORY
EST 1943

***Environmental Protection Division***
***Environmental Compliance Programs (ENV-CP)***
PO Box 1663, K490
Los Alamos, New Mexico 87545
(505) 667-0666

***National Nuclear Security Administration***
***Los Alamos Field Office, A316***
3747 West Jemez Road
Los Alamos, New Mexico, 87545
(505) 667-5794/Fax (505) 667-5948

*Date*: MAR 19 2015
*Symbol*: ENV-DO-15-0075
*LAUR*: 80-1168, 15-21522, 15-21567 & LA-3542
*Locates Action No.*: Not Applicable

RECEIVED
MAR 19 2015
NMED
Hazardous Waste Bureau

Mr. John E. Kieling
Hazardous Waste Bureau
New Mexico Environment Department
2905 Rodeo Park Drive East, Building 1
Santa Fe, NM 87505

Dear Mr. Kieling:

**Subject: Transmittal of Reference Information Regarding Unremediated Nitrate Salt Waste Containers**

The purpose of this letter is to transmit requested references and provide response to the New Mexico Environment Department- Hazardous Waste Bureau (NMED-HWB) electronic mail (e-mail) correspondence to the Los Alamos National Security, LLC (LANS) and the U.S. Department of Energy (DOE), the Permittees, on February 20 and 25, 2015. The information requested is associated with a memorandum submitted to the NMED-HWB by the Permittees on February 13, 2014.

The February 20, 2015 e-mail requests four documents referenced within the memorandum titled, *Hazards Associated with Legacy Nitrate Salt Waste Drums Managed under the Container Isolation Plan,* submitted to the NMED-HWB on February 13, 2015. The e-mail also requests all documentation that demonstrates that there are no combustible materials or fuel in the 29 unremediated nitrate salt-bearing waste containers located at the Los Alamos National Laboratory. A follow-up e-mail received from the NMED-HWB on February 25, 2015 included a request to confirm that Waste Lock 770 was not added to the 29 unremediated nitrate salt-bearing waste containers stored at LANL.

The documents referenced in the memorandum are included as Enclosures 1, 2, 3, and 4 of this submittal. All available waste generator documentation for the 29 unremediated nitrate salt-bearing waste containers is included as Attachment D of Enclosure 1 in the Permittees' March 9, 2015 submittal, *Response to February 17, 2015 Request for Information, Management of Nitrate Salt-Bearing Waste, Los Alamos National Laboratory, EPA ID# NM0890010515*. Additionally, the Permittees confirmed

during a twice weekly technical phone call on March 5, 2015 that there has been no absorbents added to the 29 unremediated nitrate salt-bearing waste containers that are stored at LANL.

If you have comments or questions regarding this submittal, please contact Mark P. Haagenstad at (505) 665-2014 or Gene E. Turner at (505) 667-5794.

Sincerely,

Alison M. Dorries
Division Leader
Environmental Protection Division
Los Alamos National Security LLC

Sincerely,

Gene E. Turner
Environmental Permitting Manager
Environmental Projects Office
Los Alamos Field Office
U.S. Department of Energy

AMD:GET:MPH:LVH/

Enclosures:
(1) Plutonium Processing at the Los Alamos Scientific Laboratory
(2) Plutonium Recovery at the Los Alamos Scientific Laboratory
(3) TA-55 Evaporator Bottom Characterization
(4) Characterization of TA-55 Evaporator Bottoms Waste Stream

Cy:
Ryan Flynn, NMED, Santa Fe, NM, (E-File)
Kathryn M. Roberts, NMED, Santa Fe, NM, (E-File)
Steve Pullen, NMED/HWB, Santa Fe, NM, (E-File)
Timothy Hall, NMED/HWB, Santa Fe, NM, (E-File)
Peter Maggiore, NA-LA, (E-File)
Lisa Cummings, NA-LA, (E-File)
Gene E. Turner, NA-LA, (E-File)
Kirsten M. Laskey, NA-LA, (E-File)
Michael A. Lansing, PADOPS, (E-File)
Amy E. De Palma, PADOPS, (E-File)
Randall M. Erickson, ADEP, (E-File)
Enrique Torres, ADEP, (E-File)
Cheryl D. Cabbil, ADNHHO, (E-File)
Michael T. Brandt, ADESH, (E-File)
Raeanna R. Sharp-Geiger, ADESH, (E-File)
Alison M. Dorries, ENV-DO, (E-File)
James S. Clemmons, LTP, (E-File)
Rick A. Alexander, EWMO-DO, (E-File)
Andrew R. Baumer, EWMO-DO, (E-File)
Donald L. Allen, LTP, (E-File)
Scott A. Miller, LTP-SSS, (E-File)
David E. Frederici, LTP-SSS, (E-File)

Selena Z. Sauer, LC-ESH, (E-File)
Kenneth M. Hargis, LTP-PTS, (E-File)
Mark P. Haagenstad, ENV-CP, (E-File)
Deborah L. Guffee, SI-DC, (E-File)
Yvette S. Branch, SI-DC, (E-File)
Luciana Vigil-Holterman, ENV-CP, (E-File)
lasomailbox@nnsa.doe.gov, (E-File)
locatesteam@lanl.gov, (E-File)
env-correspondence@lanl.gov, (E-File)
rcra-prr@lanl.gov, (E-File)

# ENCLOSURE 1

Plutonium Processing at the Los Alamos Scientific Laboratory

ENV-DO-15-0075

LA-3542

Date: MAR 1 9 2015

LA-3542

C.2

# LOS ALAMOS SCIENTIFIC LABORATORY
of the
University of California
LOS ALAMOS, NEW MEXICO

SCANNED JUL 17 1995

LOS ALAMOS NATIONAL LABORATORY
3 9338 00373 9256

# Plutonium Processing at the Los Alamos Scientific Laboratory

DO NOT CIRCULATE

PERMANENT RETENTION

REQUIRED BY CONTRACT

UNITED STATES
ATOMIC ENERGY COMMISSION
CONTRACT W-7405-ENG. 36

## LEGAL NOTICE

This report was prepared as an account of Government sponsored work. Neither the United States, nor the Commission, nor any person acting on behalf of the Commission:

A. Makes any warranty or representation, expressed or implied, with respect to the accuracy, completeness, or usefulness of the information contained in this report, or that the use of any information, apparatus, method, or process disclosed in this report may not infringe privately owned rights; or

B. Assumes any liabilities with respect to the use of, or for damages resulting from the use of any information, apparatus, method, or process disclosed in this report.

As used in the above, "person acting on behalf of the Commission" includes any employee or contractor of the Commission, or employee of such contractor, to the extent that such employee or contractor of the Commission, or employee of such contractor prepares, disseminates, or provides access to, any information pursuant to his employment or contract with the Commission, or his employment with such contractor.

This report expresses the opinions of the author or authors and does not necessarily reflect the opinions or views of the Los Alamos Scientific Laboratory.

Printed in the United States of America. Available from
Clearinghouse for Federal Scientific and Technical Information
National Bureau of Standards, U. S. Department of Commerce
Springfield, Virginia 22151
Price: Printed Copy $3.00; Microfiche $0.65

LA-3542
UC-4, CHEMISTRY
TID-4500

# LOS ALAMOS SCIENTIFIC LABORATORY
## of the
## University of California
### LOS ALAMOS, NEW MEXICO

Report written: February 1968
Report distributed: April 1969

# Plutonium Processing at the Los Alamos Scientific Laboratory

LOS ALAMOS NATL. LAB. LIBS.
3 9338 00373 9256

by
Eldon L. Christensen
and
William J. Maraman

## CONTENTS


| | Page |
|---|---|
| Abstract | 1 |
| Introduction | 1 |
| Chapter | |
| 1. History | 2 |
| 2. General Plant Facilities and Standards | 8 |
| 3. Dissolving Plutonium Metal, Alloys, and Casting Skulls | 15 |
| 4. Dissolving Plutonium Compounds | 22 |
| 5. Dissolving Reduction and Casting Residues | 28 |
| 6. Processing Noncombustible Residues | 36 |
| 7. Processing Combustible Residues | 44 |
| 8. Processing Plutonium Solutions | 48 |
| 8.1 Development of Procedures | 48 |
| 8.2 Chloride Solutions | 49 |
| 8.3 Stabilizing Plutonium Valence | 49 |
| 8.4 Precipitation Methods | 50 |
| 8.5 Cation-Exchange Processes | 58 |
| 8.6 Anion-Exchange Processes | 61 |
| 8.7 Chloride Anion-Exchange Systems | 67 |
| 8.8 Organics | 68 |
| 8.9 Solvent Extraction | 69 |


## LIST OF FIGURES


| | | |
|---|---|---|
| Fig. 1. | Process "A" for plutonium purification. | 3 |
| Fig. 2. | Recovery flow sheet in 1944. | 4 |
| Fig. 3. | Process "B" for plutonium purification. | 5 |
| Fig. 4. | Process "C" for plutonium purification. | 5 |
| Fig. 5. | Flow of material in recovery plant through 1959. | 6 |
| Fig. 6. | Flow of material in present recovery plant. | 7 |
| Fig. 7. | General layout of DP Site West. | 8 |
| Fig. 8. | Recovery facilities at DP Site West. | 9 |
| Fig. 9. | Ether extraction equipment used in 1944. | 10 |
| Fig. 10. | Glove boxes for filtration of plutonium hydroxide. | 10 |
| Fig. 11. | Equipment for recovery of plutonium in 1945. | 11 |
| Fig. 12. | Typical glove box construction during 1954-1959. | 11 |
| Fig. 13. | Typical glove boxes in present plant. | 12 |
| Fig. 14. | Dimensions of glove boxes shown in Fig. 13. | 13 |
| Fig. 15. | Vessel for routine metal dissolution. | 16 |
| Fig. 16. | Design of skull dissolver glove box. | 16 |
| Fig. 17. | Flow sheet of process for dissolving plutonium metal. | 18 |
| Fig. 18. | Device for removing plutonium solutions from glove boxes. | 19 |
| Fig. 19. | Flow sheet for dissolution of plutonium hydride in HCl. | 23 |
| Fig. 20. | Dissolution of plutonium oxide residues. | 24 |
| Fig. 21. | Screen for washing crucible. | 27 |
| Fig. 22. | Installation of slag and crucible dissolver in 1951. | 29 |
| Fig. 23. | Dissolution procedure for reduction residues in 1951. | 30 |
| Fig. 24. | Graphite filter for removal of $SiO_2$ from dissolved crucible solutions. | 31 |
| Fig. 25. | Glass cloth filter for removal of $SiO_2$ from dissolved crucible solutions. | 31 |
| Fig. 26. | Geometrically favorable crucible dissolver. | 31 |
| Fig. 27. | Caustic scrubbing towers for crucible dissolvers. | 32 |
| Fig. 28. | Flow sheet for geometrically favorable slag and crucible dissolvers. | 33 |
| Fig. 29. | Installation of crucible dissolver, filter feed tanks, and scrubber tower. | 34 |

Fig. 30. Drum filter for $SiO_2$ removal. 35
Fig. 31. Procedure for dissolution of MgO casting crucibles. 35
Fig. 32. Equipment for leaching plastic strips. 37
Fig. 33. Cascade dissolver for leaching solids. 38
Fig. 34. Hydrofluorinator for silica removal. 40
Fig. 35. Caustic scrubber for removing hydrofluoric acid from off-gases. 41
Fig. 36. Hydrofluorination system for silica removal. 41
Fig. 37. Equipment for dissolving melt from $K_2S_2O_7$-NaF fusions. 42
Fig. 38. Flow sheet for large-scale fusions of acid insoluble residues. 42
Fig. 39. Flow sheet for decontamination of graphite residues. 43
Fig. 40. Burning chamber for incinerator used through 1960. 45
Fig. 41. Burning chamber for incinerator used after 1960. 46
Fig. 42. Operation of contaminated residue incinerator. 47
Fig. 43. Stabilization of tetravalent plutonium. 50
Fig. 44. Flow sheet for separation of plutonium and uranium by precipitation of plutonium oxalate. 51
Fig. 45. Flow sheet for plutonium oxalate precipitation. 51
Fig. 46. Equipment for batch precipitation of plutonium peroxide. 53
Fig. 47. Procedure for precipitation of plutonium peroxide. 54
Fig. 48. Separation of plutonium and uranium by precipitation of potassium plutonium tetrafluoride. 55
Fig. 49. Flow sheet for separation of plutonium and thorium by fluoride precipitation. 55
Fig. 50. Flow sheet for scavenging of plutonium by ferric hydroxide carrier precipitation. 57
Fig. 51. Flow sheet for absorption of plutonium on cation-exchange resin from slag and crucible dissolver solutions. 59
Fig. 52. Ion-exchange column for HCl media. 60
Fig. 53. Flow sheet for cation-exchange column used for chloride removal. 61
Fig. 54. Flow sheet for general procedure for nitrate anion-exchange processing of plutonium. 62
Fig. 55. Ion-exchange column for plant operation. 63
Fig. 56. Distribution coefficients for certain elements in a nitrate anion-exchange system. 64
Fig. 57. Classification of elements by degree of sorption on Dowex-1X4 resin from a nitrate media. 65
Fig. 58. Fraction of impurity remaining on column during wash cycle. 67
Fig. 59. Flow sheet for chloride anion-exchange process. 68
Fig. 60. Flow sheet for extraction of plutonium by tri-n-butyl phosphate using packed columns. 70
Fig. 61. Solvent extraction system used from 1950 to 1959. 71
Fig. 62. Composition of typical feed solution for the solvent extraction system. 71
Fig. 63. Batch extraction system. 72
Fig. 64. Batch extractor for purifying concentrated column strip solutions. 73
Fig. 65. Flow sheet of process used in 1950 and 1951 for concentration of column product. 74
Fig. 66. Two-stage pump-mix unit. 75
Fig. 67. Flow sheet for pump-mix solvent extraction unit used in 1952-1955. 75
Fig. 68. York Scheibel mixer-settler extraction column. 76
Fig. 69. Flow sheet for mixer-settler column. 77
Fig. 70. Decontamination factors obtained upon extraction of plutonium in six-stage mixer-settler column. 77

Fig. 71. Mixer-settler column with Teflon disks in settling sections. 78
Fig. 72. Average concentration of impurities in the final nitrate product. 78
Fig. 73. View of current feed treating tank. 79
Fig. 74. View of typical solution storage tanks. 80

# PLUTONIUM PROCESSING AT THE LOS ALAMOS SCIENTIFIC LABORATORY

By
Eldon L. Christensen and William J. Maraman

## ABSTRACT

Plutonium-bearing residues created in the many research and development programs at the Los Alamos Scientific Laboratory are extremely varied in type of contaminant as well as in the nature of residue. The recovery and purification of the plutonium in these residues requires. therefore, the use of a number of processes. This report discusses the equipment and procedures for plutonium recovery ranging from the ether extraction and acetate precipitation used in 1943 to the anion-exchange systems now used.

## INTRODUCTION

The plutonium purification group at Los Alamos was created within the Chemistry Division in May 1943 when the division was assigned the job of purifying the plutonium received from other laboratories.[1, 2, 3] From May 1943 to March 1944 this group studied the chemistry of plutonium on the microgram scale. Not until February 1944, when the first material was received from the Clinton pile, was enough plutonium available to enable the group to work on the gram scale.[1, 2]

By March 1944 the research had led to the adoption of a purification process based on sodium plutonyl acetate precipitation and ethyl ether extraction. This process was used until the purification and recovery operations were transferred to DP Site West.

Research programs since then have led to the adoption of procedures for all phases of plutonium recovery and purification. This report discusses the development work since 1943 and application of the many procedures required to recover and purify the plutonium contained in the residues generated by the research. process development. and production activities of the Los Alamos Scientific Laboratory.

The discussion is divided into chapters on historical background. general plant facilities and standards. and each of the recovery and purification methods. The equipment and procedures now used are discussed in detail, with only brief references to superseded processes and equipment.

The experimental work which led to the selection of specific operating conditions is not discussed if the experimental program has been described in other LASL reports and documents given as references.

# Chapter 1. HISTORY

Research on methods for the purification of plutonium by the Chemistry Division was started in May 1943.[2] This research led to the adoption, in March 1944, of a purification procedure involving two sodium plutonyl acetate precipitations and two ethyl ether extractions;[3] the process did not, however, separate uranium from plutonium. This separation problem became serious when the plutonium had to be recovered from the uranium sulfide crucibles used by the metallurgical group.[2]

Research showed that precipitation of plutonium trioxalate would give a satisfactory separation from uranium if the reduction of plutonium was accomplished with HI.[1] The combination of this oxalate precipitation with a sodium plutonyl acetate precipitation and an ethyl ether extraction became known as Process "A". The steps in this process are shown in the flow sheet given in Fig. 1. This process was the basis for the design and construction of new production facilities at what is now called DP Site West.[4]

The potential loss of plutonium in purification by Process "A" led to the establishment of a recovery and concentration section. By September 1944 this section had developed several methods for the recovery and concentration of plutonium from purification residues so that the plutonium could be recycled.[5, 6, 7] The flow sheet for the recovery operations is shown in Fig. 2.

By the time purification and recovery operations were transferred to DP Site West in September 1945, the tolerances for light-element impurities in plutonium metal were relaxed and the chemistry of plutonium was well enough understood so that a new Process "B" could be adopted. This process differed from Process "A" in that the first oxalate precipitation and the sodium plutonyl acetate precipitation were eliminated.[2, 8] The flow sheet for Process "B" is shown in Fig. 3. When the purity of the incoming material was again increased it was found that only a single oxalate precipitation was required to attain the desired purity in the plutonium metal.[1, 2, 8] This precipitation was called Process "C", the flow sheet for which is shown in Fig. 4.

During the development of the purification chemistry, the need for recovery of plutonium from purification residues became greater and, as the metallurgical and chemical research programs expanded, more complicated. The flow sheet in Fig. 5 shows the major residue items and recovery methods used through December 1959.

The major types of residues currently received and processed, with methods now used for plutonium recovery and purification, are shown in Fig. 6. The product is a purified plutonium nitrate solution that is compatible with the processes used in the preparation of plutonium metal.

As shown in Figs. 5 and 6, many of the processes or operations are merely steps in preparing the feed for one of the purification systems. For example, the plutonium is currently removed from noncombustibles in the pickling operation with an $HNO_3$ leach. The $HNO_3$ leach solution is the product of this operation and is sent to one of the nitrate anion-exchange systems for concentration and purification.

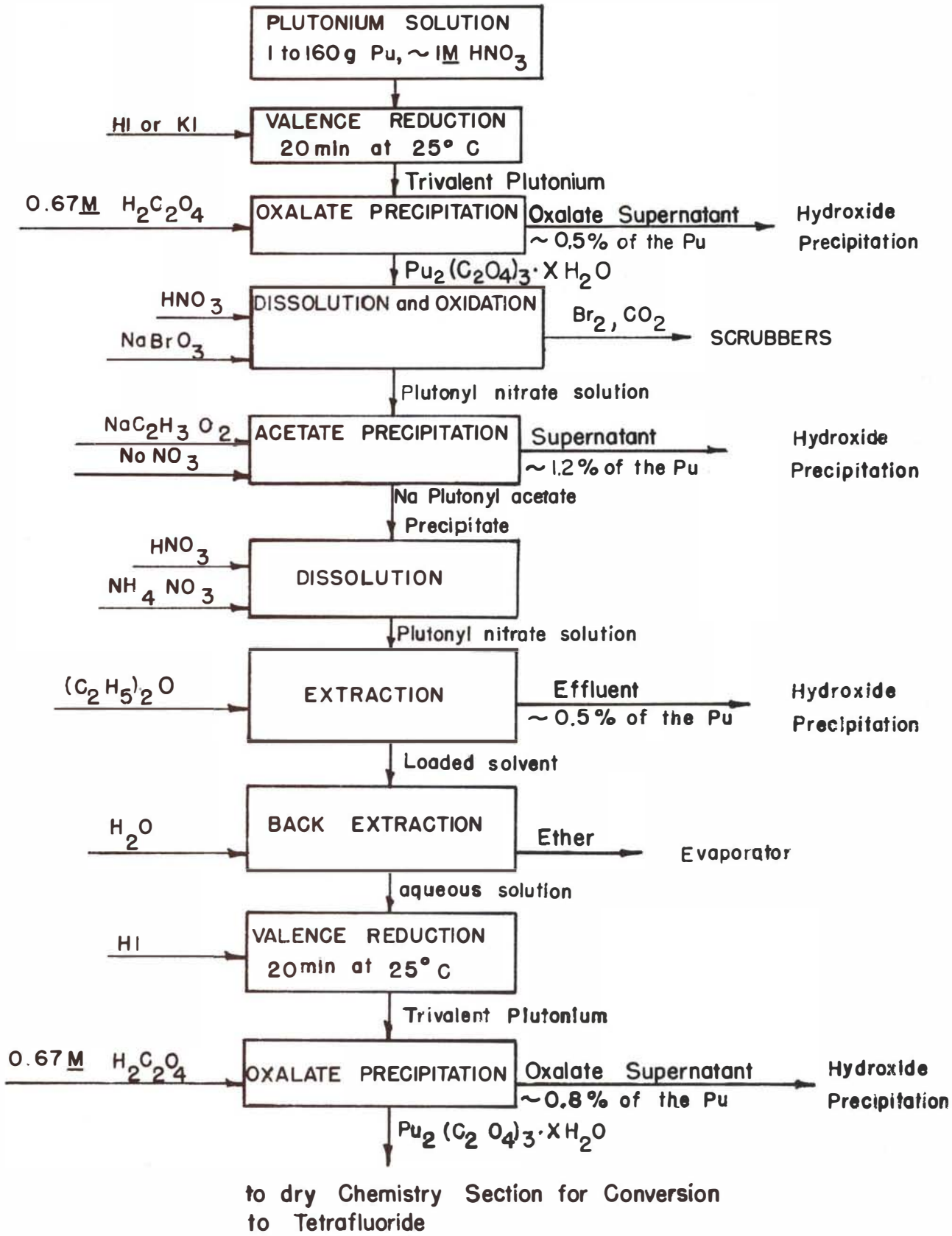


Fig. 1. Process "A" for plutonium purification.

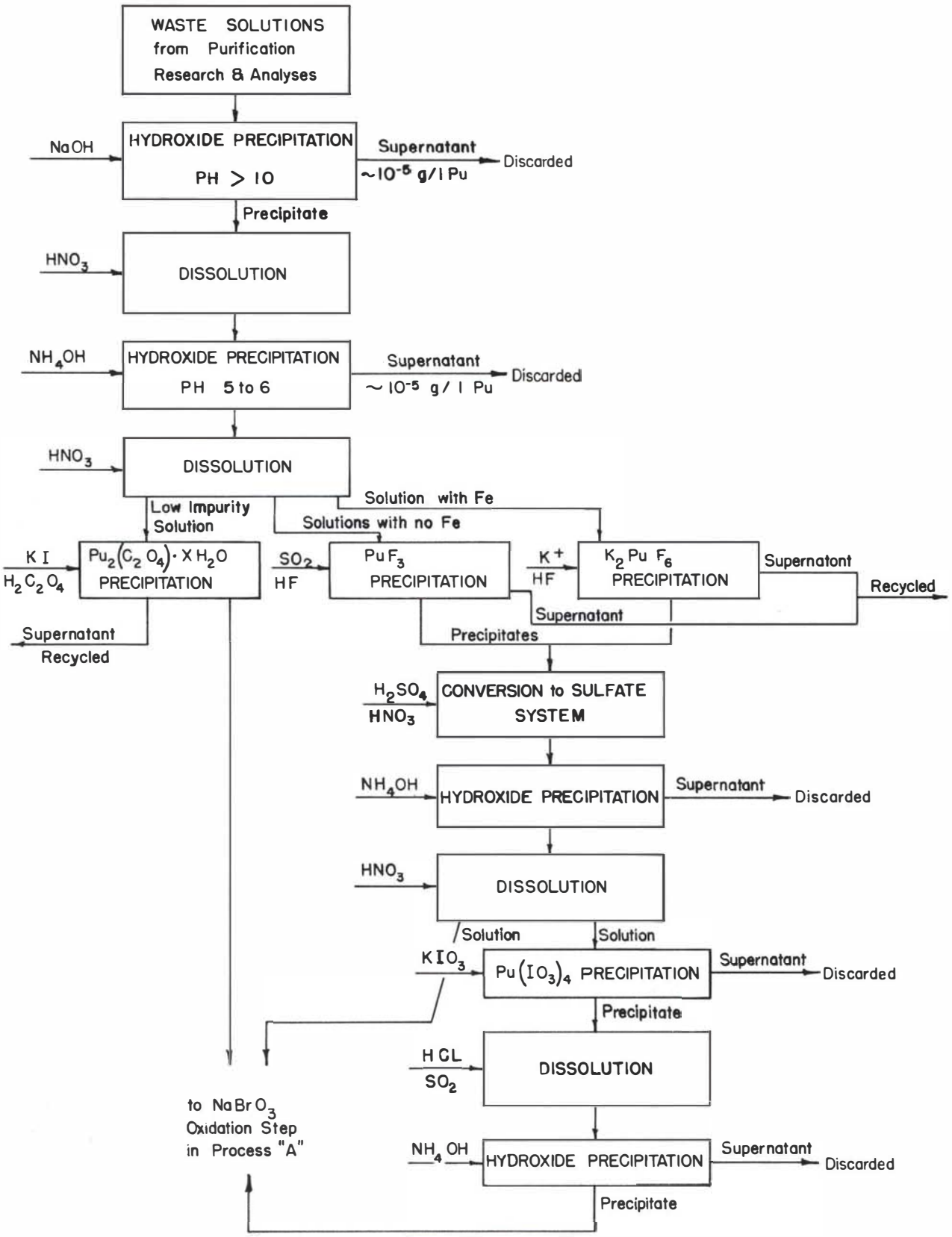


Fig. 2. Recovery flow sheet in 1944.

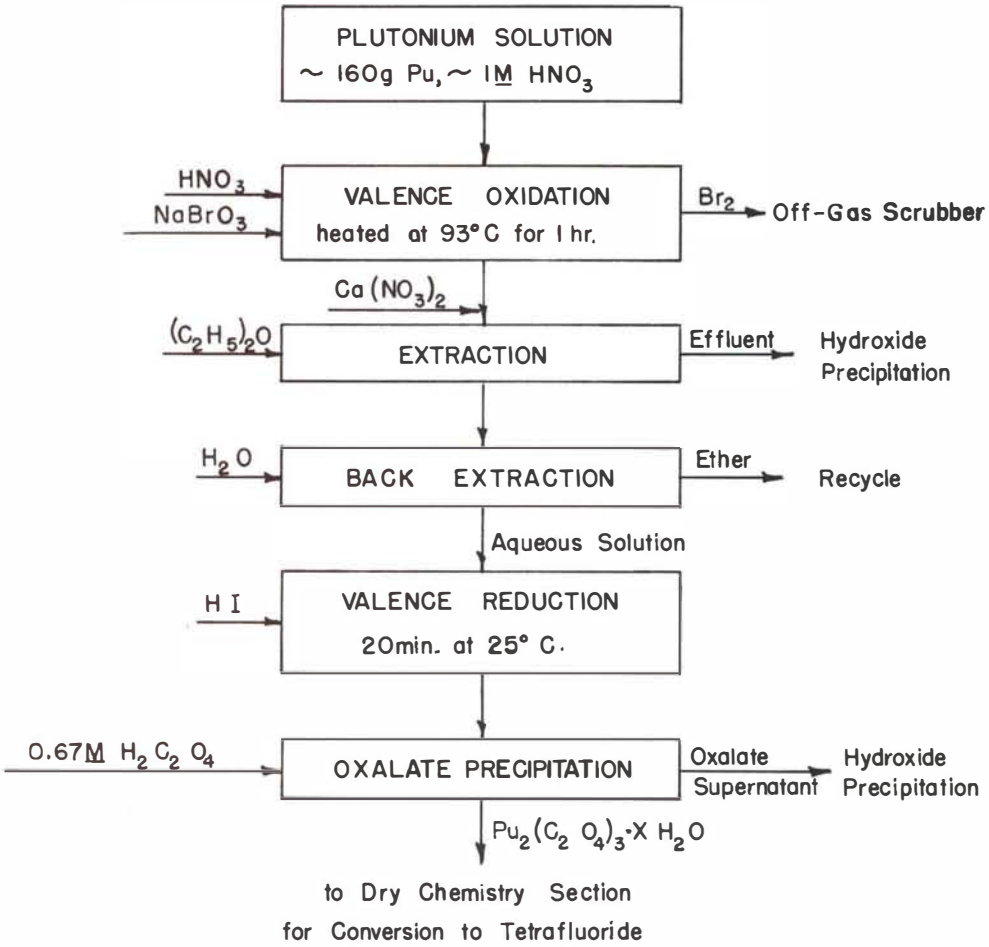


Fig. 3. Process "B" for plutonium purification.

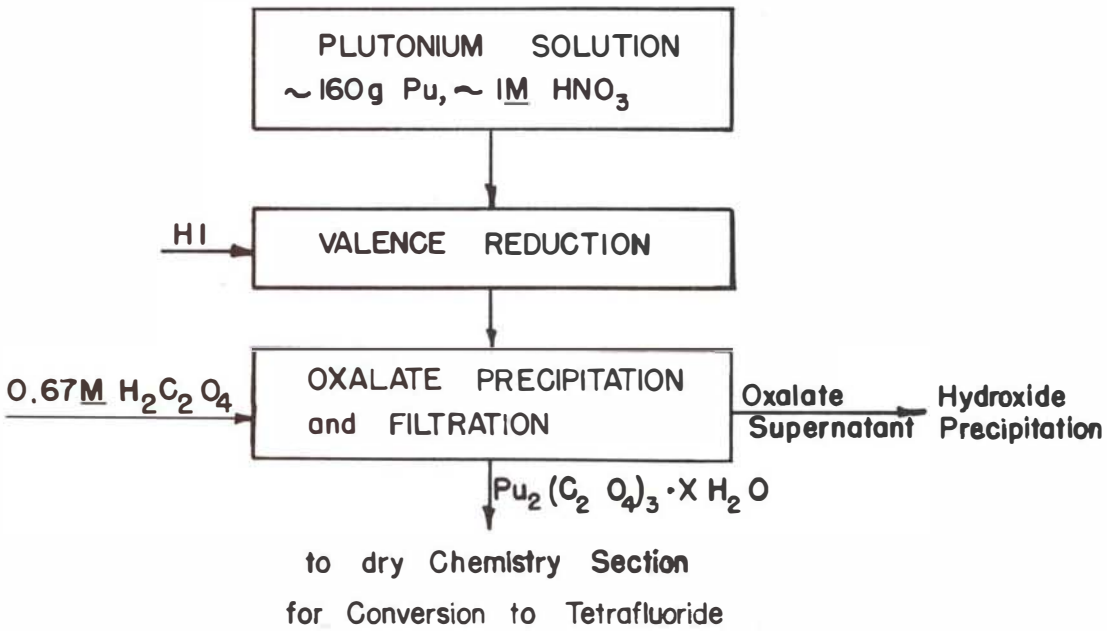


Fig. 4. Process "C" for plutonium purification.

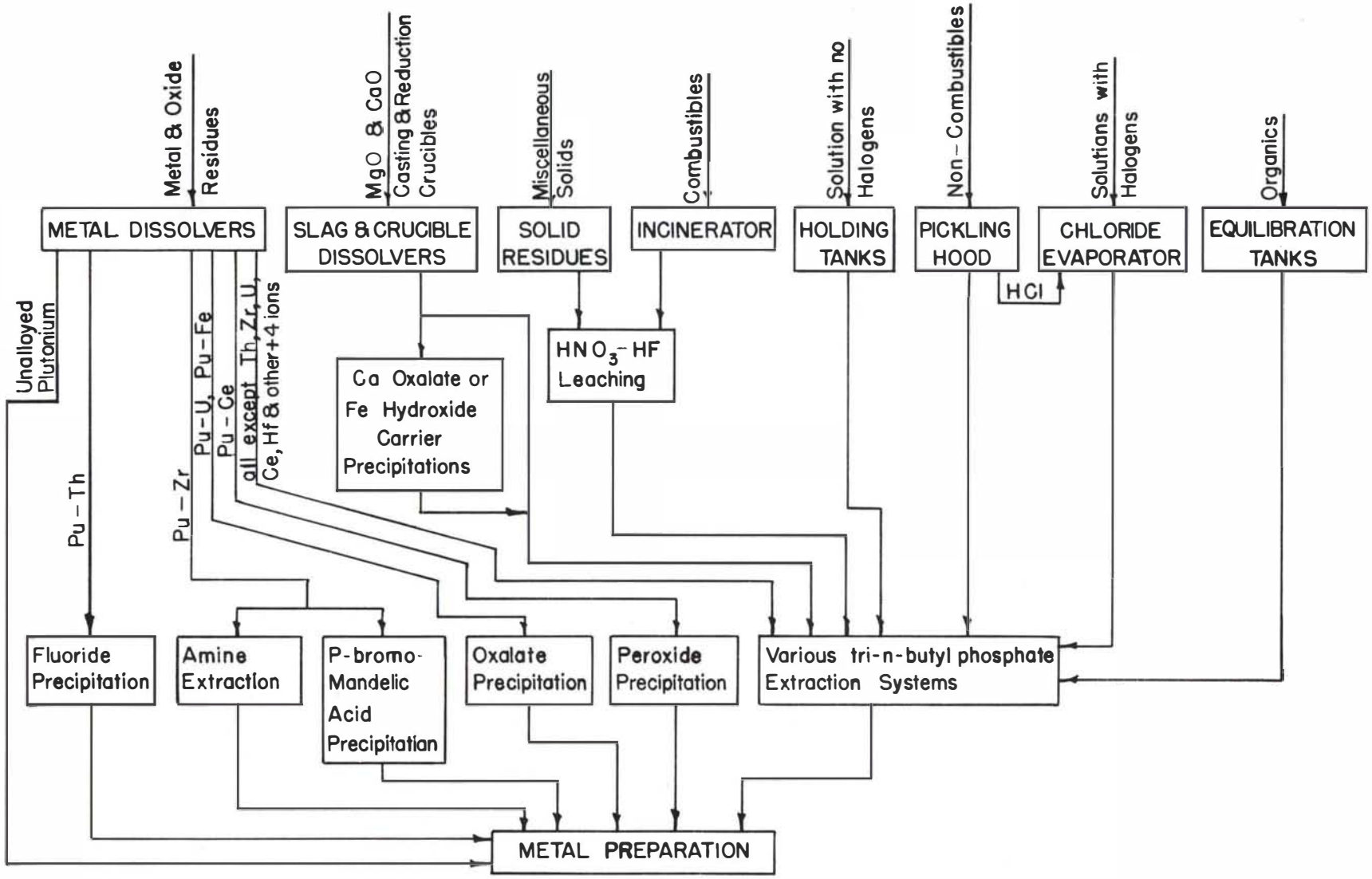


Fig. 5. Flow of material in recovery plant through 1959.

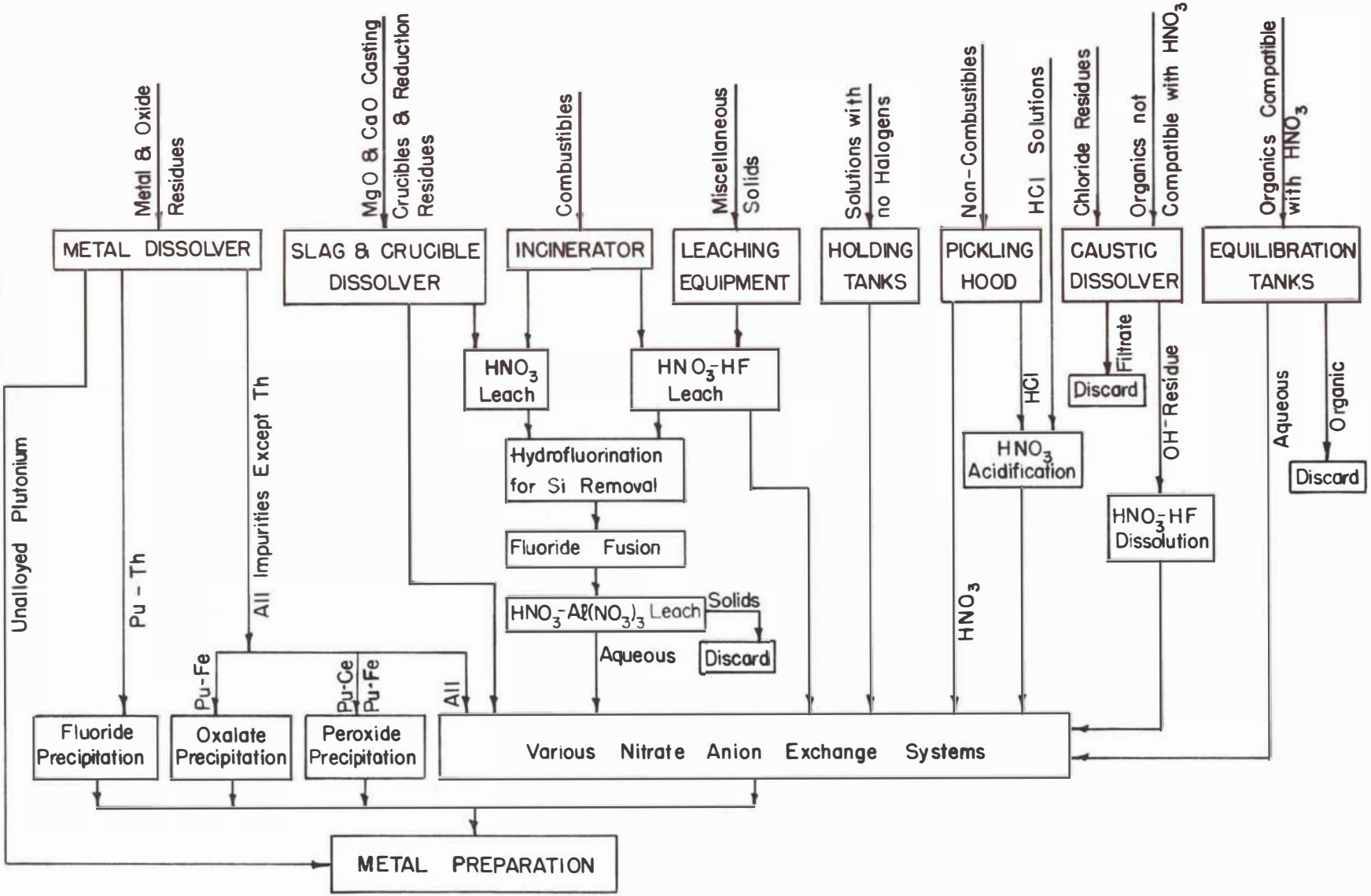


Fig. 6. Flow of material in present recovery plant.

# Chapter 2. GENERAL PLANT FACILITIES AND STANDARDS

## 2.1 Location of Facilities

The purification of plutonium solutions and the recovery of plutonium from purification residues was carried out in D Building in the original technical area from February 1944 to August 1945. At that time facilities were completed at DP Site West, a few miles from the original technical area, for processing large quantities of plutonium on a routine basis. The arrangement of buildings is shown in Fig. 7. The ether extraction facilities were in Building 2, oxalate precipitation in Build-3, dry chemistry for conversion of oxalate to fluoride in Building 4, and reduction of fluoride to metal and casting and machining of metal in Building 5.

Research and development efforts, along with engineering improvements, led to the consolidation of the plutonium recovery and purification processes in Building 2. The location of each recovery and purification process currently used is shown in Fig. 8.

## 2.2 Glove Box Design

During the first years of operation of the recovery section at Los Alamos, much of the plutonium work was done in open-face hoods. The apparatus shown in Fig. 9, for example, was used for the ethyl ether extraction of plutonium.[2] In 1945 it was felt that the variety of residues necessitated the use of open hoods for flexibility of operation and that the operators could be protected by special clothing and various types of respiratory equipment.[9, 10] By 1946, 9 of 15 workers in the recovery section had shown urine counts of >7d/min per 24-hr sample.[11] On this evidence it was decided to rely on equipment in glove boxes rather than seek perfect respirator protection for the workers.[4, 12] Therefore, glove boxes were designed and built to provide an isolated enclosure for each of the processes used in working with plutonium. The glove boxes shown in Fig. 10, for example, were used for the filtration of plutonium hydroxide. The recovery of plutonium from low-level waste solutions or reduction residues was performed in tank systems, an example of which is shown in Fig. 11. The dissolution of slag and crucible from metal reduction was carried out in the vessel shown at the extreme left of the picture. Hydroxide and oxalate precipitations were made in the large dry box shown at the far right.

Glove box design changed from year to year in an attempt to create a more spacious yet con-

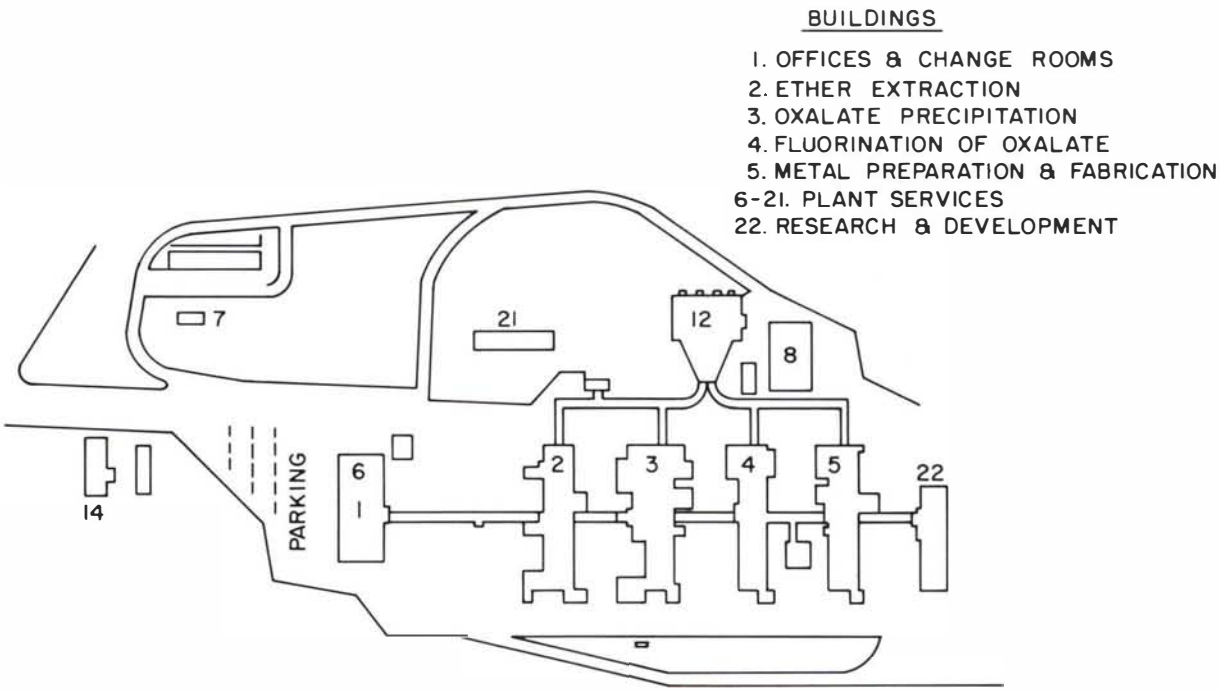


Fig. 7. General layout of DP Site West.

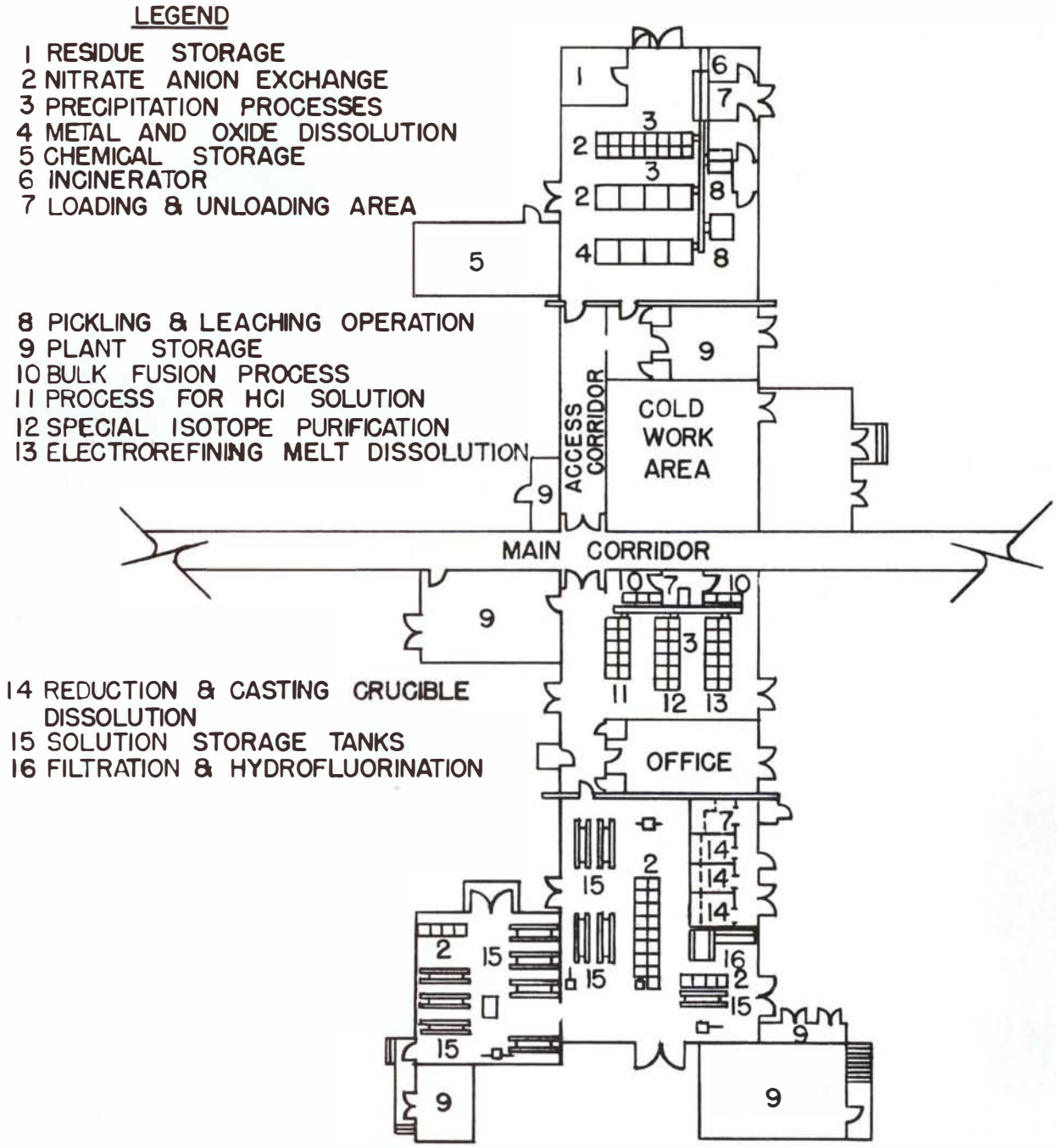


Fig. 8. Recovery facilities at DP Site West.

venient working enclosure and had, by 1954, changed to the style shown in Fig. 12. These were constructed of standard sections which could be arranged in any desired configuration of modules.[13]

In wet chemistry areas, it was difficult to maintain the integrity of the gasket at each floor joint and external surfaces were difficult to decontaminate in the event of a radioactive spill.[14] These factors led to the design shown in Figs. 13 and 14. The design remains basically the same for all applications but may be easily modified for special applications. The self-locking weather strip window gasket gave such a tight seal that the same window installation could be used on inert atmosphere enclosures.[15]

Constant air flow is maintained in the glove boxes by drawing room air through absolute filters

at the rate of 16 cfm for each 25 $ft^3$ of glove box space. The air is exhausted through absolute filters to the plant process ventilation system. A pressure differential of 0.4 to 0.8 in. of water is maintained between glove box atmosphere and room atmosphere to provide an inward flow of air if a leak occurs.

The low ambient humidity at Los Alamos made it unnecessary to provide an inert atmosphere throughout the plant. A few glove boxes, such as the one used for processing plutonium hydride, were designed so that an inert atmosphere of helium could be provided. In addition, the compartments of the glove boxes used for weighing and dissolving plutonium metal and oxide are equipped with helium lines. In the weighing compartments, the helium line is connected to the top of a bell jar so that, in the event of a plutonium fire, the bell jar can be placed over the burning mass and thus quickly provide an inert atmosphere. In the dissolving compartments, the helium lines provide a gas flow to sparge the solution and at the same time provide an inert atmosphere in the dissolving vessel.

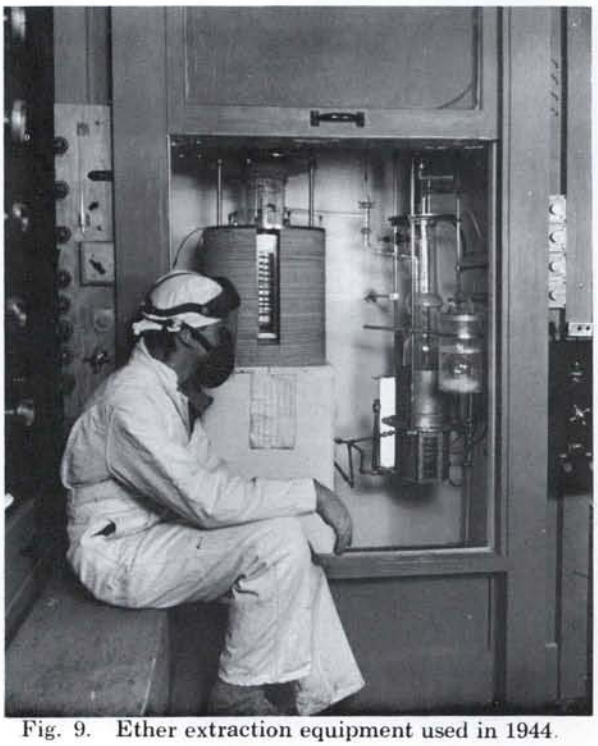

Fig. 9. Ether extraction equipment used in 1944.

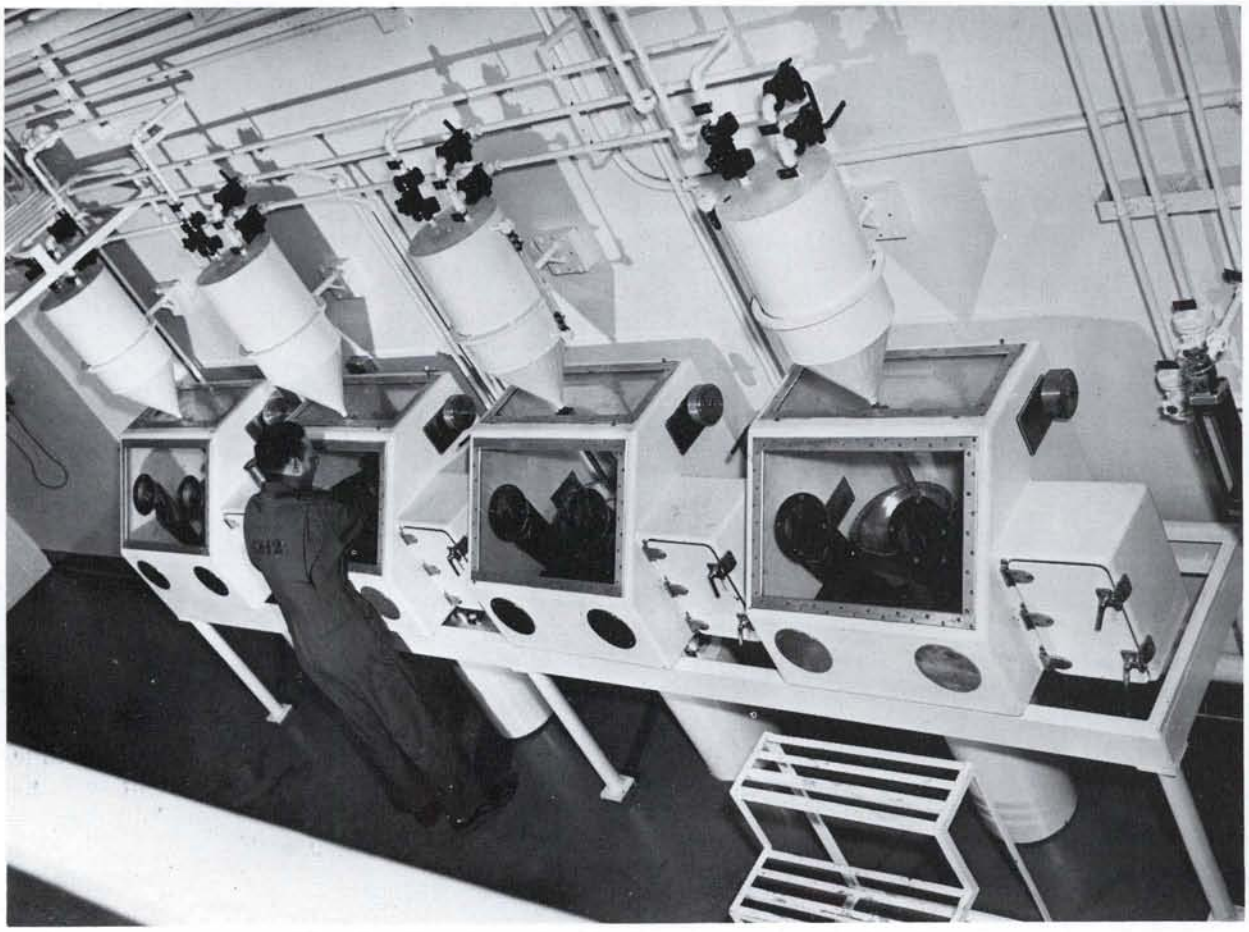

Fig. 10. Glove boxes for filtration of plutonium hydroxide.

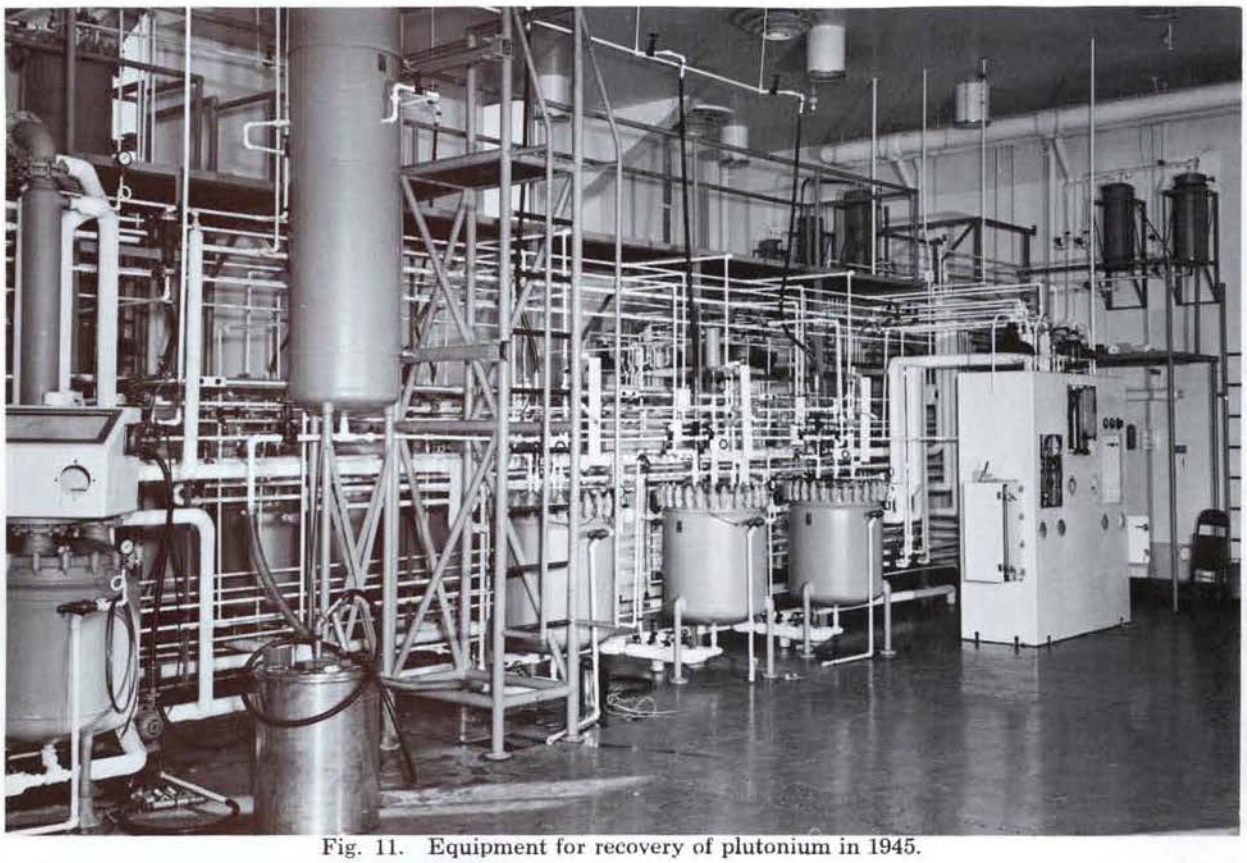

Fig. 11. Equipment for recovery of plutonium in 1945.

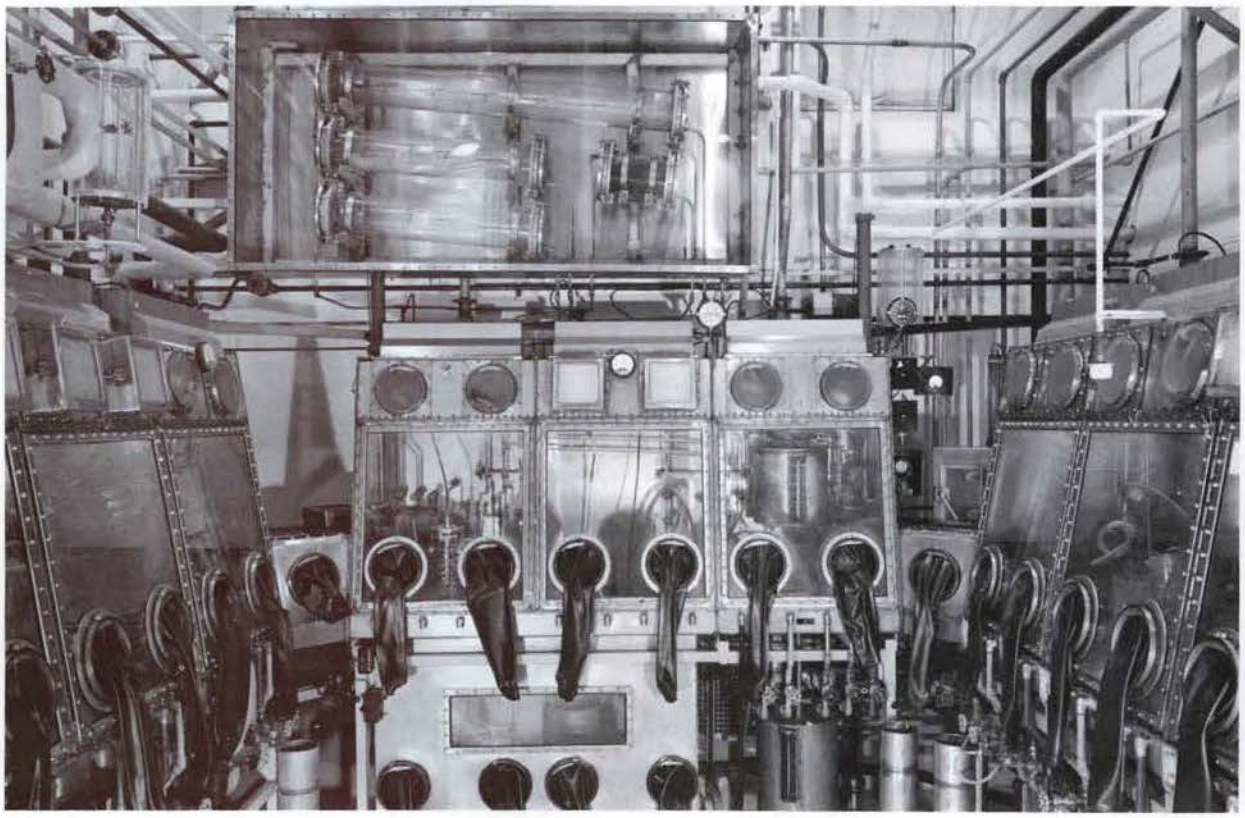

Fig. 12. Typical glove box construction during 1954-1959.

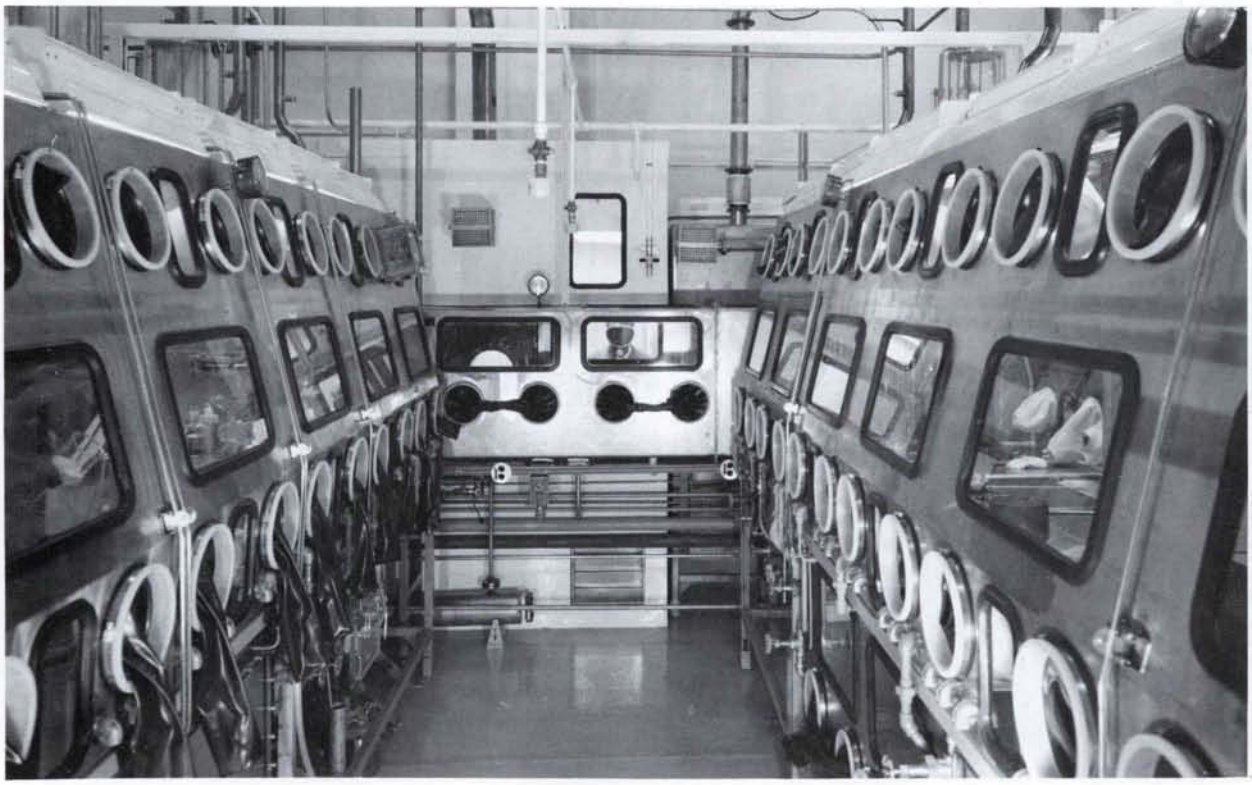

Fig. 13. Typical glove boxes in present plant.

Each air exhaust line on the glove box is equipped with a fire detector. Neither the glove boxes nor the processing and storage rooms are equipped with automatic sprinkler systems because of criticality and contamination considerations.

## 2.3 Nuclear Safety Control

During the early years of operation, the nuclear safety program was based solely upon administrative control of batch sizes. The need for controls other than administrative becomes more acute when the chemical process being used deposits small amounts of plutonium on equipment surfaces at an irregular rate. Such deposits can be periodically removed, but inherent in this approach is the possibility that solids containing large amounts of plutonium can form a critical mass when removed and collected.

It was just such a situation that led to a criticality incident at Los Alamos in 1959.[16] The hydrolysis products of tri-n-butyl phosphate (mono- and dibutyl phosphate) have a great affinity for plutonium and tend to precipitate from acid solutions. Being gummy in nature, the hydrolysis products tend to cling to the walls of the process vessels. The operating procedure for this system called for filtration of all plutonium-bearing solutions before combining them with other solutions for processing. Thus the solids, containing an unknown quantity of plutonium, would be removed in safe-geometry equipment. However, the solids were allowed to come in contact with fresh kerosene where they were dissolved, bringing the organic phase to a plutonium concentration of 20.4 g/liter, several orders of magnitude higher than expected. This layer was subcritical when undisturbed but became critical when the layer was deformed by activation of the stirrer in the tank.

Prior to the incident, the decision had been made to convert to geometrically favorable equipment for nuclear safety control. Design and testing of new equipment which had been started was accelerated after the criticality incident. The operation of the crucible dissolvers and the solvent extraction columns was discontinued pending the completion of design, fabrication, testing, and installation of the new equipment.

All equipment has now been replaced with geometrically favorable equipment or has been poisoned by the addition of high boron-content glass Raschig rings. Since the new equipment is not ever-safe but only geometrically favorable, procedural control must still be employed as part

of the nuclear safety program.

Gamma-sensing elements have been installed throughout the plant to detect and warn of any significant increase in the radiation background level.[17] The warning is given automatically by the sounding of electric horns which can be triggered only by coincident alarm signals from two sensing devices. This coincident connection reduces the probability of false alarms due either to equipment failure or to radiation sources being brought within detection distance of one sensing head. Individual process equipment items and safety factors involved are discussed in Chapter 3.

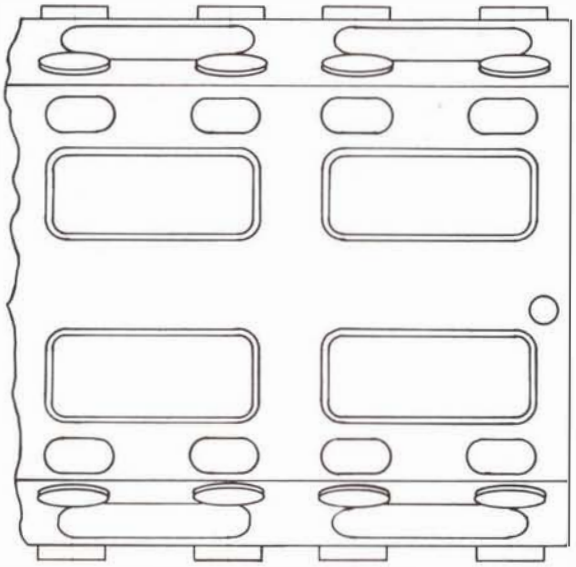

## 2.4 Contamination Control

The retention of plutonium in the body may produce bone diseases (including cancer) many years later.[18] Because the primary mode of entry of plutonium into the body is by inhalation, the process equipment and rooms have been designed to minimize the release and spread of airborne contamination. The processing of plutonium is done inside glove boxes already discussed.

At Los Alamos, the room air is sampled by continuous samplers operating on a 10-min cycle and by a central vacuum system pulling room air through filter papers, located in 10 to 20 stations, which are counted the following day in fixed counters. The continuous samplers respond only to airborne activity that is more than 100 times the maximum permissible concentration of 4.0 d/min/m$^3$. The continuous air samplers are relied upon to give an alarm only in the event of an accidental release of a large amount of airborne activity. The filter papers collected from the 10 to 20 stations of the central vacuum system in each room are relied upon to show the amount of airborne activity originating from small leaks in the process equipment. Even though these samples are 24 hr old when counted, they nevertheless provide a basis for determining if the equipment is free of leaks and if the prescribed procedures are being followed for introducing items into and removing them from the glove boxes and for changing the gloves on a glove box.

Objectionable amounts of airborne activity may also originate from contaminated glove box and room surfaces. A concentrated effort is made

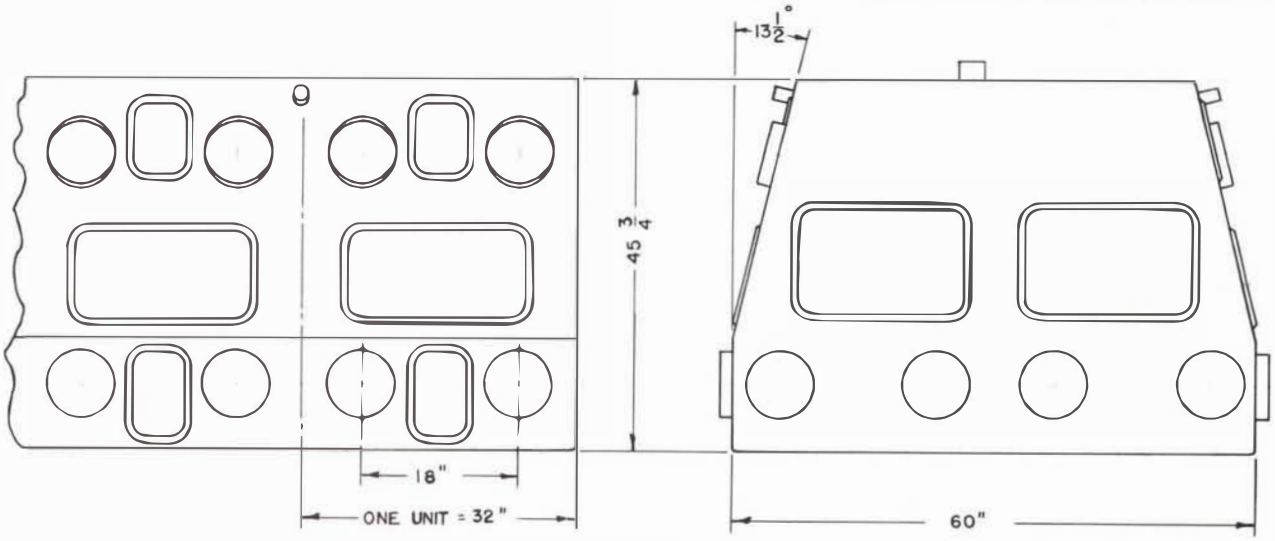


Fig. 14. Dimensions of glove boxes shown in Fig. 13.

to keep all surfaces clean, allowing a maximum direct $\alpha$ count of 500 c/min/60 $cm^2$ and a maximum swipe count of less than 100 c/min. The surface surveys are made with a portable proportional meter which has an external air-filled probe with a detection surface of 60 $cm^2$. Areas in which the surface contamination exceeds the tolerance level are decontaminated using an applicable procedure listed in LAMS-2319.[19] Sodium citrate, sodium EDTA, $HNO_3$, $HNO_3$-HF, and HCl are some of the most frequently used decontamination solutions.

Surface surveys are made daily on the gloves, glove boxes, sample ports, unloading devices, etc. The remaining areas are spot checked daily but are surveyed at least once a week.

## 2.5 Storage of Nuclear Materials

In the storage of plutonium residues, consideration must be given to fire hazards, possibility of interaction between solution and metal residues in the event of container breakage, containment of contamination, selection of storage containers so that the recovery problem will not be increased in the event of a leak, and especially the possibility of accidentally forming a critical assembly. Consequently, the following storage regulations were established:

1. All items must be stored in steel containers. (Liquid residues in glass or plastic bottles must be placed in stainless steel containers.)

2. Metal and solution residues must be stored in separate rooms.

3. Residues must be packaged so that the contamination is completely contained. (All containers of solution must be vented.)

4. The containers selected for the storage of an item must be compatible with the physical qualities of the residue.

Examples:

a. Liquid residues containing uncomplexed fluoride should not be stored in glass.

b. Metal residues should not be stored in plastic bags, especially if the bags are sealed with a pressure-sensitive tape. Metal residues generally have many sharp edges which may cut the plastic bag and release contamination. Even if the bag is not cut, the metal pieces will become embedded in the bag so that recovery of the plutonium is no longer a surface problem.

5. The residues must be packaged and stored so that there are:

a. No more than 1 kg of plutonium metal per container; no more than one container per cubic foot of storage space.

b. No more than 500 g of plutonium in solution in any one container; no more than 250 g of plutonium in solution per cubic foot of storage space.

All shelves and floors of storage areas are divided by partitions into units 1 ft square. A minimum distance of 2 ft is required between shelves for storage of liquid residues and 1 ft for metal residues.

# Chapter 3. DISSOLVING PLUTONIUM METAL, ALLOYS, AND CASTING SKULLS

## 3.1 Development of Equipment and Procedures

Experimental work from March to August 1944 showed that plutonium metal could be dissolved in the common mineral acids HCl, HI, HBr, and $HNO_3$-HF mixture.[5] Of these, HCl was then considered to be the best for the dissolution of plutonium metal and was used almost exclusively during 1945 and 1946, until research suggested that either HI or $HNO_3$-HF would be most suitable for a plant procedure.[5, 10]

Attempts were made in 1946 to recycle metal turnings and scrap by direct hydrofluorination, but the products obtained did not give good plutonium metal yields with bomb reduction by calcium metal.[20]

The method selected for large-scale processing, which started in 1947, used HI as the dissolving medium since the process for the preparation of plutonium metal was based on the precipitation of the plutonium trioxalate.[21] By using an excess of HI, it was expected that the dissolution would be complete and that the resulting solution would have the plutonium in the trivalent state, ready for precipitation without a valence adjustment step.

The main steps in the procedure were the addition of enough water to cover the plutonium metal in the dissolution vessels, the slow addition of 47% HI, and a 2-hr reflux. The disadvantages of this method, including the severe corrosion of equipment and frequent violent reactions associated with ignition of the plutonium metal, led to further investigations and eventually to the decision in 1951 to use the $HNO_3$-HF system.[22] The dissolution of plutonium metal in HCl proceeds much more smoothly than in an $HNO_3$-HF mixture, but HCl has the disadvantages of corroding the stainless steel equipment and being unable to dissolve the $PuO_2$ formed during storage or by exposure to air.

Experiments with other acids for the dissolution of metal resulted either in incomplete reactions or uncontrollable reactions in which the plutonium often ignited, such as when HI was used. For example, attempts to dissolve plutonium metal in 85% $H_3PO_4$ resulted in only 34% and 94% of the plutonium in solution after 5 hr at 100°C and 200°C, respectively.[23]

Equipment for the dissolution of plutonium metal by refluxing in an $HNO_3$-HF mixture has been the subject of much development work. Up to January 1953, dissolutions were made in glass vessels of various design, ranging from a 3-in.-diameter tube to a standard 5-liter round-bottom distilling flask.

Because the dissolving procedure included a time-consuming step for cooling and filtering the product, it was suggested that the time required to complete this operation might be reduced by the use of a combination filter and dissolver. The first combination unit was a 3-in.-diameter Pyrex glass tube with a sintered glass filter disk sealed in the tube near the lower end.[24] In this equipment the metal to be dissolved was charged in the upper chamber and a flow of carbon dioxide was introduced into the lower chamber. The dissolving acid was added to the upper chamber and kept there by the $CO_2$ pressure in the lower chamber.[24] After the dissolution cycle had been completed, the flow of $CO_2$ could be stopped and the valve leading to the vacuum system opened, thus immediately converting metal dissolution equipment to vacuum filtration apparatus.

The main disadvantages of this system were the corrosion of filter elements by the acid media for dissolving Pu metal, and the plugging of the filters by insoluble fines. Experiments with various materials, such as stainless steel,[25] fluorothene,[26] chromium nitride,[27] and platinum[28] did not result in an acceptable design. Therefore, it was decided to return to the use of the modified 5-liter round-bottom flask heated by a glass-col mantle.

## 3.2 Dissolution of Plutonium Metal

The dissolution of plutonium metal by $HNO_3$-HF is now accomplished in the equipment shown in Fig. 15. These vessels are made by adding a 102/75 ground-glass ball joint to a standard 5-liter round-bottom flask. The large ball-joint opening allows the easy loading of tangled plutonium turnings and the easy removal of all residues after the dissolution cycle has been completed. These glass vessels are normally used for at least 40 dissolvings before corrosion by vapor phase fluoride necessitates replacement.

The glove box in which these vessels are used is divided into four chambers by stainless steel

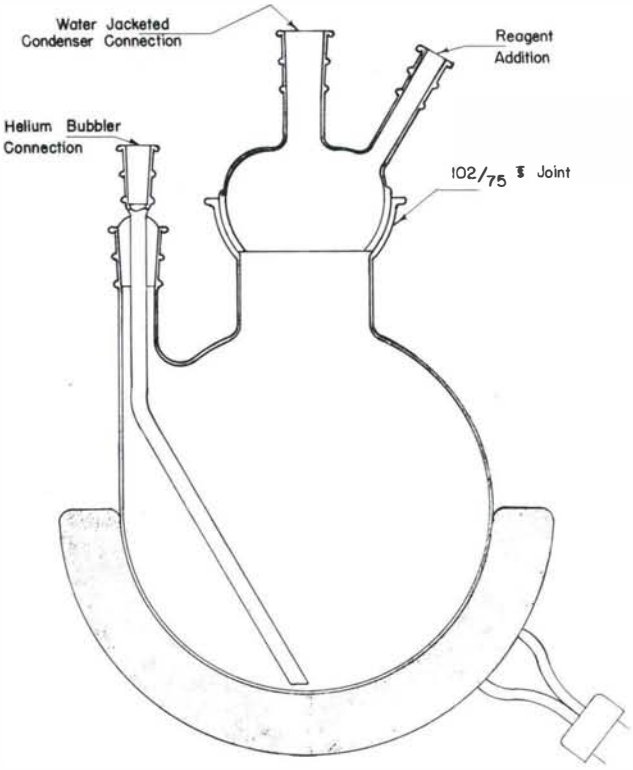


Fig. 15. Vessel for routine metal dissolution.

partitions. A cutaway drawing is shown in Fig. 16. With this compartmentation, an accident or explosion in one chamber should have little effect on the equipment in other chambers.

Because the 5-liter vessels have a poor geometry as far as criticality is concerned. procedural control is relied on to prevent nuclear incidents. These procedural controls require that no more than 500 g of material (gross weight) may be loaded into any one vessel and that no more than two such 500-g batches may be present at the same time in any one dissolving chamber. Thus, even if both batches were released to the floor of the glove box, the resulting layer of solution would be subcritical because the solution would form a slab that would be thinner than the ever-safe dimension. If additional water was added accidentally. the plutonium concentration would be diluted to a value less than the minimum amount which can be made to go critical before the ever-safe slab dimension could be exceeded.

The process using $HNO_3$-HF in glass vessels has many advantages: reaction can be observed. oxides will be dissolved, resulting solutions are

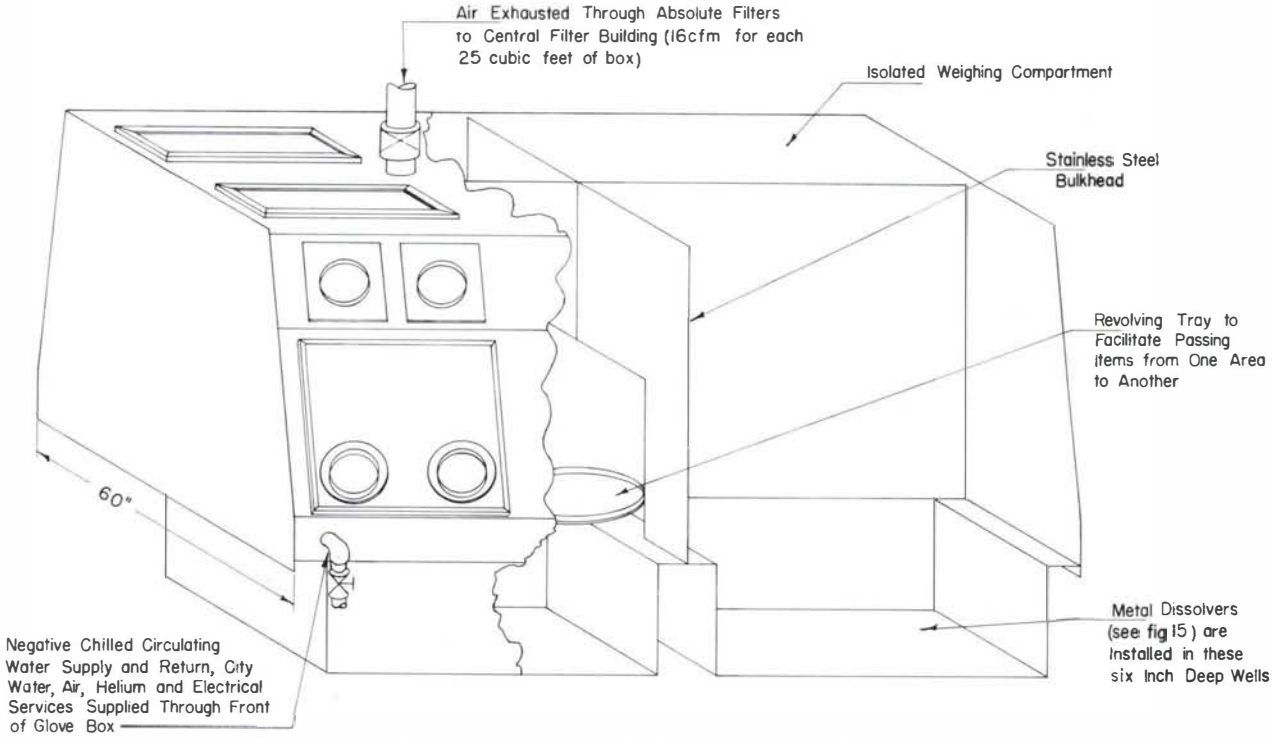


Fig. 16. Design of skull dissolver glove box.

compatible with stainless steel equipment, and the equipment can be easily cleaned to permit frequent changes from one type of residue to another.

The procedure for the dissolution of unalloyed plutonium is given in the flow sheet shown in Fig. 17. The addition of 1250 ml of 15.6*M* $HNO_3$ and adding the 47% HF in milliliter increments can usually be accomplished in less than 2 hr. No external heat is applied to the vessel during these additions. The solution is sparged throughout the dissolving procedure with 10 psi of helium at a flow rate such that any oxidized material is kept suspended. This flow of helium also provides a partially inert atmosphere in the dissolver. Because fine plutonium turnings may be very pyrophoric, the danger of fire is always present. The inert atmosphere aids in the control or prevention of fire.

The rate of addition of the HF is governed by the physical state of the plutonium metal; that is, the finer the turnings, the slower the rate of addition. For example, if the plutonium is in massive chunks, all the HF may be added at once. When the HF is added to fine turnings, however, exothermic dissolution of plutonium metal starts almost immediately and the rate of addition must be slow enough to control the rate of dissolution. After all of the HF has been added, the reaction will slowly subside. When dissolution of the plutonium metal has stopped, external heat is applied to bring the mixture to a reflux temperature of about 105°C and the solution is refluxed for 2 hr to dissolve any massive plutonium metal remaining as well as any plutonium oxide present. At the end of that time the water-cooled condenser is moved from the reflux position to the distillation position and the solution is concentrated to 600 ml. The solution is then cooled, filtered through a medium sintered glass frit, stirred, and sampled for analyses.

The solution, containing between 370 and 390 g of plutonium, is then transferred to a 2-liter polyethylene bottle using the transfer device shown in Fig. 18. The transfer device allows the external surfaces of the bottle to remain uncontaminated, and the product can be transferred to metal preparation with less risk of spreading contamination.

The residue from the filtration of the product is weighed and stored until 400 g of residues have been collected. These residues are leached three times with 12*M* $HNO_3$-0.05*M* HF and transferred to the $F^-$ fusion system (see Sections 4.4 and 6.5) for further processing. The filtrate and wash solutions are transferred to an anion-exchange system for purification. The distillate is sampled for plutonium analysis and transferred to the crucible processing system for removal of plutonium by one of the ion-exchange systems.

## 3.3 Dissolution of Plutonium Casting Skulls

Casting skulls remaining after pouring molten plutonium into molds are composed of some plutonium metal, its oxides, and many impurities. These skulls often tend to be extremely pyrophoric. The early practice of packing these pyrophoric residues in sealed containers made the handling of casting skulls even more difficult. Varying amounts of water vapor sealed with the skulls during the canning operation led to oxidation of the plutonium metal remaining in the skull. This oxidation resulted in the formation of a black powder, often referred to as a suboxide of plutonium, which would ignite almost explosively when the can was opened. This problem was solved by either burning the skulls to the oxide or by sealing the cans under an inert atmosphere. However, even skulls that were stored in an inert atmosphere have sometimes ignited after the final HF has been added and the initial exothermic reaction has completely subsided. Those skulls that tend to ignite readily are deliberately ignited in $Al_2O_3$ boats under controlled conditions. The resulting oxide can be processed without risk of fire. The procedure for the dissolution of $PuO_2$ is given in Section 4.4.

If the skulls appear to be relatively stable to air oxidation and self-ignition, they are processed in the same manner as the alloy from which they originated. The disposition of the resulting product is governed by the type of impurities present. For example, if the skull came from the casting of unalloyed plutonium, the dissolution product can be filtered and sent to metal preparation for necessary purification by the precipitation of plutonium peroxide.

## 3.4 Dissolution of Plutonium-Cerium Alloys

Included in the category of plutonium-cerium alloys are ternary alloys such as plutonium-cerium-cobalt alloys. If the cerium content is less than 1 wt %, the alloy can be dissolved using the procedure for unalloyed plutonium (Section 3.2) or for plutonium-iron alloys (Section 3.7). If the cerium content is greater than 1 wt %, the preferred method is to convert the alloy to the oxide by heating it in an $Al_2O_3$ or stainless steel crucible in

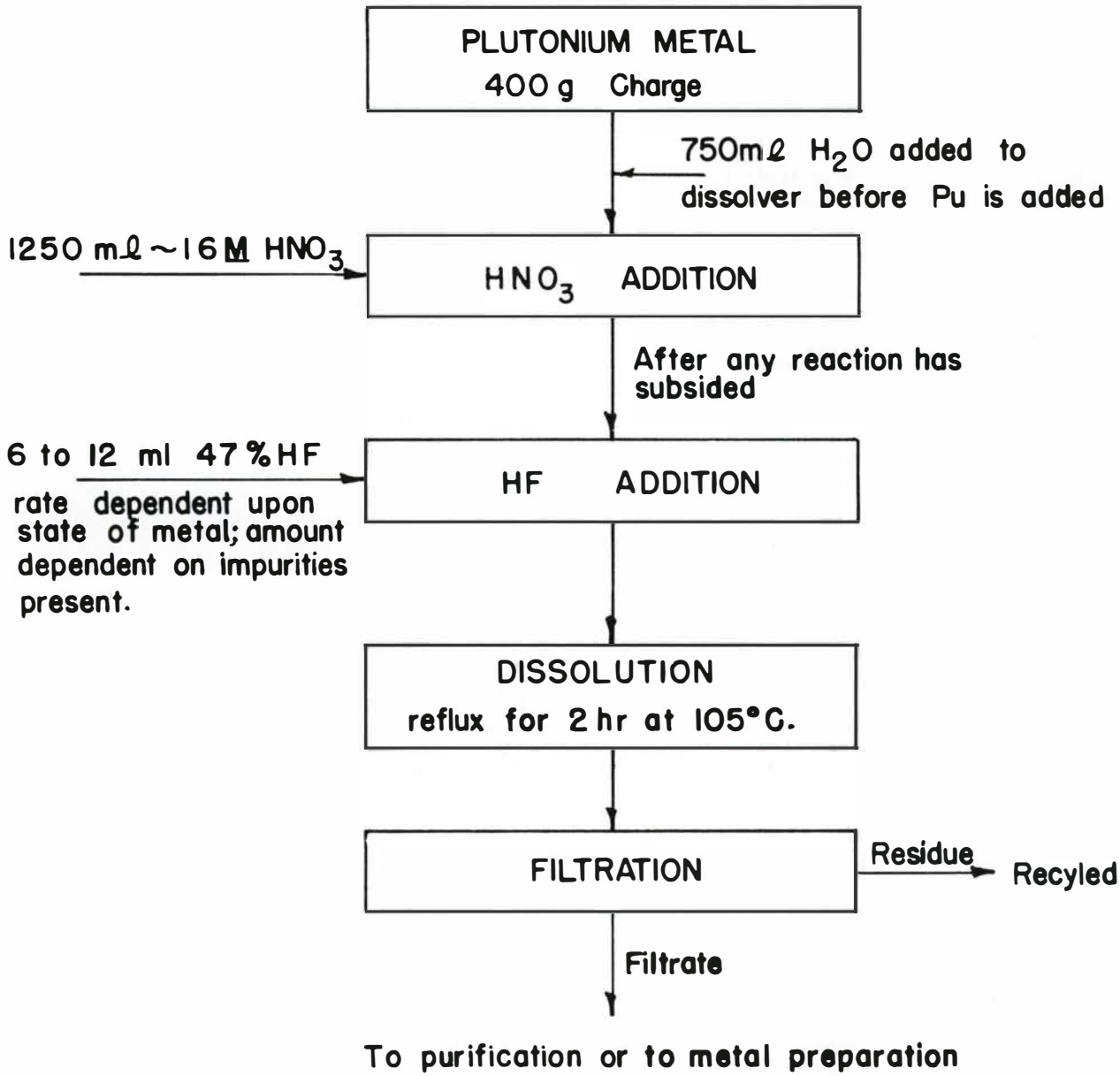


Fig. 17. Flow sheet of process for dissolving plutonium metal.

a muffle furnace at 500°C. The unpackaging, weighing, and transfer of alloy residues is done in an inert atmosphere. The alloy may have been packaged in large enough pieces or in an inert atmosphere sufficient to prevent oxidation, but it should be treated as if it were in its most pyrophoric condition until it is definitely known to be otherwise.

Once the alloy has been placed in the container for burning and the container placed in the furnace, air can be introduced at such a rate as to maintain the desired rate of oxidation. The oxide can then be safely dissolved using the procedure given in Section 4.4. Complete dissolution is not usually attained in one cycle and the residue must be recycled. The second leach, however, results in complete dissolution. The dissolver solutions are filtered, analyzed for plutonium, and purified by either precipitation of plutonium peroxide or by sorption of plutonium on a nitrate anion-exchange column.

A less preferable process is to add the alloy in 20-g increments to 1500 ml of 4*M* $HNO_3$ that has been heated to ~90°C. This dissolution method uses the same 5-liter glass vessel with heating mantle as described in Section 3.2. The

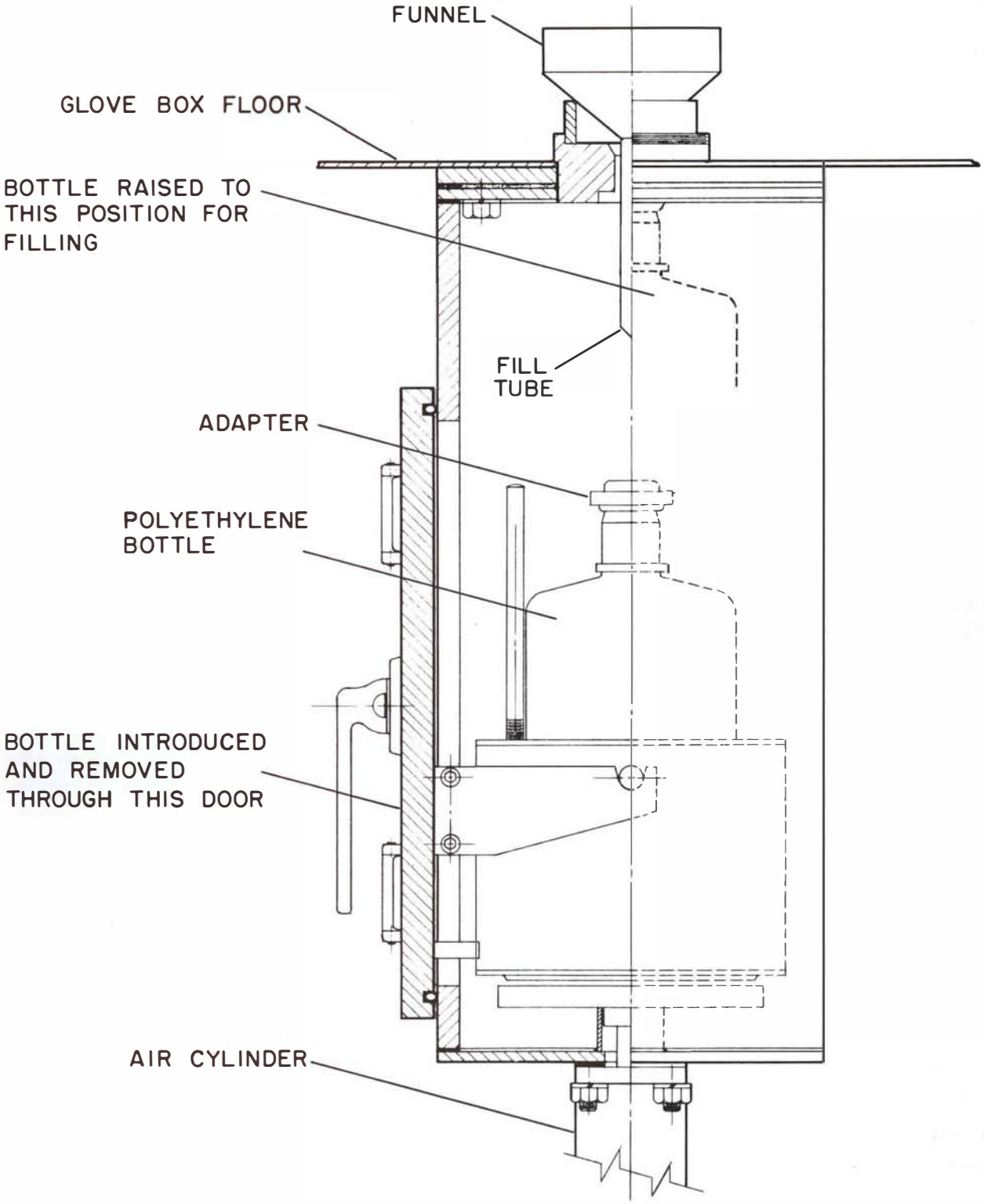


Fig. 18. Device for removing plutonium solutions from glove boxes.

solution is sparged continuously with 10 psi of helium during the addition of the 20-g increments of alloy. The addition of the next increment of alloy is not made until the exothermic reaction following the previous addition has subsided. Concentrated $HNO_3$ is added as necessary to keep the $HNO_3$ concentration near $4M$ to disperse the foam that forms if the $H^+$ concentration drops below $0.2M$. If the acid concentration exceeds $4M$, the reaction will become so violent that the metal may ignite.

After all the metal has been added in 20-g increments, the applied heat is increased so that the mixture will reflux at a solution temperature of ~105°C. When the mixture has refluxed for ~1 hr, all the cerium will have dissolved but only part (~10-20%) of the plutonium will have gone into solution. Since the dissolving solution is, at this point, $<4M$ $HNO_3$ and since it does not contain any $F^-$, longer reflux periods will not appreciably increase the dissolution of the plutonium because, at this point in the process, the plutonium is present mainly as the oxide. The condenser is then turned to the distillation position and the solution is concentrated to ~700 ml. When the solution has cooled to ~80°C, 800 ml of $15.6M$ $HNO_3$ and 5 ml of 47% HF are added. The condenser is then rotated to the reflux position, external heat is applied, and the mixture is refluxed for 2 to 4 hr.

After this reflux period, the mixture is allowed to cool to room temperature. The slurry is filtered through a medium sintered glass frit, using $0.1M$ $HNO_3$ as the wash solution to minimize peptization of the oxide in the residue. The filtrate is transferred to either a nitrate anion-exchange system or to a peroxide precipitation system for separation of the plutonium and cerium. Both processes give satisfactory products in which the cerium content is <20 ppm, based on plutonium. These processes are discussed in Sections 8.4 and 8.6.

## 3.5 Dissolution of Plutonium-Aluminum

If the aluminum content is less than 1 wt %, the material is processed as if it were unalloyed plutonium; that is, it is dissolved in $10M$ $HNO_3$-$0.05M$ HF.[29] If the aluminum content is in the range of 1 to 10 wt %, the alloy is dissolved in $10M$ $HNO_3$-$0.1M$ HF. If the aluminum content is >10 wt %, the alloy is either dissolved in $10M$ $HNO_3$, with $0.05M$ mercuric nitrate as a catalyst, or the plutonium-aluminum residues are placed in the basket of the slag and crucible dissolvers where they will be slowly dissolved during normal crucible processing cycles (see Section 5.4 for greater detail). Since a fluoride slag is being processed, the fluoride concentration is more than ample to accomplish dissolution.

The dissolution of aluminum by $HNO_3$ with mercury present proceeds rapidly and may become violent if the quantity of mercury is too great. A series of experiments showed, for the equipment concerned, that a satisfactory rate of dissolution could be obtained with $10M$ $HNO_3$-$0.05M$ $Hg^{2+}$.

The insoluble residues are separated by filtration and stored until a bulk weight of 400 g has been accumulated; they are then leached with $10M$ $HNO_3$-$0.05M$ HF. After this leach, the residues are transferred to the bulk fusion system for recovery of the remaining plutonium. The filtrates are transferred to a purification system, such as solvent extraction, oxalate precipitation, or ion exchange, for final processing.

## 3.6 Dissolution of Plutonium-Uranium

The method of dissolution depends upon the amount of uranium present; that is, if the uranium content is less than 1 wt %, the metal is processed as if it were unalloyed plutonium. If the uranium content is greater than 1 wt %, the dissolution may proceed quite rapidly in $4M$ $HNO_3$, especially if the feed metal is in the form of a powder or fine turnings. The higher the uranium content of the feed, the more the alloy to be dissolved acts like pure uranium metal. Thus with an alloy containing 85 wt % uranium, rapid dissolution of the uranium will take place in $4M$ $HNO_3$, about 5 to 20% of the plutonium will be dissolved, and the rest of the plutonium will be converted to $PuO_2$.

To dissolve the $PuO_2$, the $HNO_3$ concentration must be increased and HF must be added. Because large volumes are not desired, it is not practical to add the required amount of $15.6M$ $HNO_3$ and, hence, the $HNO_3$ concentration is increased by distilling some of the water. The resulting concentrate, ~700 ml, will be ~$8M$ $HNO_3$. $HNO_3$, HF, and $H_2O$ are then added to bring the solution to a final volume of 1500 ml, to $10M$ $HNO_3$, and to $0.05M$ HF. The high acid slurry is refluxed for 2 hr to dissolve all the $PuO_2$.

Plutonium-uranium residues may also be prepared for dissolution by the burn method used for plutonium-cerium alloy described in Section 3.4. The resulting mixture of oxides can be dissolved in $HNO_3$-HF mixture without danger of ignition.

When the dissolution is complete, the solution is cooled and filtered through a medium sintered glass frit. After sampling the solution for plutonium analyses, the solution is transferred to a nitrate anion-exchange system for the separation of plutonium and uranium discussed in Section 8.6. The filter residues are recycled.

## 3.7 Dissolution of Plutonium Alloyed with Zirconium, Hafnium, Iron, and Thorium

The method for dissolution of these alloys is the same as for unalloyed plutonium except that if the cation impurity is greater than 3 wt %, the $F^-$ concentration must be increased to compensate for the effective loss in $F^-$ caused by the formation of fluoride complexes or precipitates with the cation impurities. For example, iron forms soluble fluoride complexes, analogous to aluminum. Thorium, however, will precipitate as $ThF_4$, once the solubility product is exceeded, rather than form a soluble anionic complex. Thus, on an equal molar basis, the formation of the soluble ferro-fluoride complex would consume more $F^-$ than the formation of $ThF_4$.

The resulting solutions are filtered, using a medium sintered glass frit, and sent to the applicable purification system. The solutions containing only iron are transferred to an oxalate precipitation system, those with thorium to the chloride anion-exchange or the $ThF_4$ precipitation system, and the other solutions to a nitrate anion-exchange system.

## 3.8 Dissolution of Plutonium-Copper

The dissolution of plutonium-copper alloys can be readily accomplished using the method for unalloyed plutonium. These alloys are listed separately here only because they have been known to ignite under solution in the same manner as plutonium skulls. Therefore, the weight of alloy per batch is reduced to 200 g to reduce the severity of a possible fire.

## 3.9 Dissolution of Plutonium-Osmium

The dissolution of plutonium-osmium alloys proceeds smoothly using the $HNO_3$-HF procedure for unalloyed plutonium. The reflux period, however, must be lengthened to 6 hr to permit the osmium to form the volatile oxide which can then be removed by the flow of helium used to sparge the solution. Analyses of the distillate and the product from this process show an osmium content of $<10$ ppm, based on plutonium. Thus both solutions can be treated as though they were from the dissolution of unalloyed plutonium.

## 3.10 Dissolution of Miscellaneous Alloys

Plutonium alloyed with manganese, titanium, indium, chromium, platinum, the lanthanides, gallium, and similar cations[30, 31, 32] have all been found to dissolve in $HNO_3$-HF. Although various separation methods can be used, satisfactory products ($<300$ ppm metallic impurities, based on plutonium) can be obtained using the nitrate anion-exchange process.[33, 34, 35] This method and other processes used to purify plutonium are discussed in Sections 8.4, 8.6, and 8.9.

## 3.11 Conversion of Plutonium Metal to Oxide

The pyrophoric nature of plutonium metal and its alloys makes all liquid dissolutions susceptible to uncontrolled self-ignited fires. Because the oxide is very stable, procedures were developed for converting the metal and its alloys to the oxide which then could be handled safely in any atmosphere. The conversion to oxide can be accomplished safely by ignition in any furnace in which the oxygen and moisture content of the atmosphere can be controlled.

The ignition is usually performed in MgO or $Al_2O_3$ crucibles but certain alloys may, under special conditions, be ignited in Type 316 stainless steel beakers. For example, coarse turnings or massive pieces of the ternary alloy, plutonium-cobalt-cerium, may be safely ignited in a stainless steel beaker on a hot plate in the normal glove box atmosphere, but the powder form of the ternary alloy is extremely pyrophoric. It must be loaded under an inert atmosphere and the ignition must be controlled by regulating the flow of argon or oxygen over the heated alloy.

The off-gases from the ignition of all pyrophoric alloys and compounds, except plutonium deuteride, are allowed to escape to the process air exhaust system. The off-gases from the ignition of plutonium deuteride are passed through a cold trap.[36, 37]

At Los Alamos, only the plutonium-cobalt-cerium alloys and certain skulls are routinely converted to the oxide as the first step in the recovery of the plutonium involved. If the ignition temperature does not exceed 600°C, the resulting $PuO_2$ can be readily dissolved by refluxing with $10M$ $HNO_3$-$0.05M$ HF. The procedure for the dissolution of $PuO_2$ is given in Section 4.4.

# Chapter 4. DISSOLVING PLUTONIUM COMPOUNDS

## 4.1 Dissolution Policy

A large fraction of the plutonium sent to recovery operations is in the form of impure compounds. The first step in recovery is to dissolve the compounds so that the various plutonium separation systems in the plant can be used. Once a solution has been obtained it is sent to a separation system that is compatible with the type of acid used to dissolve the compound, the metallic impurities in the compound, and the anionic radical formed or put into the solution during the dissolving procedure.

All plutonium-bearing compounds can be dissolved in at least two different media. Although some of the dissolutions proceed smoothly in a certain medium, the introduced anion is often incompatible with the equipment to be used later in one of the processes, or the anion will make the separation of the cations more difficult. Therefore, a compromise has to be made. The policy at Los Alamos is to select the medium for dissolution that will give the easiest solution to process, even though longer dissolving times may be required.

## 4.2 Dissolution of Plutonium Hydride

In 1944, Pittman *et al.* reported[5] that HCl was the best medium for dissolving plutonium hydride. Further work with this compound, some as late as 1961,[36] confirmed this finding, but the handling and dissolution must be done under an inert atmosphere of at least 70% He, <6% $O_2$, and <24% $N_2$ to prevent spontaneous ignition. With this system, the flow sheet for which is shown in Fig. 19, nearly complete dissolution is obtained, but the resulting solution is not compatible with stainless steel without prior chemical treatment. This process was used for several months and the HCl solutions were processed in the cation-exchange system discussed in Section 8.5. Later, after experiments had confirmed that large amounts of HCl could be tolerated in *7M* $HNO_3$ systems (see Section 8.2), these solutions were processed in a nitrate anion-exchange system employing many stainless steel components after dilution to ~ 1*M* HCl with *7M* $HNO_3$.

Even though the HCl solutions could be processed easily in the *7M* $HNO_3$ anion-exchange system, the dissolution of plutonium hydride in HCl in an inert atmosphere was not considered to be an ideal process. Experimental work by Reavis[36] resulted in the development of a procedure to convert the hydride to metal. By converting the hydride to metal and dissolving the metal in an $HNO_3$-HF mixture, both the corrosion of process equipment and the probability of spontaneous ignition of the material are reduced. This method has been used since 1961 for processing plutonium hydride, using the procedure for the dissolution of the resulting metal discussed in Section 3.2.

## 4.3 Dissolution of Plutonium Oxalate

The solubility of plutonium oxalate increases very rapidly with increasing acidity; however, the plutonium will not stay in solution when water is added unless the oxalate ion is destroyed by oxidation.

Experimental work prior to 1944 indicated that an $HNO_3$-$H_2SO_4$ mixture was the best medium for the dissolution of plutonium oxalate.[5] This process involved fuming with $HNO_3$ and $H_2SO_4$ until the oxalate was completely destroyed. The plutonium sulfate that was formed could then be dissolved in water and HCl.[5]

After 1944 the Recovery Section turned more and more to solvent extraction in which the presence of large amounts of sulfate interferred with the extraction of plutonium and a new method for the dissolution of plutonium oxide was desired. Other methods of treatment then in use to dissolve plutonium oxalate used nitric or hydrochloric acid along with a strong oxidizing agent such as $NaBrO_3$ or $KMnO_4$. Such methods could be used only when the extraneous cation introduced was compatible with succeeding processes. A method using $NaBrO_3$, for example, would evolve large quantities of corrosive bromine that would preclude the use of stainless steel equipment.

The need for a process for dissolving plutonium oxalate that would require or yield only cations or radicals common to succeeding processes led to the investigation of dry conversion methods. In 1947 and 1948, experimental work showed[38] that dehydration and direct hydrofluorination of plutonium oxalate would yield a plutonium fluoride that could be dissolved in $HNO_3$-$Al(NO_3)_3$ or even be bomb-reduced to plutonium metal.

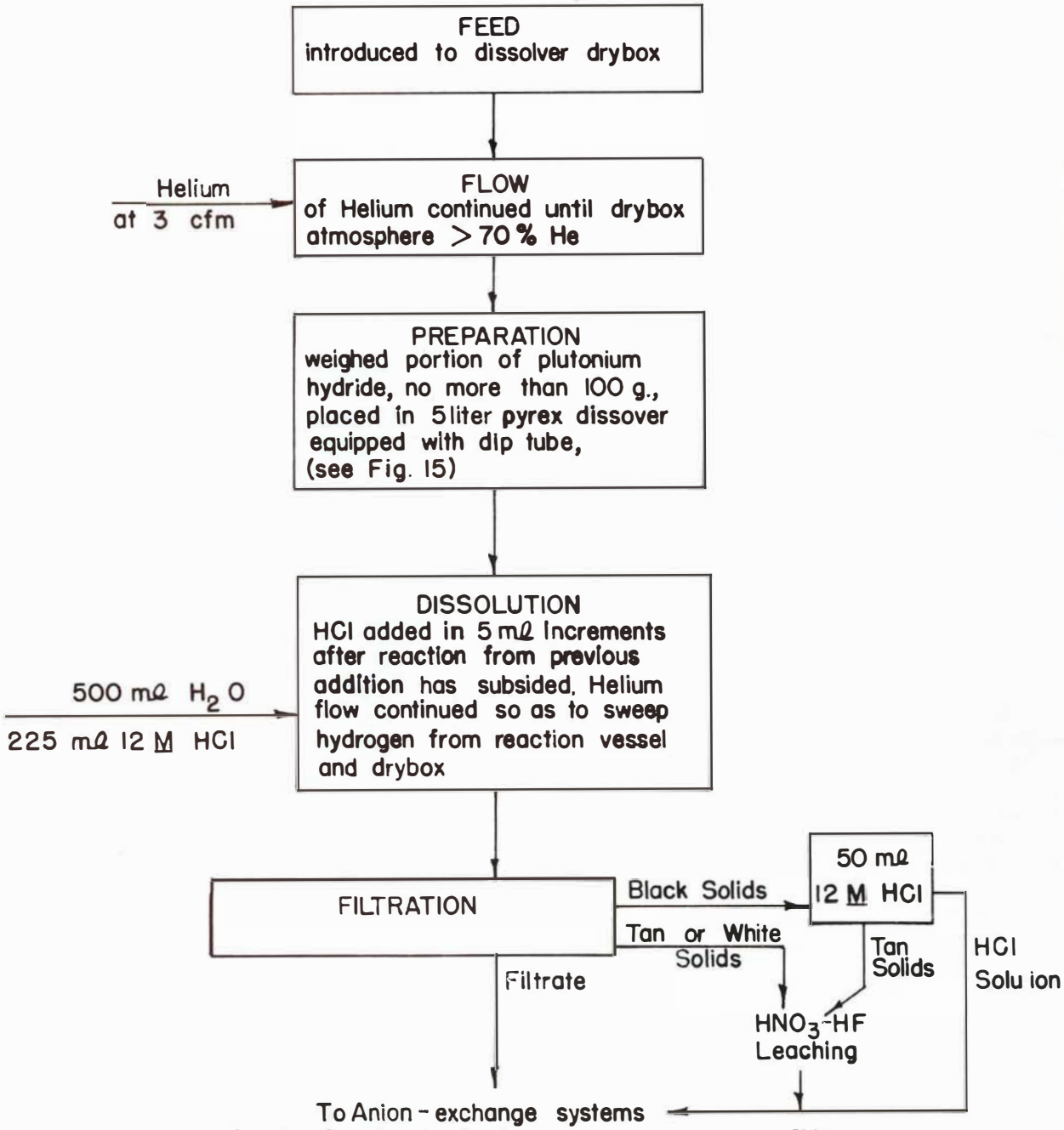


Fig. 19. Flow sheet for dissolution of plutonium hydride in HCl.

By 1954, experimental work had shown[39] that although there were many methods that would dissolve plutonium oxalate or convert plutonium to another compound that was more soluble in a common medium, each of these methods had a serious drawback. Boiling in concentrated $HNO_3$, fuming with $H_2SO_4$, NaOH metathesis, or $Al(NO_3)_3$-$H_2O_2$ metathesis required far too much time for dissolution and filtration. Boiling in $HNO_3$-$KMnO_4$ or $HNO_3$-$Na_2CrO_4$ introduced undesirable impurities that would later have to be removed.

Nance[40] found that the simplest method was to ignite the oxalate to the oxide at a low temperature (~500°C) and then dissolve the oxide in 10*M* $HNO_3$-0.05*M* HF. This method was considered to be suitable for a plant processing system; a minimum of equipment and glove box space was required, the oxalate was completely re-

moved, no cations or anions were introduced that would make the purification of the plutonium more difficult, and the resulting solution was compatible with stainless steel equipment. This method is now used on all plutonium oxalates.

The ignition is done in stainless steel beakers on a hot plate or in any furnace capable of reaching ~500°C. The resulting oxide is dissolved, using the procedure shown in Fig. 20. in the standard metal dissolving equipment shown in Fig. 14. The iron pick-up from ignition in stainless beakers is less than 0.1 g per batch and is easily removed in the precipitation of the plutonium peroxide in the metal preparation facilities.

## 4.4 Dissolution of Plutonium Oxide

The ease with which plutonium oxide can be dissolved depends upon the temperature at which the oxide was formed or to which it was subsequently heated. Oxides that have been heated to less than 600°C are generally considered to be relatively easy to dissolve; oxides heated to temperatures between 600 and 1000°C require somewhat more stringent procedures; oxides that have been fired at temperatures greater than 1000°C require extreme measures.

In 1944. Pittman *et al.* reported[5] that fusion with $K_2S_2O_7$ was the best method for dissolving $PuO_2$ using a weight ratio of 8 parts $K_2S_2O_7$ to 1 part $PuO_2$. If complete dissolution was not obtained. the residues were treated with a $Na_2O_2$-carbon spontaneous fusion. $HNO_3$-HF had been used but the fusion methods were preferred.

Bjorklund[41] made an extensive study of the dissolution of plutonium oxide by HCl-KI mixtures and showed that the oxide could be dissolved by this method but that this system had the disadvantage of causing severe corrosion of stainless steel equipment. thus requiring special purification systems.

Other dissolution mixtures were tried,[42] such as 85% $H_3PO_4$ and $HNO_3$-HI,[42] but none were as generally satisfactory as the $HNO_3$-HF method. Experimental evidence in 1951[43] showed that complete dissolution was not obtained until the HF concentration reached 0.05*M*. Continued work showed that the most efficient dissolution was obtained with 10*M* $HNO_3$-0.05*M* HF. The preferred procedure is shown in Fig. 20.

Because the origin of oxide residues is so varied, and in many instances the ignition temperature is unknown, the processing of oxides at Los Alamos has evolved into the practice of trying

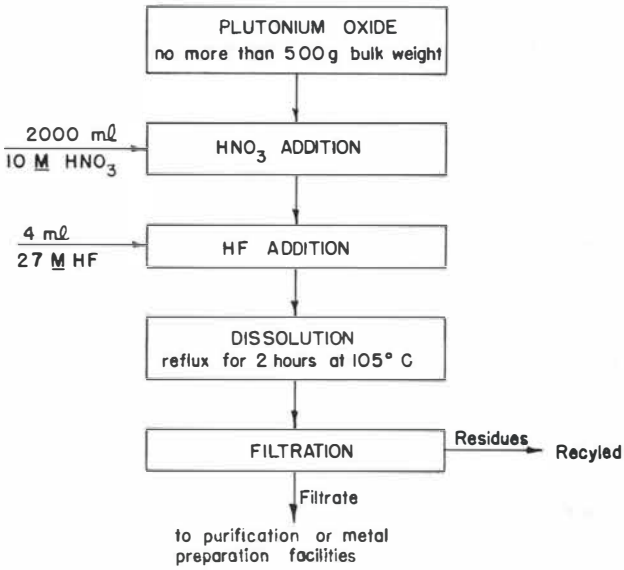


Fig. 20. Dissolution of plutonium oxide residues.

$HNO_3$-HF first. If a major portion of the oxide dissolves in the first $HNO_3$-HF leach. a second leach is used on the filter residue. If very little oxide dissolved in the first leach, a more drastic procedure than a second $HNO_3$-HF leach is used.

In 1951. Johnson and Pritchard[44] developed a fusion procedure that was much more quantitative than the process devised by Pittman *et al.*[5] in 1944. The experimental work by Johnson and Pritchard showed that the fusion efficiency could be greatly enhanced by the addition of a small amount of NaF. Therefore. if the oxide is sparingly soluble in $HNO_3$-HF, the residue is dried and mixed with a flux made of 10 parts $K_2S_2O_7$ to 1 part NaF by weight, using 7 parts flux to 1 part oxide. This mixture is heated in a platinum boat or a Hastelloy "C" cylinder at 550°C for approximately 2 hr. The melt is cooled. removed from the fusion vessel. and transferred to a dissolution vessel. To this vessel is added 10*M* $HNO_3$-0.3*M* $Al(NO_3)_3$ and the mixture is heated at the boiling point for 1 hr. The solution is then cooled and filtered. Many different filters have been used (such as graphite. stainless steel, porous plastics. and sintered glass. all of medium porosity) but the preferred method is to place diatomaceous earth filter aid on a sintered glass filter to increase the filtration rate. The filter residues are washed with several portions of water or dilute $HNO_3$ and air dried by pulling air through the cake for about 1 hr. If measurement of the $\beta$-$\gamma$ emission indicates that the solids contain little or no plutonium. they are dried at 300°C in a muffle furnace and sampled for plutonium analyses. If

an appreciable plutonium content is indicated, the solids must be recycled. If desired, the diatomaceous earth can be removed from the dried residue by converting the $SiO_2$ to the volatile $SiF_4$ as discussed in Section 6.4 so that only a minimum amount of residue need be fused with $K_2S_2O_7$-NaF.

The solutions resulting from the dissolution of oxides are transferred to an applicable separation system. The purification system is selected on the basis of what types of cations are present.

Included in the category of oxides are $PuO_2$-molybdenum pellets that have been fired at temperatures in excess of 1600°C. These have proved to be difficult to dissolve. Development work has shown that the best results are obtained by using alternating leaches of 8*M* $HNO_3$-0.25*M* $Fe(NO_3)_3$ and 10*M* $HNO_3$-0.05*M* HF. The dissolution rate is slow and a large number of leaches are required to eventually dissolve the pellets. At present the quantity of such residues is so small that further development work is not justified. $PuO_2$-stainless steel pellets dissolve best in $HNO_3$-HF.

## 4.5 Dissolution of Plutonium Fluoride

Small amounts of $PuF_3$ or $PuF_4$ can be dissolved by boiling in concentrated $HNO_3$; the rate of dissolution depends upon the rate of escape of $F^-$ from solution. This method is very slow and is used only when aluminum cannot be tolerated in the resulting solutions.

The preferred method is to add 10*M* $HNO_3$ to the fluoride and then add a mole of aluminum for each mole of fluoride believed to be present and the mixture refluxed for 1 to 2 hr. The solution is then cooled and filtered. The residue is recycled, either through another $HNO_3$-$Al(NO_3)_3$ leach or through the bulk fusion process described in Section 6.5. The filtrate is transferred to an applicable purification system.

## 4.6 Dissolution of Plutonium Peroxide

In 1944 Pittman *et al.* reported[5] that $HNO_3$ was the best reagent for the dissolution of plutonium peroxide. This dissolution method is so complete, even without adding external heat, that it is still used to dissolve plutonium peroxide. The reaction between plutonium peroxide and $HNO_3$ can be quite violent; one of the most dangerous features is the variable lapse of time required for the dissolution to start. It has been the practice at Los Alamos to place 500 ml of 15.6*M* $HNO_3$ in a 2-liter beaker and then add the solid plutonium peroxide in small increments. The first addition of peroxide results in a bluish-green solution indicative of the presence of both trivalent plutonium and a high $HNO_3$ concentration, and the rate of dissolution is rather slow. The reaction is exothermic and in time the peroxide will dissolve nearly as rapidly as it is added. With a sufficiently high temperature and the proper nitric acid concentration, the trivalent plutonium is oxidized to the tetravalent state. The rate of addition of the peroxide to the $HNO_3$ must be slow until the valence transition is indicated by the sudden release of $NO_2$ fumes and a change in color from the bluish-green of a trivalent plutonium-highly concentrated $HNO_3$ solution to the greenish-brown of the tetravalent plutonium-$HNO_3$ solution. The plutonium peroxide can then be added rather rapidly. The solution will be green if the acidity is greater than 5*M* and brown if less than 5*M*.

Delay in the start of dissolution can be overcome by heating the 15.6*M* $HNO_3$ before adding the first increment of plutonium peroxide. Since the temperature of the solution need be only 50°C, a hot plate can be used to warm the $HNO_3$ and the plutonium peroxide can then be added rather rapidly. With warm 15.6*M* $HNO_3$, the first addition of plutonium peroxide results in the evolution of $NO_2$ gas as a sign that the trivalent plutonium formed is being oxidized to the tetravalent state. This situation is applicable only if the peroxide has been freshly precipitated. If the peroxide has been stored for several days since precipitation, or if the peroxide has been heated for more than 1 hr in a furnace at 300°C, an appreciable quantity of residue, mainly a low-temperature oxide, is left after $HNO_3$ treatment. The insoluble residue is returned to a $HNO_3$-HF dissolution process. The filtrate is sent to an applicable purification system.

## 4.7 Dissolution of Plutonium Carbide

Pittman *et al.* reported in 1944[5] that fusion with $K_2S_2O_7$ was the best method for the dissolution of plutonium carbide. Additional work showed that plutonium carbide will dissolve by refluxing in 10*M* $HNO_3$-0.05*M* HF, although the rate of dissolution is rather slow.[45] Another method is to dissolve the carbide in HCl. The dissolution proceeds at an acceptable rate but is much slower than the dissolution of plutonium peroxide in $HNO_3$. With 1 to 6*M* HCl, the reaction proceeds without the application of heat and thus the dissolution equipment usually consists of a plastic or glass beaker and a mechanical stirrer. The resulting solutions are transferred to an applicable separation system.

The preferred method for the dissolution of mixed carbides of plutonium and uranium starts with the conversion of the material to oxide by heating at 400°C for 2 hr in air. The low-temperature oxide material is then leached in an $HNO_3$ medium. Experiments and plant-scale dissolutions have shown that > 90% of the plutonium can be dissolved by refluxing for 2 hr in 10*M* $HNO_3$ only. Reflux times as long as 24 hr do not greatly increase the amount of plutonium dissolved. A satisfactory dissolution rate for the remainder of the plutonium requires the addition of 3 ml of 28*M* HF after the reflux in $HNO_3$ has been completed, followed by another reflux period of 2 hr. The dissolution of the plutonium has been quantitative in every instance in which this method has been used for the mixed carbides.

## 4.8 Dissolution of Plutonium Silicide

Plutonium silicide is dissolved in $HNO_3$ although it may also be dissolved in HCl. The $HNO_3$ method is preferred because as the silicide dissolves in HCl a gas is given off which bursts into flame when it comes into contact with air. It is believed that this gas is a silane.[46] The $HNO_3$ dissolution is somewhat slower, but is preferred to avoid the release of the flammable gas.

Dissolution of the silicide in 10*M* $HNO_3$-0.05*M* HF requires reflux periods of 4 hr and filtration and recycling of insolubles. The filtrate is sent to the proper anion-exchange system for purification, the choice of system depending upon plutonium concentration and type of cation impurities present.

## 4.9 Dissolution of Plutonium Chloride

$PuCl_3$ is very soluble in water if the formation of PuOCl can be prevented. If the material contains PuOCl, an $HNO_3$-HF leach will be required to dissolve the water-insoluble portion.

At Los Alamos, $PuCl_3$ is dissolved in dilute acid, either HCl or $HNO_3$, so that the hydrogen-ion concentration can be kept high enough to prevent formation of a plutonium polymer and the formation of PuOCl. The corrosion of the stainless steel in subsequent processing equipment by HCl can be prevented by adding $HNO_3$ to a concentration of > 3*M*, as was shown when stainless steel coupons were tested with $HNO_3$-HCl mixtures. This work is discussed in Section 8.2.

## 4.10 Dissolution of Electrorefining Residues

The routine dissolution of unalloyed plutonium was discontinued at this laboratory when a successful electrorefining system and process was developed by Mullins, Leary, Bjorklund, Morgan, and Maraman.[47-51] This process not only requires fewer man-hours per gram of purified plutonium, but results in a purer product than can be obtained by the bomb reduction method. The average yield of this process is ~ 95%. The metal product, containing <100 ppm total impurities (cationic and gaseous), is sent directly to casting operations, and the anode residue is directly recycled until the impurity level in the anode causes such a high back emf that the anode must be purified in aqueous recovery operations. The remaining plutonium is lost to the chloride melt, which must be processed in aqueous recovery operations.

Because of their chloride content, these residues require special treatment to prevent corrosion of the stainless steel equipment. The chloride melt from electrorefining can be dissolved in 0.5*M* HCl, but almost invariably a black residue is left on the filter. This residue apparently contains both $PuO_2$ and $PuF_4$, which can be dissolved in $HNO_3$-HF. However, since 1*M* $Cl^-$ can be tolerated in stainless steel equipment, if the $HNO_3$ content is >3*M*, the melt can be dissolved directly in $HNO_3$-HF instead of using 0.5*M* HCl as a final step. The dissolution is essentially complete in one step and the residue generally contains far less than 0.5% of the original amount of plutonium. The filtrate is transferred to one of the anion-exchange systems where the solution is diluted with 7*M* $HNO_3$ until the plutonium concentration is less than 25 g/liter and the chloride concentration is less than 1*M*. This solution is then ready to be fed to a nitrate anion-exchange column. The equipment used for this dissolution is the standard 5-liter flask and related equipment shown in Fig. 15.

The preferred method, however, is to leach the chloride melt with 2*M* NaOH. This method dissolves the chloride salts of sodium, potassium, and lithium, and precipitates the plutonium as the hydroxide. The supernatant, after a decant filtration, can be discarded if its plutonium concentration is $<1 \times 10^{-3}$ g/liter, thus disposing of the corrosive chloride ion.

The slurry, consisting of the insoluble hydroxides of elements such as magnesium and plutonium and the MgO pieces from the anode cup, are transferred to a wash apparatus made of a coarse mesh screen placed in a stainless steel beaker (Fig. 21). With this device, the hydroxides can be readily washed from the pieces of MgO crucible so that the MgO can be dissolved in the crucible dissolvers (discussed in Chapter 5), while allowing the major portion of the plutonium to pass through the screen with the fines. The plutonium hydroxide at times is held very tightly to the surface of the MgO, and the water jet wash may not be sufficient to remove the desired amount of plutonium. A wash with 3*M* $HNO_3$, which starts to dissolve the surface of the MgO, may then be necessary to reduce the plutonium concentration to the desired level.

The fines, consisting mainly of hydroxides of plutonium and other cations, are transferred to a dissolution apparatus similar to that shown in Fig. 15. Approximately 500 ml of water is used to rinse the hydroxides and other residue out of the stainless steel receiver into the dissolution vessel after which 1 liter of 16*M* $HNO_3$ is added to start the dissolution of $PuO_2$. The dissolution is then completed following the procedure given in Fig. 20.

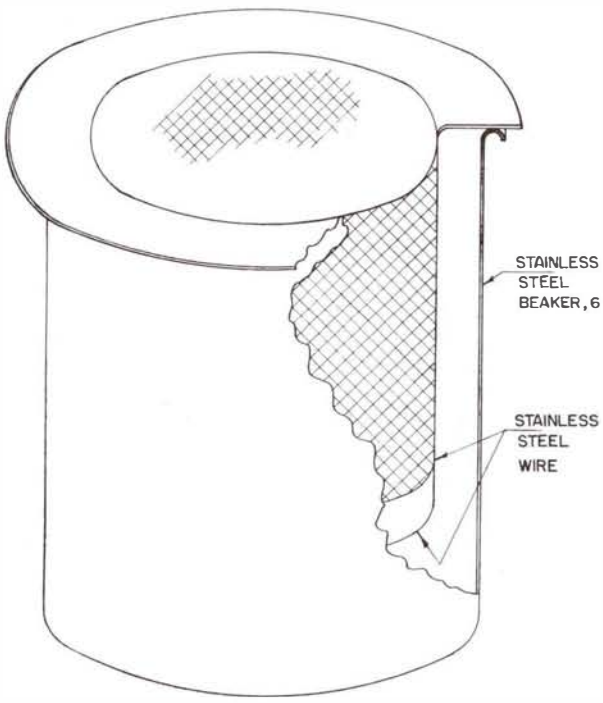


Fig. 21. Screen for washing crucible.

## 4.11 Dissolution of Plutonium Sulfate

Since plutonium sulfate is soluble in water, any solids containing this compound are leached first with water or very dilute $HNO_3$ and the residue is then leached with $HNO_3$-HF as if the solids were $PuO_2$. The water leach solution may then be acidified with $HNO_3$ so that it can be used as a feed solution for a nitrate anion-exchange column. Extremely high sulfate or a combination of high sulfate and high fluoride concentrations interfere with the sorption of the plutonium in an anion-exchange system, as discussed in Section 8.6.

## 4.12 Dissolution of Plutonium Hydroxide

If the plutonium hydroxide has been freshly precipitated, the dissolution of this solid can usually be accomplished by the addition of $HNO_3$ to about 2 or 3*M* $H^+$. If the hydroxide has been stored or exposed to air for more than a few hours, complete dissolution cannot be obtained by addition of $HNO_3$. To dissolve this material, which is mainly a hydrated oxide of plutonium, the $HNO_3$-HF procedure (Section 4.4) is used as if the compound were $PuO_2$.

## 4.13 Dissolution of Cupferrates

Since the cupferrates of some metallic ions are explosive when dried and since the cupferrate residues received from the analytical section are of unknown composition, the ignition to oxide method was rejected. As an alternative, the cupferrate residues received from the analytical section can be dissolved in 15.6*M* $HNO_3$. This solution can then be safely added to the feed solution being put on one of the nitrate anion-exchange columns. Since the feed to these columns is 7*M* $HNO_3$, the acidity is sufficiently high to keep the cupferrates from reprecipitating. The presence of a small amount of cupferrate in the feed solution does not impair the sorption of plutonium onto the resin in a nitrate anion-exchange column.

# Chapter 5. DISSOLVING REDUCTION AND CASTING RESIDUES

## 5.1 Early Development Work

During the development of the bomb reduction method for the preparation of plutonium metal, Baker *et al.*,[52-56] working with uranium as a stand-in for plutonium, found that an appreciable quantity (>1%) of uranium was lost to the reduction slag and the MgO-2% $SiO_2$ liner in the reduction bomb. Later work[57] showed that plutonium behaved in a similar manner.

Because of the scarcity of plutonium in 1944 and 1945, an immediate effort was made to recover and purify the metal lost to reduction residues. When this work was started it was assumed that the reduction residues should be divided into three fractions for processing: the MgO packing sand, the reduction slag, and the MgO crucible serving as the liner for the reduction bomb. It was thought that the MgO packing sand would contain so little plutonium that it or its leach solutions could be discarded. Later work proved this not to be the case, mainly because of plutonium contamination of the packing sand during unloading rather than during reduction. The reduction slag would, it was believed, contain nearly all of the plutonium that did not appear in the metal slug and would have to be completely dissolved. The choice of which acid or solution to use for the dissolution of this material after the iodine had been removed would be based on experimental work on the MgO liners. It was thought that the MgO liner could, by sorting, be isolated relatively free of slag and that what contamination followed could be removed by a surface leach. Therefore, attempts were made to remove plutonium and uranium by a surface leach of the crucible with HCl or $HNO_3$, leaving the refractory crucible essentially undissolved. It was found, however, that leaching would not extract all the uranium and plutonium and that the entire crucible would have to be dissolved to obtain complete recovery.[5, 6, 7, 58]

In the preparation of plutonium metal using the bomb reduction method developed by Baker,[57] iodine is used as a booster to increase reduction yields. Because of the corrosiveness of iodine on stainless steel components, the first efforts were directed toward leaching the crucible with HCl rather than $HNO_3$, thus avoiding the oxidation of the iodide to iodine,[5] or toward igniting the crucible in a muffle furnace, thus subliming the free iodine so that the crucible could be dissolved in $HNO_3$.[58] Attempts to use NaOH for removing iodine from the reduction slag and liner were abandoned because of the large volumes of solutions and solids involved. Most of the iodine was removed by boiling the residues for 1 hr in 5*M* NaOH, but this step was considered to be too lengthy.[6] It was found that the iodine could be removed by treating the chunks of liner with solid $Na_2S_2O_3$ and enough water to dissolve the added salt, but this method resulted in high plutonium losses.[6]

By 1945, the procedure for dissolving uranium reduction slag employed an 8-hr chlorination at 400°C to remove the iodine.[58] Once the iodine had been removed, the dissolution of the slag was accomplished in $HNO_3$ or in a mixture of $HNO_3$-$Al(NO_3)_3$.[58] The crucible that had been separated earlier was dissolved in $HNO_3$-$Al(NO_3)_3$.

Fusions with pyrosulfate and with sodium peroxide-carbon were tried, but these methods were rejected because the pyrosulfate fusion resulted in only partial recovery and the sodium peroxide-carbon reaction was so violent that the material was often sprayed from the reaction vessel.

## 5.2 Dissolution of Reduction Residues

The development work that led to selection of the present method for recovery of plutonium from reduction residues was started by Maraman in 1946.[59] This work showed that equipment could be designed for a method in which the three fractions of the reduction residues could be processed without sorting. Corrosion by fluoride was avoided by using $HNO_3$-$Al(NO_3)_3$ as the first dissolving medium and corrosion by iodine was prevented by sublimation of the iodine from the heated high nitrate solution and scrubbing the off-gases with 2*M* KOH.

Continuation of the experimental program by Maraman *et al.*,[60] Lowe and Magness,[61] Mullins and Winchester,[62] and Mullins *et al.*,[63] resulted in the development of a dissolving procedure using an $HNO_3$-$Al(NO_3)_3$ solution as the dissolving media.

The steps in the procedure used in 1949 were:

1. The slag, crucible, and packing sand were placed in a 12-liter reaction vessel.

2. The $Al(NO_3)_3$ solution (~0.8*M*) was

then introduced. (The total amount of salt added was six times the slag weight.) The surface of the liquid in the vessel was swept with air to rapidly remove the hydrogen gas liberated during the reaction of calcium and water.

3. After all the calcium had reacted with the water and the liberation of hydrogen gas had ceased, 15.6*M* $HNO_3$ was added slowly. Hot water was passed through the condenser during the $HNO_3$ addition to prevent the liberated iodine from condensing on the walls of the condenser. After all the iodine had been removed, cold water was passed through the condenser and the reaction mixture refluxed for 6 hr. Sufficient $HNO_3$ was added to render the slag and crucible solution ~5*M* in free acid.

4. Upon completion of the reflux period, the solution was filtered through a medium porosity sintered glass funnel or through glass cloth. The solids were washed with 6*M* $HNO_3$ and the washing solutions were combined with the filtrate. The solution was then diluted with 6*M* $HNO_3$ so as to give a solution that had a density of ~1.38 g/ml at 25°C. The solids remaining on the filter were saved for leaching with acid. The solutions were transferred to an applicable purification system such as plutonium extraction with tri-n-butyl phosphate or a cation-exchange system.

Tests of this procedure by several pilot-plant runs during the next few months were so successful that the procedure was adopted for large-scale processing of slag and crucible. In 1950, the design of a large-scale dissolving system, having as its dissolver a 50-gal. Pfaudler glass-lined kettle, was completed. This equipment was installed and put into operation in early 1951.[64] The 50-gal. kettle had a special lid with three flanged openings arranged so that one opening could be bolted to the floor of a glove box, the second could be bolted to a water-cooled condenser (connected to a down pipe which ended in a caustic scrubber used to trap the iodine in the off-gasses), and the third could receive pipes for introducing solutions, for air sparging, and for withdrawal of the final product. A sketch of this equipment is shown in Fig. 22. The gasket material at all connections was solid Teflon or Teflon-wrapped asbestos envelopes.

The slag and crucible material to be dissolved was put in the kettle through the opening in the glove box floor. The opening was then sealed by a stainless steel cover fitted with a Teflon gasket. The $Al(NO_3)_3$ and $HNO_3$ were added through the fill tube, following the steps of the procedure shown in Fig. 23. Often the exothermic dissolution of the MgO sand would become so

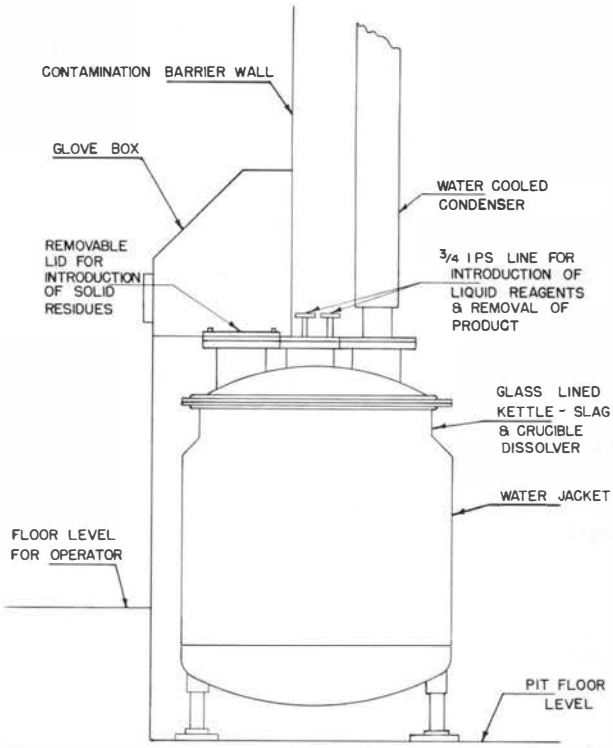


Fig. 22. Installation of slag and crucible dissolver in 1951.

violent and the solution so viscous that the resultant foam would be forced up the reflux condenser and over into the caustic solution in the off-gas scrubbers. The plutonium carried over to scrubbers by the foam necessitated recycling the caustic scrub solution, a task that was extremely distasteful since all of the iodine that had been removed now had to be removed again. Therefore, special efforts were made to add only enough heat to start the reaction, with operators staying alert to the possible requirement of introducing chilled circulating water to the dissolver annulus to slow the reaction and thus stop a "foam-over."

After the reflux step, the solution was withdrawn to an overhead tank from which the slurry could be gravity-fed to the filters in the next glove box. The filters used were either a 7-in. graphite cylinder, installed as shown in Fig. 24, or a woven glass bag, installed as shown in Fig. 25.

The filtrate was transferred to the stabilization step of the tri-n-butyl phosphate extraction system for removal of plutonium and americium. The valence stabilization procedure is discussed in Section 8.3 and the solvent extraction in Section 8.9.

Several other methods were investigated for

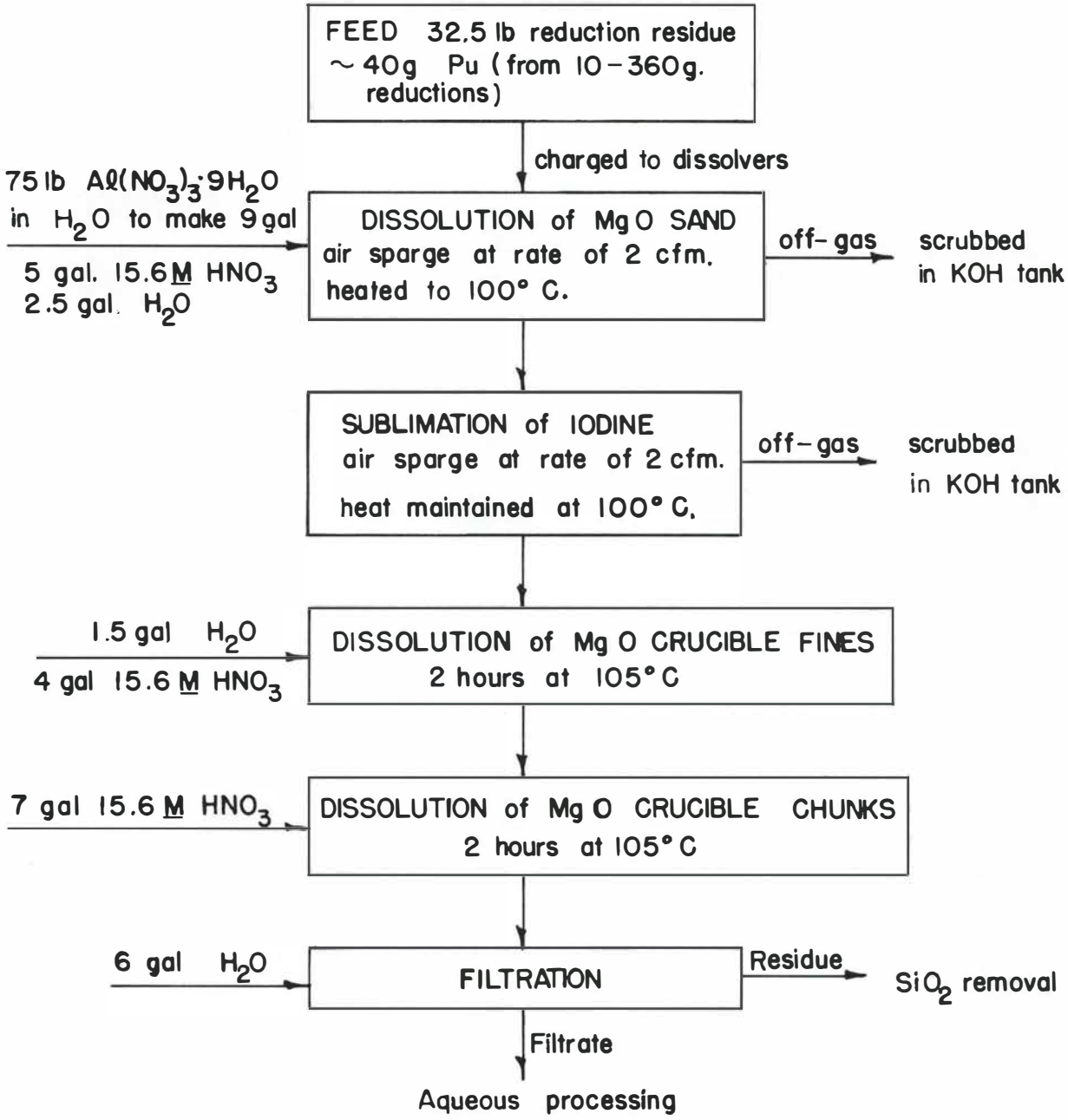


Fig. 23. Dissolution procedure for reduction residues in 1951.

the recovery of plutonium from these solutions, such as oxalate or hydroxide carrier-precipitations, cation exchange, low-acid anion exchange, and solvent extraction with organics such as thenoyltrifluoro acetone (TTA), tri-n-butyl phosphate (TBP), and hexone, with the final choice in 1950 being the selection of a TBP-in-kerosene extraction in packed columns.

## 5.3 Dissolver Residues

The residue from the filtration discussed in Section 5.2 was dried by pulling air through the solids for several hours. The drying was completed by heating the solids from the graphite filter (or the solids and the glass filter bag) in a pot furnace at 90°C for 1 to 2 hr or until no further condensate was obtained in the off-gas condenser. Because $HNO_3$ would corrode the Hastelloy "C" furnace tubes used in the hydrofluorination system, the nitrates were decomposed by heating them at 200°C for 4 to 6 hr or until no more $NO_2$ fumes were evolved. The solids thus prepared were ready for processing in the $SiO_2$ removal system described in Section 6.4.

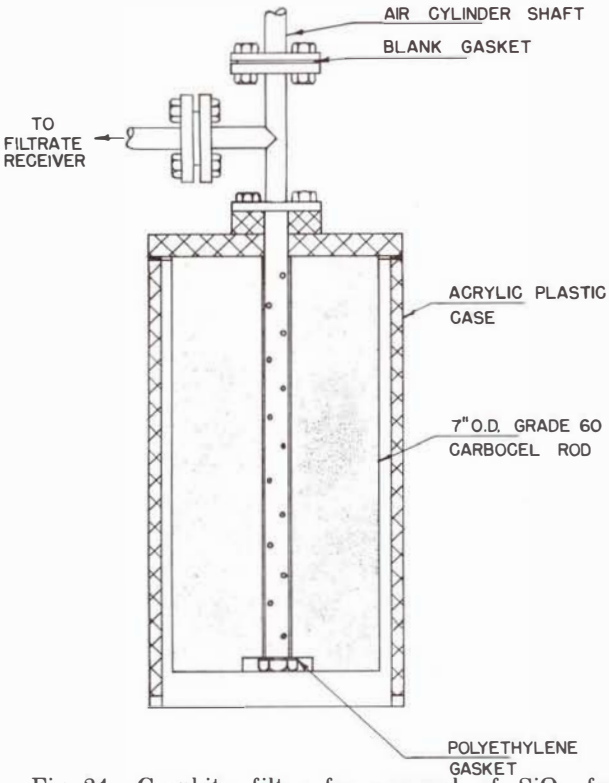


Fig. 24. Graphite filter for removal of $SiO_2$ from dissolved crucible solutions.

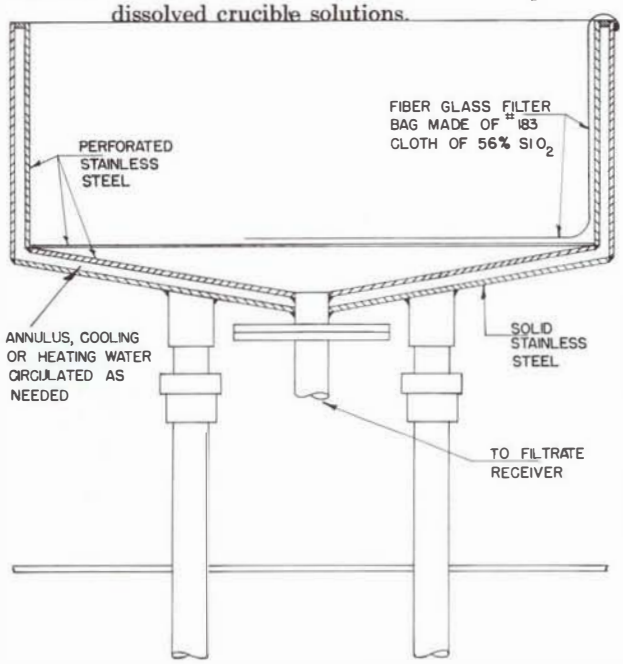


Fig. 25. Glass cloth filter for removal of $SiO_2$ from dissolved crucible solutions.

## 5.4 Geometrically Favorable Dissolvers

The diameter of the dissolvers used prior to 1958 was such that the presence of > 1000 g of plutonium could have led to a criticality incident, especially if the presence of an unsuspected large quantity of plutonium was accompanied by the addition of water instead of the $HNO_3$-$Al(NO_3)_3$ solution. Even though the crucible material was visually inspected before loading into the dissolvers, there was always the possibility that far more plutonium could be loaded than desired. The amount of plutonium credited to the crucible material was from "by-difference" numbers and therefore was far more suspect than if the plutonium value had been set on the basis of an actual analysis.

Therefore, in 1958, the decision was made to design, fabricate, and install geometrically favorable dissolvers. The shape of the dissolver selected for plant installation is shown in Fig. 26. The dissolving chamber is 8-in.-o.d. Type 316 stainless steel seamless tubing, with a commercially available weld cap serving as the bottom of the dissolver. The dissolver is 6 ft high and has been judged to be safe to a plutonium concentration of 16 kg in solution or 4 kg as solids.

The dissolving chamber is surrounded by a 10-in.-i.d. stainless steel pipe, thus giving an an-

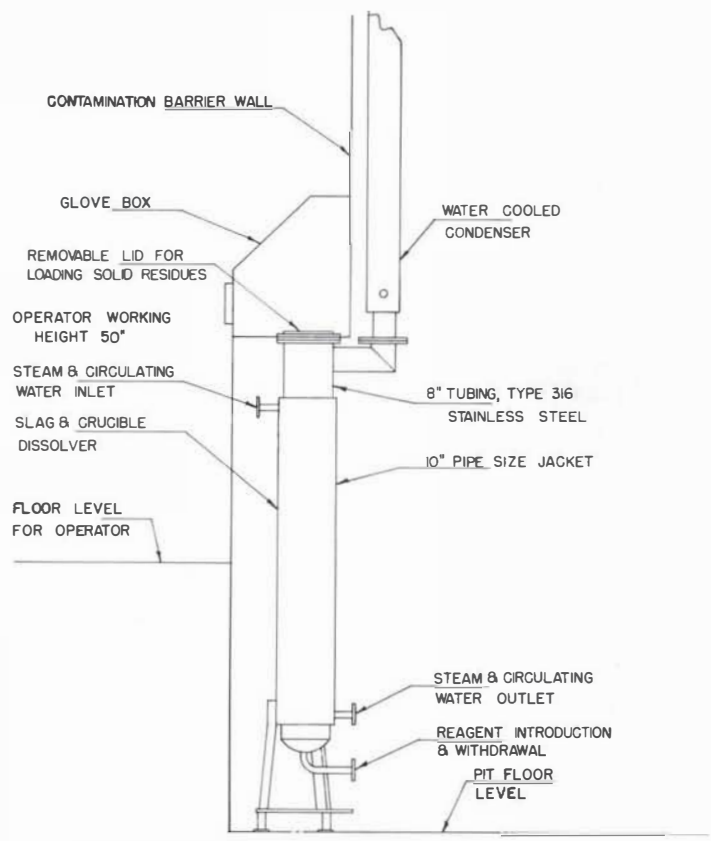


Fig. 26. Geometrically favorable crucible dissolver.

nulus of 1 in. to serve as the steam jacket. In calculating the amount of plutonium that would be safe in these dissolvers. it was assumed that the annulus would always be filled with water (either as coolant or as steam condensate) and that. therefore, the dissolver would always have nominal reflection. The crucible material charged to the dissolver for each dissolution represents the residue from four 400-g plutonium metal reductions. Assuming the worst situation—that no reduction had occurred and that this fact had not been noted—the maximum amount of plutonium that could be loaded would then be 1,600 g. If an operator were to inadvertently run a double batch, the dissolver would contain 3,200 g which would still be less than the amount needed to form a critical mass. Because this would require more than two unrelated events to occur before a critical mass could be formed. it was deemed that the 8-in.-diam dissolvers would provide an adequate safety margin.

These dissolvers were installed in the same manner as the 50-gal. dissolvers (Section 5.2). Because the height of the 8-in.-diam dissolvers was so much greater than that of the 50-gal. dissolvers. and because it was preferred that the dissolvers be loaded through the bottom of the glove box, the area back of the dissolver glove boxes was excavated and rebuilt as shown in Fig. 26.

The crucible material is loaded into a screened bucket, the bucket is lowered to the bottom of the dissolver. the lid is bolted in place. and the first addition of solution is made through the dip tube. If the dissolution of the MgO sand by the $HNO_3$ does not start immediately. then steam is sent through the annulus to heat the reaction mixture enough to start the dissolution. Other residues. such as incinerator ash. Al-10% Pu alloy. and iron lids from reduction bombs. are loaded with the crucible material.

Foaming. which at times had been quite severe when using the 50-gal. dissolvers. was expected to be more severe in the 8-in.-diam dissolvers. In actual operation. however, it was found that foaming was much easier to control in the new dissolvers.

After the initial addition of solutions. air is introduced through the dip tube to sparge the solution and to aid in the oxidation of the $I^-$ to free $I_2$ and to carry it through the condenser (heated by the reaction) to the NaOH scrubbing towers. The design of the scrubbing towers is shown in Fig. 27. The procedure for operating these dissolvers is shown in Fig. 28. Experimental

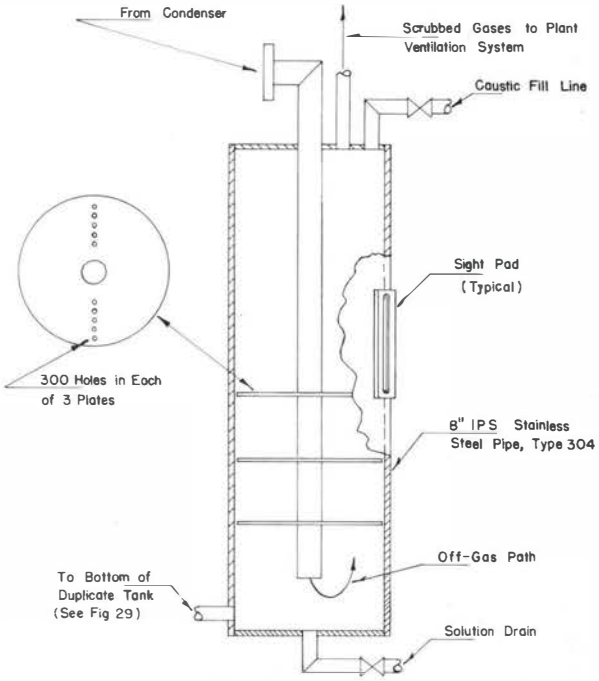


Fig. 27. Caustic scrubbing towers for crucible dissolvers.

runs showed that ~3 hr were needed for the loading and introduction of the first solutions and for the initial exothermic reactions to subside. These runs also showed that ~2 hr were needed to remove all the iodine and that the heat evolved during the exothermic portion of the reaction would heat the condenser enough to prevent condensation of iodine, as long as no chilled water was flowing through the condenser or dissolver. After determining that 2 hr of reflux were needed to dissolve all of the crucible chunks. it was deemed best to run the dissolvers on a 24-hr cycle. Thus, the removal of the iodine could be accomplished during the night by air-sparging and the dissolver would be ready in the morning for the next reflux step. A flow sheet of the process is shown in Fig. 28. The rate-controlling step is the removal of the iodine. This removal is accomplished in much less time than the 16 hr allowed for this step, but because iodine removal occurs during the night. the extra air sparge time was used to make the procedure cyclical.

After the slurry is refluxed for 2 hr the next morning. the solution is pulled through the dip tube to overhead tanks behind the bulkhead. as shown in Fig. 29. These tanks enable the operator to feed the solution by gravity to the drum filter shown in Fig. 30. The filter medium is a double layer of 37 × 37 thread count, 1/1 plain weave, spun-staple Dynel with a weight of 6.75 oz per sq yd. With the use of this drum filter, which was designed in cooperation with Eimco Filter Co. of

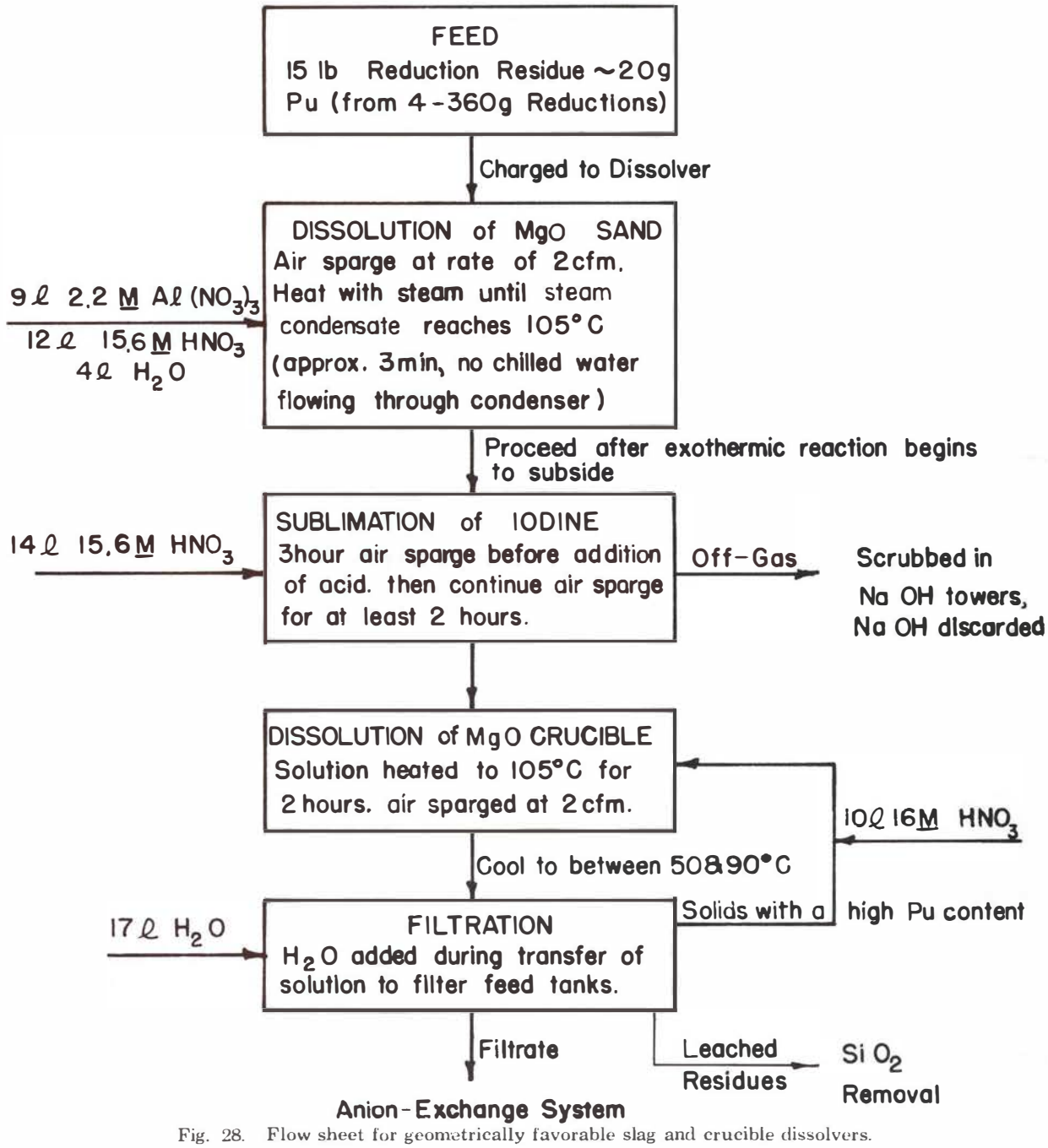


Fig. 28. Flow sheet for geometrically favorable slag and crucible dissolvers.

Salt Lake City, Utah, all solutions from the three dissolvers can be filtered in less than 1 hr. The filtrate is clear and is immediately ready for the feed treatment step where the plutonium is stabilized in the tetravalent state by the urea-$NH_2OH$-$NaNO_2$ method discussed in Section 8.3. High plutonium content residues from the filtration are put back in the dissolver or a 5-liter dissolution vessel and leached by refluxing with 12*M* $HNO_3$ at 105°C for 2 hr. After filtration the leached residues are transferred to the hydrofluorination system for removal of the $SiO_2$, described in Section 6.4.

The filtrate is combined with the initial filtrate and transferred to the feed treating station of the nitrate-exchange system. The amount of acid and $Al(NO_3)_3$ solution added during the dissolution process is so selected that the fluoride from the reduction material is complexed to prevent corrosion of the stainless steel, and so that the final filtrate is ~2*M* in free acid. If the acidity is greater than 3*M*, the stabilization of the tetra-

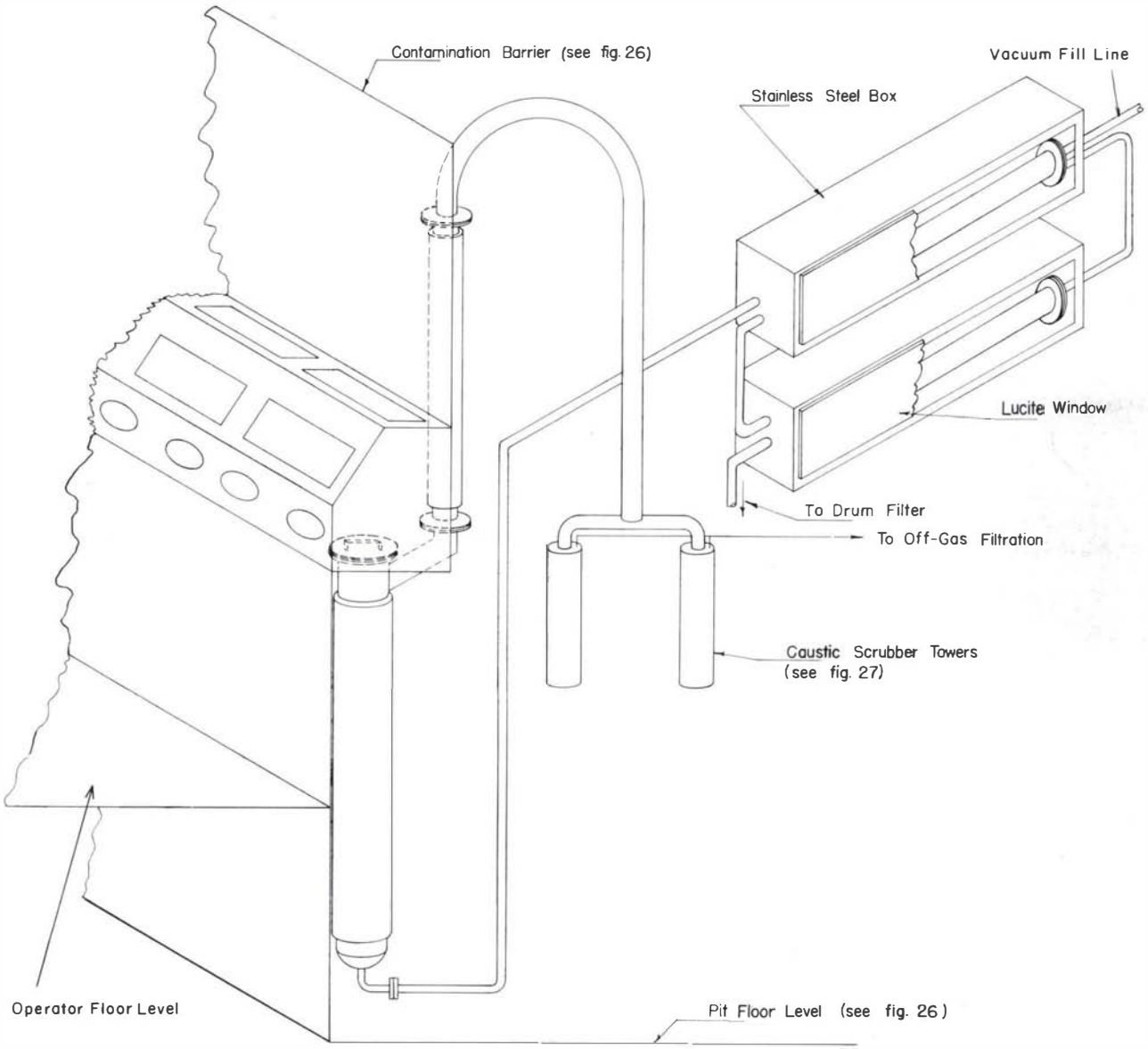


Fig. 29. Installation of crucible dissolver, filter feed tanks, and scrubber tower.

valent plutonium becomes difficult with the reagents mentioned above. (See Section 8.3.) After digestion, the solution is brought to 5.5*M* in $HNO_3$ by the addition of 15.6*M* $HNO_3$. This $HNO_3$ concentration is satisfactory for feed to a nitrate anion-exchange column, provided that the total $NO_3^-$ concentration is near 12*M* because of the $Al(NO_3)_3$ that has been added. This solution is then sampled for plutonium accountability and transferred to a storage tank pending receipt of the analytical data. When the analytical data are received, the solution is fed to the nitrate anion-exchange columns in this system.

## 5.5 Dissolution of Casting Residues

The MgO-2% $SiO_2$ casting crucibles are processed in the dissolving equipment described above, using a modified procedure because no iodine is present in these residues. These residues do not contain fluoride and, therefore, no $Al(NO_3)_3$ is added. Thus the weight of MgO crucible that can be dissolved in each step can be greater than the weight of reduction residues in the previous process without exceeding the solubility limit of nitrate salts. The procedure for these residues is shown in Fig. 31. The dissolution procedure can be cyclical if dissolution of the crucible fines is started early enough in the afternoon so that the exothermic reaction will begin to subside before the end of the working day. The solution can then be air-sparged during the night, accomplishing enough dissolution with the residual heat of reaction so that all the crucible chunks will be dis-

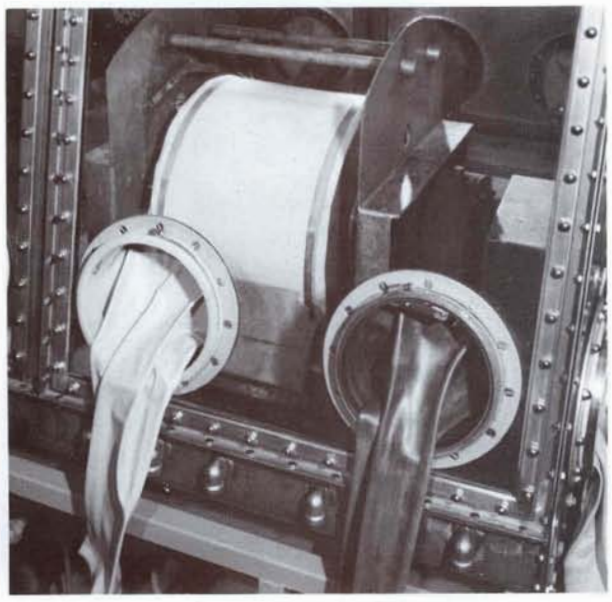

Fig. 30. Drum filter for $SiO_2$ removal.

solved during the 3-hr reflux the next morning. This method permits the maximum time for loading and unloading the dissolver, the most critical periods in the procedure. Usually, an attempt to shorten the procedure by continuing to apply heat during the dissolution of crucible fines will result in such a violent reaction that solution will be forced over into the caustic scrubbers with the resultant task of reprocessing a large volume of solutions.

After dissolution, the slurry is transferred to the overhead filter feed tanks, along with the last addition of 17 liters of water, for filtration in the same manner as for solutions obtained from reduction residues. The filtrates are transferred to the plutonium stabilization step of anion-exchange systems described in Section 8.6. The residues are transferred to the hydrofluorination system described in Section 6.4 for conversion of the $SiO_2$ to the volatile $SiF_4$.

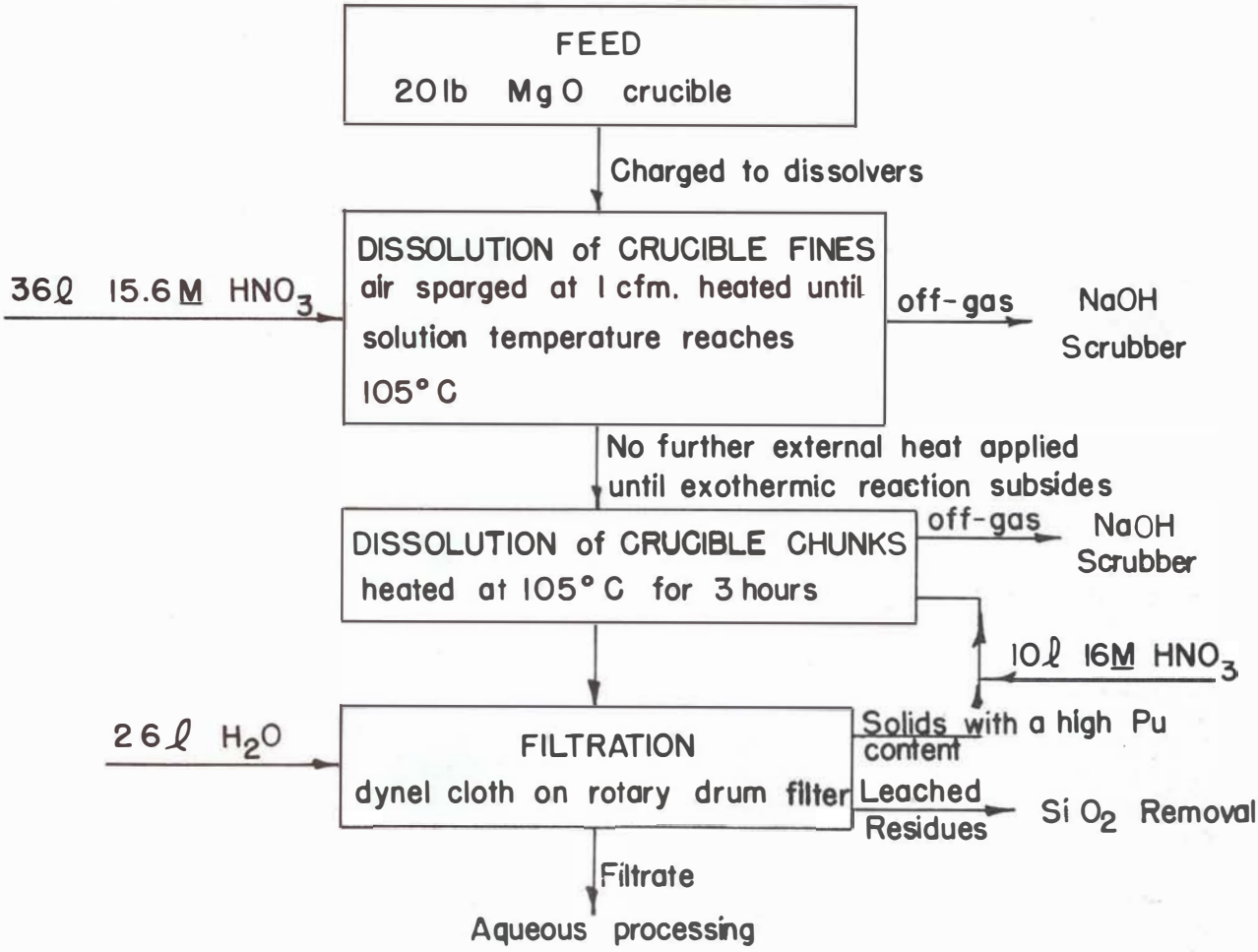


Fig. 31. Procedure for dissolution of MgO casting crucibles.

# Chapter 6. PROCESSING NONCOMBUSTIBLE RESIDUES

## 6.1 Classification of Residues

At Los Alamos, the noncombustible residues are arbitrarily divided into two classes: those that can be decontaminated by an acid leach of the surface, and those that must be decontaminated by an acid dissolution of plutonium salts, mainly $PuO_2$; the latter are usually intimately mixed with similar sized particles of nonradioactive materials such as silicates.

## 6.2 Surface Contaminated Items

Items such as tantalum molds and crucibles, sintered glass frits, stainless steel filters, and $Al_2O_3$ crucibles are generally cleaned of plutonium by refluxing with a solution of $10M$ $HNO_3$-$0.05M$ HF for 2 to 4 hr. The acid is drained from the reaction vessel through a filter, usually a Büchner funnel with medium sintered glass frit, and the leached items and solids on the filter are rinsed with water or dilute $HNO_3$. The rinsed items are then monitored with a $\beta$-$\gamma$ meter of the Victoreen variety and discarded if little or no radioactivity is detected, or recycled to reduce the radioactivity to acceptable levels. Items to be discarded are monitored again for plutonium content by measurement of the neutron emission before disposal. Equipment for the leaching process generally consists of a 5-liter round-bottom glass flask modified as shown in Fig. 15.

Contaminated media from the absolute filters used in the air exhaust system are leached once with $10M$ $HNO_3$ and then transferred to the hydrofluorination system discussed in Section 6.4 for $SiO_2$ removal.

The remaining items that require a surface leach, such as metal dies, containers, and plastic bags, are processed in equipment that is compatible with the shape, weight, and size of the item being processed. Items such as cast iron reduction bombs or metal dies can often be quickly decontaminated by dipping them into $8M$ $HNO_3$ until the surface reaction is general and then rinsing them with water to stop the reaction. Large items that are too unwieldy for dipping are cleaned in a plastic tray by scrubbing them with $8M$ $HNO_3$ or, in rare cases, $6M$ HCl. As with other processes, the leach solutions are assayed for plutonium content and transferred to a recovery system that is compatible with the anion present. The leached items are monitored for plutonium contamination and either recycled or discarded.

Plastic items vary in size from the small metallurgical mounting blocks to large (>26 in. diam by 6 ft long) plastic bags. The metallurgical mounting blocks are usually so deeply contaminated that they must be burned rather than leached. By heating the blocks in a muffle furnace at that temperature at which the vapor pressure of the plastic approaches atmospheric pressure, and with a large flow of air passing over the beaker, the plastic can be removed, leaving only an impure oxide of plutonium to be leached.

Plastic bags are monitored for plutonium contamination and discarded if the $\beta$-$\gamma$ emission is trivial or they are cut into strips and leached either with hot $10M$ $HNO_3$-$0.10M$ HF using an air bubbler to provide agitation in equipment similar to that shown in Fig. 15 or with $10M$ $HNO_3$ at room temperature with the equipment shown in Fig. 32. The plastic strips are agitated by the flow induced by the high-speed discharge of the recirculating acid pump. After treatment of a batch of plastic strips, the basket is raised, drained dry, and then rinsed with water in a second unit. The leach and rinse solutions are periodically filtered, analyzed, and processed in one of the ion-exchange systems. The leached plastic is rinsed with water and monitored for $\beta$-$\gamma$ radiation as an indication of plutonium contamination to determine whether to discard or recycle. If the contamination is localized, as determined by monitoring, such a spot is cut out and burned in the incinerator.

Rubber items, particularly dry box gloves, generally can be adequately decontaminated by wiping them with a cloth wetted with water or dilute $HNO_3$. The sooner this operation is performed after removal of the items from service, the easier is the decontamination operation. Items that have been compressed in storage for a long period will generally require leaching in the agitator (Fig. 32) or monitoring and removal of hot spots for incineration. (Routine incineration is not practiced because all incinerator systems investigated volatilized far too many tars that would escape with the off-gases before complete ignition could occur, thus rapidly plugging any filter system that may be placed downstream.)

The training of operators to wipe the surfaces of rubber gloves immediately after removal has resulted in the discarding of >99% of such items on the basis of both $\beta$-$\gamma$ and neutron monitoring.

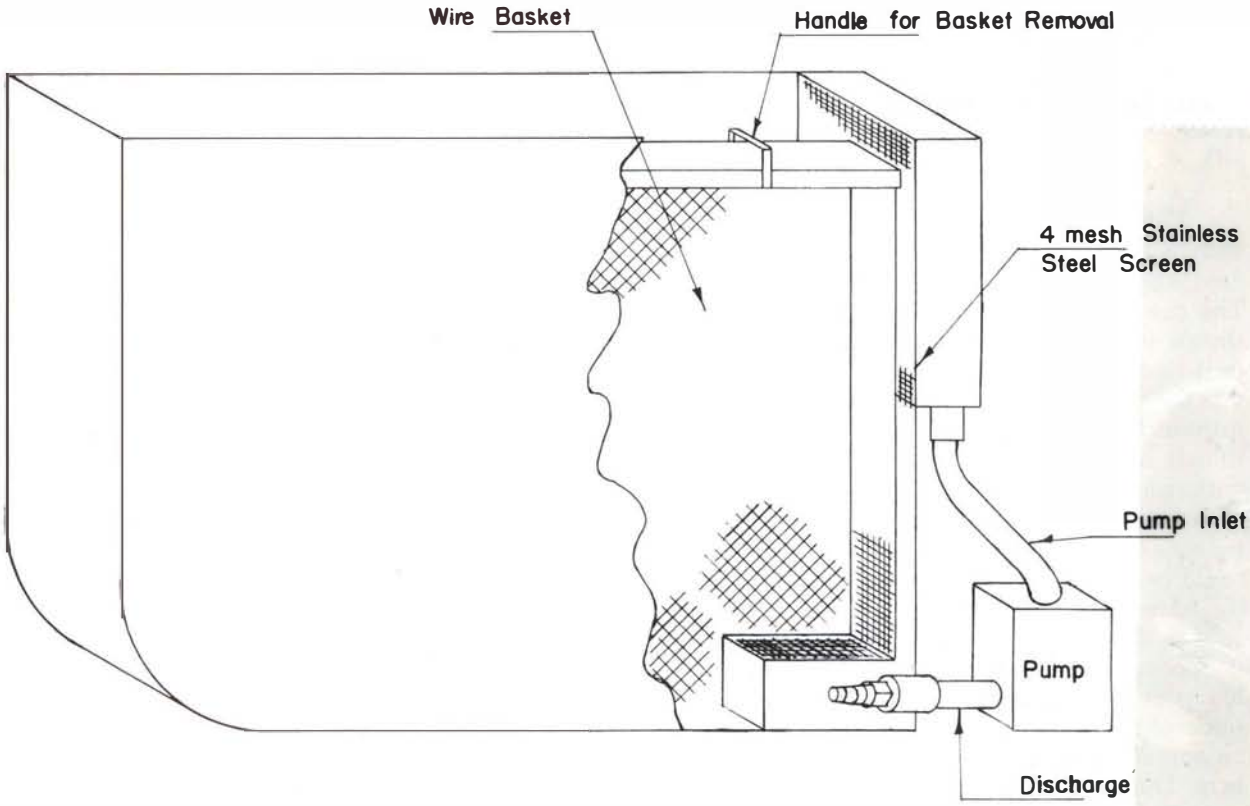


Fig. 32. Equipment for leaching plastic strips.

## 6.3 Incinerator Ashes

Ashes from the incineration of rags, paper, wood, and other combustibles contain appreciable quantities of plutonium varying from 0.2 to 57% by weight. For this reason, considerable effort has been spent to determine the optimum recovery method.

In 1953, investigative work showed that the ashes, even though heated to ~350°C in the incinerator, contained an appreciable quantity of water-soluble carbonates.[65] It was shown that the reactive carbonates could be removed by a water or acid leach or by heating to 600°C for 1 to 2 hr in a stream of air. Since it was usually difficult to obtain good air contact with each particle of ash without the construction of special furnaces, it was decided to use a water or acid leach as the first step in the process.

Various reagents were then tried in an effort to dissolve the $PuO_2$ that was formed during incineration. Solutions of HCl-KI were found to dissolve a considerable portion of the $PuO_2$, but were abandoned because of corrosion by the chloride ion and the free iodine, formed rapidly by air oxidation of the iodide. The experimental study of the reaction between various HCl-KI mixtures and $PuO_2$ was reported by Bjorklund in 1954.[41]

Other solutions were tried in 1953, including NaOH metathesis, HBr, $HNO_3$, $HNO_3$-HF, $H_2SO_4$-HF, and $HNO_3$-$Al(NO_3)_3$.[65] The experimental data showed that even though all these solutions would solubilize the plutonium to some degree, only two, $HNO_3$-HF mixtures and HF, showed promise for a production process. The corrosion problems involved in handling 47% HF solutions were, as expected, severe; subsequent development work was therefore limited to the $HNO_3$-HF system.

By 1954, experimental data as well as production data had firmly established that the best procedure involved successive leachings with fresh portions of 10*M* $HNO_3$-0.5*M* HF.[65] Dissolution rates could be improved for particular batches by varying the molarity of the constituents of the leach solution, but not enough improvement was achieved to warrant the expenditure of manpower to determine optimum concentrations for each small batch. Therefore, the process selected for routine production leaching of incinerator ashes was based on a water or acid leach to remove

carbonates, successive leachings with 10*M* $HNO_3$-0.5*M* HF until the plutonium concentration of the leach solution had decreased to less than 1 g/liter, and a final water leach to remove the $HNO_3$ prior to hydrofluorination to remove the $SiO_2$.

This leaching procedure was used in 1960 with a cascade dissolver to process several hundred kilograms of ashes at the rate of 500 g/hr. The cascade dissolver, a line drawing of which is shown in Fig. 33, was based on the design of a unit that was operated at Rocky Flats Division of the Dow Chemical Co.[66] The point and rate of introduction of the various solutions are also shown in Fig. 33. The ashes were not leached with water or dilute acid before introduction to the cascade dissolver, because this would involve a tedious drying step before the ashes or residue could be introduced at a continuous uniform rate. By adding the 10*M* $HNO_3$-0.5*M* HF in the first section, dissolution of $PuO_2$ would start immediately. Because of the large quantity of acid-consuming components in the ashes, it was found that some of the acid had to be replaced to maintain an appreciable dissolving rate in each of the chambers. The large amount of $F^-$ present continued to corrode both glass and stainless steel equipment after leaving the dissolver. This corrosion was prevented by adding an $Al(NO_3)_3$ solution at the 15th stage.

Maintenance of the dissolver has been limited to replacement of the stirring rods and propellers, which wore away rapidly when the ashes contained carborundum. During continuous operation over a 12-month period, the corrosion rate was so low that the dissolver remained inviolate. The resulting slurry was filtered through graphite cylinders. The filtrate contained from 1 to 20 g of plutonium per liter and was transferred to an ion-exchange system for removal and purification of the plutonium. The solids were transferred to the hydrofluorination system for removal of the $SiO_2$.

The quantity of ashes produced has decreased to the point where it is not practical to operate the cascade dissolver and, hence, ashes are now being processed on a batch basis. The procedure consists of a dilute $HNO_3$ leach to remove the more soluble items, a water leach to remove the $HNO_3$, a hydrofluorination to remove the $SiO_2$, and, finally, a fusion with $K_2S_2O_7$-NaF to remove the remaining plutonium. The fusion process is discussed in Section 6.5.

## 6.4 Silica Solids

The need for a method to remove $SiO_2$ became apparent with the first dissolution of MgO reduction crucible in which $SiO_2$ was used as a binder. Silica also enters the process stream as a

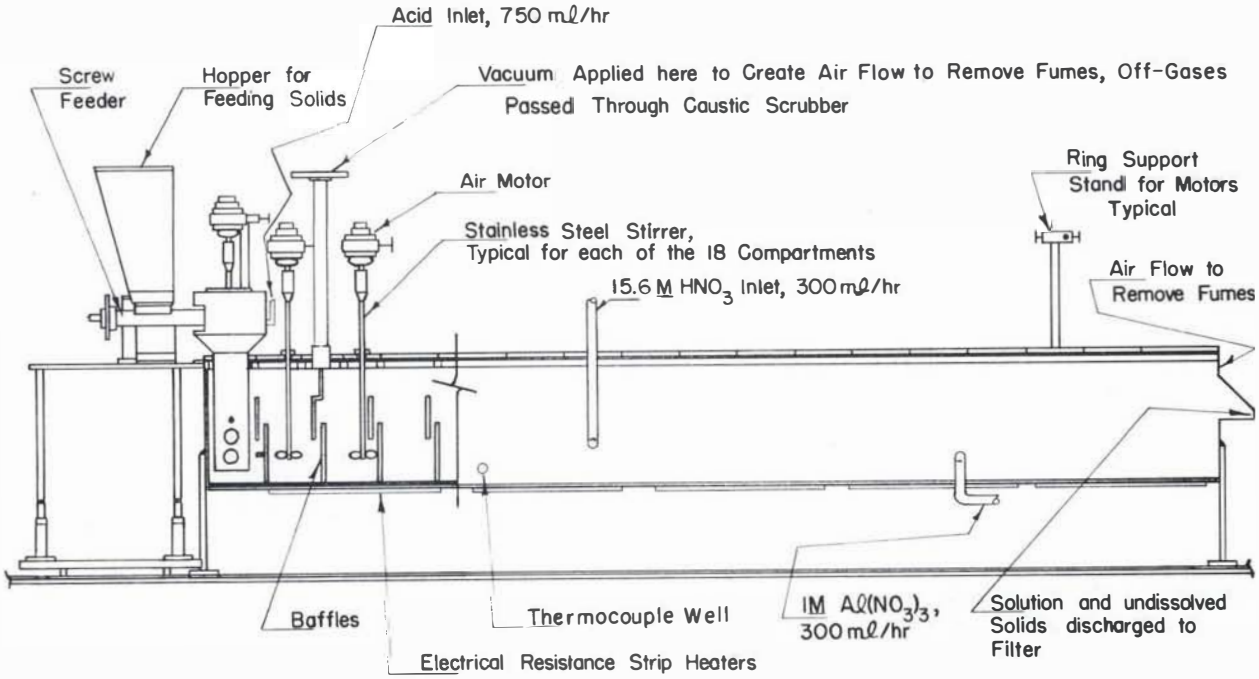


Fig. 33. Cascade dissolver for leaching solids.

result of widespread use of various $HNO_3$-HF mixtures in glass equipment. As is well known, there is a considerable amount of postprecipitation of silica from acid solutions, especially when the acid or salt concentrations are adjusted. Even if a method could be devised to completely remove the $SiO_2$ from the solutions obtained from dissolving reduction crucibles by dehydration and filtration, for example, $SiO_2$ would still appear in other areas because of the large-scale use of glass equipment in the presence of HF.

Investigation of various methods and consideration of the extremely varied types of solutions that are encountered led to the decision to remove the $SiO_2$ by filtration, a method that is compatible with every conceivable recovery solution. In-line filters placed just ahead of ion-exchange columns, for example, would protect the resin while collecting a residue which would be similar to the solids from filtration of reduction crucible dissolver solutions. In this manner, silica removal could be treated as a single problem rather than as a variable changing with each type of feed solution.

Because the silica was now in the form of a solid residue, the known reaction of HF with $SiO_2$ to form the volatile $SiF_4$ appeared to be a promising line of investigation.[67] Experimental work showed that the $SiO_2$ could be removed by hydrofluorination with only an insignificant loss of plutonium.[67, 68] The process in 1951 consisted of heating the $SiO_2$ to 400°C for 12 to 18 hr to drive off water and $HNO_3$, and then passing gaseous HF through the solids at the rate of 500 g of HF per hour for 15 hr with the furnace under a vacuum of 1 to 2 in. of Hg to aid in volatilizing the $SiF_4$ that was formed.[68]

The design of the first production-scale furnace was completed in 1952; the furnace was installed shortly thereafter. This system employed a large-diameter, shallow tray as the reaction chamber. Operation of this unit showed that it was difficult to seal against the upper lid when the tray was lifted into position by an air cylinder and that the method of passing the gaseous HF over the surface of the solids gave such poor contact with the solid particles that only a small portion of the $SiO_2$ was removed.

In 1953, the design of the furnace was changed to that shown in Fig. 34, a unit that employed a small-diameter tube and end plate system that allowed the gaseous HF to be passed in at the bottom, through the residue bed, and out the top, carrying the volatile $SiF_4$ with the off-gas stream.[69] The $SiF_4$ and excess HF were scrubbed from the off-gases by the caustic scrubber shown in Fig. 35 before the off-gases came in contact with the stainless steel pipes and pump. Corrosion beyond the scrubber has been trivial, as evidenced by the maintenance-free operation of the pump for an average of 2 runs per day over a 12-year period.

Although this furnace so improved the efficiency of $SiO_2$ removal by hydrofluorination that by 1954 the process had been shortened to an 8-hr run at 150°C, the operation still was not satisfactory. Therefore, an experimental program was started in 1954 to determine the water content of silica solids that would result in the most rapid reaction rate.[70] It soon became apparent that temperatures of $\geq$ 150°C during hydrofluorination reduced the rate of removal of $SiO_2$. Experiments were made on silica cakes containing 23 to 92% moisture with various drying and hydrofluorination temperatures and various flow rates of gaseous HF. The data from these runs showed that silica solids with an apparent moisture content of ~60% resulted in the most rapid and complete removal of $SiO_2$ and, by starting the hydrofluorination at room temperature and not adding heat other than that provided by the heat of reaction, that the reaction would be complete in 20 to 30 min. The present equipment consists only of the reaction tube and caustic scrubber system. The flow sheet for this process is shown in Fig. 36.

The residues to be processed are leached with water to remove all the $HNO_3$ and nitrate salts that may be present because Hastelloy "C" is corroded quite rapidly by $HNO_3$. The leached residues are dried to ~60% water content by heating them in a tray on a hot plate until the solids just lose their gummy quality. Analyses of the dried product from several runs showed a water content ranging from 58 to 71% by weight.

The dried residues are placed in the 4-in.-diam tube reaction chamber made of Hastelloy "C" shown in Fig. 34. The bottom filter is a porous platinum frit and the top filters may be either a screen woven with 3-mil platinum wire, 80 to the inch, or a Kel-F porous plastic frit. The filters keep plutonium particles in the tube. The platinum filters can be readily cleaned, and reused, whereas the Kel-F filters must be discarded after a few runs because of plugging. The reaction chamber is positioned in the main tube and bolted in place, and the lids are installed to make the system ready for hydrofluorination. Gaseous HF is introduced at a rate of ~650 g/hr to the reaction chamber, which is at room temperature

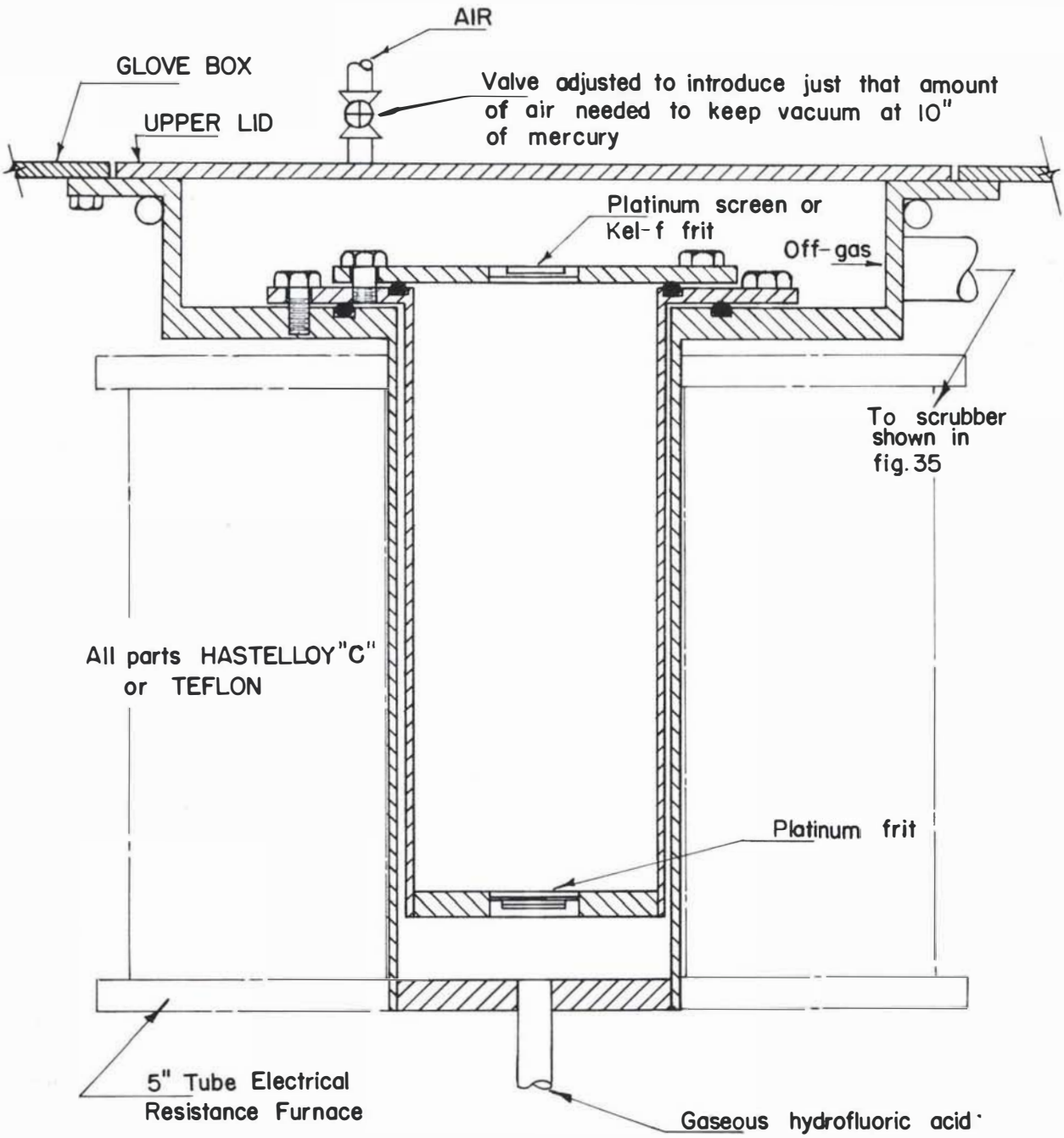


Fig. 34. Hydrofluorinator for silica removal.

when the run is started but soon warms to ~80°C because of the heat of reaction. The hydrofluorination is normally complete in 20 to 30 min, thus consuming only 325 g of HF.

Because the reaction chamber is kept under 10 in. Hg vacuum, the gaseous reaction products and the excess gaseous HF are swept out of the chamber through the caustic scrubber to the vacuum pump. Caustic solution is pulled from the caustic storage tanks to the top of the scrubber, along with the off-gases from the fluorinator. As the caustic and off-gases flow down over the baffles, the corrosive $F^-$ is removed from the gas stream by dissolving in the caustic phase. The 2*M* KOH scrub solution is also used to seal the vacuum pump. This solution is recycled until the plutonium concentration reaches $1 \times 10^{-4}$ g/liter, at which time it is discarded.

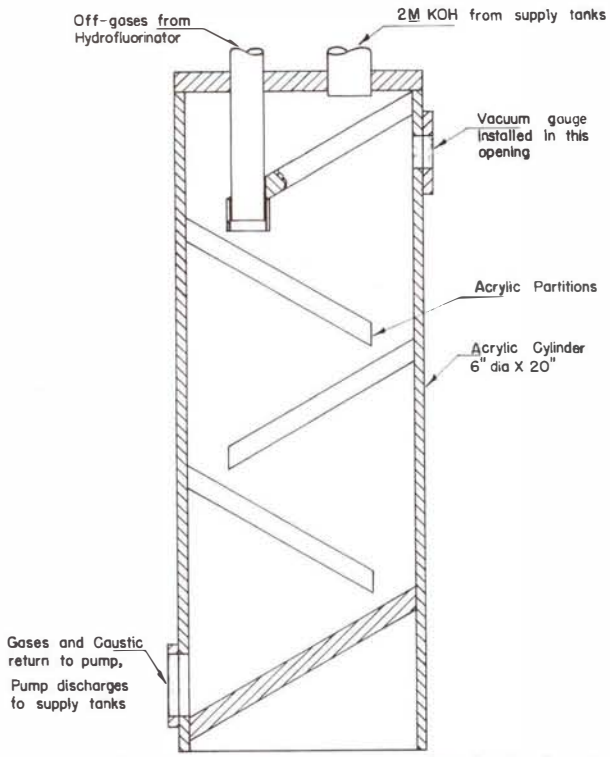


Fig. 35. Caustic scrubber for removing hydroflouric acid from off-gases.

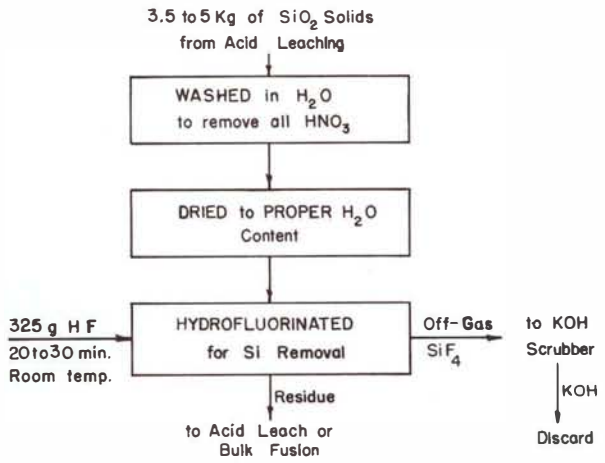


Fig. 36. Hydrofluorination system for silica removal.

After the hydrofluorination has been completed, the reaction chamber is immediately unbolted and removed from the fluorinator. The reaction residues, mainly carborundum solids and some water, are filtered using a graphite cylinder so that the residues can be leached with $HNO_3$-$Al(NO_3)_3$ to dissolve any $PuF_4$ that may have been formed. This leach solution often contains as much as 3 g of plutonium per liter of solution. The leached residues are transferred to the bulk fusion system for final processing.

When feed to the crucible dissolver system consists solely of standard reduction residues, the fluorination residue will amount to ~1% of the leached residue and the leached residue will be about 0.1% of the weight of original reduction residues dissolved. All leach and scrub solutions that contain more than 1 mg of plutonium per liter are transferred to an ion-exchange system for processing.

## 6.5 Acid Insoluble Residues

During early work with plutonium, it was realized that a method other than leaching with acids would be needed for refractory oxides and residues for which leaching was uneconomical or infeasible. Incinerator ash residues fall into this category because, after 3 or 4 leachings with fresh portions of $HNO_3$-HF, the amount of plutonium dissolved with each successive leach decreases to less than 1 g/liter or about 5% of the plutonium that was in the solids. Other residues difficult to leach to the discard level were $Al_2O_3$ tubes and crucibles, carborundum solids, etc.

In 1944, Pittman *et al.*[5] reported that the most efficient method for dissolving plutonium oxide or carbide involved a fusion with $K_2S_2O_7$ at a ratio of 8 parts flux to 1 part oxide or carbide. The mixture was heated at ~800°C until the molten material solidified. After cooling the mass to room temperature, it could be readily dissolved in water or dilute HCl. However, this fusion became less effective as the impurities in the material to be dissolved increased. Work showed that this fusion method could be used on many plutonium- or uranium-contaminated residues, even reduction residues, by increasing the flux-to-residue ratio. Work on this topic was not resumed until 1950, when experiments involving fusions with either pyrosulfate or NaOH were made.[71]

Development continued sporadically during the next year, trying various salts as a flux for the fusion, including $Na_2CO_3$, $K_2CO_3$, NaOH, KOH, $NaHSO_4$, $NH_4F$, $(NH_4)_2S_2O_7$, and mixtures of $K_2S_2O_7$ and NaF. In 1951, Johnson and Pritchard reported[44] that the best solubility was obtained with a flux of 10 parts $K_2S_2O_7$ to 1 part NaF, using 6 parts of this mixture to 1 part plutonium residue and heating at 550°C for 2 hr. This melt readily dissolved in an $HNO_3$-$Al(NO_3)_3$ mixture. Fusion with $NH_4F$ also resulted in the conversion of the plutonium to an $HNO_3$-soluble form, but the problems caused by the volatility of the $NH_4F$ led to its abandonment. This $K_2S_2O_7$-NaF fusion procedure was used during the next few years mainly as an analytical tool in refractory $PuO_2$

analyses or in the recovery of a few refractory $PuO_2$ pellets in platinum crucibles.

In 1959, the accumulation of acid-insoluble residues reached such proportions as to force attention to the need for a large-scale fusion process. It was felt that the chemical problems involved in the scale-up would be insignificant, but that the container would possibly be a limiting factor. To be sure, large size platinum crucibles could be fabricated, but their cost would greatly reduce the economical advantage of the fusion process over a leaching process. An exploratory program to find a satisfactory container resulted in the selection of Hastelloy "C" for the construction of the fusion crucibles. Process data accumulated since then have shown that this material is resistant to corrosion by the $K_2S_2O_7$-NaF fusion mixture.[72] With such information available, equipment, including a 5-in.-diam pot furnace, was installed in 1961 for handling Hastelloy "C" fusion crucibles. The crucibles were made by welding a ⅛-in. thick plate on one end of a 10-in. piece of 4½-in.-o.d. tubing (⅛-in. wall thickness) and drilling two holes near the open end for insertion of a lifting bail. The volume of these crucibles was sufficient to allow the processing of 250 g of residue per batch and still allow ample freeboard for the foaming that sometimes occurs during fusion.

After the fusion melt has cooled to room temperature, it is loosened with the aid of a ¼-in. pistol-grip air hammer and transferred to a 6-in.-diam glass tube dissolver equipped with a stainless steel steam coil. With this equipment, shown in Fig. 37, the melt is readily dissolved in 10*M* $HNO_3$-0.3*M* $Al(NO_3)_3$, leaving only solids such as carborundum undissolved but nearly quantitatively free of plutonium. Analyses of residues from 175 batches have shown that the solids will contain <0.05% plutonium by weight; since the residues are less than 10% of the original bulk weight, the plutonium loss is insignificant.

This process, shown in the flow sheet in Fig. 38, has been used for over 750 batches of acid-insoluble residues, yielding discardable residues in every instance. The fluoride content has not impaired the sorption of plutonium on anion-exchange columns mainly because the fluoride has been tightly complexed by the added aluminum.

## 6.6 Graphite

Graphite residues such as filters used in the filtration of acid solutions and as molds in the fabrication of plutonium metal pieces created the need for a graphite decontamination method.

Prior to 1955, the decontamination of graphite residue was accomplished either by leaching

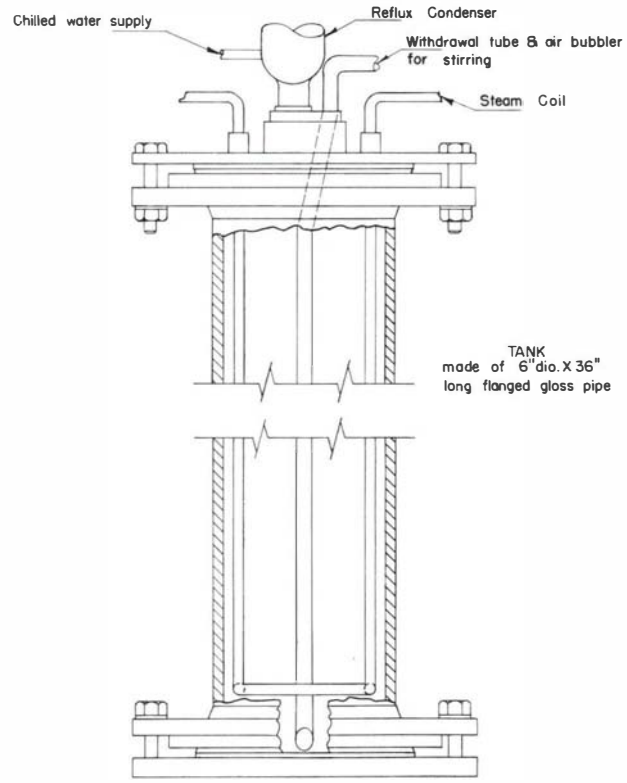


Fig. 37. Equipment for dissolving melt from $K_2S_2O_7$-NaF fusions.

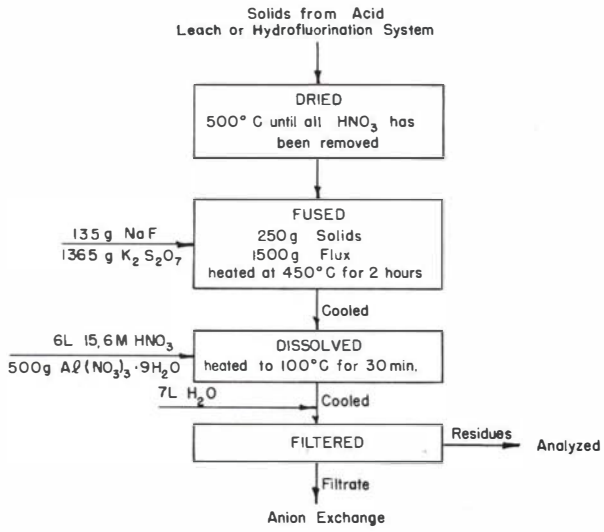


Fig. 38. Flow sheet for large-scale fusions of acid insoluble residues.

the crushed or broken pieces of graphite with $HNO_3$-HF or by ignition in a muffle furnace. Both of these methods were rather slow. As the quantity of graphite residues rapidly increased during 1951 and 1952, it became apparent that a more efficient method of plutonium recovery would be needed. Since leaching methods did not appear to offer much hope because of the deep penetration of graphite residues by plutonium, attention was turned to various methods of ignition. In 1955, experiments showed that large amounts of graphite could be burned in the same incinerator used for rags and paper.[73] This process is discussed in greater detail in Section 7.2. This method resulted in the ability to burn ~10 liters of broken graphite pieces in a stream of oxygen in about 90 min. yielding only ~40 cc of ash.[74]

While this method was being used to process graphite residues, another experimental program had been started to find a coating for graphite residues that would reduce the depth and amount of plutonium penetration. In 1960, Pritchard and Anderson published details[75, 76] of a calcium fluoride coating method that dramatically reduced the plutonium penetration. As a consequence, leaching processes appeared to offer a much faster method for removal of what was now actually only surface contamination. This was substantiated by experimental work that showed that refluxing with $8M$ $HNO_3$-$0.05M$ HF would remove all the contamination. By segregating the graphite residues according to the amount of $\beta$-$\gamma$ emission, the bulk of the graphite could be discarded without leaching.

Based on this information, the process for decontaminating graphite residues was established to include monitoring of large pieces for plutonium contamination, leaching of contaminated pieces and all fines with $8M$ $HNO_3$-$0.05M$ HF, and incineration of graphite pieces that could not be decontaminated by leaching. The flow sheet for this process is shown in Fig. 39.

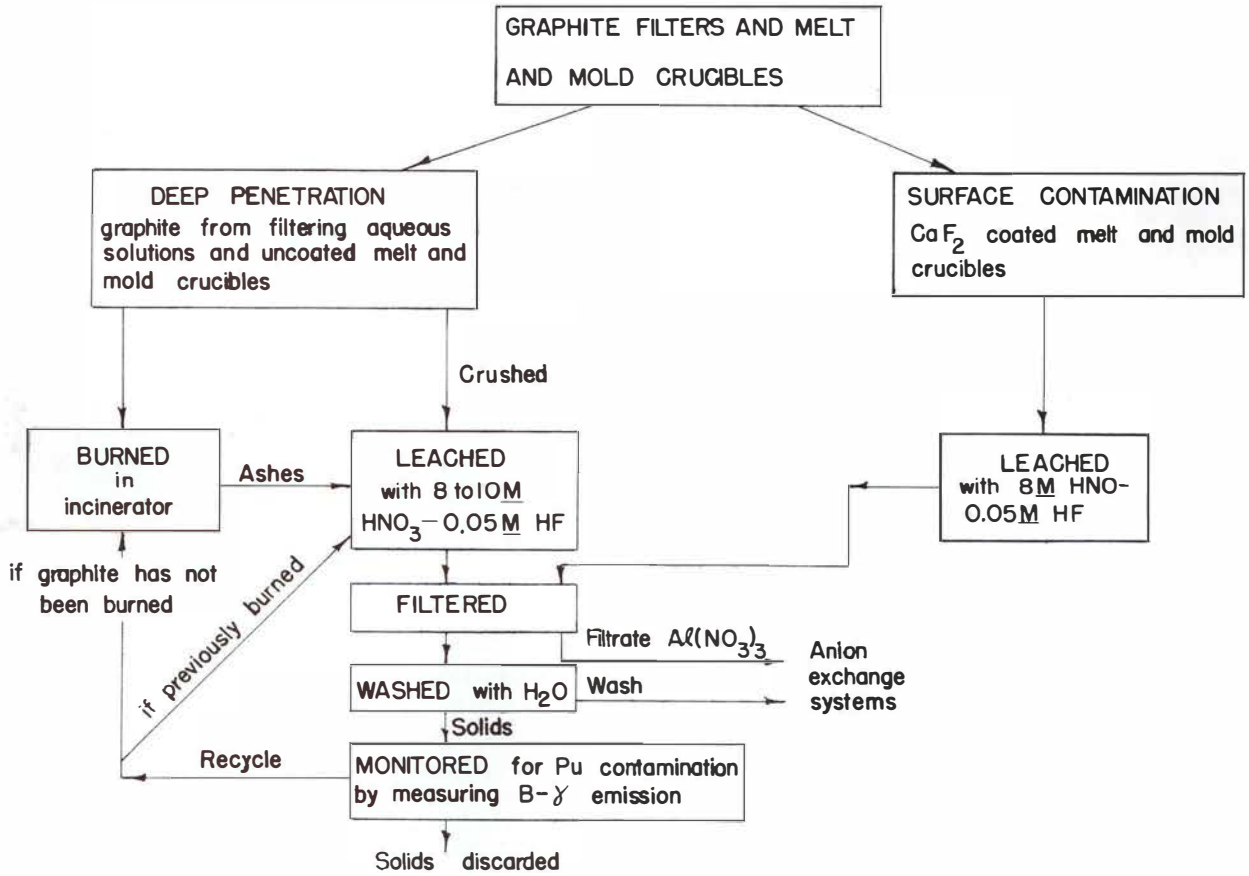


Fig. 39. Flow sheet for decontamination of graphite residues.

# Chapter 7. PROCESSING COMBUSTIBLE RESIDUES

## 7.1 Development of Incinerator for Contaminated Material

The cost per gram of plutonium recovered is very dependent upon the plutonium concentration in the residues. The more dilute the plutonium, the more the nonradioactive material that has to be processed to obtain a gram of plutonium. The ratio of the weight of the nonradioactive material to the weight of plutonium is often very much greater in solid residues, such as rags, than in solutions. The plutonium can be rather easily scavenged from solutions by ion-exchange or precipitation methods to the designated minimum concentration level. The plutonium in solid residues such as rags, paper, and wood, however, cannot be economically scavenged by a single method. Attempts were made to leach rags that were relatively rich in plutonium with various nitric acid solutions. Although leaching often reduced the plutonium content essentially to zero, the leach process required about three times more man-hours per gram of plutonium than incineration.[77]

One of the most common methods for volume reduction of residues such as rags is ignition, thus removing components that are volatilized while burning or heating to a few hundred degrees centigrade. The resulting ashes can then be processed as an impure $PuO_2$. Therefore, development work was started in 1951 on the design of an incinerator for combustible residues,[78] including paper, rags, wood, emery paper, rubber gloves, graphite, and plastics. The incinerator was installed during early 1952 and the first cold run was made in September 1952. After a few minor modifications, the incinerator was used for contaminated rags in December 1952. The design and operation of this incinerator has been reported by McNeese, Maraman, and Chronister[79] and by McNeese and Maraman.[80] A sketch of the burning chamber is shown in Fig. 40.

Operation of the incinerator soon showed that the firing pin and ignitor holder had to be cleaned after every three runs;[77] the procedure was later modified to permit igniting the combustibles with a match. When a new glove box was installed and the opening of the incinerator was moved to the floor of the box, the opportunity was taken to design a new incinerator lid, shown in Fig. 41, incorporating a venting system to prevent buildup of dangerous pressures in the incinerator due to rapid combustion. The vented gases are carried through the relief duct to the unloading section of the box where the gases could safely be allowed to expand. The remaining portions of the incinerator are the same as those reported by McNeese and Maraman in 1960.[80]

The procedure for the operation of the incinerator is given in Fig. 42. With this procedure, 12 liters of dry rags can be processed in about 2 hr, yielding 100 to 150 ml of ashes. The incinerator off-gas scrub and the vacuum seal solutions are filtered after every three to five runs and analyzed for plutonium content to determine if the solutions should be recycled or discarded.

When the incinerator was designed it was thought that rubber gloves and plastics would also be burned in this system, but operation showed that incineration of large amounts of rubber gloves and plastics resulted in such large quantities of tars in the scrubber and off-gas lines that the filter would be plugged after only one or two runs. In addition, the off-gas lines were quickly coated with tars, necessitating steam cleaning after every few runs to prevent buildup of a hazardous amount of combustible tars.

Corrosion of the incinerator was markedly increased when polyvinyl chloride bags were burned because the chloride that was released during burning formed HCl whenever it came in contact with water. Therefore, the decision was made to severely restrict the amount of plastic or rubber that could be burned to only those pieces that monitoring indicated still contained appreciable quantities of plutonium after leaching with $HNO_3$. As a result, the operation of the incinerator has become routine and the frequency of steam cleaning has declined to once for every 400 runs. Corrosion has been minimal, with the bubbler tube being the only item replaced in nearly five years of operation. Approximately 1,800 runs were made in this period.

Another source of potential trouble is the processing of cotton rags that have been used to wipe up after nitric acid spills. If the rags have been stored in that condition, a considerable quantity of nitrocellulose will have been formed. The explosiveness of the nitrocellulose is well known. During early operation of the incinerator, nearly all the rags were nitrated to some degree and, as a consequence, several minor explosions occurred, some severe enough to dislodge a portcullis-type door but not so violent as to breach

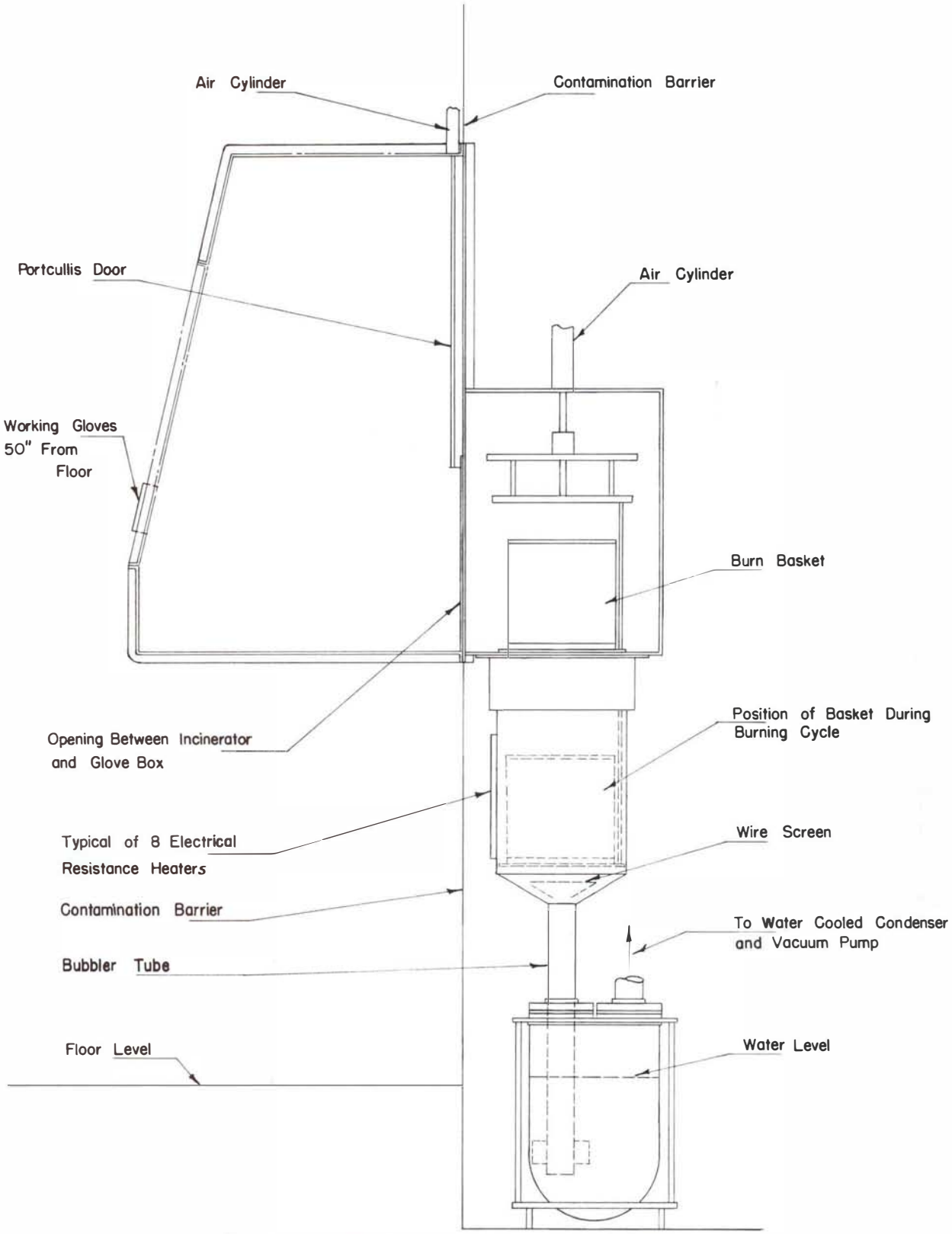


Fig. 40. Burning chamber for incinerator used through 1960.

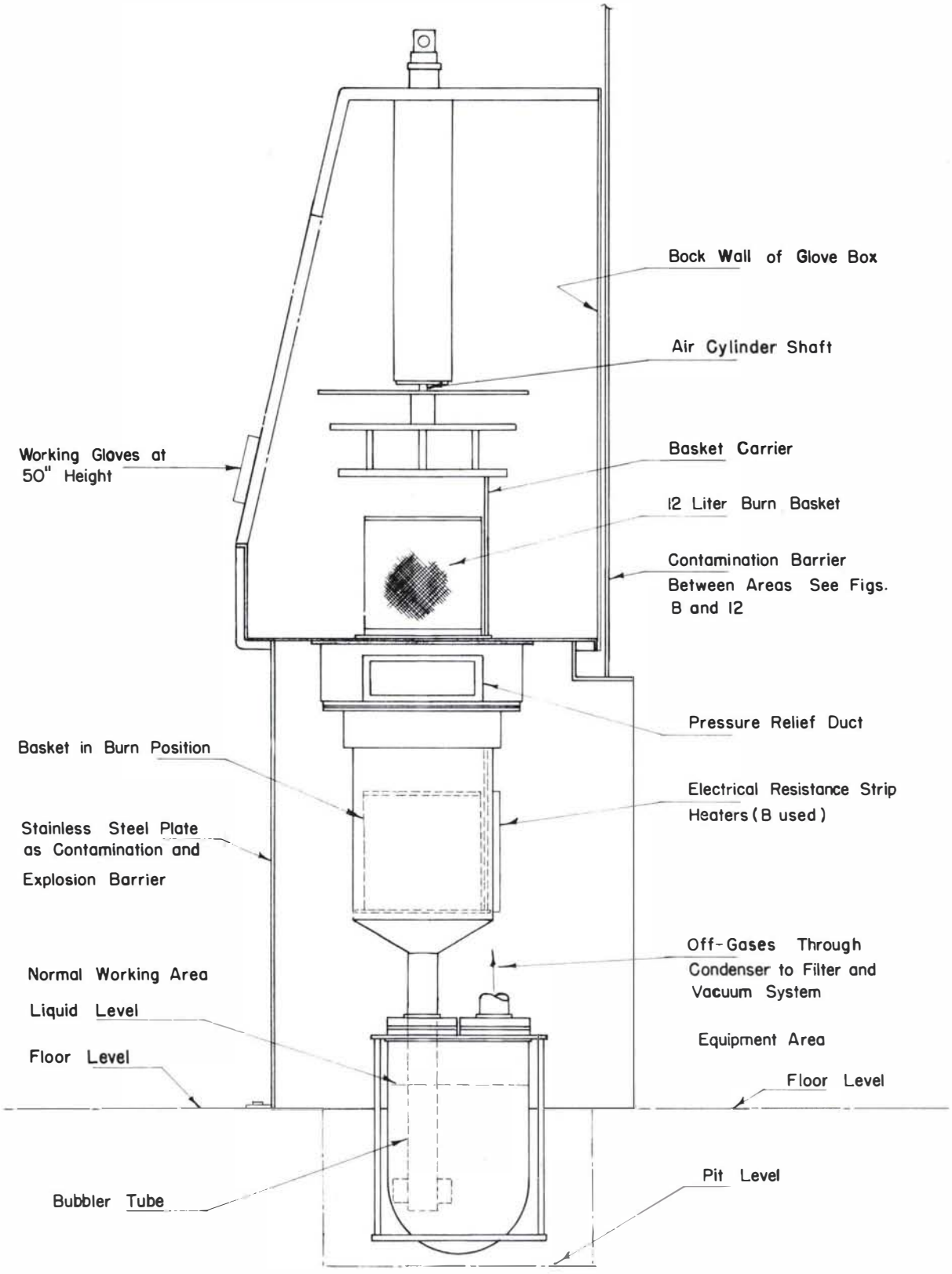


Fig. 41. Burning chamber for incinerator used after 1960.

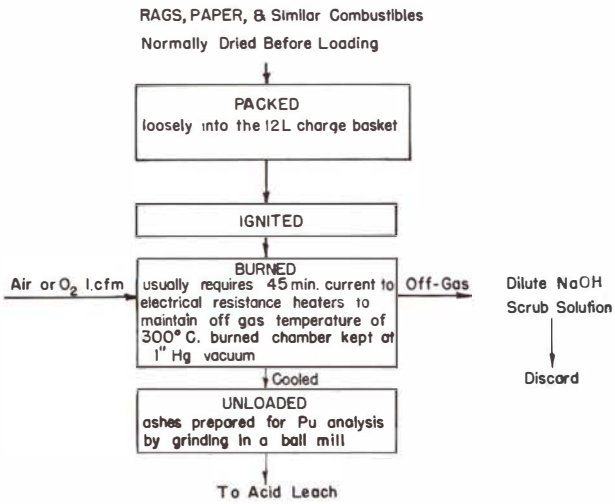


Fig. 42. Operation of contaminated residue incinerator.

glove box integrity. This problem has been alleviated by requiring that cotton rags be rinsed with $H_2O$ immediately after being in contact with $HNO_3$.

The ashes are collected after each run and reduced in a ball mill to particles that will pass through a 20-mesh screen. The ashes are sampled for plutonium, using the normal analytical quartering method. The samples are fused with $NaF\text{-}K_2S_2O_7$ and dissolved in $HNO_3\text{-}Al(NO_3)_3$. The plutonium content of the resulting solution is determined by routine radioassay methods. Such analyses have shown plutonium contents ranging from 0.2 to 57.0 wt %. The processing of these ashes and similar process solids is discussed in Section 6.3.

## 7.2 Ignition of Graphite

The incinerator (Fig. 41) has been modified to burn graphite residues [72, 73] by use of a smaller burn basket. The operating procedure consists of covering the bottom of the 6-in.-diam basket with charcoal to a depth of approximately ½ in. and then adding the graphite residues to within 1 in. of the top. The graphite residues are covered with a ½-in.-thick layer of charcoal, followed by a ½-in.-thick layer of cheesecloth. The material is then ignited, lowered into the burn position, and subjected to a stream of oxygen at a rate of 1.2 cfm. The electrical resistance heaters are used in whatever combinations are necessary to maintain a chamber temperature of 450°C.

With this basket and burn procedure, up to 560 g of graphite can be consumed in about 2 hr, leaving a burn residue of less than 10% of the original residue weight.[73] This weight can be reduced by igniting the residues at 600°C in a stream of oxygen in a muffle furnace.

The advent of $CaF_2$ coated graphite molds and crucibles made it possible to quantitatively remove the plutonium by leach methods, as reported in Section 6.6, and hence the incineration of graphite residues is performed only when several leach cycles have proved to be unsuccessful.

# Chapter 8. PROCESSING PLUTONIUM SOLUTIONS

## 8.1 Development of Procedures

Prior to July 30, 1945, the recovery of plutonium from solutions was accomplished by Process "A", consisting of oxalate and acetate precipitations and two ether extractions as shown in Fig. 1. After July 30, 1945, the acetate precipitation was omitted and the modified process, Process "B" (Fig. 3), was used until September 1945, when the ether extraction was discontinued. Thus, after September 1945 only an oxalate precipitation was used to purify plutonium prior to conversion to metal until 1947, when experimental work with ion-exchange resins, both anion and cation, and with solvent extraction led to the installation of packed columns for use with tri-n-butyl phosphate (TBP) and cation-exchange columns for separation and purification of plutonium.

The use of TBP in the packed columns and in mixer-setter columns and pump-mix trays for processing filtrate from the dissolution of slag and crucible and for processing miscellaneous solutions was continued until 1959.

Use of cation-exchange columns was abandoned in 1952 to avoid the undesirably large volumes that had to be created by diluting solutions of high salt content with $H_2O$ or 0.5*M* $HNO_3$ at a ratio of 10 volumes of diluent to each volume of solution in order to sorb the plutonium on the resin.

In 1958 and 1959, the investigation of the use of a nitrate anion-exchange column was resumed, based on data published by Ryan and Wheelwright of Hanford,[81] the method used by Pringle and Williams of Rocky Flats,[82] information published by Durham and Mills of Chalk River, Canada,[83] and information obtained at Los Alamos.[84, 85, 86, 87] The investigation showed that nitrate anion-exchange columns could be used at room temperature, if the flow rate was slightly reduced, to obtain adequate loading rates and decontamination factors.

On the basis of distribution data from trace loading experiments, impurity elements of interest may be divided into three groups.[33] The first group (magnesium, aluminum, iron, cobalt, copper, tantalum, americium, gallium, chromium, nickel, and manganese) exhibits no sorption on an anion-exchange column and hence quickly passes through the column, leaving purified plutonium on the resin. The second group (molybdenum, zirconium, mercury, bismuth, uranium, the rare earths, osmium, ruthenium, and rhodium) shows weak sorption and thus can be removed from the column without disturbing the plutonium by washing with 7*M* $HNO_3$. The volume of wash required for each of the impurities varies from 6 column volumes for zirconium to >20 column volumes for bismuth.

Elements in the third group (thorium, neptunium, platinum, palladium, and iridium) are strongly sorbed by the resin.[33] Of these, only thorium and neptunium follow the plutonium during the elution cycle, thereby giving good separation of plutonium from platinum, palladium, and iridium. These elements act as a poison to the resin; when appreciable quantities of these elements have been processed, the resin must be discarded because of decreased efficiency. The normal degradation of resin, however, is caused by alpha radiation and high concentrations of nitric acid.

Thus, only thorium and neptunium cannot be separated from plutonium by the ordinary nitrate anion-exchange method. At Los Alamos, the thorium is removed either by precipitation of $ThF_4$ from a $PuO_2^{2+}$ solution or by a chloride anion-exchange method in which the thorium passes through with the effluent. These methods are discussed in Section 8.4.4 and Section 8.7, respectively.

The neptunium may be removed by either a nitrate or a chloride anion-exchange system with special conditions. In one method, the neptunium and the plutonium are sorbed on the column and the plutonium is selectively eluted by using a strong reducing agent in a solution with a high enough nitrate concentration to keep the neptunium on the column. In the other method, the plutonium is kept from being sorbed on the column by reduction to the trivalent species prior to the loading step and thus the plutonium passes through the column with the effluent. The $Pu^{3+}$ species is easier to obtain and maintain in the HCl media and chloride anion-exchange is thus the preferred method for plutonium-neptunium separations.

Since the decontamination factors are sufficient for all elements except neptunium and thorium, the nitrate anion-exchange system, with a sufficient number of column washes, can be

used as a one-step purification process. Therefore, the use of solvent extraction columns and pump-mix trays was discontinued and the entire plant was converted to ion-exchange processes. The types of ion-exchange columns, type of resin, and separation made in each are:

1. Nitrate anion, Dowex-1X4 (50 to 100 mesh) for normal processing of all solutions that do not contain thorium.

2. Nitrate anion, Dowex-1X4 (100 to 200 mesh) for the separation of plutonium in process areas where the column is gravity fed.

3. Chloride anion, Dowex-1X4 (50 to 100 mesh) for the separation of plutonium from thorium.

4. Cation exchange, Dowex-50W, X-8 (50 to 100 mesh) for separation of plutonium and other cations from anions such as chloride, sulfate, citrate, tartrate, fluoride, and from water-soluble organics such as acetone and ethyl alcohol.

Duplicate columns for some of the above categories were set up so that solutions with a high plutonium concentration could be routinely sent to one column and solutions of low plutonium concentration to another and thereby maintain some degree of uniformity in feed treatment, acidity, and feed flow rate. With these ion-exchange systems, the impurities in the feed solution determine to which system the solutions are sent. The use of anion-exchange columns is discussed in Section 8.6.

## 8.2 Chloride Solutions

The use of the cation column for the removal of plutonium from solutions containing chloride proved to be very advantageous. Prior to the use of such a column, the chloride was removed by distillation of the HCl from $HNO_3$ solutions. The solution containing the chloride was transferred to a glass-lined dissolver. An equal volume of 15.6*M* $HNO_3$ was added and the volume was reduced to about half by distillation. More 15.6*M* $HNO_3$ was added and the distillation was repeated. After three or four such distillations, the chloride content of the evaporator bottoms was usually less than that which could be detected by the silver chloride method. This distillation method required the use of glass- or plastic-lined equipment.

Even with lined equipment, the downtime for maintenance was high and the slurry that was left after the last distillation contained a large amount of solids. These solids had to be removed by filtration before processing of the solution could continue and the solids had to be leached with $HNO_3$-HF before they could be discarded. This process was very time-consuming and the solids often proved to be very difficult to dissolve.

Experimental work had shown that the cation-exchange system could be used to obtain chloride free solutions. This system was installed in 1957 and used until 1960, when experiments were made to determine the amount of chloride that could be tolerated in various nitric acid concentrations in stainless steel equipment. Since chloride, at low concentrations, does not complex plutonium, the amount that could be tolerated would be determined by the rate of chloride corrosion of stainless steel. Experiments with Type 316, 304, and 347 stainless steel showed that when the $HNO_3$ concentration was $>3M$, 1*M* chloride could be present at room temperature without causing corrosion of the stainless steel equipment. At the end of 12 months' immersion, the weight loss was only 0.4 mg from a 4 g coupon of stainless steel. Since this amount of chloride could be tolerated at room temperature, the solutions containing chloride could be diluted with 7*M* $HNO_3$ until the chloride was $\leq 1M$ and then be handled as if they were $HNO_3$ solutions. These solutions could then be processed in the nitrate anion-exchange systems that had stainless steel components because evaporation is not used at any point in the processing of dilute plutonium solutions. The only evaporation used is in the dissolution of $PuO_2$ and plutonium metal.

## 8.3 Stabilizing Plutonium Valence

As is now well known, plutonium, in aqueous solutions, can exist in four valence states, either in a single state or in nearly any combination of all four valences. The potential required to change from one valence state to another is small enough so that a particular valence can be obtained by proper selection of type and sequence of addition of various oxidizing and reducing agents. It is this property of plutonium that has permitted or greatly eased the task of separating plutonium from all other cations.

Many oxidizing and reducing agents have been used during the years of investigation of plutonium chemistry at Los Alamos. From this work has evolved the preference for ferrous ammonium sulfate, $HNO_3$, hydroxylamine, sulfite, nitrite, permanganate, and dichromate as the standard reagents, reserving HI, bromate, hydra-

zine, and others for the special occasions when either a more powerful agent is needed or when the end products can be tolerated by the process and the equipment.

At Los Alamos, certain procedures have been established as the routine methods of converting plutonium to a desired valence.

For a nitric acid medium, trivalent plutonium is obtained by reducing the $H^+$ concentration to $<3M$ and then adding, at room temperature, 1.5 moles of $NH_2OH{\cdot}HNO_3$ per mole of plutonium. The $HNO_3$ concentration must be less than $3M$ to prevent the violent $HNO_3$-$NH_2OH$ reaction. The reduction to trivalent plutonium is usually complete in 1 hr. For large volumes of solution, the addition of hydroxylamine is often preceded by addition of urea to remove any nitrite that would consume some of the reducing agent before it could react with plutonium. If the solution contains complexing agents such as oxalate, sulfate, citrate, and tartrate, it may be necessary to increase the digestion time as well as add a stronger reducing agent such as ferrous ammonium sulfate to quantitatively reduce the plutonium.

Trivalent plutonium has been obtained on a semiproduction basis by electrolytic reduction,[3] but this method was abandoned when chemical reagents proved to be satisfactory.

The oxidation of trivalent plutonium by $HNO_3$ can be delayed by the addition of a small amount of sulfamic acid, a procedure often used to prevent gas evolution during the elution of trivalent plutonium from a cation-exchange column with $6M$ $HNO_3$. The length of time for which the trivalent plutonium is stabilized by the sulfamic acid is, of course, dependent on the rate of formation of $NO_2$ by light, heat, and radiation. If trivalent plutonium is desired in $>3M$ $HNO_3$, reducing agents such as hydrazine or semicarbazone must be used. In a HCl medium, trivalent plutonium may be obtained with hydroxylamine at much higher acidities than in an $HNO_3$ medium.

The preferred procedure for obtaining tetravalent plutonium involves reducing all the plutonium to the trivalent state with $NH_2OH{\cdot}HNO_3$ and the subsequent oxidation to the tetravalent state with $NaNO_2$. The standard procedure for obtaining tetravalent plutonium solutions for solvent extraction or ion exchange is shown in Fig. 43. The quantitative reduction to trivalent plutonium is required to assure that $PuO_2^{2+}$ will not be present in the final solution.

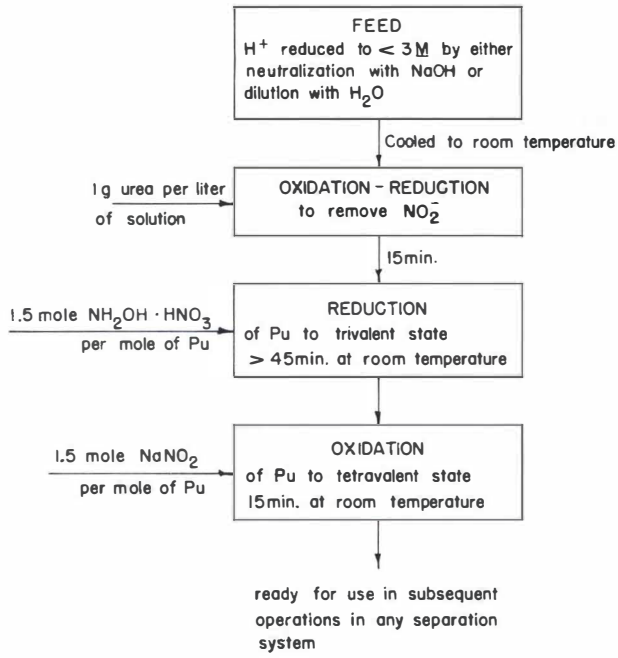


Fig. 43. Stabilization of tetravalent plutonium.

As early as 1944, $PuO_2^{2+}$ was being obtained by oxidation with $NaBrO_3$ by heating to 85°C for 4 hr, or by heating with $Na_2Cr_2O_7$ to 85°C for 10 hr.[3] The $Na_2Cr_2O_7$ method proved to be troublesome during later acetate precipitations and was abandoned in favor of the bromate method.[3, 1]

For certain recovery separations, $PuO_2^{2+}$ is now obtained by adding 50% excess $Na_2Cr_2O_4$ and heating at 90°C for 2 hr. The excess chromate serves not only to assure complete oxidation of the plutonium but also to provide a holding oxidant during subsequent precipitations or extractions.

## 8.4 Precipitation Methods

Many plutonium-bearing solutions contain only those cations which can be removed by a precipitation method. This section discusses the precipitation methods that have been used, the types of solutions sent to these precipitation processes, and the effectiveness of each process.

### 8.4.1 Precipitation of Plutonium Oxalate

The separation of plutonium and uranium was accomplished in 1944 by the precipitation of plutonium oxalate.[5] The procedure, whose flow sheet is shown in Fig. 44, involved oxidation of uranium to $UO_2^{2+}$ state, reduction of plutonium to the trivalent state with HI, and precipitation of

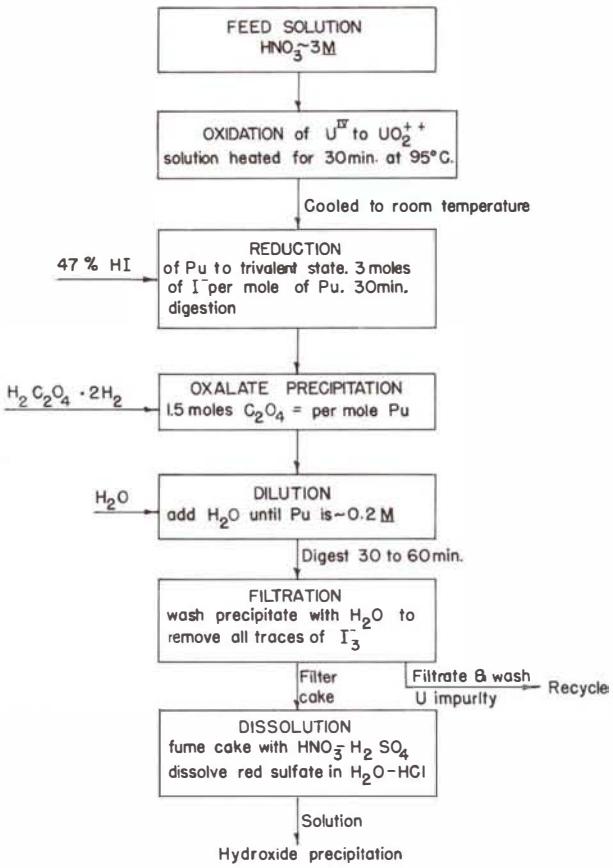


Fig. 44. Flow sheet for separation of plutonium and uranium by precipitation of plutonium oxalate.

the plutonium tri-oxalate by addition of $H_2C_2O_4 \cdot 2H_2O$. The dissolution of the oxalate cake was accomplished by fuming with $HNO_3$-$H_2SO_4$ until the oxalate was completely decomposed and the red sulfate was formed. This was readily dissolved in dilute HCl.

The precipitation of plutonium oxalate, either trivalent or tetravalent, is used with solutions that contain iron, aluminum, or other cations that do not form insoluble oxalates. The precipitation of the tetravalent oxalate results in better purification from iron, but requires careful addition of reagents to produce a filterable precipitate. When the oxalic acid is added too rapidly, the precipitate particles are very fine and the filtration requires much time. In addition, enough oxalic acid must be added to precipitate the maximum amount of plutonium but, if this amount of oxalic acid is appreciably exceeded, the plutonium begins to form soluble complexes with the oxalate anion and redissolves, thus increasing the filtrate losses.

The conditions for precipitation of trivalent plutonium are not nearly as critical as for precipitation of tetravalent plutonium oxalate in that the reagents may be added rapidly and a large excess of oxalic acid may be added without appreciably increasing the filtrate losses or the filtration time. The flow sheet for this process is shown in Fig. 45.

One disadvantage of this system, when used for a solution with a large amount of iron, is that if the mixture in the precipitation vessel is stirred for a long time during the plutonium valence reduction step, some of the iron is reduced to the ferrous state by the $NH_2OH \cdot HNO_3$ and may then precipitate because ferrous oxalate is not as soluble as ferric oxalate. The time required for iron reduction, however, is sufficient (>45 min) to allow a reasonable digestion time for the reduction of the plutonium and complete filtration and washing of the filter cake without exceeding the maximum permissible iron concentration of the product.

The precipitation of the trivalent oxalate is also used as the concentration step of the nitrate anion-exchange columns and was used as the concentration step in the solvent extraction work. The nitrate anion-exchange columns are eluted with 0.3*M* $NH_2OH \cdot HNO_3$ and therefore the plutonium in the eluate is already in the trivalent state. Thus, only oxalic acid need be added to precipitate the plutonium oxalate. The resulting oxalate is ignited to the oxide and the oxide is dissolved in $HNO_3$-HF to produce a plutonium nitrate product that is acceptable in the metal preparation line.

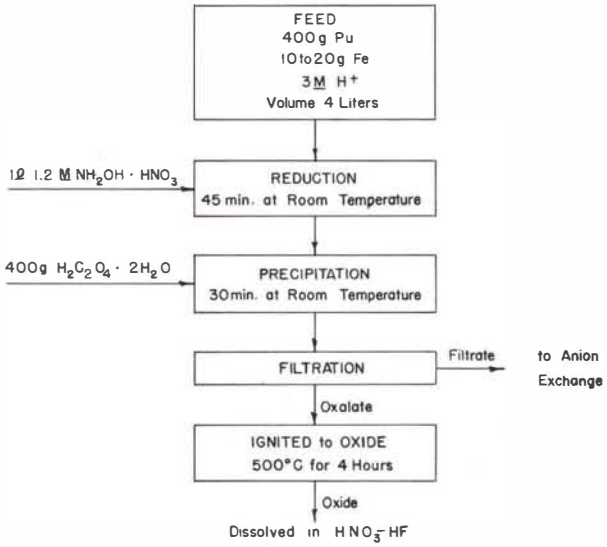


Fig. 45. Flow sheet for plutonium oxalate precipitation.

The filtrate from the precipitation of the trivalent oxalate has an average plutonium concentration of $5 \times 10^{-2}$ g/liter. This can be lowered somewhat by careful control of acidity and an extended digestion time, but even so the plutonium concentration of the filtrate cannot be reduced to the discard level of $1 \times 10^{-3}$ g/liter and must therefore be reprocessed. Thus, there is no purpose in striving to reach the discard level for each of these precipitations. Since we do not seek to reach the discard level, the precipitation can be finished quickly, thus keeping the iron content of the cake lower, and much time need not be spent in setting up or attaining special conditions.

The purity level of the cake depends, naturally, on what cations were present in the feed and at what concentration. For the cake obtained from the processing of eluate from the nitrate anion-exchange columns, the plutonium is fairly pure (<1000 ppm impurities, based on plutonium). If the cake was obtained from the precipitation of plutonium from other solutions, the cake will contain all of the insoluble oxalates and a certain amount of iron, depending on the length of digestion time. Normally, the products from the precipitation of batches containing 2.5% iron, based on plutonium, will contain <100 ppm iron, based on plutonium, if the digestion time is less than 45 min.

The tetravalent oxalate precipitation is usually used only when it is desired to make a gross separation of the major portion of the plutonium from uranium. Two disadvantages of this precipitation are the frequency of occurence of a precipitate that is hard to filter, and the need for careful control of the amount of oxalic acid added for the precipitation. The solubility of tetravalent plutonium oxalate goes through a minimum as the concentration of the oxalic acid is increased. This precipitation also gives high decontamination factors for iron and aluminum.

### 8.4.2 Calcium Oxalate Carrier Precipitations

Early in 1952, it was found that plutonium could be scavanged from many types of solution by the homogeneous precipitation of certain oxalates. One of the most promising procedures involved the use of calcium as the carrier. The laboratory and plant development work was described by Maraman and others in 1954.[88] The final procedure required the addition of $Ca(NO_3)_2$ to the solution to be processed, reduction of hydrogen ion concentration by dilution or neutralization to $\sim 1M$, cooling to room temperature, the addition of reducing agents such as $NH_2OH{\cdot}HNO_3$ to obtain trivalent plutonium, the addition of $H_2C_2O_4{\cdot}2H_2O$ to $\sim 0.1M$ uncomplexed $C_2O_4^{2-}$, and, finally, the addition of NaOH to $0.1M$ $H^+$. After the white $CaC_2O_4$ had been allowed to settle, the supernatant was decant-filtered and analyzed for plutonium content. If the desired uncomplexed $C_2O_4^{2-}$ concentration had been obtained, the plutonium concentration would always be below the discard level of $1 \times 10^{-4}$ g/liter, based on total $\alpha$ analysis, so that the solution could be discarded.

The solids and supernatant remaining in the precipitation tank were slurried to a 250-gal., glass-lined, steam-jacketed, Pfaudler kettle where the solids were to be dissolved in $HNO_3$. Plant operating experience soon showed that it was difficult to maintain the acid strength that would oxidize the oxalate. If all the oxalate was not destroyed in this step, then both plutonium and calcium oxalate would precipitate when the solution was diluted in the next step of the process. Destruction of the oxalate could be assured by the addition of strong oxidizing agents such as $KMnO_4$, but it was felt that the additional steps then required to get rid of the oxidizing agent and the resulting reduced components made the process unattractive, and it was therefore abandoned in 1954 in favor of solvent extraction or anion-exchange.

### 8.4.3 Precipitation of Plutonium Peroxide

A peroxide precipitation is used to separate plutonium from elements such as cerium, cobalt, lanthanum, and magnesium, and relatively small amounts of aluminum, iron, and bismuth. A summary of the separation data is given by Leary and others.[89, 90] In the Recovery Section at Los Alamos, plutonium solutions containing up to 2.5 wt % of iron are routinely processed in the batch equipment in this system. This amount of iron can be tolerated if the system is adequately cooled. The equipment used for precipitations on the 400 g plutonium scale is shown in Fig. 46.

The rate of addition of the $H_2O_2$ is dependent upon the type and amount of impurity present. The procedure for the routine precipitation of plutonium peroxide is given in Fig. 47. The filter cake is washed with 5% $H_2O_2$-$0.5M$ $HNO_3$ to remove the last traces of the impurity. The acid is added to the wash solution to prevent the cake from breaking into smaller particles which then drastically slow the rate of filtration. After the cake has been washed with five 150- to 300-ml portions of the wash solution, the cake is air dried for

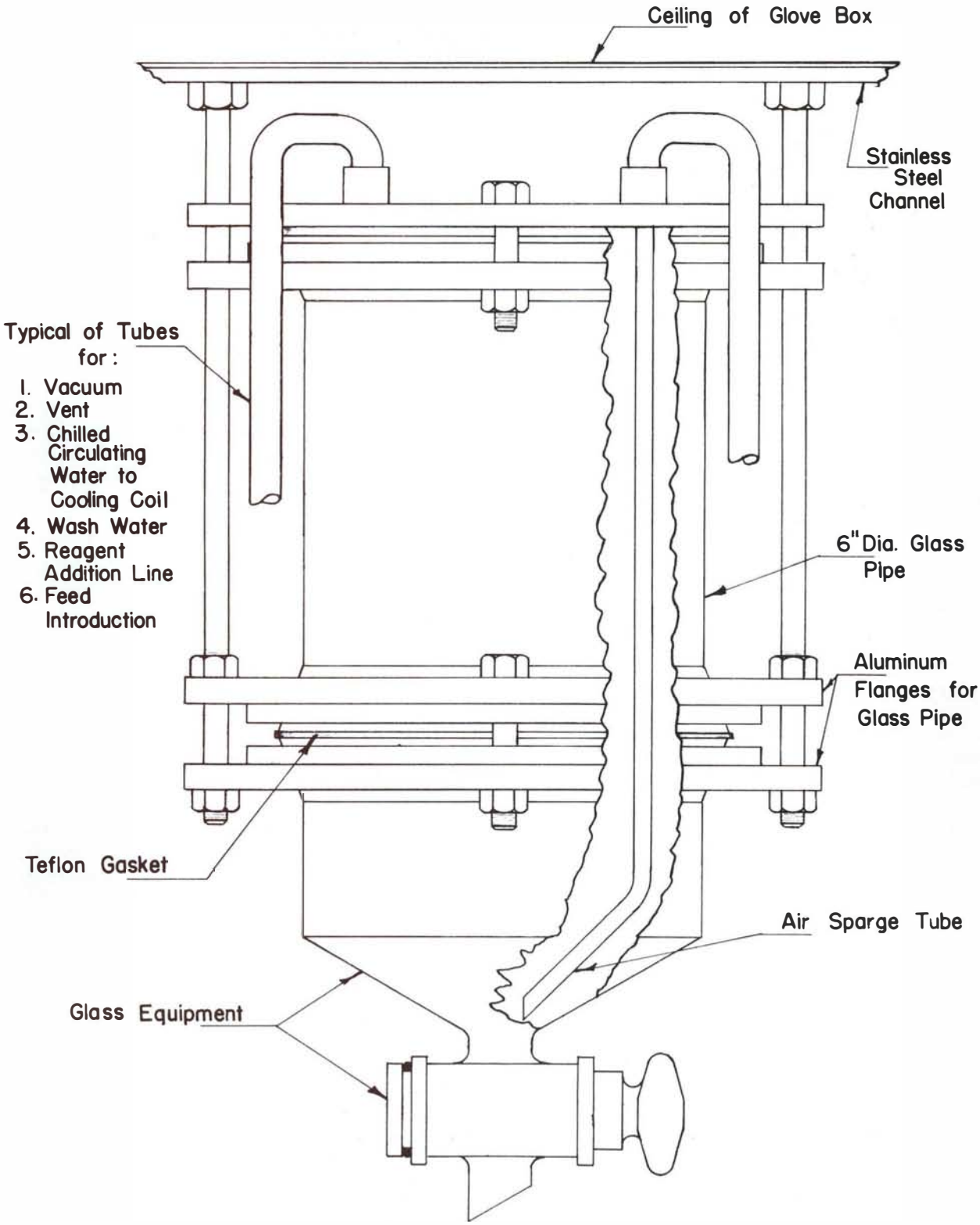


Fig. 46. Equipment for batch precipitation of plutonium peroxide.

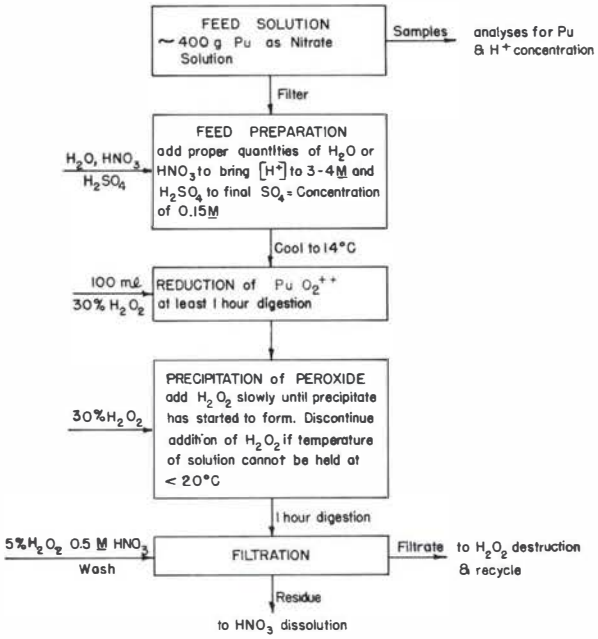


Fig. 47. Procedure for precipitation of plutonium peroxide.

a few minutes. The cake is then slowly added to 500 ml of 15.6*M* $HNO_3$. The initial portion of the peroxide cake dissolves rather slowly and the initial plutonium in solution is mainly in the trivalent state. After about one-third of the cake has been added and the temperature has increased, the plutonium is rapidly oxidized to the tetravalent state by the nitrite and high nitric acid concentration. As soon as this point has been reached, signified by the sudden release of large amounts of $NO_2$ fumes, the remainder of the cake can be added rapidly to the acid mixture. After all the peroxide cake has been dissolved, the solution is cooled to room temperature and filtered. This solution is then transferred to the metal preparation line for conversion to metal.

The excess $H_2O_2$ in the filtrate must be destroyed immediately after filtration and especially before transferring the solution to one of the ion-exchange systems for recovery of plutonium. Of the many methods available for this destruction, two were selected for use in this plant. The preferred method is to slowly add the filtrate to a volume of 9*M* NaOH. For a filtrate obtained from the precipitation of a 370-g batch of plutonium, 2 liters of 9*M* NaOH are sufficient. After all the $H_2O_2$ has been destroyed and the solution cooled to room temperature, the mixture is acidified with $HNO_3$ to completely dissolve the hydroxides and provide a clear solution as feed for an ion-exchange or solvent-extraction column. This method is used for all filtrates except those that contain cobalt. When filtrates containing cobalt are added to caustic, the $H_2O_2$ is readily destroyed, but the cobalt precipitates as cobaltic oxide. This precipitate is insoluble in $HNO_3$ and hence must be removed by filtration before putting the solution on an ion-exchange column. Cobaltic oxide is soluble in $H_2SO_4$ but such a medium is undesirable as far as an ion-exchange system for the recovery of plutonium is concerned.

Therefore, for peroxide filtrates containing cobalt, the filtrate is added to 2 liters of 15.6*M* $HNO_3$, containing 0.5 mole of ferric nitrate, where the high $HNO_3$ and the $Fe^{2+}$ — $Fe^{3+}$ couple destroy the peroxide. Plant experiments have shown that the destruction is complete and that no explosion would be likely even if the entire volume of filtrate were dumped into the acid-iron mixture if the reaction is performed in an open vessel. The reaction is violent and the large volume of gas generated must be released as it forms. Because so much gas is formed during peroxide destruction, the reaction is carried out in open vessels, allowing ample freeboard to accommodate the foam caused by the generation of this large volume of gas.

After the destruction of the $H_2O_2$ by caustic, the solution is brought to 7*M* $H^+$ with concentrated $HNO_3$. This solution is then filtered and transferred to an anion-exchange system for further processing. The plutonium is not stabilized with the usual $NH_2OH$-$NaNO_2$ treatment because experiments and plant experience have shown that, normally, the plutonium concentration in these solutions can be reduced to the discard level without this treatment.

The solutions from the destruction of the $H_2O_2$ in $HNO_3$ are essentially ready for the nitrate anion-exchange columns. The acidity is checked by titration with 0.1*M* NaOH using KF to complex any caustic-consuming cation present. These solutions are also filtered and sampled before transferring to the ion-exchange system.

## 8.4.4 Precipitation of Plutonium Fluoride

$PuF_3$, $PuF_4$, and $K_2PuF_6$ precipitations were used only briefly in the recovery process at Los Alamos. Other methods were favored because fluoride precipitation usually gave very low or small decontamination factors, and often a precipitate that was difficult to filter or that required special handling to be of use in successive steps.

The tetrafluoride precipitation method was

used in 1944 to separate plutonium and uranium.[5] After oxidizing all the uranium to $UO_2^{2+}$ by heating the nitrate solution, 6 moles of HF per mole of plutonium were added so that the gray potassium plutonium fluoride was precipitated, following the procedure shown in Fig. 48. This procedure was never used on a production scale, even though the decontamination achieved was satisfactory.

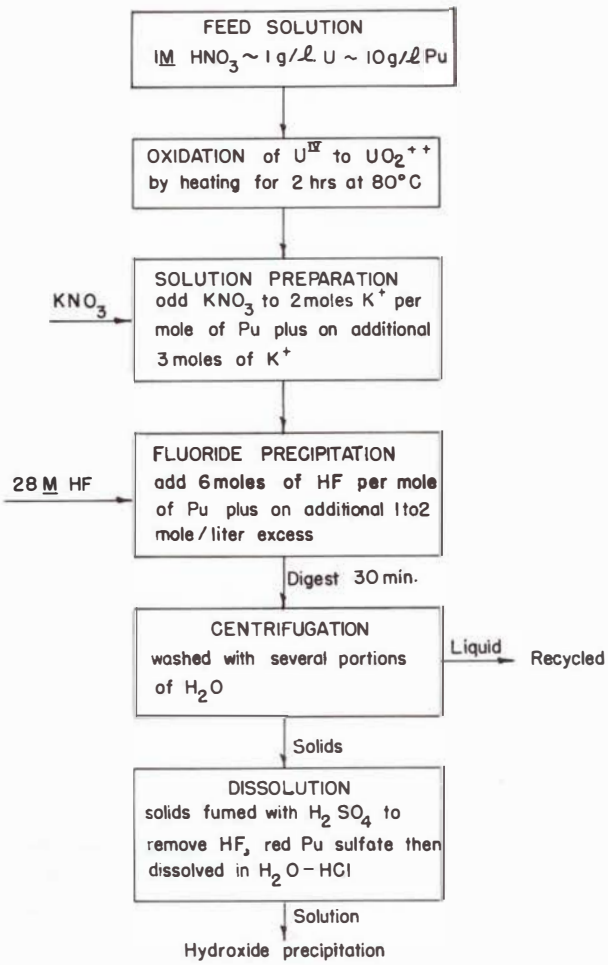


Fig. 48. Separation of plutonium and uranium by precipitation of potassium plutonium tetrafluoride.

A variation of this procedure was used in 1944 to separate plutonium and cerium.[5] In this procedure the plutonium was oxidized to $PuO_2^{2+}$ with $NaBrO_3$ in an $HNO_3$ solution and the cerium was precipitated as the fluoride by adding excess HF.

The fluoride precipitation has been used extensively in the separation of plutonium and thorium. In this procedure the plutonium is oxidized in $PuO_2^{2+}$ and held there with $Na_2CrO_4$. Then either KF or HF is added to precipitate $ThF_4$. The precipitation conditions are given in the flow sheet shown in Fig. 49. The precipitate obtained is difficult to filter, but its volume is so small that a poor filtration rate can be tolerated as long as the product is pure. The thorium content of the filtrate is low, but it can be reduced even further by the addition of $La(NO_3)_3$ which acts as a carrier for $ThF_4$ when it precipitates as $LaF_3$.[5, 91] Analytical data show that the product generally contains less than 50 ppm of thorium. $H_2O_2$ can then be added slowly to the filtrate to reduce the chromate to chromous and the $PuO_2^{2+}$ to $Pu^{4+}$. After the reduction is complete and the solution made $0.15M$ $SO_4^{2-}$, continued addition of $H_2O_2$ results in the precipitation of plutonium peroxide. After washing with 5% $H_2O_2$-$0.5M$ $HNO_3$, this compound is dissolved in $HNO_3$ to provide a nitrate feed for the metal preparation line.

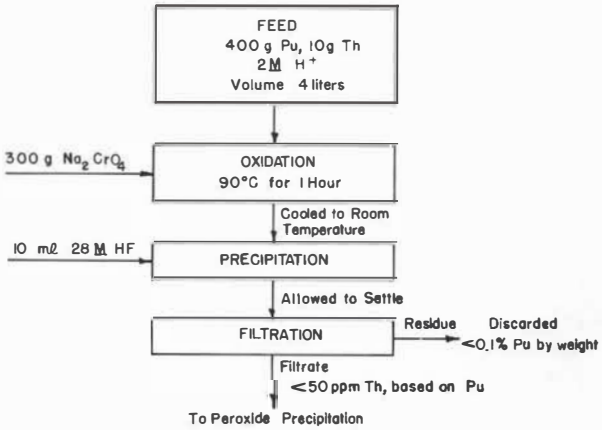


Fig. 49. Flow sheet for separation of plutonium and thorium by fluoride precipitation.

In 1962, it was found that a good separation of plutonium and thorium could be obtained by converting the solution from a nitrate medium to a chloride medium and the solution passed through a chloride anion-exchange column.[92] If the HCl content was $\sim 7M$ and the nitrate content was $<3M$, then the plutonium would be sorbed on the column while the thorium passed on through with the effluent. The effluent generally contained less than 1 mg Pu/liter. At this level the solutions could be discarded. Because the solutions were $7M$ HCl, they could not be handled or transferred to waste disposal facilities in stainless steel equipment. Laboratory tests showed that if the solution was made $>3M$ $HNO_3$ and $0.5M$ $Al(NO_3)_3$, chloride concentrations of up to $2M$ could be stored or transferred in stainless steel equipment without corrosion. A safety factor was provided by limiting the chloride concentration in plant solutions to a maximum of $1M$. The handling of

chloride solutions in this manner was acceptable as long as the solutions were not heated. Solutions of this nature have been processed and transferred in stainless steel (Type 304, 316, or 347) for three years without causing any more corrosion than nitric acid solutions alone would have caused. This method of handling chloride solutions is discussed further in Section 8.2.

The chloride effluents could be processed in normal plant equipment with no detectable corrosion, but the equipment for the *7M* HCl sorption of plutonium exhibited severe corrosion. This corrosion also extended to the walls of the drybox even though the walls had been coated with a thermosetting plastic. Wherever bonding of plastic to stainless remained intact, corrosion was prevented. In areas where the plastic layer was subjected to severe mechanical abrasion or flexing, the plastic was generally so brittle that it would crack, thus allowing HCl vapors to contact metal. As corrosion progressed, more plastic would be loosened adjacent to the crack and corrosion would spread.

Therefore, since an acceptable separation of plutonium and thorium can be obtained with the fluoride precipitation method and since corrosion problems are much less severe, it was decided to abandon the chloride anion-exchange method in favor of the fluoride precipitation of thorium. This method is now used with a dilute HF wash of the $ThF_4$ precipitate, which results in leaving less plutonium with the residue.[93] Products containing $<50$ ppm of thorium are routinely obtained in the present equipment.

### 8.4.5 Precipitation of Plutonium Hydroxide

The low solubility of plutonium hydroxide suggested that this precipitation might be useful in the recovery of plutonium. Small-scale experiments in 1944 showed that the plutonium concentration of the supernatant would be low ($<1 \times 10^{-3}$ g/liter), even if strong complexing agents such as citrate were present. Further work showed that the plutonium concentration could be reduced further if cations, such as iron or aluminum, were present to act as carriers.[5, 7] With such a method supernatants containing $<1 \times 10^{-5}$ g/liter of plutonium were routinely obtained. This method has several disadvantages, however, that prevent it from being used as a routine recovery process. Among the disadvantages are poor filtration rate, poor purification factors, and sometimes incomplete dissolution of precipitate by acidification alone.

Plutonium hydroxide is a gelatinous precipitate having many of the filtration characteristics of aluminum or ferric hydroxide. The filtration rate can be increased by the use of a diatomaceous earth filter, but the volume of insoluble residue which must be subsequently processed is then increased. The diatomaceous earth can readily be disposed of by formation and volatilization of $SiF_4$ (see Section 6.4), but such a second step should be avoided if a more suitable one-step method can be found for the recovery of plutonium.

Such a one-step method was the nitrate anion-exchange columns discussed in Section 8.6. With ion-exchange, not only could satisfactory plutonium recovery be made, but satisfactory purification could also be obtained from all elements except neptunium and thorium in a one-step process.

The hydroxide precipitation method can be used to remove certain impurities by selection of either NaOH or $NH_4OH$ as the precipitating agent. With NaOH, amphoteric or acid elements such as aluminum or chromium could be redissolved by increasing the pH to $>8$. If the hydroxide cake was dissolved in $HNO_3$ and the hydroxides precipitated with excess $NH_4OH$, elements such as silver, copper, and zinc would form ammoniacal complexes and remain with the supernatant. If alkaline earths were present, the addition of $NH_4OH$ could be stopped at pH 5-6, thus preventing formation of alkaline earth hydroxides and the alkaline earths could be removed with the supernatant by filtering before adding excess $NH_4OH$.

Even though early procedures for the purification of plutonium, such as those listed by Pittman in 1947,[7, 9] employed successive hydroxide precipitations, the recovery operations at Los Alamos now use ferric hydroxide carrier precipitations only for those solutions from which plutonium cannot be sorbed on a nitrate anion-exchange column. A variation of this method is employed in the processing of the chloride melt from the electrorefining process and is discussed in Section 4.10. The procedure for the ferric hydroxide carrier precipitation process shown in Fig. 50 is discussed in the next section.

### 8.4.6 Ferric Hydroxide Carrier Precipitations

By 1952, many solutions had been received or created that contained large amounts of complexing ions such as citrates and phosphates from which recovery of the plutonium proved to be

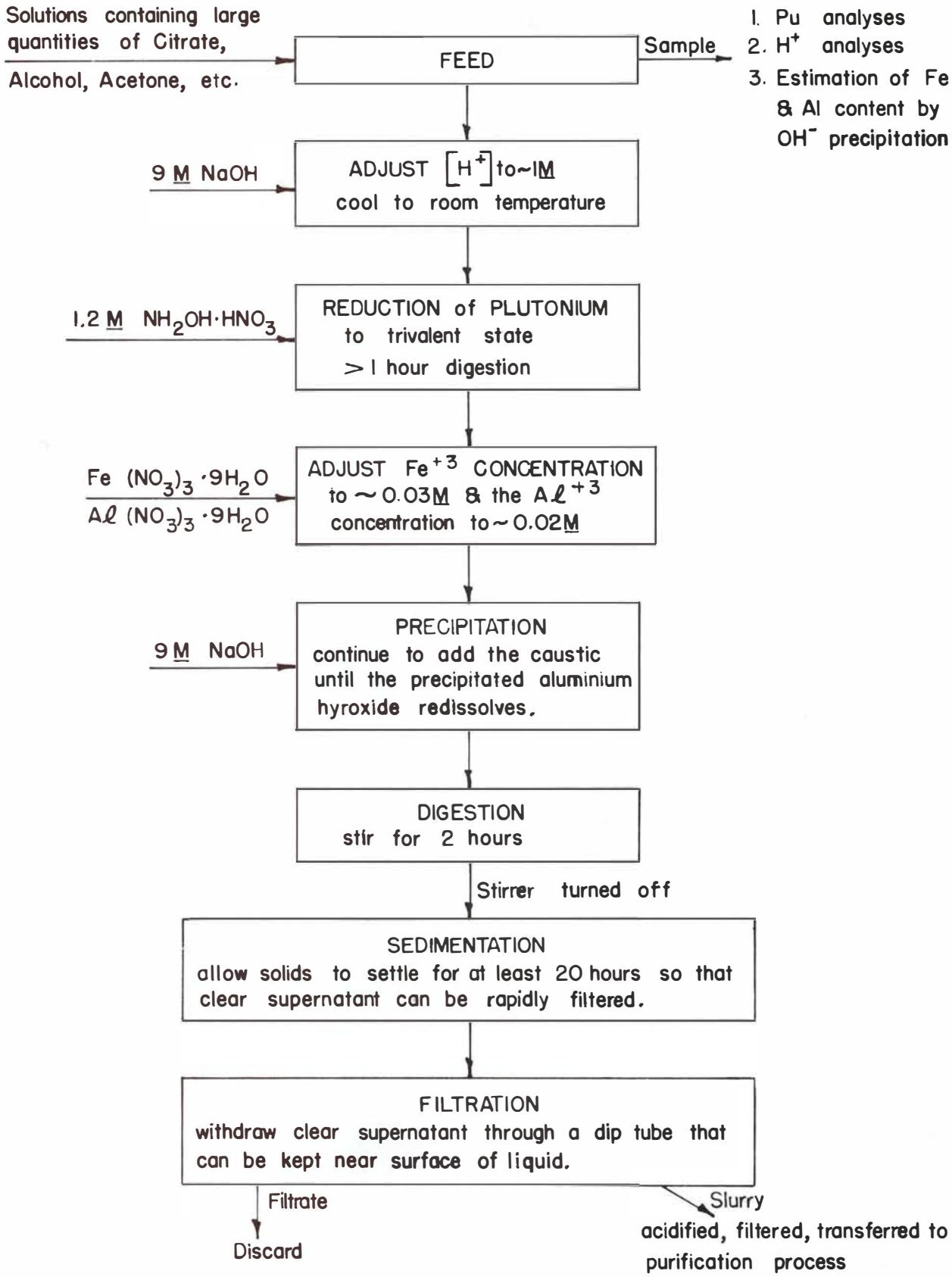


Fig. 50. Flow sheet for scavenging of plutonium by ferric hydroxide carrier precipitation.

difficult by ordinary solvent extraction methods. Although the addition of a large amount of a salting agent such as $Al(NO_3)_3$ would aid the extraction of plutonium by tri-n-butyl phosphate, a large number of batch equilibrations or passes through a packed column were still necessary to reduce the plutonium content to the then existing discard level of $1 \times 10^{-4}$ g/liter. Such processing consumed so much time, often days, to complete as many as 20 batch equilibrations on the 150-gal. scale that a scavenging method was sought to decrease man-hours required. Calcium oxalate carrier precipitations were rejected because of the difficulty in destroying the oxalate ion during the precipitate dissolution step.

A process that seemed to offer the advantage of easy dissolution of the precipitate while still removing nearly all the plutonium was hydroxide precipitation. Experimental work showed that the solubility of plutonium hydroxide in these phosphate and citrate solutions was higher than desired. Therefore, a carrier would be needed as a scavenger, such as the addition and precipitation of $Al(OH)_3$ used in 1945.[7] To be effective, however, the addition of NaOH must be carefully controlled so that the hydroxide concentration does not reach that point where the amphoteric $Al(OH)_3$ begins to redissolve.

Further experimental work showed that the precipitation of $Fe(OH)_3$ would scavenge plutonium efficiently while still yielding a precipitate that could usually be dissolved by acidification alone.

The flow sheet for the procedure used on a plant scale is shown in Fig. 50. After the reduction of plutonium to the trivalent state by $NH_2OH \cdot HNO_3$, the required amounts of $Fe^{3+}$ and $Al^{3+}$ are added as the nitrate salts. The iron is added to serve as the carrier when precipitated as the hydroxide and the aluminum is added to serve as a visual indicator of when sufficient NaOH has been added. To be sure, this indicator allows one to add far more caustic than is needed to precipitate the iron, but such an excess is trivial in comparison to the total amount of NaOH needed and the ease with which operators can recognize the end point without expending effort in taking and analyzing samples throughout the process or trying to maintain in-line instruments. By adding NaOH until the amphoteric $Al(OH)_3$ has just redissolved, a pH of $\sim 10$ is routinely reached and the plutonium is consistently reduced to $< 1 \times 10^{-5}$ g/liter in the supernatant.

This process is used only when solutions are received that are not compatible with solvent-extraction or ion-exchange methods because of the presence of complexing agents such as citrate or tartrate, or the presence of organics such as acetone or ethanol that will react with high nitrate systems. The dissolved hydroxide filter cake serves as acceptable feed for either solvent-extraction or ion-exchange systems.

### 8.4.7 Miscellaneous Precipitation Processes

Many precipitations were investigated on a laboratory scale but were never instituted on a plant scale because other methods were available that would allow recovery of the same quantity of plutonium with a much higher degree of purification. Examples of such methods are the precipitation of sodium plutonyl acetate,[3, 1] ferric plutonyl acetate,[94] sulfate, double salts of the nitrate series, iodates,[5] $Al(OH)_3$ carrier precipitations,[7] and p-bromo mandelic acid for plutonium-zirconium separation.[39]

## 8.5 Cation-Exchange Processes

In 1945, Duffy and others suggested[10] that a cation-exchange column could be used to remove plutonium from the supernatants from peroxide and oxalate precipitations. Research continued by Mullins and others[85, 95, 96] led to the installation of 16-in.-diam columns using Dowex-50 cation resin for the recovery of plutonium from slag and crucible dissolver solutions and from solvent extraction raffinates.[97] The procedure for this operation is given in Fig. 51. Data collected from further experimental work as well as from the 16-in. production columns showed that the dissolver solutions and raffinates would have to be diluted to $\leq 1$ cation equivalent per liter before plutonium sorption would occur to the degree desired. Since the dissolver solutions and raffinates contained large amounts of magnesium, calcium, and aluminum nitrates (sp gr of 1.4 g/ml), the dilution would have to be done with more than 10 volumes of water per volume of solution. Such large volumes led to equipment problems and eventually to the selection of a batch solvent extraction method for the scavenging of the plutonium from column raffinates (see Section 8.9.3).

A small (3-in. diam by 24-in. long) cation-exchange column was installed in 1960 for processing HCl solutions.[98] Since the column was on a small scale, it was relatively easy to use glass and plastic for those parts which would be wetted by the solution. A line drawing of the column is shown in Fig. 52.

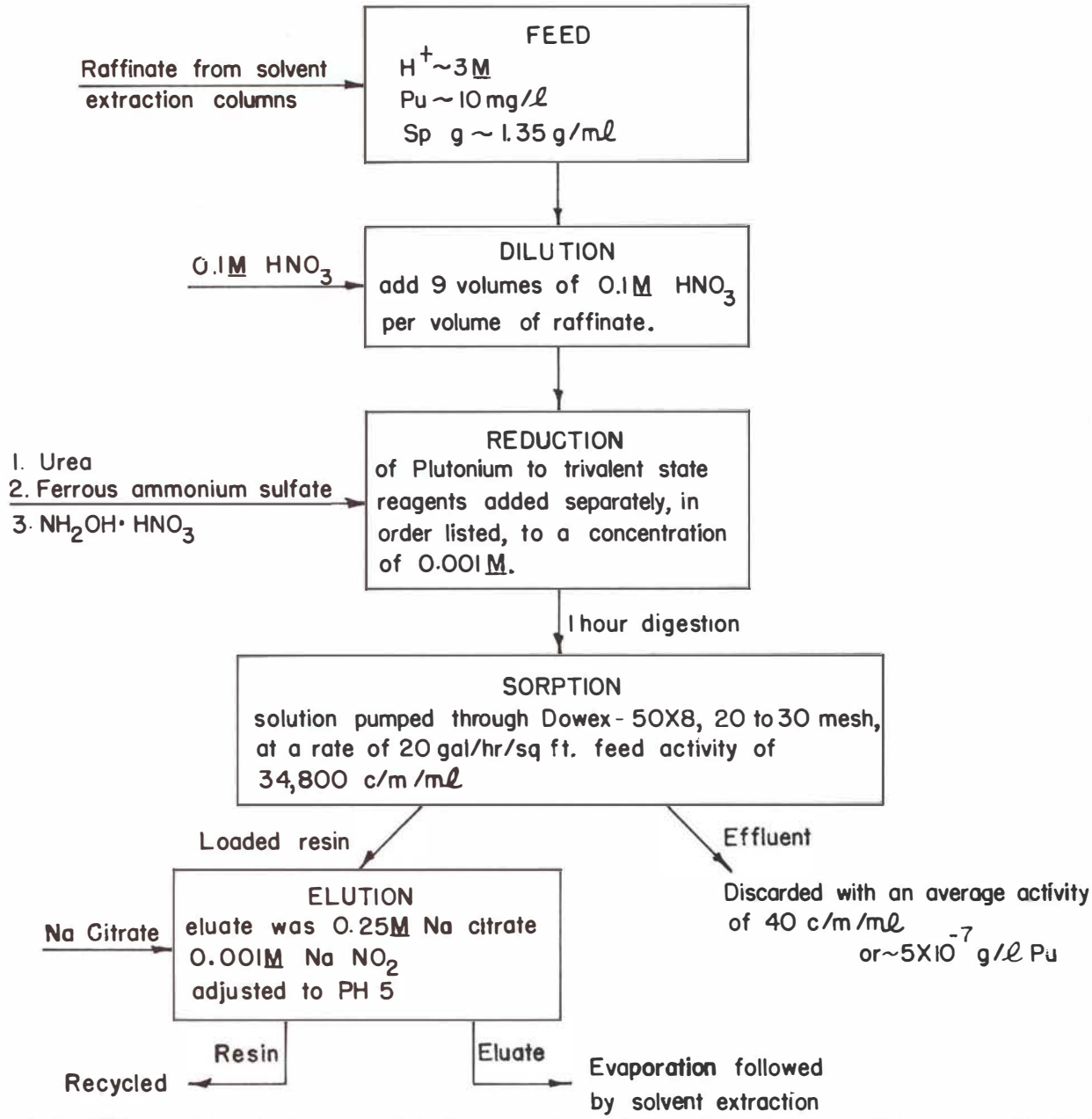


Fig. 51. Flow sheet for absorption of plutonium on cation-exchange resin from slag and crucible dissolver solutions.

The procedure for handling the HCl solutions consisted of dilution with $H_2O$ to $<1$ cation equivalent per liter, addition of $NH_2OH{\cdot}HNO_3$ to obtain trivalent plutonium, and sorption on the Dowex-50W X8. 50 to 100 mesh resin.

The plutonium concentration in the effluents was consistently $<0.05$ mg/liter, even with flow rates as high as 5 ml/min/cm$^2$. These solutions were discarded, thus removing the chloride from the plant stream. Plutonium that had been sorbed on the resin was eluted with $6M$ $HNO_3$-$0.3M$ $HSO_3NH_2$ (sulfamic acid), thereby changing from a chloride to a nitrate medium. A flow sheet for this process is shown in Fig. 53. Very little purification of the plutonium was expected or attained with this process and, hence, the eluate was transferred to a nitrate anion-exchange column for removal of impurities.

When laboratory experiments showed that up to $1M$ chloride could be tolerated in $7M$ $HNO_3$ solutions without corroding stainless steel equipment (see Section 8.1). this process was aban-

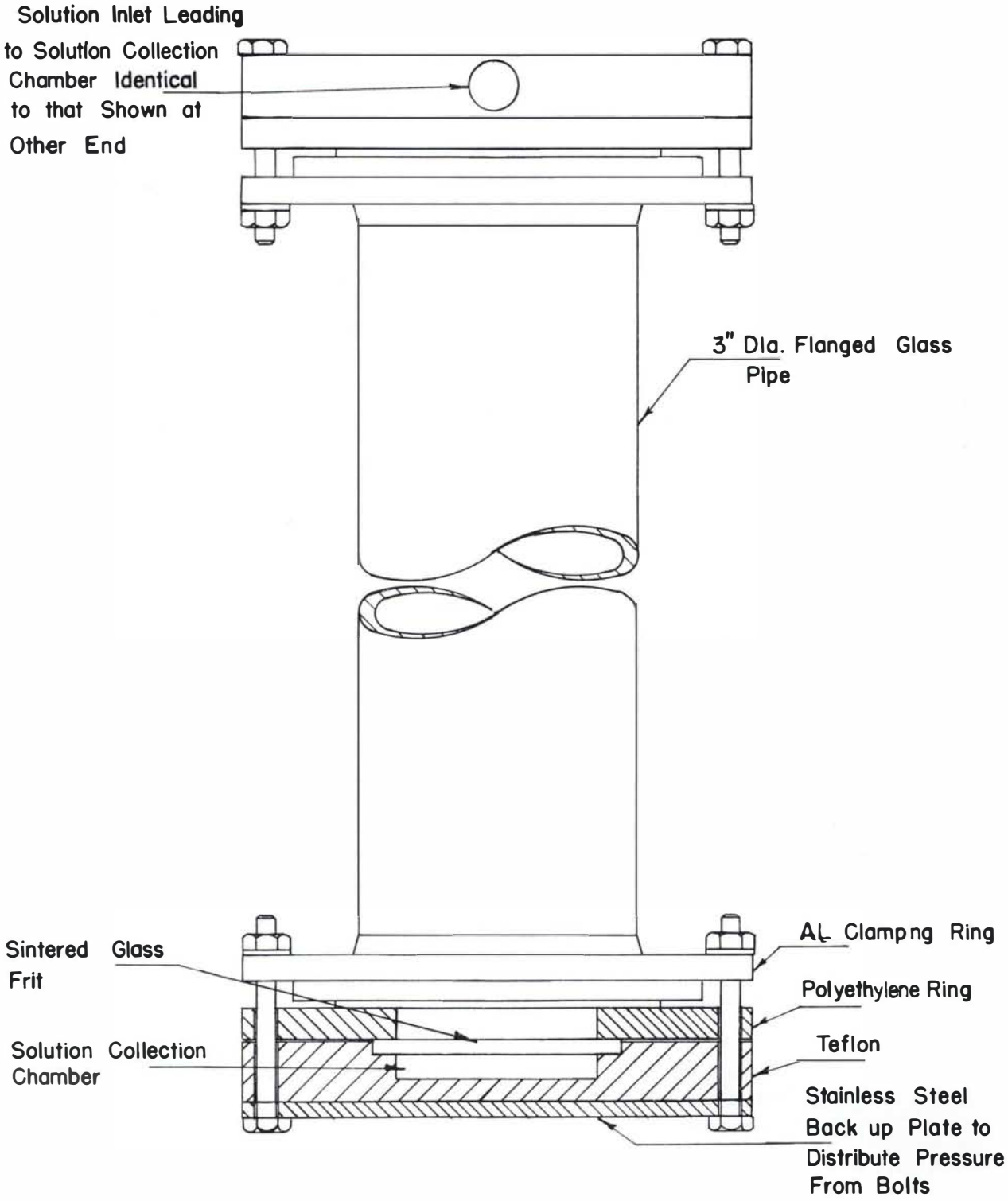


Fig. 52. Ion-exchange column for HCl media.

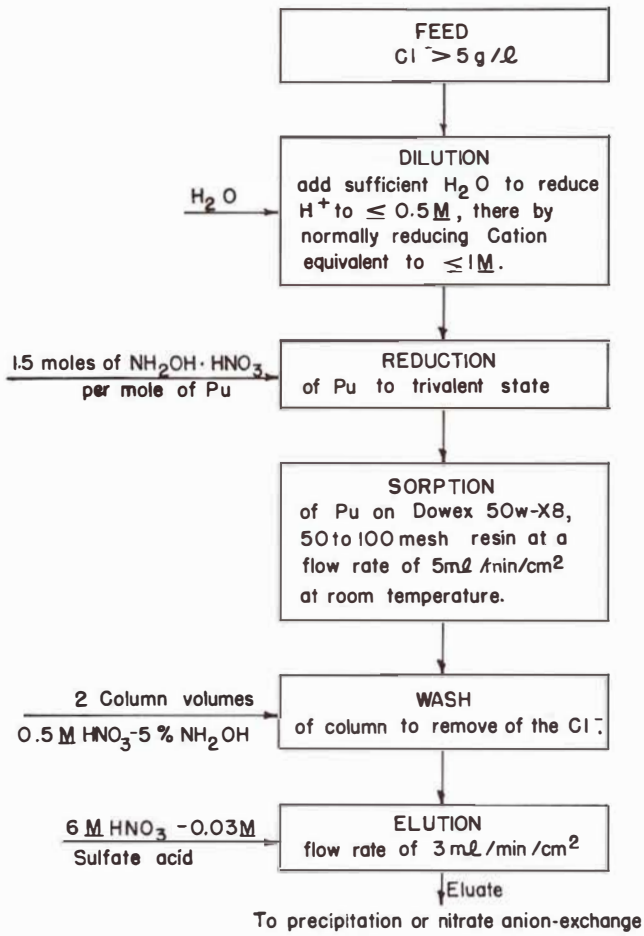


Fig. 53. Flow sheet for cation-exchange column used for chloride removal.

doned and all HCl solutions were merely diluted with $7M$ $HNO_3$ until the chloride was $\leq 1M$. These solutions were then processed routinely in any of the several nitrate anion-exchange columns.

Laboratory experiments to investigate the separation of plutonium and uranium by use of a cation-exchange resin were started, but, even though the work showed promise, it was discontinued when washing experiments with a nitrate anion-exchange column showed that uranium could be removed by increasing the volume of $7M$ $HNO_3$ wash to 30 column volumes (see Section 8.6).

## 8.6 Anion-Exchange Processes

After 1959, the recovery operation at Los Alamos employed nitrate anion-exchange columns as the primary mode of scavenging, purifying, and concentrating plutonium. The general procedure for any residue then became: get the plutonium into solution, sorb the plutonium on nitrate anion-exchange resin, wash with enough $7M$ $HNO_3$ to remove impurities, elute the plutonium, and then determine which, if any, additional process should be used to remove remaining impurities. For example, if the eluate contained >100 ppm of thorium, based on plutonium, the solution would be transferred to either the $ThF_4$ precipitation process or the chloride anion-exchange system. If the eluate merely needed to be concentrated, the next step would be precipitation of the trivalent plutonium oxalate, as described in Section 8.4.1. Experimental work on this system has been reported in a series of papers by James and Cooper.[34, 99-104] The analytical aspects of this system were reported by Kressin and Waterbury.[35] The processing of plutonium metallurgical scrap by anion-exchange was reported by James and Christensen at the 1964 meeting of the Nuclear Fuel Processing Committee of AIME.[33]

The basic steps of the standard procedure used at Los Alamos are to stabilize the plutonium in the tetravalent state, bring the feed solution to the desired $HNO_3$ concentration, sorb the plutonium on Dowex 1X4, 50 to 100 mesh resin, wash with the proper volume of $7M$ $HNO_3$, and elute the purified plutonium with $0.3M$ $NH_2OH{\cdot}HNO_3$. The details of the procedure are shown in the flow sheet in Fig. 54. A schematic of the columns and column heads is shown in Fig. 55. After the downward-flow loading and washing steps, the acidity is reduced by an upward flow of 10 liters of $1M$ nitric acid in preparation for elution of the plutonium by 10 liters of $0.3M$ $NH_2OH{\cdot}HNO_3$. If any plutonium remains on the columns at this point, the elution is completed using $0.3M$ $NH_2OH{\cdot}HNO_3$-$0.5M$ $HNO_3$. The acid is added to the second eluate to prevent polymer formation, but is not needed in the first eluate since enough $HNO_3$ will also be eluted to keep the acidity at $>0.5M$. Although a low $HNO_3$ concentration is sufficient to destroy the sorbable tetravalent plutonium complex, it is our experience that the desorption times for dilute $HNO_3$ alone are unfavorable at room temperature for the nonuniform plant-loaded columns. Reduction to trivalent plutonium improves the desorption rate, increasing the efficiency of the operation.

The selection of the proper $HNO_3$ concentration in the feed solution and the proper volume of wash solution are, of course, the most vital parts of this procedure. The $HNO_3$ concentration of the feed solution may vary from $4M$ to $9M$, depending upon the amount of nitrate salts present and the amount and type to anions in the solution which may complex the plutonium and decrease its sorption by the resin. For example, experi-

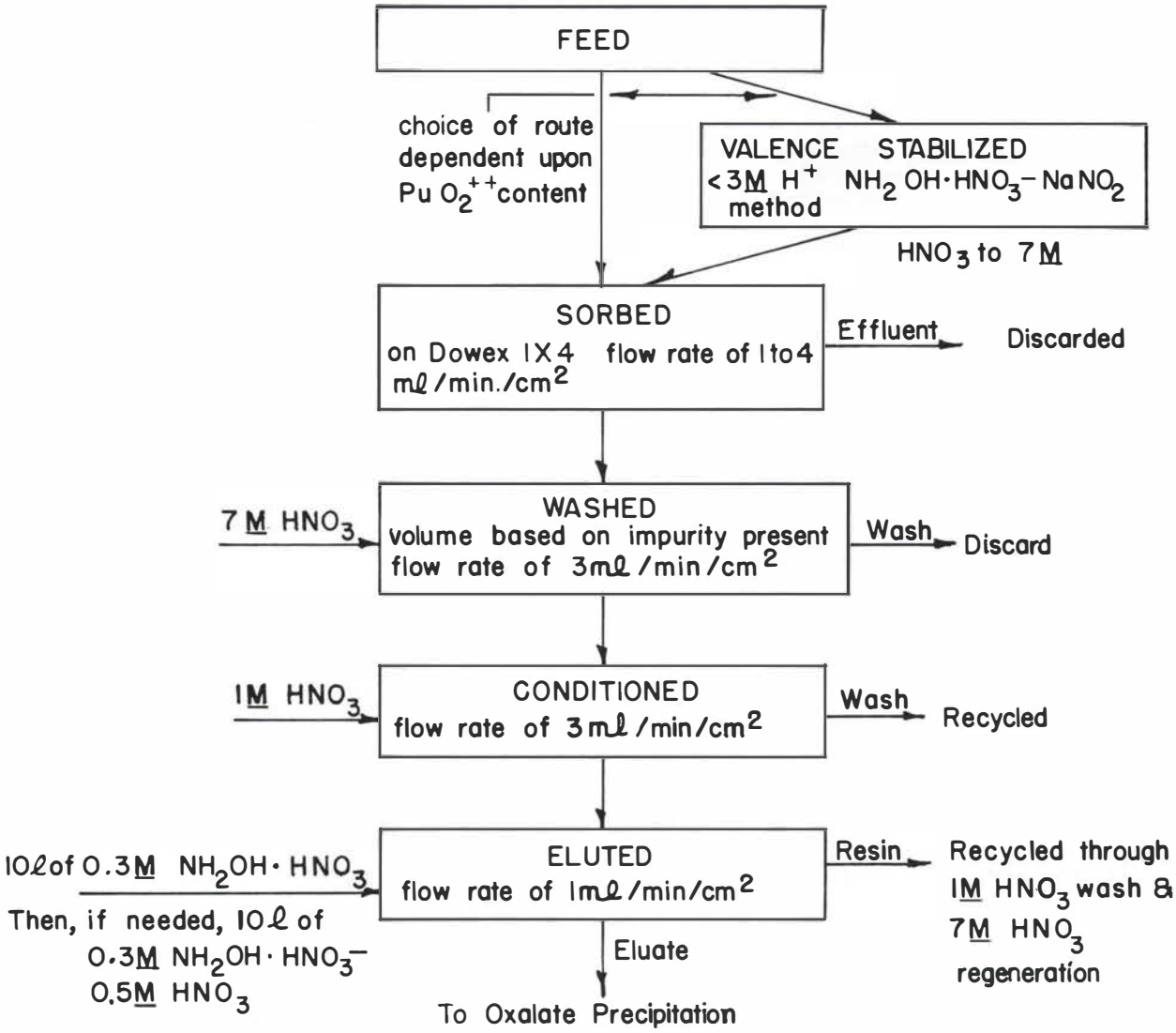


Fig. 54. Flow sheet for general procedure for nitrate anion-exchange processing of plutonium.

ments at Los Alamos have shown that the scavenging of plutonium from 0.3*M* $Al(NO_3)_3$ solutions can be done efficiently at 4*M* $HNO_3$ if no complexing anions such as sulfate, fluoride, or oxalate are present. James has shown[102] that the sorption of plutonium by Dowex-1X4, 50 to 100 mesh, increases with increasing $Al(NO_3)_3$ concentration at a constant $H^+$ concentration. Wheelwright has shown[105] that plutonium can be successfully recovered from oxalate supernatants by increasing the $HNO_3$ concentration to 9*M*. Data from pilot-plant experiments at Los Alamos have shown that a combination of high fluoride and sulfate concentrations interfere with the sorption of plutonium. This effect can be minimized by addition of $Fe(NO_3)_3$ or $Al(NO_3)_3$, but the preferred method is to process the solution with a high fluoride concentration (for example, a solution from the dissolution of reduction residues) by itself without mixing it with a solution that contains a high sulfate concentration (for example, the supernatant from a peroxide precipitation).

Laboratory experiments have shown that large amounts of oxalate (at least up to 0.4*M*) can be tolerated in normal plant solutions (7*M* $HNO_3$-0.2*M* $Al(NO_3)_3$ if the stabilibation procedure for obtaining tetravalent plutonium is followed, allowing at least 24-hr digestion for the $NH_2OH{\cdot}HNO_3$ reduction step. At Los Alamos, we obtain the desired recovery efficiency by using a lengthened reduction step rather than by greatly increasing the $Al(NO_3)_3$ concentration, which may not be consistently successful, or by increasing the $HNO_3$ concentration, which may accelerate degradation of the resin. Wheelwright[105] did not

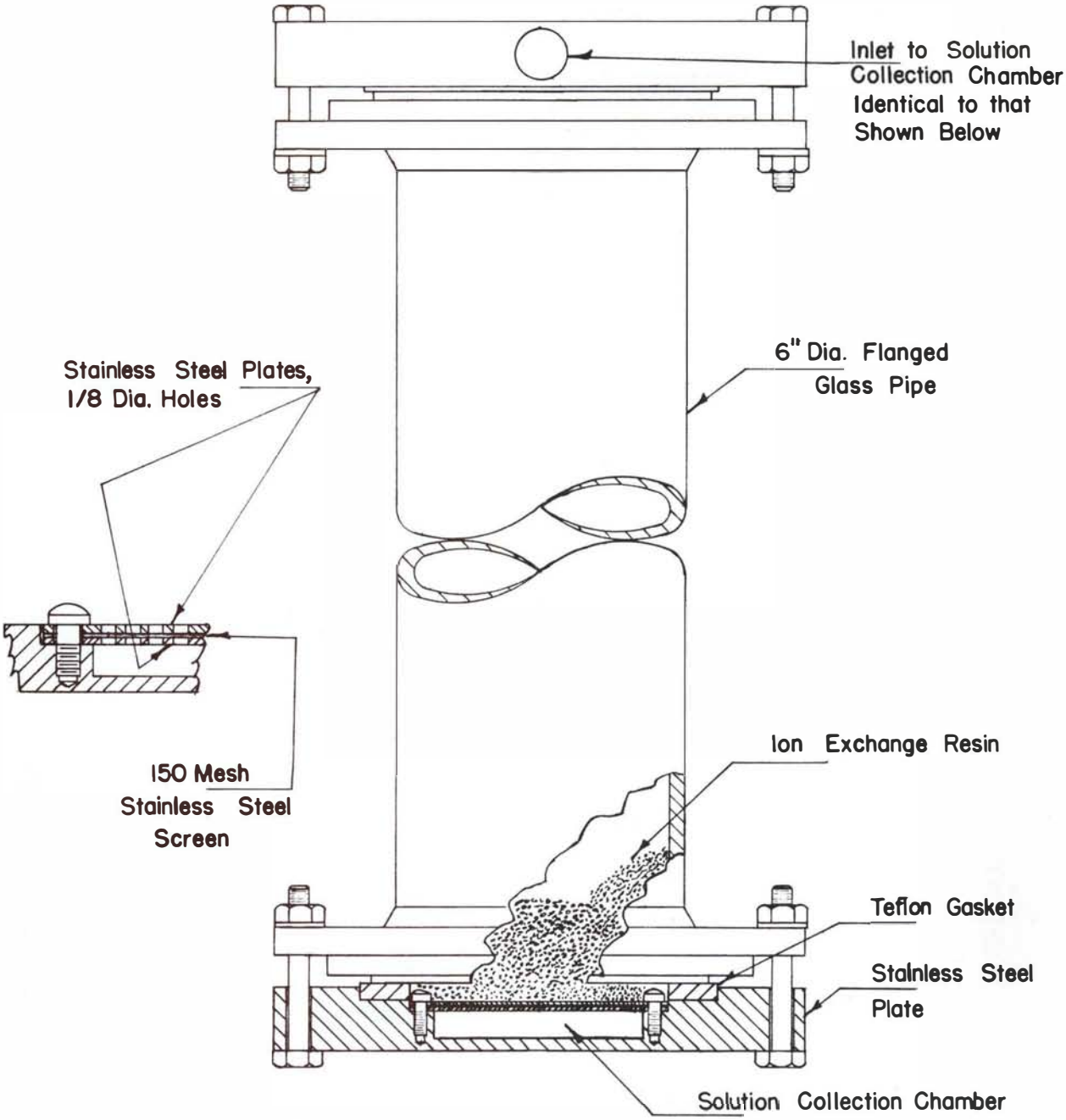


Fig. 55. Ion-exchange column for plant operation.

detect any increase in resin damage by increasing the $HNO_3$ concentration to $9M$, but the presence of impurities such as chromate might change the damage rate, or at least decrease the safety factor of operating at $7M$ $HNO_3$.

James[99] measured the distribution coefficients of several elements from $7M$ $HNO_3$ on Dowex 1X4. These data are reproduced in Fig. 56. It can be seen that the probable impurities can be divided into three groups based on the degree of sorption by the resin, namely, those elements that are apparently not sorbed, those elements that are only weakly sorbed, and those elements that are strongly sorbed. This division of elements is listed in Fig. 57.

After all the $7M$ $HNO_3$ feed solution has been pumped through the 6-in. column, the resin bed is washed with $7M$ $HNO_3$. Normally, the $7M$

DISTRIBUTION COEFFICIENTS

$$D_V = \frac{\text{AMOUNT of SPECIES /ml. of RESIN BED}}{\text{AMOUNT of SPECIES /ml. of SOLUTION}}$$

ROOM TEMPERATURE, 7M $HNO_3$, DOWEX 1-X 4(50-100) $NO_3^-$, LOW-LEVEL LOADING

| | | | | | | | | | | | | | |
|---|---|---|---|---|---|---|---|---|---|---|---|---|---|
| | | | | | | | | | | 13 Al<br>III – 0.0<br>C C | | 15 P<br>V – 0.18<br>C I | |
| 21 Sc<br>III – 0.23<br>C I | 22 Ti<br>IV – 0.0<br>C C | 23 V<br>IV – 0.0<br>C V | 24 Cr<br>III – 0.0<br>C V<br>VI – 8.6<br>CV | 25 Mn<br>II – 0.0<br>C C | 26 Fe<br>III – 0.0<br>C I | 27 Co<br>II – 0.0<br>CV | 28 Ni<br>II – 0.0<br>CV | 29 Cu<br>II – 0.0<br>C V | 30 Zn<br>II – 0.0<br>C I | | 32 Ge<br>IV – 0.0<br>CC | 33 As<br>III – 0.34<br>C I<br>V – 0.27 | 34 Se<br>IV – 0.16<br>C I |
| 39 Y<br>III – 0.0<br>CI | 40 Zr<br>IV – 0.38<br>C C | 41 Nb<br>V – 0.19<br>CI | 42 Mo<br>VI – 0.25<br>CI | | 44 Ru<br>IV – 0.15<br>CV | 45 Rh<br>III – 0.94<br>BE | 46 Pd<br>II – 5.2<br>CV | 47 Ag<br>I – 0.23<br>CI | 48 Cd<br>II – 0.09<br>CI | 49 In<br>III – 0.0<br>CI | 50 Sn<br>IV – 0.0<br>CC | 51 Sb<br>III – 0.0<br>CI<br>V – 0.0<br>CI | |
| 57 Lo<br>III – 1.4<br>C I | 72 Hf<br>IV – 0.24<br>C I | 73 To<br>V – 0.0<br>CI | 74 W<br>VI – 1.6<br>CI | 75 Re<br>VII – 1.6<br>CI | 76 Os<br>IV – 1.7<br>C I | 77 Ir<br>IV – 74<br>CV | 78 Pt<br>IV – 47<br>CV | 79 Au<br>III – 116<br>BE | 80 Hg<br>II – 1.3<br>CI | 81 Tl<br>I – 0.0<br>CI | 82 Pb<br>II – 0.29<br>CC | 83 Bi<br>III – 3.8<br>CI | |

| | | | | | | | |
|---|---|---|---|---|---|---|---|
| 58 Ce<br>III – 1.2<br>C I | 59 Pr<br>III – 0.67<br>CV | 60 Nd<br>III – 0.59<br>CV | | 62 Sm<br>III – 0.24<br>C I | 63 Eu<br>III – 0.18<br>CI | 68 Er<br>III – 0.09<br>CV | 69 Tm<br>III – 0.10<br>CI |
| 90 Th<br>IV – 102<br>BE | | 92 U<br>VI – 3.9<br>CV | | 94 Pu<br>IV – 978<br>BE | | | |

ATOMIC SYMBOL
NUMBER

VALENCE = $D_V$
METHODS

CI - COLUMN - ISOTOPE
CC - COLUMN - CHEMICAL
CV - COLUMN - VISUAL
BE - BATCH - EQUILIBRATION

ERROR:
Approximate % average deviation from mean
$D_V$ = 0.0 → 0.5; 50 → 15 %
$D_V$ = 0.5 → ; ~10 %

Fig. 56. Distribution coefficients for certain elements in a nitrate anion-exchange system.

| ELEMENTS | | |
|---|---|---|
| NO SORPTION<br>Distribution Coefficient<br>= 0 | WEAK SORPTION<br>Distribution Coefficient<br>< 4 | STRONG SORPTION<br>Distribution Coefficient<br>> 5 |
| Mg | Sc | Pd |
| Al | As | Ir |
| Ti | Se | Pt |
| V | Zr | Au |
| Cr | Nb | Th |
| Mn | Mo | |
| Fe | Ru | |
| Co | Ag | |
| Ni | Cd | |
| Cu | La | |
| Zn | Hf | |
| Ga | W | |
| Ge | Re | |
| Y | Os | |
| In | Hg | |
| Sn | Pb | |
| Sb | Bi | |
| Ta | Ce | |
| Tl | Rare Earths | |
| | U | |
| | Am | |
| | Rh | |

Fig. 57. Classification of elements by degree of sorption on Dowex-1X4 resin from a nitrate media.

$HNO_3$ does not significantly disturb the sorbed plutonium but it does remove enough plutonium so that the wash must be discarded as hot waste. Only one or two column volumes (where volume is defined as void volume) of wash are sufficient to remove from the column those elements that are not sorbed by the resin phase. This is a matter of solution displacement rather than desorption of the impurity elements.

The removal of the weakly sorbed elements is more complex. One might expect the weakly sorbed elements to be forced out of the resin phase during the loading step by the advancing wave of sorbing plutonium. However, investigations have shown that this is not the case.[33] The presence of the plutonium decreases the rate of diffusion within the resin phase. Since this is the rate controlling mechanism, the impurities are

somewhat "trapped" by the plutonium. Thus, much greater amounts of wash are needed than would be predicted by a simple, no-interaction model, using the distribution coefficients shown in Fig. 56. For example, zirconium with a distribution coefficient of 0.38 should be readily removed by 3 or 4 column volumes of *7M* $HNO_3$ wash, yet 6 to 8 column volumes are required before the zirconium content of the eluate will be reduced to <50 ppm, based on plutonium.

Similarly, elements such as $Hg^{2+}$, $Ce^{3+}$, $UO_2^{2+}$, and $Bi^{3+}$ require much more wash for their removal than do elements such as $Zr^{4+}$, $La^{3+}$, and $Am^{3+}$ even though the distribution coefficients vary only from 0.38 to 3.8. For example, $Ce^{3+}$, with a $D_v$ of 1.2, can be quantitatively removed with 40 liters of *7M* $HNO_3$ wash, while $Hg^{2+}$, with a $D_v$ of 1.3, has been observed to remain on the column even after 70 liters of *7M* $HNO_3$ wash. At Los Alamos, several runs have been observed in which mercury was not removed by 14 column volumes of *7M* $HNO_3$, but was removed during the elution of the plutonium. Thus, when the plutonium was precipitated as the oxalate, the mercury also precipitated. During the ignition to oxide, the appearance of a red compound indicated the formation of mercuric oxide. Therefore, when mercury is a known contaminant, the volume of *7M* $HNO_3$ wash is increased to 20 column volumes to assure complete removal of the mercury. A smaller volume may sometimes be sufficient, but the volume saved is negligible compared to time spent in analyses or in recycling the plutonium if the mercury content is high in the product solution.

If the feed solution contains mercury but the plutonium concentration is low enough so that additional solutions will be passed through the column until ~400g of plutonium have been sorbed, then the volume of *7M* $HNO_3$ wash may be reduced if the final feed solutions are free of mercury since they will, as far as mercury contamination is concerned, serve as wash solutions.

If molybdenum is present as molybdic acid, it will be sorbed on the column with a $D_v = 0.25$. The molybdic acid can be removed with 4 to 6 column volumes of *7M* $HNO_3$, provided that the molybdate has not been allowed to form. If it is not removed prior to the elution step, then molybdate will be formed, for which, at dilute acid, the distribution coefficient becomes very large and at <0.5*M* $H^+$ approaches infinity.[106] Thus, if molybdic acid is present it must be completely removed by washing or it will act somewhat like the platinum metals in that it will stay on the resin during the elution cycle. During the succeeding loading and washing steps, however, the molybdenum oxy-anion will be converted to molybdic ion and washed off the column by the *7M* $HNO_3$.

The procedure used for the separation of plutonium and uranium is basically the same as for other solutions; however, for solutions with a high uranium-to-plutonium ratio, up to 6 to 1, a longer resin bed is needed. The feed solution is fed to the top of the column at a flow rate of 10 liters/hr, which is equivalent to ~ 1 ml/min/cm$^2$. The distribution coefficient of uranium (VI) ($D_v = 3.9$) is sufficiently high to cause the plutonium band to spread down the column more rapidly than if a cation with a smaller distribution coefficient was present. Consequently, the length of the resin bed must be considerably longer for a given quantity of plutonium than would normally be allowed. This is accomplished at Los Alamos by installing a second 24-in. long column in series if the plutonium in the batch to be processed exceeds 200 g. The second or backup column is not eluted at the end of the run, but is disconnected at the end of the washing cycle to be used as the lead column for the succeeding batch. The columns are washed with *7M* $HNO_3$. Evaluation of process data has shown that 30 column volumes (~150 liters) must be used to reduce the uranium content to <100 ppm based on plutonium. The flow rate of the wash may be increased to ~20 liters/hr without significantly affecting the desired uranium and plutonium concentration of the effluent. If the uranium content of the eluate exceeds 100 ppm, then the final separation is accomplished by either recycling the eluate through ion-exchange or by precipitating plutonium peroxide or plutonium oxalate.

The separation of plutonium and cerium has become a subject of great interest because of the selection of the ternary Pu-Co-Ce alloy as the fuel for the LAMPRE program. Laboratory experiments have shown that $Ce^{4+}$ is very strongly sorbed by the anion-exchange resin, so that the first assumption is that cerium will follow the plutonium stream through all stages. Fortunately, however, the $Ce^{4+}$ is reduced to $Ce^{3+}$ by the plutonium present. As shown in Fig. 56, $Ce^{3+}$ has a $D_v$ of only 1.2. This would then indicate that the cerium could be washed from the column without disturbing the plutonium and, indeed, plant experience has shown that the cerium content of the product is reduced to <50 ppm, based on plutonium, with only 40 liters of *7M* $HNO_3$.

The fraction of impurity remaining on the

column as a function of wash volume (in column volumes) for elements that have a distribution coefficient of 4 is shown as the curve in Fig. 58. This curve represents numerical calculations which have been verified by experiment. The tailing due to kinetic trapping is apparent. For elements with distribution coefficients of less than 4, the curve would be shifted to the left and would show less tailing.[34] For elements with higher distribution coefficients, the removal of impurities by washing with $7M$ $HNO_3$ becomes inefficient.

Although the three platinum metals are strongly sorbed by the resin and therefore cannot be efficiently removed during the washing step, they can be separated from the plutonium because they are not removed by the hydroxylamine nitrate solution used to strip the plutonium. The decomposition of the nitrate complexes of the platinum metals is kinetically inert, so that the sorbable anionic complexes remain, even in the presence of the lower nitrate concentrations.[33] Thus, since these metals are not removed by either the washing or stripping steps as successive runs are made with same column, they will poison the resin and lower its capacity for plutonium. Therefore, using the loading, washing, and eluting procedures discussed above, plutonium can be separated from all elements except thorium and neptunium.

## 8.7 Chloride Anion-Exchange Systems

Thorium can be separated from plutonium by use of a chloride anion-exchange system.[92] Thorium does not form sorbable anionic chloride complexes in a strong hydrochloric acid solution, whereas plutonium behaves much the same way as in nitric acid. The flow sheet for the procedure for separating these two elements by anion-ex-

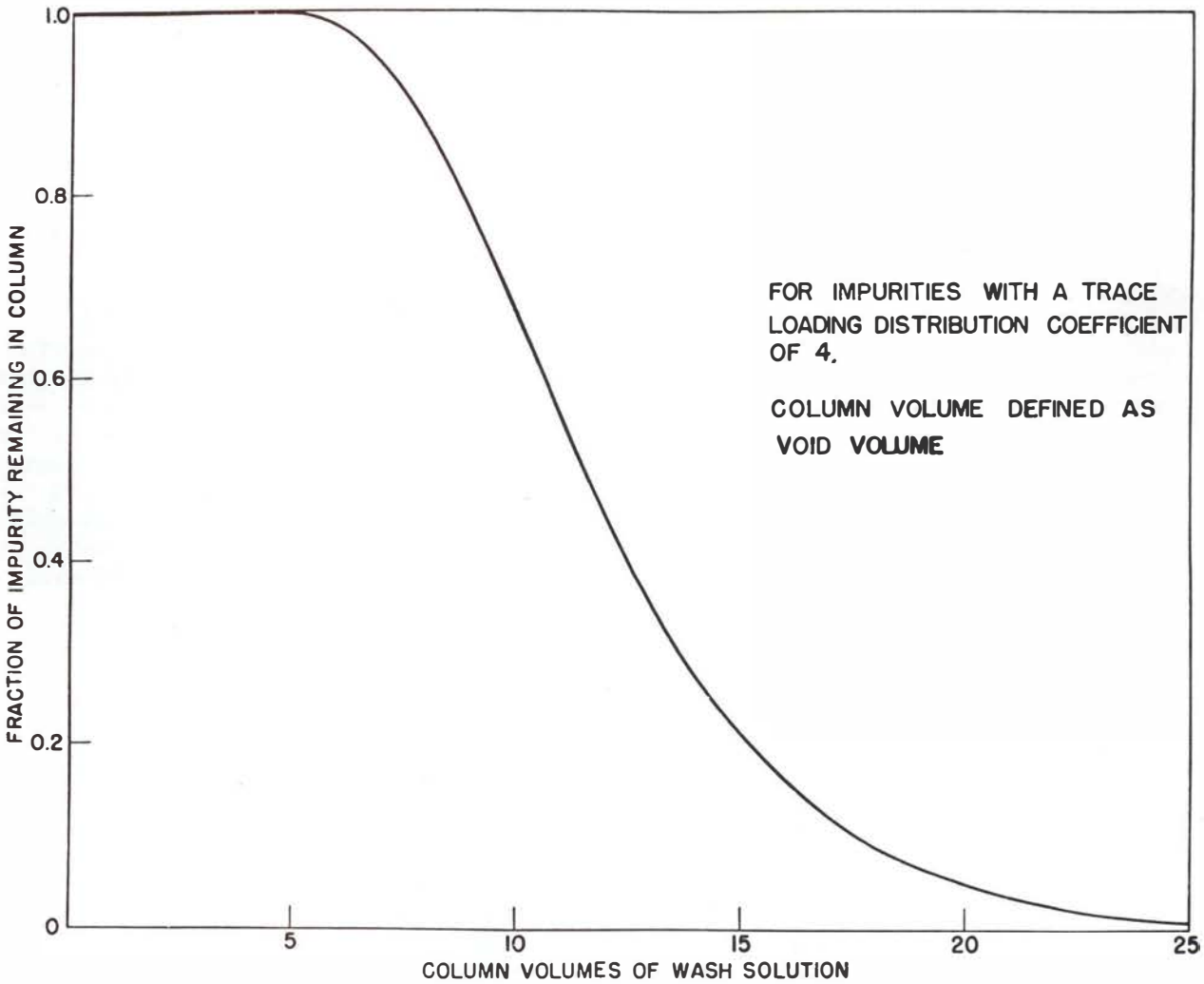


Fig. 58. Fraction of impurity remaining on column during wash cycle.

change from *7M* HCl using Dowex 1X4 (50 to 100 mesh) chloride form is shown in Fig. 59.

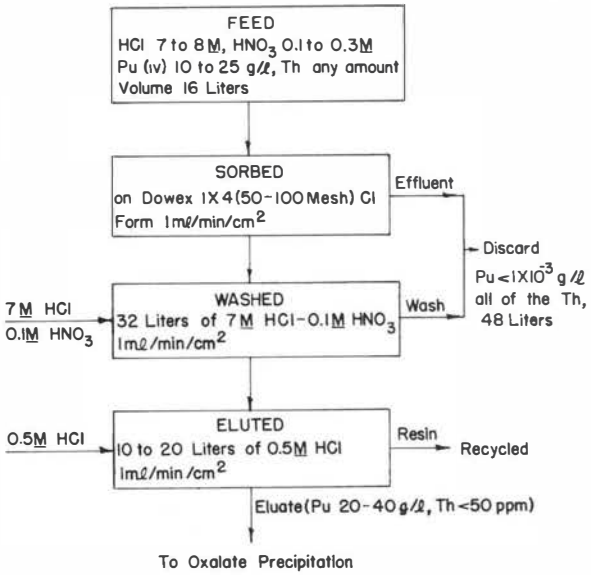


Fig. 59. Flow sheet for chloride anion-exchange process.

The separation of neptunium and plutonium can be achieved by reducing the plutonium to the trivalent state (with HI or $NH_2OH{\cdot}HCl$, for example) and sorbing the anionic chloride complex of neptunium from strong HCl solutions onto Dowex 1X4 (50 to 100) chloride, letting the plutonium pass through with the effluent. The separation of neptunium and plutonium can also be achieved in a nitrate anion-exchange system; however, since strong reducing agents such as hydrazine or semicarbazone are required to reduce the plutonium to the trivalent state in high $NO^-_3$ systems, we prefer to make the separation in the chloride anion-exchange system.

Several cations interfere with the efficient operation of a chloride anion-exchange column, such as $Fe^{3+}$, Sb(V), Sn(IV), $Hg^{2+}$, and $Tl^{3+}$. Therefore, a nitrate anion-exchange column is used to remove these elements before the plutonium-thorium or plutonium-neptunium separation is attempted in a chloride anion-exchange system.

## 8.8 Organics

Organics that have been contaminated with plutonium often require special recovery procedures because of the incompatibility of organics with routine separation processes. The organic may be undesirable in solvent extraction systems because of the dilution of the organic phase, the creation of stable emulsions that will interfere in phase separation, or the formation of a nonextractable species by complexing with the plutonium. The organic may be undesirable in ion-exchange systems because of the possibility of reacting violently with the *7M* $HNO_3$ used in anion-exchange procedures, reducing plutonium sorption by coating the resin beads, or forming nonsorbable species with plutonium. Special recovery methods are employed on a batch basis for such organics whenever the addition of the organic to the process stream will have an undesirable effect on the routine separation process.

Organics such as methanol, ethanol, and acetone react violently with high nitric acid systems such as are found in the nitrate anion-exchange processes. For many years the plutonium in these reactive, volatile chemicals was recovered by distillation of the volatile component in a high air-flow system to prevent accumulation of an explosive vapor mixture. If only a small amount (several hundred milliliters) of such a volatile organic had to be processed, the solution was often placed in a beaker in a glove box having a high air flow and allowed to stand, at room temperature, until the organic had evaporated. The residue was mainly a room-temperature oxide of plutonium which could be readily and safely dissolved in an $HNO_3$-HF mixture.

Such methods were undesirable when the volume of such residues became appreciable. Consideration of other available recovery methods suggested that the high nitric acid problem could be avoided by using a hydroxide precipitation method for the recovery of plutonium. Experimental and production data indicated that this could be done routinely, reducing the plutonium concentration to $<1 \times 10^{-4}$ g/liter using the $Fe(OH)_3$ carrier precipitation described in Section 8.4.6.

Ethanol and methanol may be disposed of by adding them dropwise to a nitric acid solution that had been heated to ~105°C. However, such a method requires close control because the reaction may become violent. These volatile organics are now being processed with the electrorefining residues during the NaOH dissolution and precipitation step discussed in Section 4.10.

Another way in which these alcohol and acetone residues have been safely processed is to combine them with the low acid feed to the cation-exchange column that is used to convert chloride solutions to nitrate solutions. The flow

sheet for this method is shown in Fig. 53 and described in Section 8.5. This method is satisfactory for the nearly quantitative recovery of plutonium but no more so than the hydroxide method used in processing electrorefining residues. Therefore, these volatile organics are processed by whichever method is in operation at that moment because of the nature of the other residues in the recovery system.

Hydrophobic organics are not compatible with ordinary precipitation methods for the recovery of plutonium, nor is the use of an aqueous cation-exchange system particularly amenable. Experimentation showed that the most promising recovery methods would involve direct filtration of the organic or equilibration of the organic with an aqueous solution of some plutonium complexing agent, followed by filtration and phase separation.

The direct filtration method is used on inert organics such as cutting or lapping oils. The lapping oil used during grinding operations is a mixture of mineral oil and lard; plutonium particles of metal or oxide can be removed by filtration through a sintered glass frit of fine porosity. Equilibrations of the lapping oil with aqueous solutions result in extremely stable emulsions that can be broken by heating but not by filtering or by standing for several days. The plutonium content of the lapping oil is routinely reduced to $<10$ mg/liter by this method.

## 8.9 Solvent Extraction

Between May 1943 and March 1944, experiments demonstrated the feasibility of purifying plutonium by precipitating sodium plutonyl acetate, dissolving the precipitate in nitric acid, and extracting plutonyl nitrate with diethyl ether.[3] This system was used from March 1944 to July 1944 for purification of plutonium on the gram scale, employing two sodium plutonyl acetate precipitations and two diethyl ether extractions of plutonyl nitrate. This process did not, however, separate uranium from plutonium. Other elements also followed the plutonium and could not be brought below the maximum permissible level even with repeated cycling.

Research showed that after the reduction of the plutonium with HI, the precipitation of plutonium tri-oxalate would leave uranium in the supernatant. The combination of this precipitation with two sodium plutonyl acetate precipitations and two diethyl ether extractions was called Process "A" (see Fig. 1). This process was used until July 1945 when experiments showed that the acetate precipitations could be eliminated because the nitrate feed from Hanford contained less zirconium and niobium than anticipated. Therefore, when purification operations were transferred to DP Site in September 1945, the acetate precipitations were eliminated and the resulting process of two ether extractions and an oxalate precipitation was called Process "B" (see Fig. 3).

After a few months, the purity level of the feed had increased to a level that permitted the omission of the ether extraction. Therefore the use of Process "B" was terminated and Process "C", consisting only of an oxalate precipitation of the plutonium, then became the only step in the purification process (see Fig. 4). This process was sufficient for the nitrate feed received from Hanford but was not sufficient for removal of impurities from the recycle streams. After consideration of various separation methods, it was decided that some type of solvent extraction would be needed as part of the recovery process. Solvent extraction would allow many otherwise difficult separations and also provide a method for reducing the plutonium content of waste solutions to below the established discard level of 0.1 mg/liter. Solvents that were considered included Hexone, di-butyl carbitol, penta-ether, tri-n-butyl phosphate, and thenoyl-tri-fluoroacetone.

Solvent extraction experimentation was begun in December 1947, looking first at thenoyl-tri-fluoroacetone (TTA) as a plutonium extractant.[107] By April 1948, it became apparent that TTA would be most difficult to use with plant solutions. One of the many problems was the formation of the red solids when iron was present; these collected at the interface and interfered with phase separation.

Since other methods appeared more promising, such as ion-exchange and certain precipitations, work on solvent extraction was suspended until mid-1950. A survey of the literature then available led to the selection of the tri-n-butyl phosphate system for recovery of plutonium from slag and crucible solutions. Using the procedure developed at ORNL,[108] experiments were made to determine the behavior of plutonium in the solutions obtained by dissolving reduction crucibles in $HNO_3$-$Al(NO_3)_3$. These experiments showed that $\sim$ 95% of the plutonium was extracted in the first equilibration. The next four extractions, using fresh solvent each time, removed an additional 4.5%, leaving 0.5% of the original $\alpha$ activity still in the effluent. Analytical data showed that

a large portion of the residual activity was due to americium, which experiments showed would extract into the organic phase with low acid-high salt feed solutions.[109, 110]

### 8.9.1 Packed Columns

Consideration of these data led to the installation of 14-ft packed columns for the extraction of plutonium from dissolved crucible solutions at high acid (5 to 6*M* $HNO_3$) concentrations. This process, whose flow sheet is shown in Fig. 60, extracted >98% of the plutonium and almost none of the americium. Solutions with high oxalate or fluoride content could also be processed in these columns if $Al(NO_3)_3$ was added. The complex of oxalate or fluoride with aluminum is stronger than with plutonium, thus freeing the plutonium for complex formation with the TBP.

A schematic of the solvent extraction columns is shown in Fig. 61. The columns were packed with stainless steel Raschig rings that were 0.5 in. o.d., 0.468 in. i.d., and 0.3 in. long. The solutions were pumped through the columns with Milton-Roy piston pumps. The composition of a typical feed solution is shown in Fig. 62.

With a free acid concentration in the aqueous phase of 5 to 6*M* and flow rates of 17 gal./hr for the aqueous feed and 16 gal./hr for the solvent phase, the plutonium was routinely reduced to the milligram per liter range in the raffinate.

The loaded solvent was pumped to the next column where the plutonium was stripped by a 0.05*M* $NH_2OH{\cdot}HNO_3$-0.1*M* $HNO_3$ solution. Other methods of stripping the plutonium from the solvent were tried but were deemed unsatisfactory for this system for various reasons. A dilute acid ($HNO_3$) solution would not remove enough plutonium during a single pass through this column. A solution such as 0.15*M* $NH_2OH{\cdot}HNO_3$-0.01*M* $Fe^{2+}$-0.1*M* $HNO_3$ efficiently stripped the plutonium from the solvent, but the iron created new problems during subsequent evaporation. Electrolytic stripping did not have the desired efficiency. A dilute oxalic acid solution efficiently removed the plutonium, but plutonium oxalate precipitated in the column, coating all surfaces. The removal of this precipitate was difficult and could have led to a nuclear excursion under certain conditions. Therefore, 0.05*M* $NH_2OH{\cdot}HNO_3$-0.1*M* $HNO_3$ was chosen as the routine strip solution.

This strip solution, after leaving the bottom of column number 2 (Fig. 61), was pumped to

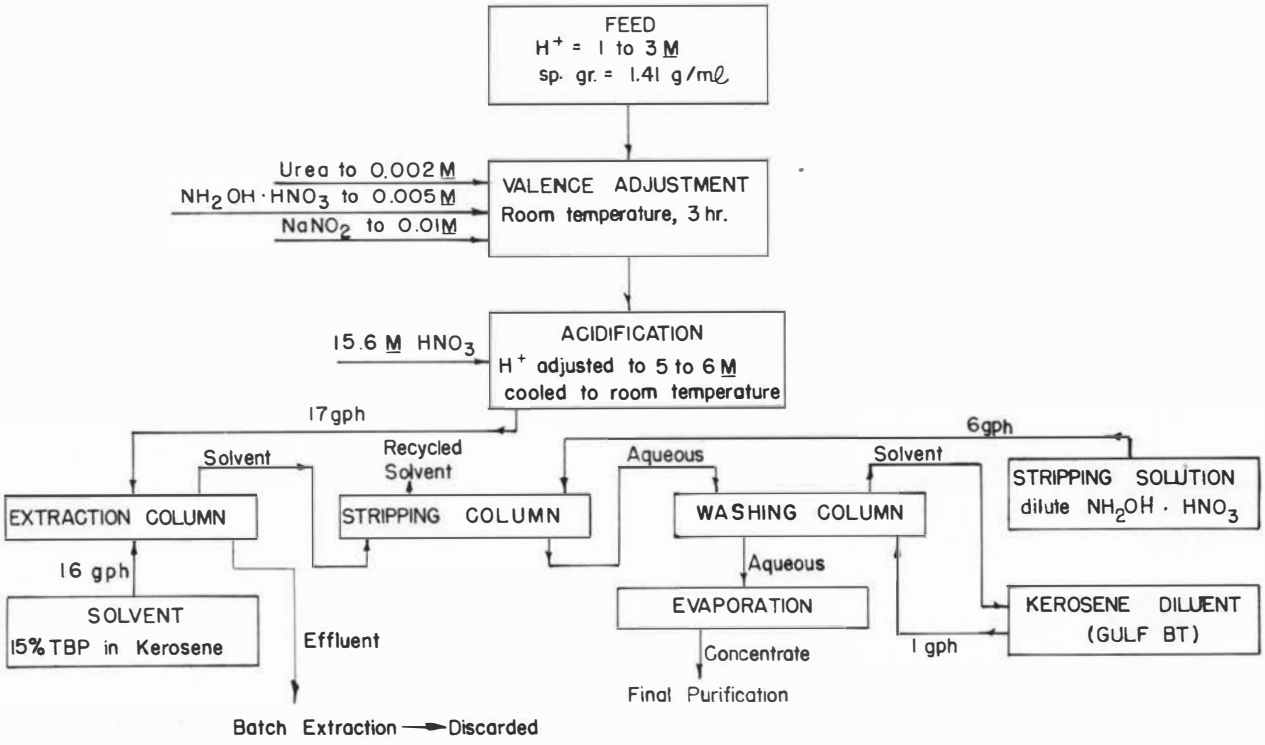


Fig. 60. Flow sheet for extraction of plutonium by tri-n-butyl phosphate using packed columns.

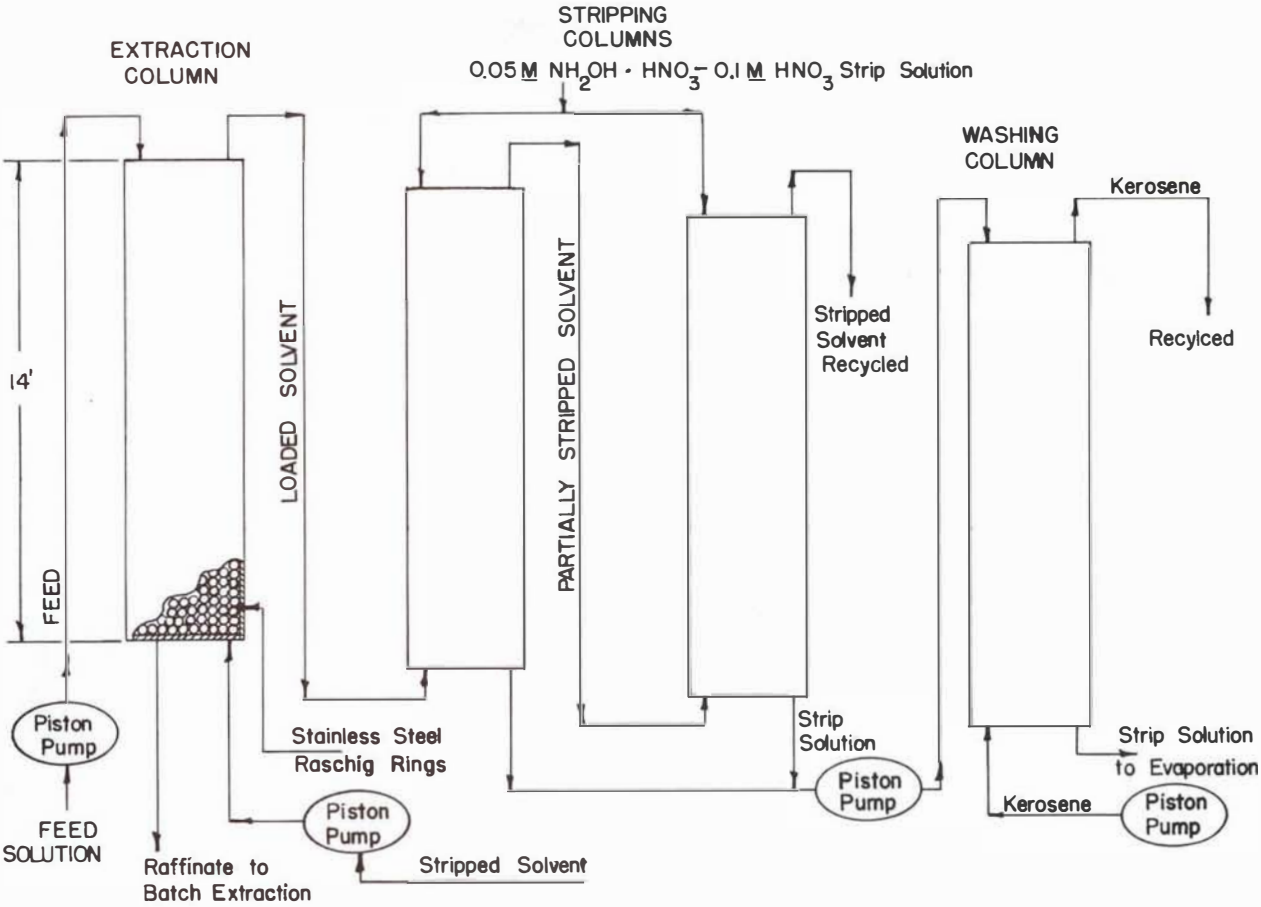


Fig. 61. Solvent extraction system used from 1950 to 1959.

| CONSTITUENT | AVERAGE CONCENTRATION |
|---|---|
| Mg | 1.9 M |
| Co | 0.3 |
| Fe | 0.1 |
| Aℓ | 0.3 |
| F | 0.38 |
| I | TRACE |
| $NO_3$ | 5-6 M |
| Pu | $>2\times10^{-2}$ g/ℓ |

Fig. 62. Composition of typical feed solution for the solvent extraction system.

the top of column number 3. Fresh kerosene was introduced at the bottom to scrub any traces of solvent that may have carried over from the strip column. After passing through this column, the aqueous strip was transferred to glass-lined evaporators for concentration. The concentrate from this process was purified in other smaller scale solvent extraction equipment which will be discussed later.

## 8.9.2 Solvent Purification

The solvent that was used in the columns and in the batch extraction systems was constantly being degraded by the high acid concentrations and by radiation. The degradation products, mono- and di-butyl phosphate, were kerosene-soluble and formed such a tight complex with plutonium that the $NH_2OH{\cdot}HNO_3$ could not extract the plutonium from the organic phase. Therefore, as the concentration of these degradation products increased, the plutonium concentration of the solvent after stripping would increase and, as the plutonium concentration of the solvent increased, it became more and more difficult to reduce the plutonium concentration of the raffinate to the desired milligram per liter level. To reduce the plutonium content of the solvent phase, the mono- and di-butyl phosphate contaminants would have to be removed. It was found that the degradation

products could be removed by extraction into a 2*M* NaOH phase where the plutonium would precipitate as the hydroxide. By filtering the mixture (solids, aqueous phase, and organic phase), the phases could be separated and enough of the plutonium could be removed so that we could discard the aqueous phase; the organic phase, which was now essentially free of degradation products and plutonium, could be acidified and recycled.

### 8.9.3 Batch Extraction System

The raffinates, containing nearly equal amounts of plutonium and americium at the milligram per liter level, were transferred to another process where, after neutralization of most of the acid, they were equilibrated with fresh TBP on a batch basis until the total $\alpha$ activity was reduced to a value equivalent to no more than $1 \times 10^{-4}$ g of plutonium per liter. The first extraction in this system was made in July 1953. Until then attempts had been made to use the cation-exchange method mentioned in Section 8.4.

The equipment for the batch extraction system consisted of a large-diameter tank equipped with a stirrer for the equilibration and settling stages and large-diameter tanks for strip make-up and for holding raffinate, solvent, and strip solutions after phase separations had been completed. These are shown schematically in Fig. 63. The process consisted of putting 25 gal. of 35% TBP-65% Gulf BT in the equilibration tank and adding 75 gal. of column raffinate. This mixture was equilibrated for 5 min by the stirrer; the stirrer was then stopped and the phases were allowed to separate. The aqueous phase was then withdrawn to the raffinate holding tank, leaving the solvent in the equilibration tank.

During the equilibration, 25 gal. of dilute (0.01*M*) oxalic acid strip solution was prepared and, after the raffinate had been withdrawn, this solution was pulled into the equilibration tank to be mixed with the loaded solvent. After equilibration and phase separation, the aqueous strip solution was transferred to an evaporator for concentration. The stripped solvent was then ready to receive another charge of raffinate for batch extraction of the plutonium and americium.

Each raffinate was recycled until the alpha activity was reduced to an equivalent of $1 \times 10^{-4}$ g of plutonium per liter. So much americium was present in all of the raffinates that the extractions were carried out at a feed acidity of 0.1*M* $H^+$ to get the americium to extract. Even at high salt concentrations, the extraction of americium and plutonium to the discard level of $10^{-4}$ g/liter required many extractions. When large quantities of strong complexing agents such as oxalate, citrate, or phosphate were present, as many as 20 extractions were necessary to reach the discard concentration.

Solutions with a high sulfate or phosphate content also required a large number of equilibrations before the plutonium could be extracted to a concentration equal to or less than the established discard level. The extraction performance was markedly improved when ferrous ammonium sulfate was added until only $Pu^{3+}$ was present and, at the same time, adding $Al(NO_3)_3$ to complex the $SO_4^{2-}$ and to increase salting strength of the

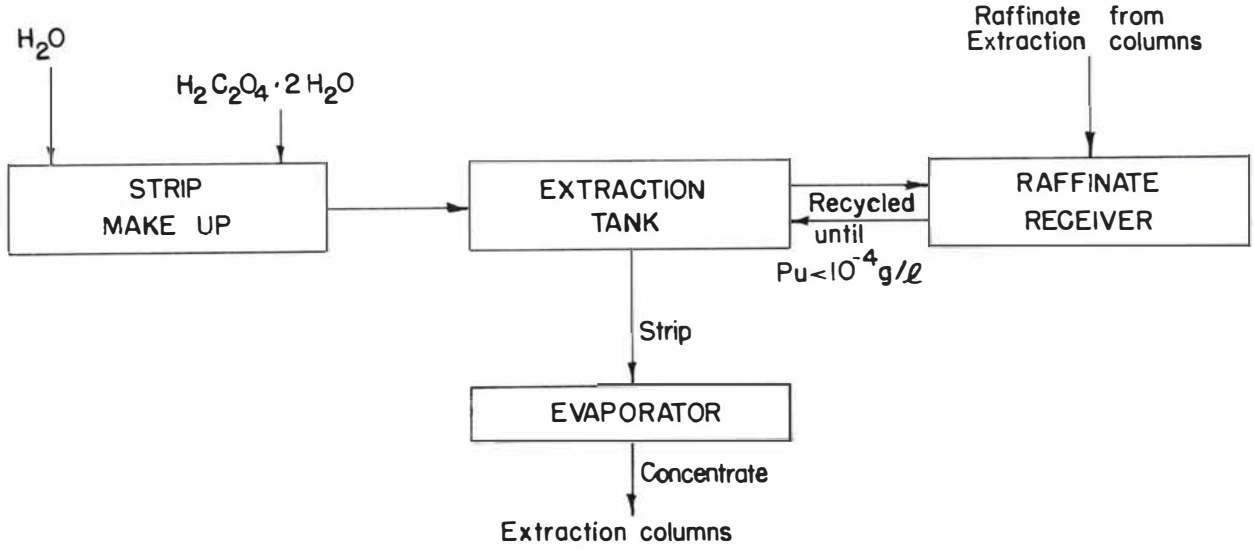


Fig. 63. Batch extraction system.

solution, and adding NaOH until the $H^+$ had been reduced to $<0.1M$.[39, 73] Many other methods were investigated, both on the laboratory and the pilot-plant scale, for the scavenging of plutonium from column raffinates. Mixer-settler columns, calcium oxalate carrier precipitations, ferric hydroxide carrier precipitations, cation-exchange, anion-exchange, and other solvent extraction systems were tried, but not until the discard level was raised to $1 \times 10^{3-}$ g of plutonium per liter was it possible to successfully replace the batch extraction system with an anion-exchange column. Discussions of the various substitute systems are given in Sections 8.1, 8.4.2, 8.4.6, 8.5, 8.6, and 8.9.4.

### 8.9.4 Pump-Mix Trays and Mixer-Settler Columns

The concentrated strip solution from the packed extraction columns required purification before it was compatible with the peroxide precipitation step in the metal preparation system. Several precipitation methods were investigated but none gave the degree of purification required. Thus, at first, the concentrated strip solution was purified by batch extraction of the plutonium with TBP. The equipment was simple in design and included the extractor shown in Fig. 64 and

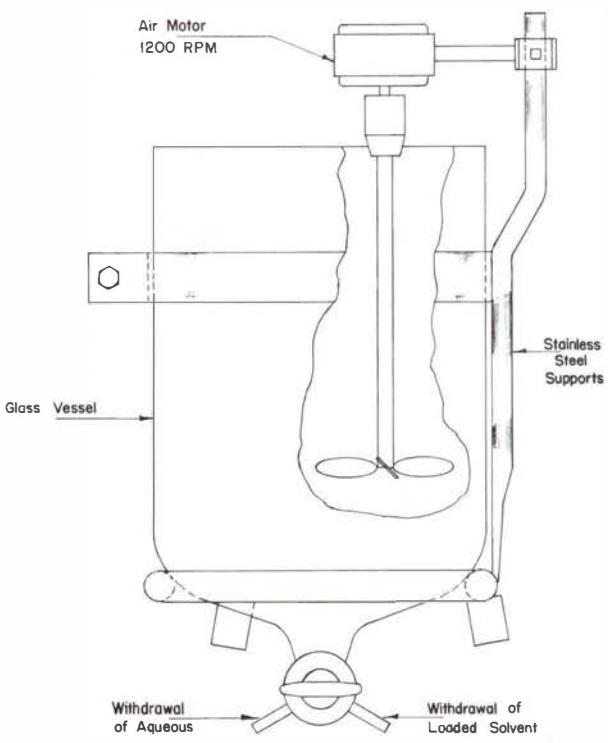


Fig. 64. Batch extractor for purifying concentrated column strip solutions.

standard cylindrical stainless steel tanks for the various receiving and storing stages in the process. This operation was time-consuming as is evident from the many steps given in the flow sheet shown in Fig. 65. In 1952, a 12-stage pump-mix unit similar to the two-stage unit shown in Fig. 66 was put in operation, greatly increasing the processing rate in the purification of plutonium from the concentrated strip solution. The aqueous feed was fed to this unit at the rate of 9 liters/hr. Other operating conditions are shown in the flow sheet shown in Fig. 67. This unit was operated with fair efficiency until 1955, when a continuing experimental program showed that greater efficiency and a purer product could be obtained with a York-Scheibel column. A sketch of a typical column is shown in Fig. 68. The feed solutions were treated for stabilization of $Pu^{4+}$ using the $NH_2OH \cdot NaNO_2$ method discussed in Section 8.3. With such treatment, overall distribution coefficients for plutonium of >20,000 were routinely obtained using the procedure shown in the flow sheet given in Fig. 69. The plutonium in feed solutions of $4M$ $HNO_3$ - $0.5M$ $Al(NO_3)_3$ was readily separated from impurities such as lanthanum, americium, iron, calcium, magnesium, and aluminum but not from elements such as zirconium, uranium, thorium, cerium, and bismuth. Since this column was used for the concentration of the plutonium in the strip solution from the packed columns, where considerable purification had already been accomplished, the decontamination factors listed in Fig. 70 were acceptable.

As more experience was gained in the operation of these columns, it was found that any solids present in the feed, or solids that might precipitate during extraction, such as $SiO_2$ when the acidity of the aqueous phase was being changed by the extraction of $H^+$ by the TBP, would accumulate in the packed screen section and eventually block the column or cause poor phase separation. Once the solids lodged in the screened section, it was almost impossible to get them out. Therefore a new column design was sought. The experimental design and pilot plant work resulted in the column shown in Fig. 71. This column, using multi-layer Teflon settling areas instead of screens, was used for several years with TBP as the extractant for the purification of the plutonium in the concentrated strip solution from the packed columns. The operating conditions that were selected for normal operation are shown in the flow sheet in Fig. 69. Analytical data for the impurity content of a typical plutonium nitrate product are given in Fig. 72.

The plutonium was stripped from the solvent

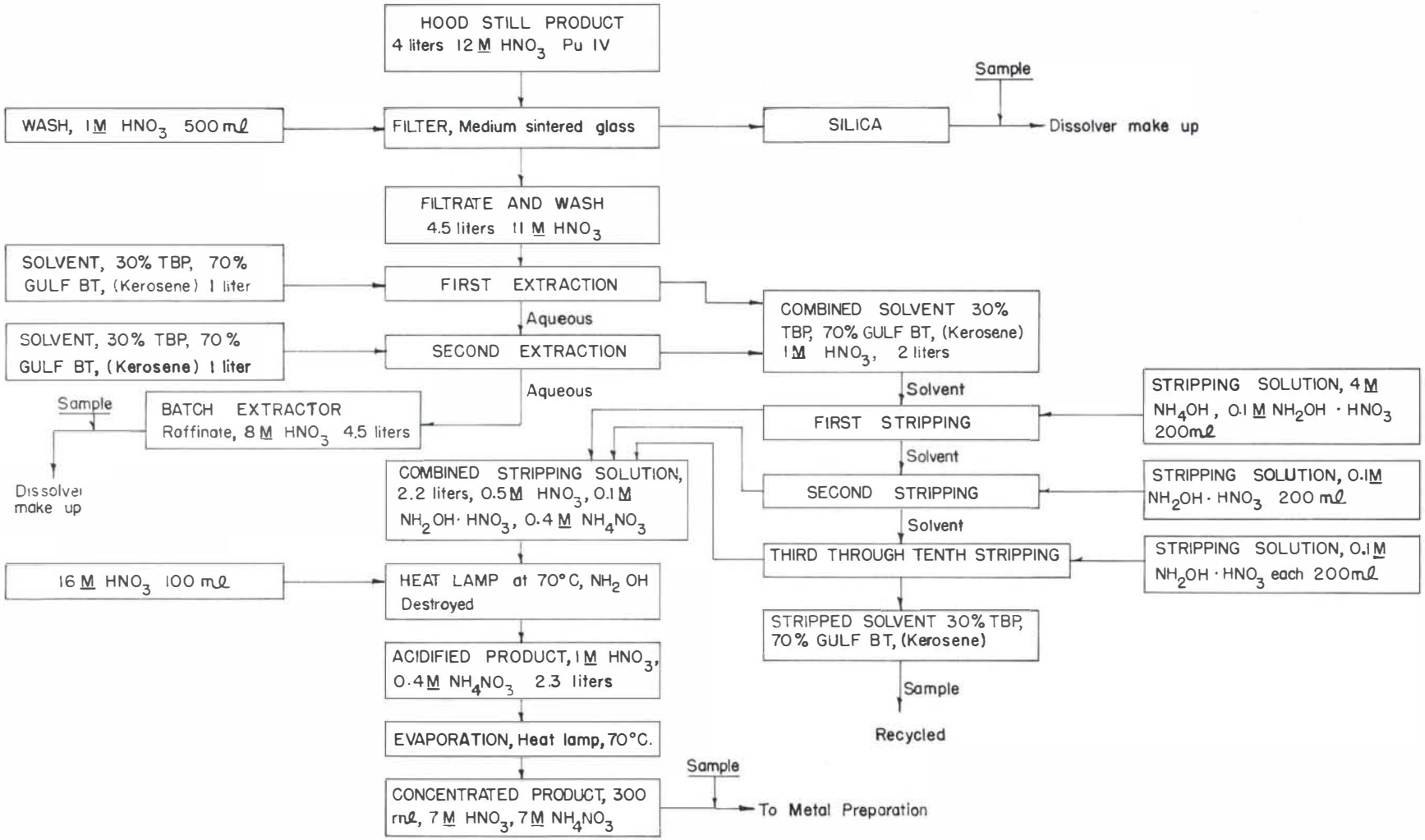


Fig. 65. Flow sheet of process used in 1950 and 1951 for concentration of column product.

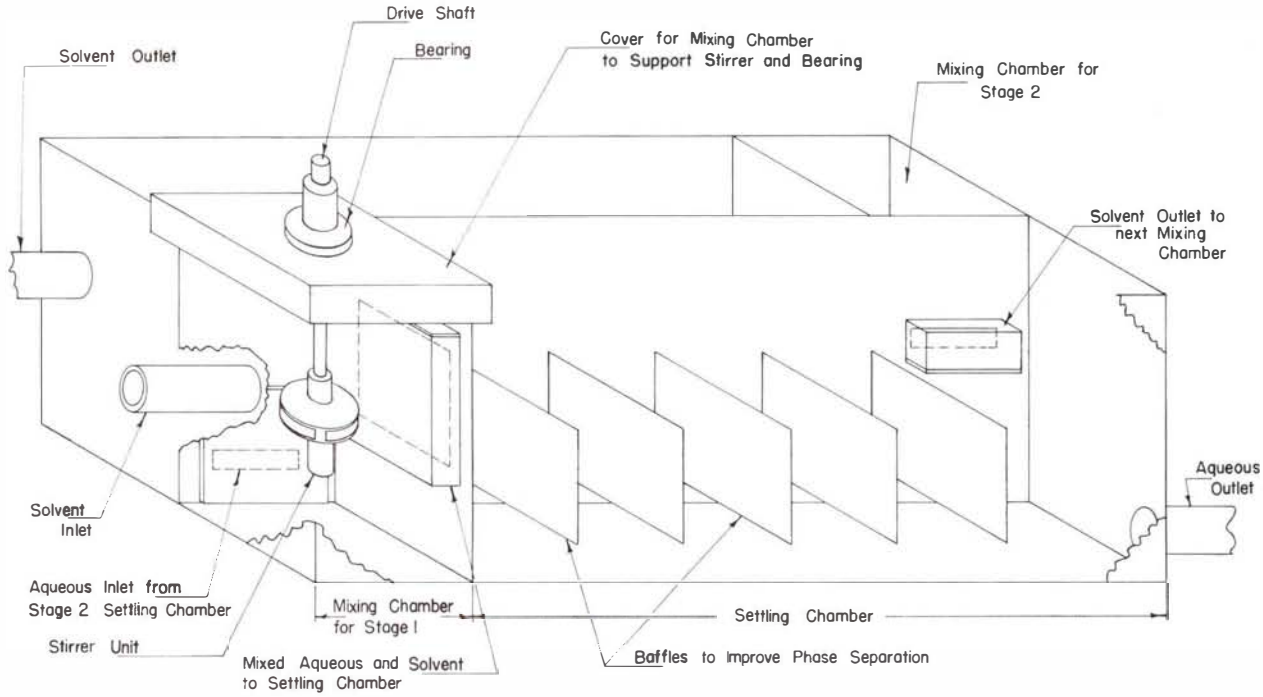


Fig. 66. Two-stage pump-mix unit.

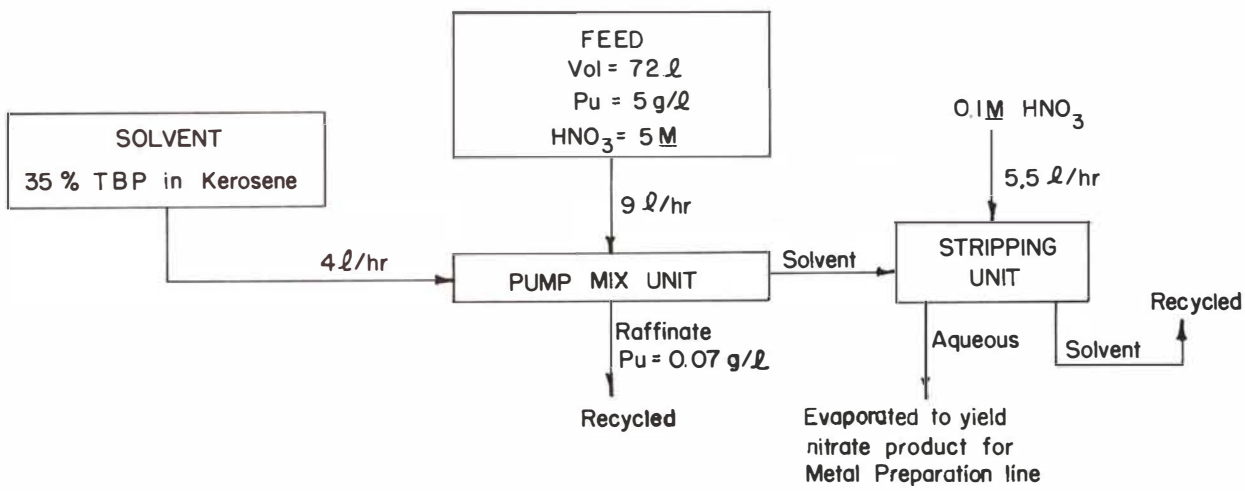


Fig. 67. Flow sheet for pump-mix solvent extraction unit used in 1952-1955.

with $NH_2OH{\cdot}HNO_3$. At the flow rates shown for solvent and strip solution, the strip solution contained from 10 to 20g of plutonium per liter as it was leaving the column. This solution was too dilute to serve as feed for the metal preparation system; hence, the plutonium was concentrated by the precipitation of the trivalent oxalate. After filtering, washing, and air-drying for 30 min, the cake was transferred to a pot furnace where the plutonium was converted to oxide by heating in a stream of air at 500°C for several hours. The resulting oxide was dissolved in $10M$ $HNO_3$-$0.05M$ HF to form a concentrated feed. ~400 g of plutonium in 900 ml of solution, for the metal preparation system. This method had the advantage of giving an additional purification, especially from iron and aluminum, whereas evaporation of the strip solution would merely concentrate the im-

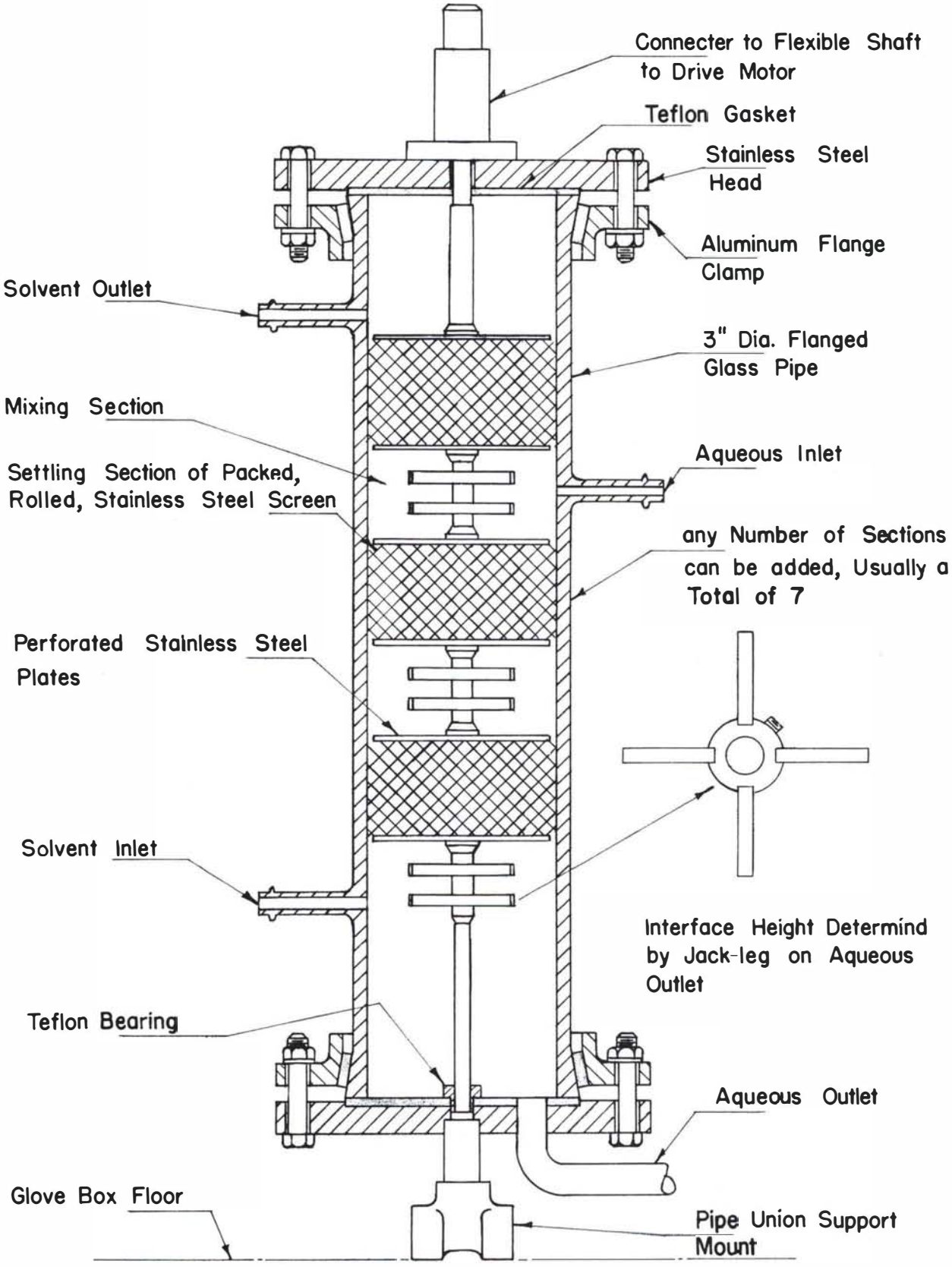


Fig. 68. York Scheibel mixer-settler extraction column.

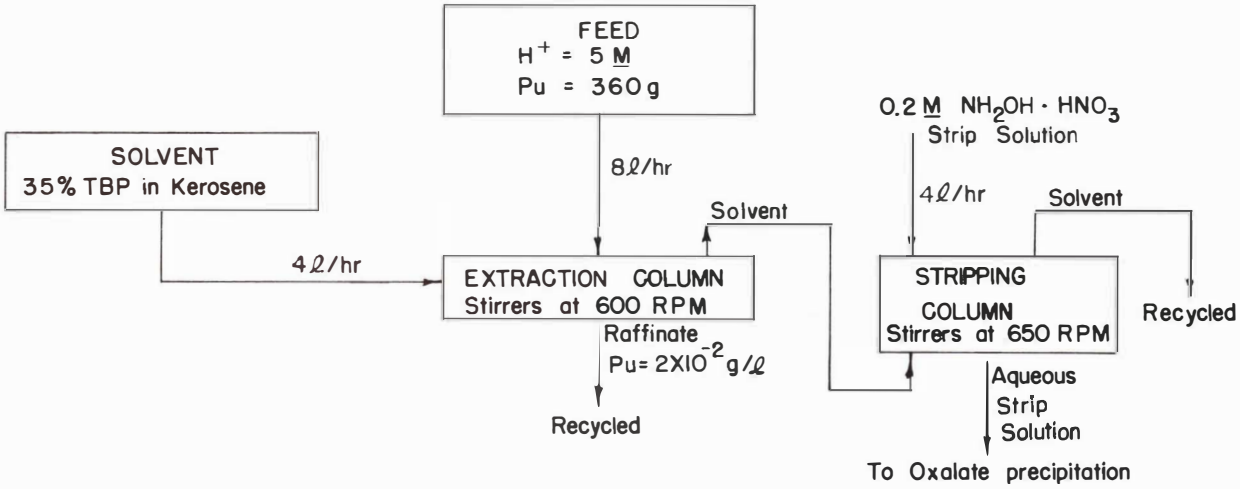


Fig. 69. Flow sheet for mixer-settler column.

| ELEMENT | DECONTAMINATION FACTOR |
|---|---|
| Ni | $>5 \times 10^4$ |
| Fe | $7 \times 10^4$ |
| Cu | $>5 \times 10^3$ |
| Cr | $6 \times 10^4$ |
| Ce | $6 \times 10^3$ |
| Th | 3.2 |
| Zr | 39 |
| U | 0.6 |

Fig. 70. Decontamination factors obtained upon extraction of plutonium in six-stage mixer-settler column.

purities. The solvent was recycled in this system with periodic NaOH scrubs to remove any dissolved degradation products.

## 8.9.5 Other Solvents

Plant systems using TBP as extractant were usually unable to give complete separation of plutonium and all other elements. One of the elements that tended to follow along with the plutonium was zirconium. Other extractants, such as tri-n-octylamine, Primene JMT, Armeen 2-12, 9D-178, tri-lauryl amine, and Amberlite LA-1, were investigated by Winchester[111, 112] for the separation of plutonium and zirconium. He found that Amberlite LA-1 was satisfactory for the separation and that by adding 10% n-decyl alcohol this secondary amine could be used to extract the plutonium from concentrated solutions without fear of third-phase formation. This method was used for several years for the plutonium-zirconium separation, being replaced only when the ion-exchange technology had advanced to the state where an ion-exchange resin under proper conditions would give the desired product purity.

Other solvents have been used, such as thenoyl tri-fluoroacetone, but none seemed to offer the process conditions that were deemed desirable for processing plutonium at Los Alamos.

## 8.9.6 Solution Storage

In all of the processes discussed in this report, the solutions are treated in 6-in.-diam glass tanks and stored in 6-in.-diam stainless steel tanks as shown in Figs. 73 and 74, respectively. The stainless steel tanks are standard 6 in., IPS type 304, schedule 10 pipe equipped with see-through sight pads on each end of the horizontal tanks and on the sides of the vertically mounted tanks. These tanks in our installation are geometrically favorable to >500 g plutonium per liter.[113] The movement of any plutonium material is documented on a computer program that gives the location, volume or bulk weight, the plutonium content, the type of material, and the location for each container or batch of material in the plant.[114]

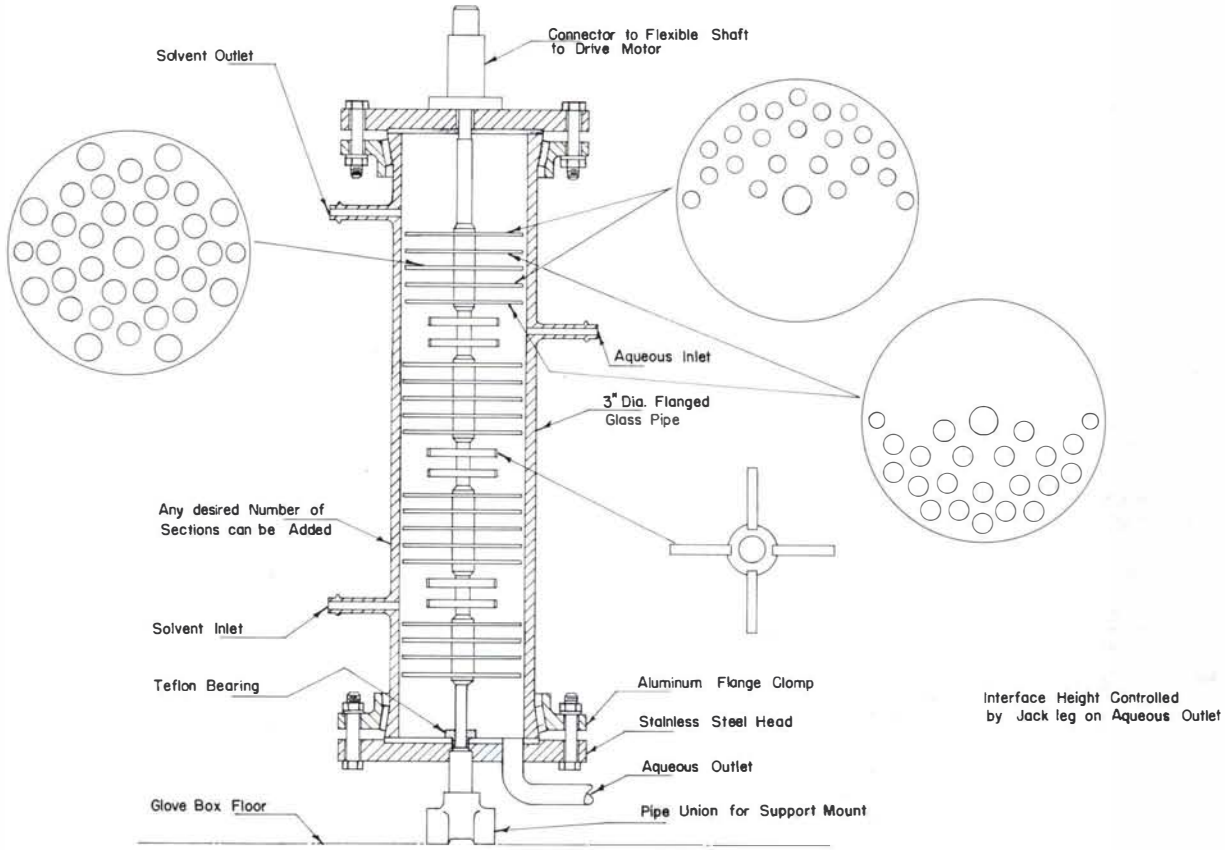


Fig. 71. Mixer-settler column with Teflon disks in settling sections.

| ELMENT | CONCENTRATION in PPm, based on Pu |
|---|---|
| Be | < 0.1 |
| Mg | < 10 |
| Aℓ | 160 |
| Si | < 10 |
| Ca | 250 |
| Cr | 25 |
| Mn | 2 |
| Fe | 60 |
| Co | < 10 |
| Cu | 20 |
| Ni | 30 |
| Zn | < 10 |
| Zr | < 15 |
| Mo | < 25 |
| Ru | < 25 |
| Sn | 10 |
| La | < 15 |
| Ce | < 100 |
| Pb | 2 |
| Bi | 25 |
| Am | 4 |

Fig. 72. Average concentration of impurities in the final nitrate product.

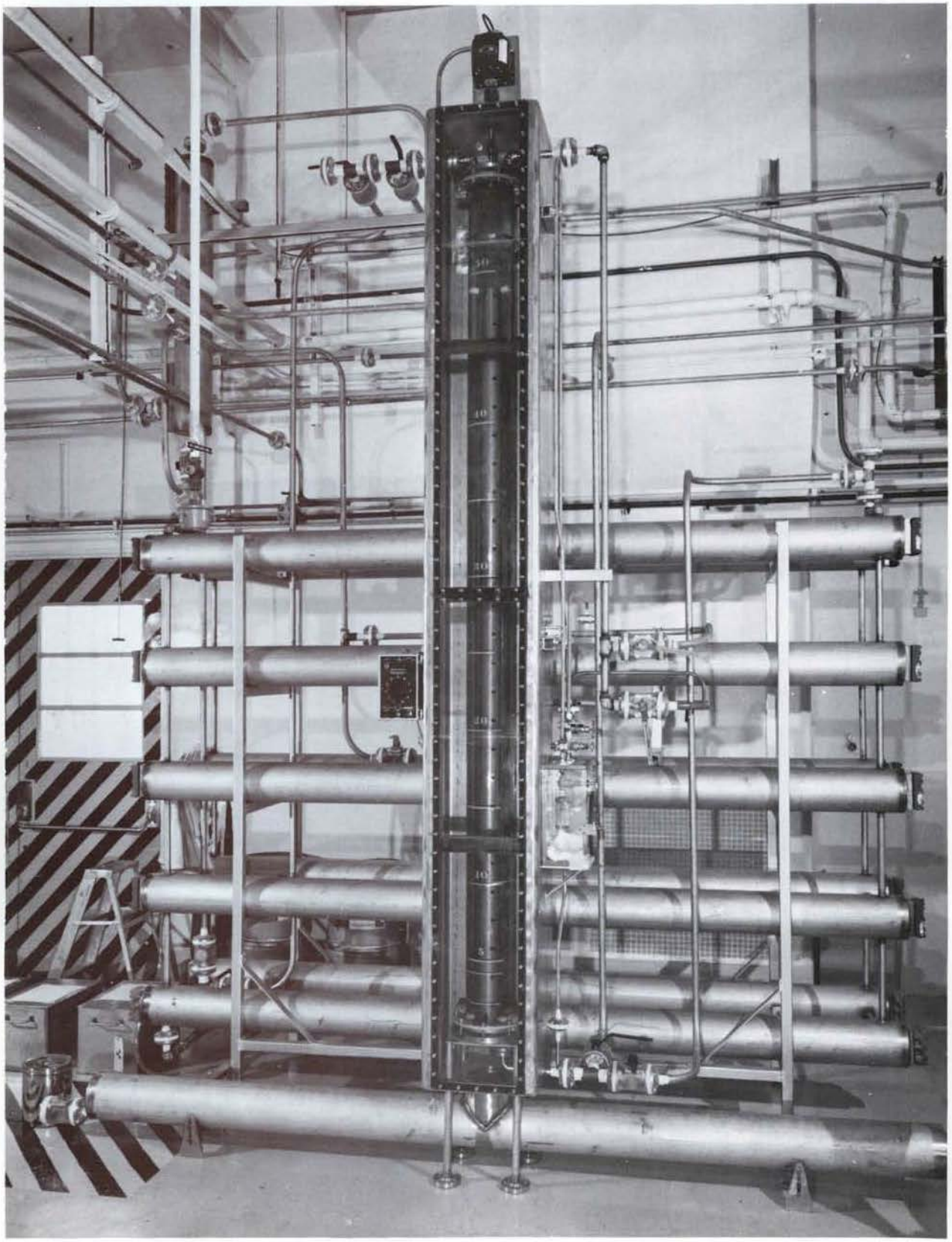

Fig. 73. View of current feed treating tank.

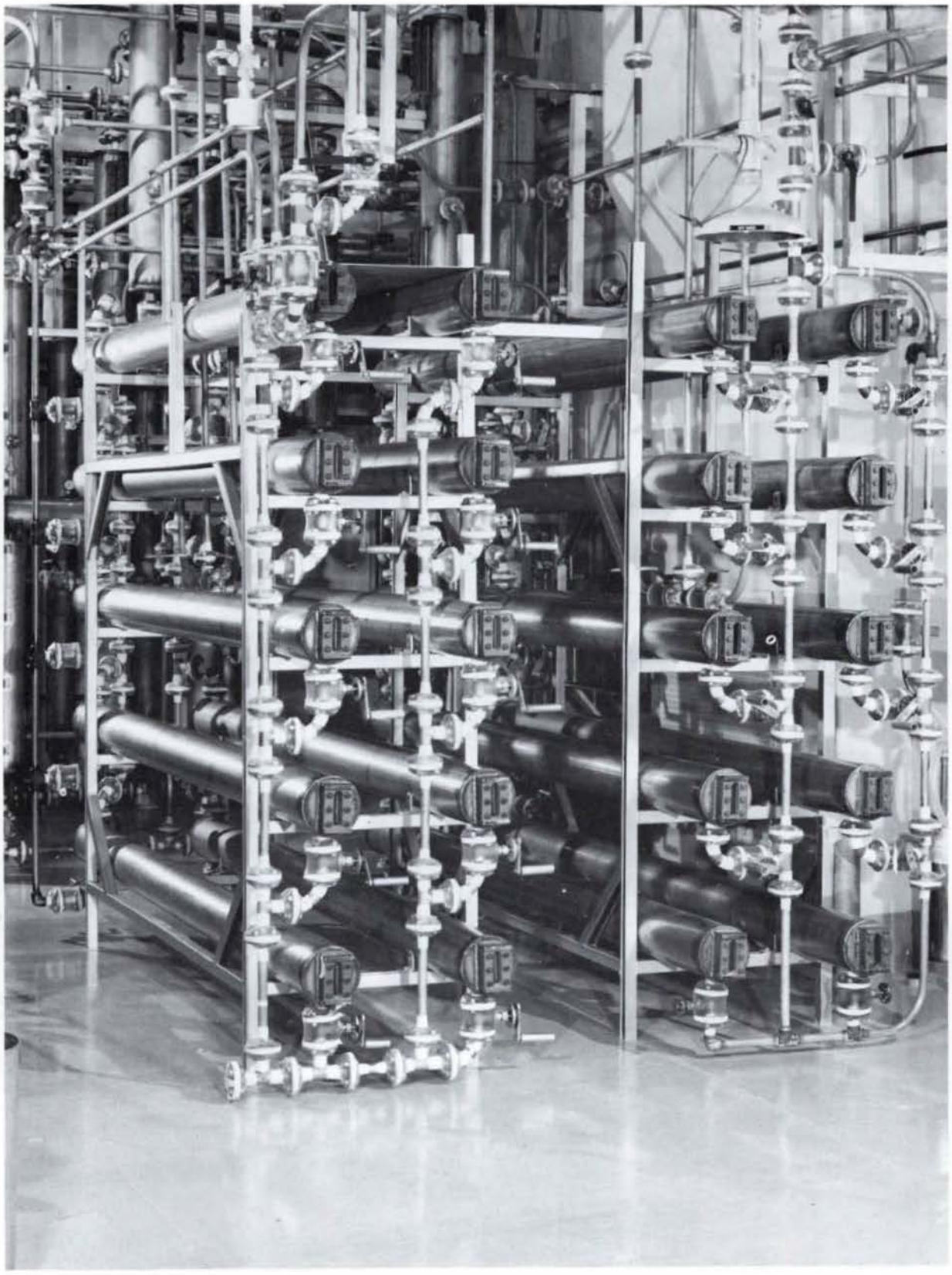

Fig. 74. View of typical solution storage tanks.

## REFERENCES


1. J. B. Gergen, N. L. Brown, D. E. Carritt, C. E. Hagen, W. W. Lowe, D. F. Mastick, Elizabeth Maxwell, and A. C. Wahl, "Chemical Research, Building D Plutonium Purification." LA-404. Los Alamos Scientific Laboratory (1946).

2. A. C. Wahl, "Plutonium Purification in Building D," LA-403, Los Alamos Scientific Laboratory (1946).

3. A. C. Wahl, D. F. Mastick, and F. K. Pittman, "Purification of Plutonium," LA-75. Los Alamos Scientific Laboratory (1944).

4. R. D. Baker, J. E. Burke, R. B. Duffield, and M. Kolodney, "Description of Plant for Final Processing of Plutonium," LAMS-317, Los Alamos Scientific Laboratory (no date given).

5. F. K. Pittman, W. A. Brown, D. Duffy, G. B. Fleming, W. B. Gibson, B. L. Kelchner, R. Schaffer, and D. L. Wolfe, "Recovery and Purification of Plutonium," LA-141, Los Alamos Scientific Laboratory (1944).

6. F. K. Pittman, "Plutonium Recovery Methods," LA-192, Los Alamos Scientific Laboratory (1944).

7. F. K. Pittman, W. A. Brown, D. Duffy, G. B. Fleming, W. B. Gibson, B. L. Kelchner, R. Schaffer, and D. L. Wolfe, "Plutonium Recovery Methods," LA-175, Los Alamos Scientific Laboratory (1944).

8. D. E. Carritt, C. E. Hagen, and A. C. Wahl, "Purification Processes. D-Building Plutonium Purification," LA-405. Los Alamos Scientific Laboratory (1946).

9. F. K. Pittman, Chapter 5. "Chemistry of the Recovery of Plutonium," in "Chemistry of Uranium and Plutonium," LA-1100, Los Alamos Scientific Laboratory (1947).

10. D. Duffy, G. B. Fleming, C. S. Garner, and D. L. Wolfe, "Building D Plutonium Recovery Processes," LA-443. Los Alamos Scientific Laboratory (1945).

11. W. H. Langham, A. Murray III, and A. M. Perley, "Monitoring of Certain Personnel for Internal Plutonium Contamination," LA-349, Los Alamos Scientific Laboratory (1945).

12. R. B. Duffield, Chapter 6. "Plant Processing of Plutonium," in "Chemistry of Uranium and Plutonium." LA-1100. Los Alamos Scientific Laboratory (1947).

13. W. J. Maraman. "Recent Developments in Facilities for Handling Intense Alpha Sources," Progress in Nuclear Energy. Series XII. Vol. 1 — Health Physics (1958).

14. E. L. Christensen. W. D. McNeese, and W. J. Maraman, "Decontamination Experience in the Design and Operation of the Plutonium Processing Facilities at Los Alamos," paper given at First International Symposium on the Decontamination of Nuclear Installations at Harwell. England (May 1966).

15. W. D. McNeese, Los Alamos Scientific Laboratory. private communication.

16. H. C. Paxton, R. D. Baker. W. J. Maraman. and Roy Reider. "Nuclear-Critical Accident at the Los Alamos Laboratory on December 30, 1958," LAMS-2293. Los Alamos Scientific Laboratory (1959).

17. J. B. Deal, Jr., Charles Pacheco, and E. A. Humphrey. "Gamma Radiation Detector and Warning System." LA-2490. Los Alamos Scientific Laboratory (1960).

18. Wright H. Langham, "Physiology and Toxicology of Plutonium-239," (LADC-3674). *In*: Hot Laboratories and Equipment Conference. 7th. Cleveland (1959). PROCEEDINGS. pp. 256-75.

19. E. L. Christensen, "Procedures for Decontamination of Plutonium from Various Surfaces," LAMS-2319. Los Alamos Scientific Laboratory (1959).

20. M. Kolodney. A. C. Dumrose, and H. N. Raich. LASL internal document (June 1. 1946).

21. W. W. Lowe and W. S. Magness, LASL internal document (August 25. 1947).

22. W. C. Pritchard and K. W. R. Johnson. LASL internal document (July 24. 1951).

23. C. W. Bjorklund. LASL internal documents (June 24, 1954).

24. W. D. McNeese. LASL internal document (February 1953).

25. W. D. McNeese. LASL internal document (July 1953).

26. W. D. McNeese. LASL internal document (November 1953).

27. W. D. McNeese, LASL internal document (December 1953).

28. R. L. Nance and E. L. Christensen. LASL internal document (1954).

29. W. C. Pritchard. R. L. Nance. M. Sprinkle, and K. W. J. Johnson. LASL internal document (May 1951).

30. R. L. Nance and E. L. Christensen. LASL internal document (June 1954).

31. C. E. Nordeen and W. C. Pritchard. LASL internal document (March 1952).

32. W. J. Maraman. LASL internal document (March 1953).

33. D. B. James and E. L. Christensen. "Recovery of Plutonium Metallurgical Scrap by Anion Exchange," a talk for the Meeting of the Nuclear Fuel Processing Committee of AIME in New York (February 1964).

34. D. B. James and R. S. Cooper. "Processing of Plutonium by Ion Exchange: IV. The Separation of Plutonium from Weakly Sorbed Impurities," LA-3040. Los Alamos Scientific Laboratory (1964).

35. Ivan K. Kressin and Glenn R. Waterbury. "The Quantitative Separation of Plutonium from Various Ions by Anion Exchange." Anal. Chem. **34**. 1958-1601 (1962).

36. J. R. Reavis. LASL internal document (1961).

37. J. W. Anderson. J. W. Romero. and J. A. Carter. Los Alamos Scientific Laboratory. private communication.

38. O. T. Roth. LASL internal documents (1947 and 1948).

39. R. L. Nance and E. L. Christensen. LASL internal documents (1954).

40. R. L. Nance. LASL internal document (1953).

41. C. W. Bjorklund. "Some Observations on the Reactivity of $PuO_2$." LA-1869. Los Alamos Scientific Laboratory (1954).

42. W. W. Lowe and W. S. Magness. LASL internal documents (1947).

43. K. W. R. Johnson. LASL internal documents (1951).

44. K. W. R. Johnson and W. C. Pritchard. LASL internal documents (1951).

45. D. F. Bowersox. Los Alamos Scientific Laboratory. private communication.

46. A. E. Ogard, Los Alamos Scientific Laboratory. private communication.

47. L. J. Mullins. J. A. Leary. and C. W. Bjorklund. "Large Scale Preparation of High Purity Plutonium Metal by Electrorefining (Preliminary Report)". LAMS-2441. Los Alamos Scientific Laboratory (1960).

48. L. J. Mullins, J. A. Leary. A. N. Morgan. and W. J. Maraman. "Plutonium Electrorefining," LA-2666. Los Alamos Scientific Laboratory (1962).

49. L. J. Mullins. J. A. Leary. and A. N. Morgan. "Operating Instructions. Procedures and Equipment for the Los Alamos Plutonium Electrorefining Plant." LA-2981. Los Alamos Scientific Laboratory (1963).

50. L. J. Mullins, J. A. Leary. and A. N. Morgan. "Large Scale Electrorefining of Plutonium from Pu-Fe Alloys." LA-3029. Los Alamos Scientific Laboratory (1963).

51. L. J. Mullins and J. A. Leary. "Fused Salt Electrorefining of Molten Plutonium and Its Alloys." LA-3118. Los Alamos Scientific Laboratory (1964).

52. R. D. Baker. M. Kolodney. E. Maxwell. and C. S. Smith. "Progress Report on Metal Reduction." LA-35. Los Alamos Scientific Laboratory (1943).

53. R. D. Baker, R. H. Dunlap. and M. Kolodney. "Progress Report on Metal Reduction," LA-40. Los Alamos Scientific Laboratory (1943).

54. R. D. Baker. R. H. Dunlap. and M. Kolodney. "Progress Report on Metal Reduction," LA-54. Los Alamos Scientific Laboratory (1944).

55. R. D. Baker and M. Kolodney. "Progress Report on Metal Reduction," LA-61. Los Alamos Scientific Laboratory (1944).

56. R. D. Baker, B. R. Hayward. C. Hull, H. Raich, and A. R. Weiss, "Preparation of Uraninum Metal by the Bomb Method," LA-472. Los Alamos Scientific Laboratory (1946).

57. R. D. Baker. "Preparation of Plutonium Metal by the Bomb Method." LA-473, Los Alamos Scientific Laboratory (1946).

58. E. Wichers, S. Beren, A. Bradshaw, W. E. Browning, T. Connolly, I. Davis, M. Harmon, B. Kelchner, D. Lasovick. E. Menker. S. Rand, and G. Wilkinson, "Recovery of Enriched Uranium from Reduction Residues." LA-537. Los Alamos Scientific Laboratory (1945).

59. W. J. Maraman, LASL internal documents (1946 and 1947).

60. W. J. Maraman. W. D. McNeese, L. J. Mullins, J. A. Hermann. R. S. Winchester. C. G. Delano. and J. Stahl. LASL internal documents (1950).

61. W. W. Lowe and W. S. Magness. LASL internal document (1947).

62. L. J. Mullins and R. S. Winchester, LASL internal document (1949).

63. L. J. Mullins. W. C. Hazen. A. V. Henrickson, and R. S. Winchester. LASL internal document (1950).

64. W. J. Maraman. LASL internal document (1952).

65. E. L. Christensen and R. L. Nance, LASL internal documents (1953 to 1956).

66. A. K. Williams. Rocky Flats Division of the Dow Chemical Co., Denver, Colo., private communication.

67. A. V. Henrickson. LASL internal documents (1950).

68. W. J. Maraman, Los Alamos Scientific Laboratory. private communication (1952).

69. W. J. Maraman and W. D. McNeese. LASL internal documents (1953).

70. E. L. Christensen, J. G. Carmichael. and W. J. Maraman. LASL internal documents (1954 to 1956).

71. R. D. Baker. LASL internal documents (1950).

72. E. L. Christensen and C. E. Nordeen, LASL internal documents (1961).

73. W. J. Maraman, LASL internal documents (1955 and 1956).

74. W. J. Maraman. LASL internal documents (1958 and 1959).

75. W. C. Pritchard and J. W. Anderson, "Use of Calcium Fluoride as a Coating for Pu Melt and Mold Crucibles." LA-2426, Los Alamos Scientific Laboratory (1960).

76. W. C. Pritchard and J. W. Anderson, "Use of Calcium Fluoride as a Coating for Plutonium Casting Molds," LA-2315. Los Alamos Scientific Laboratory (1959).

77. W. J. Maraman. LASL internal documents (1953).

78. W. J. Maraman and W. D. McNeese, LASL internal documents (1951).

79. W. D. McNeese. W. J. Maraman, and T. W. Chronister. "Incinerator for Radioactive Residue." LA-1691. Los Alamos Scientific Laboratory (1954).

80. W. D. McNeese and W. J. Maraman. "Incinerator for Radioactive Residue," Ind. Eng. Chem. **52**, 79-81 (1960).

81. J. L. Ryan and E. J. Wheelwright, "Recovery and Purification of Plutonium by Anion Exchange." Paper at 133rd National Meeting of the American Chemical Society. San Francisco (1958).

82. J. W. Pringle and A. K. Williams, Rocky Flats Division of the Dow Chemical Co., private communication (1958).

83. R. W. Durham and R. Mills. "The Absorption of Plutonium by Anion Resins, Part I: Equilibrium Studies." Atomic Energy of Canada. Ltd., Chalk River Project. CEI-62 (Sept. 29, 1953).

84. L. J. Mullins and George Rennex. LASL internal documents (1948).

85. L. J. Mullins, R. S. Winchester. J. A. Hermann, W. B. Gibson, and R. E. Smith. LASL internal documents (1949).

86. W. J. Maraman and R. S. Winchester, LASL internal documents (1956).

87. E. L. Christensen and R. L. Nance, LASL internal documents (1954).

88. W. J. Maraman, A. J. Beaumont. E. L. Christensen, A. V. Henrickson, J. A. Hermann, K. W. R. Johnson, L. J. Mullins, and R. S. Winchester, "Calcium Oxalate Carrier Precipitation of Plutonium," LA-1692. Los Alamos Scientific Laboratory (1954).

89. J. A. Leary, "Studies on the Preparation. Properties and Composition of Plutonium Peroxide," LA-1913. Los Alamos Scientific Laboratory (1954).

90. J. A. Leary, A. N. Morgan, and W. J. Maraman. "Plutonium Peroxide Precipitation." Ind. Eng. Chem. **51**, 27-31 (1959).

91. E. L. Christensen, LASL internal documents (1954).

92. D. B. James and E. L. Christensen, "The Processing of Plutonium by Ion Exchange: II. The Anion-Exchange Separation of Plutonium and Thorium," Trans. Am. Nucl. Soc. **5**, No. 2, 459 (1962).

93. E. L. Christensen and M. W. Shupe. LASL internal documents (1963 and 1964).

94. L. J. Mullins. "Removal of Iron from Plutonium Solution by Basic Acetate Precipitation." LA-1139, Los Alamos Scientific Laboratory (1950).

95. L. J. Mullins and J. P. Nigon. LASL internal documents (1947).

96. L. J. Mullins and George Rennex. LASL internal documents (1948).

97. W. J. Maraman. L. J. Mullins. and J. A. Hermann. LASL internal documents (1950).

98. E. L. Christensen and W. F. Mohr, LASL internal documents (1960).

99. D. B. James, "The Processing of Plutonium by Ion-Exchange: I. The Concentration Dependence of Distribution Coefficients on Dowex 1 × 4 from *7M* Nitric Acid." J. Inorg. Nucl. Chem. **25**, 711-718 (1963).

100. D. B. James. "The Synergistic Effect of Thorium on the Distribution Coefficients of Several Elements with Anion-Exchange Resin from *7M* Nitric Acid," LA-2836, Los Alamos Scientific Laboratory (1963).

101. D. B. James and R. S. Cooper. "Processing of Plutonium by Ion Exchange: III. The Calculation of Fixed-Bed Column Performance." LA-2838. Los Alamos Scientific Laboratory (1964).

102. D. B. James. "The Processing of Plutonium by Ion Exchange: V. Equilibrium Anion-Exchange Sorption from Mixed Nitric Acid-Aluminum Nitrate Solvents," LA-3188. Los Alamos Scientific Laboratory (1964).

103. D. B. James. "Processing of Plutonium by Ion Exchange: VI. Plutonium (IV) Sorption Kinetics on Dowex 1 × 4 from Nitrate Solutions," Nuclear Applications. v. 2. pp. 379-89 (1966) LA-DC-7066.

104. D. B. James. "Processing of Plutonium by Ion Exchange: VII. Plutonium (IV) Desorption Kinetics from Dowex 1 × 4 into Nitric Acid Solutions," LA-3357, Los Alamos Scientific Laboratory (1965).

105. E. J. Wheelwright. "Anion Exchange Recovery of Plutonium from the Hanford 234-5 Building Button Line: Task I. Oxalate Filtrate." HW-75309. Hanford. Washington (1962).

106. L. R. Bunney, N. E. Ballou, J. Pascual, and S. Foti. "Anion-Exchange Behavior of Several Metals Ions in HCl. $HNO_3$ and $H_2SO_4$ Solutions. with Dowex-2." NRDL-TR-228. (1958). Naval Radiological Defense Laboratory. San Francisco.

107. W. W. Lowe. LASL internal documents (1947).

108. W. B. Lanham and T. C. Rusion. "Purex Process for Plutonium and Uranium Recovery." ORNL-479. Oak Ridge National Laboratory (1949).

109. K. A. Walsh and E. L. Christensen, LASL internal documents (1953).

110. K. A. Walsh, "Extraction of Americium Nitrate with Tributyl Phosphate," LA-1861, Los Alamos Scientific Laboratory (1955).

111. R. S. Winchester, "Aqueous Decontamination of Plutonium from Fission Product Elements," LA-2170, Los Alamos Scientific Laboratory (1957).

112. R. S. Winchester, LASL internal documents (1954).

113. D. R. Smith, Los Alamos Scientific Laboratory, private communication.

114. E. L. Christensen, J. A. Leary, J. P. Devine, and W. J. Maraman, "A Punched-Card Machine Method for Management of Nuclear Materials," LA-2662, Los Alamos Scientific Laboratory (1962).

# ENCLOSURE 2

Plutonium Recovery at the Los Alamos Scientific Laboratory

ENV-DO-15-0075

LA-UR-80-1168

Date: MAR 1 9 2015

LA-UR -80-1168

CONF 8006 11-5

TITLE: PLUTONIUM RECOVERY AT THE LOS ALAMOS SCIENTIFIC LABORATORY

AUTHOR(S): Eldon L. Christensen

NOTICE
PORTIONS OF THIS REPORT ARE ILLEGIBLE.
It has been reproduced from the best available copy to permit the broadest possible availability.

SUBMITTED TO: Symposium on the Management of Alpha-Contaminated Wastes, Vienna, Austria, June 2-6, 1980

MASTER

University of California

By acceptance of this article, the publisher recognizes that the U.S. Government retains a nonexclusive, royalty-free license to publish or reproduce the published form of this contribution, or to allow others to do so, for U.S. Government purposes.

The Los Alamos Scientific Laboratory requests that the publisher identify this article as work performed under the auspices of the U.S. Department of Energy

LOS ALAMOS SCIENTIFIC LABORATORY
Post Office Box 1663 Los Alamos, New Mexico 87545
An Affirmative Action/Equal Opportunity Employer

DISTRIBUTION OF THIS DOCUMENT IS UNLIMITED

Form No. 836 R3
St. No. 2629
12/78

UNITED STATES
DEPARTMENT OF ENERGY
CONTRACT W-7405-ENG. 36

IAEA-SM-246/32

# PLUTONIUM RECOVERY AT THE LOS ALAMOS SCIENTIFIC LABORATORY

By Eldon L. Christensen

Los Alamos Scientific Laboratory, University of California

Approved Abstract LASL # LA-UR-79-3115

Approved Paper LASL # LA-UR-80-

April 1980

# PLUTONIUM RECOVERY AT THE LOS ALAMOS SCIENTIFIC LABORATORY

Eldon L. Christensen
Los Alamos Scientific Laboratory, University of California

## ABSTRACT

Plutonium-bearing residues created in the many research and development programs at the Los Alamos Scientific Laboratory are extremely varied in type of contaminant as well as in the nature of residue. The recovery and purification of the plutonium in these residues requires, therefore, the use of a number of processes.

Research programs have led to the adoption of procedures for all phases of plutonium recovery and purification. This report discusses some of the many procedures required to recover and purify the plutonium contained in the residues generated by the research, process development, and production activities of the Los Alamos Scientific Laboratory. The report also discusses general plant facilities, the liquid and gaseous effluents, and solid waste management practices at the New Plutonium Facility, TA-55.

Many of the processes or operations are merely steps in preparing the feed for one of the purification systems. For example, the plutonium is currently removed from noncombustibles in the pickling operation with an $HNO_3$ leach. The $HNO_3$ leach solution is the product of this operation and is sent to one of the nitrate anion-exchange systems for concentration and purification.

The experimental work which led to the selection of specific operating conditions is described in LASL reports and documents listed in the bibliography.

# PLUTONIUM RECOVERY AT THE LOS ALAMOS SCIENTIFIC LABORATORY

## INTRODUCTION

Plutonium residues have been processed at Los Alamos since 1943. The first large scale processing was done in facilities built on DP Mesa in 1944-45. These facilities and the early flowsheets are described in LA-3542.[18] In 1969 we decided to design and build new facilities incorporating the latest technology. We selected a site on another mesa that has now been designated as Technical Area 55 (TA-55), and the facility has been give the name of Plutonium Facility (PF). An aerial view of the completed facility is given as Figure 1.

The site consists of twenty-one acres within the boundaries of the Los Alamos Scientific Laboratory (LASL). This location was chosen because of its isolation from population centers and its proximity to existing liquid waste treatment facilities.

## FACILITY CRITERIA

The facility was constructed in accordance with the criteria published in the Department of Energy document ERDAM 6301. This document has criteria for site, building, and equipment construction as well as operation. These criteria cover earthquake, tornado, wind, fire, ventilation, radiation exposure, liquid and gaseous effluents, and solid wastes.

The facility is composed of several buildings in support of the process building. The support buildings do not contain plutonium and are designed only to the Uniform Building Code for commercial buildings. The process building, designated PF-4, along with the Control Room and the emergency generator building, are the only ones designed to the special criteria that will be discussed here.

SEISMIC

The major geologic features of the Los Alamos area are the Jemez Mountains to the west, the plateau area that has been cut into flat-topped land areas called mesas, and the Rio Grande Valley to the east. The plateau area is volcanic ash from the volcanoes that formed the Jemez Mountains. There is no geologic evidence that intensive earthquakes have occurred within the recent geologic history. PF-4 was designed, based on intensive studies of the site, to withstand horizontal ground motions of 0.17 g for the Operating Base Earthquake (OBE) and 0.33 g for the Safe Shutdown Earthquake (SSE).

WIND AND TORNADO

PF-4 was designed to withstand the forces induced by the Design Basis Tornado as defined in ERDAM 6301. This includes a 200 mph (96 m/s) wind, a tornado propelled light weight, high-velocity missile for penetration, and a massive, low-velocity missile for crushing effect. A section of a wall similar to that of the PF-4 walls was tested at the Sandia Laboratory in Albuquerque, and the tests confirmed design calculations. The penetration test at Sandia was done with a board that was 2 inches by 12 inches and 12 feet long on a rocket sled. The sled reached a velocity of about 160 miles an hour, and the wall made sawdust out of the board.

FIRE

The exterior walls, roof, and floor elements of PF-4 provide at least 4-hour fire resistance. The building and all components therein were constructed with a minimum of combustible material. Inside PF-4,

work areas of less than 40,000 square feet were created by construction of 4-hour fire walls. The combustible loading in the work areas, both in and out of the gloveboxes, is kept to an absolute minimum, so much so that it was difficult to find a combustible loading on which to do the safety analysis. The buildings are equipped with sprinkler systems as added protection.

## RADIATION PROTECTION

The plutonium work in PF-4 is done mainly in gloveboxes. In order to achieve the design criteria of 1 rem per year per worker, the boxes were spaced seven feet apart to minimize "cross-talk" between boxes. In addition, each process was studied to determine the type and amount of shielding necessary to hold the radiation exposure to less than 1 rem per year per worker. Therefore, all gloveboxes are of a "sandwich" construction, 3/16 inch thick stainless steel followed by 1/4 inch thick lead and 1/16 inch thick stainless steel. In certain areas, 4 inches of hydrogenous shielding was added to reduce neutron radiation exposures of the workers.

## VENTILATION

The air handling in PF-4 is divided into 4 systems so that air moves from the outside to corridors, to rooms, and then to gloveboxes following the principle of air going from least contaminated area to most contaminated area.

Room air is recirculated after passing through a roughing filter and and 2 HEPA (High Efficiency Particulate Aerosols) filter stages in series. Ten percent of the recirculated air is discharged to the atmosphere through

another 2 HEPA filters. The air concentration of plutonium at the stack is less than 0.009 percent of the MPC for the air concentration values as listed in DOEM 0524 Annex A, Table II, Column I, for soluble plutonium. The concentration at the site boundary is several orders of magnitude lower.

Process air is recirculated to gloveboxes with non-aqueous processing after being passed through 3 stages of HEPA filters. The air from gloveboxes containing aqueous processes is discharged to the atmosphere after passing through 3 stages of HEPA filters. Each of the 4 process wings has its own process air ventilation system. The air is sampled continuously and found to average less than 0.009 percent of MPC.

The other 2 air handling systems involve the air that is supplied to the plant via plant corridors and the air in the basement area surrounding the other air handling systems.

LIQUID EFFLUENTS

The TA-55 plant has 4 independent liquid discharge systems. Each of them is monitored for radioactive material content.

The sanitary wastes are collected by a network of small lines that lead to the large line that serves only this site. This line is monitored by a gamma system to detect a plutonium release of 0.1 gram.

The industrial waste line collects the waste from janitor's mop sinks, decontamination showers, circulating water overflows and drainings, and sinks in laboratories that do not handle radioactive materials. The collector lines lead to a main line that is monitored by a gamma system to detect a plutonium concentration of 0.01 mg/ℓ. The data collected during the first 2 years of operation have shown that this waste solution has an average concentration of much less than 0.001 mg/ℓ.

This solution goes to a waste treatment plant where it is treated to reduce the alpha contamination to 200 d/m/ℓ.

The other two liquid discharge streams are called process waste acid and process waste caustic. These are process solutions that are collected and sampled before discharging to the waste treatment plant via dedicated lines.

The process waste caustic solutions come from hydroxide scavenging of Pu and Am from solutions that are not compatible with the high nitric acid systems in the plant and the stainless steel equipment in the plant. The chemistry of the processes will be discussed later.

The process waste acid solutions are generated as vacuum seal water, various scrub solutions, low-acid distillate from the acid recycle evaporators, and other low Pu-acid solutions. These processes are discussed later in this report.

## SOLID WASTES

Solid wastes are collected, segregated, measured for Pu content with various non-destructive assay instruments, and classified into 3 categories.

A Multi-Energy Gamma Assay System (MEGAS) has been developed at LASL to measure the plutonium content of low-density wastes. In general, these are room generated wastes. This instrument is presently being used to determine if the waste contains less than 10 nCi Pu/g. We have determined that this instrument can quantitatively measure 1 nCi Pu/g or about 0.14 mg of Pu that is 6 percent $^{240}Pu$.

Thermal Neutron Coincident (TNC) counters and Segmented Gamma Assay (SGS) instruments are used for measuring the plutonium content of mate-

rials that have a high density or that have a plutonium content greater than 10 nCi/g. In general, these are wastes and residues that have been generated inside the gloveboxes.

Wastes that contain less than 10 nCi Pu/g can be packaged in cardboard boxes and sent to land-fill burial. If we could not measure the plutonium content at this level, then all solid wastes would have to be packaged for placement in 20-year retrievable storage. Packaging for placement in 20-year retrievable storage is much more stringent and costly in terms of both storage space and cost of containers. These containers usually consist of a heavy wall plastic liner inside of a 200 liter steel drum. These drums are placed in controlled areas that are prepared so that the drum can be retrieved 20 years later with the external surface still free of contamination.

Wastes with a recoverable amount of plutonium are sent to the appropriate recovery process as shown in Figure 3.

## PROCESS BUILDING

The process building is called PF-4. A line drawing of this building is given as Figure 2. Each of the 4 process areas is served by an overhead conveyor that connects each glovebox line to one another and to the material management room at the end of each wing. These material management rooms are connected by a conveyor, thus making it possible to transfer items from one process area to another without doing bag-out operations, and this reduces the quantity of waste generated.

The gloveboxes and equipment are designed to provide surfaces that are accessible and easy to decontaminate. It is our design philosophy to install multiple, small process units rather than one large unit that is hard to decontaminate.

PROCESSING

The residues that contain an economically recoverable amount of plutonium are processed according to the flowsheet shown in Figure 3. The basic plan is to get the residues to a physical state that is amenable to safe, efficient acid leaching or dissolution giving a solution that contains nearly all of the radioactive material. The Pu in these solutions can then be recovered and purified by 3 methods, either alone or in combination; solvent extraction, ion exchange, and precipitation. We want to recover as much plutonium as possible with a minimum of effort while generating the least amount of residues that would have to be treated, stored, or discarded.

For example, all of our process rags are burned in an incinerator at a low temperature to produce an ash that can be dissolved in $HNO_3$ - $CaF_2$ according to the process shown in Figure 4. The resulting solution is transferred to an ion-exchange system where the plutonium is concentrated and purified using the procedure shown in Figure 5.

The effluents from the ion exchange columns are 7 M $HNO_3$ and contain from 1 to 10 mg Pu per liter and a large quantity of nitrate salts. In the past these solution were neutralized, mixed with cement, and the slurry placed in galvanized containers which could be placed in retrievable storage when the slurry solidified. When our new plutonium facility was under design, we decided that this process should be replaced. Therefore, we designed and installed thermo-siphon evaporators that would remove the acid, concentrate the nitrate salts, and prepare the acid distillate for re-use.

The flowsheet for this process is given in Figure 6. Evaporator number one distills about 95 percent of the anion exchange effluent. The

bottoms from evaporator number one are drained, while thermally hot, into a slab tank and allowed to cool. As the bottoms cool, nitrate salts are formed, mainly Ca, Mg, and Al, and these salts contain less than one percent of the radioactivity in the original effluent. The nitrate salts make up about half of the volume of the cooled bottoms. The other half is a clear supernatant that contains some nitrate salts and greater than 99 percent of the radioactive material. The nitrate salts that are present prevent efficient recovery of the plutonium and americium by ion exchange. We are installing solvent extraction equipment using di-Butyl-Butyl-Phosphonate in kerosene to extract the Pu and Am and leave the Fe and Pb in the raffinate. In the meantime, we are neutralizing the supernatant with NaOH until the Pu, Am, and Fe precipitate as hydroxides. After filtering, the hydroxide cake is mixed with cement and prepared for packaging and storing as retrievable waste. The hydroxide filtrate contains less than 1 mg/ℓ total alpha activity, and this solution is transferred to the waste treatment plant via the dedicated process waste caustic line.

The distillate from evaporator number one is fed to evaporator number two where water and some acid can be removed by distillation leaving the bottoms 10 M in $HNO_3$. The distillation is continued until a spot sample of the evaporator two distillate is found to be 4 M $H^+$ by titration with NaOH. Experiments have shown that when the distillate reaches 4 M in $H^+$, the bottoms will be ~ 10 M in $H^+$. The 10 M $HNO_3$ is placed in tanks that are piped to each glovebox in the recovery facility so that the acid can be re-used. The distillate from evaporator number two has averaged 3 M $H^+$ and less than 0.1 mg/ℓ total alpha activity. This distillate is transferred to the waste treatment facility via the dedicated process waste acid line.

Other residues that require treatment before the plutonium can be sent to plant processes include chloride solutions and chloride melts.

The chloride solutions that are generated in various metal pickling operations or in certain analytical procedures are processed with a ferric hydroxide carrier precipitation. The flowsheet for this process is shown as Figure 7. The hydroxide cake is dissolved in $HNO_3$ - HF (see Figure 8) and sent to an anion exchange system for recovery of the plutonium. The chlorides are discarded in the caustic solution via the dedicated process waste caustic line.

The chloride melt from the purification of plutonium metal by electrorefining contains a recoverable amount of plutonium. This melt can be dissolved in dilute HCl or $HNO_3$, but the resulting solution is not compatible with stainless steel equipment, especially items such as evaporators Therefore, such solutions should go to a hydroxide precipitation system as was previously discussed. That process will separate the plutonium and americium from the chloride, but doing it that way generates much more liquid waste than dissolving the chloride melt directly in KOH or NaOH. The halides dissolve while the plutonium and americium precipitate as the hydroxides.

Filtration then yields a small volume of caustic filtrate to be sent to final waste treatment. The hydroxide cake is dissolved in $HNO_3$ - HF to give a feed solution suitable for purification by ion exchange in glass and stainless steel equipment.

Another class of residue that requires special head-end treatment is the plutonium-beryllium neutron source. The sources have neutron radiation levels in the $10^6$ - $10^7$ n/s range. These must be processed behind special shielding until the plutonium and beryllium are separated. The

process must remove the beryllium and keep it separated from the plutonium until the beryllium can be discarded. The process developed for this purpose is shown in Figure 9.

Processes for other residues have been discussed in a document "Plutonium Processing at the Los Alamos Scientific Laboratory."[18]

## SUMMARY

The Plutonium Facility, its equipment and processes, have been designed to recover as much plutonium as possible while minimizing radiation exposure to the workers.

The plant and its processes have also been designed to minimize the generation of liquid and solid wastes that require further treatment before disposal or retrievable storage. The use of conveyors to transfer material between process units and the recycle of nitric acid are major components in this program.

Further reduction in radiation exposures and amount of wastes generated are being sought in development programs.

BIBLIOGRAPHY

1. F. K. Pittman, W. A. Brown, D. Duffy, G. B. Fleming, W. B. Gibson, B. L. Kelchner, R. Schaffer, and D. L. Wolfe, "Recovery and Purification of Plutonium," LA-141, Los Alamos Scientific Laboratory (1944).

2. F. K. Pittman, "Plutonium Recovery Methods," LA-192, Los Alamos Scientific Laboratory (1944).

3. F. K. Pittman, W. A. Brown, D. Duffy, G. B. Fleming, W. B. Gibson, B. L. Kelchner, R. Schaffer, and D. L. Wolfe, "Plutonium Recovery Methods," LA-175, Los Alamos Scientific Laboratory (1944).

4. F. K. Pittman, Chapter 5, "Chemistry of the Recovery of Plutonium," in "Chemistry of Uranium and Plutonium," LA-1100, Los Alamos Scientific Laboratory (1947).

5. D. Duffy, G. B. Fleming, C. S. Garner, and D. L. Wolfe, "Building D Plutonium Recovery Processes," LA-443, Los Alamos Scientific Laboratory (1945).

6. R. B. Duffield, Chapter 6, "Plant Processing of Plutonium," in "Chemistry of Uranium and Plutonium," LA-1100, Los Alamos Scientific Laboratory (1947).

7. E. L. Christensen, W. D. McNeese, and W. J. Maraman, "Decontamination Experience in the Design and Operation of the Plutonium Processing Facilities at Los Alamos," paper given at First International Symposium on the Decontamination of Nuclear Installations at Harwell, England (May 1966).

8. D. B. James and E. L. Christensen, "Recovery of Plutonium Metallurgical Scrap by Anion Exchange," a talk for the Meeting of the Nuclear Fuel Processing Committee of AIME in New York (February 1964).

9. D. B. James and R. S. Cooper, "Processing of Plutonium by Ion Exchange: IV. The Separation of Plutonium from Weakly Sorbed Impurities," LA-3040, Los Alamos Scientific Laboratory (1964).

10. I. K. Kressin and G. R. Waterbury, "The Quantitative Separation of Plutonium from Various Ions by Anion Exchange," Anal. Chem. 34, 1958 - 1601 (1962).

11. L. J. Mullins, J. A. Leary, and C. W. Bjorklund, "Large Scale Preparation of High Purity Plutonium Metal by Electrorefining (Preliminary Report)," LAMS-2441, Los Alamos Scientific Laboratory (1960).

12. L. J. Mullins, J. A. Leary, A. N. Morgan, and W. J. Maraman, "Plutonium Electrorefining," LA-2666, Los Alamos Scientific Laboratory (1963).

13. L. J. Mullins, J. A. Leary, and A. N. Morgan, "Operating Instructions, Procedures, and Equipment for the Los Alamos Plutonium Electrorefining Plant," LA-2981, Los Alamos Scientific Laboratory (1963).

14. L. J. Mullins, J. A. Leary, and A. N. Morgan, "Large Scale Electrorefining of Plutonium from Pu - Fe Alloys," LA-3029, Los Alamos Scientific Laboratory (1963).

15. L. J. Mullins and J. A. Leary, "Fused Salt Electrorefining of Molten Plutonium and Its Alloys," LA-3118, Los Alamos Scientific Laboratory (1964).

16. W. J. Maraman, A. J. Beaumont, E. L. Christensen, A. V. Henrickson, J. A. Hermann, K. W. R. Johnson, L. J. Mullins, and R. S. Winchester, "Calcium Oxalate Carrier Precipitation of Plutonium," LA-1692, Los Alamos Scientific Laboratory (1954).

17. D. B. James and E. L. Christensen, "The Processing of Plutonium by Ion Exchange: II. The Anion-Exchange Separation of Plutonium and Thorium," Trans. Am. Nucl. Soc. 5, No. 2, 459 (1962).

18. E. L. Christensen and W. J. Maraman, "Plutonium Processing at the Los Alamos Scientific Laboratory," LA-3542, Los Alamos Scientific Laboratory (1969).

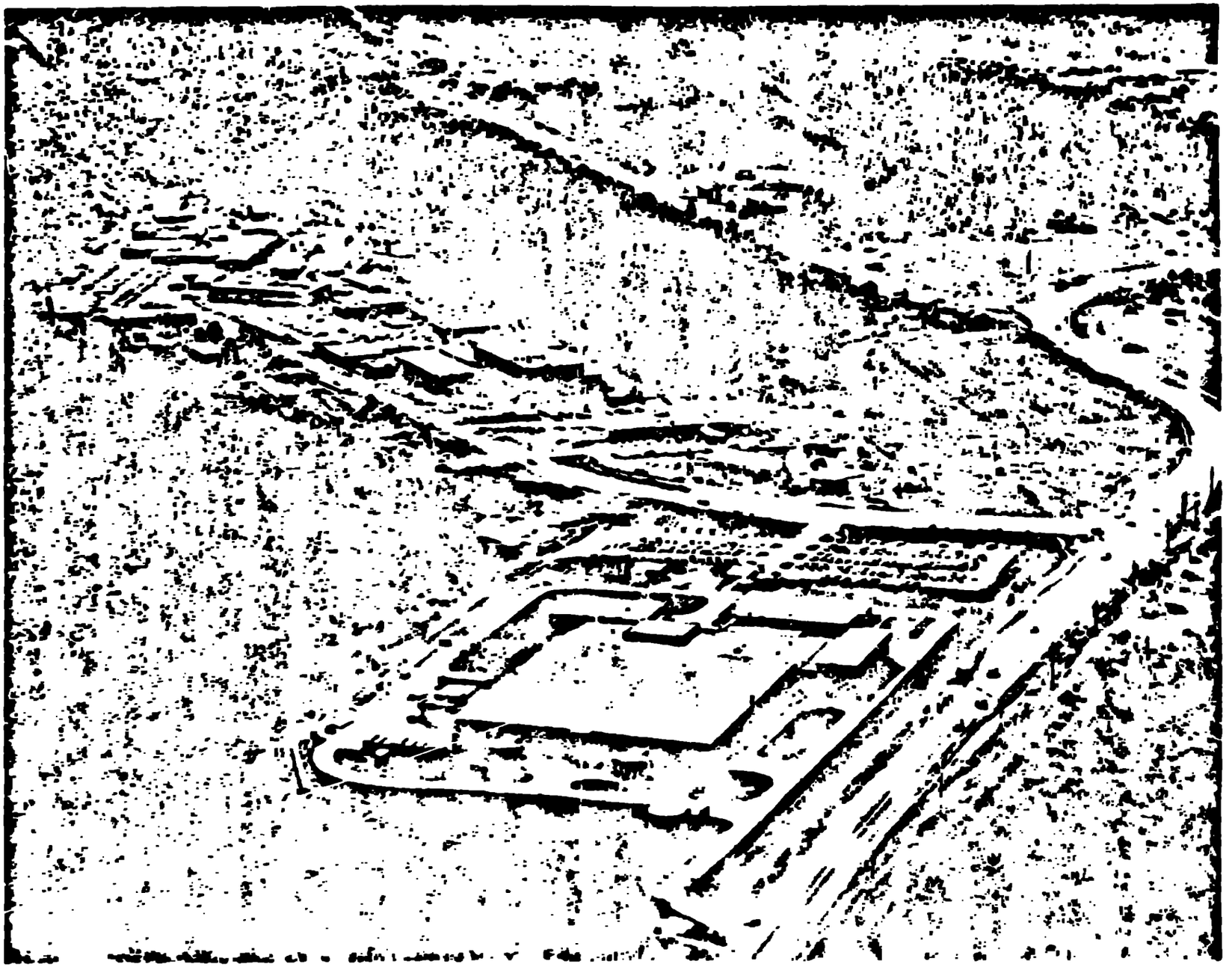

Figure 1. Aerial View of New Plutonium Facility at Los Alamos

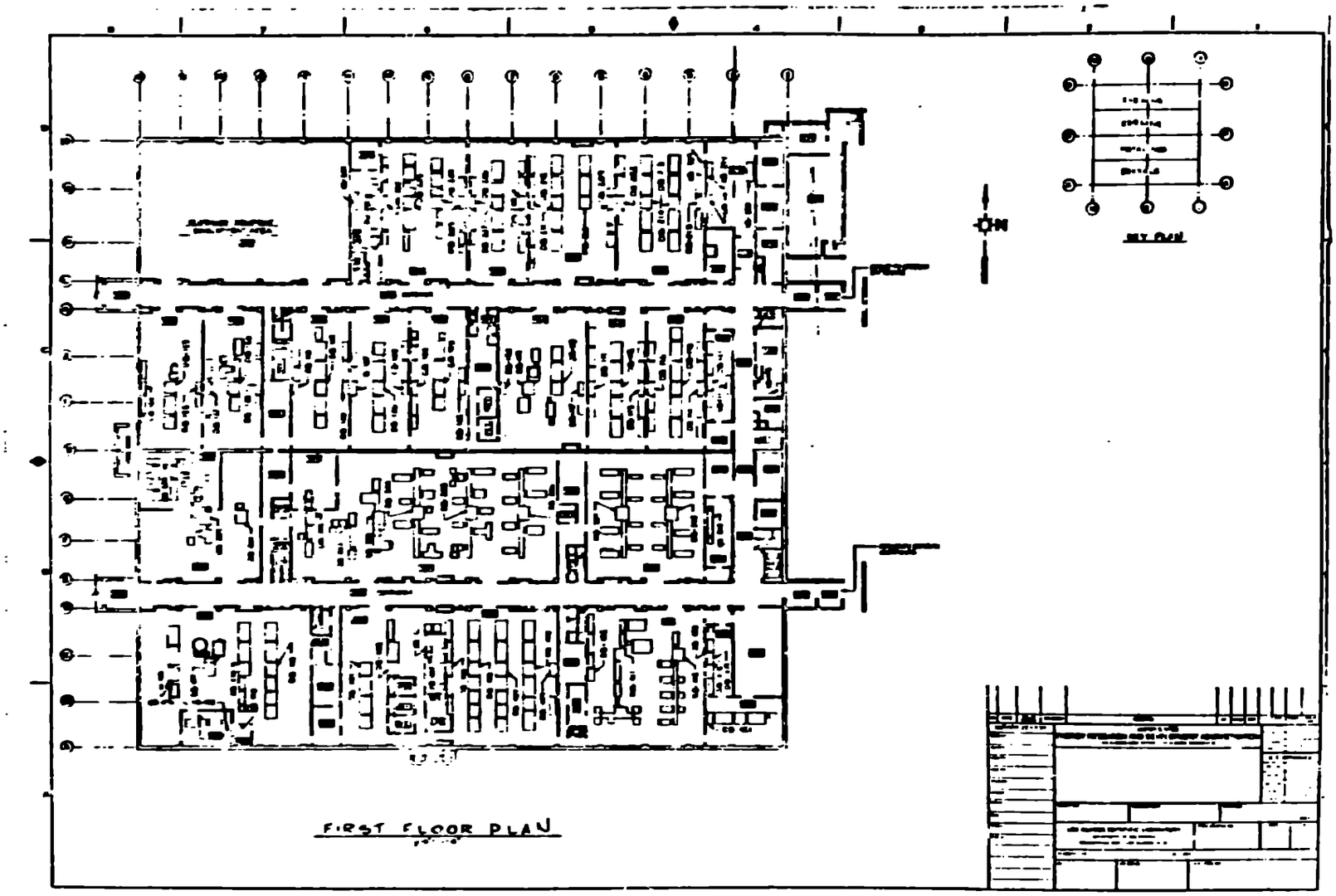


Figure 2. Floor Plan of Process Building at the New Plutonium Facility

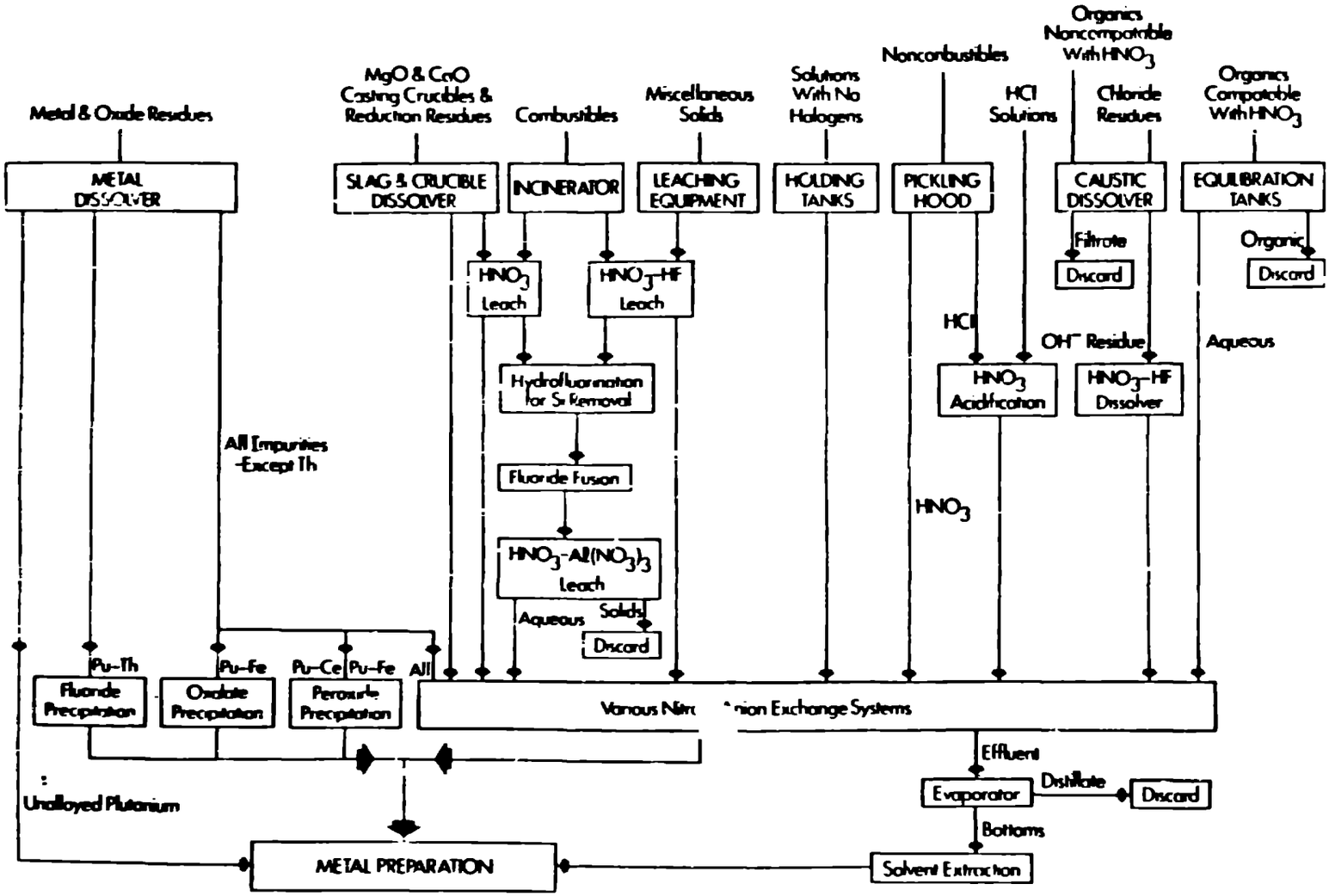


Figure 3.
Flow Of Material In Present Recovery Plant

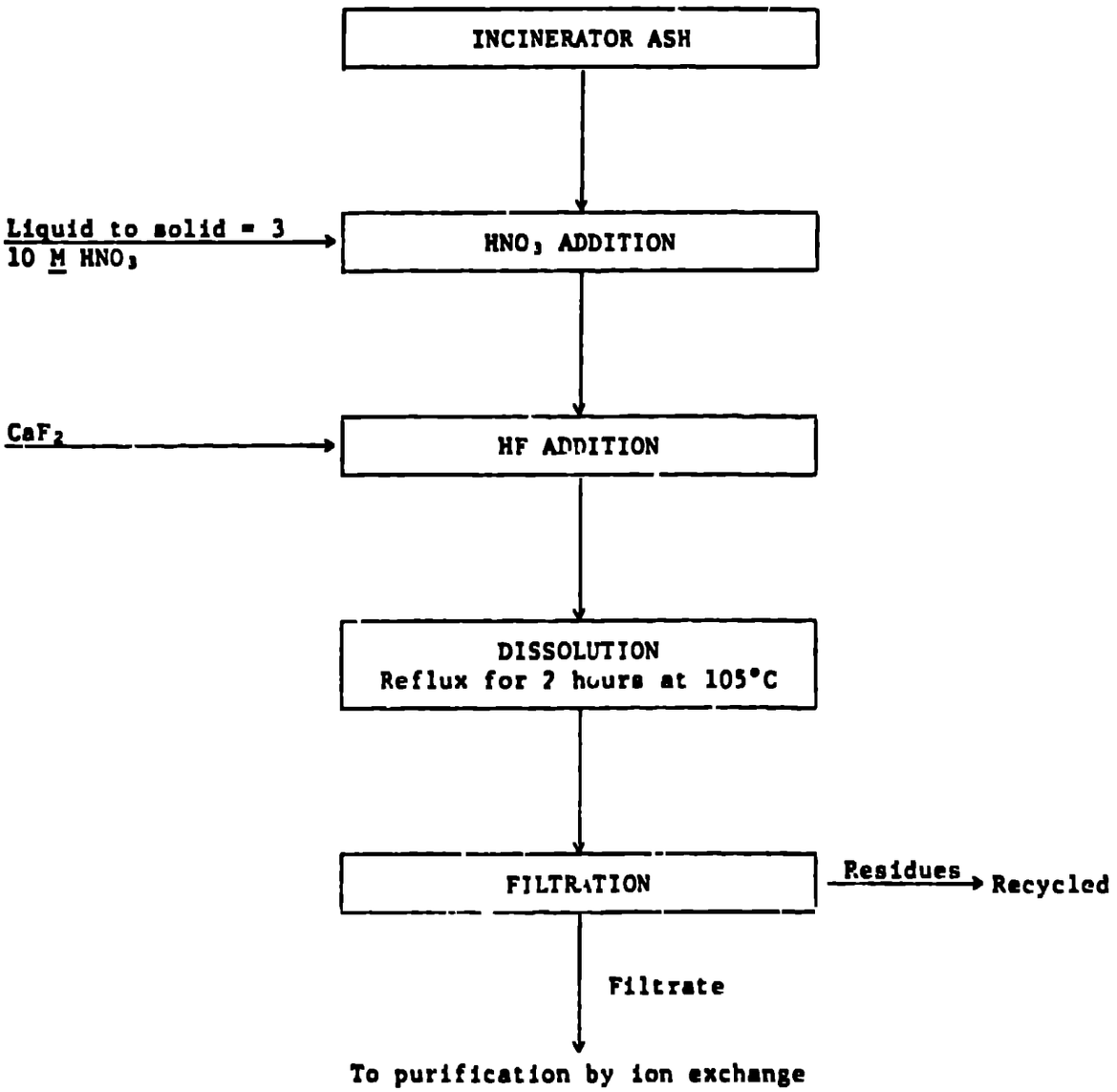


Figure 4. Dissolution of Incinerator Ash

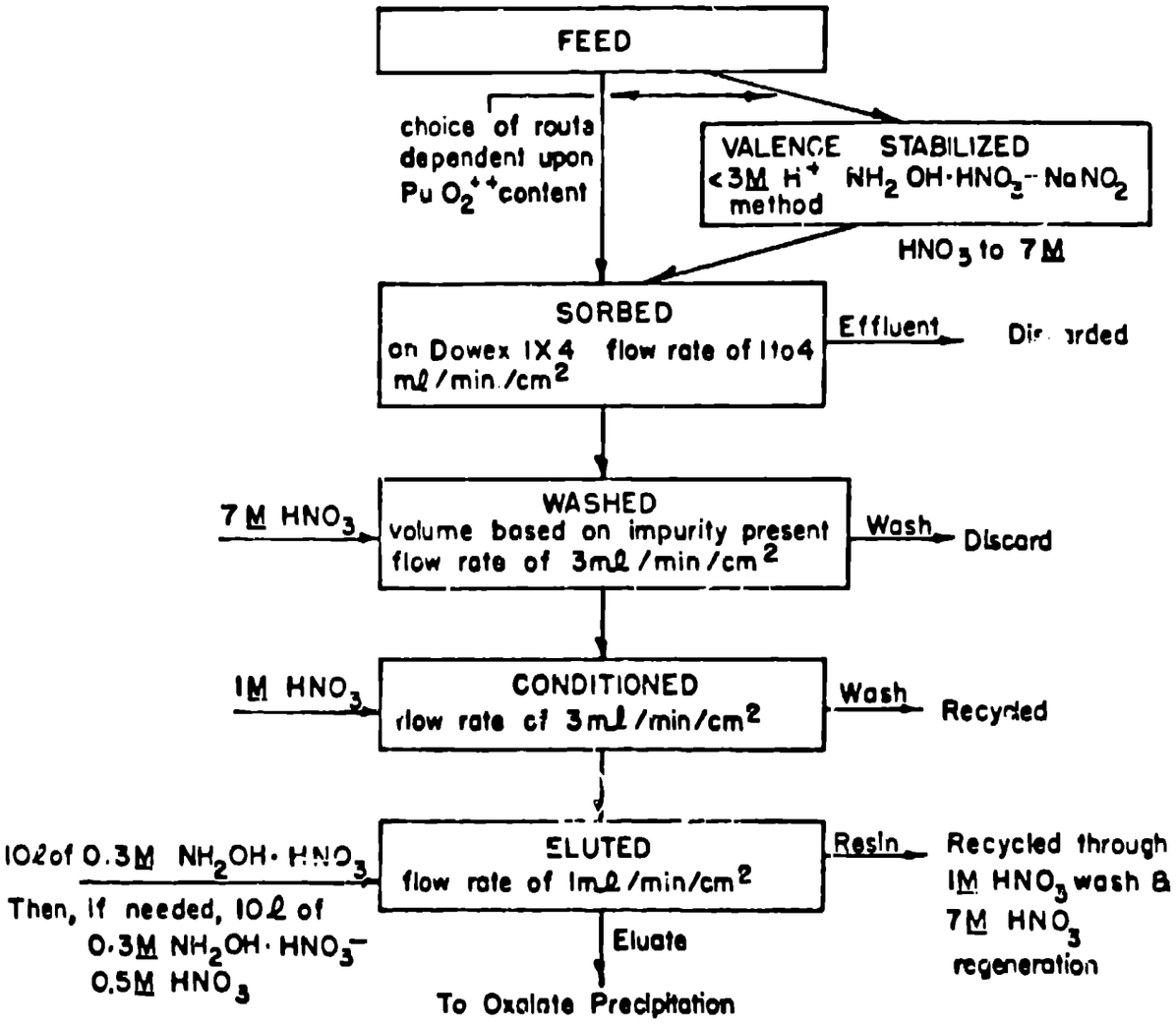


Figure 5. Nitrate Anion-Exchange Processing of Plutonium

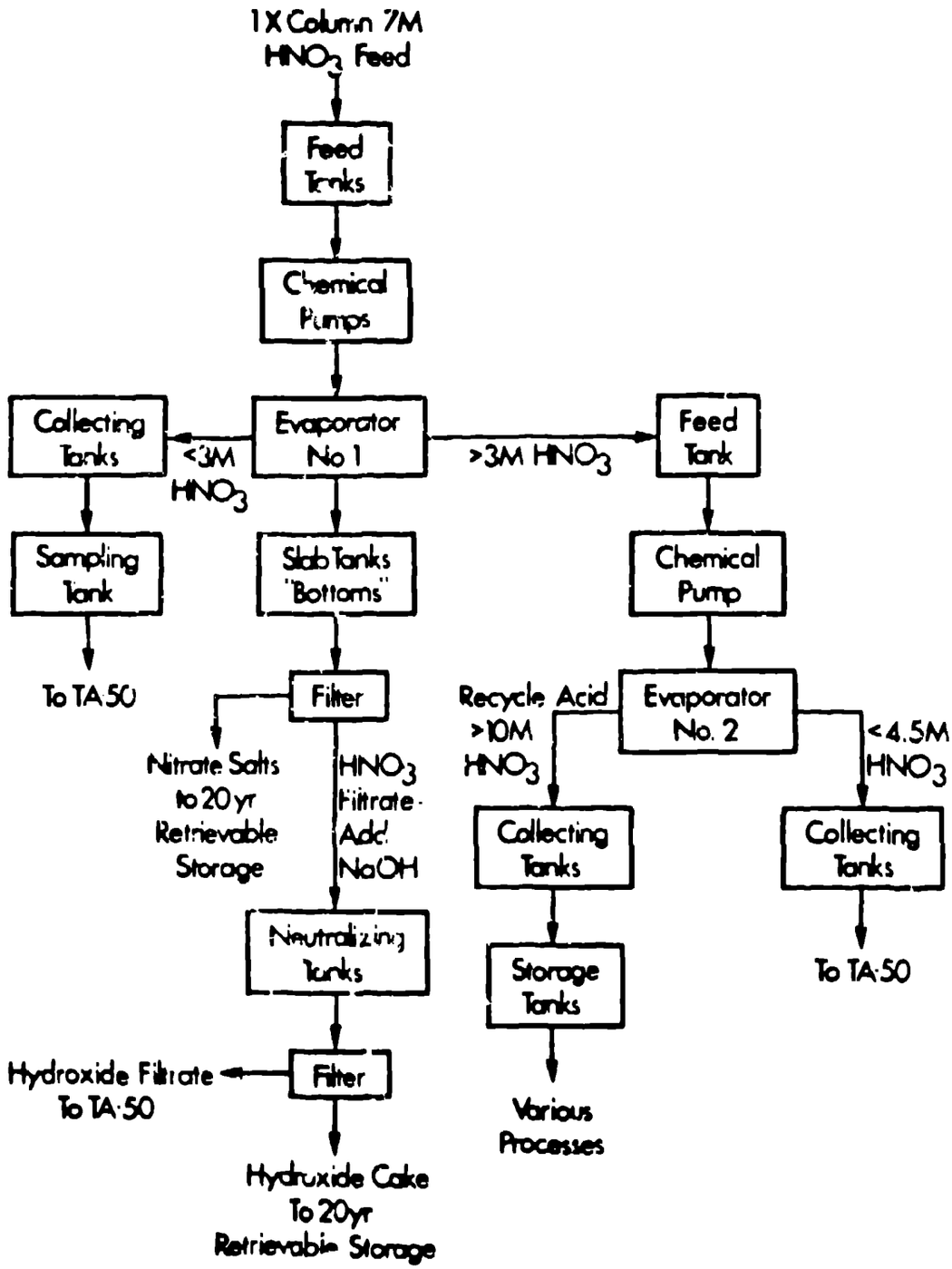


Fig. 6. Evaporation of Nitric Acid

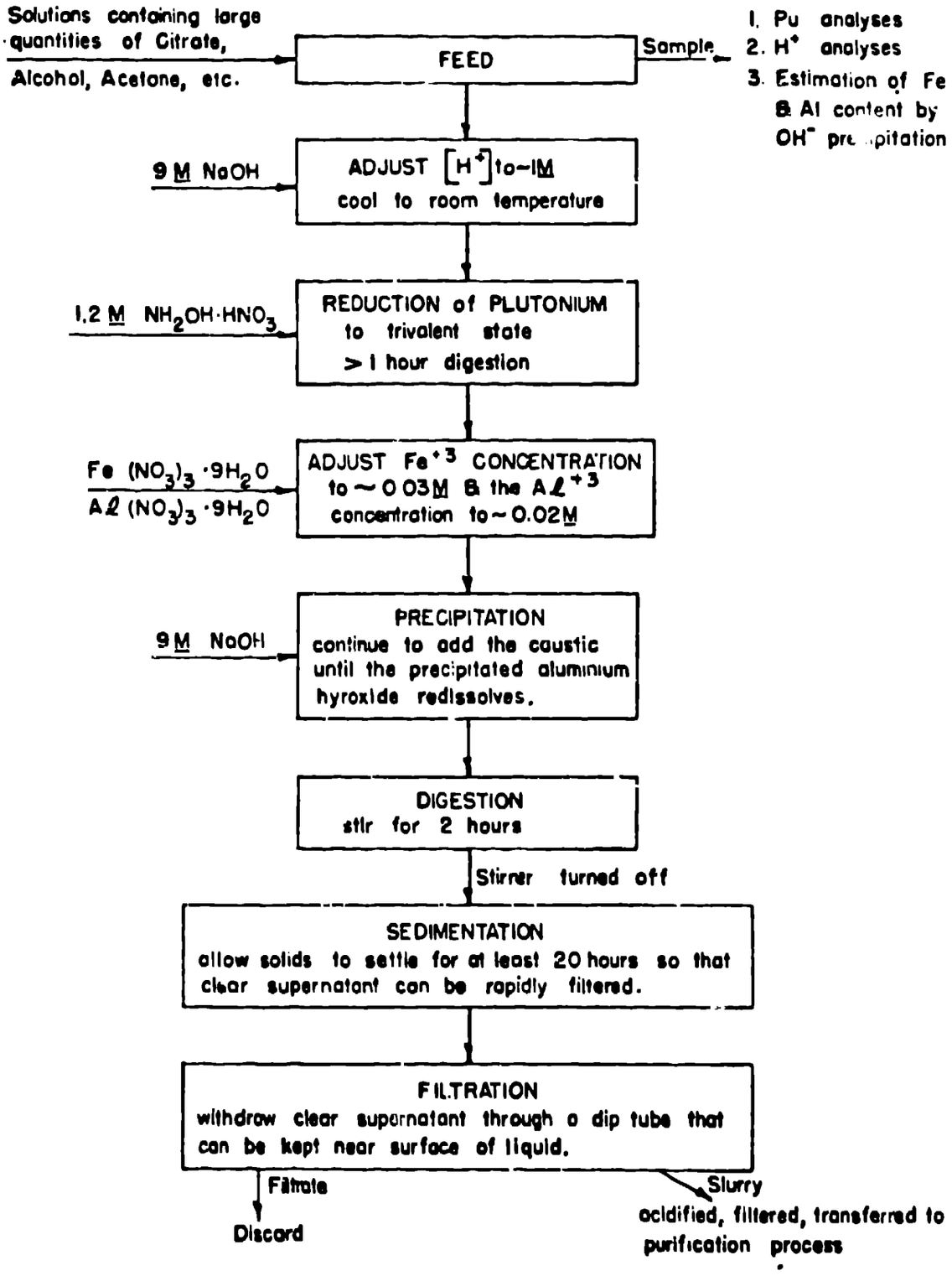


Figure 7. Scavenging of Plutonium b[illegible]c Hydroxide Carrier Precipitation

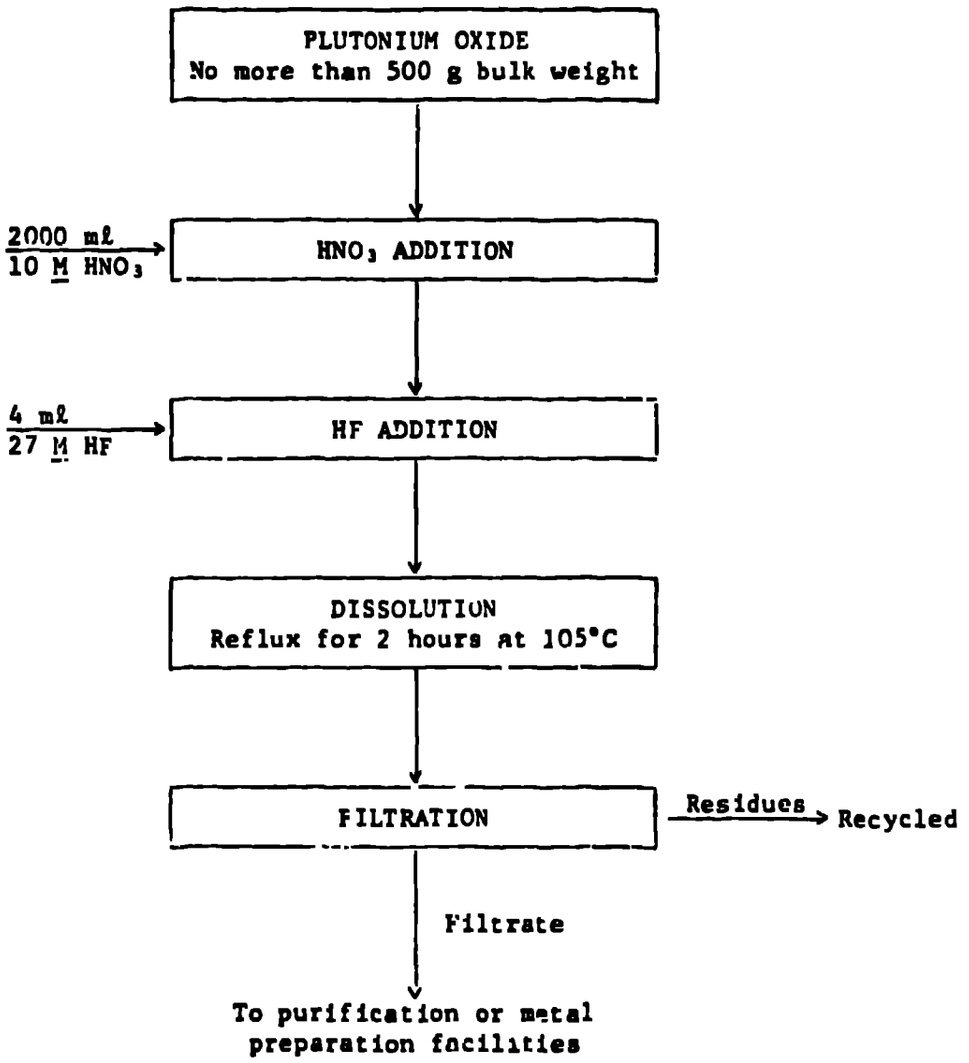


Figure 8. Dissolution of Plutonium Oxide Residues

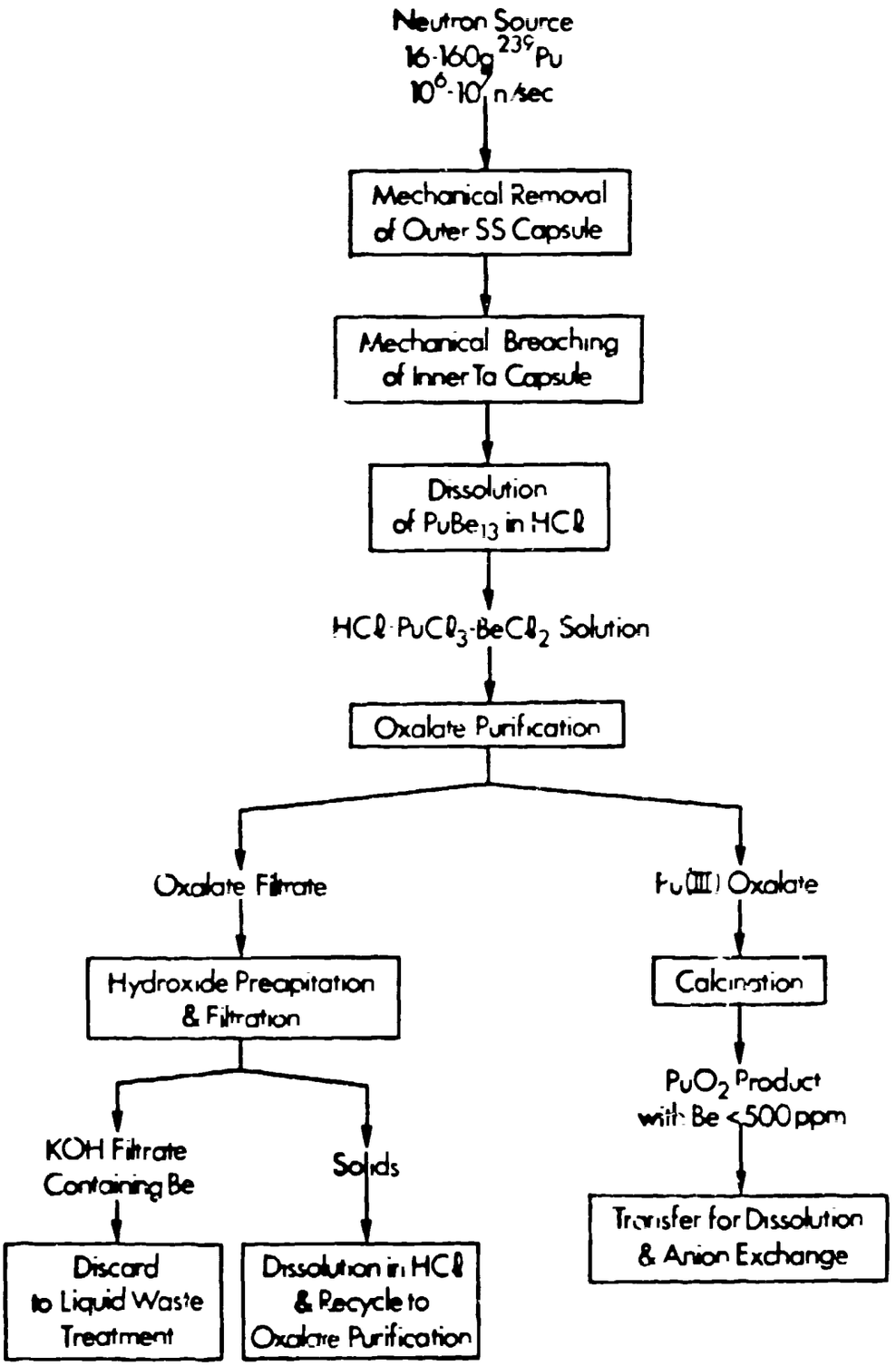


Fig. 9. Processing Pu-Be Neutron Sources

Figure 10. Typical Glovebox Line in Plutonium Facility

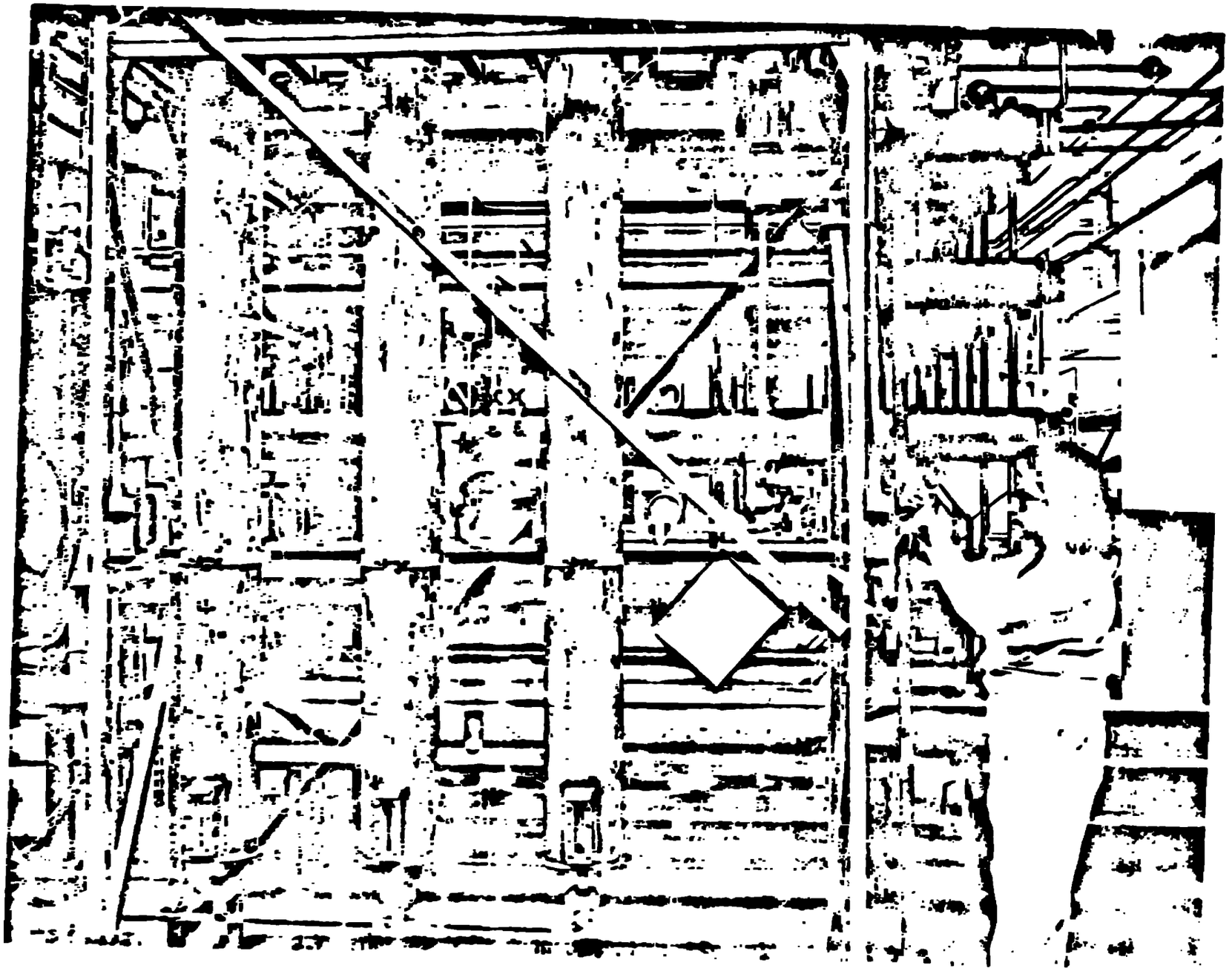

Figure 11. Sampling Station for Discard Solutions

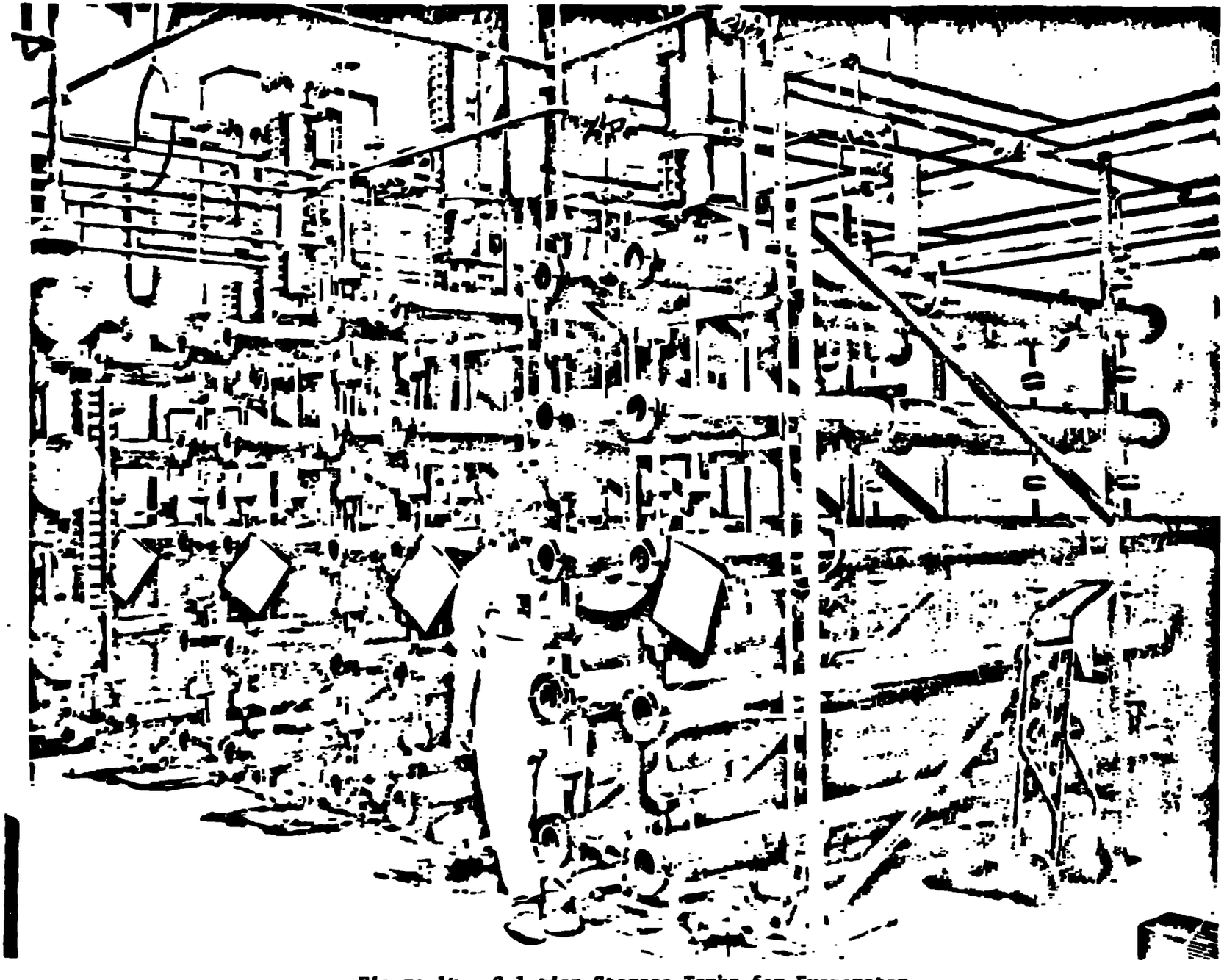

Figure 12. Solution Storage Tanks for Evaporator

# ENCLOSURE 3

TA-55 Evaporator Bottom Characterization

ENV-DO-15-0075

LA-UR-15-21522

Date: MAR 1 9 2015

Los Alamos
NATIONAL LABORATORY
1943 - 1993

# memorandum

NUCLEAR MATERIALS PROCESS TECHNOLOGY
NMT-2 MS E501

To/MS: Joel Williams, NMT-2 Group Ldr
From/MS: Gerry Veazey
Phone/FAX: 5-3948/FAX 5-1780
Symbol: NMT-2:FY95-044
Date: 12/22/94

**TA-55 EVAPORATOR BOTTOM CHARACTERIZATION**

In May 1993, the task was initiated to chemically characterize the TA-55 evaporator bottom (EV) waste stream for the purpose of defining a formulation for surrogate waste preparation. For this task, analytical data for a comprehensive list of anionic and cationic species was obtained on samples of all EV batches produced by the TA-55 evaporator from April 1992 to February 1994. The results are presented herein sorted into the historical categories of LR (lean residue)-based, oxalate filtrate-based, and hot distillate-based EV streams. The results for each category are presented in Attachment A for the non-RCRA species and Attachment B for the EPA-hazardous RCRA-metal species.

The precision of these results is not optimum due to two factors. An unusually small number of EV batches was generated during this period due to the stand-downs from the mixed-waste moratorium and safety systems assessment, especially in the LR- and oxalate filtrate-based categories. In addition, there is an inherent large spread in the composition of the various sources that make up the categories. This is especially the case in the hot distillate-based category with such varied sources as hot distillate reruns, pump seal water, and vacuum trap solution.

Because of these considerations, the probability is lowered that these results represent a random sampling of future EV batches. Reporting the data as mean values with high standard deviations would not be particularly meaningful. I have chosen, instead, to present the results as median and range values, along with the number of samples to express relative precision. Within this framework, the results can be considered adequate for the make-up of surrogate EV waste.

GV:gv

Attachments: 2 a/s

Cy:Steve Schreiber, NMT-2, E511
Bill Schueler, NMT-7, MS E501
Wayne Punjak, NMT-2, MS E511
NMT-2 File

Atta. .nt A

## ANALYSES OF EVAPORATOR BOTTOMS

(g/l except as stated)

| | Lean Residue | | | | Oxalate Filtrate | | | | Hot Distillate | | | |
|---|---|---|---|---|---|---|---|---|---|---|---|---|
| | Median | Min. | Max. | No. | Median | Min. | Max. | No. | Median | Min. | Max. | No. |
| Fe | 17.0 | 11.0 | 30.2 | 7 | 7.9 | 5.5 | 11.0 | 4 | 16.9 LR | 9.2 | 29.0 | 15 |
| Ca | 61 | 54.4 | 63.7 | 3 | 10.5 | 5.5 | 22.7 | 3 | 39.1 MID | 6.8 | 52.9 | 8 |
| K | 17.6 | 16.3 | 24.4 | 3 | 4.8 | .62 | 10.8 | 3 | 14.6 MID | 5.3 | 26.8 | 7 |
| Mg | 58.7 | 52 | 58.9 | 3 | 13.3 | 5.2 | 28.3 | 3 | 41.9 MID | 7.0 | 61.4 | 8 |
| Na | 7.4 | 2.2 | 7.7 | 3 | 23.9 | 21 | 36.0 | 3 | 9.4 LR | 3.3 | 17.1 | 7 |
| Al | 4.6 | 4 | 5.4 | 3 | 2.3 | 1.3 | 4.5 | 3 | 4.7 LR | 1.7 | 19.2 | 7 |
| $NH_3$ | .025 | .005 | .055 | 3 | .090 | .045 | .135 | 2 | .035 LR | <.16 | .05 | 6 |
| Cl | 1.1 | 1.1 | 1.1 | 1 | .265 | .265 | .265 | 1 | 1.35 LR | .72 | 3 | 6 |
| $NO_3$ | 457 | 228 | 541 | 3 | 398 | 201 | 594 | 2 | 419 MID | 332 | 540 | 6 |
| $SO_4$ | 1.6 | 1.6 | 1.6 | 1 | <1 | <1 | <1 | 1 | 1.57 LR | .84 | 2.3 | 2 |
| $C_2O_4$ | 3.3 | 3.3 | 3.3 | 1 | 33.8 | 33.8 | 33.8 | 1 | 11.3 MID | 11.3 | 11.3 | 1 |
| F | 5.4 | 4.3 | 8.8 | 3 | 1.7 | 1.7 | 1.7 | 1 | 5.1 LR | 1.7 | 10.3 | 6 |
| $H^+$ M | 1.0 | .9 | 1.1 | 3 | 4.6 | 3.3 | 5.8 | 2 | 600 LR | 284 | 839 | 6 |
| TDS (1) | 629 | 616 | 860 | 3 | 330 | 281 | 380 | 2 | 1.75 LR | .6 | 2.4 | 6 |

(1) Total Dissolved Solids

Att ment B

RCRA ANALYSES OF EVAPORATOR BOTTOMS

(all analyses in mg/l)

| | Lean Residue | | | | Oxalate Filtrate | | | | Hot Distillate | | | |
|---|---|---|---|---|---|---|---|---|---|---|---|---|
| | Median | Min. | Max. | No. | Median | Min. | Max. | No. | Median | Min. | Max. | No. |
| Ag | <5 | <1 | <5 | 5 | <1 | <1 | <1 | 1 | <1.5 | <.4 | <5 | 10 |
| As | <15 | <5 | 45 | 5 | <5 | <5 | <5 | 2 | 10 | <5* | 18 | 10 |
| Ba | 35 | 27 | 56 | 5 | 18 | <5* | 34 | 2 | 29 | 13 | 80 | 10 |
| Cd | 14 | 9.8 | 28 | 5 | 2.8 | 1.4 | 4.1 | 2 | 14 | 3.8 | 28 | 10 |
| Cr | 3000 | 2200 | 3500 | 5 | 1935 | 970 | 2900 | 2 | 2350 | 1500 | 7000 | 10 |
| Hg | <25 | <5 | 24 | 5 | <5 | <5 | <5 | 2 | 10 | <5* | 18 | 10 |
| Ni | 1800 | 1300 | 2200 | 5 | 1205 | 710 | 1700 | 2 | 1600 | 1100 | 4600 | 10 |
| Pb | 190 | 72 | 330 | 5 | 56 | 26 | 85 | 2 | 125 | 52 | 360 | 10 |
| Se | <8 | <8 | 51 | 5 | <8 | <8 | <8 | 2 | 9 | <1.8* | 18 | 10 |
| Tl | <60 | <20 | <60 | 4 | <20 | <20 | <20 | 1 | <60 | <20 | 730 | 7 |

* Less than values were considered as being centered at the midpoint (<5 = 2.5) when median calculation based on only one less than value.

# ENCLOSURE 4

Characterization of TA-55 Evaporator Bottoms Waste Stream

ENV-DO-15-0075

LA-UR-15-21567

Date: MAR 1 9 2015

# Los Alamos
NATIONAL LABORATORY

# memorandum

**Nuclear Materials Processing-**
**Actinide Process Chemistry**
**NMT-2**

*To/MS:* Distribution
*From/MS:* Gerry Veazey, NMT-2, E511
Amy Castaneda, NMT-2 (Co-op)
*Phone:* 665-3948
*FAX:* 5-1780
*Symbol:* NMT-2:FY96-13
*Date:* October 25, 1996

*Subject:* CHARACTERIZATION OF TA-55 EVAPORATOR BOTTOMS WASTE STREAM

The current effort to develop a vitrified waste form for the TA-55 evaporator bottom (EV) waste stream requires that the composition of this waste stream be known. The last characterization study of the EV waste stream, reported in memorandum NMT-2:FY95-044, included EV batches generated from April 1992 through February 1994. Because periodic changes occur in upstream feed material and processing techniques, it was considered judicious to compile a more recent characterization of the EV waste stream. It is the purpose of this memorandum to report the results of this effort.

The data presented in this memorandum was collected from the analyses that were available for the EV batches produced during the period of March 1994 through May 1996. The data is categorized into 5 types of EV waste: lean residue (LR), oxalate filtrate (OX), dissolution (DS), hot distillate (DIST), and ATLAS. The data presented for each EV waste type includes Pu, Am, U, RCRA metals, and the historically predominant cations. The compiled data for the non-RCRA and RCRA cations are presented for each EV waste category in Tables 1 and 2, respectively. The data are presented as median rather than mean values because the median is resistant to the numerous outlier data points in this data. Also included are maximum values for use in preparation of worst-case surrogates. The data for all EV batches used in the compilation are presented in Appendices 1 - 5.

The data in Appendices 1 - 5 were analyzed by a TSA-1 statistician to determine the best method for presentation of the compiled data. The analysis was made more difficult because the data sets (cations) varied in being composed of 1) normally-distributed data, 2) lognormally-distributed data, 3) data above and below the detection limit, and 4) data with varying detection limits. From an ideal statistical point-of-view, a common statistical technique could not be used for all of these data types as was done in Tables 1 and 2, which were intended for the layman. For those interested in the more rigorous statistical analysis, I have included in Attachments 1 and 2 the TSA-1 memos describing their analysis. Included in these attachments are selected distribution plots and the values for mean, standard deviation, and the 95% confidence interval on the median.

Several changes are apparent in comparing the data in this characterization study to that in the previous study. The composition of the three EV categories represented in both studies (LR, OX, and DIST) differ by more than 100% for several cations, with both increases and

decreases in concentration being observed. In addition, the current study contains a large percentage of DS samples, while the DS process had no output during the previous period. These changes are primarily the result of the ongoing Vault Workoff Program and the accompanying increased diversity in feed materials being processed. The composition of the EV waste streams should continue to be unsettled during the implementation of this program.

The anionic analyses were not available for the EV batches contained in this report, but it can be assumed that nitrate is by a large extent the most predominate anion in all EV waste streams. In the previous characterization study, the other anions ($F^{-1}$, $Cl^{-1}$, $SO_4^{-2}$, and $C_2O_4^{-2}$) each comprised less than 1.2 wt% of the total anionic content, except for $C_2O_4^{-2}$ in the hot distillate (2.6 wt%) and oxalate filtrate (7.8 wt%) streams. It is certain that changes in the concentration of these minor anions also occurred as a result of the Vault Workoff Program. The most significantly altered concentration is likely to have been for $Cl^{-1}$ as a result of the campaigning of the high-chloride hydroxide cakes. However, the concentration of the minor anions would still have comprised a minor percentage of the nitrate-based EV waste stream.

GV:gv

Enclosures: as stated

Dist: Steve Yarbro, NMT-2, E511
Kathleen Gruetzmacher, NMT-7, E501
Jeff Hatchell, NMT-7, E501
Author
NMT-2 file

**TABLE 1**
**Data Compilation for Non-RCRA Cations**
(all units in g/l)

| Cation | Lean Residue | | Oxalate Filtrate | | Dissolution | | Hot Distillate | | ATLAS | |
|---|---|---|---|---|---|---|---|---|---|---|
| | Median | Max. | Median | Max. | Median | Max. | Median | Max. | Median | Max. |
| Al | 2.8 | 5.0 | 2.6 | 4.5 | 5.3 | 27.0 | 3.0 | 24.0 | 5.6 | 9.1 |
| Ca | 33.0 | 81.0 | 23.0 | 45.0 | 46.0 | 110.0 | 29.0 | 64.0 | 29.0 | 58.0 |
| Fe | 25.0 | 34.0 | 17.0 | 36.0 | 15.0 | 51.0 | 13.5 | 20.0 | 12.0 | 54.0 |
| K | 5.1 | 7.8 | 10.35 | 45.0 | 33.0 | 59.0 | 24.0 | 62.0 | 28.5 | 54.0 |
| Mg | 36.0 | 46.0 | 21.0 | 73.0 | 58.0 | 84.0 | 43.0 | 110.0 | 37.0 | 52.0 |
| Na | 1.9 | 6.6 | 2.65 | 36.0 | 2.2 | 51.0 | 1.9 | 19.0 | 3.0 | 72.0 |
| Pu | 0.562 | 1.25 | 0.691 | 1.29 | 0.486 | 1.7 | 0.384 | 2.52 | 0.395 | 2.11 |
| Am | 0.0104 | 0.0346 | 0.0338 | 0.0588 | 0.0696 | 0.211 | 0.0327 | 0.161 | 0.063 | 0.152 |
| U | <0.020 | <0.020 | <0.020 | 0.059 | <0.020 | <0.020 | <0.020 | <0.200 | <0.020 | 3.800 |

LA-UR-15-21567

**TABLE 2**
**Data Compilation for RCRA Cations**
(all units in mg/l)

| | Lean Residue | | Oxalate Filtrate | | Dissolution | | Hot Distillate | | ATLAS | |
|---|---|---|---|---|---|---|---|---|---|---|
| Cation | Median | Max. | Median | Max. | Median | Max. | Median | Max. | Median | Max. |
| Ag | <1 | <1 | <1 | <1 | <1 | 2.3 | <1 | 2 | <1 | <1 |
| As | <5 | <5 | <5 | <5 | <5 | 17 | <5 | 15 | <5 | <56 |
| Ba | 38 | 93 | 23.5 | 32 | 14 | 40 | 14.5 | 70 | 14 | 120 |
| Be | 3.9 | 34 | 20 | 100 | 85.5 | 1300 | 27.5 | 1400 | 28 | 910 |
| Cd | <1 | <1 | <1 | 1 | <1 | 160 | <1 | 200 | <1 | 18 |
| Cr | 6600 | 9300 | 3350 | 4800 | 2800 | 5700 | 3000 | 6400 | 2600 | 9000 |
| Hg | <5 | <5 | <5 | <5 | <5 | <5 | <5 | <50 | <5 | <5 |
| Ni | 2700 | 4500 | 1020 | 2400 | 1800 | 3100 | 1800 | 4300 | 1700 | 4500 |
| Pb | 21 | 130 | 54 | 160 | 140 | 600 | 98 | 350 | 61 | 340 |
| Se | <8 | <25 | <25 | <25 | <25 | <25 | <25 | <80 | <8 | <25 |
| Tl | <20 | <20 | <20 | <20 | <20 | <20 | <20 | <20 | <20 | <40 |

Appendix 1 - LEAN RESIDUE

| Sample ID | | LRA19F1 | LRA20F2 | 2LR22AF1 | 2LR22AF3 | 2LR22AF2 | 4LR4BF1A |
|---|---|---|---|---|---|---|---|
| Drum # | | 55312 | 55312/13 | 55325/26/28 | 55326 | 55326 | 55333/34 |
| Assay Date | | Aug-94 | Aug-94 | Feb-95 | Feb-95 | Feb-95 | Apr-95 |
| Element | Units | | | | | | |
| Aluminum | mg/l | 640 | 320 | 1600 | - | - | 3000 |
| Silver | mg/l | - | - | <1 | - | - | <1 |
| Arsenic | mg/l | <5 | <5 | <5 | - | - | <5 |
| Barium | mg/l | <10 | <10 | 24 | - | - | 40 |
| Beryllium | mg/l | 34 | 15 | 6 | - | - | 3.9 |
| Calcium | mg/l | 1500 | 1100 | 13000 | - | - | 34000 |
| Cadmium | mg/l | <1 | <1 | <1 | - | - | <1 |
| Chromium | mg/l | 320 | 220 | 2600 | - | - | 7200 |
| Iron | mg/l | 1600 | 990 | 11000 | - | - | 26000 |
| Mercury | mg/l | <5 | <5 | <5 | - | - | <5 |
| Potassium | mg/l | <60 | <60 | 4800 | - | - | 5300 |
| Magnesium | mg/l | 1800 | 1400 | 17000 | - | - | 39000 |
| Sodium | mg/l | 3100 | 1900 | 3300 | - | - | 1200 |
| Nickel | mg/l | 200 | 150 | 1600 | - | - | 4500 |
| Lead | mg/l | 17 | 8.3 | 36 | - | - | 42 |
| Selenium | mg/l | <8 | <8 | <8 | - | - | <8 |
| Thallium | mg/l | <20 | <20 | <20 | - | - | <20 |
| Uranium | mg/l | - | - | <20 | - | - | <20 |
| Plutonium | g/l | 0.129 | 0.082 | 0.864 | 1.130 | 1.250 | 0.562 |
| Americium | g/l | 0.0050 | 0.0019 | 0.0092 | 0.0145 | 0.0170 | 0.0104 |



LA-UR-15-21567

Appendix 1 - LEAN RESIDUE

| Sample ID | | 4LR4BF1B | 4LR10BF1A | 4LR10BF1B | 4LR10BF1C | 4LR17BF1 |
|---|---|---|---|---|---|---|
| Drum # | | 55333/38 | 55337/39 | 55337/38 | 55338 | 55340/41 |
| Assay Date | | Apr-95 | Apr-95 | Apr-95 | Apr-95 | Apr-95 |
| Element | Units | | | | | |
| Aluminum | mg/l | 2800 | 3100 | 3200 | 2200 | 5000 |
| Silver | mg/l | <1 | <1 | <1 | <1 | <1 |
| Arsenic | mg/l | <5 | <5 | <5 | <5 | <5 |
| Barium | mg/l | 40 | 38 | 39 | 37 | 93 |
| Beryllium | mg/l | 3.9 | <1 | <1 | <1 | 17 |
| Calcium | mg/l | 33000 | 46000 | 51000 | 33000 | 81000 |
| Cadmium | mg/l | <1 | <1 | <1 | <1 | <1 |
| Chromium | mg/l | 6600 | 8700 | 9300 | 5600 | 8000 |
| Iron | mg/l | 25000 | 33000 | 34000 | 22000 | 34000 |
| Mercury | mg/l | <5 | <5 | <5 | <5 | <5 |
| Potassium | mg/l | 5100 | 5400 | 5400 | 3800 | 7800 |
| Magnesium | mg/l | 36000 | 33000 | 36000 | 46000 | 39000 |
| Sodium | mg/l | 1200 | 2000 | 1100 | 1000 | 6600 |
| Nickel | mg/l | 4100 | 2700 | 2700 | 2300 | 3800 |
| Lead | mg/l | 42 | 21 | 21 | 18 | 130 |
| Selenium | mg/l | <8 | <8 | <8 | <8 | <25 |
| Thallium | mg/l | <20 | <20 | <20 | <20 | <20 |
| Uranium | mg/l | <20 | <20 | <20 | <20 | <20 |
| Plutonium | g/l | 0.566 | 0.504 | 0.498 | 0.387 | 1.160 |
| Americium | g/l | 0.0102 | 0.0108 | 0.0104 | 0.0092 | 0.0346 |



LA-UR-15-21567

Appendix 2 - OXALATE FILTRATE

| Sample ID | | 12OX18AF1 | 4OX6BF1 | 5OX9BF1 | EVOX092295A1 | EVOX040996B1 | EVOX041096B1 |
|---|---|---|---|---|---|---|---|
| Drum # | | 55312/13 | 55333/38 | 55344 | 55353/54 | 55371 | 55371 |
| Assay Date | | Aug-94 | Apr-95 | May-95 | Oct-95 | Apr-96 | Apr-96 |
| Element | Units | | | | | | |
| Aluminum | mg/l | 4500 | 1700 | 1500 | 3500 | - | - |
| Silver | mg/l | - | <1 | <1 | <1 | <1 | <1 |
| Arsenic | mg/l | <5 | <5 | <5 | <5 | <5 | <5 |
| Barium | mg/l | <5 | 28 | 5 | 21 | 32 | 26 |
| Beryllium | mg/l | 2 | 40 | 100 | 38 | <1 | <1 |
| Calcium | mg/l | 5500 | 18000 | 10000 | 45000 | 28000 | 39000 |
| Cadmium | mg/l | 1 | <1 | <1 | <1 | <1 | <1 |
| Chromium | mg/l | 970 | 3400 | 1200 | 4800 | 3300 | 3700 |
| Iron | mg/l | 5500 | 13000 | 5500 | 21000 | 27000 | 36000 |
| Mercury | mg/l | <5 | <5 | <5 | <5 | <5 | <5 |
| Potassium | mg/l | 620 | 4700 | 16000 | 45000 | - | - |
| Magnesium | mg/l | 5200 | 21000 | 21000 | 73000 | - | - |
| Sodium | mg/l | 36000 | 22000 | 620 | 1800 | 2600 | 2700 |
| Nickel | mg/l | 710 | 2400 | 880 | 2400 | 1100 | 940 |
| Lead | mg/l | 26 | 33 | 44 | 160 | 130 | 64 |
| Selenium | mg/l | <8 | <8 | <25 | <25 | <25 | <25 |
| Thallium | mg/l | <20 | <20 | <20 | <20 | <20 | <20 |
| Uranium | mg/l | 59 | <20 | <20 | <20 | <20 | <20 |
| Plutonium | g/l | 0.1550 | 0.803 | 0.579 | 0.890 | 0.514 | 1.290 |
| Americium | g/l | 0.0025 | 0.0074 | 0.0286 | 0.0588 | 0.0520 | 0.0389 |



LA-UR-15-21567

Appendix 3 - DISSOLUTION

| Sample ID | | 4DS19BF1B | 4DS19BF1A | 4DS26BF1B | 4DS26BF1A | 5DS10BF1B | EVDS100495B1 |
|---|---|---|---|---|---|---|---|
| Drum # | | 55335/40 | 55335/40 | 55342 | 55342 | 55345 | 55349/53 |
| Assay Date | | Apr-95 | May-95 | May-95 | May-95 | May-95 | May-95 |
| Element | Units | | | | | | |
| Aluminum | mg/l | 6900 | 6800 | 4900 | 5700 | 4300 | 3700 |
| Silver | mg/l | <1 | <1 | <1 | <1 | <1 | <1 |
| Arsenic | mg/l | <5 | <5 | <5 | <5 | <5 | <5 |
| Barium | mg/l | 22 | 27 | 7.1 | 7.6 | 7.5 | 18 |
| Beryllium | mg/l | 1300 | 1300 | 420 | 490 | 100 | 33 |
| Calcium | mg/l | 48000 | 46000 | 49000 | 59000 | 43000 | 65000 |
| Cadmium | mg/l | <1 | <1 | <1 | <1 | <1 | <1 |
| Chromium | mg/l | 4000 | 4200 | 3300 | 4100 | 2600 | 4100 |
| Iron | mg/l | 19000 | 19000 | 14000 | 17000 | 11000 | 19000 |
| Mercury | mg/l | <5 | <5 | <5 | <5 | <5 | <5 |
| Potassium | mg/l | 51000 | 50000 | 47000 | 55000 | 42000 | 31000 |
| Magnesium | mg/l | 58000 | 58000 | 59000 | 43000 | 55000 | 75000 |
| Sodium | mg/l | 2900 | 3100 | 1100 | 1400 | 1000 | 1900 |
| Nickel | mg/l | 2000 | 2200 | 1900 | 2100 | 1400 | 2000 |
| Lead | mg/l | 230 | 200 | 460 | 530 | 220 | 99 |
| Selenium | mg/l | <25 | <25 | <25 | <25 | <25 | <25 |
| Thallium | mg/l | <20 | <20 | <20 | <20 | <20 | <20 |
| Uranium | mg/l | <20 | <20 | <20 | <20 | <20 | <20 |
| Plutonium | g/l | 0.613 | 0.635 | 0.289 | 0.38 | 0.387 | 0.793 |
| Americium | g/l | 0.146 | 0.15 | 0.19 | 0.211 | 0.0696 | 0.0606 |



LA-UR-15-21567

Appendix 3 - DISSOLUTION

| Sample ID | | EVDS100495A1 | 5DS10BF1A | EVDS100495A2 | EVDS121495A1 | EVDS121595B1 | EVDS090795A1 |
|---|---|---|---|---|---|---|---|
| Drum # | | 55350/52 | 55345 | 55349/50 | 55357 | 55356 | 55352 |
| Assay Date | | Sep-95 | Oct-95 | Oct-95 | Dec-95 | Dec-95 | Jan-96 |
| Element | Units | | | | | | |
| Aluminum | mg/l | 1600 | 3700 | 2800 | 16000 | 5200 | 3000 |
| Silver | mg/l | <1 | <1 | <1 | <1 | 1.3 | <1 |
| Arsenic | mg/l | <5 | <5 | <5 | <5 | <5 | <5 |
| Barium | mg/l | 8.5 | 7.9 | 12 | 40 | 14 | 15 |
| Beryllium | mg/l | 13 | 81 | 17 | 280 | 45 | 12 |
| Calcium | mg/l | 26000 | 54000 | 51000 | 110000 | 49000 | 53000 |
| Cadmium | mg/l | <1 | <1 | <1 | <1 | <1 | <1 |
| Chromium | mg/l | 1800 | 2700 | 2700 | 5700 | 3700 | 2800 |
| Iron | mg/l | 8900 | 12000 | 13000 | 51000 | 18000 | 13000 |
| Mercury | mg/l | <5 | <5 | <5 | <5 | <5 | <5 |
| Potassium | mg/l | 13000 | 47000 | 19000 | 51000 | 40000 | 30000 |
| Magnesium | mg/l | 39000 | 62000 | 68000 | 72000 | 76000 | 79000 |
| Sodium | mg/l | 850 | 1000 | 1500 | 51000 | 4900 | 1700 |
| Nickel | mg/l | 1000 | 1400 | 1500 | 3000 | 1800 | 1500 |
| Lead | mg/l | 44 | 210 | 65 | 600 | 180 | 180 |
| Selenium | mg/l | <25 | <25 | <25 | <25 | <25 | <25 |
| Thallium | mg/l | <20 | <20 | <20 | <20 | <20 | <20 |
| Uranium | mg/l | <20 | <20 | <20 | <20 | <20 | <20 |
| Plutonium | g/l | 0.33 | 0.474 | 0.55 | 1.7 | 0.637 | 0.342 |
| Americium | g/l | 0.0471 | 0.0681 | 0.0285 | 0.152 | 0.0756 | 0.0678 |



LA-UR-15-21567

Appendix 3 - DISSOLUTION

| Sample ID | | EVDS011896B2 | EVDS121495B1 | EVDS121495A2 | EVDS011896B1 | EVDS012696B1 | EVDS021396B2 |
|---|---|---|---|---|---|---|---|
| Drum # | | 55359 | 55358 | 55360 | 55359 | 55361 | 55365 |
| Assay Date | | Jan-96 | Jan-96 | Jan-96 | Jan-96 | Feb-96 | Feb-96 |
| Element | Units | | | | | | |
| Aluminum | mg/l | 5900 | 7300 | 4400 | 5600 | 3900 | 4600 |
| Silver | mg/l | <1 | <1 | 2.3 | <1 | <1 | <1 |
| Arsenic | mg/l | <5 | <5 | <5 | <5 | <5 | <5 |
| Barium | mg/l | 19 | 22 | 5.8 | 17 | 13 | 13 |
| Beryllium | mg/l | 79 | 140 | 6.4 | 100 | 113 | 115 |
| Calcium | mg/l | 46000 | 93000 | 57000 | 42000 | 32000 | 41000 |
| Cadmium | mg/l | <1 | <1 | <1 | <1 | <1 | <1 |
| Chromium | mg/l | 4200 | 3800 | 2800 | 4100 | 2700 | 2800 |
| Iron | mg/l | 17000 | 37000 | 14000 | 17000 | 11000 | 14000 |
| Mercury | mg/l | <5 | <5 | <5 | <5 | <5 | <5 |
| Potassium | mg/l | 55000 | 59000 | 41000 | 50000 | 45000 | 34000 |
| Magnesium | mg/l | 55000 | 78000 | 80000 | 57000 | 48000 | 54000 |
| Sodium | mg/l | 3900 | 21000 | 2800 | 3400 | 2300 | 1700 |
| Nickel | mg/l | 2000 | 2500 | 910 | 2000 | 1400 | 2000 |
| Lead | mg/l | 130 | 380 | 120 | 110 | 99 | 130 |
| Selenium | mg/l | <25 | <25 | <25 | <25 | <25 | <25 |
| Thallium | mg/l | <20 | <20 | <20 | <20 | <20 | <20 |
| Uranium | mg/l | <20 | <20 | <20 | <20 | <20 | <20 |
| Plutonium | g/l | 0.502 | 0.912 | 0.416 | 0.486 | 0.327 | 1.07 |
| Americium | g/l | 0.063 | 0.12 | 0.0575 | 0.0579 | 0.0656 | 0.0864 |



LA-UR-15-21567

Appendix 3 - DISSOLUTION

| Sample ID | | EVDS021396B1 | EVDS021496B1 | EVDS020896B2 | EVDS020896B1 | EVDS020696B1 | EVDS012996B1 |
|---|---|---|---|---|---|---|---|
| Drum # | | 55364 | 55365 | 55363 | 55363 | 55362 | 55362 |
| Assay Date | | Feb-96 | Feb-96 | Feb-96 | Feb-96 | Feb-96 | Feb-96 |
| Element | Units | | | | | | |
| Aluminum | mg/l | 5400 | 17000 | 3800 | 4300 | 4700 | 4300 |
| Silver | mg/l | <1 | <1 | <1 | <1 | <1 | <1 |
| Arsenic | mg/l | 13 | <5 | <5 | <5 | <5 | <5 |
| Barium | mg/l | 16 | 8.8 | 4.9 | 5.7 | 12 | 12 |
| Beryllium | mg/l | 140 | 260 | 59 | 66 | 150 | 140 |
| Calcium | mg/l | 46000 | 49000 | 29000 | 34000 | 38000 | 34000 |
| Cadmium | mg/l | <1 | <1 | <1 | <1 | <1 | <1 |
| Chromium | mg/l | 3500 | 2800 | 2700 | 3200 | 3400 | 2800 |
| Iron | mg/l | 17000 | 11000 | 13000 | 14000 | 14000 | 13000 |
| Mercury | mg/l | <5 | <5 | <5 | <5 | <5 | <5 |
| Potassium | mg/l | 41000 | 25000 | 31000 | 35000 | 35000 | 32000 |
| Magnesium | mg/l | 61000 | 52000 | 50000 | 52000 | 56000 | 47000 |
| Sodium | mg/l | 2200 | 1900 | 1800 | 1900 | 1900 | 1800 |
| Nickel | mg/l | 2500 | 1400 | 1800 | 1800 | 2000 | 1900 |
| Lead | mg/l | 170 | 220 | 130 | 130 | 140 | 120 |
| Selenium | mg/l | <25 | <25 | <25 | <25 | <25 | <25 |
| Thallium | mg/l | <20 | <20 | <20 | <20 | <20 | <20 |
| Uranium | mg/l | <20 | <20 | <20 | <20 | <20 | <20 |
| Plutonium | g/l | 0.558 | 0.405 | 0.524 | 0.509 | 0.399 | 0.384 |
| Americium | g/l | 0.0965 | 0.0909 | 0.067 | 0.0743 | 0.0921 | 0.0849 |



LA-UR-15-21567

Appendix 3 - DISSOLUTION

| Sample ID | | EVDS021496B2 | EVDS022796B1 | EVDS022796B2 | EVDS021496B3 | EVDS030896A1 | EVDS030896A2 |
|---|---|---|---|---|---|---|---|
| Drum # | | 55366 | 55367 | 55367 | 55364 | 55366/67 | 55366 |
| Assay Date | | Feb-96 | Feb-96 | Feb-96 | Mar-96 | Mar-96 | Mar-96 |
| Element | Units | | | | (see note)* | (see note)* | |
| Aluminum | mg/l | 20000 | 18000 | 15000 | 20000 | 27000 | 8200 |
| Silver | mg/l | <1 | <1 | <1 | <1 | <1 | <1 |
| Arsenic | mg/l | <5 | 17 | 12 | <5 | 12 | - |
| Barium | mg/l | 11 | 13 | 19 | 8.2 | 18 | 15 |
| Beryllium | mg/l | 300 | - | - | 210 | - | - |
| Calcium | mg/l | 62000 | - | - | 53000 | - | - |
| Cadmium | mg/l | <1 | <1 | <1 | <1 | <1 | <1 |
| Chromium | mg/l | 3400 | 2200 | 2500 | 2300 | 2200 | 2500 |
| Iron | mg/l | 15000 | - | - | 12000 | - | - |
| Mercury | mg/l | <5 | <5 | <5 | <5 | <5 | <5 |
| Potassium | mg/l | 34000 | 25000 | 26000 | 26000 | 26000 | 24000 |
| Magnesium | mg/l | 45000 | - | - | 55000 | - | - |
| Sodium | mg/l | 2300 | 2100 | 2500 | 1900 | 3700 | 4200 |
| Nickel | mg/l | 1500 | 1400 | 1600 | 1400 | 1600 | 1400 |
| Lead | mg/l | 270 | 230 | 220 | 240 | 150 | 100 |
| Selenium | mg/l | <25 | - | - | <25 | - | - |
| Thallium | mg/l | <20 | <20 | <20 | <20 | <20 | <20 |
| Uranium | mg/l | <20 | - | - | <20 | - | - |
| Plutonium | g/l | 0.486 | 0.497 | 0.542 | 0.68 | 0.487 | 0.317 |
| Americium | g/l | 0.0767 | 0.0829 | 0.0797 | 0.107 | 0.135 | 0.045 |



LA-UR-15-21567

Appendix 3 - DISSOLUTION

| Sample ID | | EVDS030896B1 | EVDS101895B1 | EDVS101895B2 | EVDS030896B2 | EVDS021496B2 | EVDS030896B2 |
|---|---|---|---|---|---|---|---|
| Drum # | | 55366/67 | 55368/69 | 55368/69 | 55370 | 55366 | 55370/71 |
| Assay Date | | Mar-96 | Mar-96 | Mar-96 | Apr-96 | Apr-96 | Apr-96 |
| Element | Units | | | | | | |
| Aluminum | mg/l | 14000 | 4800 | 3000 | 7700 | 1400 | 14000 |
| Silver | mg/l | <1 | <1 | <1 | <1 | <1 | <1 |
| Arsenic | mg/l | - | 8 | - | 8 | 11 | <5 |
| Barium | mg/l | 21 | 18 | 18 | 18 | 18 | <1 |
| Beryllium | mg/l | - | - | - | - | - | <5 |
| Calcium | mg/l | - | - | - | - | - | 44000 |
| Cadmium | mg/l | <1 | <1 | - | <1 | <1 | <1 |
| Chromium | mg/l | 2500 | 2400 | 3200 | 3000 | 2100 | 3700 |
| Iron | mg/l | - | - | - | - | - | 14000 |
| Mercury | mg/l | <5 | <5 | - | <5 | <5 | <5 |
| Potassium | mg/l | 26000 | 25000 | 24000 | 26000 | 26000 | 24000 |
| Magnesium | mg/l | - | - | - | - | - | 52000 |
| Sodium | mg/l | 4700 | 2900 | 3500 | 4200 | 2000 | 3700 |
| Nickel | mg/l | 1700 | 1600 | 1800 | 2000 | 1400 | 2400 |
| Lead | mg/l | 140 | 150 | 100 | 110 | 190 | 150 |
| Selenium | mg/l | - | - | - | - | - | <25 |
| Thallium | mg/l | <20 | <20 | <20 | <20 | <20 | <20 |
| Uranium | mg/l | - | - | - | - | - | <20 |
| Plutonium | g/l | 0.527 | 0.435 | 0.341 | 0.382 | - | 0.454 |
| Americium | g/l | 0.0813 | 0.0625 | 0.0494 | 0.0489 | - | 0.0893 |



LA-UR-15-21567

Appendix 3 - DISSOLUTION

| Sample ID | | EVDS041196A3 | EVDS041196A2 | EVDS041096A2 | EVDS041096A1 | EVDS041196A1 | EVDS041196B1 |
|---|---|---|---|---|---|---|---|
| Drum # | | 55373 | 55374 | 55372/73 | 55372/73 | 55373 | 55374 |
| Assay Date | | Apr-96 | Apr-96 | Apr-96 | Apr-96 | Apr-96 | May-96 |
| Element | Units | | | | | | |
| Aluminum | mg/l | - | - | - | - | - | - |
| Silver | mg/l | <1 | <1 | <1 | <1 | <1 | <1 |
| Arsenic | mg/l | <5 | <5 | <5 | <5 | <5 | <5 |
| Barium | mg/l | 11 | 12 | 27 | 18 | 16 | 12 |
| Beryllium | mg/l | <1 | <1 | <1 | <1 | <1 | 12 |
| Calcium | mg/l | 33000 | 34000 | 39000 | 29000 | 33000 | 50000 |
| Cadmium | mg/l | <1 | <1 | <1 | <1 | <1 | <1 |
| Chromium | mg/l | 2400 | 2500 | 3800 | 2600 | 2600 | 3900 |
| Iron | mg/l | 17000 | 18000 | 39000 | 21000 | 19000 | 17000 |
| Mercury | mg/l | <5 | <5 | <5 | <5 | <5 | <5 |
| Potassium | mg/l | - | - | - | - | - | - |
| Magnesium | mg/l | - | - | - | - | - | 84000 |
| Sodium | mg/l | 1700 | 1900 | 2700 | 1800 | 2400 | 2300 |
| Nickel | mg/l | 1200 | 1200 | 680 | 1200 | 1200 | 2000 |
| Lead | mg/l | 65 | 50 | 60 | 45 | 90 | 76 |
| Selenium | mg/l | <25 | <25 | <25 | <25 | <25 | <25 |
| Thallium | mg/l | <20 | <20 | <20 | <20 | <20 | <20 |
| Uranium | mg/l | <20 | <20 | <20 | <20 | <20 | <20 |
| Plutonium | g/l | 0.328 | 0.341 | 0.566 | 0.518 | 0.464 | 0.377 |
| Americium | g/l | 0.0409 | 0.0436 | 0.0431 | 0.0426 | 0.0537 | 0.0467 |



LA-UR-15-21567

| Sample ID: | | EVDS042596B1 | EVDS050696B1 | EVDS050896A1 |
|---|---|---|---|---|
| Drum | | 55364/77/78/79 | 55380/81 | 55379/80 |
| Assay Date | | May-96 | May-96 | May-96 |
| Element | Units | | | |
| Aluminum | mg/l | - | - | - |
| Silver | mg/l | <1 | <1 | <1 |
| Arsenic | mg/l | <5 | <5 | <5 |
| Barium | mg/l | 16 | 15 | 14 |
| Beryllium | mg/l | 263 | 37 | 90 |
| Calcium | mg/l | 48000 | 45000 | 51000 |
| Cadmium | mg/l | <1 | 160 | 23 |
| Chromium | mg/l | 3200 | 4900 | 4200 |
| Iron | mg/l | 14000 | 20000 | 15000 |
| Mercury | mg/l | <5 | <5 | <5 |
| Potassium | mg/l | - | - | - |
| Magnesium | mg/l | 63000 | 69000 | 69000 |
| Sodium | mg/l | 2200 | 1500 | 4200 |
| Nickel | mg/l | 2100 | 3100 | 2300 |
| Lead | mg/l | 230 | 40 | 140 |
| Selenium | mg/l | <25 | <25 | <25 |
| Thallium | mg/l | <20 | <20 | <20 |
| Uranium | mg/l | <20 | <20 | <20 |
| Plutonium | g/l | - | - | - |
| Americium | g/l | - | - | - |



LA-UR-15-21567

Appendix 4 - HOT DISTILLATE

| Sample ID | | 11EVDIST1BF1 | 2EVDIST14AF1 | 2EVDIST15BF1 | 2EVDIST16AF1 | 3EVDIST20BF1 | 3EVDIST28BF1 |
|---|---|---|---|---|---|---|---|
| Drum # | | 55307 | 55323/26 | 55323/26 | 55321/24 | 55331/32 | 55334 |
| Assay Date | | Nov-94 | Feb-95 | Feb-95 | Feb-95 | Mar-95 | Mar-95 |
| Element | Units | | | | | | |
| Aluminum | mg/l | - | 1700 | 1400 | 700 | 430 | 3800 |
| Silver | mg/l | <10 | <1 | <1 | <1 | <1 | <1 |
| Arsenic | mg/l | <50 | 15 | <5 | <5 | <5 | <5 |
| Barium | mg/l | 70 | 29 | 25 | 11 | 6.5 | 44 |
| Beryllium | mg/l | 15 | 80 | 37 | 16 | 7.7 | 11 |
| Calcium | mg/l | - | 11000 | 64000 | 2400 | 2200 | 31000 |
| Cadmium | mg/l | <10 | 3 | <1 | <1 | <1 | <1 |
| Chromium | mg/l | 5700 | 6200 | 2900 | 1100 | 1600 | 3400 |
| Iron | mg/l | 23000 | 21000 | 13000 | 5100 | 6300 | 13000 |
| Mercury | mg/l | <50 | <5 | <5 | <5 | <5 | <5 |
| Potassium | mg/l | - | 7700 | 6800 | 2900 | 470 | 13000 |
| Magnesium | mg/l | - | 14000 | 8400 | 2900 | 2600 | 35000 |
| Sodium | mg/l | - | 3900 | 2500 | 1700 | 200 | 6400 |
| Nickel | mg/l | 4000 | 2700 | 1900 | 670 | 1100 | 2800 |
| Lead | mg/l | 300 | 150 | 56 | 51 | 14 | 120 |
| Selenium | mg/l | <80 | <8 | <8 | <8 | <8 | <8 |
| Thallium | mg/l | - | <20 | <20 | <20 | <20 | <20 |
| Uranium | mg/l | <200 | <20 | <20 | <20 | <20 | <20 |
| Plutonium | g/l | 2.520 | 0.728 | 0.290 | 0.159 | 0.163 | 1.540 |
| Americium | g/l | 0.0602 | 0.0228 | 0.0131 | 0.0062 | 0.0034 | 0.0233 |



LA-UR-15-21567

Appendix 4 - HOT DISTILLATE

| Sample ID | | 3EVDIST29BF1 | 3EVDIST31BF1 | 4EVDIST12BF1B | 4EVDIST21BF1A | 4EVDIST21BF1B | 4EVDIST25BF1 |
|---|---|---|---|---|---|---|---|
| Drum # | | 55334 | 55333/34 | 55337/39/43 | 55341 | 55341 | 55343 |
| Assay Date | | Mar-95 | Apr-95 | Apr-95 | Apr-95 | Apr-95 | Apr-95 |
| Element | Units | | | | | | |
| Aluminum | mg/l | 8100 | 3500 | 1700 | 5300 | 8400 | 5700 |
| Silver | mg/l | <1 | <1 | <1 | <1 | <1 | <1 |
| Arsenic | mg/l | <5 | <5 | <5 | <5 | <5 | <5 |
| Barium | mg/l | 55 | 30 | 17 | 19 | 32 | 24 |
| Beryllium | mg/l | 14 | 21 | 4.7 | 900 | 1400 | 940 |
| Calcium | mg/l | 41000 | 18000 | 21000 | 34000 | 63000 | 38000 |
| Cadmium | mg/l | <1 | <1 | <1 | <1 | <1 | <1 |
| Chromium | mg/l | 5700 | 4400 | 3600 | 3000 | 5000 | 3600 |
| Iron | mg/l | 25000 | 17000 | 15000 | 14000 | 24000 | 17000 |
| Mercury | mg/l | <5 | <5 | <5 | <5 | <5 | <5 |
| Potassium | mg/l | 18000 | 9200 | 4800 | 43000 | 62000 | 45000 |
| Magnesium | mg/l | 37000 | 25000 | 36000 | 56000 | 69000 | 57000 |
| Sodium | mg/l | 10000 | 6100 | 1200 | 1900 | 3200 | 2100 |
| Nickel | mg/l | 4300 | 3300 | 2300 | 1800 | 2700 | 2200 |
| Lead | mg/l | 230 | 120 | 25 | 190 | 280 | 180 |
| Selenium | mg/l | <8 | <8 | <25 | <25 | <25 | <25 |
| Thallium | mg/l | <20 | <20 | <20 | <20 | <20 | <20 |
| Uranium | mg/l | <20 | <20 | <20 | <20 | <20 | <20 |
| Plutonium | g/l | 1.900 | 1.290 | 0.383 | 0.438 | 0.920 | 0.553 |
| Americium | g/l | 0.0319 | 0.0242 | 0.0087 | 0.1130 | 0.1610 | 0.1220 |



LA-UR-15-21567

Appendix 4 - HOT DISTILLATE

| Sample ID | | 5EVDIST3BF1 | 5EVDIST4BF1 | 5EVDIST8BF1 | 5EVDIST24BF1 | 7EVDIST17BF1 | EVDIS091395A1 |
|---|---|---|---|---|---|---|---|
| Drum # | | 55342/44 | 55344/45 | 55346/47 | 55346 | 55346 | 55353 |
| Assay Date | | May-95 | May-95 | May-95 | Jul-95 | Jul-95 | Sep-95 |
| Element | Units | | | | | | |
| Aluminum | mg/l | 1100 | 660 | 1000 | 2700 | 1400 | 3000 |
| Silver | mg/l | <1 | <1 | <1 | <1 | <1 | <1 |
| Arsenic | mg/l | <5 | <5 | <5 | <5 | <5 | <5 |
| Barium | mg/l | 6 | 3.3 | 3 | 10 | 7.5 | 19 |
| Beryllium | mg/l | 150 | 72 | 81 | 110 | 49 | 150 |
| Calcium | mg/l | 7900 | 3900 | 7600 | 32000 | 17000 | 48000 |
| Cadmium | mg/l | <1 | <1 | <1 | <1 | <1 | <1 |
| Chromium | mg/l | 1200 | 890 | 1200 | 2900 | 1900 | 3400 |
| Iron | mg/l | 5200 | 3800 | 5000 | 11000 | 7100 | 14000 |
| Mercury | mg/l | <5 | <5 | <5 | <5 | <5 | <5 |
| Potassium | mg/l | 9900 | 6100 | 9800 | 30000 | 16000 | 31000 |
| Magnesium | mg/l | 13000 | 7000 | 17000 | 56000 | 25000 | 69000 |
| Sodium | mg/l | 1000 | 300 | 430 | 1000 | 420 | 3600 |
| Nickel | mg/l | 760 | 500 | 740 | 1700 | 1000 | 1800 |
| Lead | mg/l | 58 | 33 | 75 | 180 | 81 | 150 |
| Selenium | mg/l | <25 | <25 | <25 | <25 | <25 | <25 |
| Thallium | mg/l | <20 | <20 | <20 | <20 | <20 | <20 |
| Uranium | mg/l | <20 | <20 | <20 | <20 | <20 | <20 |
| Plutonium | g/l | 0.384 | 0.057 | 0.120 | 0.742 | 0.258 | 0.502 |
| Americium | g/l | 0.0276 | 0.0179 | 0.0330 | 0.0625 | 0.0324 | 0.0819 |



LA-UR-15-21567

Appendix 4 - HOT DISTILLATE

| Sample ID | | EVDIS092595B1 | EVDIS092795B1 | EVDIS100495A | EVDIS100695B1 | EVDIS101095A1 | EVDIS101995A1 |
|---|---|---|---|---|---|---|---|
| Drum # | | 55350 | 55351/52 | 55349/50 | 55349 | 55354 | 55355 |
| Assay Date | | Oct-95 | Oct-95 | Oct-95 | Oct-95 | Oct-95 | Oct-95 |
| Element | Units | | | | | | |
| Aluminum | mg/l | 3800 | 2200 | 930 | 1800 | 890 | 770 |
| Silver | mg/l | <1 | <1 | <1 | <1 | <1 | 1 |
| Arsenic | mg/l | <5 | <5 | <5 | <5 | <5 | <5 |
| Barium | mg/l | 23 | 14 | 11 | 15 | 9 | 10 |
| Beryllium | mg/l | 57 | 35 | 14 | 190 | 9 | 22 |
| Calcium | mg/l | 47000 | 25000 | 9900 | 27000 | 10000 | 8400 |
| Cadmium | mg/l | <1 | <1 | <1 | <1 | <1 | <1 |
| Chromium | mg/l | 6100 | 3700 | 2500 | 2800 | 1800 | 1700 |
| Iron | mg/l | 28000 | 18000 | 11000 | 12000 | 8100 | 7400 |
| Mercury | mg/l | <5 | <5 | <5 | <5 | <5 | <5 |
| Potassium | mg/l | 49000 | 28000 | 11000 | 29000 | 6800 | 9800 |
| Magnesium | mg/l | 66000 | 52000 | 16000 | 39000 | 17000 | 14000 |
| Sodium | mg/l | 1700 | 1000 | 450 | 900 | 470 | 390 |
| Nickel | mg/l | 2800 | 1900 | 1300 | 1500 | 1100 | 1000 |
| Lead | mg/l | 180 | 120 | 44 | 100 | 28 | 38 |
| Selenium | mg/l | <25 | <25 | <25 | <25 | <25 | <25 |
| Thallium | mg/l | <20 | <20 | <20 | <20 | <20 | <20 |
| Uranium | mg/l | <20 | <20 | <20 | <20 | <20 | <20 |
| Plutonium | g/l | 0.562 | 0.380 | 0.211 | 0.366 | 0.188 | 0.155 |
| Americium | g/l | 0.0725 | 0.0441 | 0.0180 | 0.0323 | 0.0130 | 0.0178 |



LA-UR-15-21567

Appendix 4 - HOT DISTILLATE

| Sample ID | | EVDIS101995B1 | EVDIS102395A1 | EVDIS102495B1 | EVDIS122195B1 | EVDIS121895A1 | EVDIS012596B1 |
|---|---|---|---|---|---|---|---|
| Drum # | | 55355 | 55354 | 55357 | 55358 | 55360 | 55361 |
| Assay Date | | Oct-95 | Oct-95 | Oct-95 | Jan-96 | Jan-96 | Jan-96 |
| Element | Units | | | | | | |
| Aluminum | mg/l | 1500 | 400 | 8900 | 5500 | 4300 | 5600 |
| Silver | mg/l | 2 | 1 | <1 | 1.8 | <1 | <1 |
| Arsenic | mg/l | 5 | <5 | <5 | <5 | <5 | <5 |
| Barium | mg/l | 10 | 6 | 30 | 17 | 15 | 17 |
| Beryllium | mg/l | 90 | 9 | 250 | 48 | 23 | 89 |
| Calcium | mg/l | 21000 | 3400 | 33000 | 56000 | 49000 | 43000 |
| Cadmium | mg/l | <1 | <1 | <1 | <1 | <1 | <1 |
| Chromium | mg/l | 2000 | 1000 | 4900 | 3800 | 3300 | 4200 |
| Iron | mg/l | 8400 | 4200 | 21000 | 18000 | 15000 | 18000 |
| Mercury | mg/l | <5 | <5 | <5 | <5 | <5 | <5 |
| Potassium | mg/l | 19000 | 3500 | 27000 | 41000 | 39000 | 48000 |
| Magnesium | mg/l | 32000 | 5100 | 36000 | 110000 | 81000 | 57000 |
| Sodium | mg/l | 1100 | 350 | 19000 | 5200 | 2600 | 3500 |
| Nickel | mg/l | 1200 | 580 | 2600 | 2100 | 1600 | 2100 |
| Lead | mg/l | 64 | 17 | 350 | 180 | 120 | 96 |
| Selenium | mg/l | <25 | <25 | <25 | <25 | <25 | <25 |
| Thallium | mg/l | <20 | <20 | <20 | <20 | <20 | <20 |
| Uranium | mg/l | <20 | <20 | <20 | <20 | <20 | <20 |
| Plutonium | g/l | 0.301 | 0.080 | 1.340 | 0.535 | 0.385 | 0.404 |
| Americium | g/l | 0.0436 | 0.0074 | 0.1020 | 0.0657 | 0.0537 | 0.0499 |



LA-UR-15-21567

Appendix 4 - HOT DISTILLATE

| Sample ID | | EVDIS010996A1 | EVDIS032296A1 | EVDIS032296A2 | EVDIS101896A1 | EVDIS101896A2 | EVDIS040896A1 |
|---|---|---|---|---|---|---|---|
| Drum # | | 55356 | 55369/70 | 55369/70 | | | 55370/71 |
| Assay Date | | Jan-96 | Apr-96 | Apr-96 | Apr-96 | Apr-96 | Apr-96 |
| Element | Units | | | | | | |
| Aluminum | mg/l | 5300 | 16000 | 23000 | 24000 | 24000 | - |
| Silver | mg/l | <1 | <1 | <1 | <1 | <1 | <1 |
| Arsenic | mg/l | 7 | 11 | 13 | 8 | 11 | <5 |
| Barium | mg/l | 15 | 16 | 17 | 17 | 23 | 14 |
| Beryllium | mg/l | 85 | <1 | <1 | - | - | <1 |
| Calcium | mg/l | 41000 | 45000 | 47000 | - | - | 27000 |
| Cadmium | mg/l | <1 | <1 | <1 | <1 | <1 | <1 |
| Chromium | mg/l | 3500 | 3600 | 3000 | 2300 | 2200 | 2000 |
| Iron | mg/l | 15000 | 14000 | 11000 | - | - | 13000 |
| Mercury | mg/l | <5 | <5 | <5 | <5 | <5 | <5 |
| Potassium | mg/l | 47000 | 24000 | 24000 | 26000 | 26000 | - |
| Magnesium | mg/l | 57000 | 52000 | 46000 | - | - | - |
| Sodium | mg/l | 3600 | 3400 | 2700 | 2500 | 2600 | 2200 |
| Nickel | mg/l | 1800 | 2400 | 2100 | 1600 | 1600 | 1100 |
| Lead | mg/l | 94 | 150 | 180 | 170 | 150 | 110 |
| Selenium | mg/l | <25 | <25 | <25 | - | - | <25 |
| Thallium | mg/l | <20 | <20 | <20 | <20 | <20 | <20 |
| Uranium | mg/l | <20 | <20 | <20 | - | - | <20 |
| Plutonium | g/l | 0.369 | 0.483 | 0.486 | - | - | 0.329 |
| Americium | g/l | 0.0442 | 0.1270 | 0.1300 | - | - | 0.0605 |



LA-UR-15-21567

Appendix 4 - HOT DISTILLATE

| Sample ID | | EVDIS032296B2 | EVDIS042296A1 | EVDIS042296A2 | EVDIS041796A1 | EVDIS041696B2 | EVDIS041696B1 |
|---|---|---|---|---|---|---|---|
| Drum # | | 55369 | 55375/76 | 55376/77 | 55375/76 | 55374/75 | 55374/75 |
| Assay Date | | Apr-96 | May-96 | May-96 | May-96 | May-96 | May-96 |
| Element | Units | | | | | | |
| Aluminum | mg/l | 14000 | - | - | - | - | - |
| Silver | mg/l | <1 | <1 | <1 | <1 | <1 | <1 |
| Arsenic | mg/l | <5 | <5 | <5 | <5 | <5 | <5 |
| Barium | mg/l | <1 | 10 | 3 | 12 | 11 | 6 |
| Beryllium | mg/l | <5 | 9 | 2 | 9 | 9 | 6 |
| Calcium | mg/l | 44000 | 26000 | 6700 | 40000 | 43000 | 22000 |
| Cadmium | mg/l | <1 | <1 | <1 | <1 | <1 | <1 |
| Chromium | mg/l | 3700 | 3000 | 1600 | 3900 | 3500 | 1800 |
| Iron | mg/l | 14000 | 14000 | 6500 | 17000 | 19000 | 7600 |
| Mercury | mg/l | <5 | <5 | <5 | <5 | <5 | <5 |
| Potassium | mg/l | 24000 | - | - | - | - | - |
| Magnesium | mg/l | 52000 | 46000 | 11000 | 75000 | 73000 | 38000 |
| Sodium | mg/l | 3700 | 1200 | 200 | 1900 | 2000 | 990 |
| Nickel | mg/l | 2400 | 1700 | 970 | 2500 | 1900 | 970 |
| Lead | mg/l | 150 | 40 | 11 | 57 | 69 | 39 |
| Selenium | mg/l | <25 | <25 | <25 | <25 | <25 | <25 |
| Thallium | mg/l | <20 | <20 | <20 | <20 | <20 | <20 |
| Uranium | mg/l | <20 | <20 | <20 | <20 | <20 | <20 |
| Plutonium | g/l | - | 0.267 | 0.072 | - | - | - |
| Americium | g/l | - | 0.0238 | 0.0061 | - | - | - |



LA-UR-15-21567

Appendix 4 - HOT DISTILLATE

| Sample ID | | EVDIS042596B1 | EVDIS041896A1 | EVDIS043096A1 | EVDIS050396A1 | EVDIS050696B1 | EVDIS050896A1 |
|---|---|---|---|---|---|---|---|
| Drum # | | 55364/77/78/79 | 55376/77 | 55381/82 | 55381/82 | 55380/81 | 55379/80 |
| Assay Date | | May-96 | May-96 | May-96 | May-96 | May-96 | May-96 |
| Element | Units | | | | | | |
| Aluminum | mg/l | - | - | - | - | - | - |
| Silver | mg/l | <1 | <1 | <1 | <1 | <1 | <1 |
| Arsenic | mg/l | <5 | <5 | <5 | <5 | <5 | <5 |
| Barium | mg/l | 8 | 9 | 14 | 11 | 15 | 20 |
| Beryllium | mg/l | 29 | 5 | 230 | 150 | 26 | 35 |
| Calcium | mg/l | 21000 | 21000 | 42000 | 29000 | 43000 | 55000 |
| Cadmium | mg/l | <1 | <1 | <1 | <1 | 160 | 200 |
| Chromium | mg/l | 2500 | 2300 | 3300 | 2500 | 5000 | 6400 |
| Iron | mg/l | 11000 | 10000 | 13000 | 11000 | 20000 | 26000 |
| Mercury | mg/l | <5 | <5 | <5 | <5 | <5 | <5 |
| Potassium | mg/l | - | - | - | - | - | - |
| Magnesium | mg/l | 50000 | 41000 | 61000 | 45000 | 66000 | 72000 |
| Sodium | mg/l | 950 | 1000 | 1900 | 1300 | 1400 | 2100 |
| Nickel | mg/l | 1800 | 1400 | 2400 | 1900 | 3100 | 3800 |
| Lead | mg/l | 48 | 30 | 200 | 130 | 57 | 67 |
| Selenium | mg/l | <25 | <25 | <25 | <25 | <25 | <25 |
| Thallium | mg/l | <20 | <20 | <20 | <20 | <20 | <20 |
| Uranium | mg/l | <20 | <20 | <20 | <20 | <20 | <20 |
| Plutonium | g/l | - | - | - | - | - | - |
| Americium | g/l | - | - | - | - | - | - |



LA-UR-15-21567

Appendix 5 - ATLAS

| Sample ID | | ATL22 | ATLT9B | ATLT10B | ATLT9B2 | ATL14B | ATLLRA23B |
|---|---|---|---|---|---|---|---|
| Drum # | | 55312 | 55321/22 | 55348 | 55321/22 | 55324 | 55321/24 |
| Assay Date | | Aug-94 | Sep-94 | Oct-94 | Nov-94 | Dec-94 | Feb-95 |
| Element | Units | | | | | | |
| Aluminum | mg/l | 1000 | 1300 | 3600 | <5 | - | 2200 |
| Silver | mg/l | - | - | - | <1 | - | <1 |
| Arsenic | mg/l | <5 | <5 | <5 | <5 | <10 | <5 |
| Barium | mg/l | 24 | 32 | 46 | <1 | 120 | 37 |
| Beryllium | mg/l | 32 | 910 | 220 | 200 | <2 | 5 |
| Calcium | mg/l | 2100 | 14000 | 8100 | 22000 | 9100 | 11000 |
| Cadmium | mg/l | 6 | 16 | 18 | <1 | 3 | <1 |
| Chromium | mg/l | 870 | 6000 | 6200 | 9000 | 1600 | 2100 |
| Iron | mg/l | 4100 | 30000 | 34000 | 54000 | 31000 | 13000 |
| Mercury | mg/l | <5 | - | <5 | <5 | - | <5 |
| Potassium | mg/l | 3800 | 17000 | 26000 | 1800 | - | 8100 |
| Magnesium | mg/l | 2300 | 12000 | 13000 | 17000 | 3500 | 12000 |
| Sodium | mg/l | 10000 | 9500 | 11000 | 14000 | 13000 | 1700 |
| Nickel | mg/l | 610 | 3000 | 4500 | 4300 | 1600 | 1300 |
| Lead | mg/l | 66 | 160 | 250 | 190 | <10 | 220 |
| Selenium | mg/l | <8 | <8 | <8 | <8 | <20 | <8 |
| Thallium | mg/l | <20 | <20 | <20 | <20 | <40 | <20 |
| Uranium | mg/l | - | - | 3800 | 2600 | 3100 | <20 |
| Plutonium | g/l | 1.990 | 0.383 | 0.117* | 0.224 | 1.660 | 0.905 |
| Americium | g/l | 0.0210 | 0.1080 | 0.1315* | 0.1360 | 0.0545 | 0.0228 |

*avg. of more than one assay



LA-UR-15-21567

| Sample ID | | ATL12794B | ATLDS11EFB3 | ATLLRA23B1 | ATLDS11EFB1 | ATLDS11EFB4 | ATLDS11EFB6 |
|---|---|---|---|---|---|---|---|
| Drum # | | 55326 | 55325/28 | 55327/28 | 55327/28 | 55327/29 | 55327/29 |
| Assay Date | | Mar-95 | Mar-95 | Mar-95 | Mar-95 | Mar-95 | Mar-95 |
| Element | Units | | | | | | |
| Aluminum | mg/l | 610 | 6700 | 4000 | 2000 | 6400 | 5500 |
| Silver | mg/l | <1 | <1 | <1 | <1 | <1 | <1 |
| Arsenic | mg/l | <5 | <5 | <5 | <5 | <5 | <5 |
| Barium | mg/l | 19 | 29 | 42 | 27 | 8 | 53 |
| Beryllium | mg/l | 8 | 2 | 18 | 10 | <1 | 1 |
| Calcium | mg/l | 1800 | 58000 | 14000 | 33000 | 29000 | 31000 |
| Cadmium | mg/l | <1 | <1 | <1 | <1 | <1 | <1 |
| Chromium | mg/l | 700 | 2600 | 2200 | 1300 | 1100 | 1900 |
| Iron | mg/l | 3000 | 11000 | 15000 | 5800 | 4600 | 6000 |
| Mercury | mg/l | <5 | <5 | <5 | <5 | <5 | <5 |
| Potassium | mg/l | 7200 | 33000 | 31000 | 17000 | 15000 | 13000 |
| Magnesium | mg/l | 26000 | 37000 | 15000 | 44000 | 47000 | 41000 |
| Sodium | mg/l | 72000 | 2000 | 3400 | 3200 | 550 | 11000 |
| Nickel | mg/l | 460 | 1400 | 1800 | 1000 | 920 | 1000 |
| Lead | mg/l | 36 | 56 | 340 | 89 | 10 | 72 |
| Selenium | mg/l | <8 | <8 | <8 | <8 | <8 | <8 |
| Thallium | mg/l | <20 | <20 | <20 | <20 | <20 | <20 |
| Uranium | mg/l | <20 | <20 | <20 | <20 | <20 | <20 |
| Plutonium | g/l | 0.449 | 0.089 | 2.110 | 0.287 | 0.039 | 0.398 |
| Americium | g/l | 0.0037 | 0.0178 | 0.0295 | 0.0091 | 0.0078 | 0.0340 |



LA-UR-15-21567

| Sample ID | | ATLDS11EFB2 | ATLDS11F1B2 | ATLDS11F1B1 | ATLT10BS | ATLDS11EF15B | ATLDS11EF15B1 |
|---|---|---|---|---|---|---|---|
| Drum # | | 55331/32 | 55330/31 | 55332 | | 55340/41 | 55335/39 |
| Assay Date | | Mar-95 | Mar-95 | Mar-95 | Apr-95 | Apr-95 | Apr-95 |
| Element | Units | | | | | | |
| Aluminum | mg/l | 8200 | 8400 | 6300 | - | 5800 | 7000 |
| Silver | mg/l | <1 | <1 | <1 | - | <1 | <1 |
| Arsenic | mg/l | <5 | <5 | <5 | - | <5 | <5 |
| Barium | mg/l | 11 | 10 | 12 | - | 11 | 11 |
| Beryllium | mg/l | 1 | 12 | 28 | - | 28 | 29 |
| Calcium | mg/l | 39000 | 29000 | 31000 | - | 38000 | 29000 |
| Cadmium | mg/l | <1 | <1 | <1 | - | <1 | <1 |
| Chromium | mg/l | 1200 | 3000 | 1900 | - | 2900 | 2800 |
| Iron | mg/l | 5500 | 12000 | 11000 | - | 12000 | 12000 |
| Mercury | mg/l | <5 | <5 | <5 | - | <5 | <5 |
| Potassium | mg/l | 19000 | 54000 | 38000 | - | 47000 | 40000 |
| Magnesium | mg/l | 44000 | 30000 | 31000 | - | 38000 | 40000 |
| Sodium | mg/l | 1200 | 1600 | 2300 | - | 1200 | 1500 |
| Nickel | mg/l | 940 | 2100 | 1200 | - | 1700 | 1700 |
| Lead | mg/l | 7 | 84 | 61 | - | 42 | 54 |
| Selenium | mg/l | <8 | <8 | <8 | - | <25 | <25 |
| Thallium | mg/l | <20 | <20 | <20 | - | <20 | <20 |
| Uranium | mg/l | <20 | <20 | <20 | - | <20 | <20 |
| Plutonium | g/l | 0.047 | 0.561 | 0.222 | 0.166 | 2.000 | 0.392 |
| Americium | g/l | 0.0094 | 0.1520 | 0.0907 | 0.1300 | 0.0787 | 0.0598 |



LA-UR-15-21567

| Sample ID | | ATLDS11EF15B2 | ATLDS16B | ATLDS11EF15B3 | ATLDS11EF15B4 |
|---|---|---|---|---|---|
| Drum # | | 55346/47 | 55347 | 55351 | 55350 |
| Assay Date | | Jul-95 | Jul-95 | Oct-95 | Oct-95 |
| Element | Units | | | | |
| Aluminum | mg/l | 8900 | 4800 | 9100 | 5600 |
| Silver | mg/l | <1 | <1 | <1 | <1 |
| Arsenic | mg/l | <5 | <5 | <56 | <5 |
| Barium | mg/l | 6 | <1 | 5 | 14 |
| Beryllium | mg/l | 140 | 97 | 130 | 270 |
| Calcium | mg/l | 32000 | 24000 | 32000 | 24000 |
| Cadmium | mg/l | <1 | <1 | <1 | <1 |
| Chromium | mg/l | 3200 | 2900 | 3200 | 2800 |
| Iron | mg/l | 16000 | 12000 | 17000 | 13000 |
| Mercury | mg/l | <5 | <5 | <5 | <5 |
| Potassium | mg/l | 48000 | 48000 | 52000 | 36000 |
| Magnesium | mg/l | 51000 | 43000 | 52000 | 43000 |
| Sodium | mg/l | 2700 | 3000 | 2900 | 7000 |
| Nickel | mg/l | 2000 | 1900 | 2000 | 1900 |
| Lead | mg/l | 48 | 280 | 52 | 60 |
| Selenium | mg/l | <25 | <25 | <25 | <25 |
| Thallium | mg/l | <20 | <20 | <20 | <20 |
| Uranium | mg/l | <20 | <20 | <20 | <20 |
| Plutonium | g/l | 0.263 | 0.611 | 0.472 | 0.632 |
| Americium | g/l | 0.0983 | 0.1400 | 0.0941 | 0.0662 |



LA-UR-15-21567

# ATTACHMENT 1

Los Alamos
Los Alamos National Laboratory
Los Alamos, New Mexico 87545

# memorandum

TO: Gerald Veazey, NMT-2

DATE: September 5, 1996

FROM: Gary Tietjen and Rick Picard G.T.

MAIL STOP/TELEPHONE: F-600/7-6247

SYMBOL: TSA-1:96-232

SUBJECT: ESTIMATES FOR ELEMENTAL CONCENTRATIONS UNDER CENSORING

You have shown us a number of assays for different elements. Some of these are "censored" (i.e. some of the values are not known because they are below detection limit) while others are complete. You have asked for some way of summarizing censored data. You are interested in the population of measurements (ppm or g/l) that would have been observed were it not for the censoring. This requires some knowledge of the probability distribution of the measurements. A few minutes work with the data shows that the greater part of it will be lognormally distributed, although some of it may be normal. This is common for ppm data.

A quick way of determining the approximate distribution is to do a normal probability plot. If the data are lognormally distributed, the logs of the data will be approximately linear on a normal probability plot. Formal statistical tests for normality exist if you are interested. Also, we can supply you with normal probability paper if you like. If the distribution of the measurements is lognormal, we can make some point estimates (e.g. mean and standard deviation) or construct an interval estimate (e.g. a confidence interval on the mean of the population) based on the logs of the data which are normally distributed. This may require the use of censoring techniques. We can then exponentiate the endpoints of the normal interval to give us an interval in the relevant scale (ppm).

When you have a set of data with no censoring, you still need to get a distribution so that an appropriate interval can be constructed. For light to moderate censoring you need some censoring techniques. We have worked a couple of examples. We consider first plutonium from Hot Distillate. There are 36 measurements (the Excel program is not reliable in counting) with no censored observations. We did a normal probability plot with the result shown as Figure 1. If the data were normal they would fall approximately along a straight line. These data clearly are not normal. A log transformation gives us Figure 2 which is approximately normal, i.e. the data are lognormally distributed. We can calculate an interval (confidence interval or tolerance interval) on the normally distributed data, then exponentiate the limits of the interval to give us an interval on the raw data (ppm).

We are concerned about the number of decimal places shown for the plutonium data (1,2,3,4). Such a procedure should give the same number of decimal places. The number, 0.2, for example, has to be some kind of approximation; we are not likely to get three zeros (.2000) there. Likewise We are concerned about the measurements for

mercury and arsenic. All the less-than values are less than 5 except one which is less than 50. There is no point in trying to measure the smaller values if you sometimes measure only values above 50. Perhaps this is a transcription error. The same thing occurs with Selenium only there it is 8 and 80. These appear to be transcription errors: putting the 5 or 8 in the wrong column.

The Calcium data for Hot Distillate (Fig 3) presents a very different picture. With the exception of a few very low and one very high observation, the data are approximately normal and an interval can be calculated directly. Common transformations such as taking logs, square roots, or powers of the data doesn't make it any more normal. The low values of Calcium seem to be outliers. Are they off an order of magnitude? Were the corresponding processsing conditions highly unusual?

The beryllium data for Hot Distillate will be used to illustrate maximum likelihood estimation from the attached paper by Cohen. There are 4 censored observations and 42 uncensored. A probability plot of the uncensored observations shows that they certainly are not normal(Fig 4). Taking logs of the data show that they are approximately lognormal (Fig 5). We calculate the mean and variance of the logs of the uncensored data (3.656 and 2.271). Since we are working with logs, the log of the detection limit (1) is zero, i.e. $x_0$=0. The fraction censored is h = 4/46 =.09. Calculate $\gamma$ = .17 =variance/$(x-x_0)^2$. Enter Table 2 of the attached paper to get $\lambda$=.10961 (interpolating). Use Equation 2 to modify our estimates of the mean and variance to 3.255 and 3.736.

Once you have estimates of the mean and variance of the logs, you can calculate intervals. For beryllium, a one-sided tolerance interval that contains 95% of the logged data with 90% confidence is $x+1.986s$ = 6.84. Exponentiating this, we get 932.38 as a tolerance interval on ppm of future beryllium data. Only 4% of the sample values exceed this number which is about right. If some of the data spread is attributable to processing variation, the validity of future predictions will depend on past processing being representative of future processing.

Having considered cases with no censoring and light censoring, let us think about the cases with very heavy censoring such as arsenic for Hot Distillate. There are 41 values with 34 of them (83%) censored (below 5 ppm). When the censoring is so extreme, it is very difficult to assess any distributional assumptions. We should report that 83% of the sampled values were under 5 ppm. Putting a 95% confidence interval on the population percentage less than 5 ppm, we can say that between 79% and 98% of the population values for arsenic will be below 5 ppm. There are several things that can be done beyond this, but one is on rather shaky ground with so much of the information missing. You can *assume* a normal or lognormal distribution, then use Cohen's method for up to 90% censoring. If the observations from a normal distribution are ranked in ascending order, the observations are "order-statistics", and their expected values have been tabulated so that each observation will, on the average, fall k standard deviations from the mean. Two or more of the tabled values can be used to obtain estimates of the mean and standard deviation of a normal distribution.

Please let us know if you have questions regarding this memo or other aspects of dealing with censored data.

Cy: R. R. Picard, TSA-1, MS F600
Author File
TSA-1 File

Figure 1: Plutonium, Hot Distillate

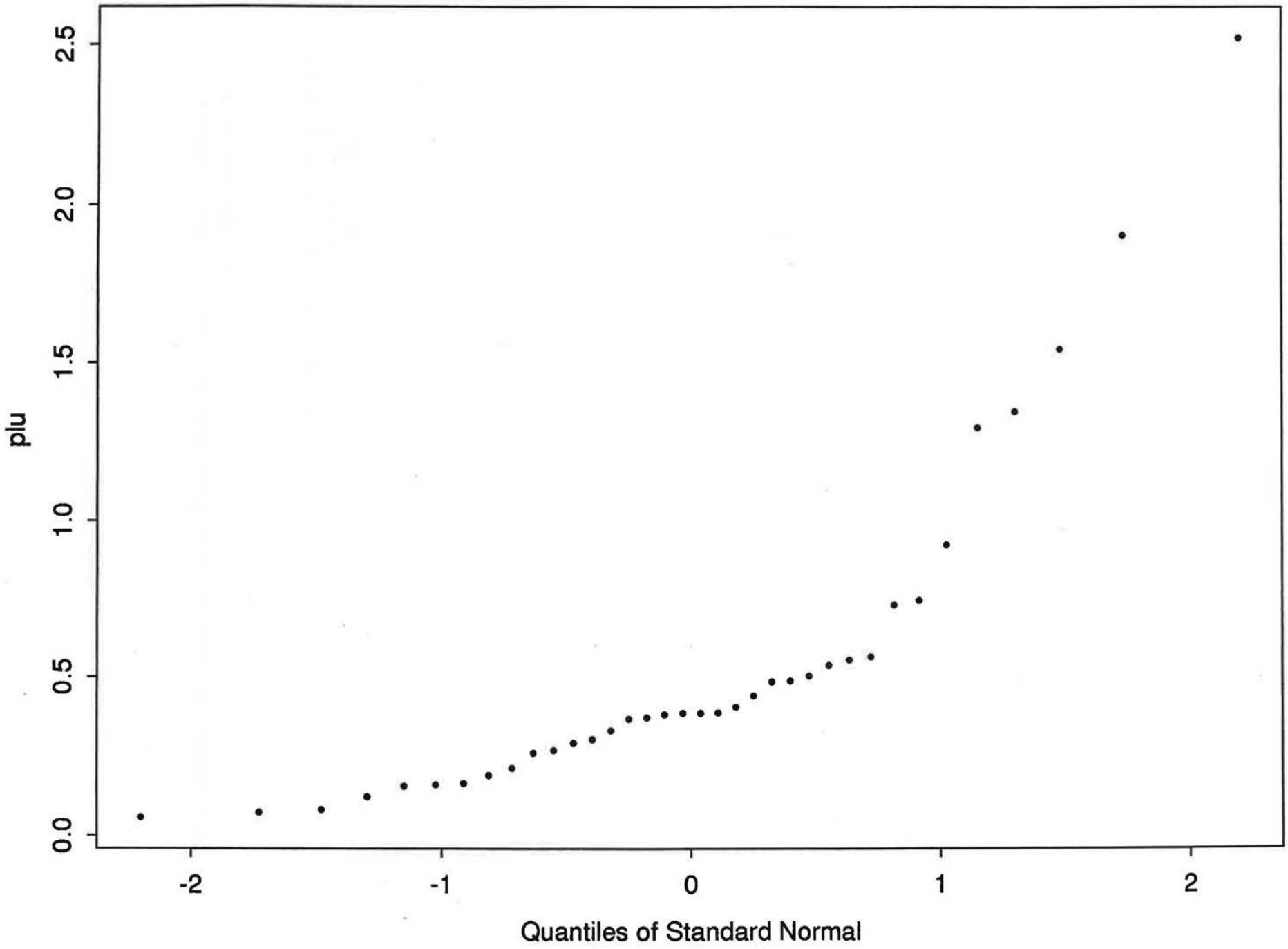

# Figure 2: Log Plutonium, Hot Distillate

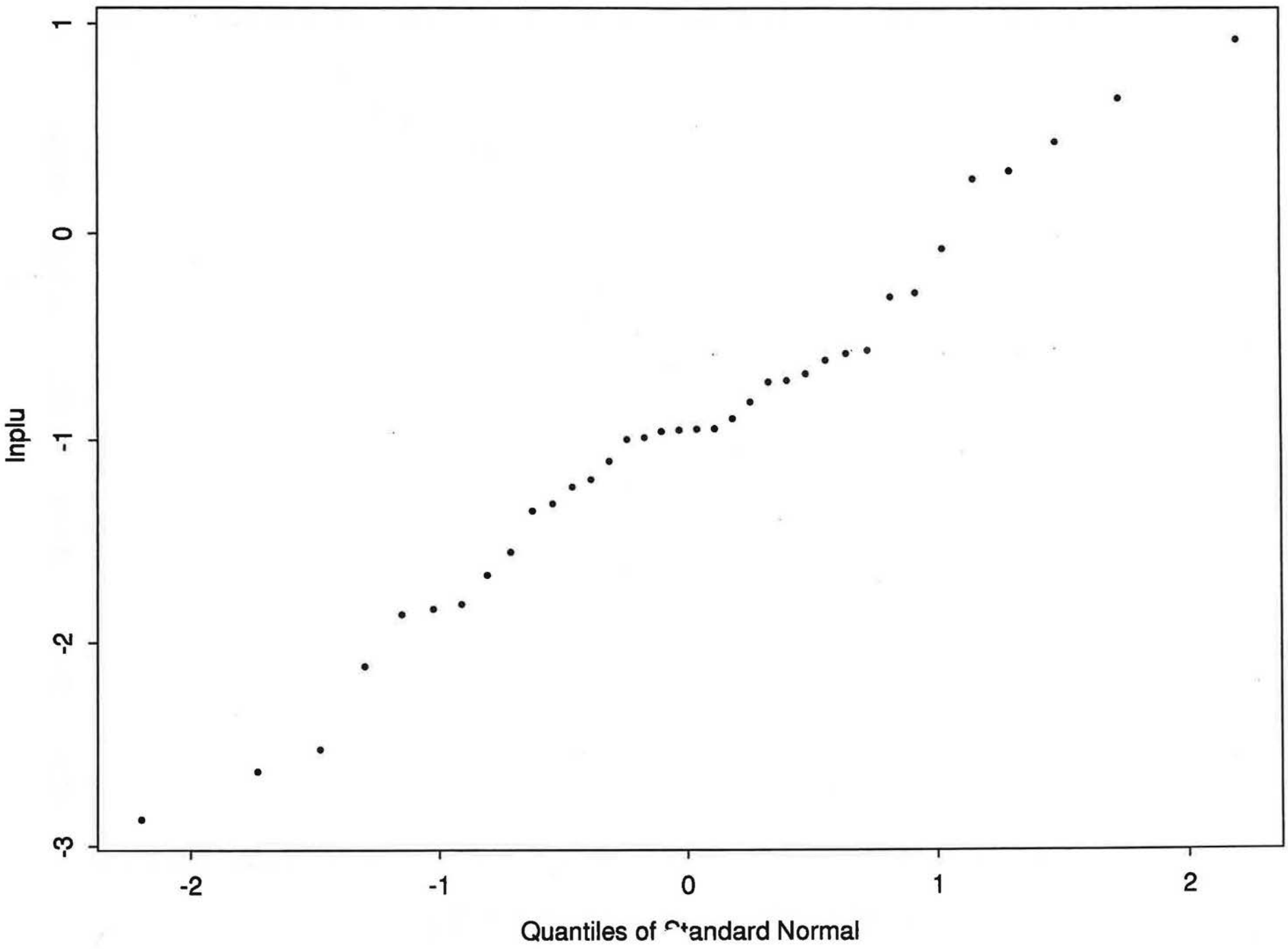

# Figure 3: Calcium, Hot Distillate

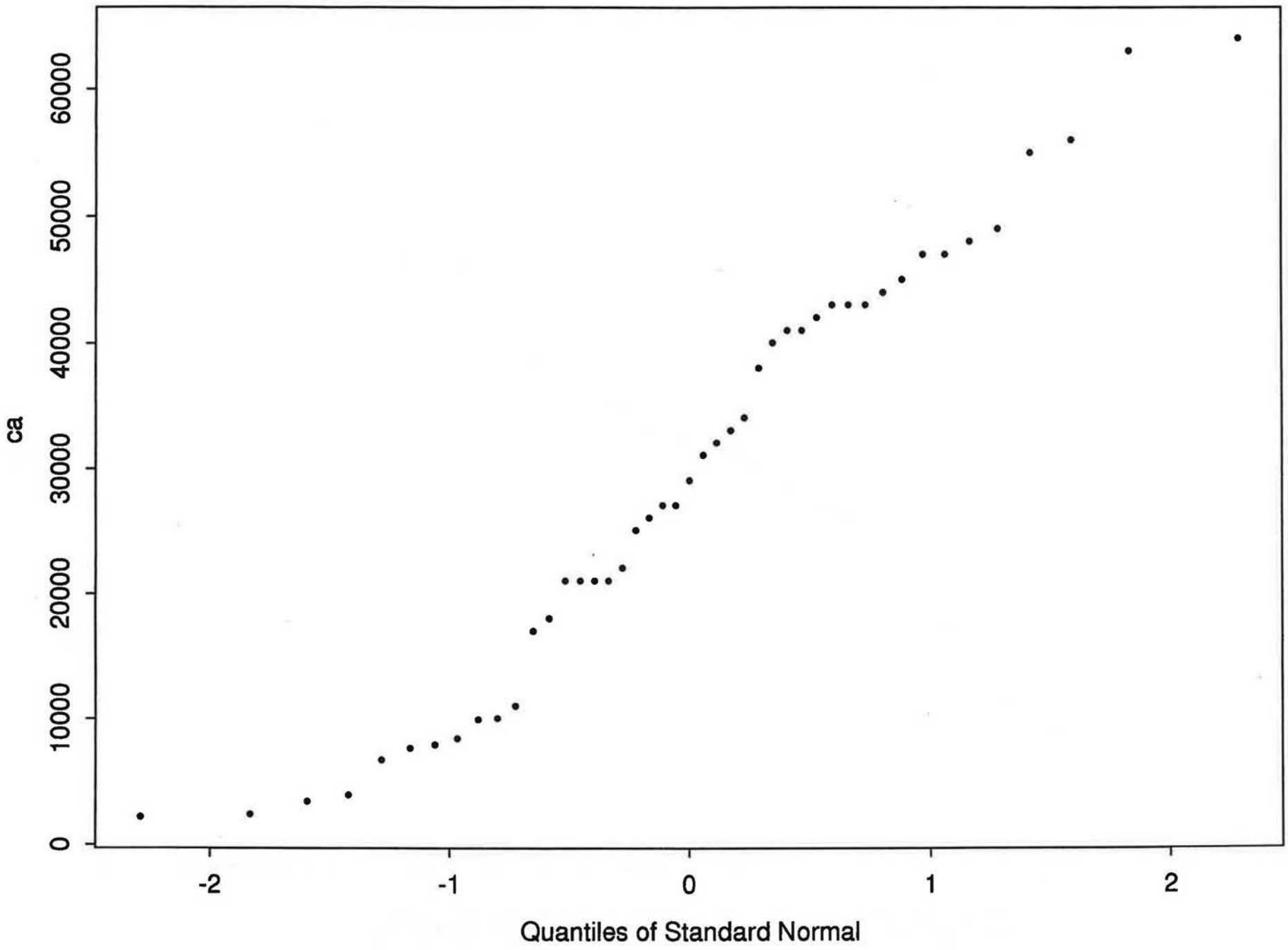

# Figure 4: Beryllium, Hot Distillate

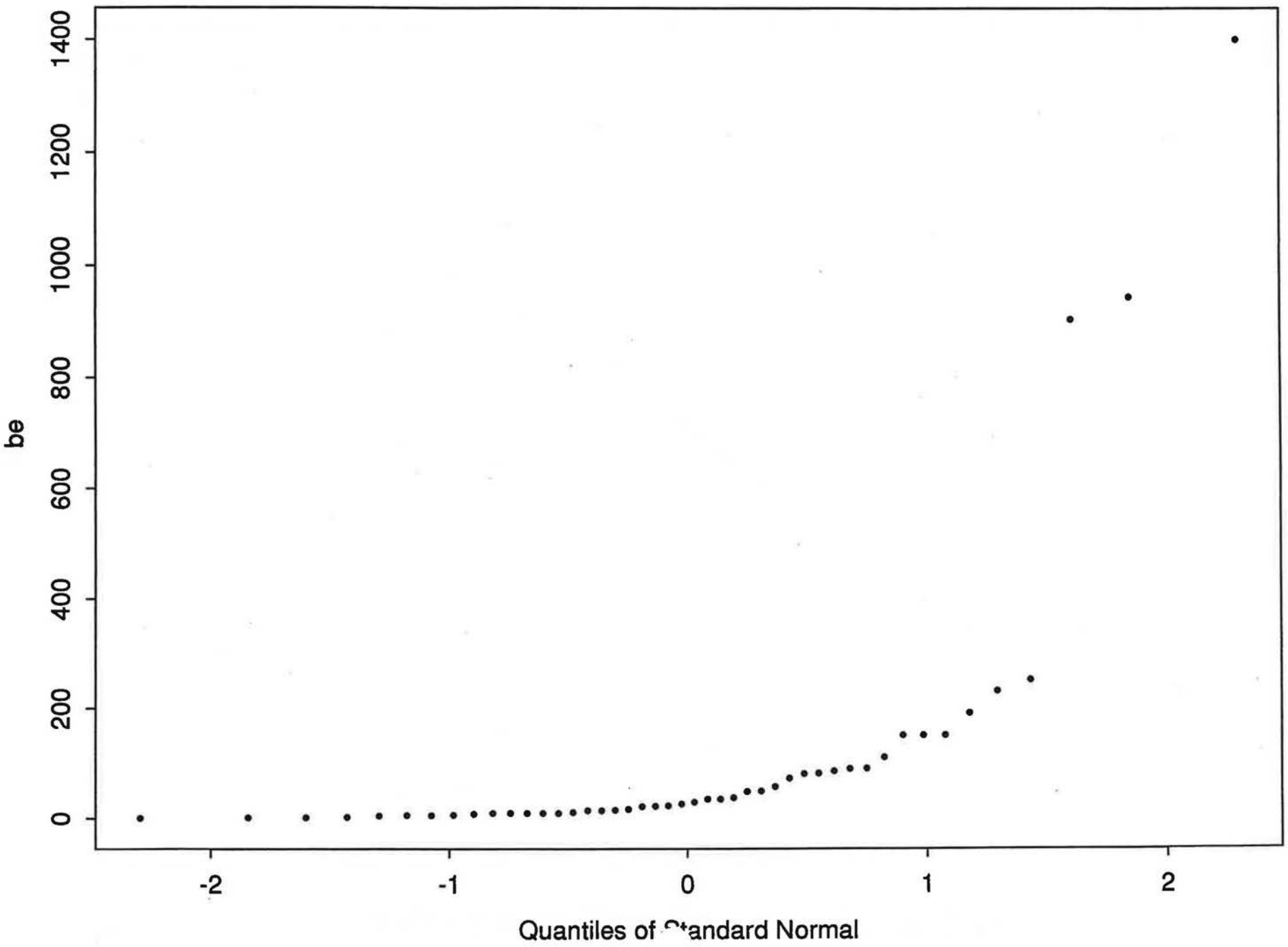

Figure 5: Log Beryllium, Hot Distillate

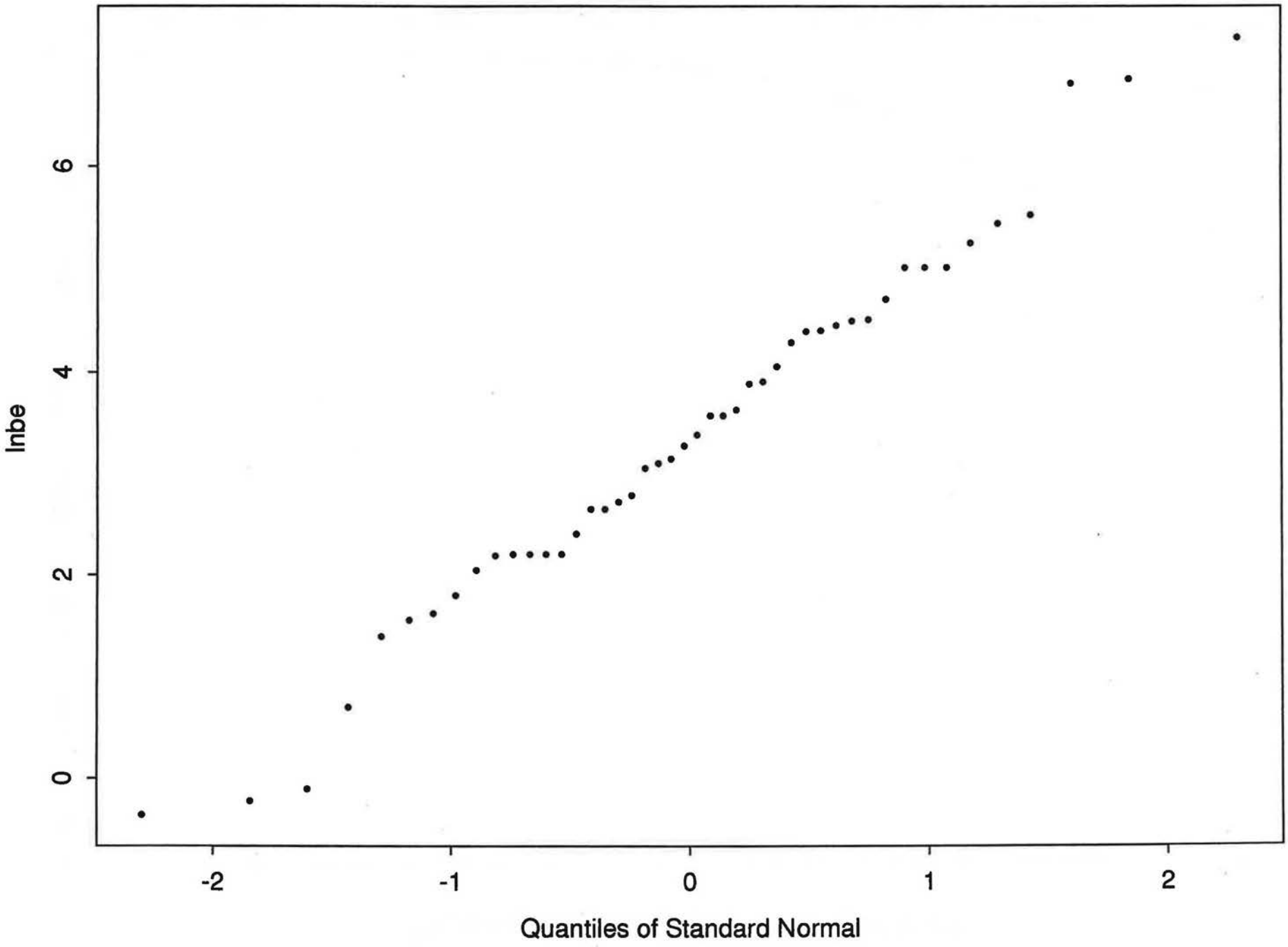

with the solution $y_1 = 59.8331$, $y_2 = -8.5661$ and $\lambda^2 = 1.98$. When the side $y_1 = 30.4$ is studied, $\lambda^2 = 1.09$ and with the side $y_2 = 76.0$, $\lambda^2 = .81$ which represents the smallest ellipsoid of the form $\mathbf{y}\Sigma^{-1}\mathbf{y}'$ which can be inscribed within the tolerances.

This method can easily be generalized to handle any number of dimensions.

What you have is type I single Censoring (the cutoff point $x_0$ is fixed in advance); in Type II it is a random variable. In Truncation a fixed proportion of the sample is not known.

The mean and variance are given by equation 2, next page, Get $\lambda$ from Table 2. $h$ is the observed proportion that are ~~measured~~ censored. $x_0$ is the detection limit. First calculate $\bar{x}$ and $s^2$, the mean and variance of the "known" measurements. Next, calculate $\hat{\gamma} = \frac{s^2}{(\bar{x} - x_0)^2}$, and enter Table 2 with $h$ and $\hat{\gamma}$ to get $\lambda$. Then update your estimates with Eqn. 2.

VOL. 3, NO. 4 TECHNOMETRICS NOVEMBER, 1961

# Tables for Maximum Likelihood Estimates: Singly Truncated and Singly Censored Samples*

A. CLIFFORD COHEN, JR.
*The University of Georgia*

In a previous paper in Technometrics, Vol. 1, 1959, the author derived the maximum liklihood estimates of the mean and variance for simply truncated or simply censored samples drawn from a Normal distribution. This paper extends considerably the tables originally published, and contains a further worked example.

Maximum likelihood estimators presented in the August 1959 issue of this journal [1] for the mean and variance of a normal distribution when samples are singly truncated or singly censored, involved only one auxiliary estimating function with each of these sample types. Estimates as well as their asymptotic variances are relatively easy to calculate when the necessary tables are available, but unfortunately the tables originally provided failed to prove adequate in all cases. The present paper constitutes a response to numerous requests for a more complete tabulation of the pertinent functions.

Our concern is with singly truncated samples and with singly censored samples of both types I and II when the random variable is normal $(\mu, \sigma)$. For all samples under consideration, $N$ designates the total number of sample specimens, and $n$ the number whose measurements are known. These three sample types are more completely described as follows:

*Singly Truncated Samples.* In samples of this type, a terminus $x_0$ is specified. Observation is possible only if $x \geq x_0$, in which case truncation is said to be *on the left*, or if $x \leq x_0$, in which case truncation is said to be *on the right*. In this case, measurements are known for all sample specimens and hence $N = n$. In certain applications it might be preferable to consider that the restriction (i.e. truncation) is imposed on the distribution rather then on the sample being observed. The adoption of this latter point of view involves no change in the estimators.

*Type I Singly Censored Samples.* As in the singly truncated samples, a terminus $x_0$ is specified, but in this case sample specimens whose measurement fall in the restricted interval of the random variable may be identified and thus counted, though not otherwise measured. When the restricted (censored) interval consists of all values $x < x_0$, censoring is said to occur *on the left*. When the censored interval consists of all values $x > x_0$, censoring is said to be *on the right*. The remaining specimens for which $x \geq x_0$ or $(x \leq x_0)$ are fully measured without restriction. Samples of this type thus consist of $N$ observations of which $n$ are fully measured and $N - n$ are censored with $N$ being fixed and $n$ a random variable.

LA-UR-15-21567

*Type II Singly Censored Samples.* In samples of this type, full measurement is made only for the $n$ largest observations in which case censoring is *on the left* or for the $n$ smallest observations in which case censoring is *on the right.* Of the remaining $N - n$ censored observations, it is known only that $x < x_n$ or $(x > x_n)$, where $x_n$ is the smallest (or largest) fully measured observation. In samples of this type both $N$ and $n$ are fixed, but $x_n$ is a random variable.

For the convenience of readers who might not have a copy of reference [1] available, the estimators obtained there are repeated below without derivation. The caret (^) serves to distinguish maximum likelihood estimators or estimates from the parameters being estimated.

*Estimators for Singly Truncated Samples*

$$\hat{\mu} = \bar{x} - \hat{\theta}(\bar{x} - x_0), \qquad \hat{\sigma}^2 = s^2 + \hat{\theta}(\bar{x} - x_0)^2. \tag{1}$$

*Estimators for Type I Singly Censored Samples*

$$\hat{\mu} = \bar{x} - \hat{\lambda}(\bar{x} - x_0), \qquad \hat{\sigma}^2 = s^2 + \hat{\lambda}(\bar{x} - x_0)^2. \tag{2}$$

*Estimators for Type II Singly Censored Samples*

$$\hat{\mu} = \bar{x} - \hat{\lambda}(\bar{x} - x_n), \qquad \hat{\sigma}^2 = s^2 + \hat{\lambda}(\bar{x} - x_n)^2. \tag{3}$$

In case of the above cases, $\bar{x}$ and $s^2$ are the mean and variance respectively of the $n$ measured sample observations.

$$\bar{x} = \sum_1^n x_i/n, \qquad s^2 = \sum_1^n (x_i - \bar{x})^2/n. \tag{4}$$

The auxiliary estimating functions $\theta$ and $\lambda$ were defined in [1] in connection with derivations of the above estimators. They are presented here in tables 1 and 2 as functions of $\gamma$ and of $\gamma$ and $h$ respectively where $\gamma = [1 - Z(Z - \xi)]/(Z - \xi)^2$ in the case of truncated samples, and $\gamma = [1 - Y(Y - \xi)]/(Y - \xi)^2$ in the case of censored samples. As defined in [1]

$$Z = \varphi(\xi)/[1 - F(\xi)], \quad \text{and} \quad Y = [h/(1 - h)]\varphi(\xi)/F(\xi),$$

where $F(\xi) = \int_{-\infty}^{\xi} \varphi(t)\, dt$, $\varphi(t) = (\sqrt{2\pi})^{-1} \exp - t^2/2$, and where $\xi = (x_0 - \mu)/\sigma$ in truncated and type I censored samples, while $\xi = (x_n - \mu)/\sigma$ in type II censored samples. In both type I and type II censored samples, $h$ is the proportion of censored observations; i.e. $h = (N - n)/N$.

In Table 1, which applies to truncated samples, $\theta(\gamma)$ is given at equal intervals of 0.001 for the argument $\gamma$, whereas in the original table, these intervals were unequal and somewhat wider. For any given truncated sample, after computing $\hat{\gamma} = s^2/(\bar{x} - x_0)^2$, enter table 1 with $\gamma = \hat{\gamma}$ and interpolate as necessary to obtain $\hat{\theta} = \theta(\hat{\gamma})$. Ordinarily, linear interpolation will be adequate. With $\hat{\theta}$ thus de-



Table 1. AUXILIARY ESTIMATION FUNCTION $\theta$
For Singly Truncated Samples

| Y | .000 | .001 | .002 | .003 | .004 | .005 | .006 | .007 | .008 | .009 | f |
|---|---|---|---|---|---|---|---|---|---|---|---|
| 0.05 | .00000 | .00000 | .00000 | .00001 | .00001 | .00001 | .00001 | .00001 | .00002 | .00002 | 0.0 |
| 0.06 | .00002 | .00003 | .00003 | .00003 | .00004 | .00004 | .00005 | .00006 | .00007 | .00007 | 0.0 |
| 0.07 | .00008 | .00009 | .00010 | .00011 | .00013 | .00014 | .00016 | .00017 | .00019 | .00020 | 0.0 |
| 0.08 | .00022 | .00024 | .00026 | .00028 | .00031 | .00033 | .00036 | .00039 | .00042 | .00045 | 0.0 |
| 0.09 | .00048 | .00051 | .00055 | .00059 | .00063 | .00067 | .00071 | .00075 | .00080 | .00085 | 0.0 |
| 0.10 | .00090 | .00095 | .00101 | .00106 | .00112 | .00118 | .00125 | .00131 | .00138 | .00145 | 0.1 |
| 0.11 | .00153 | .00160 | .00168 | .00176 | .00184 | .00193 | .00202 | .00211 | .00220 | .00230 | 0.1 |
| 0.12 | .00240 | .00250 | .00261 | .00272 | .00283 | .00294 | .00305 | .00317 | .00330 | .00342 | 0.1 |
| 0.13 | .00355 | .00369 | .00382 | .00396 | .00410 | .00425 | .00440 | .00455 | .00470 | .00486 | 0.1 |
| 0.14 | .00503 | .00519 | .00536 | .00553 | .00571 | .00589 | .00608 | .00627 | .00646 | .00665 | 0.1 |
| 0.15 | .00685 | .00705 | .00726 | .00747 | .00769 | .00791 | .00813 | .00835 | .00858 | .00882 | 0.1 |
| 0.16 | .00906 | .00930 | .00955 | .00980 | .01006 | .01032 | .01058 | .01085 | .01112 | .01140 | 0.1 |
| 0.17 | .01168 | .01197 | .01226 | .01256 | .01286 | .01316 | .01347 | .01378 | .01410 | .01443 | 0.1 |
| 0.18 | .01476 | .01509 | .01543 | .01577 | .01611 | .01646 | .01682 | .01718 | .01755 | .01792 | 0.1 |
| 0.19 | .01830 | .01868 | .01907 | .01946 | .01986 | .02026 | .02067 | .02108 | .02150 | .02193 | 0.1 |
| 0.20 | .02236 | .02279 | .02323 | .02368 | .02413 | .02458 | .02504 | .02551 | .02599 | .02647 | 0.2 |
| 0.21 | .02695 | .02744 | .02794 | .02844 | .02895 | .02946 | .02998 | .03050 | .03103 | .03157 | 0.2 |
| 0.22 | .03211 | .03266 | .03322 | .03378 | .03435 | .03492 | .03550 | .03609 | .03668 | .03728 | 0.2 |
| 0.23 | .03788 | .03849 | .03911 | .03973 | .04036 | .04100 | .04165 | .04230 | .04296 | .04362 | 0.2 |
| 0.24 | .04429 | .04497 | .04565 | .04634 | .04704 | .04774 | .04845 | .04917 | .04989 | .05062 | 0.2 |
| 0.25 | .05136 | .05211 | .05286 | .05362 | .05439 | .05516 | .05594 | .05673 | .05753 | .05834 | 0.2 |
| 0.26 | .05915 | .05997 | .06080 | .06163 | .06247 | .06332 | .06418 | .06504 | .06591 | .06679 | 0.2 |
| 0.27 | .06768 | .06858 | .06948 | .07039 | .07131 | .07224 | .07317 | .07412 | .07507 | .07603 | 0.2 |
| 0.28 | .07700 | .07797 | .07896 | .07995 | .08095 | .08196 | .08298 | .08401 | .08504 | .08609 | 0.2 |
| 0.29 | .08714 | .08820 | .08927 | .09035 | .09144 | .09254 | .09364 | .09476 | .09588 | .09701 | 0.2 |
| 0.30 | .09815 | .09930 | .10046 | .10163 | .10281 | .10400 | .10520 | .10641 | .10762 | .10885 | 0.3 |
| 0.31 | .1101 | .1113 | .1126 | .1138 | .1151 | .1164 | .1177 | .1190 | .1203 | .1216 | 0.3 |
| 0.32 | .1230 | .1243 | .1257 | .1270 | .1284 | .1298 | .1312 | .1326 | .1340 | .1355 | 0.3 |
| 0.33 | .1369 | .1383 | .1398 | .1413 | .1428 | .1443 | .1458 | .1473 | .1488 | .1503 | 0.3 |
| 0.34 | .1519 | .1534 | .1550 | .1566 | .1582 | .1598 | .1614 | .1630 | .1647 | .1663 | 0.3 |
| 0.35 | .1680 | .1697 | .1714 | .1731 | .1748 | .1765 | .1782 | .1800 | .1817 | .1835 | 0.3 |
| 0.36 | .1853 | .1871 | .1889 | .1907 | .1926 | .1944 | .1963 | .1982 | .2001 | .2020 | 0.3 |
| 0.37 | .2039 | .2058 | .2077 | .2097 | .2117 | .2136 | .2156 | .2176 | .2197 | .2217 | 0.3 |
| 0.38 | .2238 | .2258 | .2279 | .2300 | .2321 | .2342 | .2364 | .2385 | .2407 | .2429 | 0.3 |
| 0.39 | .2451 | .2473 | .2495 | .2517 | .2540 | .2562 | .2585 | .2608 | .2631 | .2655 | 0.3 |
| 0.40 | .2678 | .2702 | .2726 | .2750 | .2774 | .2798 | .2822 | .2847 | .2871 | .2896 | 0.4 |
| 0.41 | .2921 | .2947 | .2972 | .2998 | .3023 | .3049 | .3075 | .3102 | .3128 | .3155 | 0.4 |
| 0.42 | .3181 | .3208 | .3235 | .3263 | .3290 | .3318 | .3346 | .3374 | .3402 | .3430 | 0.4 |
| 0.43 | .3459 | .3487 | .3516 | .3545 | .3575 | .3604 | .3634 | .3664 | .3694 | .3724 | 0.4 |
| 0.44 | .3755 | .3785 | .3816 | .3847 | .3878 | .3910 | .3941 | .3973 | .4005 | .4038 | 0.4 |
| 0.45 | .4070 | .4103 | .4136 | .4169 | .4202 | .4236 | .4269 | .4303 | .4338 | .4372 | 0.4 |
| 0.46 | .4407 | .4442 | .4477 | .4512 | .4547 | .4583 | .4619 | .4655 | .4692 | .4728 | 0.4 |
| 0.47 | .4765 | .4802 | .4840 | .4877 | .4915 | .4953 | .4992 | .5030 | .5069 | .5108 | 0.4 |
| 0.48 | .5148 | .5187 | .5227 | .5267 | .5307 | .5348 | .5389 | .5430 | .5471 | .5513 | 0.4 |
| 0.49 | .5555 | .5597 | .5639 | .5682 | .5725 | .5768 | .5812 | .5856 | .5900 | .5944 | 0.4 |
| 0.50 | .5989 | .6034 | .6079 | .6124 | .6170 | .6216 | .6263 | .6309 | .6356 | .6404 | 0.5 |
| 0.51 | .6451 | .6499 | .6547 | .6596 | .6645 | .6694 | .6743 | .6793 | .6843 | .6893 | 0.5 |
| 0.52 | .6944 | .6995 | .7046 | .7098 | .7150 | .7202 | .7255 | .7308 | .7361 | .7415 | 0.5 |
| 0.53 | .7469 | .7524 | .7578 | .7633 | .7689 | .7745 | .7801 | .7857 | .7914 | .7972 | 0.5 |
| 0.54 | .8029 | .8087 | .8146 | .8204 | .8263 | .8323 | .8383 | .8443 | .8504 | .8565 | 0.5 |
| 0.55 | .8627 | .8689 | .8751 | .8813 | .8876 | .8940 | .9004 | .9068 | .9133 | .9198 | 0.5 |
| 0.56 | .9264 | .9330 | .9396 | .9463 | .9530 | .9598 | .9666 | .9735 | .9804 | .9874 | 0.5 |
| 0.57 | .9944 | 1.001 | 1.009 | 1.016 | 1.023 | 1.030 | 1.037 | 1.045 | 1.052 | 1.060 | 0.5 |
| 0.58 | 1.067 | 1.075 | 1.082 | 1.090 | 1.097 | 1.105 | 1.113 | 1.121 | 1.129 | 1.137 | 0.5 |
| 0.59 | 1.145 | 1.153 | 1.161 | 1.169 | 1.177 | 1.185 | 1.194 | 1.202 | 1.211 | 1.219 | 0.5 |
| 0.60 | 1.228 | 1.236 | 1.245 | 1.254 | 1.262 | 1.271 | 1.280 | 1.289 | 1.298 | 1.307 | 0.6 |
| 0.61 | 1.316 | 1.328 | 1.335 | 1.344 | 1.353 | 1.363 | 1.373 | 1.382 | 1.392 | 1.402 | 0.6 |
| 0.62 | 1.411 | 1.421 | 1.431 | 1.441 | 1.451 | 1.461 | 1.472 | 1.482 | 1.492 | 1.503 | 0.6 |
| 0.63 | 1.513 | 1.524 | 1.534 | 1.545 | 1.556 | 1.567 | 1.578 | 1.589 | 1.600 | 1.611 | 0.6 |
| 0.64 | 1.622 | 1.634 | 1.645 | 1.657 | 1.668 | 1.680 | 1.692 | 1.704 | 1.716 | 1.728 | 0.6 |
| 0.65 | 1.740 | 1.752 | 1.764 | 1.777 | 1.789 | 1.802 | 1.814 | 1.827 | 1.840 | 1.853 | 0.6 |
| 0.66 | 1.866 | 1.879 | 1.892 | 1.905 | 1.919 | 1.932 | 1.946 | 1.960 | 1.974 | 1.988 | 0. |
| 0.67 | 2.002 | 2.016 | 2.030 | 2.044 | 2.059 | 2.073 | 2.088 | 2.103 | 2.118 | 2.133 | 0. |
| 0.68 | 2.148 | 2.163 | 2.179 | 2.194 | 2.210 | 2.225 | 2.241 | 2.257 | 2.273 | 2.290 | 0. |
| 0.69 | 2.306 | 2.322 | 2.339 | 2.356 | 2.373 | 2.390 | 2.407 | 2.424 | 2.441 | 2.459 | 0. |
| 0.70 | 2.477 | 2.495 | 2.512 | 2.531 | 2.549 | 2.567 | 2.586 | 2.605 | 2.623 | 2.643 | 0. |
| 0.71 | 2.662 | 2.681 | 2.701 | 2.720 | 2.740 | 2.760 | 2.780 | 2.800 | 2.821 | 2.842 | 0. |
| 0.72 | 2.863 | 2.884 | 2.905 | 2.926 | 2.948 | 2.969 | 2.991 | 3.013 | 3.036 | 3.058 | 0. |
| 0.73 | 3.081 | 3.104 | 3.127 | 3.150 | 3.173 | 3.197 | 3.221 | 3.245 | 3.270 | 3.295 | 0. |
| 0.74 | 3.319 | 3.344 | 3.369 | 3.394 | 3.420 | 3.446 | 3.472 | 3.498 | 3.525 | 3.551 | 0. |
| 0.75 | 3.579 | 3.606 | 3.634 | 3.662 | 3.690 | 3.718 | 3.747 | 3.776 | 3.805 | 3.834 | 0. |
| 0.76 | 3.864 | 3.894 | 3.924 | 3.955 | 3.986 | 4.017 | 4.048 | 4.080 | 4.112 | 4.144 | 0. |
| 0.77 | 4.177 | 4.210 | 4.243 | 4.277 | 4.311 | 4.345 | 4.380 | 4.415 | 4.450 | 4.485 | 0. |
| 0.78 | 4.52 | 4.56 | 4.60 | 4.63 | 4.67 | 4.71 | 4.75 | 4.79 | 4.82 | 4.86 | 0. |
| 0.79 | 4.90 | 4.94 | 4.99 | 5.03 | 5.07 | 5.11 | 5.15 | 5.20 | 5.24 | 5.28 | 0. |
| 0.80 | 5.33 | 5.37 | 5.42 | 5.46 | 5.51 | 5.56 | 5.61 | 5.65 | 5.70 | 5.74 | 0. |
| 0.81 | 5.80 | 5.85 | 5.90 | 5.95 | 6.01 | 6.06 | 6.11 | 6.17 | 6.22 | 6.28 | 0. |
| 0.82 | 6.33 | 6.39 | 6.45 | 6.50 | 6.56 | 6.62 | 6.68 | 6.74 | 6.81 | 6.87 | 0. |
| 0.83 | 6.93 | 7.00 | 7.06 | 7.13 | 7.19 | 7.26 | 7.33 | 7.40 | 7.47 | 7.54 | 0. |
| 0.84 | 7.61 | 7.68 | 7.76 | 7.83 | 7.91 | 7.98 | 8.06 | 8.14 | 8.22 | 8.30 | 0. |
| 0.85 | 8.39 | 8.47 | 8.55 | 8.64 | 8.73 | 8.82 | 8.91 | 9.00 | 9.09 | 9.18 | 0. |

LA-UR-15-21567

Table 2. AUXILIARY ESTIMATION FUNCTION $\lambda(h,\gamma)$
For Singly Censored Samples

| $\gamma$ \ $h$ | .01 | .02 | .03 | .04 | .05 | .06 | .07 | .08 | .09 | .10 | .15 | .20 | $h$ / $\gamma$ |
|---|---|---|---|---|---|---|---|---|---|---|---|---|---|
| .00 | .010100 | .020400 | .030902 | .041583 | .052507 | .063627 | .074953 | .086488 | .09824 | .11020 | .17342 | .24268 | .00 |
| .05 | .010551 | .021294 | .032225 | .043350 | .054670 | .066189 | .077909 | .089834 | .10197 | .11431 | .17935 | .25033 | .05 |
| .10 | .010950 | .022082 | .033398 | .044902 | .056596 | .068483 | .080568 | .092852 | .10534 | .11804 | .18479 | .25741 | .10 |
| .15 | .011310 | .022798 | .034466 | .046318 | .058356 | .070586 | .083009 | .095629 | .10845 | .12148 | .18985 | .26405 | .15 |
| .20 | .011642 | .023459 | .035453 | .047629 | .059990 | .072539 | .085280 | .098216 | .11135 | .12469 | .19460 | .27031 | .20 |
| .25 | .011952 | .024076 | .036377 | .048858 | .061522 | .074372 | .087413 | .10065 | .11408 | .12772 | .19910 | .27626 | .25 |
| .30 | .012243 | .024658 | .037249 | .050016 | .062969 | .076106 | .089433 | .10295 | .11667 | .13059 | .20338 | .28193 | .30 |
| .35 | .012520 | .025211 | .038077 | .051120 | .064345 | .077756 | .091355 | .10515 | .11914 | .13333 | .20747 | .28737 | .35 |
| .40 | .012784 | .025738 | .038866 | .052173 | .065660 | .079332 | .093193 | .10725 | .12150 | .13595 | .21139 | .29260 | .40 |
| .45 | .013038 | .026243 | .039824 | .053182 | .066921 | .080845 | .094958 | .10926 | .12377 | .13847 | .21517 | .29765 | .45 |
| .50 | .013279 | .026728 | .040352 | .054153 | .068135 | .082301 | .096657 | .11121 | .12595 | .14090 | .21882 | .30253 | .50 |
| .55 | .013513 | .027196 | .041054 | .055089 | .069306 | .083708 | .098298 | .11308 | .12806 | .14325 | .22235 | .30725 | .55 |
| .60 | .013739 | .027649 | .041733 | .055995 | .070439 | .085068 | .099887 | .11490 | .13011 | .14552 | .22578 | .31184 | .60 |
| .65 | .013958 | .028087 | .042391 | .056874 | .071538 | .086388 | .10143 | .11666 | .13209 | .14773 | .22910 | .31630 | .65 |
| .70 | .014171 | .028513 | .043030 | .057726 | .072605 | .087670 | .10292 | .11837 | .13402 | .14987 | .23234 | .32065 | .70 |
| .75 | .014378 | .028927 | .043652 | .058556 | .073643 | .088917 | .10438 | .12004 | .13590 | .15196 | .23550 | .32489 | .75 |
| .80 | .014579 | .029330 | .044258 | .059364 | .074855 | .090133 | .10580 | .12167 | .13773 | .15400 | .23858 | .32903 | .80 |
| .85 | .014775 | .029723 | .044848 | .060153 | .075842 | .091319 | .10719 | .12325 | .13952 | .15599 | .24158 | .33307 | .85 |
| .90 | .014967 | .030107 | .045425 | .060923 | .076606 | .092477 | .10854 | .12480 | .14126 | .15793 | .24452 | .33703 | .90 |
| .95 | .015154 | .030483 | .045989 | .061676 | .077549 | .093611 | .10987 | .12632 | .14297 | .15983 | .24740 | .34091 | .95 |
| 1.00 | .015338 | .030850 | .046540 | .062413 | .078471 | .094720 | .11118 | .12780 | .14465 | .16170 | .25022 | .34471 | 1.00 |

| $\gamma$ \ $h$ | .25 | .30 | .35 | .40 | .45 | .50 | .55 | .60 | .65 | .70 | .80 | .90 | $h$ / $\gamma$ |
|---|---|---|---|---|---|---|---|---|---|---|---|---|---|
| .00 | .31862 | .4021 | .4941 | .5961 | .7098 | .8368 | .9808 | 1.145 | 1.336 | 1.561 | 2.176 | 3.283 | .00 |
| .05 | .32793 | .4130 | .5066 | .6101 | .7252 | .8540 | .9994 | 1.166 | 1.358 | 1.585 | 2.203 | 3.314 | .05 |
| .10 | .33662 | .4233 | .5184 | .6234 | .7400 | .8703 | 1.017 | 1.185 | 1.379 | 1.608 | 2.229 | 3.345 | .10 |
| .15 | .34480 | .4330 | .5296 | .6361 | .7542 | .8860 | 1.035 | 1.204 | 1.400 | 1.630 | 2.255 | 3.376 | .15 |
| .20 | .35255 | .4422 | .5403 | .6483 | .7678 | .9012 | 1.051 | 1.222 | 1.419 | 1.651 | 2.280 | 3.405 | .20 |
| .25 | .35993 | .4510 | .5506 | .6600 | .7810 | .9158 | 1.067 | 1.240 | 1.439 | 1.672 | 2.305 | 3.435 | .25 |
| .30 | .36700 | .4595 | .5604 | .6713 | .7937 | .9300 | 1.083 | 1.257 | 1.457 | 1.693 | 2.329 | 3.464 | .30 |
| .35 | .37379 | .4676 | .5699 | .6821 | .8060 | .9437 | 1.098 | 1.274 | 1.476 | 1.713 | 2.353 | 3.492 | .35 |
| .40 | .38033 | .4755 | .5791 | .6927 | .8179 | .9570 | 1.113 | 1.290 | 1.494 | 1.732 | 2.376 | 3.520 | .40 |
| .45 | .38665 | .4831 | .5880 | .7029 | .8295 | .9700 | 1.127 | 1.306 | 1.511 | 1.751 | 2.399 | 3.547 | .45 |
| .50 | .39276 | .4904 | .5967 | .7129 | .8408 | .9826 | 1.141 | 1.321 | 1.528 | 1.770 | 2.421 | 3.575 | .50 |
| .55 | .39870 | .4976 | .6051 | .7225 | .8517 | .9950 | 1.155 | 1.337 | 1.545 | 1.788 | 2.443 | 3.601 | .55 |
| .60 | .40447 | .5045 | .6133 | .7320 | .8625 | 1.007 | 1.169 | 1.351 | 1.561 | 1.806 | 2.465 | 3.628 | .60 |
| .65 | .41008 | .5114 | .6213 | .7412 | .8729 | 1.019 | 1.182 | 1.366 | 1.577 | 1.824 | 2.486 | 3.654 | .65 |
| .70 | .41555 | .5180 | .6291 | .7502 | .8832 | 1.030 | 1.195 | 1.380 | 1.593 | 1.841 | 2.507 | 3.679 | .70 |
| .75 | .42090 | .5245 | .6367 | .7590 | .8932 | 1.042 | 1.207 | 1.394 | 1.608 | 1.858 | 2.528 | 3.705 | .75 |
| .80 | .42612 | .5308 | .6441 | .7676 | .9031 | 1.053 | 1.220 | 1.408 | 1.624 | 1.875 | 2.548 | 3.730 | .80 |
| .85 | .43122 | .5370 | .6515 | .7761 | .9127 | 1.064 | 1.232 | 1.422 | 1.639 | 1.892 | 2.568 | 3.754 | .85 |
| .90 | .43622 | .5430 | .6586 | .7844 | .9222 | 1.074 | 1.244 | 1.435 | 1.653 | 1.908 | 2.588 | 3.779 | .90 |
| .95 | .44112 | .5490 | .6656 | .7925 | .9314 | 1.085 | 1.255 | 1.448 | 1.668 | 1.924 | 2.607 | 3.803 | .95 |
| 1.00 | .44592 | .5548 | .6724 | .8005 | .9406 | 1.095 | 1.267 | 1.461 | 1.682 | 1.940 | 2.626 | 3.827 | 1.00 |

For all values $0 \leq \gamma \leq 1$, $\lambda(0,\gamma) = 0$.

In Table 2, which applies to censored samples, $\lambda(h, \gamma)$ is given for $h = 0.01(0.01)$ $0.10(0.05)$ $0.70(0.10)$ $0.90$ and for $\gamma = 0.00(0.05)$ $1.00$. This represents a considerable enlargement of the original table which was limited to entries for which $h \leq 0.50$. For any given censored sample, after computing $\hat{\gamma} = s^2/(\bar{x} - x_0)^2$ or $\hat{\gamma} = s^2/(\bar{x} - x_n)^2$ and $h = (N - n)/N$, enter table 2 with these values of the two arguments to obtain $\hat{\lambda} = \lambda(h, \hat{\gamma})$ using two-way interpolation. Here again linear interpolation should be sufficiently accurate for most requirements. With $\hat{\lambda}$ thus determined, the required estimates follow from (2) or from (3), the choice of equations depending on sample type.

The asymptotic variances and covariances may be calculated as

$$V(\hat{\mu}) \sim \frac{\sigma^2}{N}\mu_{11}, \qquad \mathrm{Cov}(\hat{\mu}, \hat{\sigma}) \sim \frac{\sigma^2}{N}\mu_{12},$$

$$V(\hat{\sigma}) \sim \frac{\sigma^2}{N}\mu_{22}, \qquad \rho_{\hat{\mu},\hat{\sigma}} \sim \frac{\mu_{12}}{\sqrt{\mu_{11}\mu_{22}}}, \tag{5}$$



where the $\mu_{ij}$ above are so defined that the expressions of (5) equal the corresponding expressions given in [1].

In order to permit ready evaluation of the $\mu_{ij}$ of (5), and thereby simplify the calculation of asymptotic variances and covariances, Table 3 has been added. (Various less extensive tables giving certain of the entries included in Table 3 have previously been published by Bliss [3], Gupta [4], Hald [5], and Cohen and Woodward [2]. Credit for the Bliss tables relating to censored samples, which were the first of these to appear, was inadvertently attributed to W. L. Stevens both by Hald [5] and by the writer [1]. It has recently been learned that while Stevens derived the formulas involved, computation of the tables

Table 3. VARIANCE FACTORS FOR SINGLY TRUNCATED AND SINGLY CENSORED SAMPLES

| $\eta$ | For Truncated Samples | | | | For Censored Samples | | | | Percent Rest. | $\xi$ |
|---|---|---|---|---|---|---|---|---|---|---|
| | $\mu_{11}$ | $\mu_{12}$ | $\mu_{22}$ | $\rho$ | $\mu_{11}$ | $\mu_{12}$ | $\mu_{22}$ | $\rho$ | | |
| -4.0 | 1.00054 | -.001143 | .502287 | -.001613 | 1.00000 | -.000006 | .500030 | -.000001 | 0.00 | -4.0 |
| -3.5 | 1.00313 | -.005922 | .510366 | -.008277 | 1.00001 | -.000052 | .500208 | -.000074 | 0.02 | -3.5 |
| -3.0 | 1.01460 | -.024153 | .536283 | -.032744 | 1.00010 | -.000335 | .501180 | -.000473 | 0.13 | -3.0 |
| -2.5 | 1.05738 | -.081051 | .602029 | -.101586 | 1.00056 | -.001712 | .505280 | -.002407 | 0.62 | -2.5 |
| -2.4 | 1.07437 | -.101368 | .622786 | -.123924 | 1.00078 | -.002312 | .506935 | -.003247 | 0.82 | -2.4 |
| -2.3 | 1.09604 | -.126136 | .646862 | -.149303 | 1.00107 | -.003099 | .509030 | -.004341 | 1.07 | -2.3 |
| -2.2 | 1.12365 | -.156229 | .674663 | -.179434 | 1.00147 | -.004121 | .511658 | -.005757 | 1.39 | -2.2 |
| -2.1 | 1.15880 | -.192688 | .706637 | -.212937 | 1.00200 | -.005438 | .514926 | -.007571 | 1.79 | -2.1 |
| -2.0 | 1.20350 | -.236743 | .743283 | -.250310 | 1.00270 | -.007123 | .518960 | -.009875 | 2.28 | -2.0 |
| -1.9 | 1.26030 | -.289860 | .785158 | -.291398 | 1.00363 | -.009266 | .523899 | -.012778 | 2.87 | -1.9 |
| -1.8 | 1.33246 | -.353771 | .832880 | -.335818 | 1.00485 | -.011971 | .529899 | -.016405 | 3.59 | -1.8 |
| -1.7 | 1.42405 | -.430531 | .887141 | -.383041 | 1.00645 | -.015368 | .537141 | -.020901 | 4.46 | -1.7 |
| -1.6 | 1.54024 | -.522564 | .948713 | -.432293 | 1.00852 | -.019610 | .545827 | -.026431 | 5.48 | -1.6 |
| -1.5 | 1.68750 | -.632733 | 1.01846 | -.482644 | 1.01120 | -.024884 | .556186 | -.033181 | 6.68 | -1.5 |
| -1.4 | 1.87398 | -.764405 | 1.09734 | -.533054 | 1.01467 | -.031410 | .568471 | -.041358 | 8.08 | -1.4 |
| -1.3 | 2.10982 | -.921533 | 1.18642 | -.582464 | 1.01914 | -.039460 | .582981 | -.051193 | 9.68 | -1.3 |
| -1.2 | 2.40764 | -1.10974 | 1.28690 | -.629889 | 1.02488 | -.049355 | .600046 | -.062937 | 11.51 | -1.2 |
| -1.1 | 2.78311 | -1.33145 | 1.40009 | -.674498 | 1.03224 | -.061491 | .620049 | -.076861 | 13.57 | -1.1 |
| -1.0 | 3.25557 | -1.59594 | 1.52746 | -.715676 | 1.04168 | -.076345 | .643438 | -.093252 | 15.87 | -1.0 |
| -0.9 | 3.84879 | -1.90952 | 1.67064 | -.753044 | 1.05376 | -.094501 | .670724 | -.112407 | 18.41 | -0.9 |
| -0.8 | 4.59189 | -2.28066 | 1.83140 | -.786452 | 1.06923 | -.116674 | .702513 | -.134620 | 21.19 | -0.8 |
| -0.7 | 5.52036 | -2.71911 | 2.01172 | -.815942 | 1.08904 | -.143744 | .739515 | -.160175 | 24.20 | -0.7 |
| -0.6 | 6.67730 | -3.23612 | 2.21376 | -.841703 | 1.11442 | -.176798 | .782574 | -.189317 | 27.43 | -0.6 |
| -0.5 | 8.11482 | -3.84458 | 2.43990 | -.864019 | 1.14696 | -.217183 | .832691 | -.222233 | 30.85 | -0.5 |
| -0.4 | 9.89562 | -4.55921 | 2.69271 | -.883229 | 1.18876 | -.266577 | .891077 | -.259011 | 34.46 | -0.4 |
| -0.3 | 12.0949 | -5.39683 | 2.97504 | -.899688 | 1.24252 | -.327080 | .959181 | -.299607 | 38.21 | -0.3 |
| -0.2 | 14.8023 | -6.37653 | 3.28997 | -.913744 | 1.31180 | -.401326 | 1.03877 | -.343800 | 42.07 | -0.2 |
| -0.1 | 18.1244 | -7.51996 | 3.64083 | -.925727 | 1.40127 | -.492641 | 1.13198 | -.391156 | 46.02 | -0.1 |
| 0.0 | 22.1875 | -8.85155 | 4.03126 | -.935932 | 1.51709 | -.605233 | 1.24145 | -.441013 | 50.00 | 0.0 |
| 0.1 | 27.1403 | -10.3988 | 4.46517 | -.944623 | 1.66743 | -.744459 | 1.37042 | -.492483 | 53.98 | 0.1 |
| 0.2 | 33.1573 | -12.1927 | 4.94678 | -.952028 | 1.86310 | -.917165 | 1.52288 | -.544498 | 57.93 | 0.2 |
| 0.3 | 40.4428 | -14.2679 | 5.48069 | -.958345 | 2.11857 | -1.13214 | 1.70381 | -.595891 | 61.79 | 0.3 |
| 0.4 | 49.2342 | -16.6628 | 6.07169 | -.963742 | 2.45318 | -1.40071 | 1.91942 | -.645504 | 65.54 | 0.4 |
| 0.5 | 59.8081 | -19.4208 | 6.72512 | -.968361 | 2.89293 | -1.73757 | 2.17751 | -.692299 | 69.15 | 0.5 |
| 0.6 | 72.4834 | -22.5896 | 7.44658 | -.972322 | 3.47293 | -2.16185 | 2.48793 | -.735459 | 72.57 | 0.6 |
| 0.7 | 87.6276 | -26.2220 | 8.24204 | -.975727 | 4.24075 | -2.69858 | 2.86318 | -.774443 | 75.80 | 0.7 |
| 0.8 | 105.66 | -30.376 | 9.1178 | -.97866 | 5.2612 | -3.3807 | 3.3192 | -.80899 | 78.81 | 0.8 |
| 0.9 | 127.07 | -35.117 | 10.081 | -.98119 | 6.6229 | -4.2517 | 3.8765 | -.83912 | 81.59 | 0.9 |
| 1.0 | 152.40 | -40.515 | 11.138 | -.98338 | 8.4477 | -5.3696 | 4.5614 | -.86502 | 84.13 | 1.0 |
| 1.1 | 182.29 | -46.650 | 12.298 | -.98529 | 10.903 | -6.8116 | 5.4082 | -.88703 | 86.43 | 1.1 |
| 1.2 | 217.42 | -53.601 | 13.567 | -.98694 | 14.224 | -8.6818 | 6.4616 | -.90557 | 88.49 | 1.2 |
| 1.3 | 258.61 | -61.465 | 14.954 | -.98838 | 18.735 | -11.121 | 7.7804 | -.92109 | 90.32 | 1.3 |
| 1.4 | 306.78 | -70.347 | 16.471 | -.98964 | 24.892 | -14.319 | 9.4423 | -.93401 | 91.92 | 1.4 |
| 1.5 | 362.91 | -80.350 | 18.124 | -.99074 | 33.339 | -18.539 | 11.550 | -.94473 | 93.32 | 1.5 |
| 1.6 | 428.11 | -91.586 | 19.922 | -.99171 | 44.986 | -24.139 | 14.243 | -.95361 | 94.52 | 1.6 |
| 1.7 | 503.57 | -104.17 | 21.874 | -.99256 | 61.132 | -31.618 | 17.706 | -.96097 | 95.54 | 1.7 |
| 1.8 | 591.03 | -118.31 | 24.003 | -.99332 | 83.638 | -41.664 | 22.193 | -.96706 | 96.41 | 1.8 |
| 1.9 | 691.78 | -134.10 | 26.311 | -.99398 | 115.19 | -55.252 | 28.046 | -.97211 | 97.13 | 1.9 |
| 2.0 | 807.71 | -151.73 | 28.813 | -.99457 | 159.66 | -73.750 | 35.740 | -.97630 | 97.72 | 2.0 |
| 2.1 | 940.38 | -171.30 | 31.511 | -.99509 | 222.74 | -99.100 | 45.930 | -.97979 | 98.21 | 2.1 |
| 2.2 | 1091.4 | -192.92 | 34.405 | -.99555 | 312.73 | -134.08 | 59.526 | -.98270 | 98.61 | 2.2 |
| 2.3 | 1265.4 | -217.17 | 37.575 | -.99596 | 441.92 | -182.68 | 77.810 | -.98514 | 98.93 | 2.3 |
| 2.4 | 1458.6 | -243.23 | 40.858 | -.99632 | 628.58 | -250.68 | 102.59 | -.98718 | 99.18 | 2.4 |
| 2.5 | 1677.8 | -271.99 | 44.392 | -.99665 | 899.99 | -346.53 | 136.44 | -.98890 | 99.38 | 2.5 |

When truncation or type I censoring occurs on the left, entries in this table corresponding to $\eta = \xi$ are applicable. For right truncated or type I right censored samples, read entries corresponding to $\eta = -\xi$, but delete negative signs from $\mu_{12}$ and $\rho$. For both type II left censored and type II right censored samples, read entries co[illegible]nding to Percent Restriction = 100h, but for right censoring delete negative signs [illegible] $\mu_{12}$ and $\rho$.

LA-UR-15-21567

was the work of Bliss.) For any given truncated or type I censored sample, after calculating $\hat{\xi} = (x_0 - \hat{\mu})/\hat{\sigma}$, enter the appropriate columns of table 3 with $\hat{\eta} = \hat{\xi}$ if the restriction is on the left or with $\hat{\eta} = -\hat{\xi}$ if the restriction is on the right, and interpolate to obtain the required values of the $\mu_{ij}$. For type II censored samples, enter table 3 through the Percent Restricted column with Percent Restricted = $100h$ and interpolate to obtain the required values of the $\mu_{ij}$. In all cases when restriction is on the left, the negative signs affixed to entries for $\mu_{12}$ and $\rho$ are retained, but are to be deleted for right restricted samples. With the $\mu_{ij}$ thus evaluated, the asymptotic variances and covariances may be approximated using (5) with $\sigma^2$ replaced by its estimate $\hat{\sigma}^2$.

To illustrate the ease with which the tables presented here may be employed in practical situations, we select two examples that were previously considered in [1].

*Left truncated sample.* Data for this sample, which was given in [1] as example 1, are summarized as follows: $\bar{x} = 0.124624$, $s^2 = 2.1106 \times 10^{-6}$, $x_0 = 0.1215$ and $n = 100$. It follows that $\hat{\gamma} = s^2/(\bar{x} - x_0)^2 = 0.21627$ and linear interpolation in table 1 immediately yields $\hat{\theta} = 0.03012$ which is in exact agreement with the value previously obtained in [1]. Using (1), we then compute $\hat{\mu} = 0.1245$, $\hat{\sigma}^2 = 2.405 \times 10^{-6}$, and $\hat{\sigma} = 0.00155$. For the variances and covariance, we enter table 3 with $\hat{\xi} = (x_0 - \hat{\mu})/\hat{\sigma} = -1.94$, and interpolate linearly to obtain $\mu_{11} = 1.2376$, $\mu_{12} = -0.26861$, $\mu_{22} = 0.76841$, and $\rho_{\hat{\mu},\hat{\sigma}} = -0.2750$. Note that $\mu_{12}$ and $\rho_{\hat{\mu},\hat{\sigma}}$ are negative since this sample is left restricted. When these values are substituted into (5), and $\sigma^2$ is replaced by its estimate $\hat{\sigma}^2 = 2.405 \times 10^{-6}$, the variances and covariance follow immediately as $V(\hat{\mu}) \doteq 2.98 \times 10^{-8}$, $V(\hat{\sigma}) \doteq 1.85 \times 10^{-8}$, and Cov $(\hat{\mu}, \hat{\sigma}) \doteq -0.65 \times 10^{-8}$, in agreement with the results obtained in [1]. Here, however, the necessary computational effort has been substantially reduced from that originally required.

*Right Censored Type II Sample.* Data for this sample which was given in [1] as example 6 and which was originally given by Gupta [4], are summarized as: $\bar{x} = 1{,}304.832$, $s^2 = 12{,}128.250$, $x_n = 1{,}450.000$, $N = 300$, and $n = 119$. It follows that $\hat{\gamma} = s^2/(\bar{x} - x_n)^2 = 0.575515$ and $h = 181/300 = 0.6033$. Two-way linear interpolation in table 2 immediately yields $\hat{\lambda} = 1.36$. Using (3), we then compute $\hat{\mu} = 1{,}502$, $\hat{\sigma}^2 = 40{,}789$, and $\hat{\sigma} = 202$. For the variances and covariances, we enter table 3 with Percent Restriction = $100h = 60.33$ and interpolate linearly to obtain $\mu_{11} = 2.022$, $\mu_{12} = 1.051$, $\mu_{22} = 1.635$ and $\rho_{\hat{\mu},\hat{\sigma}} = 0.576$. Note that here $\mu_{12}$ and $\rho_{\hat{\mu},\hat{\sigma}}$ are positive since in this example the restriction is on the right side. Using the values determined above with $\hat{\sigma}^2 = 40{,}789$ substituted for $\sigma^2$, the variances and covariance follow from (5) as $V(\hat{\mu}) \doteq 274.9$, $V(\hat{\sigma}) \doteq 222.3$, and Cov $(\hat{\mu}, \hat{\sigma}) \doteq 142.9$. Except for errors in the signs of $\mu_{12}$, and $\rho_{\hat{\mu},\hat{\sigma}}$ which occur in [1], the results obtained here agree with the more laboriously computed results of the former paper.

The assistance of Mr. Robert Everett and Mr. David Lifsey, who performed most of the computations involved in preparing these tables, is gratefully acknowledged.

## References

1. Cohen, A. C., Jr., "Simplified estimators for the normal distribution when samples are single censored or truncated," *Technometrics*, Vol. 1, (1959), pp. 217–237.



2. Cohen, A. C., Jr., and Woodward, John, "Tables of Pearson-Lee-Fisher functions of truncated normal distributions," *Biometrics*, Vol. 9(1953), pp. 489–97.
3. Bliss, C. I., "The calculation of the time mortality curve," *Ann. Appl. Biol.*, Vol. 24( pp. 815–52.
4. Gupta, A. K., "Estimation of the mean and standard deviation of a normal populatio a censored sample," *Biometrika*, Vol. 39, (1952), pp. 260–73.
5. Hald, A., "Maximum likelihood estimation of the parameters of a normal distri which is truncated at a known point," *Skandinavisk Aktuarietidskrift*, Vol. 32( pp. 119–34.

LA-UR-15-21567

# ATTACHMENT 2

Los Alamos

Los Alamos National Laboratory
Los Alamos, New Mexico 87545

# memorandum

TO: Gerald Veazey, NMT-2

DATE: September 23, 1996

FROM: Gary Tietjen G.T.

MAIL STOP/TELEPHONE: F-600/7-6247

SYMBOL: TSA-1:96-239

SUBJECT: ESTIMATES FOR ELEMENTAL CONCENTRATIONS UNDER CENSORING-2

This memo summarizes the data provided me. In almost all cases the data are lognormally distributed. For this distribution, the median is generally used as a measure that is more characteristic than the mean. In this distribution, the mean can be greatly influenced by a single outlier while the median is resistant to outliers. I have provided, in Tables 1-5, an estimate of the mean and median of the ppm distribution and a 95% confidence interval on the median. Should you want more, you have the mean and standard deviation of the logs of the data from which other measures are constructed.

In this data, care needs to be used with outliers. Much depends on how you intend to use the data. I gathered that most of these are nuisances or contaminants and that low levels were desirable. If that is the case, you will want some upper bound. For that purpose, you may want to keep the outliers. In other cases, say Americium and Plutonium, estimating the mean or median concentration may be the important thing and it then becomes important to identify, then discard the outliers. I recommend normal probability plotting for looking at outliers.

Dealing with censoring can be time consuming. Some of your detection limits are very low, say 1 ppm. The measurement then lies between 0 and 1 ppm. In those cases, substituting .5 ppm will do no harm when most of the measurements are much larger.

Cy: R. R. Picard, TSA-1, MS F600
Author's File
TSA-1 File

Table 1: HOT.CSV

The following have lognormal distributions:

| Element | Sample Mean-ppm | Sample Std. Dev | Mean(log) | Stdev(log) | Population(ppm) Est.Med | Est.Mean | 95% CI on Median | |
|---|---|---|---|---|---|---|---|---|
| Aluminum | 5528.00 | 6709.90 | 7.99 | 1.15 | 2954.31 | 5733.32 | 1989.96 | 4386.01 |
| Barium | 17.22 | 12.90 | 2.62 | 0.68 | 13.79 | 17.36 | 11.30 | 16.83 |
| Chromium | 3158.12 | 1436.47 | 7.95 | 0.50 | 2826.10 | 3196.42 | 2447.04 | 3263.88 |
| Iron+ | 13571.11 | 6133.54 | 9.40 | 0.51 | 12118.47 | 13767.05 | 10413.33 | 14102.81 |
| Potassium | 22793.43 | 16073.10 | 9.68 | 1.02 | 15993.97 | 26843.77 | 11279.64 | 22678.66 |
| Sodium | 2515.96 | 3095.61 | 7.36 | 0.99 | 1574.43 | 2568.98 | 1177.65 | 2104.91 |
| Nickel | 1906.04 | 885.20 | 7.44 | 0.50 | 1700.49 | 1929.73 | 1469.56 | 1967.70 |
| Lead | 112.12 | 78.34 | 4.44 | 0.82 | 84.81 | 118.56 | 66.88 | 107.55 |
| Plutonium | 0.53 | 0.56 | -1.29 | 1.44 | 0.27 | 0.78 | 0.17 | 0.45 |
| Americium | 0.05 | 0.04 | -3.44 | 0.99 | 0.03 | 0.05 | 0.02 | 0.05 |

+One outlier deleted

The following have normal distributions:

| Element | Sample Mean | Sample Std.Dev | Population 95% CI on Mean | |
|---|---|---|---|---|
| Calcium | 29497.78 | 17290.72 | 24306.33 | 34689.22 |
| Magnesium | 41818.18 | 24815.27 | 34278.61 | 49357.76 |

The following have NO measurements above detection limit.

| | |
|---|---|
| Selenium | All measurements below detection limit; Conclude same about population |
| Thallium | All measurements below detection limit; Conclude same about population |
| Uranium | All measurements below detection limit; Conclude same about population |
| Mercury | All measurements below detection limit; Conclude same about population |

The following are moderately censored and lognormally distributed.

| Element | Uncensored Data Mean-ppm | Std. Dev | Censored Estimates Mean(log) | Stdev(log) | Population(ppm) Est.Med | Est.Mean | 95% CI on Median | |
|---|---|---|---|---|---|---|---|---|
| Beryllim | 130.70 | 280.46 | 3.26 | 1.93 | 25.91 | 167.83 | 14.30 | 47.46 |

Very heavy censoring. Assumed lognormal. 95% one-sided CI on percent below detection limit.

Silver 4 uncensored out of 48. Conclusion: At least 82% will be below detection limit.
Arsenic 7 uncensored out of 48. Conclusion: At least 74% will be below detection limit.
Cadmium 3 uncensored out of 48. Conclusion: At least 85% will be below detection limit.

Table 2: DISSOL.CSV

The following have lognormal distributions:

| Element | Sample Mean-ppm | Sample Std. Dev | Mean(log) | Stdev(log) | Population(ppm) Est.Med | Est.Mean | 95% CI on Median | |
|---|---|---|---|---|---|---|---|---|
| Aluminum | 7525.00 | 6003.63 | 8.67 | 0.71 | 5828.09 | 7495.02 | 4585.68 | 7407.12 |
| Barium | 14.86 | 6.58 | 2.61 | 0.44 | 13.55 | 14.95 | 11.84 | 15.50 |
| Chromium+ | 3184.09 | 817.52 | 8.04 | 0.25 | 3088.01 | 3184.87 | 2863.42 | 3330.22 |
| Iron | 17441.67 | 8340.24 | 9.69 | 0.35 | 16219.26 | 17262.06 | 14394.88 | 18274.85 |
| Calcium | 47638.89 | 16466.68 | 10.72 | 0.30 | 45451.43 | 47541.43 | 41070.45 | 50299.74 |
| Potassium | 35305.55 | 11742.03 | 10.42 | 0.35 | 33381.12 | 35439.97 | 29696.97 | 37522.31 |
| Sodium | 3941.11 | 7755.40 | 7.84 | 0.70 | 2528.62 | 3240.57 | 2046.62 | 3124.14 |
| Nickel | 1750.89 | 502.22 | 7.43 | 0.30 | 1679.10 | 1756.08 | 1534.73 | 1837.04 |
| Lead | 172.07 | 119.98 | 4.95 | 0.63 | 141.64 | 172.43 | 117.33 | 170.99 |
| Plutonium | 0.52 | 0.25 | -0.73 | 0.35 | 0.48 | 0.52 | 0.43 | 0.54 |
| Americium | 0.08 | 0.04 | -2.61 | 0.44 | 0.07 | 0.08 | 0.06 | 0.08 |

+One outlier deleted

The following have normal distributions:

| Element | Sample Mean | Sample Std.Dev | Population 95% CI on Mean | |
|---|---|---|---|---|
| Magnesium | 60354.84 | 11870.25 | 56006.68 | 64703.00 |

The following have NO measurements above detection limit.

| | |
|---|---|
| Selenium | All measurements below detection limit; Conclude same about population |
| Thallium | All measurements below detection limit; Conclude same about population |
| Uranium | All measurements below detection limit; Conclude same about population |
| Mercury | All measurements below detection limit; Conclude same about population |

The following are moderately censored and lognormally distributed.

| Element | Uncensored Data Mean-ppm | Std. Dev | Censored Estimates Mean(log) | Stdev(log) | Population(ppm) Est.Med | Est.Mean | 95% CI on Median | |
|---|---|---|---|---|---|---|---|---|
| Beryllium | 212.38 | 319.15 | 3.67 | 2.55 | 39.33 | 140.75 | 15.18 | 101.49 |

Very heavy censoring. Assumed lognormal. 95% one-sided CI on percent below detection limit.

| | |
|---|---|
| Silver | 2 uncensored out of 45. Conclusion: At least 87% will be below detection limit. |
| Arsenic | 7 uncensored out of 42. Conclusion: At least 71% will be below detection limit. |
| Cadmium | 2 uncensored out of 44. Conclusion: At least 86% will be below detection limit. |

Table 3: OXAL.CSV

The following have lognormal distributions:

| Element | Sample Mean-ppm | Sample Std. Dev | Mean(log) | Stdev(log) | Population(ppm) Est.Med | Est.Mean | 95% CI on Median | |
|---|---|---|---|---|---|---|---|---|
| Aluminum | 2800.00 | 1446.84 | 7.83 | 0.54 | 2517.42 | 2909.36 | 1069.53 | 5925.38 |
| Potassium | 16580.00 | 20032.38 | 8.82 | 1.84 | 6767.92 | 36896.11 | 361.19 | 126815.95 |
| Magnesium | 30050.00 | 29586.20 | 9.91 | 1.08 | 20227.45 | 36218.52 | 3630.99 | 112682.56 |
| Calcium | 24250.00 | 15848.50 | 9.86 | 0.82 | 19106.38 | 26743.12 | 8080.18 | 45178.91 |
| Chromium | 2895.00 | 1501.65 | 7.82 | 0.66 | 2478.74 | 3084.21 | 1238.55 | 4960.78 |
| Iron | 18000.00 | 12259.69 | 9.56 | 0.80 | 14150.09 | 19561.58 | 6080.83 | 32927.25 |
| Sodium | 10953.33 | 14682.11 | 8.36 | 1.56 | 4286.68 | 14459.81 | 834.46 | 22021.09 |
| Nickel | 1405.00 | 780.76 | 7.13 | 0.53 | 1244.84 | 1430.71 | 715.60 | 2165.51 |
| Lead | 76.17 | 55.66 | 4.11 | 0.74 | 60.75 | 79.70 | 28.03 | 131.66 |
| Plutonium | 0.71 | 0.37 | -0.48 | 0.64 | 0.62 | 0.76 | 0.31 | 1.21 |
| Americium | 0.03 | 0.02 | -3.68 | 0.87 | 0.03 | 0.04 | 0.01 | 0.06 |

The following have NO measurements above detection limit.

| | |
|---|---|
| Selenium | All measurements below detection limit; Conclude same about population |
| Thallium | All measurements below detection limit; Conclude same about population |
| Mercury | All measurements below detection limit; Conclude same about population |
| Arsenic | All measurements below detection limit; Conclude same about population |
| Silver | All measurements below detection limit; Conclude same about population |

The following are moderately censored and lognormally distributed.

| Element | Uncensored Data Mean-ppm | Std. Dev | Censored Estimates Mean(log) | Stdev(log) | Population(ppm) Est.Med | Est.Mean | 95% CI on Median | |
|---|---|---|---|---|---|---|---|---|
| Barium | 22.40 | 10.50 | 2.22 | 1.89 | 9.21 | 55.32 | 1.26 | 67.20 |
| Beryllium | 44.92 | 40.71 | 1.85 | 2.40 | 6.33 | 113.34 | 0.51 | 78.77 |

Very heavy censoring. Assumed lognormal. 95% one-sided CI on percent below detection limit.
Uranium 1 uncensored out of 6. Conclusion: At least 42% will be below detection limit.
Cadmium 1 uncensored out of 6. Conclusion: At least 42% will be below detection limit.

Table 4: LEAN.CSV
The following have lognormal distributions:

| Element | Sample Mean-ppm | Sample Std. Dev | Mean(log) | Stdev(log) | Population(ppm) Est.Med | Est.Mean | 95% CI on Median | |
|---|---|---|---|---|---|---|---|---|
| Aluminum | 2428.89 | 1436.42 | 7.54 | 0.88 | 1884.92 | 2779.49 | 957.36 | 3711.16 |
| Calcium | 32511.11 | 25667.36 | 9.50 | 2.17 | 13377.42 | 142223.39 | 2514.91 | 71157.66 |
| Chromium | 5393.33 | 3501.04 | 8.06 | 1.46 | 3161.23 | 9138.49 | 1031.44 | 9688.78 |
| Iron | 20843.33 | 13231.30 | 9.46 | 1.37 | 12842.86 | 32687.49 | 4491.10 | 36725.78 |
| Magnesium | 27688.89 | 16707.52 | 9.75 | 1.38 | 17147.72 | 44368.50 | 5941.49 | 49490.03 |
| Sodium | 2377.78 | 1798.46 | 7.58 | 0.63 | 1949.33 | 2384.59 | 1196.58 | 3175.62 |
| Nickel | 2450.00 | 1579.95 | 7.36 | 1.29 | 1565.34 | 3595.48 | 580.89 | 4218.17 |
| Lead | 37.26 | 36.74 | 3.32 | 0.78 | 27.58 | 37.32 | 15.18 | 50.14 |
| Plutonium | 0.648 | 0.402 | -0.698 | 0.878 | 0.498 | 0.732 | 0.276 | 0.898 |
| Americium | 0.012 | 0.008 | -4.624 | 0.722 | 0.010 | 0.013 | 0.006 | 0.016 |

The following have NO measurements above detection limit.

| | |
|---|---|
| Selenium | All measurements below detection limit; Conclude same about population |
| Thallium | All measurements below detection limit; Conclude same about population |
| Uranium | All measurements below detection limit; Conclude same about population |
| Mercury | All measurements below detection limit; Conclude same about population |
| Cadmium | All measurements below detection limit; Conclude same about population |
| Arsenic | All measurements below detection limit; Conclude same about population |
| Silver | All measurements below detection limit; Conclude same about population |

The following are moderately censored; Caution! These sample sizes are small.

| Element | Uncensored Data Mean-ppm | Std. Dev | Censored Estimates Mean(log) | Stdev(log) | Population(ppm) Est.Med | Est.Mean | 95% CI on Median | |
|---|---|---|---|---|---|---|---|---|
| Potassium | 5371.429 | 1209.290 | 6.78 | 2.84 | 880.06 | 49513.46 | 320.53 | 2416.31 |
| Beryllium | 13.300 | 11.620 | 1.29 | 1.73 | 3.63 | 14.302 | 1.00 | 20.69 |
| Barium | 44.429 | 22.142 | 3.12 | 1.000 | 22.64 | 44.515 | 9.21 | 55.70 |

Table 5: ATLAS.CSV (Note here that the EXCEL means did not agree with these!)
The following have lognormal distributions:

| Element | Sample Mean-ppm | Sample Std. Dev | Mean(log) | Stdev(log) | Population(ppm) Est.Med | Est.Mean | 95% CI on Median | |
|---|---|---|---|---|---|---|---|---|
| Aluminum+ | 5150.50 | 2658.84 | 8.34 | 0.78 | 4171.44 | 5634.13 | 2901.96 | 5996.25 |
| Calcium | 24322.73 | 13411.05 | 9.85 | 0.89 | 18924.89 | 27998.77 | 12782.22 | 28019.50 |
| Chromium | 2830.45 | 1956.48 | 7.76 | 0.62 | 2343.95 | 2846.01 | 1778.20 | 3089.69 |
| Iron | 15227.27 | 12098.25 | 9.38 | 0.72 | 11846.47 | 15387.40 | 8596.67 | 16324.79 |
| Magnesium | 31127.27 | 15791.17 | 10.11 | 0.85 | 24634.38 | 35468.10 | 16870.86 | 35970.47 |
| Sodium | 8261.36 | 14871.54 | 8.32 | 1.12 | 4085.66 | 7612.46 | 2491.40 | 6700.10 |
| Nickel | 1783.18 | 1023.75 | 7.34 | 0.55 | 1547.02 | 1799.89 | 1212.10 | 1974.48 |
| Plutonium | 0.637 | 0.651 | -0.960 | 1.105 | 0.383 | 0.705 | 0.238 | 0.618 |
| Americium | 0.068 | 0.049 | -3.101 | 1.085 | 0.045 | 0.081 | 0.028 | 0.072 |
| Potassium | 28138.096 | 16793.342 | 9.960 | 0.920 | 21153.051 | 32300.662 | 13914.816 | 32156.482 |

+One outlier omitted

The following have normal distributions:

| Element | Sample Mean | Sample Std.Dev | Population 95% CI on Mean |
|---|---|---|---|

The following have NO measurements above detection limit.

| | |
|---|---|
| Arsenic | All measurements below detection limit; Conclude same about population |
| Silver | All measurements below detection limit; Conclude same about population |
| Selenium | All measurements below detection limit; Conclude same about population |
| Mercury | All measurements below detection limit; Conclude same about population |
| Thallium | All measurements below detection limit; Conclude same about population |

The following are moderately censored and lognormally distributed.

| | Uncensored Data | | Censored Estimates | | Population(ppm) | | | |
|---|---|---|---|---|---|---|---|---|
| Element | Mean-ppm | Std. Dev | Mean(log) | Stdev(log) | Est.Med | Est.Mean | 95% CI on Median | |
| Barium | 24.18 | 26.05 | 2.62 | 1.32 | 13.67 | 32.67 | 7.62 | 24.55 |
| Beryllium | 109.66 | 200.92 | 3.09 | 2.17 | 21.95 | 230.13 | 8.39 | 57.39 |

Very heavy censoring. Assumed lognormal. 95% one-sided CI on percent below detection limit.
Cadmium 4 uncensored out of 22. Conclusion: At least 63% will be below detection limit.