LANL 3/31/95 TA67

MIXED WASTE DISPOSAL FACILITY

Ted Taylor, Program Manager
DOE Los Alamos Area Office, ES&H

Marty Price, Project Leader
LANL FSS-6 Environmental Management Projects

Tim Sloan, Facility Manager
LANL CST-5

Jack Ellvinger, Principal (RCRA Permitting)
LANL ESH-19

3775

MIXED WASTE DISPOSAL FACILITY

Slide #	Subject
1	Project Scope
2-3	Waste Characterization
4	Waste Treatment Plan
5	Regulatory Drivers
6-8	Site Geology/Hydrology
9	Design Basis and Assumptions
10-22	Facility Plans and Details
23	RCRA Permitting Overview
24	LANL Groundwater Monitoring Program
25	Proposed RCRA Permit Review Schedule
26	Quality Assurance
27	Issues/Closure

MIXED WASTE DISPOSAL FACILITY

Project Scope

- To meet the requirements of the Comprehensive Environmental Response, Compensation, and Liability Act (Superfund), the Environmental Restoration (ER) project has documented numerous historical mixed waste disposal sites at LANL which may pose an unacceptable threat to the environment and must therefore be remediated.
- All mixed wastes removed during remediation must be managed in accordance with the Hazardous and Solid Waste Amendments (HSWA) of LANL's RCRA operating permit. These amendments require waste to be disposed of in accordance with the "land disposal restrictions" of HSWA.
- DOE Order 5820.2A (Radioactive Waste Management) sets forth the treatment and disposal requirements for the radioactive component of the mixed waste.
- The MWDF will provide up to 475,000 cubic yards of regulatory compliant disposal area for mixed hazardous and low level radioactive waste generated by ER and D&D cleanup actions (primarily soils and debris).
- To meet applicable EPA and DOE mixed waste treatment and disposal requirements, the facility will include low temperature thermal treatment for organic removal and capture, and a stabilization treatment process will be provided to immobilize all metals.
- To meet applicable EPA and DOE wastewater treatment and discharge requirements, a wastewater treatment plant will be provided to support leachate and contaminated stormwater treatment prior to on-site evaporation of process use.

MIXED WASTE DISPOSAL FACILITY

Waste Characterization

Statistical Analysis of Hazardous Constituents

Analyte	CAS No.	Waste Code Hierarchy	Group C		
			No. of Occurences	Concentration (mg/kg) Average	Concentration (mg/kg) Maximum
Ag	7440-22-4	D011	192	3.67	208
As	7440-38-2	D004	194	2.99	36
Ba	7440-39-2	D005	194	107	1,733
Benzene	71-43-2	F005,D018	101	0.07	3
Carbon tetrachloride	56-23-5	F001,F002,D019	101	0.02	0.25
Cd	7440-43-9	D006,F006	194	1.94	74.8
Chlordane	57-74-9	D020	8	0.01	0.01
Chlorobenzene	108-90-7	F002,D021	101	0.07	2.5
Chloroform	67-66-3	D022	101	0.07	5.1
Cr	7440-70-2	D007,F006	194	22.7	463
Cyanide	57-12-5	D003,F006,F012	68	0.11	0.41
2,4-D	94-75-7	D016	4	0.19	0.26
1,2-Dichlorobenzene	95-50-1	F002,F001	192	0.84	12
1,4-Dichlorobenzene	106-46-7	D027	192	0.88	12
1,2-Dichloroethane	107-06-2	D028	101	0.02	0.25
1,1,-Dichloroethylene	75-35-4	D029	101	0.07	2.90
1,3-Dinitrobenzene	99-65-0	D003	9	0.27	0.33
2,4-Dinitrotoluene	121-14-2	D003	192	0.84	12
2,6-Dinitrotoluene	606-20-2	D003	192	0.84	12
Endrin	72-20-8	D012	46	0.01	0.07
Heptachlor	76-44-8	D031	46	0.00	0.02
Hexachlorobenzene	118-74-1	D032	192	0.84	12
Hexachlorobutadiene	87-68-3	D033	192	0.84	12
Hexachloroethane	67-72-1	D034	191	0.84	12
Hg	7439-97-6	D009	152	330	50,110
HMX	2691-41-0	D003	9	2.28	2.93
Lindane	58-89-9	D013	46	0.00	0.01
Methyl ethyl ketone	78-93-3	F005,D035	101	0.06	1.60
Methylene chloride	75-09-2	F002,F001	101	0.02	0.51

Analyte	CAS No.	Waste Code Hierarchy	Group C		
			No. of Occurences	Concentration (mg/kg) Average	Concentration (mg/kg) Maximum
Ni	7440-02-0	F006	194	9.60	240
Nitrobenzene	98-95-3	F004,D036	192	0.84	12
o-Cresol	95-48-7	F004,D023	192	0.84	12
p-Cresol	106-44-5	F004,D025	192	3.91	600
Pb	7439-92-1	D008,K046	194	744.42	24,000
Pentachlorophenol	87-86-5	D037	192	1.87	49
RDX	121-82-4	D003	9	1.05	1.33
Se	7782-49-2	D008	194	0.70	10
Tetrachloroethylene	127-18-4	F002,F001,D039	101	0.02	0.51
Tetryl	479-45-8	D003	9	0.68	0.87
Toluene	108-88-3	F005	101	0.39	32.8
Toxaphene	8001-35-2	D015	45	0.17	0.23
2,4,5-TP	93-72-1	D017	4	0.04	0.08
1,1,1-Trichloroethane	71-55-6	F002,F001	101	0.79	78.6
1,1,2-Trichloroethane	79-00-5	F002,F001	101	0.02	0.25
Trichloroethylene	79-01-6	F002,F001,D040	101	0.96	91.2
Trichlorofluoromethane	75-69-4	F002,F001	96	0.02	0.25
2,4,5-Trichlorophenol	95-95-4	D041	192	1.57	49
2,4,6-Trichlorophenol	88-06-2	D042	192	0.84	12
1,1,2-Trichloro-1,2,2-trifluoroethane	76-13-1	F002,F001	95	0.86	80.4
1,3,5-Trinitrobenzene	99-35-4	D003	9	0.27	0.33
2,4,6-Trinitrotoluene	118-96-7	D003	9	0.27	0.33
Vinyl chloride	75-01-4	D043	101	0.02	0.50

MIXED WASTE DISPOSAL FACILITY

Waste Characterization

Statistical Analysis of Radiological Constituents

(a & b)
Composite on 2 columns

Analyte	Group A			Group B			Group C		
	No. of Occurences	Concentration (pCi/g) Average	Concentration (pCi/g) Maximum	No. of Occurences	Concentration (pCi/g) Average	Concentration (pCi/g) Maximum	No. of Occurences	Concentration (pCi/g) Average	Concentration (pCi/g) Maximum
Ac-227	2	1.21	1.65	2	3.19	3.45	4	2.2	3.45
Am-241	30	2.8	54.3	124	1.28	16.6	154	1.58	54.3
Ce-144	0	-	-	1	0.51	0.51	1	0.51	0.51
Co-60	4	0.36	0.52	8	0.21	0.44	12	0.26	0.52
Cs-137	26	0.78	2.22	63	0.38	1.28	89	0.5	2.22
H-3	4	0.09	0.12	14	82.6	384	18	64.2	384
K-40	7	26.4	32.6	14	25.4	35.4	21	25.7	35.4
Pb-210	1	5.98	5.98	2	3.44	4.06	3	4.29	5.98
Pb-212	2	1.32	1.32	4	1.49	1.77	6	1.43	1.77
Pu-238	43	1.1	18.7	162	0.32	10.7	205	0.48	18.7
Pu-239	44	372	16,310	162	12.5	592	206	89.4	16,310
Ra-226	6	1.56	2.1	12	1.47	2.01	18	1.5	2.1
Sr-90	26	3.34	78.4	115	0.33	1	141	0.89	78.4
Tc-99	0	-	-	4	0.3	0.57	4	0.3	0.57
Th-228	7	1.73	3.61	14	1.27	2.03	21	1.42	3.61
Th-230	7	1.31	214	14	1.06	1.74	21	1.14	214
Th-232	11	1.99	3.33	21	1.74	2.91	32	1.83	3.33
Th-234	0	-	-	1	1.91	1.91	1	1.91	1.91
Tl-208	3	0.43	0.49	1	0.39	0.39	4	0.42	0.49
U-234	19	8.47	106	102	6.15	151	121	6.51	151
U-235	22	1.11	11.7	104	0.42	7.03	126	0.54	11.7
U-238	20	8.64	52.1	99	5	150	119	5.61	150

MIXED WASTE DISPOSAL FACILITY

Waste Treatment Plan

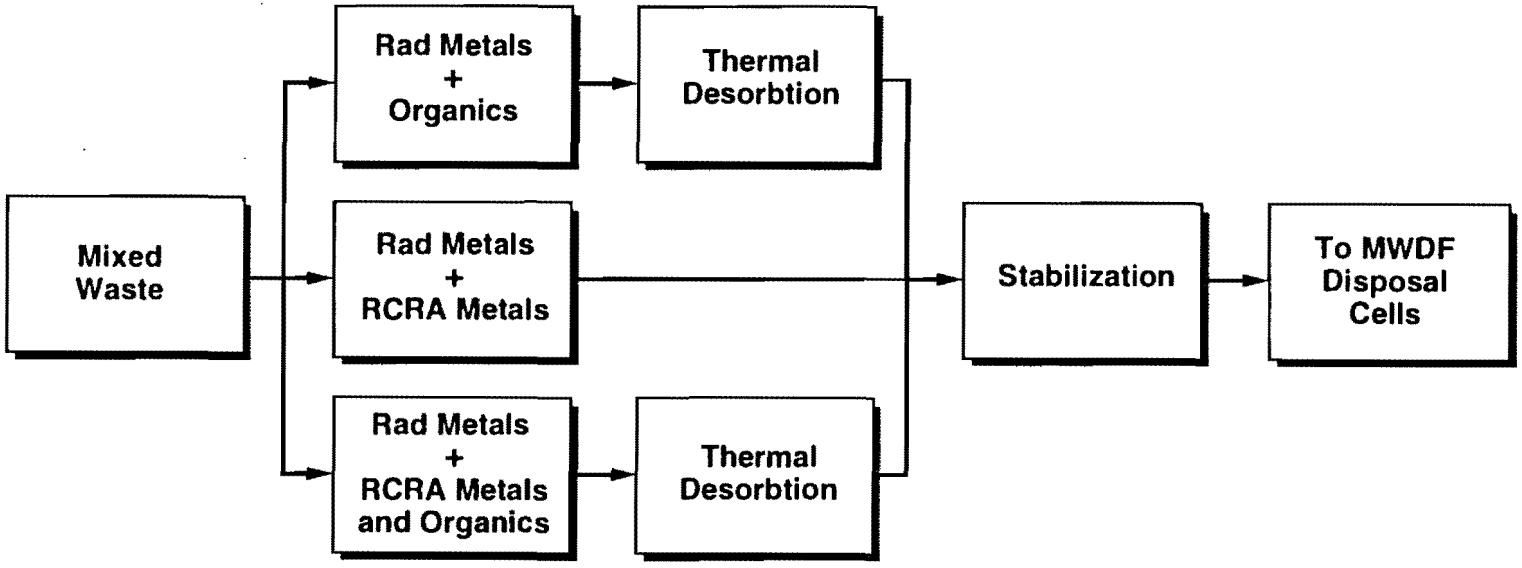

MIXED WASTE DISPOSAL FACILITY

Regulatory Drivers

RCRA/HSWA

- ❒ Hazardous waste management
- ❒ GW monitoring

NPDES

- ❒ Stormwater management during construction
- ❒ Stormwater management during operations
- ❒ Industrial point source or zero discharge permit

NESHAPS

- ❒ Exhaust gas from thermal desorption process

NMAAQS

- ❒ Exhaust from NG combustion

Any specific mapping to look for surge beds in Tshirege.
Charlie - No.
Sup there is a moisture barrier associated w/ surge deposits

MIXED WASTE DISPOSAL FACILITY

Site Geology/Hydrology

trenching - didn't see Holocene movement of faults

has spring in 3 mile canyon been sampled (between unit 74 & 3 in Tshirege)
Charlie - No
Price - this would be a project for this summer's field work

- **Goal**

  To ensure long term integrity of the MWDF through evaluation of geological and geotechnial properties of the soils and tuff bedrock at Pajarito Mesa.

- **Strategy (Geological Evaluation)**
  - **Complete stratigraphic, mineralogic, and chemical analyses of tuffs.**
  - **Determine degree of potential mesa edge instability.**
  - **Evaluate mesa-penetrating fractures, fracture mineralogy, and projected fault traces.**

- **Strategy (Geotechnical Evaluation)**
  - **Evaluate support structure foundation behavior for building sites.**
  - **Evaluate pit foundation behavior and pit sidewall stability.**
  - **Determine hydrogeological characteristics of unsaturated tuff.**

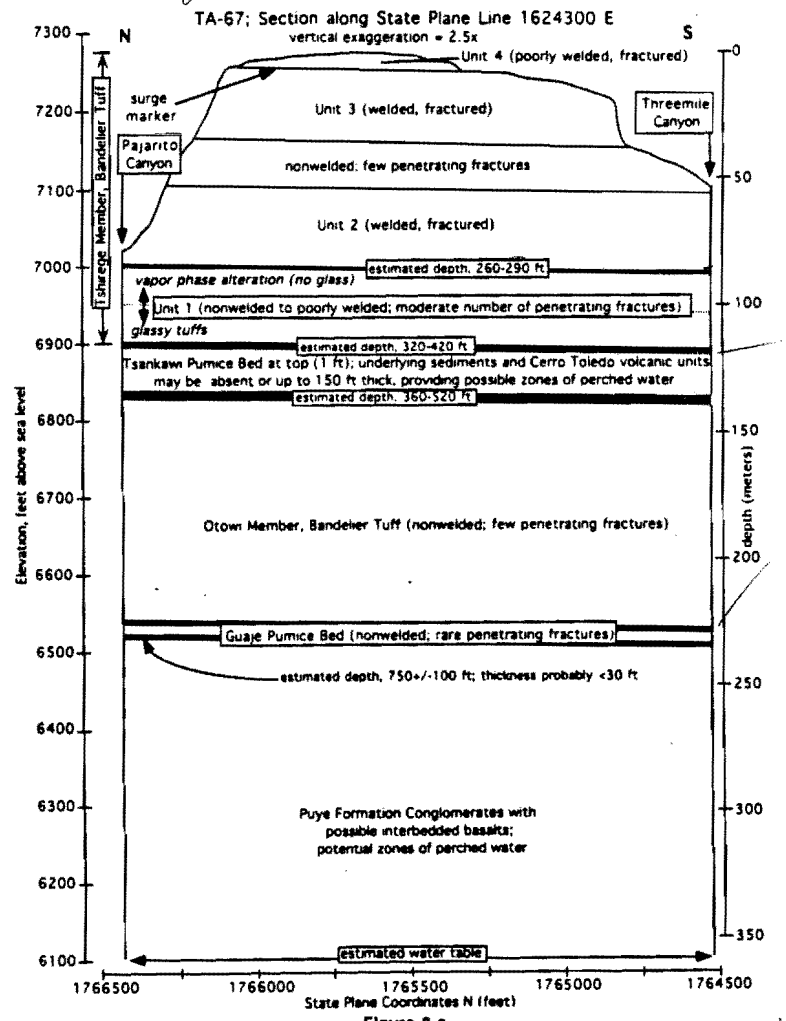

Figure 3-2
Stratigraphy Beneath the Proposed MWDF

MIXED WASTE DISPOSAL FACILITY

Site Geology/Hydrology - Results

Geological (Stratigraphy, Mineralogy, and Chemistry)

- Pajarito Mesa is composed of Tshirege member of Bandelier tuff and post-Bandelier alluvial deposits.
- The MWDF would lie within overlying alluvial deposits and Tshirege Unit 4 on the west, transitioning to Tshirege Unit 3 on the east.
- Mineralogy and chemistry well characterized.

Geotechnical

- Six bore holes located around pit have been drilled, cored, and logged to a depth of 40 meters.
  - The rock core is being tested by triaxial, tensile, and joint shear methods to determine stability of pit side walls.
  - The rock core is also being tested for deformation characteristics and joint stiffness. Test results arecombined with data from one above to determine the bearing capacity, deformability, and settlement potential of the pit bottom and side walls.
- Seventeen field test pits (exposing faces of up to six-meters-wide by three-meters-deep) have been excavated to evaluate foundation properties at locations beneath major structures.
- Hydrogeologic testing
  - Cores from six bore holes above are being analyzed for the following: volumetric moisture content, residual moisture, moisture characteristic/retention curves, dry bulk density, grain or particle density, saturated hydraulic conductivity, porosity, specific surface area, and calculated unsaturated hydraulic conductivity.
  - Three of the excavated pits from above were used for simple in-situ infiltration studies for estimating vertical infiltration rates.

MIXED WASTE DISPOSAL FACILITY

Site Geology/Hydrology - Planned/Underway

- Three deep holes are planned to be drilled, continuously cored, and logged to a depth of 120 meters at Pajarito Mesa. These cores will answer questions concerning:
  - The potential for perched water existing at Pajarito Mesa above the level of Pajarito Canyon.
  - The geohydrological properties at depth of tuffs comprising underlying units of the Tshirege member at Pajarito Mesa.
  - Vertical profiling of in-situ moisture content and metric potential (resolved to 1.5-meter intervals).
  - In-situ air permeability properties of the tuffs of Pajarito Mesa.
  - Stratigraphic correlations of Tshirege member units across Pajarito Mesa as extrapolated from studies of cliff exposures.
- Twenty-six shallow bore holes (6 to 12 meters deep) are planned to be drilled, continuously cored, and logged to complete investigations on foundation conditions at major facility sites.

MIXED WASTE DISPOSAL FACILITY

Design Basis and Assumptions

- ❒ Permitted storage capacity equaling approximately 4,400 cubic yards.
- ❒ Permitted disposal capacity equaling approximately 475,000 cubic yards.
- ❒ 60,000 cubic yard annual throughput (treatment and disposal capacity).
- ❒ Groundwater monitoring waiver supported by Vadose Zone Monitoring System and "dry barrier" remediation layer as demonstrated at Sandia National Laboratories.
- ❒ 10 to 20-year operational life; 50-year disposal cell design life.
- ❒ Full on-site analytical capability (radiological and hazardous).
- ❒ Soils contaminated with organics to be treated by Thermal Desorption.
- ❒ Liquid organics from TD to be sent off-site for disposal.
- ❒ Tritiated water in soils to be removed by TD with organics or sent to stabilization.
- ❒ Soils contaminated with radioactive and/or hazardous metals to be treated by stabilization.
- ❒ Complete on-site wastewater treatment and disposal capability.
- ❒ Complete storm water management capability.

MIXED WASTE DISPOSAL FACILITY

Facility Plans and Details

11 Overview and Location Plan

12 Site and Drainage Plan

13 Site Water Balance

14 Waste Treatment Building - Process Equipment Floor Plan

15 Thermal Desorption Process Flow Diagram

16 Stabilization Process Flow Diagram

17 Wastewater Treatment Process Flow Diagram

18 Disposal Pit Plan View

19 Disposal Pit MAS Piping Plan

20 Disposal Pit MAS Vent Piping Plan

21 Disposal Cell Civil Cross Sections

22 Disposal Pit Grading and Cover Details

MIXED WASTE DISPOSAL FACILITY
Overview and Location Plan

Description

The MWDF project includes the design and construction of approximately 12 acres of RCRA permitted disposal area at TA-67 to accommodate up to 475,000 cubic yards of mixed waste. Major elements of the disposal area and supporting infrastructure include:

Supporting Infrastructure

- ❒ Site Access and Utility Improvements
- ❒ Support and control/Monitoring Facilities
- ❒ Site Drainage and Storm Water Runoff Control

RCRA Permitted Systems

- ❒ Staging and Treatment Facilities
- ❒ Disposal Cells
- ❒ Leachate Collection/Removal

NPDES Permitted Systems

- ❒ Storm Water Retention Tank and Outfall

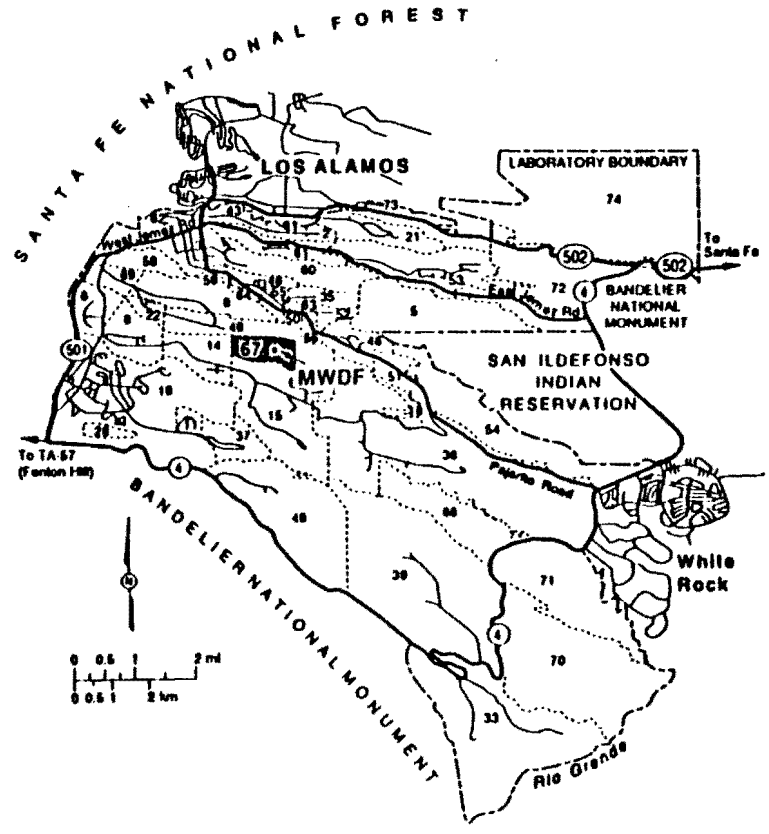

Location of Mixed-Waste Disposal Facility

MIXED WASTE DISPOSAL FACILITY
Site and Drainage Plan

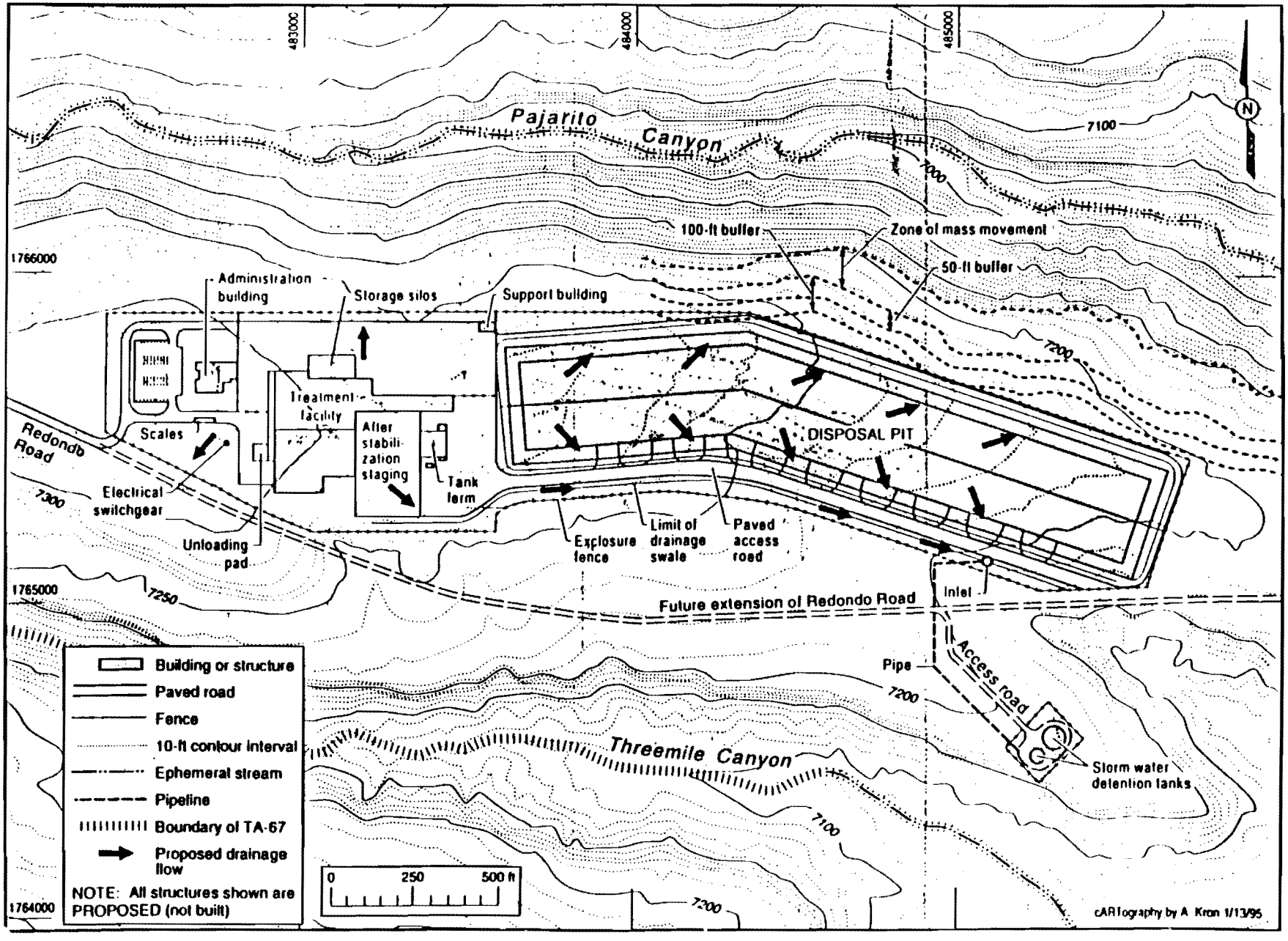

MIXED WASTE DISPOSAL FACILITY
Site Water Balance

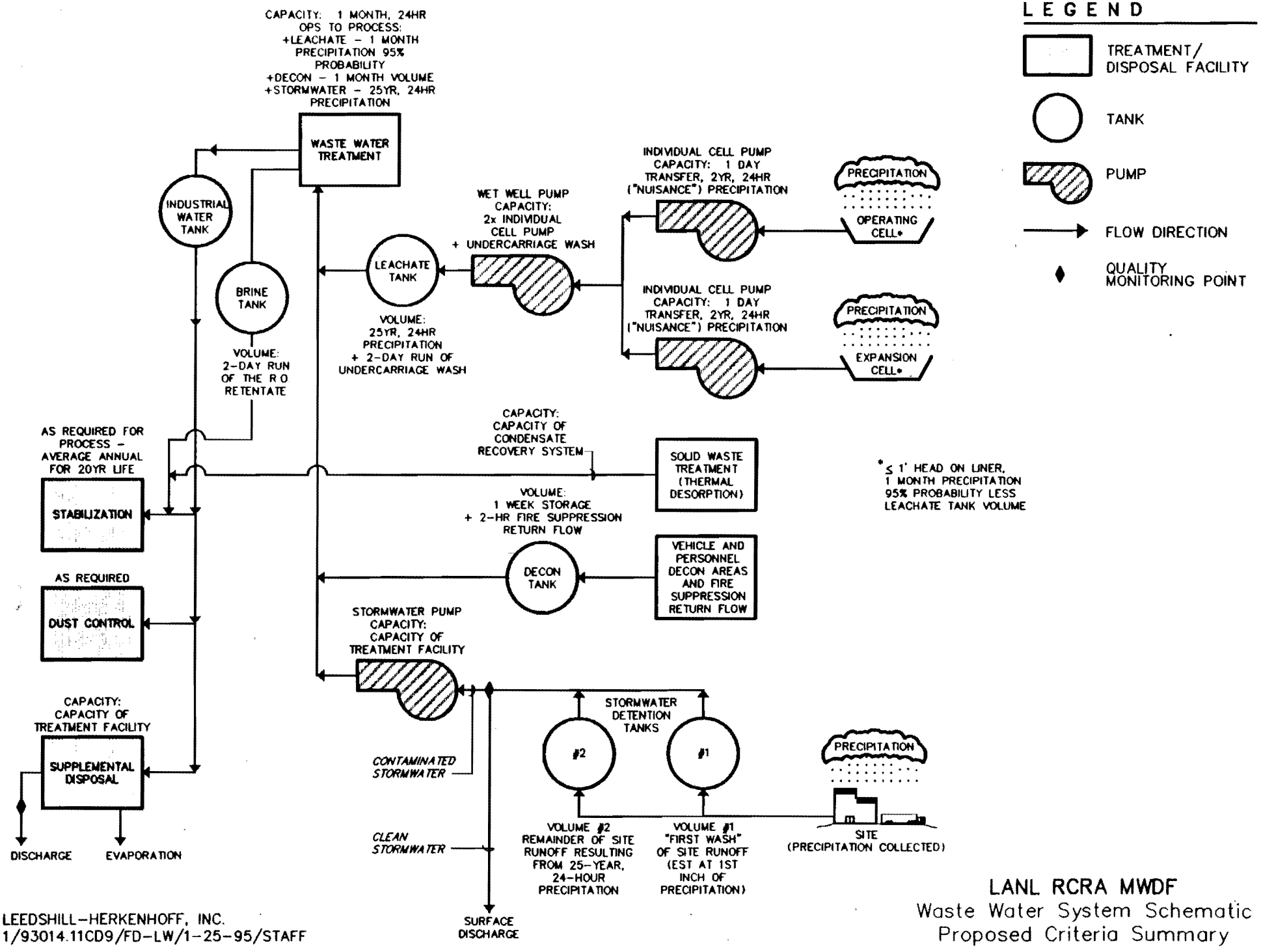

LEEDSHILL-HERKENHOFF, INC.
1/93014.11CD9/FD-LW/1-25-95/STAFF

LANL RCRA MWDF
Waste Water System Schematic
Proposed Criteria Summary

Does LANL have water rights to handle this facility? need: 320k gal/month
- will have problems initially, but later on after rainstorms, not an issue.

MIXED WASTE DISPOSAL FACILITY

Waste Treatment Building - Process Equipment Floor Plan

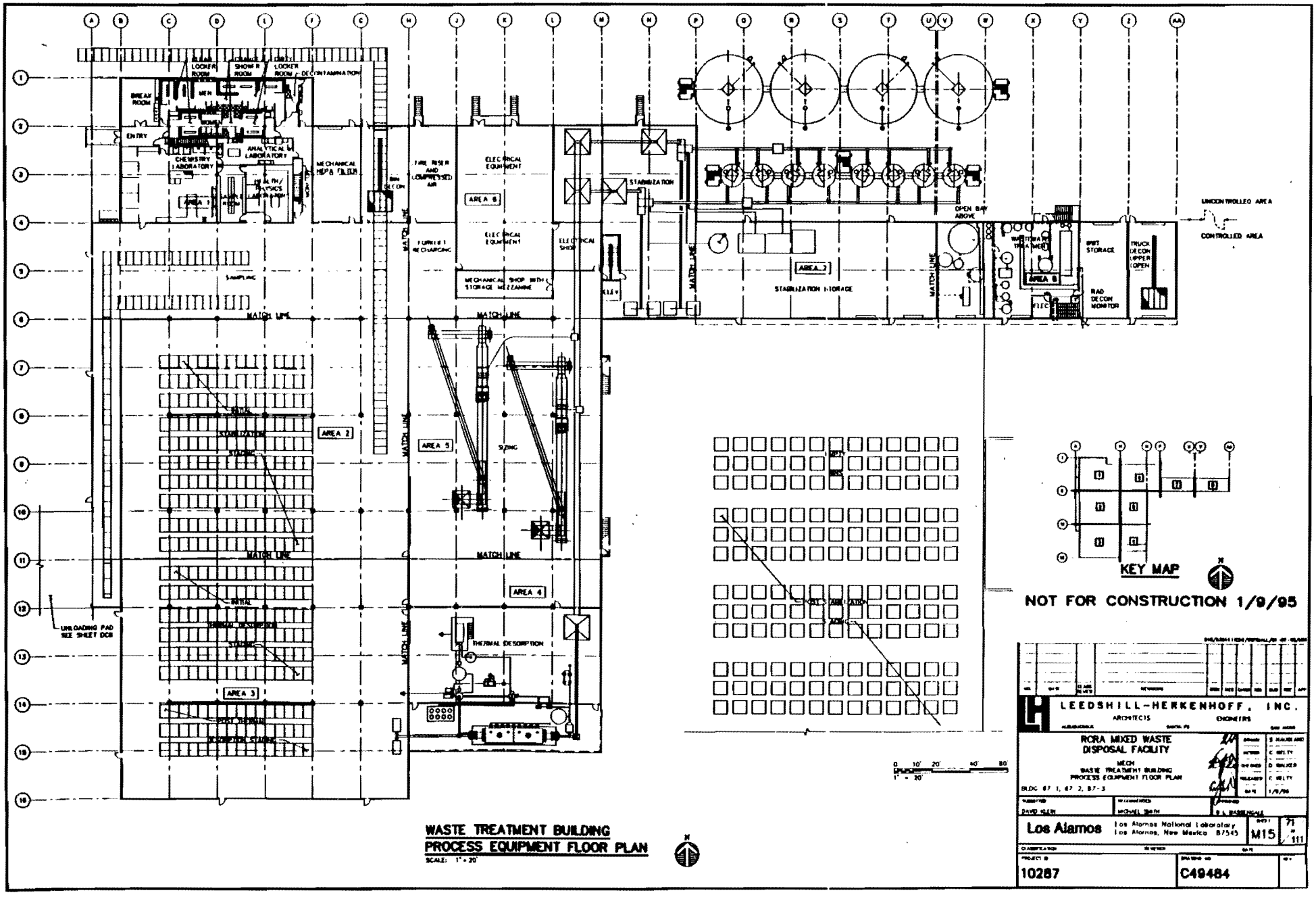

MIXED WASTE DISPOSAL FACILITY
Thermal Desorption Process Flow Diagram

Low temp 450- °F

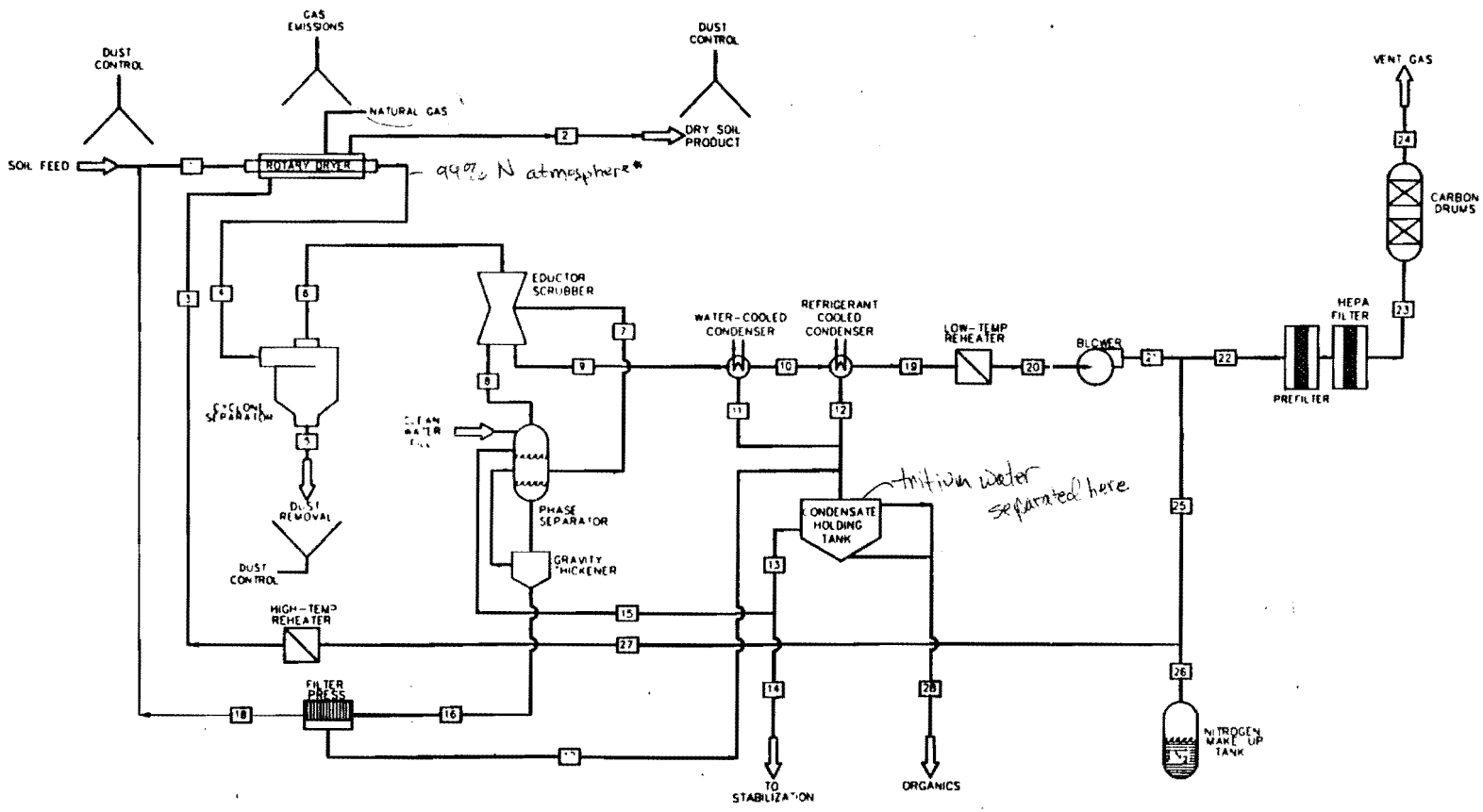

NOT FOR CONSTRUCTION 1/3/95

THIS DRAWING WAS PREPARED BY LOS ALAMOS NATIONAL LABORATORY AND IS INCLUDED IN THIS SET FOR REFERENCE PURPOSES

STREAM-LB/HR	1	2	3	4	5	6	7	8	9	10	11	12	13	14	15	16	17	18	19	20	21	22	23	24	25	26	27	28
SOIL/DUST	6024	5723	0.2	301	271	30		29	[illegible]	0.6	0.4	0.4	[illegible]	0.5	0.6	30	0.3	30	0.2	0.2	0.2	<0.1			0.2		0.2	
WATER/STREAM	670		7	677		677	60000	59759	918	42	876	35	1367	626	741	500	456	44	7	7	7	0.4			7		7	<[illegible]
ORGANICS	6		80	86		86	0.7		87	86	0.3	2.5	1.2	0.5	0.7				84	84	84	4	4	<0.1	80		80	[illegible]
NITROGEN			917	917		917			917	917									917	917	917	46	46	46	871	46	917	

ORIGINAL ISSUE
REVISIONS

Los Alamos
Los Alamos National Laboratory
Los Alamos, New Mexico 87545

AUTOCAD FILE NAME
3102D01

PROCESS FLOW DIAGRAM
MIXED WASTE DISPOSAL FACILITY THERMAL DESORPTION

2 26Y-203102

MIXED WASTE DISPOSAL FACILITY
Stabilization Process Flow Diagram

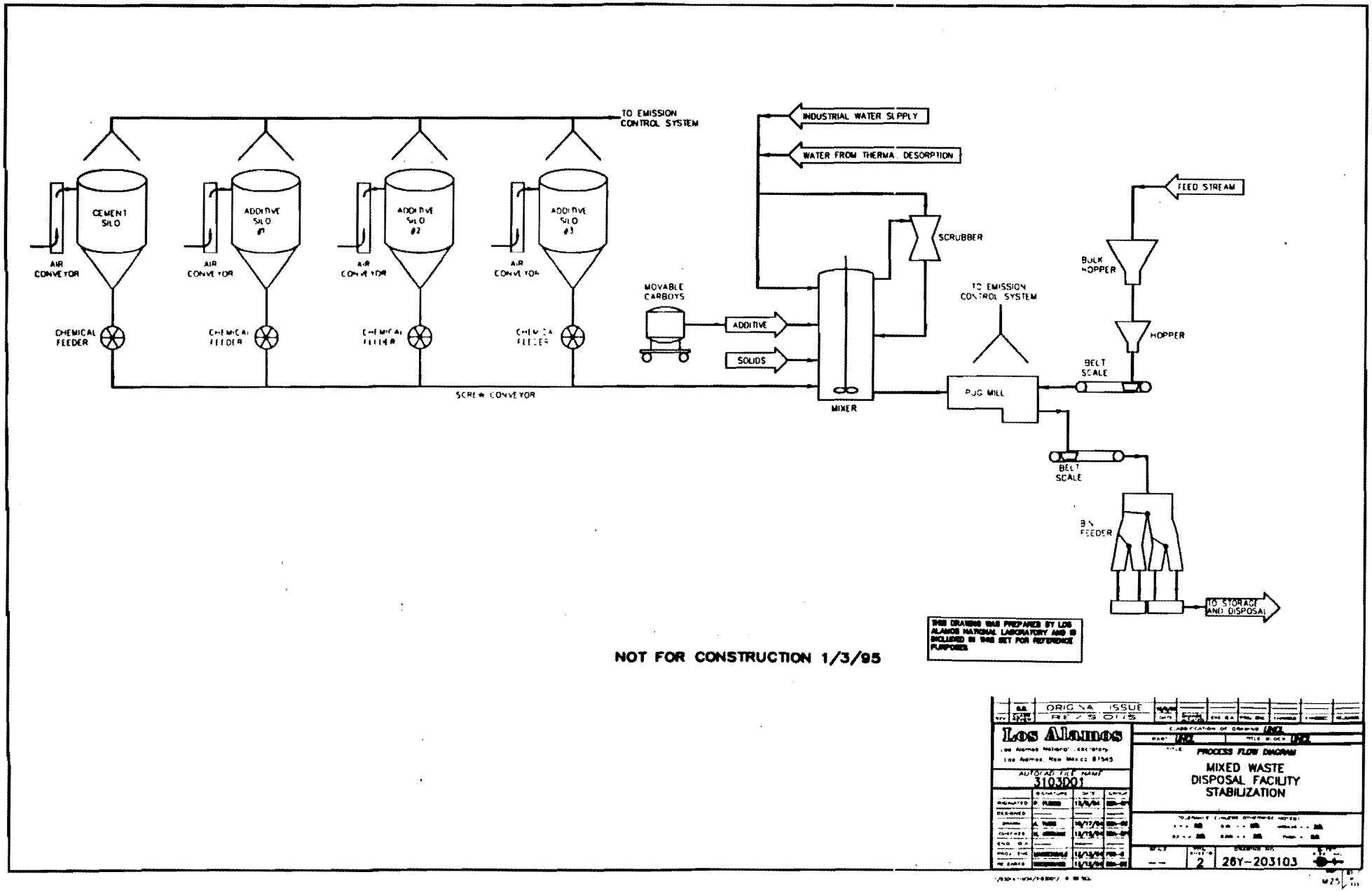

MIXED WASTE DISPOSAL FACILITY
Wastewater Treatment Process Flow Diagram

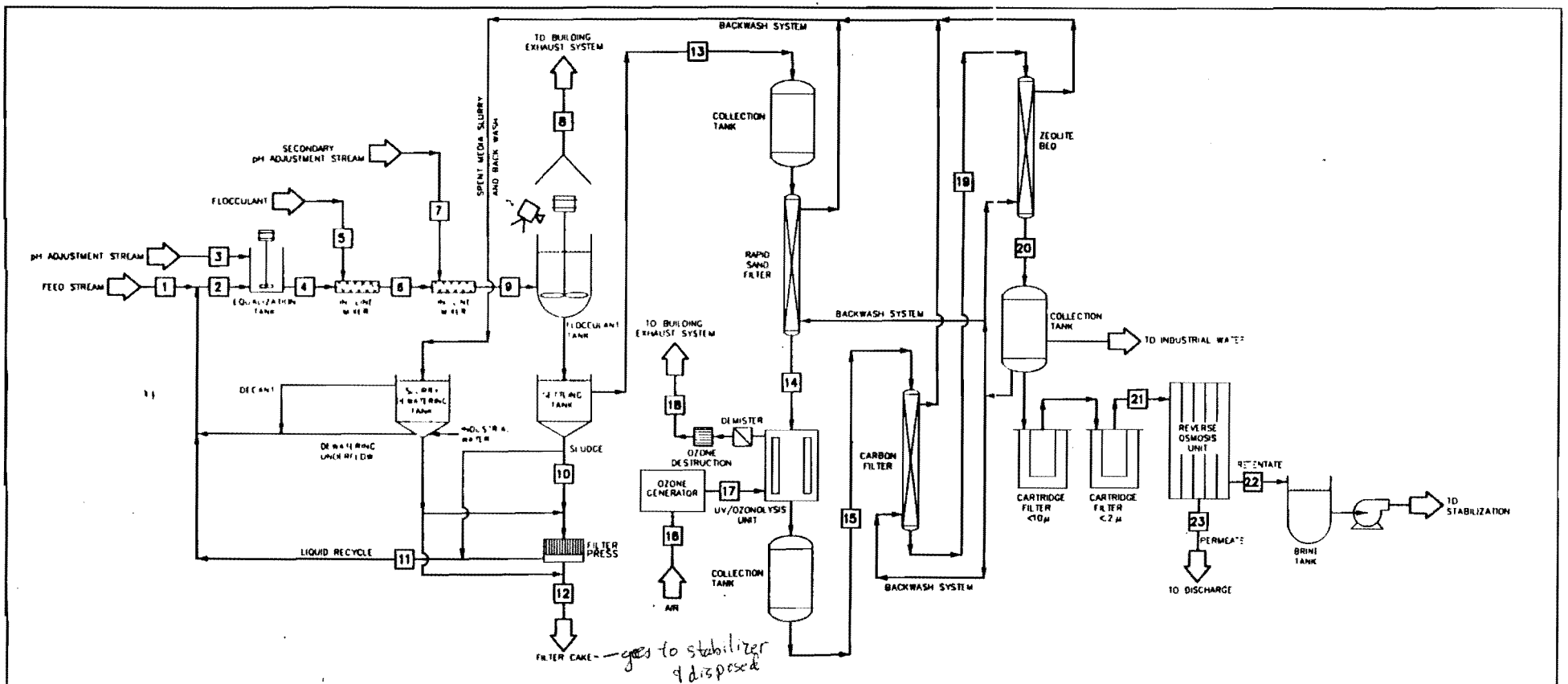

STREAM #	1	2	3	4	5	6	7	8	9	10	11	12	13	14	15	16	17	18	19	20	21	22	23
WATER (gal/min)	40	40.3		40.3	0.5	40.8			40.8	0.400	0.3	0.02	40.392	40.392	40.392				40.392	40.392	40.392	10.098	30.294
ANIONS (meq/L)	5	5		5	72	5.9			5.9	5.9	5.9	5.9	5.9	5.9	5.9				5.9	5.9	5.9	21.24	0.59
CATIONS (meq/L)	5	5		5	72	5.9			5.9	5.9	5.9	5.9	5.9	5.9	5.9				5.9	5.9	5.9	21.24	0.59
RADIOACTIVE (pCi/L)	50	50		50		50			50	4500	5	17980	5	0.5	0.5				0.5	0.05	0.05	0.18	0.007
ORGANIC CARBON (mg/L)	100	100		100		100			100	100	100	100	100	100	10				1	1	1	3.6	0.13
SOLIDS (mg/L)	100	100		100	4000	148			148	13310	100	52900	14.9	1.5	1.5				1.5	1.5	0.15	0.54	0.2

ORIGINAL ISSUE

Los Alamos
Los Alamos National Laboratory
Los Alamos, New Mexico 87545

AUTOCAD FILE NAME 3104D01

PROCESS FLOW DIAGRAM

MIXED WASTE DISPOSAL FACILITY WASTE WATER TREATMENT

SHEET 2 | 26Y-203104

NOT FOR CONSTRUCTION 1/3/95

THIS DRAWING WAS PREPARED BY LOS ALAMOS NATIONAL LABORATORY AND IS INCLUDED IN THIS SET FOR REFERENCE PURPOSES

MIXED WASTE DISPOSAL FACILITY
Disposal Pit Plan View

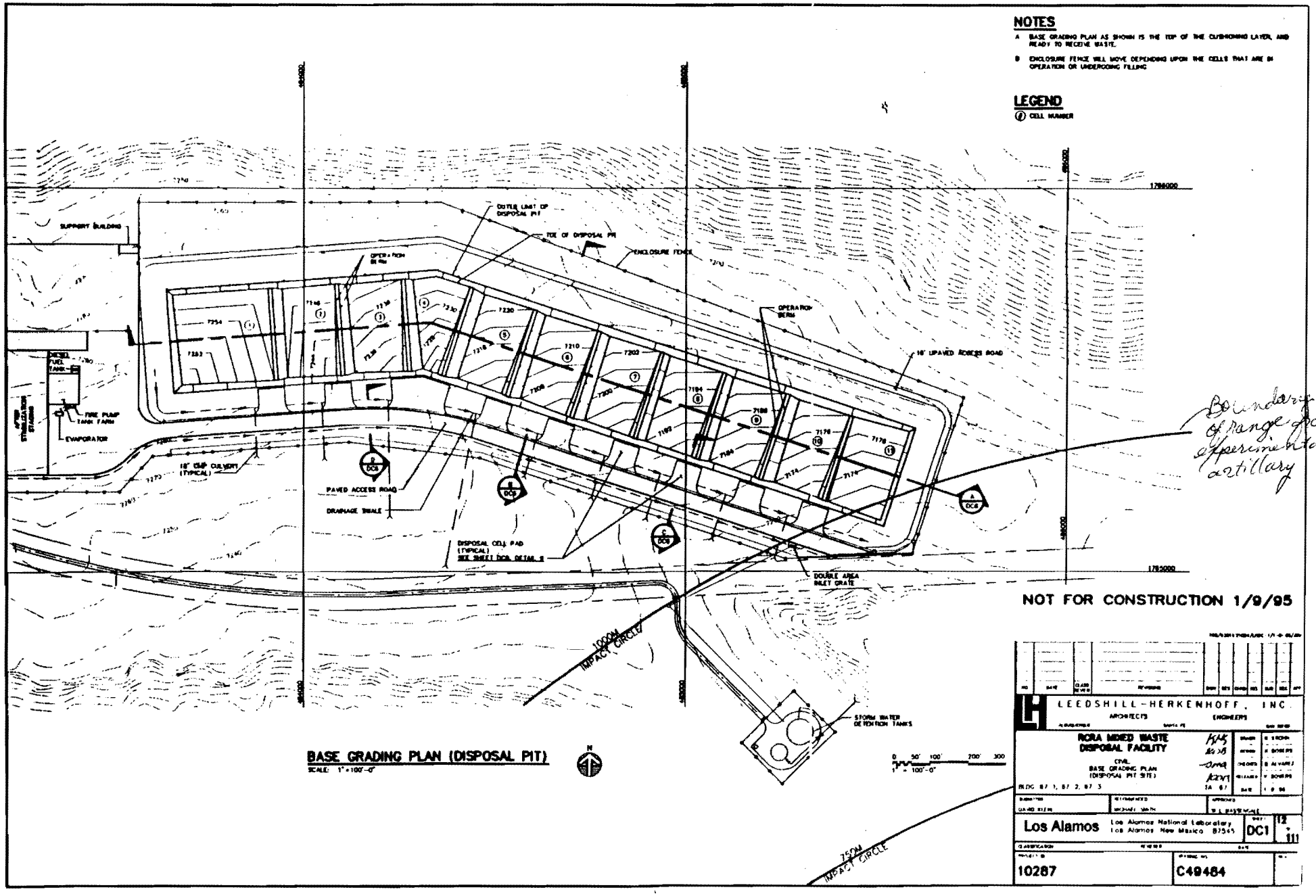

MIXED WASTE DISPOSAL FACILITY
Disposal Pit MAS Piping Plan

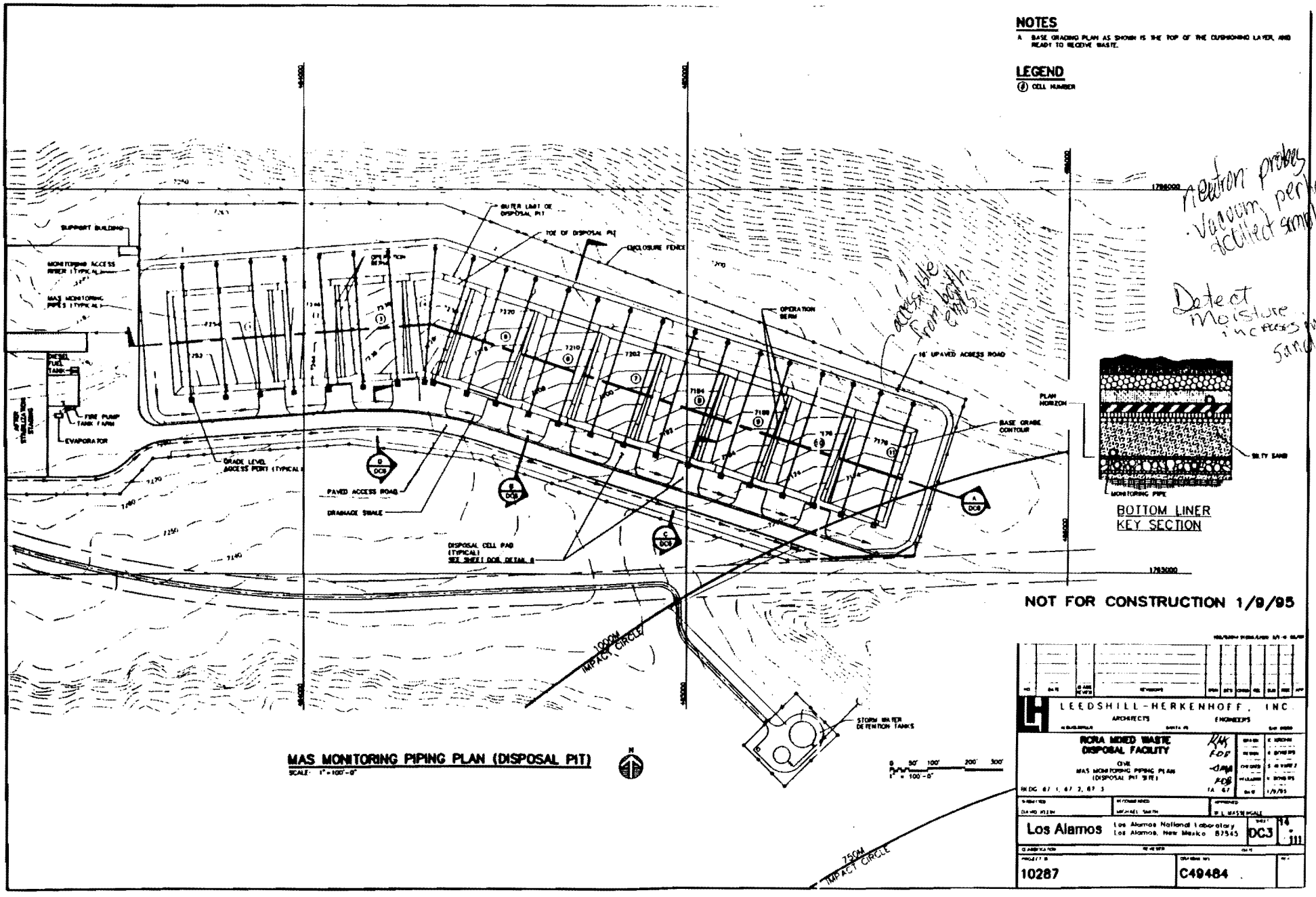

MIXED WASTE DISPOSAL FACILITY
Disposal Pit MAS Vent Piping Plan

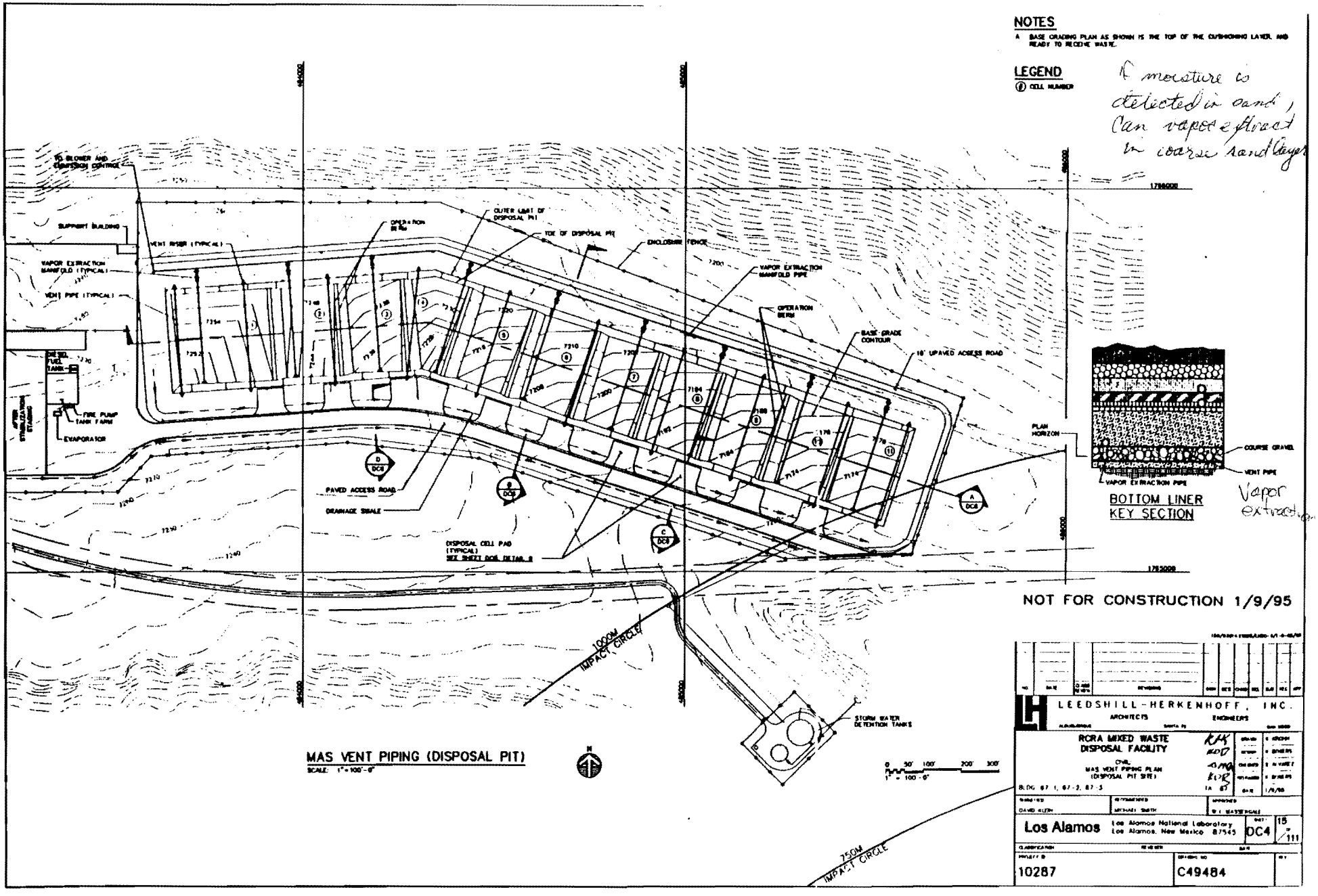

MIXED WASTE DISPOSAL FACILITY
Disposal Cell Civil Cross Sections

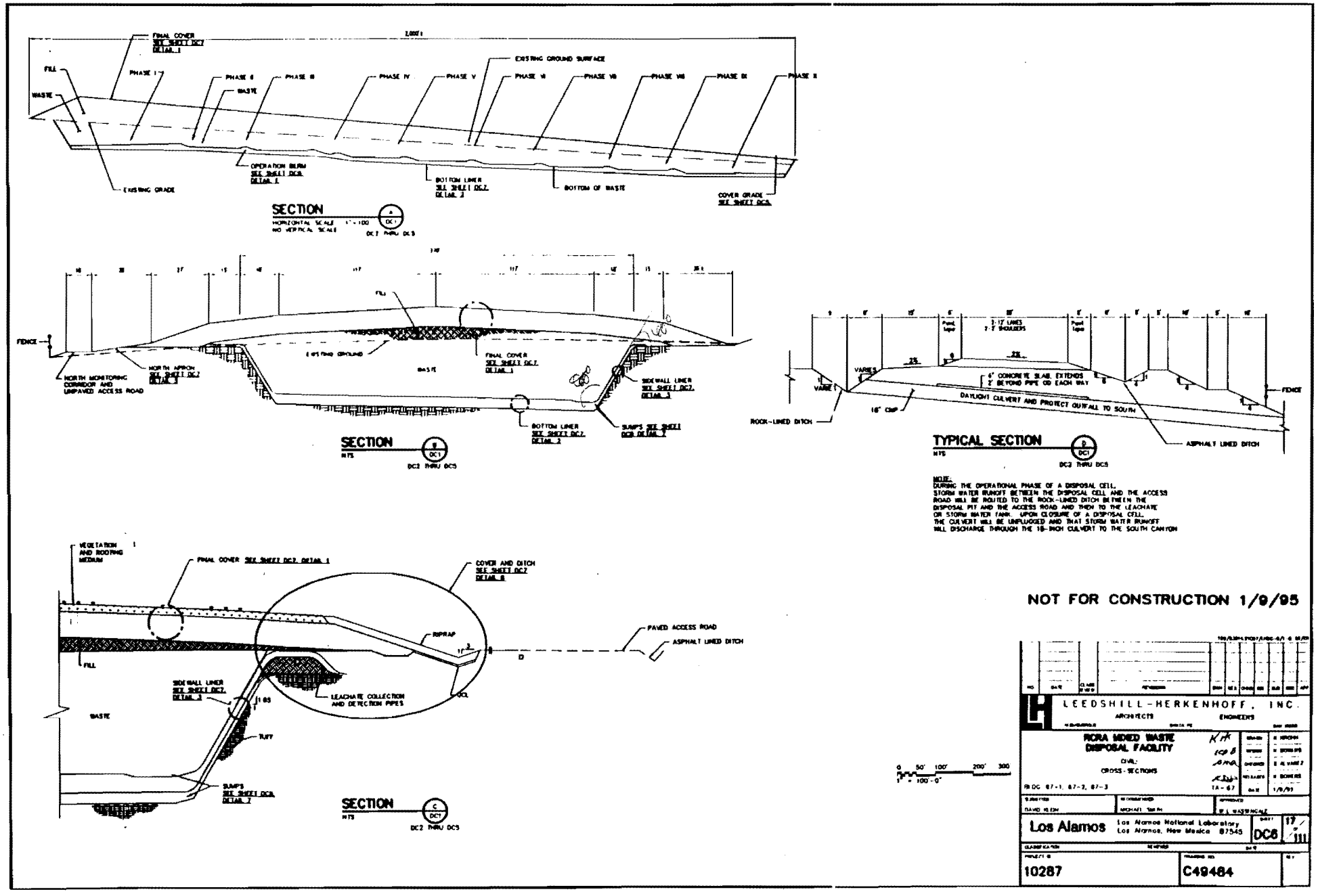

MIXED WASTE DISPOSAL FACILITY

Disposal Pit Grading and Cover Details

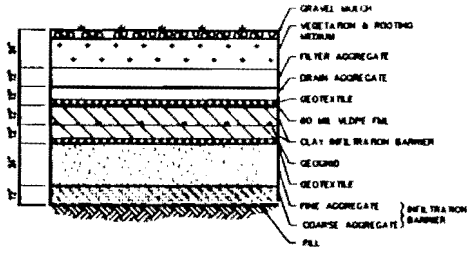

FINAL COVER
NTS
DC5
DC8
DC11 THRU DC16

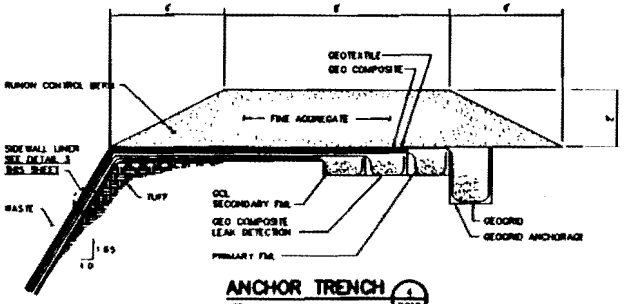

ANCHOR TRENCH
NTS
DC10
DC11 THRU DC16

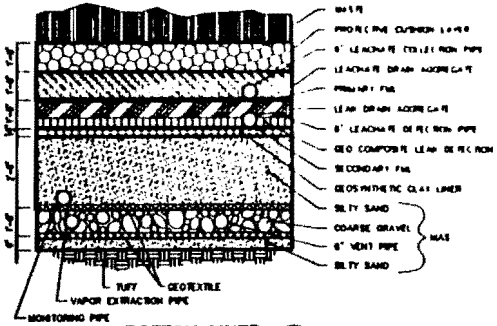

BOTTOM LINER
NTS
DC8
DC8 THRU DC16

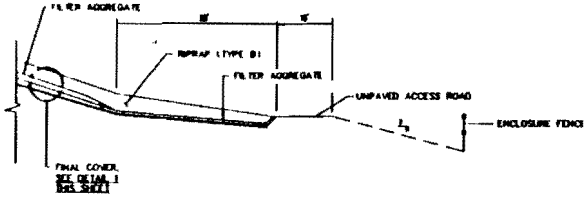

NORTH APRON
NTS
DC4
DC8
DC8

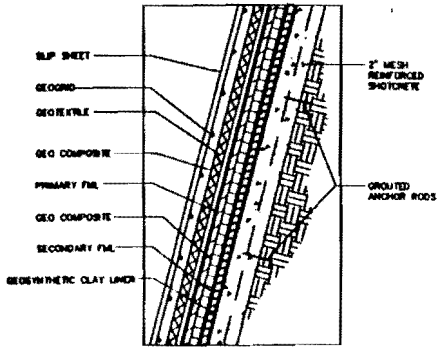

SIDEWALL LINER
NTS
DC8
DC10 THRU DC16

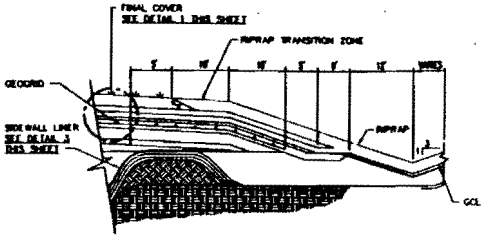

COVER AND DITCH
NTS
DC6

NOT FOR CONSTRUCTION 1/9/95

LEEDSHILL-HERKENHOFF, INC.
ARCHITECTS ENGINEERS

RCRA MIXED WASTE DISPOSAL FACILITY
CIVIL
DETAILS (GRADING & COVER)
BLDG 67-1, 67-2, 67-3

Los Alamos National Laboratory
Los Alamos, New Mexico 87545

DC7

10287

C49484

MIXED WASTE DISPOSAL FACILITY

RCRA Permitting Overview

Regulatory Drivers

- Module VIII of LANL's Hazardous Waste Facility Permit sets forth timeframes for corrective action at LANL's Solid Waste Management Units (SWMUs) as enforceable permit conditions. The MWDF will allow LANL to comply with these timeframes by providing a storage, treatment, and disposal option for wastes resulting from corrective actions at SWMUs.
- The MWDF is intended for storage, treatment, and disposal of mixed waste (waste that has both a RCRA hazardous component and a radioactive component). There are stringent treatment requirements that are part of the RCRA Land Disposal Restrictions (LDR) that must be met prior to placement of RCRA hazardous waste in a disposal cell. The treatment systems at the MWDF are intended to treat RCRA hazardous waste to meet LDR treatment standards.
- RCRA hazardous wasted that meets LDR and thus may be land disposed, in most cases will still meet the definition of RCRA hazardous waste based on: (1) it was a listed waste; or (2) for characteristic waste, the LDR treatment standard equals the TC level. Characteristic wastes can only be reclassified as nonhazardous if they are treated to below characteristic levels.
- Because the treated waste is still a RCRA hazardous waste, RCRA regulations require that the waste be placed in lined, monitored disposal cells that meet RCRA design, construction, operation, and maintenance requirements. The MWDF disposal cells will be permitted and will meet all applicable RCRA requirements.
- RCRA also requires that facilities such as the MWDF prevent run-on to and runoff from hazardous waste handling areas to other areas of the facility or environment. In the event that run-on or runoff occurs, the resulting liquid should be collected and analyzed prior to discharge. Treatment of the liquid may be required before discharge may occur.

MIXED WASTE DISPOSAL FACILITY

Proposed RCRA Permit Review Schedule

Activity ID	Activity Description	Orig Dur	Early Start	Early Finish
010797	**Permitting**			
010797100	Prep Part A/B Application	111	03OCT94	17MAR95
010797110	Preliminary Draft Production of	7	20MAR95*	28MAR95
010797115	LANL Review of Prelim Draft of	40	29MAR95	23MAY95
010797120	Comment Resolution of Prelim	39	24MAY95	19JUL95
010797125	LANL / DOE Review Final Draft	23	20JUL95	21AUG95
010797130	Comment Resolution for Final	15	22AUG95	12SEP95
010797135	Legal Review of Final Document	22	13SEP95	13OCT95
010797140	Final Production of Part B	16	16OCT95	06NOV95
010797142	Submit Application to NMED &	0		06NOV95
010797175	NMED/EPA Completeness	94	07NOV95	27MAR96
010797177	Receive NMED & EPA	0		27MAR96
010797200	Incorp NMED Comments & Title	40	28MAR96	22MAY96
010797225	NMED Tech Review of Permit	128	23MAY96	25NOV96
010797250	EPA Review of Permit Appl -	128	23MAY96	25NOV96
010797252	Receive NOD's From NMED &	0		25NOV96
010797275	Incorp NMED & EPA NOD's (As	40	26NOV96	28JAN97
010797277	Submit Permit Application REV 2	0		28JAN97
010797300	NMED & EPA Review Permit	127	29JAN97	29JUL97
010797305	Permit Application REV 2	0		29JUL97
010797325	NMED Conducts Public Hearings	44	30JUL97	30SEP97
010797350	NMED Drafts RCRA Permit	81	01OCT97	02FEB98
010797375	RCRA Permit Issuance	20	03FEB98	03MAR98
010797377	RECEIPT OF RCRA PERMIT	0		03MAR98

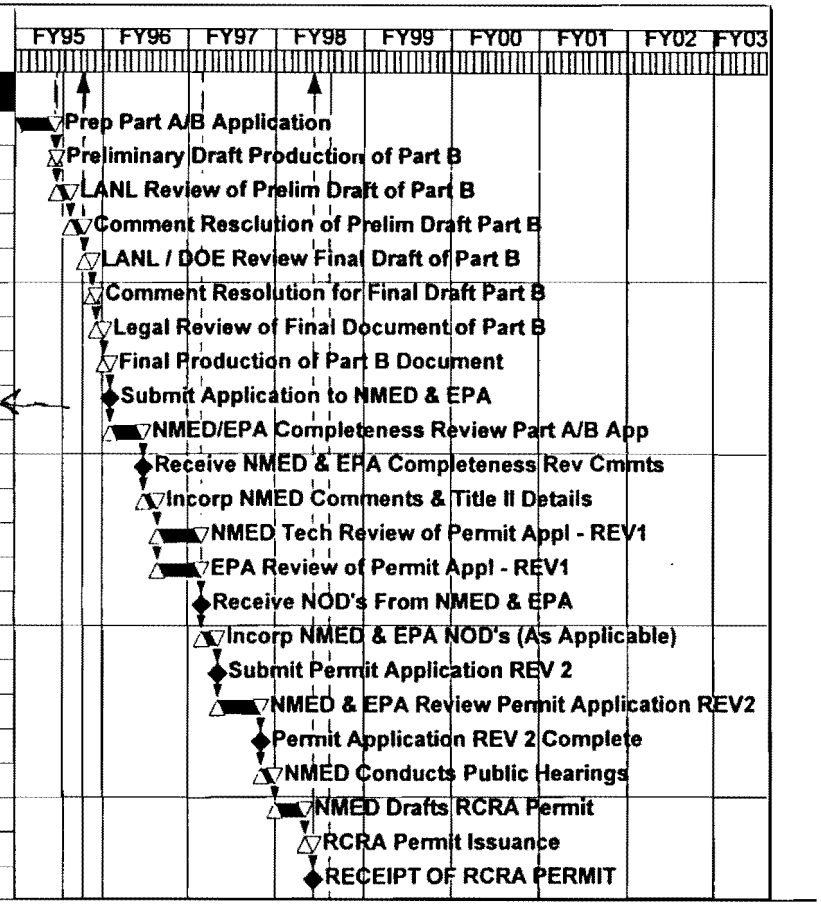

MIXED WASTE DISPOSAL FACILITY

Quality Assurance

EPA Requirements

- EPA QAMS 004/005 - Interim Guidelines and Specifications for Preparing Quality Assurance Project Plans
- EPA/600/R-93/182 - Quality Assurance and Quality Control for Waste Containment Facilities (technical guidance document)

DOE Quality Assurance Requirements

- DOE Order 5700.6C - Quality Assurance
- 10 CFR Part 830.120 - Quality Assurance Requirements for Nuclear Facilities

Current Quality Assurance Structure

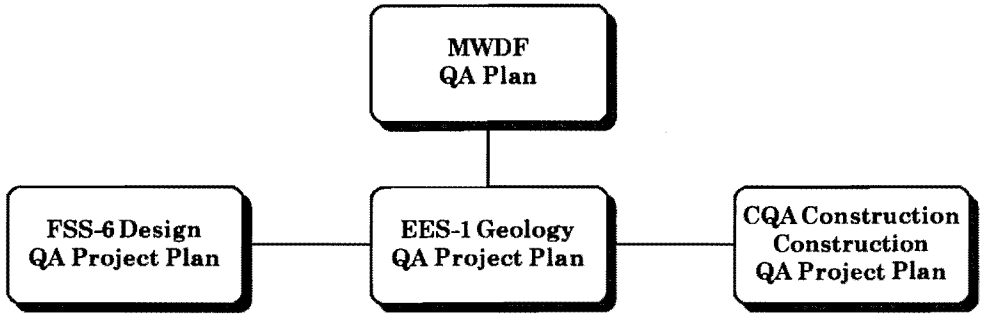

MIXED WASTE DISPOSAL FACILITY

Issues/Closure

Summary of Waivers and Variances

- Groundwater Monitoring Waiver Demonstration
- Steep Sidewall Variance
- GCL Substitution for Clay Liner

Establishment of Permitting Team to Expedite Technical Communications

- Department of Energy
- NMED
- LANL
- USEPA