TCPI

LOS ALAMOS SITE OFFICE
TA-73 AIRPORT LANDFILLS

DESIGN CALCULATIONS FOR WALL No. 1

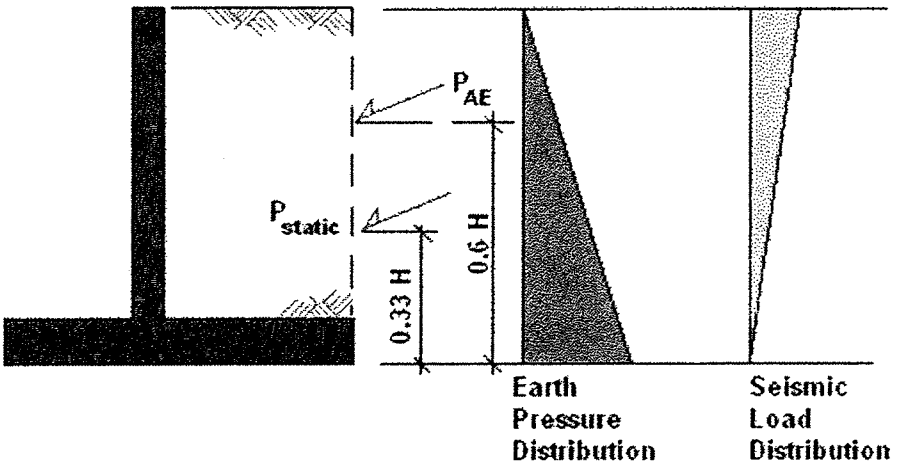

June, 2005

by

TCPI
436 Creamery Way
Suite 100
Exton, Pennsylvania 19341

4933

LOS ALAMOS SITE OFFICE
TA-73 AIRPORT LANDFILLS

DESIGN CALCULATIONS FOR WALL No. 1

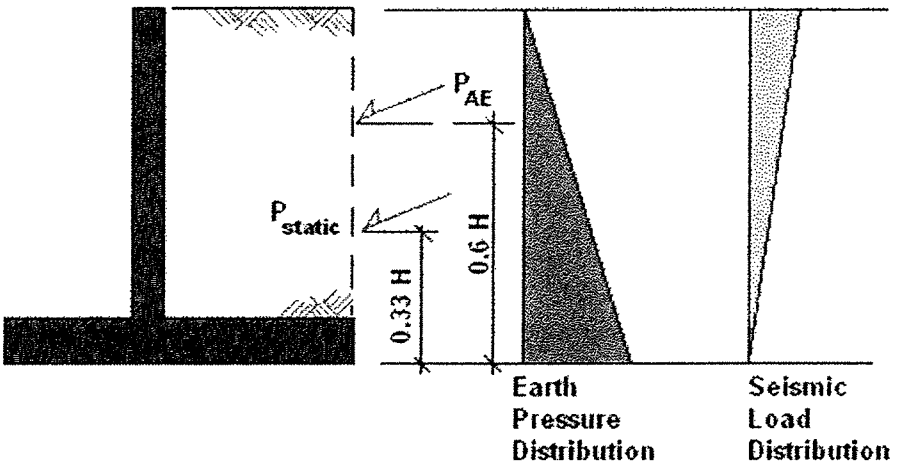

June, 2005

by

TCPI
436 Creamery Way
Suite 100
Exton, Pennsylvania 19341

Design Calculations Retaining Wall 1

Index

1.0 Design Criteria
2.0 Calculations

Appendix A List of References
Appendix B Geotechnical Calculations (By WESTON Solutions, Inc)
Appendix C Geotechnical Calculations of Surcharge effects from MSE Walls. (By WESTON Solutions, Inc)
Appendix D Earthquake (Seismic Design)
Appendix E User's Manual Retain Pro 2005

1.0 Design Criteria

1.1 **General:** The reinforced concrete retaining wall (i.e. Wall No. 1) was design using the following documents. See Appendix 'A' for a list of references.

1.1.1 Retaining Wall No. 1 was design in accordance with International Building Code (IBC) 2003 Edition.

1.1.2 ACI 318-02 "Building Code Requirements for Structural Concrete".

1.2 **Wall Heights:** The retaining wall was design in height increments of 5'-0" from Grade to a maximum height of 24'-0". The following is a list of wall mark numbers and the maximum height for that wall.

Mk. No.	From	To
A	Grade	5'-0"
B	≥ 5'-1"	10-0"
C	≥ 10'-1"	15'-0"
D	≥ 15'-1"	20'-0"
E	≥ 20'-1"	24'-0"

1.3 **Load Cases:** The following four (4) load cased were evaluated for each wall height

1.3.1 Normal Load: This is the basic design load on the wall. It consisted of the following items

1.3.1.1 EFP (equivalent fluid pressure) of 51 pcf. Sheet 9 of Appendix B recommends an EFP of 45.5 pcf based on the average of the active (Ka) and the at-rest (Ko) lateral earth pressure coefficients. The actual lateral earth pressure condition is somewhere between the active and the at-rest cases. The wall is not free to translate (footing embedded in rock) but it is free to deflect so the active case cannot fully develop. Similarly, since the wall is free to deflect, it is not completely restrained, and therefore the at-rest condition cannot fully develop. Selecting the lateral earth pressure coefficient as the average of the two conditions is based on engineering judgment.

1.3.1.2 The higher, and therefore more conservative EFP used in this analysis was calculated based on the following lateral earth pressure coefficient K = Ka +¾(Ko-Ka) = 0.259 +¾(0.441 – 0.259) = 0.396. With an assumed in-place density of the backfill of 130 pcf, (γ = 130) this gives an EFP of 51 pcf.

1.3.1.3 Allowable soil bearing condition is 4,000 psf. Actual rock capacity is higher.

1.3.1.4 There are no surcharge effects from the uphill MSE Walls. See appendix 'C' for details.

1.3.1.5 Stability ratio for overturning is a minimum of 2.0 to 1.0.

1.3.2 Seismic Condition 1: This upset condition consists of an earthquake event.

1.3.2.1 EFP of 62 pcf was used with a normal triangular, with increasing pressure toward the bottom of the wall. See Figure 1 and sheet 14 of Appendix 'B' for details.

1.3.2.2 Allowable soil bearing condition is 5,000 psf. Actual rock capacity is higher.

1.3.2.3 There are no surcharge effects from the uphill MSE Walls. See appendix 'C' for details.

1.3.2.4 Stability ratio for overturning is a minimum of 2.0 to 1.0.

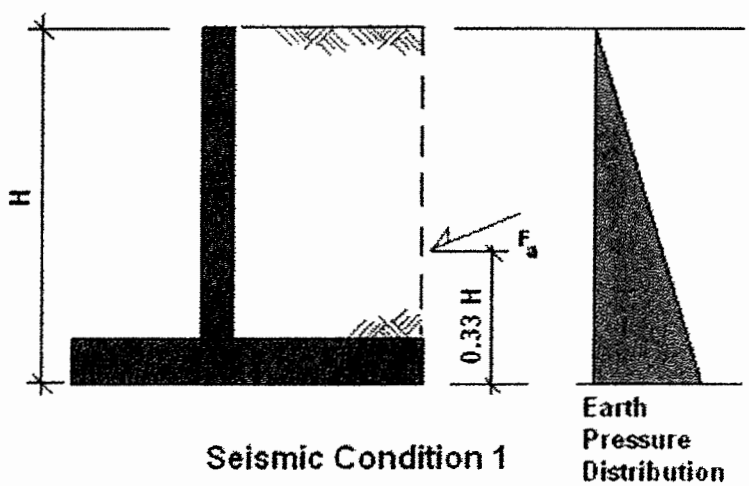

Figure 1

1.3.3 Compaction Equipment Load Case: This temporary load case consist of the following items:

1.3.3.1 EFP of 46 pcf. This value was calculated using the average of the active (Ka) and the at-rest (Ko) lateral earth pressure coefficients. The actual lateral earth pressure is somewhere between the active and the at-rest cases. The wall is not free to translate (footing embedded in rock) but it is free to deflect so the active case cannot fully develop. Similarly, since the wall is free to deflect, it is not completely restrained, and therefore the at-rest condition cannot fully develop. Selecting the lateral earth pressure coefficient as the average of the two conditions is based on engineering judgment. (See Sheet 9 of Appendix B) Since this is a temporary condition a more conservative approximation of the EFP is not warranted.

1.3.3.2 A surcharge from compaction equipment was applied behind the wall. This consisted of a 2,000 pound load spread over an 8'-0" width. Or 250 psf over 8'-0" continuous along the length of the wall. See diagrams that are included with each wall design for this load case, and figure 2.

1.3.3.3 Allowable soil bearing condition is 5,000 psf. Actual rock capacity is higher.

1.3.3.4 There are no surcharge effects from the uphill MSE Walls. See appendix 'C' for details.

1.3.3.5 Stability ratio for overturning is a minimum of 2.0 to 1.0.

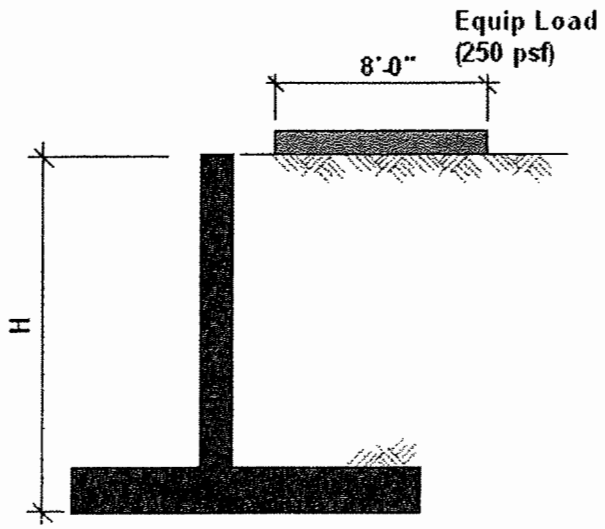

Compaction Equipment Load

Figure. 2

1.3.4 Seismic Condition 2: This upset condition consists of an earthquake event.

1.3.4.1 K_{AE} of 62 pcf was used with an inverse triangular distribution, with increasing pressure toward the bottom of the wall. See Figure 3 and sheets 15 to 17 of Appendix 'B' for details. Also see Appendix 'D' for a detailed discussion of the Mononobe-Okabe equations and their application.

1.3.4.2 Allowable soil bearing condition is 5,500 psf. Actual rock capacity is higher.

1.3.4.3 There are no surcharge effects from the uphill MSE Walls. See appendix 'C' for details.

1.3.4.4 Stability ratio for overturning is a minimum of 1.5 to 1.0.

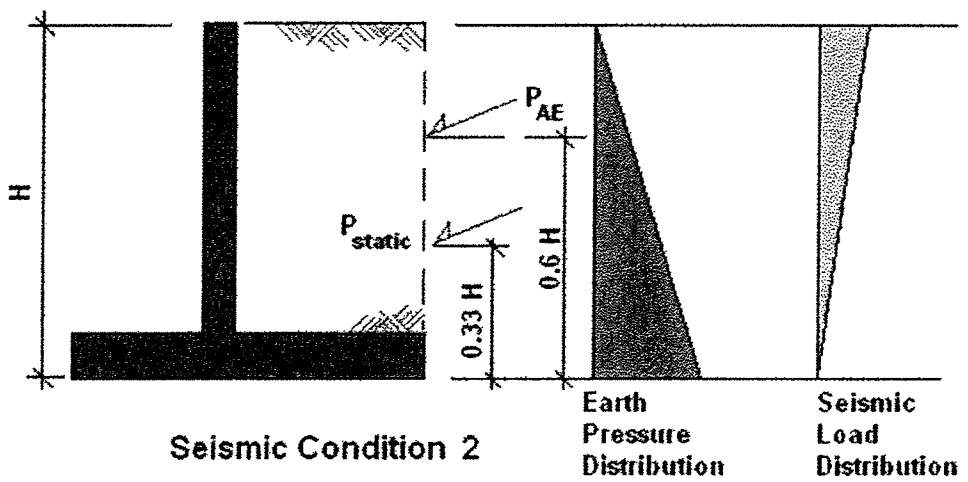

Figure 3

1.4 **Sliding Resistance**: The calculations for the sliding resistance of the retaining walls are based upon a friction between the base and the supporting rock. In general the results show a factor of less that 1.5 to 1. However in order for the base to move it would require the rock to shear, or the key in the footing to shear off. In addition the foundations will be dowel to the rock using 2-#7 bars at 4'-0" centers. This would give an additional shear capacity of 10,000 lbs. Per foot of wall, using a safety factor of 2.70. With this in mind and the high capacity of the rock to sustain loads sliding resistance is not an issue.

WALL MK. 'A'

Loading Case	Overturning Ratio	Sliding Ratio	Maximum Soil Bearing Pressure	Controlling Case for Strength Design	Remarks
Normal	3.65	2.12	980		
Seismic 1	3.00	1.74	1150		
Compaction Equipment	3.0	1.75	1230	+	
Seismic 2	2.6	1.56	870		

TCPI
436 Creamery Way, Suite 100
Exton, Pa 19341
Los Alamos Retaining Wall No. 1

Title : Wall 'A' H = 5' Normal
Job # : E-05129 Dsgnr: JJF
Description....
Low Level Wall "A" Height H = 5'-0" Normal Loads

Page: _____
Date: MAY 23,2005

This Wall in File: C:\Program Files\RP2005\los alamos rw.r

Retain Pro 2005 , 7-April-2005, (c) 1989-2005
www.retainpro.com/support for latest release
Registration # : RP-1141385 2005001

Cantilevered Retaining Wall Design

Code: IBC 2003

Criteria

Retained Height	=	5.00 ft
Wall height above soil	=	0.00 ft
Slope Behind Wall	=	0.00 : 1
Height of Soil over Toe	=	9.00 in
Water height over heel	=	0.0 ft
Wind on Stem	=	0.0 psf

Soil Data

Allow Soil Bearing	=	4,000.0 psf
Equivalent Fluid Pressure Method		
Heel Active Pressure	=	51.0 psf/ft
Toe Active Pressure	=	51.0 psf/ft
Passive Pressure	=	54.0 psf/ft
Soil Density	=	130.00 pcf
Footing||Soil Friction	=	0.650
Soil height to ignore for passive pressure	=	0.00 in

Footing Dimensions & Strengths

Toe Width	=	1.25 ft
Heel Width	=	2.75
Total Footing Width	=	4.00
Footing Thickness	=	15.00 in
Key Width	=	0.00 in
Key Depth	=	0.00 in
Key Distance from Toe	=	0.00 ft

f'c = 3,000 psi Fy = 60,000 psi
Footing Concrete Density = 150.00 pcf
Min. As % = 0.0018
Cover @ Top = 2.00 in @ Btm.= 3.00 in

Surcharge Loads

Surcharge Over Heel	=	0.0 psf
Used To Resist Sliding & Overturning		
Surcharge Over Toe	=	0.0 psf
Used for Sliding & Overturning		

Lateral Load Applied to Stem

Lateral Load	=	0.0 #/ft
...Height to Top	=	0.00 ft
...Height to Bottom	=	0.00 ft

Adjacent Footing Load

Adjacent Footing Load	=	0.0 lbs
Footing Width	=	0.00 ft
Eccentricity	=	0.00 in
Wall to Ftg CL Dist	=	0.00 ft
Footing Type		Line Load
Base Above/Below Soil at Back of Wall	=	0.0 ft
Poisson's Ratio	=	0.300

Axial Load Applied to Stem

Axial Dead Load	=	0.0 lbs
Axial Live Load	=	0.0 lbs
Axial Load Eccentricity	=	0.0 in

*Design Summary

Wall Stability Ratios

Overturning	=	3.65	OK
Sliding	=	2.11	OK
Total Bearing Load	=	2,972 lbs	
...resultant ecc.	=	2.53 in	
Soil Pressure @ Toe	=	978 psf	OK
Soil Pressure @ Heel	=	508 psf	OK
Allowable	=	4,000 psf	
Soil Pressure Less Than Allowable			
ACI Factored @ Toe	=	1,084 psf	
ACI Factored @ Heel	=	562 psf	
Footing Shear @ Toe	=	1.4 psi	OK
Footing Shear @ Heel	=	6.5 psi	OK
Allowable	=	82.2 psi	

Sliding Calcs (Vertical Component NOT Used)

Lateral Sliding Force	=	894.1 lbs	
less 100% Passive Force	= -	108.0 lbs	
less 100% Friction Force	= -	1,782.8 lbs	
Added Force Req'd	=	0.0 lbs	OK
....for 1.5 : 1 Stability	=	0.0 lbs	OK

Load Factors

Building Code	IBC 2003
Dead Load	1.200
Live Load	1.600
Earth, H	1.600
Wind, W	1.600
Seismic, E	1.000

Stem Construction

Top Stem

Design Height Above Ftg	ft =		Stem OK 0.00
Wall Material Above "Ht"	=		Concrete
Thickness	=		10.00
Rebar Size	=		# 5
Rebar Spacing	=		12.00
Rebar Placed at	=		Edge
Design Data			
fb/FB + fa/Fa	=		**0.169**
Total Force @ Section	lbs =		997.1
Moment....Actual	ft-# =		1,694.3
Moment.....Allowable	=		10,037.3
Shear.....Actual	psi =		11.1
Shear.....Allowable	psi =		82.2
Wall Weight	=		125.0
Rebar Depth 'd'	in =		7.50
LAP SPLICE IF ABOVE	in =		21.36
LAP SPLICE IF BELOW	in =		
HOOK EMBED INTO FTG	in =		9.59
Masonry Data			
f'm	psi =		
Fs	psi =		
Solid Grouting	=		
Special Inspection	=		
Modular Ratio 'n'	=		
Short Term Factor	=		
Equiv. Solid Thick.	=		
Masonry Block Type = Medium Weight			
Concrete Data			
f'c	psi =		3,000.0
Fy	psi =		60,000.0

Retain Pro 2005 , 7-April-2005, (c) 1989-2005
www.retainpro.com/support for latest release
Registration # : RP-1141385 2005001

Cantilevered Retaining Wall Design

Code: IBC 2003

Footing Design Results

		Toe	Heel	
Factored Pressure	=	1,084	562	psf
Mu' : Upward	=	804	1,185	ft-#
Mu' : Downward	=	267	2,548	ft-#
Mu: Design	=	537	1,362	ft-#
Actual 1-Way Shear	=	1.44	6.50	psi
Allow 1-Way Shear	=	82.16	82.16	psi
Toe Reinforcing	=	# 5 @ 12.00 in		
Heel Reinforcing	=	# 5 @ 12.00 in		
Key Reinforcing	=	None Spec'd		

Other Acceptable Sizes & Spacings

Toe: Not req'd, Mu < S * Fr
Heel: Not req'd, Mu < S * Fr
Key: No key defined

Summary of Overturning & Resisting Forces & Moments

Item		.....OVERTURNING..... Force lbs	Distance ft	Moment ft-#
Heel Active Pressure	=	996.1	2.08	2,075.2
Toe Active Pressure	=	-102.0	0.67	-68.0
Surcharge Over Toe	=			
Adjacent Footing Load	=			
Added Lateral Load	=			
Load @ Stem Above Soil	=			
Total	=	894.1	**O.T.M.** =	2,007.2

Resisting/Overturning Ratio = **3.65**

Vertical Loads used for Soil Pressure = 2,971.6 lbs

Vertical component of active pressure used for soil pressure

		.....RESISTING..... Force lbs	Distance ft	Moment ft-#
Soil Over Heel	=	1,245.8	3.04	3,789.4
Sloped Soil Over Heel	=			
Surcharge Over Heel	=			
Adjacent Footing Load	=			
Axial Dead Load on Stem	=		0.00	
Soil Over Toe	=	121.9	0.63	76.2
Surcharge Over Toe	=			
Stem Weight(s)	=	625.0	1.67	1,041.7
Earth @ Stem Transitions	=			
Footing Weight	=	750.0	2.00	1,500.0
Key Weight	=			
Vert. Component	=	228.9	4.00	915.4
	Total =	2,971.6 lbs	**R.M.=**	7,322.7

DESIGNER NOTES:

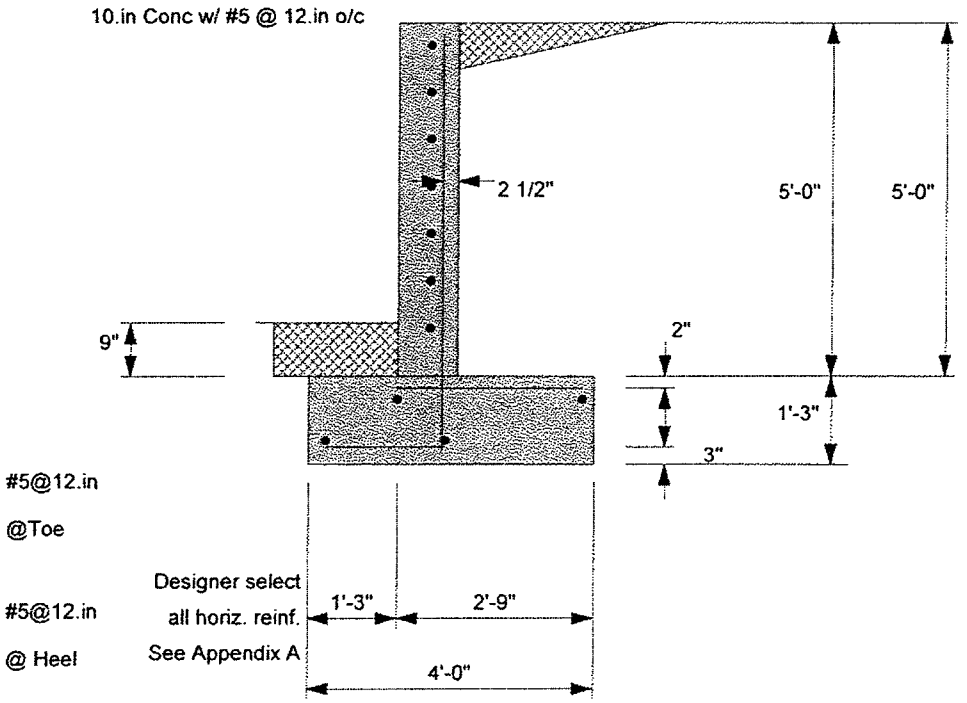
10.in Conc w/ #5 @ 12.in o/c
2 1/2"
5'-0"
5'-0"
9"
2"
1'-3"
3"
#5@12.in
@Toe
Designer select
all horiz. reinf.
See Appendix A
#5@12.in
@ Heel
1'-3"
2'-9"
4'-0"

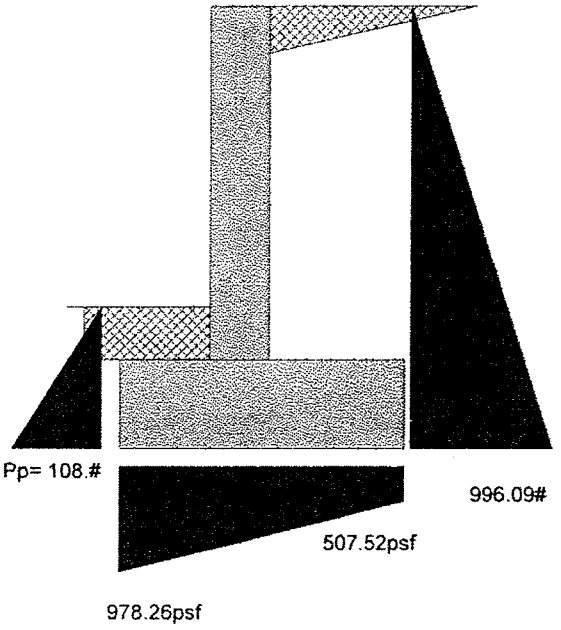
Pp= 108.#
996.09#
507.52psf
978.26psf

TCPI
436 Creamery Way, Suite 100
Exton, Pa 19341
Los Alamos Retaining Wall No. 1

Title : Wall 'A' H = 5' Seismic
Job # : E-05129 Dsgnr: JJF
Description....
Low Wall "A" Height H= 5'-0" Seismic load EFP = 62

Page: _____
Date: MAY 24,2005

This Wall in File: C:\Program Files\RP2005\los alamos rw.r

Retain Pro 2005 , 7-April-2005, (c) 1989-2005
www.retainpro.com/support for latest release
Registration # : RP-1141385 2005001

Cantilevered Retaining Wall Design

Code: IBC 2003

Criteria

Retained Height	=	5.00 ft
Wall height above soil	=	0.00 ft
Slope Behind Wall	=	0.00 : 1
Height of Soil over Toe	=	9.00 in
Water height over heel	=	0.0 ft
Wind on Stem	=	0.0 psf

Soil Data

Allow Soil Bearing	=	4,000.0 psf
Equivalent Fluid Pressure Method		
Heel Active Pressure	=	62.0 psf/ft
Toe Active Pressure	=	62.0 psf/ft
Passive Pressure	=	54.0 psf/ft
Soil Density	=	130.00 pcf
Footing||Soil Friction	=	0.650
Soil height to ignore for passive pressure	=	0.00 in

Footing Dimensions & Strengths

Toe Width	=	1.25 ft
Heel Width	=	2.75
Total Footing Width	=	4.00
Footing Thickness	=	15.00 in
Key Width	=	0.00 in
Key Depth	=	0.00 in
Key Distance from Toe	=	0.00 ft

f'c = 3,000 psi Fy = 60,000 psi
Footing Concrete Density = 150.00 pcf
Min. As % = 0.0018
Cover @ Top = 2.00 in @ Btm.= 3.00 in

Surcharge Loads

Surcharge Over Heel	=	0.0 psf
Used To Resist Sliding & Overturning		
Surcharge Over Toe	=	0.0 psf
Used for Sliding & Overturning		

Lateral Load Applied to Stem

Lateral Load	=	0.0 #/ft
...Height to Top	=	0.00 ft
...Height to Bottom	=	0.00 ft

Adjacent Footing Load

Adjacent Footing Load	=	0.0 lbs
Footing Width	=	0.00 ft
Eccentricity	=	0.00 in
Wall to Ftg CL Dist	=	0.00 ft
Footing Type		Line Load
Base Above/Below Soil at Back of Wall	=	0.0 ft
Poisson's Ratio	=	0.300

Axial Load Applied to Stem

Axial Dead Load	=	0.0 lbs
Axial Live Load	=	0.0 lbs
Axial Load Eccentricity	=	0.0 in

*Design Summary

Wall Stability Ratios

Overturning	=	2.99	OK
Sliding	=	1.74	OK
Total Bearing Load	=	2,964 lbs	
...resultant ecc.	=	4.35 in	
Soil Pressure @ Toe	=	1,144 psf	OK
Soil Pressure @ Heel	=	338 psf	OK
Allowable	=	4,000 psf	
Soil Pressure Less Than Allowable			
ACI Factored @ Toe	=	1,270 psf	
ACI Factored @ Heel	=	375 psf	
Footing Shear @ Toe	=	1.9 psi	OK
Footing Shear @ Heel	=	7.7 psi	OK
Allowable	=	82.2 psi	

Sliding Calcs (Vertical Component NOT Used)

Lateral Sliding Force	=	1,086.9 lbs	
less 100% Passive Force	= -	108.0 lbs	
less 100% Friction Force	= -	1,782.8 lbs	
Added Force Req'd	=	0.0 lbs	OK
....for 1.5 : 1 Stability	=	0.0 lbs	OK

Load Factors

Building Code	IBC 2003
Dead Load	1.200
Live Load	1.600
Earth, H	1.400
Wind, W	1.600
Seismic, E	1.000

Stem Construction

Top Stem

		Stem OK
Design Height Above Ftg	ft =	0.00
Wall Material Above "Ht"	=	Concrete
Thickness	=	10.00
Rebar Size	=	# 5
Rebar Spacing	=	12.00
Rebar Placed at	=	Edge

Design Data

fb/FB + fa/Fa	=	**0.180**
Total Force @ Section	lbs =	1,060.6
Moment....Actual	ft-# =	1,802.2
Moment.....Allowable	=	10,037.3
Shear.....Actual	psi =	11.8
Shear.....Allowable	psi =	82.2
Wall Weight	=	125.0
Rebar Depth 'd'	in =	7.50
LAP SPLICE IF ABOVE	in =	21.36
LAP SPLICE IF BELOW	in =	
HOOK EMBED INTO FTG	in =	9.59

Masonry Data

f'm	psi =	
Fs	psi =	
Solid Grouting	=	
Special Inspection	=	
Modular Ratio 'n'	=	
Short Term Factor	=	
Equiv. Solid Thick.	=	

Masonry Block Type = Medium Weight

Concrete Data

f'c	psi =	3,000.0
Fy	psi =	60,000.0

Cantilevered Retaining Wall Design

Code: IBC 2003

Footing Design Results

		Toe	Heel
Factored Pressure	=	1,270	375 psf
Mu' : Upward	=	920	952 ft-#
Mu' : Downward	=	267	2,526 ft-#
Mu: Design	=	652	1,574 ft-#
Actual 1-Way Shear	=	1.85	7.67 psi
Allow 1-Way Shear	=	82.16	82.16 psi
Toe Reinforcing	=	# 5 @ 12.00 in	
Heel Reinforcing	=	# 5 @ 12.00 in	
Key Reinforcing	=	None Spec'd	

Other Acceptable Sizes & Spacings

Toe: Not req'd, Mu < S * Fr
Heel: Not req'd, Mu < S * Fr
Key: No key defined

Summary of Overturning & Resisting Forces & Moments

Item		.....OVERTURNING..... Force lbs	Distance ft	Moment ft-#
Heel Active Pressure	=	1,210.9	2.08	2,522.8
Toe Active Pressure	=	-124.0	0.67	-82.7
Surcharge Over Toe	=			
Adjacent Footing Load	=			
Added Lateral Load	=			
Load @ Stem Above Soil	=			
Total	=	1,086.9	**O.T.M.** =	2,440.1

Resisting/Overturning Ratio = **2.99**

Vertical Loads used for Soil Pressure = 2,964.3 lbs

Vertical component of active pressure used for soil pressure

		.....RESISTING..... Force lbs	Distance ft	Moment ft-#
Soil Over Heel	=	1,245.8	3.04	3,789.4
Sloped Soil Over Heel	=			
Surcharge Over Heel	=			
Adjacent Footing Load	=			
Axial Dead Load on Stem	=		0.00	
Soil Over Toe	=	121.9	0.63	76.2
Surcharge Over Toe	=			
Stem Weight(s)	=	625.0	1.67	1,041.7
Earth @ Stem Transitions	=			
Footing Weight	=	750.0	2.00	1,500.0
Key Weight	=			
Vert. Component	=	221.6	4.00	886.6
Total	=	2,964.3 lbs	**R.M.**=	7,293.8

DESIGNER NOTES:

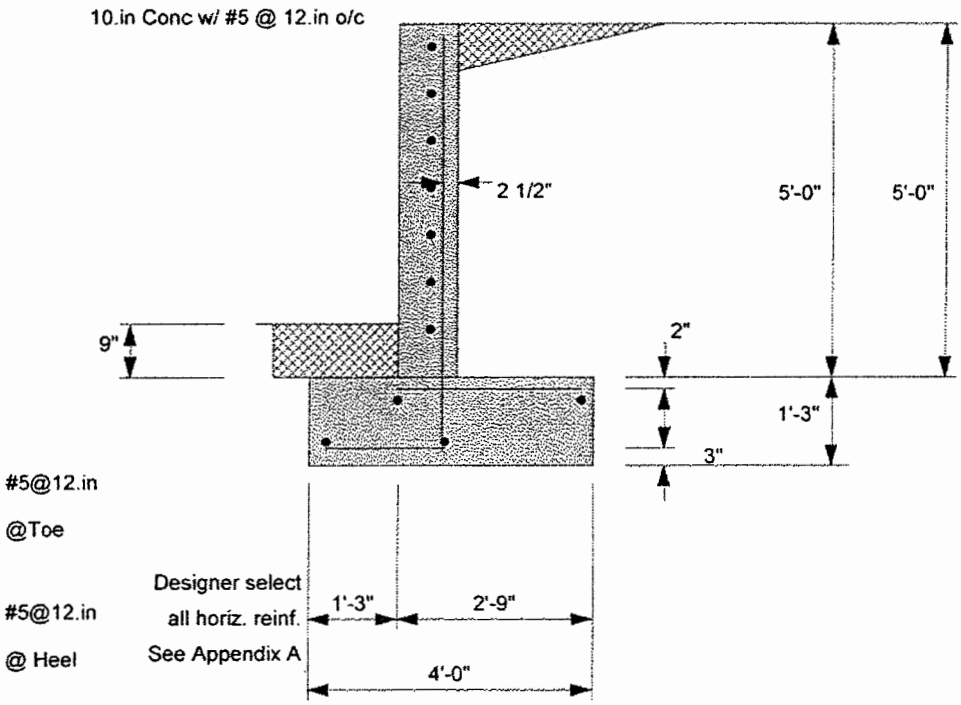
10.in Conc w/ #5 @ 12.in o/c
2 1/2"
5'-0"
5'-0"
9"
2"
1'-3"
3"
#5@12.in
@Toe
Designer select
all horiz. reinf.
See Appendix A
#5@12.in
@ Heel
1'-3"
2'-9"
4'-0"

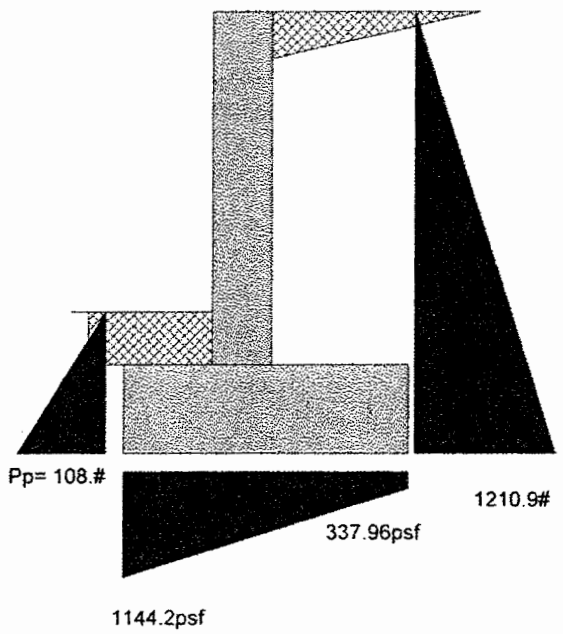
Pp= 108.#
1210.9#
337.96psf
1144.2psf

TCPI
436 Creamery Way, Suite 100
Exton, Pa 19341
Los Alamos Retaining Wall No. 1

Title : Wall 'A' H= 5' Equiplent Load
Job # : E-05129 Dsgnr: JJF
Description....
Wall "A" Height (H) = 5'-0" Equipment Load with EFP =

Page: _____
Date: MAY 25,2005

This Wall in File: C:\Program Files\RP2005\los alamos rw.r

Retain Pro 2005 , 7-April-2005, (c) 1989-2005
www.retainpro.com/support for latest release
Registration # : RP-1141385 2005001

Cantilevered Retaining Wall Design

Code: IBC 2003

Criteria

Retained Height	=	5.00 ft
Wall height above soil	=	0.00 ft
Slope Behind Wall	=	0.00 : 1
Height of Soil over Toe	=	9.00 in
Water height over heel	=	0.0 ft
Wind on Stem	=	0.0 psf

Soil Data

Allow Soil Bearing	=	5,000.0 psf
Equivalent Fluid Pressure Method		
Heel Active Pressure	=	46.0 psf/ft
Toe Active Pressure	=	46.0 psf/ft
Passive Pressure	=	54.0 psf/ft
Soil Density	=	130.00 pcf
Footing||Soil Friction	=	0.650
Soil height to ignore for passive pressure	=	0.00 in

Footing Dimensions & Strengths

Toe Width	=	1.25 ft
Heel Width	=	2.75
Total Footing Width	=	4.00
Footing Thickness	=	15.00 in
Key Width	=	0.00 in
Key Depth	=	0.00 in
Key Distance from Toe	=	0.00 ft

f'c = 3,000 psi Fy = 60,000 psi
Footing Concrete Density = 150.00 pcf
Min. As % = 0.0018
Cover @ Top = 2.00 in @ Btm.= 3.00 in

Surcharge Loads

Surcharge Over Heel	=	0.0 psf
Used To Resist Sliding & Overturning		
Surcharge Over Toe	=	0.0 psf
Used for Sliding & Overturning		

Lateral Load Applied to Stem

Lateral Load	=	0.0 #/ft
...Height to Top	=	0.00 ft
...Height to Bottom	=	0.00 ft

Adjacent Footing Load

Adjacent Footing Load	=	2,000.0 lbs
Footing Width	=	8.00 ft
Eccentricity	=	0.00 in
Wall to Ftg CL Dist	=	4.00 ft
Footing Type		Line Load
Base Above/Below Soil at Back of Wall	=	0.0 ft
Poisson's Ratio	=	0.300

Axial Load Applied to Stem

Axial Dead Load	=	0.0 lbs
Axial Live Load	=	0.0 lbs
Axial Load Eccentricity	=	0.0 in

*Design Summary

Wall Stability Ratios

Overturning	=	2.97	OK
Sliding	=	1.75	OK
Total Bearing Load	=	3,297 lbs	
...resultant ecc.	=	3.94 in	
Soil Pressure @ Toe	=	1,231 psf	OK
Soil Pressure @ Heel	=	418 psf	OK
Allowable	=	5,000 psf	
Soil Pressure Less Than Allowable			
ACI Factored @ Toe	=	1,423 psf	
ACI Factored @ Heel	=	484 psf	
Footing Shear @ Toe	=	2.1 psi	OK
Footing Shear @ Heel	=	6.2 psi	OK
Allowable	=	82.2 psi	

Sliding Calcs (Vertical Component NOT Used)

Lateral Sliding Force	=	1,203.1 lbs	
less 100% Passive Force	= -	108.0 lbs	
less 100% Friction Force	= -	1,994.8 lbs	
Added Force Req'd	=	0.0 lbs	OK
....for 1.5 : 1 Stability	=	0.0 lbs	OK

Load Factors

Building Code	IBC 2003
Dead Load	1.200
Live Load	1.600
Earth, H	1.600
Wind, W	1.600
Seismic, E	1.000

Stem Construction

Top Stem

		Stem OK
Design Height Above Ftg	ft =	0.00
Wall Material Above "Ht"	=	Concrete
Thickness	=	10.00
Rebar Size	=	# 5
Rebar Spacing	=	12.00
Rebar Placed at	=	Edge
Design Data		
fb/FB + fa/Fa	=	**0.241**
Total Force @ Section	lbs =	1,376.0
Moment....Actual	ft-# =	2,415.9
Moment.....Allowable	=	10,037.3
Shear.....Actual	psi =	15.3
Shear.....Allowable	psi =	82.2
Wall Weight	=	125.0
Rebar Depth 'd'	in =	7.50
LAP SPLICE IF ABOVE	in =	21.36
LAP SPLICE IF BELOW	in =	
HOOK EMBED INTO FTG	in =	9.59
Masonry Data		
f'm	psi =	
Fs	psi =	
Solid Grouting	=	
Special Inspection	=	
Modular Ratio 'n'	=	
Short Term Factor	=	
Equiv. Solid Thick.	=	
Masonry Block Type = Medium Weight		
Concrete Data		
f'c	psi =	3,000.0
Fy	psi =	60,000.0

Cantilevered Retaining Wall Design

Code: IBC 2003

Footing Design Results

		Toe	Heel	
Factored Pressure	=	1,423	484	psf
Mu' : Upward	=	1,035	1,164	ft-#
Mu' : Downward	=	267	2,546	ft-#
Mu: Design	=	768	1,382	ft-#
Actual 1-Way Shear	=	2.13	6.22	psi
Allow 1-Way Shear	=	82.16	82.16	psi
Toe Reinforcing	=	# 5 @ 12.00 in		
Heel Reinforcing	=	# 5 @ 12.00 in		
Key Reinforcing	=	None Spec'd		

Other Acceptable Sizes & Spacings

Toe: Not req'd, Mu < S * Fr
Heel: Not req'd, Mu < S * Fr
Key: No key defined

Summary of Overturning & Resisting Forces & Moments

Item		.....OVERTURNING..... Force lbs	Distance ft	Moment ft-#
Heel Active Pressure	=	898.4	2.08	1,871.7
Toe Active Pressure	=	-92.0	0.67	-61.3
Surcharge Over Toe	=			
Adjacent Footing Load	=	396.7	2.50	991.0
Added Lateral Load	=			
Load @ Stem Above Soil	=			
Total	=	1,203.1	**O.T.M.** =	2,801.4

Resisting/Overturning Ratio = **2.97**

Vertical Loads used for Soil Pressure = 3,297.2 lbs

Vertical component of active pressure used for soil pressure

		.....RESISTING..... Force lbs	Distance ft	Moment ft-#
Soil Over Heel	=	1,245.8	3.04	3,789.4
Sloped Soil Over Heel	=			
Surcharge Over Heel	=			
Adjacent Footing Load	=	326.2	3.04	992.3
Axial Dead Load on Stem	=		0.00	
Soil Over Toe	=	121.9	0.63	76.2
Surcharge Over Toe	=			
Stem Weight(s)	=	625.0	1.67	1,041.7
Earth @ Stem Transitions	=			
Footing Weight	=	750.0	2.00	1,500.0
Key Weight	=			
Vert. Component	=	228.2	4.00	912.9
Total	=	3,297.2 lbs	**R.M.**=	8,312.5

DESIGNER NOTES:

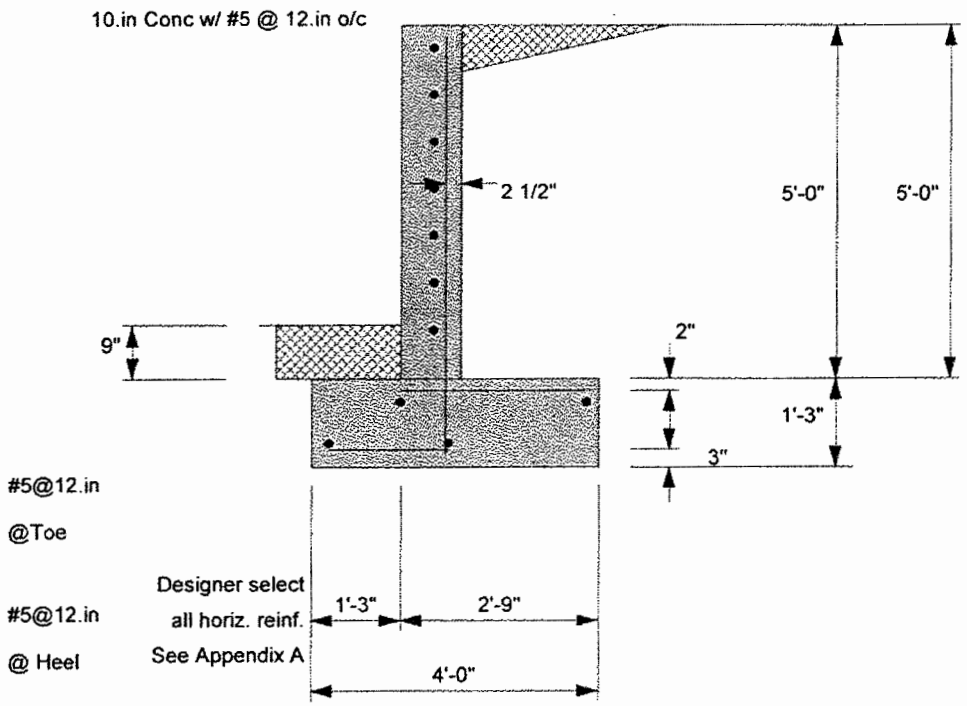
10.in Conc w/ #5 @ 12.in o/c
2 1/2"
5'-0"
5'-0"
9"
2"
1'-3"
3"
#5@12.in
@Toe
Designer select
all horiz. reinf.
See Appendix A
#5@12.in
@ Heel
1'-3"
2'-9"
4'-0"

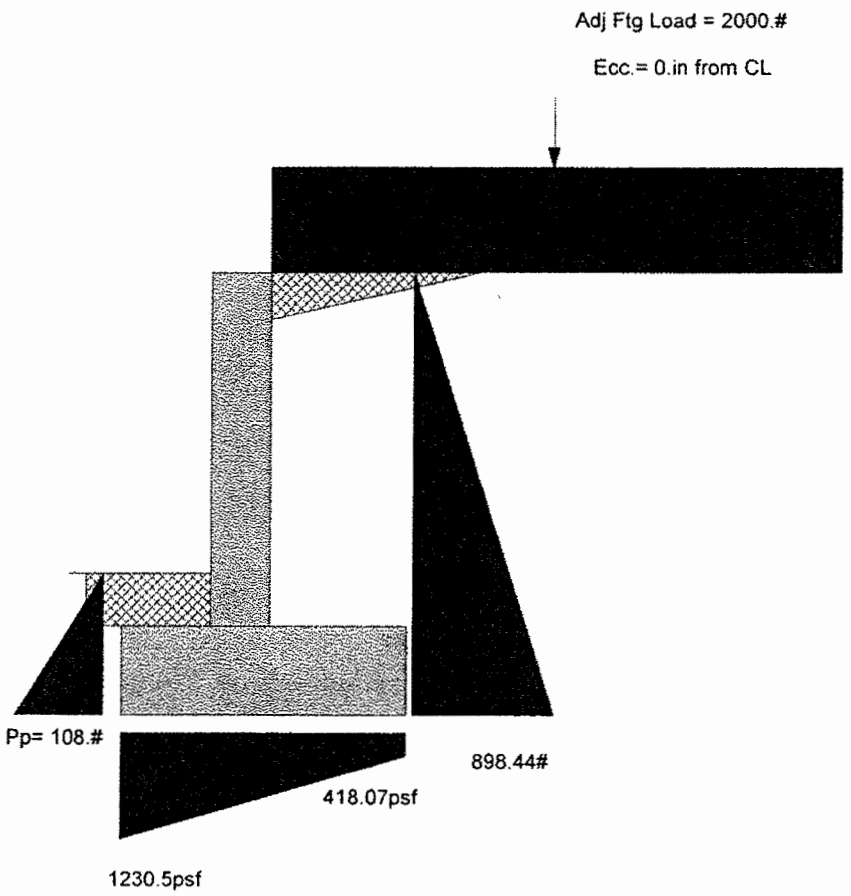
Adj Ftg Load = 2000.#
Ecc.= 0.in from CL
Pp= 108.#
898.44#
418.07psf
1230.5psf

WALL Mark 'A' Seismic Loads

Definitions:

B = Width of Toe (feet)
C = Width of Heel (feet)
W = Width of Base (feet)
γ = density of backfill (pcf)
$\gamma_{concrete}$ density = 150 pcf
EFP_{static} = Design equivalent fluid pressure (pcf), static condition.
EFP_{AE} = Design equivalent fluid pressure (pcf), Active Earth pressure under seismic conditions..
ϕ = Internial angle of friction of the soil.
δ = Friction angle of soil to concrete wall.
K_h = Alternate seismic force developed from the Geotechnical Calculations page 12 in Appendix 'B'

h wall = Height of Wall over base (feet)
t_{base} = thickness of Base (feet)
t_{stem} = Thickness of Stem (feet)

Wall Mk. 'A' Data:

$B := 1.25$ (feet) $h_{wall} := 5.0$ (feet) $t_{stem} := 0.83$ (feet)

$C := 1.92$ (feet) $W := 4.00$ (feet) $t_{base} := 1.25$ (feet)

Soil Data: $\gamma := 130$ (pcf) $\delta := 22 \cdot deg$ $\phi := 32 \cdot deg$

$EFP_{static} := 46$ (pcf)

$EFP_{AE} := 62$ (pcf)

$K_h := 0.09$

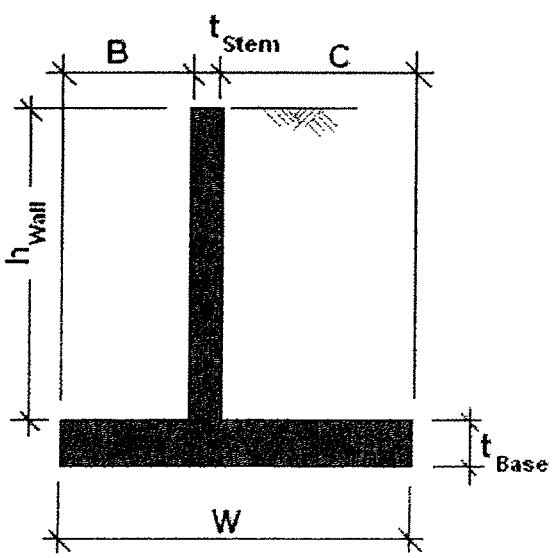

WALL STABILITY ANALYSIS

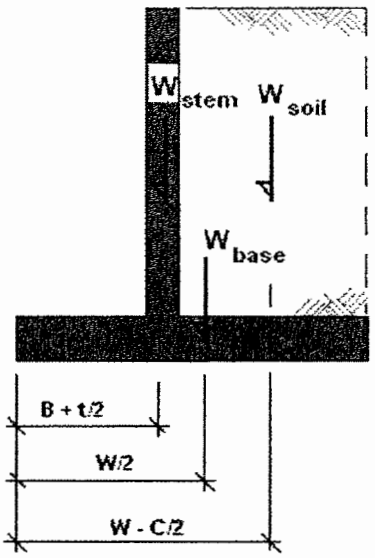

Weights: (kips.per foot)

$W_{stem} := (0.150) \cdot h_{wall} \cdot t_{stem}$ $W_{stem} = 0.622$

$W_{base} := (0.150) \cdot W \cdot t_{base}$ $W_{base} = 0.75$

$W_{soil} := \frac{\gamma \cdot h_{wall} \cdot C}{1000}$ $W_{soil} = 1.248$

$H := h_{wall} + t_{base}$ $H = 6.25$ (feet)

Stabilizing Forces

Driving Forces:

$P_{ST} := \frac{(EFP_{static}) \cdot \frac{1}{2} \cdot (H)^2}{1000}$ $P_{ST} = 0.898$ (kips)

$P_{SE} := \frac{(EFP_{AE}) \cdot \frac{1}{2} \cdot (H)^2}{1000}$ $P_{SE} = 1.211$ (kips)

$\Delta P_1 := P_{SE} - P_{ST}$ $\Delta P_1 = 0.313$ (kips)

$\Delta P_2 := \frac{K_h \cdot \gamma \cdot (H)^2}{1000}$ $\Delta P_2 = 0.457$ (kips)

The larger value of either ΔP_1 or ΔP_2 is to be used in the seismic analysis

Let: $\Delta := \begin{pmatrix} \Delta P_1 \\ \Delta P_2 \end{pmatrix}$ $\Delta P := \max(\Delta)$ $\Delta P = 0.457$ (kips)

Driving Forces and Moments about the Toe:

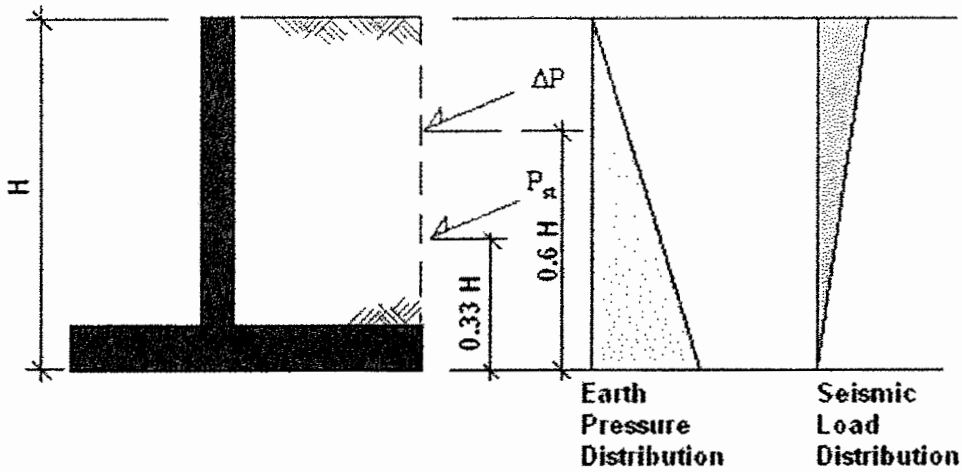

Horizontal Driving Force (**HDF**) is the sum of P_{st} and ΔP in the horizontal direction:

$HDF := (P_{ST} + \Delta P)\cdot\cos(\delta)$ $\quad HDF = 1.257$ (kips)

Driving Moment ($\mathbf{M_d}$) is the sum of the driving moments about the Toe.

$M_d := (P_{ST}\cdot 0.333\cdot H)\cdot\cos(\delta) + (\Delta P\cdot 0.6\cdot H)\cdot\cos(\delta)$ $\quad M_d = 3.323$ (ft-kips)

Resisting Forces and Moments about the Toe:

Resisting Forces (**RF**) neglecting passive pressure, a conservative analysis:

$RF := \tan(\phi)(W_{stem} + W_{base} + W_{soil} + P_{ST}\cdot\sin(\delta) + \Delta P\cdot\sin(\delta))$

$RF = 1.955$ (kips)

"Factor of Safety" against sliding is the ratio of **RF** to **HDF**

$Ratio_{sliding} := \frac{RF}{HDF}$ $\quad Ratio_{sliding} = 1.555$

Resisting Moments about the Toe M_r :

$$M_r := W_{stem}\cdot(B + t_{stem}) + W_{base}\cdot\left(\frac{W}{2}\right) + W_{soil}\cdot\left(W - \frac{C}{2}\right) + (P_{ST} + \Delta P)\cdot W\cdot\sin(\delta)$$

$M_r = 8.62$ (ft-kips)

"Factor of Safety" against overturning the ratio of $\mathbf{M_r}$ to $\mathbf{M_d}$

$$Ratio_{OT} := \frac{M_r}{M_d} \qquad Ratio_{OT} = 2.594$$

Calculate Soil Bearing Pressurs:

Net Moment: $\Delta M := M_r - M_d$ $\Delta M = 5.297$ (ft-kips)

$$X := \frac{\Delta M}{\left(W_{stem} + W_{base} + W_{soil} + P_{ST}\cdot\sin(\delta) + \Delta P\cdot\sin(\delta)\right)} \qquad X = 1.693 \quad \text{(feet)}$$

$$R := \left(W_{stem} + W_{base} + W_{soil} + P_{ST}\cdot\sin(\delta) + \Delta P\cdot\sin(\delta)\right) \qquad R = 3.128 \quad \text{(kips)}$$

Eccentricity (e): $e := \frac{W}{2} - X$ $e = 0.307$ (feet) $\frac{W}{6} = 0.667$ (feet)

$$Eccentricity := \begin{cases} \text{"OK Within Middle Third"} & \text{if } e \le \frac{W}{6} \\ \text{"Non in Middle one-third"} & \text{otherwise} \end{cases}$$

Eccentricity = "OK Within Middle Third"

$$SP_2 := \frac{R}{W}\cdot\left(1 + \frac{e}{W}\right) \qquad SP_2 = 0.842$$ Maximum Soil Pearing Pressure (kips/ft^2)

$$SP_1 := \frac{R}{W}\cdot\left(1 - \frac{e}{W}\right) \qquad SP_1 = 0.722$$ Minimum Soil Pearing Pressure (kips/ft^2)

Concrete Design:

The design on the concrete elements will be in accordance with ACI 318-02.

See Section 9.2 of ACI 319-02

$U_{DL} := 1.2 \qquad U_H := 1.6 \qquad U_E := 1.0$

$$R_{ult} := \left(U_{DL} \cdot W_{stem} + U_{DL} \cdot W_{base} + U_E \cdot W_{soil} + U_E \cdot P_{ST} \cdot \sin(\delta) + U_E \cdot \Delta P \cdot \sin(\delta)\right)$$

$$M_{d_ult} := U_E \cdot \left[\left(P_{ST} \cdot 0.333 \cdot H\right) \cdot \cos(\delta) + \left(\Delta P \cdot 0.6 \cdot H\right) \cdot \cos(\delta)\right]$$

$$M_{r_ult_1} := U_{DL} \cdot W_{stem} \cdot \left(B + t_{stem}\right) + U_{DL} \cdot W_{base} \cdot \left(\frac{W}{2}\right) + U_{DL} \cdot W_{soil} \cdot \left(W - \frac{C}{2}\right)$$

$$M_{r_ult_2} := U_{DL} \cdot \left[\left(P_{ST} + \Delta P\right) \cdot W \cdot \sin(\delta)\right]$$

$$M_{r_ult} := M_{r_ult_1} + M_{r_ult_2}$$

Net Ultimate Moment: $\Delta M_{ult} := M_{r_ult} - M_{d_ult} \qquad \Delta M_{ult} = 7.021$ (ft-kips)

$X_{ult} := \dfrac{\Delta M_{ult}}{\left(R_{ult}\right)} \qquad X_{ult} = 2.063$ (feet)

$R_{ult} = 3.403$ (kips)

Eccentricity (e): $e_{ult} := \dfrac{W}{2} - X_{ult} \qquad e_{ult} = -0.063$ (feet) $\qquad \dfrac{W}{6} = 0.667$ (feet)

$$\text{Eccentricity} := \begin{cases} \text{"OK Within Middle Third"} & \text{if } e_{ult} \le \dfrac{W}{6} \\ \text{"Non in Middle one-third"} & \text{otherwise} \end{cases}$$

Eccentricity = "OK Within Middle Third"

$SP_{2_ult} := \dfrac{R_{ult}}{W} \cdot \left(1 + \dfrac{e_{ult}}{W}\right) \qquad SP_{2_ult} = 0.837$ Maximum Soil Pearing Pressure (kips/ft^2)

$SP_{1_ult} := \frac{R_{ult}}{W} \cdot \left(1 - \frac{e_{ult}}{W}\right)$ $SP_{1_ult} = 0.864$ Minimum Soil Pearing Pressure (kips/ft²)

$\Delta SP_{ult} := SP_{2_ult} - SP_{1_ult}$ $\Delta SP_{ult} = -0.027$ (kips/ft²)

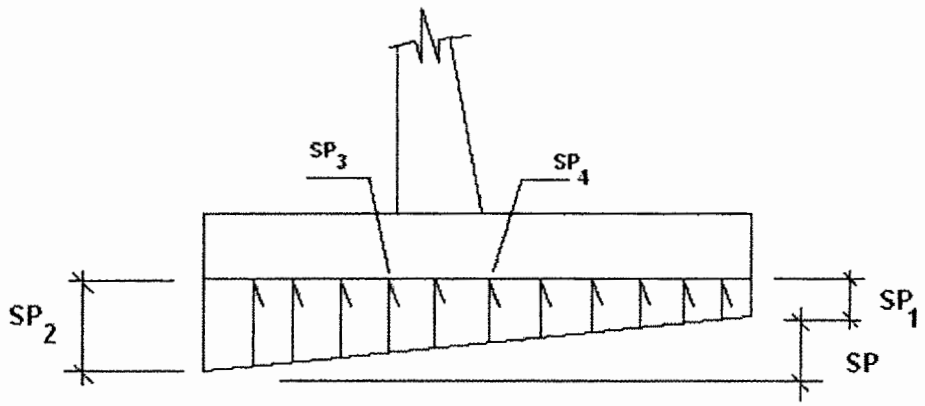

Pressure Diagram - Toe & Heel

Soil Pressure at Front Face of Stem:

$SP_{3_ult} := SP_{2_ult} - \frac{\Delta SP_{ult}}{W} \cdot (B)$ $SP_{3_ult} = 0.846$ (ksf)

Soil Pressure at Rear Face of Stem:

$SP_{4_ult} := SP_{2_ult} - \frac{\Delta SP_{ult}}{W} \cdot (B + t_{stem})$ $SP_{4_ult} = 0.851$ (ksf)

Moment at Front Face of Stem:

$$M_{toe} := SP_{3_ult} \cdot \frac{B^2}{2} + (SP_{2_ult} - SP_{3_ult}) \cdot \frac{(B)}{2} \cdot \left(\frac{2}{3}\right) \cdot B - U_{DL} \cdot (0.150) \cdot t_{base} \cdot \left(\frac{B^2}{2}\right)$$

$M_{toe} = 0.48$ (ft-kips)

Concrete Data:

$f'_c := 3$ ksi $\quad f_y := 60$ ksi $\quad M_u := M_{toe}$ ft-kips

$b := 12$ inches $\quad d := (12)\cdot t_{base} - 4 \quad d = 11$ inches $\quad \phi_f := 0.90$

A_s calculation is from CRSI Handbook

$$A_{s_required} := \frac{1.7\cdot f'_c\cdot b\cdot d}{2\cdot f_y} - \frac{1}{2}\cdot\sqrt{\frac{2.89\cdot(f'_c\cdot b\cdot d)^2}{(f_y)^2} - \frac{6.8\cdot f'_c\cdot b\cdot M_u\cdot 12}{\phi_f\cdot(f_y)^2}}$$

$A_{s_required} = 9.715\times 10^{-3}$ Inches^2 $\quad \rho := \frac{A_{s_required}}{12\cdot d} \quad \rho = 0.0001$

Shear in Toe:

Soil Pressure at d from front face:

$$SP_{31_ult} := SP_{2_ult} - \frac{\Delta SP_{ult}}{W}\cdot\left(B - \frac{d}{12}\right) \quad SP_{31_ult} = 0.839 \quad \text{(ksf)}$$

$$V_{toe} := SP_{31_ult}\cdot\left(B - \frac{d}{12}\right) + (SP_{2_ult} - SP_{31_ult})\cdot\left(\frac{1}{2}\right)\cdot\left(B - \frac{d}{12}\right)$$

$V_{toe} = 0.279$ (kips/foot)

$$\phi V_n := \frac{0.75\cdot 12\cdot d\cdot(2)\cdot\sqrt{f'_c\cdot 1000}}{1000} \quad \phi V_n = 10.845 \quad \text{(kips/foot)}$$

Moment at Rear Face of Stem in the Heel:

$$M_{heel} := SP_{1_ult}\cdot\frac{C^2}{2} + (SP_{4_ult} - SP_{1_ult})\cdot\frac{(C)}{2}\cdot\left(\frac{1}{3}\right)\cdot C - U_{DL}\cdot(0.150)\cdot t_{base}\cdot\left(\frac{C^2}{2}\right)$$

$M_{heel} = 1.17$ (ft-kips) Let: $M_u := M_{heel}$

A_s calculation is from CRSI Handbook

$$A_{s_required} := \frac{1.7 \cdot f'_c \cdot b \cdot d}{2 \cdot f_y} - \frac{1}{2} \cdot \sqrt{\frac{2.89 \cdot (f'_c \cdot b \cdot d)^2}{(f_y)^2} - \frac{6.8 \cdot f'_c \cdot b \cdot M_u \cdot 12}{\phi f \cdot (f_y)^2}}$$

$A_{s_required} = 0.024$ Inches^2 $\rho := \frac{A_{s_required}}{12 \cdot d}$ $\rho = 0.0002$

Shear in Hell:

Soil Pressure at d from front rear face of stem:

$$SP_{41_ult} := SP_{1_ult} + \frac{\Delta SP_{ult}}{W} \cdot \left(C - \frac{d}{12}\right) \quad SP_{41_ult} = 0.857 \quad \text{(ksf)}$$

$$V_{heel} := SP_{1_ult} \cdot \left(C - \frac{d}{12}\right) + \left(SP_{41_ult} - SP_{1_ult}\right) \cdot \left(\frac{1}{2}\right) \cdot \left(C - \frac{d}{12}\right)$$

$V_{heel} = 0.864$ (kips/foot)

$$\phi V_n := \frac{0.75 \cdot 12 \cdot d \cdot (2) \cdot \sqrt{f'_c \cdot 1000}}{1000} \quad \phi V_n = 10.845 \quad \text{(kips/foot)}$$

Moments in Stem:

Driving Forces:

$$P_{ST} := \frac{(EFP_{static}) \cdot \frac{1}{2} \cdot (h_{wall})^2}{1000} \quad P_{ST} = 0.575 \quad \text{(kips)}$$

$$P_{SE} := \frac{(EFP_{AE}) \cdot \frac{1}{2} \cdot (h_{wall})^2}{1000} \quad P_{SE} = 0.775 \quad \text{(kips)}$$

$\Delta P_1 := P_{SE} - P_{ST}$ $\Delta P_1 = 0.2$ (kips)

$$\Delta P_2 := \frac{K_h \cdot \gamma \cdot (h_{wall})^2}{1000} \qquad \Delta P_2 = 0.292 \qquad \text{(kips)}$$

The larger value of either ΔP_1 or ΔP_2 is to be used in the seismic analysis

Let: $\Delta := \begin{pmatrix} \Delta P_1 \\ \Delta P_2 \end{pmatrix}$ $\qquad \Delta P := \max(\Delta) \qquad \Delta P = 0.292 \qquad$ (kips)

$$M_{stem} := U_E \cdot \left[\left(P_{ST} \cdot \cos(\delta) \cdot 0.333 h_{wall} \right) + \left(\Delta P \cdot 0.600 \cdot h_{wall} \right) \right]$$

$M_{stem} = 1.765$ (ft-kips) Let: $M_u := M_{stem}$ $\qquad d := 12 t_{stem} - 3.0$

$d = 6.96$ (inches)

A_s calculation is from CRSI Handbook

$$A_{s_required} := \frac{1.7 \cdot f'_c \cdot b \cdot d}{2 \cdot f_y} - \frac{1}{2} \cdot \sqrt{\frac{2.89 \cdot (f'_c \cdot b \cdot d)^2}{(f_y)^2} - \frac{6.8 \cdot f'_c \cdot b \cdot M_u \cdot 12}{\phi_f \cdot (f_y)^2}}$$

$A_{s_required} = 0.057$ Inches^2 $\qquad \rho := \frac{A_{s_required}}{12 \cdot d} \qquad \rho = 0.0007$

WALL MK. 'B'

Loading Case	Overturning Ratio	Sliding Ratio	Maximum Soil Bearing Pressure	Controlling Case for Strength Design	Remarks
Normal	2.58	1.60	2100		
Seismic 1	2.12	1.31	2600		
Compaction Equipment	2.04	1.33	2800	✓	
Seismic 2	1.89	1.30	1660		

.25
.28
.37

TCPI
436 Creamery Way, Suite 100
Exton, Pa 19341
Los Alamos Retaining Wall No. 1

Title : Wall "B" H = 10 Normal
Job # : E-05129 Dsgnr: JJF
Description....
Wall 'B' Height (H) =10'-0" Normal Loads EFP = 51

Page: _____
Date: MAY 24,2005

This Wall in File: C:\Program Files\RP2005\los alamos rw.r

Retain Pro 2005 , 7-April-2005, (c) 1989-2005
www.retainpro.com/support for latest release
Registration # : RP-1141385 2005001

Cantilevered Retaining Wall Design

Code: IBC 2003

Criteria

Retained Height	=	10.00 ft
Wall height above soil	=	0.00 ft
Slope Behind Wall	=	0.00 : 1
Height of Soil over Toe	=	6.00 in
Water height over heel	=	0.0 ft
Wind on Stem	=	0.0 psf

Soil Data

Allow Soil Bearing	=	4,000.0 psf
Equivalent Fluid Pressure Method		
Heel Active Pressure	=	51.0 psf/ft
Toe Active Pressure	=	51.0 psf/ft
Passive Pressure	=	54.0 psf/ft
Soil Density	=	130.00 pcf
Footing||Soil Friction	=	0.650
Soil height to ignore for passive pressure	=	0.00 in

Footing Dimensions & Strengths

Toe Width	=	2.00 ft
Heel Width	=	4.25
Total Footing Width	=	6.25
Footing Thickness	=	18.00 in
Key Width	=	12.00 in
Key Depth	=	18.00 in
Key Distance from Toe	=	2.00 ft

f'c = 3,000 psi Fy = 60,000 psi
Footing Concrete Density = 150.00 pcf
Min. As % = 0.0018
Cover @ Top = 2.00 in @ Btm.= 3.00 in

Surcharge Loads

Surcharge Over Heel	=	0.0 psf
Used To Resist Sliding & Overturning		
Surcharge Over Toe	=	0.0 psf
NOT Used for Sliding & Overturning		

Lateral Load Applied to Stem

Lateral Load	=	0.0 #/ft
...Height to Top	=	0.00 ft
...Height to Bottom	=	0.00 ft

Adjacent Footing Load

Adjacent Footing Load	=	0.0 lbs
Footing Width	=	0.00 ft
Eccentricity	=	0.00 in
Wall to Ftg CL Dist	=	0.00 ft
Footing Type		Line Load
Base Above/Below Soil at Back of Wall	=	0.0 ft
Poisson's Ratio	=	0.300

Axial Load Applied to Stem

Axial Dead Load	=	0.0 lbs
Axial Live Load	=	0.0 lbs
Axial Load Eccentricity	=	0.0 in

*Design Summary

Wall Stability Ratios

Overturning	=	2.58	OK
Sliding	=	1.59	OK
Total Bearing Load	=	8,261 lbs	
...resultant ecc.	=	7.92 in	
Soil Pressure @ Toe	=	2,160 psf	OK
Soil Pressure @ Heel	=	484 psf	OK
Allowable	=	4,000 psf	
Soil Pressure Less Than Allowable			
ACI Factored @ Toe	=	2,349 psf	
ACI Factored @ Heel	=	526 psf	
Footing Shear @ Toe	=	8.5 psi	OK
Footing Shear @ Heel	=	21.2 psi	OK
Allowable	=	82.2 psi	

Sliding Calcs (Vertical Component NOT Used)

Lateral Sliding Force	=	3,270.4 lbs	
less 100% Passive Force	= -	330.8 lbs	
less 100% Friction Force	= -	4,866.1 lbs	
Added Force Req'd	=	0.0 lbs	OK
....for 1.5 : 1 Stability	=	0.0 lbs	OK

Load Factors

Building Code	IBC 2003
Dead Load	1.200
Live Load	1.600
Earth, H	1.600
Wind, W	1.600
Seismic, E	1.000

Stem Construction

		Top Stem	2nd
Design Height Above Ftg	ft =	3.75	0.00
Wall Material Above "Ht"	=	Concrete	Concrete
Thickness	=	12.00	12.00
Rebar Size	=	# 5	# 7
Rebar Spacing	=	12.00	12.00
Rebar Placed at	=	Edge	Edge
Design Data			
fb/FB + fa/Fa	=	**0.259**	**0.565**
Total Force @ Section	lbs =	1,593.8	4,069.8
Moment....Actual	ft-# =	3,320.3	13,598.3
Moment.....Allowable	ft-# =	12,827.3	24,057.0
Shear.....Actual	psi =	14.0	35.7
Shear.....Allowable	psi =	82.2	82.2
Wall Weight	psf =	150.0	150.0
Rebar Depth 'd'	in =	9.50	9.50
LAP SPLICE IF ABOVE	in =	21.36	37.38
LAP SPLICE IF BELOW	in =	21.36	
HOOK EMBED INTO FTG	in =		13.42
Masonry Data			
f'm	psi =		
Fs	psi =		
Solid Grouting	=		
Special Inspection	=		
Modular Ratio 'n'	=		
Short Term Factor	=		
Equiv. Solid Thick.	=		
Masonry Block Type = Medium Weight			
Concrete Data			
f'c	psi =	3,000.0	3,000.0
Fy	psi =	60,000.0	60,000.0

Retain Pro 2005 , 7-April-2005, (c) 1989-2005
www.retainpro.com/support for latest release
Registration # : RP-1141385 2005001

Cantilevered Retaining Wall Design

Code: IBC 2003

Footing Design Results

		Toe	Heel
Factored Pressure	=	2,349	526 psf
Mu' : Upward	=	4,308	4,447 ft-#
Mu' : Downward	=	696	13,694 ft-#
Mu: Design	=	3,612	9,247 ft-#
Actual 1-Way Shear	=	8.46	21.17 psi
Allow 1-Way Shear	=	82.16	82.16 psi
Toe Reinforcing	=	# 5 @ 9.00 in	
Heel Reinforcing	=	# 5 @ 12.00 in	
Key Reinforcing	=	# 5 @ 18.00 in	

Other Acceptable Sizes & Spacings

Toe: Not req'd, Mu < S * Fr
Heel: #4@ 7.25 in, #5@ 11.25 in, #6@ 16.00 in, #7@ 21.75 in, #8@ 28.50 in, #9@ 36
Key:

Summary of Overturning & Resisting Forces & Moments

Item		.....OVERTURNING..... Force lbs	Distance ft	Moment ft-#		.....RESISTING..... Force lbs	Distance ft	Moment ft-#
Heel Active Pressure	=	3,372.4	3.83	12,927.4	Soil Over Heel	= 4,225.0	4.63	19,540.6
Toe Active Pressure	=	-102.0	0.67	-68.0	Sloped Soil Over Heel	=		
Surcharge Over Toe	=				Surcharge Over Heel	=		
Adjacent Footing Load	=				Adjacent Footing Load	=		
Added Lateral Load	=				Axial Dead Load on Stem	=	0.00	
Load @ Stem Above Soil	=				Soil Over Toe	= 130.0	1.00	130.0
					Surcharge Over Toe	=		
					Stem Weight(s)	= 1,500.0	2.50	3,750.0
					Earth @ Stem Transitions	=		
Total	=	3,270.4	**O.T.M.** =	12,859.4	Footing Weight	= 1,406.3	3.13	4,394.5
Resisting/Overturning Ratio			=	**2.58**	Key Weight	= 225.0	2.50	562.5
Vertical Loads used for Soil Pressure =		8,261.1 lbs			Vert. Component	= 774.8	6.25	4,842.6
					Total =	8,261.1 lbs	**R.M.=**	33,220.2

Vertical component of active pressure used for soil pressure

DESIGNER NOTES:

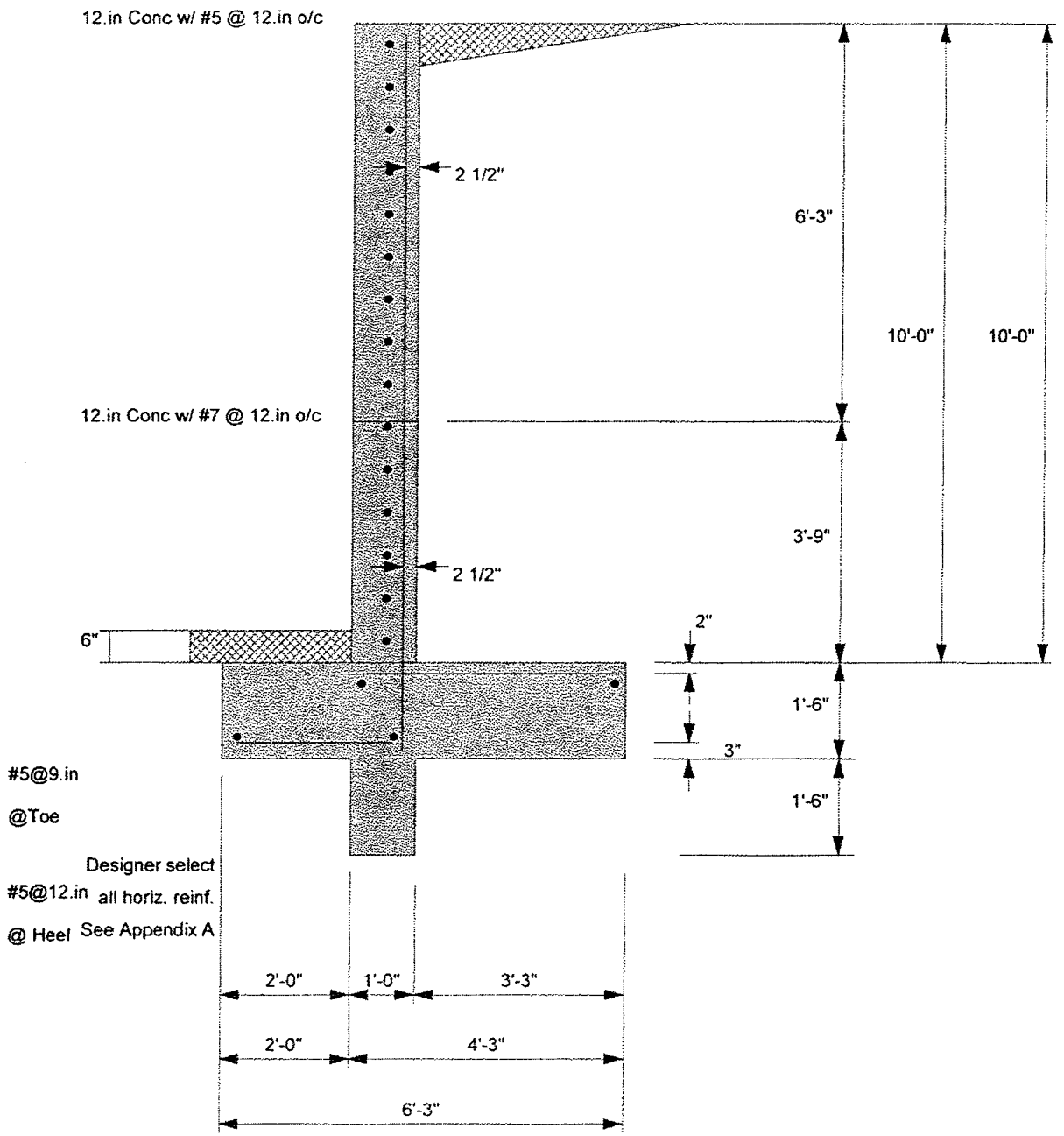
12.in Conc w/ #5 @ 12.in o/c
2 1/2"
6'-3"
10'-0"
10'-0"
12.in Conc w/ #7 @ 12.in o/c
3'-9"
2 1/2"
2"
6"
1'-6"
3"
1'-6"
#5@9.in
@Toe
Designer select
#5@12.in all horiz. reinf.
@ Heel See Appendix A
2'-0"
1'-0"
3'-3"
2'-0"
4'-3"
6'-3"

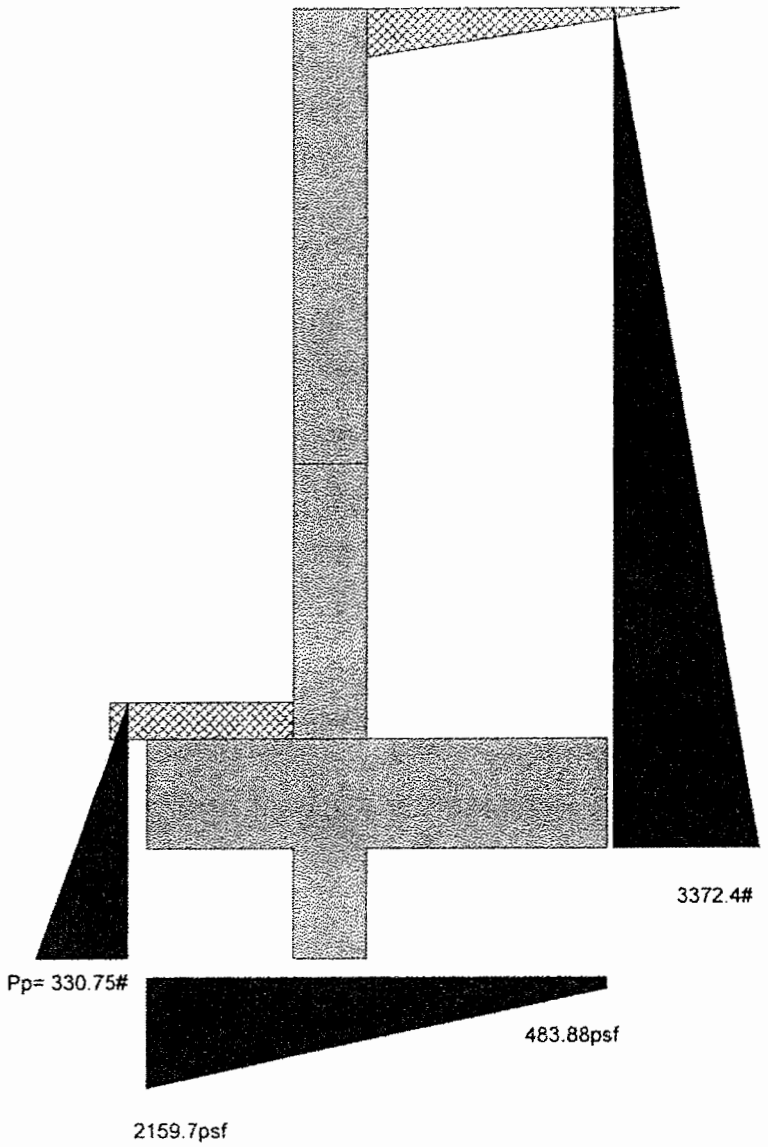
3372.4#
Pp= 330.75#
483.88psf
2159.7psf

TCPI
436 Creamery Way, Suite 100
Exton, Pa 19341
Los Alamos Retaining Wall No. 1

Title : Wall "B" H = 10 Seismic
Job # : E-05129 Dsgnr: JJF
Description....
Wall 'B' Height (H) =10'-0" Seismic EFP = 62 pcf

Page: _____
Date: MAY 24,2005

This Wall in File: C:\Program Files\RP2005\los alamos rw.r

Retain Pro 2005 , 7-April-2005, (c) 1989-2005
www.retainpro.com/support for latest release
Registration # : RP-1141385 2005001

Cantilevered Retaining Wall Design

Code: IBC 2003

Criteria

Retained Height	=	10.00 ft
Wall height above soil	=	0.00 ft
Slope Behind Wall	=	0.00 : 1
Height of Soil over Toe	=	6.00 in
Water height over heel	=	0.0 ft
Wind on Stem	=	0.0 psf

Soil Data

Allow Soil Bearing	=	5,000.0 psf
Equivalent Fluid Pressure Method		
Heel Active Pressure	=	62.0 psf/ft
Toe Active Pressure	=	62.0 psf/ft
Passive Pressure	=	54.0 psf/ft
Soil Density	=	130.00 pcf
Footing||Soil Friction	=	0.650
Soil height to ignore for passive pressure	=	0.00 in

Footing Dimensions & Strengths

Toe Width	=	2.00 ft
Heel Width	=	4.25
Total Footing Width	=	6.25
Footing Thickness	=	18.00 in
Key Width	=	12.00 in
Key Depth	=	18.00 in
Key Distance from Toe	=	2.00 ft

f'c = 3,000 psi Fy = 60,000 psi
Footing Concrete Density = 150.00 pcf
Min. As % = 0.0018
Cover @ Top = 2.00 in @ Btm.= 3.00 in

Surcharge Loads

Surcharge Over Heel	=	0.0 psf
Used To Resist Sliding & Overturning		
Surcharge Over Toe	=	0.0 psf
Used for Sliding & Overturning		

Lateral Load Applied to Stem

Lateral Load	=	0.0 #/ft
...Height to Top	=	0.00 ft
...Height to Bottom	=	0.00 ft

Adjacent Footing Load

Adjacent Footing Load	=	0.0 lbs
Footing Width	=	0.00 ft
Eccentricity	=	0.00 in
Wall to Ftg CL Dist	=	0.00 ft
Footing Type		
Base Above/Below Soil at Back of Wall	=	0.0 ft
Poisson's Ratio	=	0.300

Axial Load Applied to Stem

Axial Dead Load	=	0.0 lbs
Axial Live Load	=	0.0 lbs
Axial Load Eccentricity	=	0.0 in

*Design Summary

Wall Stability Ratios

Overturning	=	2.12 OK
Sliding	=	1.31 Ratio < 1.5!
Total Bearing Load	=	8,237 lbs
...resultant ecc.	=	12.10 in
Soil Pressure @ Toe	=	2,594 psf OK
Soil Pressure @ Heel	=	42 psf OK
Allowable	=	5,000 psf
Soil Pressure Less Than Allowable		
ACI Factored @ Toe	=	2,829 psf
ACI Factored @ Heel	=	46 psf
Footing Shear @ Toe	=	10.4 psi OK
Footing Shear @ Heel	=	25.0 psi OK
Allowable	=	82.2 psi

Sliding Calcs (Vertical Component NOT Used)

Lateral Sliding Force	=	3,975.8 lbs
less 100% Passive Force	= -	330.8 lbs
less 100% Friction Force	= -	4,866.1 lbs
Added Force Req'd	=	0.0 lbs OK
....for 1.5 : 1 Stability	=	766.8 lbs NG

Load Factors

Building Code	IBC 2003
Dead Load	1.200
Live Load	1.600
Earth, H	1.400
Wind, W	1.600
Seismic, E	1.000

Stem Construction

		Top Stem	2nd
Design Height Above Ftg	ft =	Stem OK 3.75	Stem OK 0.00
Wall Material Above "Ht"	=	Concrete	Concrete
Thickness	=	12.00	12.00
Rebar Size	=	# 5	# 7
Rebar Spacing	=	12.00	12.00
Rebar Placed at	=	Edge	Edge
Design Data			
fb/FB + fa/Fa	=	**0.275**	**0.601**
Total Force @ Section	lbs =	1,695.3	4,329.2
Moment....Actual	ft-# =	3,531.9	14,464.9
Moment.....Allowable	ft-# =	12,827.3	24,057.0
Shear.....Actual	psi =	14.9	38.0
Shear.....Allowable	psi =	82.2	82.2
Wall Weight	psf =	150.0	150.0
Rebar Depth 'd'	in =	9.50	9.50
LAP SPLICE IF ABOVE	in =	21.36	37.38
LAP SPLICE IF BELOW	in =	21.36	
HOOK EMBED INTO FTG	in =		13.42
Masonry Data			
f'm	psi =		
Fs	psi =		
Solid Grouting	=		
Special Inspection	=		
Modular Ratio 'n'	=		
Short Term Factor	=		
Equiv. Solid Thick.	=		
Masonry Block Type =			
Concrete Data			
f'c	psi =	3,000.0	3,000.0
Fy	psi =	60,000.0	60,000.0

Retain Pro 2005 , 7-April-2005, (c) 1989-2005
www.retainpro.com/support for latest release
Registration # : RP-1141385 2005001

Cantilevered Retaining Wall Design

Code: IBC 2003

Footing Design Results

		Toe	Heel	
Factored Pressure	=	2,829	46	psf
Mu' : Upward	=	5,064	2,790	ft-#
Mu' : Downward	=	696	13,567	ft-#
Mu: Design	=	4,368	10,776	ft-#
Actual 1-Way Shear	=	10.43	24.98	psi
Allow 1-Way Shear	=	82.16	82.16	psi

Toe Reinforcing = # 5 @ 9.00 in
Heel Reinforcing = # 5 @ 12.00 in
Key Reinforcing = # 5 @ 18.00 in

Other Acceptable Sizes & Spacings

Toe: Not req'd, Mu < S * Fr
Heel: #4@ 7.25 in, #5@ 11.25 in, #6@ 16.00 in, #7@ 21.75 in, #8@ 28.50 in, #9@ 36
Key:

Summary of Overturning & Resisting Forces & Moments

Item		.....OVERTURNING..... Force lbs	Distance ft	Moment ft-#
Heel Active Pressure	=	4,099.8	3.83	15,715.7
Toe Active Pressure	=	-124.0	0.67	-82.7
Surcharge Over Toe	=			
Adjacent Footing Load	=			
Added Lateral Load	=			
Load @ Stem Above Soil	=			
Total	=	3,975.8	**O.T.M.** =	15,633.0

Resisting/Overturning Ratio = **2.12**

Vertical Loads used for Soil Pressure = 8,236.6 lbs

Vertical component of active pressure used for soil pressure

		.....RESISTING..... Force lbs	Distance ft	Moment ft-#
Soil Over Heel	=	4,225.0	4.63	19,540.6
Sloped Soil Over Heel	=			
Surcharge Over Heel	=			
Adjacent Footing Load	=			
Axial Dead Load on Stem	=		0.00	
Soil Over Toe	=	130.0	1.00	130.0
Surcharge Over Toe	=			
Stem Weight(s)	=	1,500.0	2.50	3,750.0
Earth @ Stem Transitions	=			
Footing Weight	=	1,406.3	3.13	4,394.5
Key Weight	=	225.0	2.50	562.5
Vert. Component	=	750.4	6.25	4,689.9
	Total =	8,236.6 lbs	**R.M.=**	33,067.5

DESIGNER NOTES:

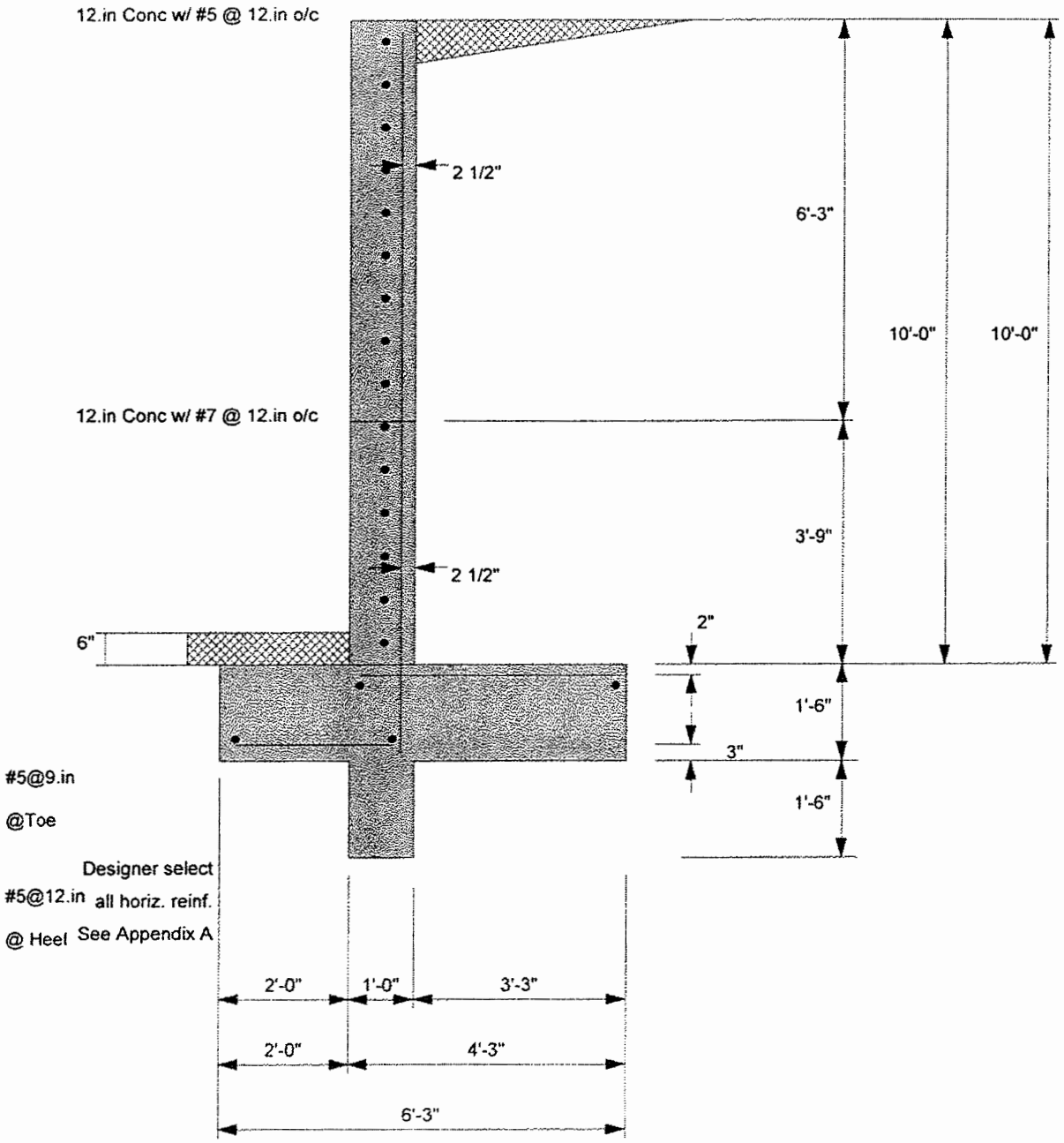
12.in Conc w/ #5 @ 12.in o/c
2 1/2"
6'-3"
10'-0"
10'-0"
12.in Conc w/ #7 @ 12.in o/c
3'-9"
2 1/2"
2"
6"
1'-6"
3"
1'-6"
#5@9.in
@Toe
Designer select
#5@12.in all horiz. reinf.
@ Heel See Appendix A
2'-0"
1'-0"
3'-3"
2'-0"
4'-3"
6'-3"

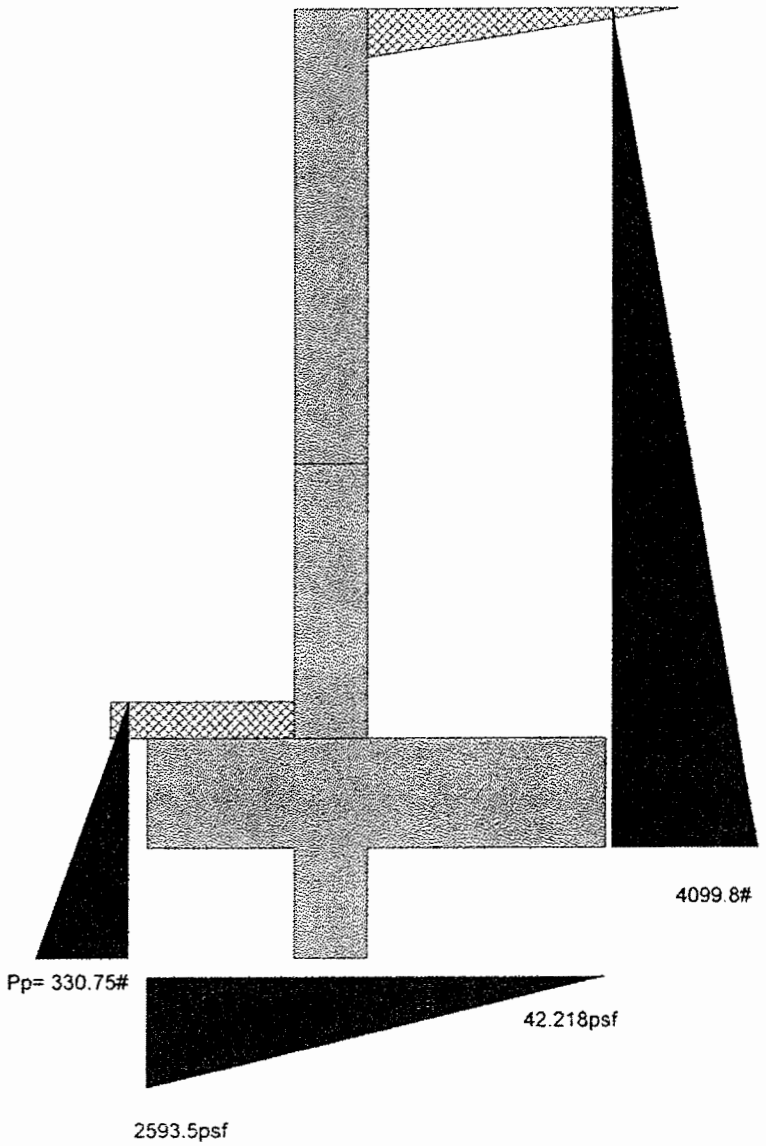
4099.8#
Pp= 330.75#
42.218psf
2593.5psf

TCPI
436 Creamery Way, Suite 100
Exton, Pa 19341
Los Alamos Retaining Wall No. 1

Title : Wall 'B' H= 10' Equipment Load Page: _____
Job # : E-05129 Dsgnr: JJF Date: MAY 25,2005
Description....
Wall 'B' Height (H) = 10'-0" Equipment Load with EFP =

This Wall in File: C:\Program Files\RP2005\los alamos rw.r

Retain Pro 2005 , 7-April-2005, (c) 1989-2005
www.retainpro.com/support for latest release
Registration # : RP-1141385 2005001

Cantilevered Retaining Wall Design

Code: IBC 2003

Criteria

Retained Height	=	10.00 ft
Wall height above soil	=	0.00 ft
Slope Behind Wall	=	0.00 : 1
Height of Soil over Toe	=	6.00 in
Water height over heel	=	0.0 ft
Wind on Stem	=	0.0 psf

Soil Data

Allow Soil Bearing	=	4,000.0 psf
Equivalent Fluid Pressure Method		
Heel Active Pressure	=	51.0 psf/ft
Toe Active Pressure	=	51.0 psf/ft
Passive Pressure	=	54.0 psf/ft
Soil Density	=	130.00 pcf
Footing||Soil Friction	=	0.650
Soil height to ignore for passive pressure	=	0.00 in

Footing Dimensions & Strengths

Toe Width	=	2.00 ft
Heel Width	=	4.25
Total Footing Width	=	6.25
Footing Thickness	=	18.00 in
Key Width	=	12.00 in
Key Depth	=	18.00 in
Key Distance from Toe	=	2.00 ft

f'c = 3,000 psi Fy = 60,000 psi
Footing Concrete Density = 150.00 pcf
Min. As % = 0.0018
Cover @ Top = 2.00 in @ Btm.= 3.00 in

Surcharge Loads

Surcharge Over Heel	=	0.0 psf

Used To Resist Sliding & Overturning

Surcharge Over Toe	=	0.0 psf

NOT Used for Sliding & Overturning

Lateral Load Applied to Stem

Lateral Load	=	0.0 #/ft
...Height to Top	=	0.00 ft
...Height to Bottom	=	0.00 ft

Adjacent Footing Load

Adjacent Footing Load	=	2,000.0 lbs
Footing Width	=	8.00 ft
Eccentricity	=	0.00 in
Wall to Ftg CL Dist	=	6.00 ft
Footing Type		
Base Above/Below Soil at Back of Wall	=	0.0 ft
Poisson's Ratio	=	0.300

Axial Load Applied to Stem

Axial Dead Load	=	0.0 lbs
Axial Live Load	=	0.0 lbs
Axial Load Eccentricity	=	0.0 in

*Design Summary

Wall Stability Ratios

Overturning	=	2.04 OK
Sliding	=	1.32 Ratio < 1.5!
Total Bearing Load	=	8,643 lbs
...resultant ecc.	=	12.69 in
Soil Pressure @ Toe	=	2,787 psf OK
Soil Pressure @ Heel	=	0 psf OK
Allowable	=	4,000 psf

Soil Pressure Less Than Allowable

ACI Factored @ Toe	=	3,094 psf
ACI Factored @ Heel	=	0 psf
Footing Shear @ Toe	=	11.5 psi OK
Footing Shear @ Heel	=	24.9 psi OK
Allowable	=	82.2 psi

Sliding Calcs (Vertical Component NOT Used)

Lateral Sliding Force	=	4,110.0 lbs
less 100% Passive Force	=	- 330.8 lbs
less 100% Friction Force	=	- 5,114.6 lbs
Added Force Req'd	=	0.0 lbs OK
....for 1.5 : 1 Stability	=	719.7 lbs NG

Load Factors

Building Code	IBC 2003
Dead Load	1.200
Live Load	1.600
Earth, H	1.600
Wind, W	1.600
Seismic, E	1.000

Stem Construction

		Top Stem	2nd
		Stem OK	Stem OK
Design Height Above Ftg	ft =	3.75	0.00
Wall Material Above "Ht"	=	Concrete	Concrete
Thickness	=	12.00	12.00
Rebar Size	=	# 5	# 7
Rebar Spacing	=	12.00	12.00
Rebar Placed at	=	Edge	Edge
Design Data			
fb/FB + fa/Fa	=	**0.366**	**0.770**
Total Force @ Section	lbs =	2,256.3	5,260.5
Moment....Actual	ft-# =	4,695.3	18,512.2
Moment.....Allowable	ft-# =	12,827.3	24,057.0
Shear.....Actual	psi =	19.8	46.1
Shear.....Allowable	psi =	82.2	82.2
Wall Weight	psf =	150.0	150.0
Rebar Depth 'd'	in =	9.50	9.50
LAP SPLICE IF ABOVE	in =	21.36	37.38
LAP SPLICE IF BELOW	in =	21.36	
HOOK EMBED INTO FTG	in =		13.42
Masonry Data			
f'm	psi =		
Fs	psi =		
Solid Grouting	=		
Special Inspection	=		
Modular Ratio 'n'	=		
Short Term Factor	=		
Equiv. Solid Thick.	=		
Masonry Block Type =			
Concrete Data			
f'c	psi =	3,000.0	3,000.0
Fy	psi =	60,000.0	60,000.0

TCPI
436 Creamery Way, Suite 100
Exton, Pa 19341
Los Alamos Retaining Wall No. 1

Title : Wall 'B' H= 10' Equipment Load Page: _____
Job # : E-05129 Dsgnr: JJF Date: MAY 25,2005
Description....
Wall 'B' Height (H) = 10'-0" Equipment Load with EFP =

This Wall in File: C:\Program Files\RP2005\los alamos rw.rp

Retain Pro 2005 , 7-April-2005, (c) 1989-2005
www.retainpro.com/support for latest release
Registration # : RP-1141385 2005001

Cantilevered Retaining Wall Design

Code: IBC 2003

Footing Design Results

		Toe	Heel
Factored Pressure	=	3,094	0 psf
Mu' : Upward	=	5,524	2,729 ft-#
Mu' : Downward	=	696	13,694 ft-#
Mu: Design	=	4,828	10,964 ft-#
Actual 1-Way Shear	=	11.48	24.89 psi
Allow 1-Way Shear	=	82.16	82.16 psi
Toe Reinforcing	=	# 7 @ 12.00 in	
Heel Reinforcing	=	# 5 @ 12.00 in	
Key Reinforcing	=	# 5 @ 18.00 in	

Other Acceptable Sizes & Spacings

Toe: Not req'd, Mu < S * Fr
Heel: #4@ 7.25 in, #5@ 11.25 in, #6@ 16.00 in, #7@ 21.75 in, #8@ 28.50 in, #9@ 36
Key:

Summary of Overturning & Resisting Forces & Moments

Item		.....OVERTURNING..... Force lbs	Distance ft	Moment ft-#
Heel Active Pressure	=	3,372.4	3.83	12,927.4
Toe Active Pressure	=	-102.0	0.67	-68.0
Surcharge Over Toe	=			
Adjacent Footing Load	=	839.6	5.08	4,261.4
Added Lateral Load	=			
Load @ Stem Above Soil	=			
Total	=	4,110.0	**O.T.M.** =	17,120.8

Resisting/Overturning Ratio = **2.04**

Vertical Loads used for Soil Pressure = 8,643.4 lbs

Vertical component of active pressure used for soil pressure

		.....RESISTING..... Force lbs	Distance ft	Moment ft-#
Soil Over Heel	=	4,225.0	4.63	19,540.6
Sloped Soil Over Heel	=			
Surcharge Over Heel	=			
Adjacent Footing Load	=	382.4	4.63	1,768.4
Axial Dead Load on Stem	=		0.00	
Soil Over Toe	=	130.0	1.00	130.0
Surcharge Over Toe	=			
Stem Weight(s)	=	1,500.0	2.50	3,750.0
Earth @ Stem Transitions	=			
Footing Weight	=	1,406.3	3.13	4,394.5
Key Weight	=	225.0	2.50	562.5
Vert. Component	=	774.8	6.25	4,842.6
Total	=	8,643.4 lbs	**R.M.=**	34,988.6

DESIGNER NOTES:

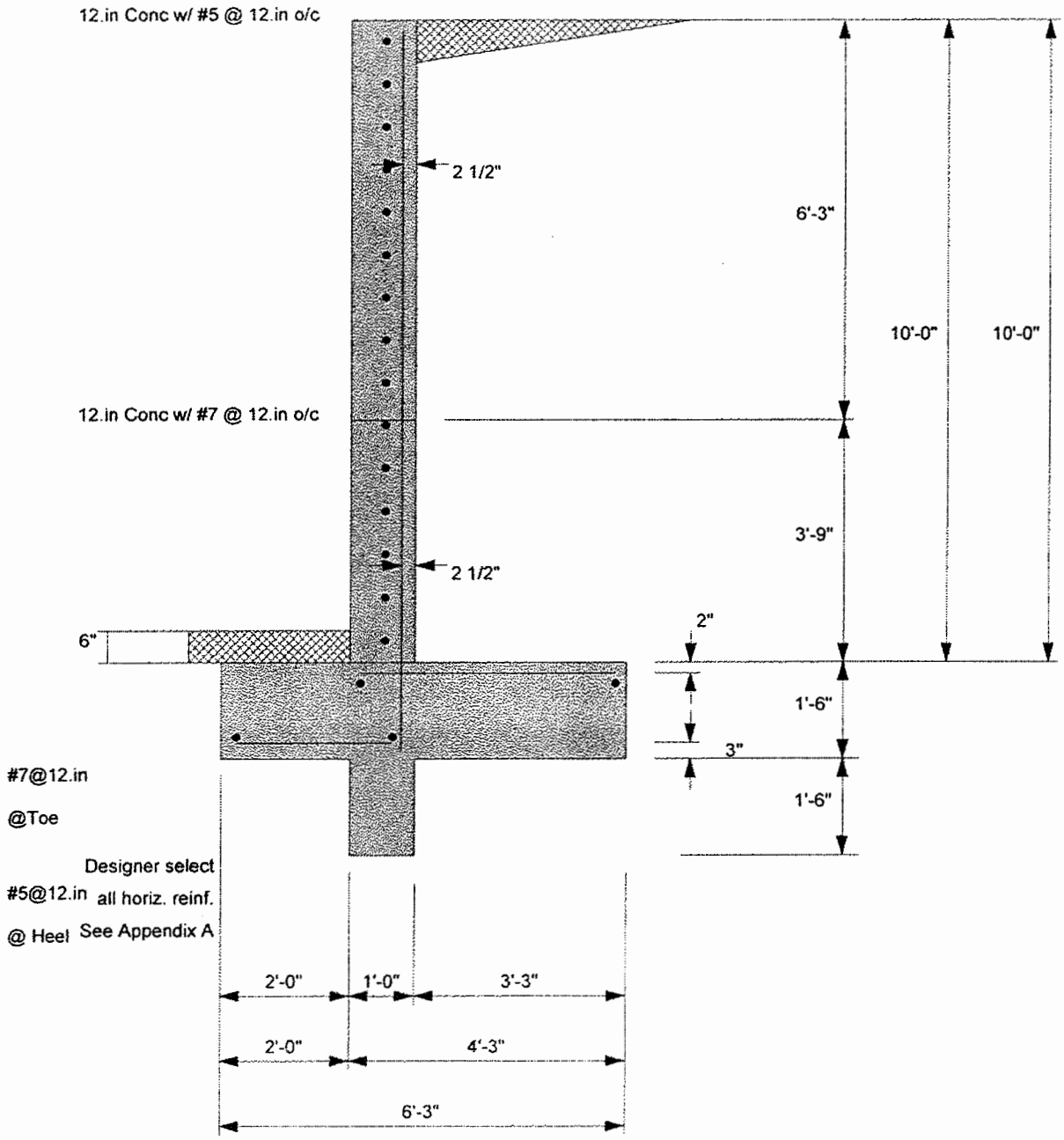
12.in Conc w/ #5 @ 12.in o/c
2 1/2"
6'-3"
10'-0"
10'-0"
12.in Conc w/ #7 @ 12.in o/c
3'-9"
2 1/2"
2"
6"
1'-6"
3"
1'-6"
#7@12.in
@Toe
Designer select
#5@12.in all horiz. reinf.
@ Heel See Appendix A
2'-0"
1'-0"
3'-3"
2'-0"
4'-3"
6'-3"

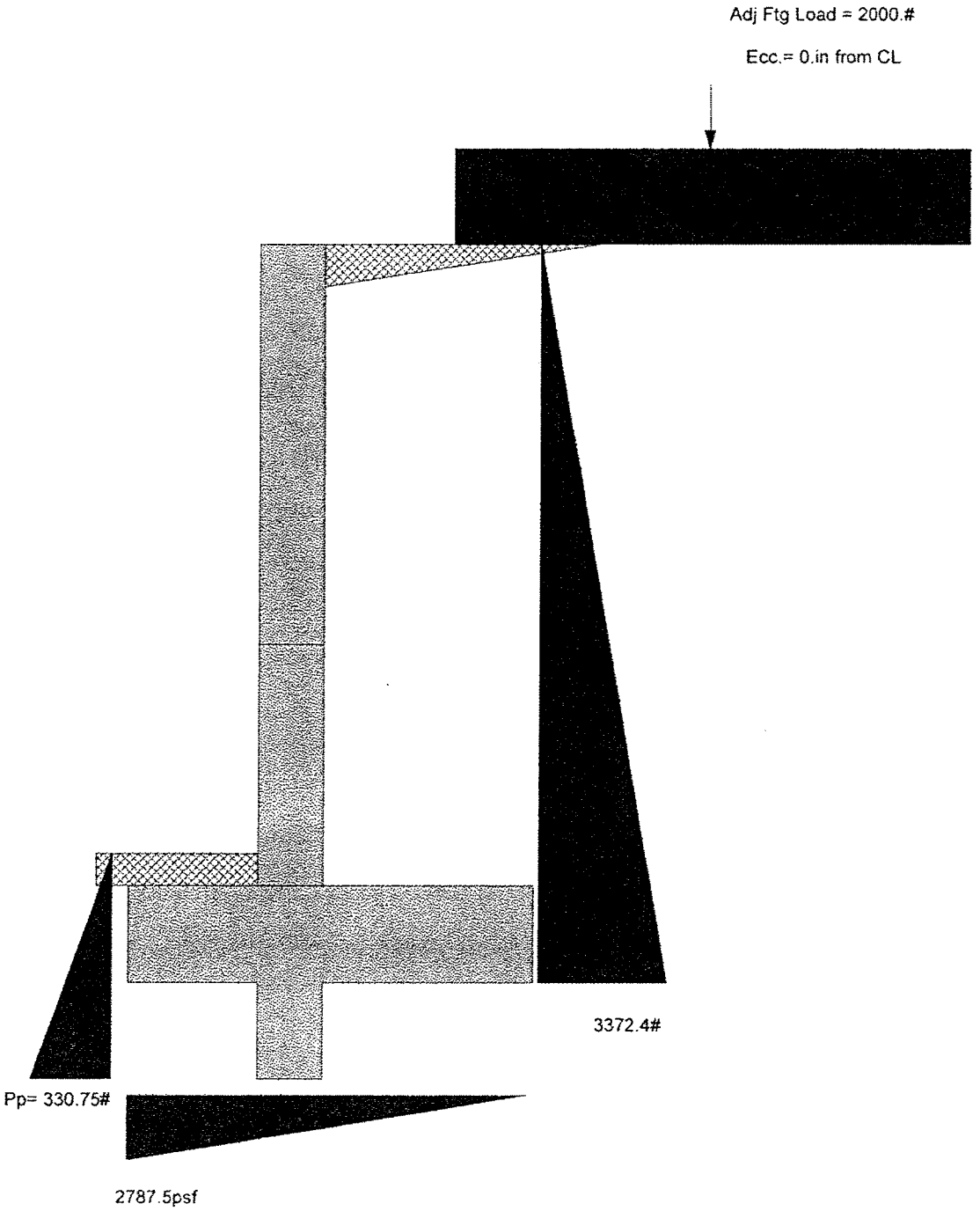
Adj Ftg Load = 2000.#
Ecc.= 0.in from CL
3372.4#
Pp= 330.75#
2787.5psf

WALL Mark 'B' Seismic Loads

Definitions:

B = Width of Toe (feet)
C = Width of Heel (feet)
W = Width of Base (feet)
γ = density of backfill (pcf)
$\gamma_{concrete}$ density = 150 pcf
EFP_{static} = Design equivalent fluid pressure (pcf), static condition.
EFP_{AE} = Design equivalent fluid pressure (pcf), Active Earth pressure under seismic conditions..
ϕ = Internial angle of friction of the soil.
δ = Friction angle of soil to concrete wall.
K_h = Alternate seismic force developed from the Geotechnical Calculations page 12 in Appendix 'B'

h wall = Height of Wall over base (feet)
t_{base} = thickness of Base (feet)
t_{stem} = Thickness of Stem (feet)

Wall Mk. 'B' Data:

$B := 2.0$ (feet) $h_{wall} := 10.0$ (feet) $t_{stem} := 1.00$ (feet)

$C := 3.25$ (feet) $W := 6.25$ (feet) $t_{base} := 1.50$ (feet)

Soil Data: $\gamma := 130$ (pcf) $\delta := 22 \cdot deg$ $\phi := 32 \cdot deg$

$EFP_{static} := 46$ (pcf)

$EFP_{AE} := 62$ (pcf)

$K_h := 0.09$

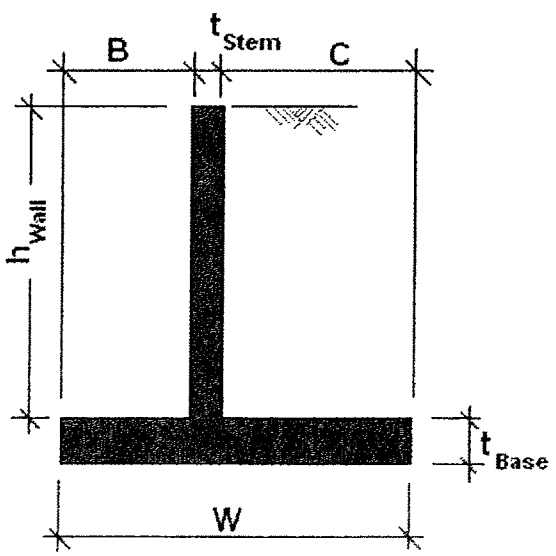

WALL STABILITY ANALYSIS

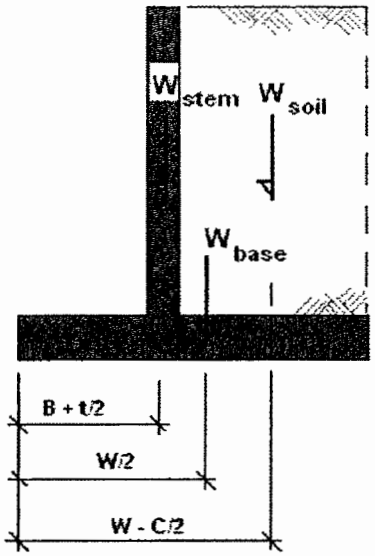

Stabilizing Forces

Weights: (kips.per foot)

$W_{stem} := (0.150) \cdot h_{wall} \cdot t_{stem}$ $W_{stem} = 1.500$

$W_{base} := (0.150) \cdot W \cdot t_{base}$ $W_{base} = 1.406$

$W_{soil} := \frac{\gamma \cdot h_{wall} \cdot C}{1000}$ $W_{soil} = 4.225$

$H := h_{wall} + t_{base}$ $H = 11.5$ (feet)

Driving Forces:

$P_{ST} := \frac{(EFP_{static}) \cdot \frac{1}{2} \cdot (H)^2}{1000}$ $P_{ST} = 3.042$ (kips)

$P_{SE} := \frac{(EFP_{AE}) \cdot \frac{1}{2} \cdot (H)^2}{1000}$ $P_{SE} = 4.1$ (kips)

$\Delta P_1 := P_{SE} - P_{ST}$ $\Delta P_1 = 1.058$ (kips)

$\Delta P_2 := \frac{K_h \cdot \gamma \cdot (H)^2}{1000}$ $\Delta P_2 = 1.547$ (kips)

The larger value of either ΔP_1 or ΔP_2 is to be used in the seismic analysis

Let: $\Delta := \begin{pmatrix} \Delta P_1 \\ \Delta P_2 \end{pmatrix}$ $\Delta P := \max(\Delta)$ $\Delta P = 1.547$ (kips)

Driving Forces and Moments about the Toe:

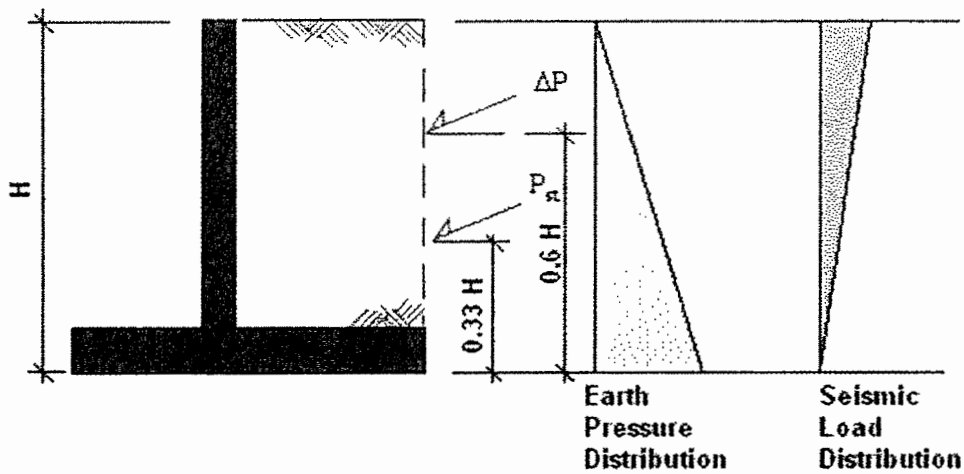

Horizontal Driving Force (**HDF**) is the sum of P_{st} and ΔP in the horizontal direction:

$HDF := (P_{ST} + \Delta P)\cdot\cos(\delta)$ $\quad HDF = 4.255$ (kips)

Driving Moment ($\mathbf{M_d}$) is the sum of the driving moments about the Toe.

$M_d := (P_{ST}\cdot 0.333\cdot H)\cdot\cos(\delta) + (\Delta P\cdot 0.6\cdot H)\cdot\cos(\delta)$ $\quad M_d = 20.699$ (ft-kips)

Resisting Forces and Moments about the Toe:

Resisting Forces (**RF**) neglecting passive pressure, a conservative analysis:

$RF := \tan(\phi)(W_{stem} + W_{base} + W_{soil} + P_{ST}\cdot\sin(\delta) + \Delta P\cdot\sin(\delta))$

$RF = 5.53$ (kips)

"Factor of Safety" against sliding is the ratio of **RF** to **HDF**

$Ratio_{sliding} := \frac{RF}{HDF}$ $\quad Ratio_{sliding} = 1.3$

Resisting Moments about the Toe M_r:

$$M_r := W_{stem}\cdot(B + t_{stem}) + W_{base}\cdot\left(\frac{W}{2}\right) + W_{soil}\cdot\left(W - \frac{C}{2}\right) + (P_{ST} + \Delta P)\cdot W\cdot\sin(\delta)$$

$M_r = 39.18$ (ft-kips)

"Factor of Safety" against overturning the ratio of $\mathbf{M_r}$ to $\mathbf{M_d}$

$$Ratio_{OT} := \frac{M_r}{M_d} \qquad Ratio_{OT} = 1.893$$

Calculate Soil Bearing Pressurs:

Net Moment: $\Delta M := M_r - M_d$ $\Delta M = 18.48$ (ft-kips)

$$X := \frac{\Delta M}{\left(W_{stem} + W_{base} + W_{soil} + P_{ST}\cdot\sin(\delta) + \Delta P\cdot\sin(\delta)\right)} \qquad X = 2.088 \quad \text{(feet)}$$

$$R := \left(W_{stem} + W_{base} + W_{soil} + P_{ST}\cdot\sin(\delta) + \Delta P\cdot\sin(\delta)\right) \qquad R = 8.85 \quad \text{(kips)}$$

Eccentricity (e): $e := \frac{W}{2} - X$ $e = 1.037$ (feet) $\frac{W}{6} = 1.042$ (feet)

$$\text{Eccentricity} := \begin{cases} \text{"OK Within Middle Third"} & \text{if } e \le \frac{W}{6} \\ \text{"Non in Middle one-third"} & \text{otherwise} \end{cases}$$

Eccentricity = "OK Within Middle Third"

$$SP_2 := \frac{R}{W}\cdot\left(1 + \frac{e}{W}\right) \qquad SP_2 = 1.651$$ Maximum Soil Pearing Pressure (kips/ft^2)

$$SP_1 := \frac{R}{W}\cdot\left(1 - \frac{e}{W}\right) \qquad SP_1 = 1.181$$ Minimum Soil Pearing Pressure (kips/ft^2)

Concrete Design:

The design on the concrete elements will be in accordance with ACI 318-02.

See Section 9.2 of ACI 319-02

$U_{DL} := 1.2 \qquad U_H := 1.6 \qquad U_E := 1.0$

$$R_{ult} := \left(U_{DL}\cdot W_{stem} + U_{DL}\cdot W_{base} + U_E\cdot W_{soil} + U_E\cdot P_{ST}\cdot \sin(\delta) + U_E\cdot \Delta P\cdot \sin(\delta)\right)$$

$$M_{d_ult} := U_E\cdot\left[\left(P_{ST}\cdot 0.333\cdot H\right)\cdot\cos(\delta) + \left(\Delta P\cdot 0.6\cdot H\right)\cdot\cos(\delta)\right]$$

$$M_{r_ult_1} := U_{DL}\cdot W_{stem}\cdot\left(B + t_{stem}\right) + U_{DL}\cdot W_{base}\cdot\left(\frac{W}{2}\right) + U_{DL}\cdot W_{soil}\cdot\left(W - \frac{C}{2}\right)$$

$$M_{r_ult_2} := U_{DL}\cdot\left[\left(P_{ST} + \Delta P\right)\cdot W\cdot\sin(\delta)\right]$$

$$M_{r_ult} := M_{r_ult_1} + M_{r_ult_2}$$

Net Ultimate Moment: $\Delta M_{ult} := M_{r_ult} - M_{d_ult} \qquad \Delta M_{ult} = 26.316$ (ft-kips)

$X_{ult} := \dfrac{\Delta M_{ult}}{\left(R_{ult}\right)} \qquad X_{ult} = 2.79$ (feet)

$R_{ult} = 9.432$ (kips)

Eccentricity (e): $e_{ult} := \dfrac{W}{2} - X_{ult} \qquad e_{ult} = 0.335$ (feet) $\qquad \dfrac{W}{6} = 1.042$ (feet)

$$\text{Eccentricity} := \begin{cases} \text{"OK Within Middle Third"} & \text{if } e_{ult} \le \dfrac{W}{6} \\ \text{"Non in Middle one-third"} & \text{otherwise} \end{cases}$$

Eccentricity = "OK Within Middle Third"

$SP_{2_ult} := \dfrac{R_{ult}}{W}\cdot\left(1 + \dfrac{e_{ult}}{W}\right) \qquad SP_{2_ult} = 1.59$ Maximum Soil Pearing Pressure (kips/ft^2)

$SP_{1_ult} := \frac{R_{ult}}{W} \cdot \left(1 - \frac{e_{ult}}{W}\right)$ $SP_{1_ult} = 1.428$ Minimum Soil Pearing Pressure (kips/ft²)

$\Delta SP_{ult} := SP_{2_ult} - SP_{1_ult}$ $\Delta SP_{ult} = 0.162$ (kips/ft²)

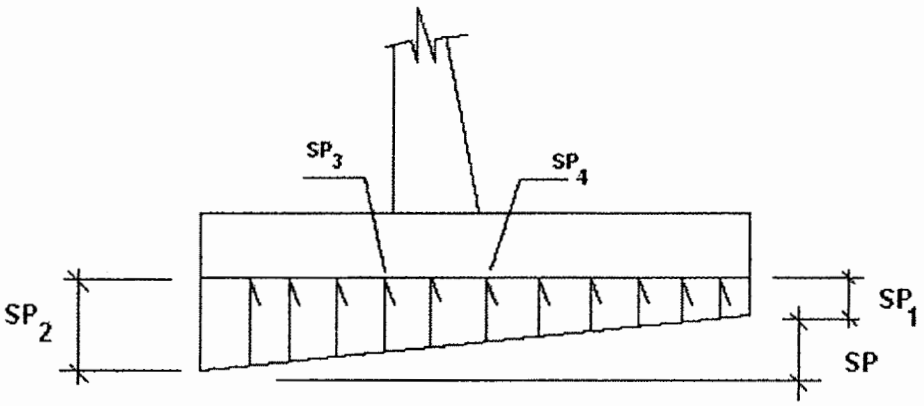

Pressure Diagram - Toe & Heel

Soil Pressure at Front Face of Stem:

$SP_{3_ult} := SP_{2_ult} - \frac{\Delta SP_{ult}}{W} \cdot (B)$ $SP_{3_ult} = 1.538$ (ksf)

Soil Pressure at Rear Face of Stem:

$SP_{4_ult} := SP_{2_ult} - \frac{\Delta SP_{ult}}{W} \cdot (B + t_{stem})$ $SP_{4_ult} = 1.512$ (ksf)

Moment at Front Face of Stem:

$$M_{toe} := SP_{3_ult} \cdot \frac{B^2}{2} + (SP_{2_ult} - SP_{3_ult}) \cdot \frac{(B)}{2} \cdot \left(\frac{2}{3}\right) \cdot B - U_{DL} \cdot (0.150) \cdot t_{base} \cdot \left(\frac{B^2}{2}\right)$$

$M_{toe} = 2.605$ (ft-kips)

Concrete Data:

$f'_c := 3$ ksi $\quad f_y := 60$ ksi $\quad M_u := M_{toe}$ ft-kips

$b := 12$ inches $\quad d := (12)\cdot t_{base} - 4 \quad d = 14$ inches $\quad \phi_f := 0.90$

A_s calculation is from CRSI Handbook

$$A_{s_required} := \frac{1.7\cdot f'_c\cdot b\cdot d}{2\cdot f_y} - \frac{1}{2}\cdot\sqrt{\frac{2.89\cdot(f'_c\cdot b\cdot d)^2}{(f_y)^2} - \frac{6.8\cdot f'_c\cdot b\cdot M_u\cdot 12}{\phi_f\cdot(f_y)^2}}$$

$A_{s_required} = 0.041$ Inches^2 $\quad \rho := \frac{A_{s_required}}{12\cdot d} \quad \rho = 0.0002$

Shear in Toe:

Soil Pressure at d from front face:

$$SP_{31_ult} := SP_{2_ult} - \frac{\Delta SP_{ult}}{W}\cdot\left(B - \frac{d}{12}\right) \quad SP_{31_ult} = 1.568 \quad \text{(ksf)}$$

$$V_{toe} := SP_{31_ult}\cdot\left(B - \frac{d}{12}\right) + \left(SP_{2_ult} - SP_{31_ult}\right)\cdot\left(\frac{1}{2}\right)\cdot\left(B - \frac{d}{12}\right)$$

$V_{toe} = 1.316$ (kips/foot)

$$\phi V_n := \frac{0.75\cdot 12\cdot d\cdot(2)\cdot\sqrt{f'_c\cdot 1000}}{1000} \quad \phi V_n = 13.803 \quad \text{(kips/foot)}$$

Moment at Rear Face of Stem in the Heel:

$$M_{heel} := SP_{1_ult}\cdot\frac{C^2}{2} + \left(SP_{4_ult} - SP_{1_ult}\right)\cdot\frac{(C)}{2}\cdot\left(\frac{1}{3}\right)\cdot C - U_{DL}\cdot(0.150)\cdot t_{base}\cdot\left(\frac{C^2}{2}\right)$$

$M_{heel} = 6.265$ (ft-kips) $\quad$ Let: $\quad M_u := M_{heel}$

A_s calculation is from CRSI Handbook

$$A_{s_required} := \frac{1.7 \cdot f'_c \cdot b \cdot d}{2 \cdot f_y} - \frac{1}{2} \cdot \sqrt{\frac{2.89 \cdot (f'_c \cdot b \cdot d)^2}{(f_y)^2} - \frac{6.8 \cdot f'_c \cdot b \cdot M_u \cdot 12}{\phi f \cdot (f_y)^2}}$$

$A_{s_required} = 0.1$ Inches^2 $\rho := \frac{A_{s_required}}{12 \cdot d}$ $\rho = 0.0006$

Shear in Hell:

Soil Pressure at d from front rear face of stem:

$$SP_{41_ult} := SP_{1_ult} + \frac{\Delta SP_{ult}}{W} \cdot \left(C - \frac{d}{12}\right) \quad SP_{41_ult} = 1.482 \quad \text{(ksf)}$$

$$V_{heel} := SP_{1_ult} \cdot \left(C - \frac{d}{12}\right) + \left(SP_{41_ult} - SP_{1_ult}\right) \cdot \left(\frac{1}{2}\right) \cdot \left(C - \frac{d}{12}\right)$$

$V_{heel} = 3.032$ (kips/foot)

$$\phi V_n := \frac{0.75 \cdot 12 \cdot d \cdot (2) \cdot \sqrt{f'_c \cdot 1000}}{1000} \quad \phi V_n = 13.803 \quad \text{(kips/foot)}$$

Moments in Stem:

Driving Forces:

$$P_{ST} := \frac{(EFP_{static}) \cdot \frac{1}{2} \cdot (h_{wall})^2}{1000} \quad P_{ST} = 2.3 \quad \text{(kips)}$$

$$P_{SE} := \frac{(EFP_{AE}) \cdot \frac{1}{2} \cdot (h_{wall})^2}{1000} \quad P_{SE} = 3.1 \quad \text{(kips)}$$

$\Delta P_1 := P_{SE} - P_{ST}$ $\Delta P_1 = 0.8$ (kips)

$$\Delta P_2 := \frac{K_h \cdot \gamma \cdot (h_{wall})^2}{1000} \qquad \Delta P_2 = 1.17 \qquad \text{(kips)}$$

The larger value of either ΔP_1 or ΔP_2 is to be used in the seismic analysis

Let: $\Delta := \begin{pmatrix} \Delta P_1 \\ \Delta P_2 \end{pmatrix}$ $\quad \Delta P := \max(\Delta) \quad \Delta P = 1.17 \quad$ (kips)

$$M_{stem} := U_E \cdot \left[\left(P_{ST} \cdot \cos(\delta) \cdot 0.333 h_{wall} \right) + \left(\Delta P \cdot 0.600 \cdot h_{wall} \right) \right]$$

$M_{stem} = 14.121$ (ft-kips) Let: $M_u := M_{stem}$ $\quad d := 12 t_{stem} - 3.0$

$d = 9$ (inches)

A_s calculation is from CRSI Handbook

$$A_{s_required} := \frac{1.7 \cdot f'_c \cdot b \cdot d}{2 \cdot f_y} - \frac{1}{2} \cdot \sqrt{\frac{2.89 \cdot (f'_c \cdot b \cdot d)^2}{(f_y)^2} - \frac{6.8 \cdot f'_c \cdot b \cdot M_u \cdot 12}{\phi f \cdot (f_y)^2}}$$

$A_{s_required} = 0.363$ Inches^2 $\quad \rho := \frac{A_{s_required}}{12 \cdot d} \quad \rho = 0.0034$

WALL MK. 'C'

Loading Case	Overturning Ratio	Sliding Ratio	Maximum Soil Bearing Pressure	Controlling Case for Strength Design	Remarks
Normal	2.60	1.49	2920		
Seismic 1	2.13	1.22	3532		
Compaction Equipment	2.03	1.46	3640	+	
Seismic 2	1.92	1.29	2335		

TCPI
436 Creamery Way, Suite 100
Exton, Pa 19341
Los Alamos Retaining Wall No. 1

Title : Wall 'C' H=15' Normal
Job # : E-05129 Dsgnr: JJF
Description....
Wall 'C" Height 'H' = 15'-0" Normal Loads EFP = 51 pcf

Page: _____
Date: MAY 24,2005

This Wall in File: C:\Program Files\RP2005\los alamos rw.r

Retain Pro 2005 , 7-April-2005, (c) 1989-2005
www.retainpro.com/support for latest release
Registration # : RP-1141385 2005001

Cantilevered Retaining Wall Design

Code: IBC 2003

Criteria

Retained Height	=	15.00 ft
Wall height above soil	=	0.00 ft
Slope Behind Wall	=	0.00 : 1
Height of Soil over Toe	=	6.00 in
Water height over heei	=	0.0 ft
Wind on Stem	=	0.0 psf

Soil Data

Allow Soil Bearing	=	4,000.0 psf
Equivalent Fluid Pressure Method		
Heel Active Pressure	=	51.0 psf/ft
Toe Active Pressure	=	51.0 psf/ft
Passive Pressure	=	54.0 psf/ft
Soil Density	=	130.00 pcf
Footing||Soil Friction	=	0.650
Soil height to ignore for passive pressure	=	0.00 in

Footing Dimensions & Strengths

Toe Width	=	3.00 ft
Heel Width	=	6.25
Total Footing Width	=	9.25
Footing Thickness	=	21.00 in
Key Width	=	15.00 in
Key Depth	=	18.00 in
Key Distance from Toe	=	3.00 ft

f'c = 3,000 psi Fy = 60,000 psi
Footing Concrete Density = 150.00 pcf
Min. As % = 0.0018
Cover @ Top = 2.00 in @ Btm.= 3.00 in

Surcharge Loads

Surcharge Over Heel	=	0.0 psf
Used To Resist Sliding & Overturning		
Surcharge Over Toe	=	0.0 psf
Used for Sliding & Overturning		

Lateral Load Applied to Stem

Lateral Load	=	0.0 #/ft
...Height to Top	=	0.00 ft
...Height to Bottom	=	0.00 ft

Adjacent Footing Load

Adjacent Footing Load	=	0.0 lbs
Footing Width	=	0.00 ft
Eccentricity	=	0.00 in
Wall to Ftg CL Dist	=	0.00 ft
Footing Type		
Base Above/Below Soil at Back of Wall	=	0.0 ft
Poisson's Ratio	=	0.300

Axial Load Applied to Stem

Axial Dead Load	=	0.0 lbs
Axial Live Load	=	0.0 lbs
Axial Load Eccentricity	=	0.0 in

*Design Summary

Wall Stability Ratios

Overturning	=	2.60 OK
Sliding	=	1.49 Ratio < 1.5!
Total Bearing Load	=	17,111 lbs
...resultant ecc.	=	10.68 in
Soil Pressure @ Toe	=	2,918 psf OK
Soil Pressure @ Heel	=	782 psf OK
Allowable	=	4,000 psf
Soil Pressure Less Than Allowable		
ACI Factored @ Toe	=	3,165 psf
ACI Factored @ Heel	=	848 psf
Footing Shear @ Toe	=	18.7 psi OK
Footing Shear @ Heel	=	38.4 psi OK
Allowable	=	82.2 psi

Sliding Calcs (Vertical Component NOT Used)

Lateral Sliding Force	=	7,025.3 lbs
less 100% Passive Force	= -	379.7 lbs
less 100% Friction Force	= -	10,053.5 lbs
Added Force Req'd	=	0.0 lbs OK
....for 1.5 : 1 Stability	=	104.7 lbs NG

Load Factors

Building Code	IBC 2003
Dead Load	1.200
Live Load	1.600
Earth, H	1.600
Wind, W	1.600
Seismic, E	1.000

Stem Construction

		Top Stem	2nd	3rd
		Stem OK	Stem OK	Stem OK
Design Height Above Ftg	ft =	10.00	3.75	0.00
Wall Material Above "Ht"	=	Concrete	Concrete	Concrete
Thickness	=	15.00	15.00	15.00
Rebar Size	=	# 7	# 7	# 9
Rebar Spacing	=	18.00	9.00	9.00
Rebar Placed at	=	Edge	Edge	Edge
Design Data				
fb/FB + fa/Fa	=	**0.081**	**0.480**	**0.716**
Total Force @ Section	lbs =	1,020.0	5,163.8	9,169.8
Moment....Actual	ft-# =	1,700.0	19,364.1	45,898.3
Moment.....Allowable	ft-# =	20,892.0	40,368.0	64,133.3
Shear.....Actual	psi =	7.1	35.9	63.7
Shear.....Allowable	psi =	82.2	82.2	82.2
Wall Weight	psf =	187.5	187.5	187.5
Rebar Depth 'd'	in =	12.00	12.00	12.00
LAP SPLICE IF ABOVE	in =	37.38	37.38	48.06
LAP SPLICE IF BELOW	in =	37.38	37.38	
HOOK EMBED INTO FTG	in =			17.25
Masonry Data				
f'm	psi =			
Fs	psi =			
Solid Grouting	=			
Special Inspection	=			
Modular Ratio 'n'	=			
Short Term Factor	=			
Equiv. Solid Thick.	=			
Masonry Block Type =				
Concrete Data				
f'c	psi =	3,000.0	3,000.0	3,000.0
Fy	psi =	60,000.0	60,000.0	60,000.0

Cantilevered Retaining Wall Design

Code: IBC 2003

Footing Design Results

		Toe	Heel
Factored Pressure	=	3,165	848 psf
Mu' : Upward	=	13,115	15,819 ft-#
Mu' : Downward	=	1,769	46,337 ft-#
Mu: Design	=	11,347	30,519 ft-#
Actual 1-Way Shear	=	18.74	38.44 psi
Allow 1-Way Shear	=	82.16	82.16 psi

Toe Reinforcing = # 9 @ 31.75 in
Heel Reinforcing = # 5 @ 14.00 in
Key Reinforcing = None Spec'd

Other Acceptable Sizes & Spacings

Toe: #4@ 6.50 in, #5@ 10.00 in, #6@ 14.00 in, #7@ 19.25 in, #8@ 25.25 in, #9@ 31
Heel: #4@ 5.00 in, #5@ 7.50 in, #6@ 10.75 in, #7@ 14.50 in, #8@ 19.25 in, #9@ 24.
Key:

Summary of Overturning & Resisting Forces & Moments

Item		.....OVERTURNING..... Force lbs	Distance ft	Moment ft-#
Heel Active Pressure	=	7,154.3	5.58	39,945.1
Toe Active Pressure	=	-129.1	0.75	-96.8
Surcharge Over Toe	=			
Adjacent Footing Load	=			
Added Lateral Load	=			
Load @ Stem Above Soil	=			
Total	=	7,025.3	**O.T.M.** =	39,848.3

Resisting/Overturning Ratio = **2.60**

Vertical Loads used for Soil Pressure = 17,110.6 lbs

Vertical component of active pressure used for soil pressure

		.....RESISTING..... Force lbs	Distance ft	Moment ft-#
Soil Over Heel	=	9,750.0	6.75	65,812.5
Sloped Soil Over Heel	=			
Surcharge Over Heel	=			
Adjacent Footing Load	=			
Axial Dead Load on Stem	=		0.00	
Soil Over Toe	=	195.0	1.50	292.5
Surcharge Over Toe	=			
Stem Weight(s)	=	2,812.5	3.63	10,195.3
Earth @ Stem Transitions	=			
Footing Weight	=	2,428.1	4.63	11,230.1
Key Weight	=	281.3	3.63	1,019.5
Vert. Component	=	1,643.7	9.25	15,204.5
Total	=	17,110.6 lbs	**R.M.=**	103,754.4

DESIGNER NOTES:

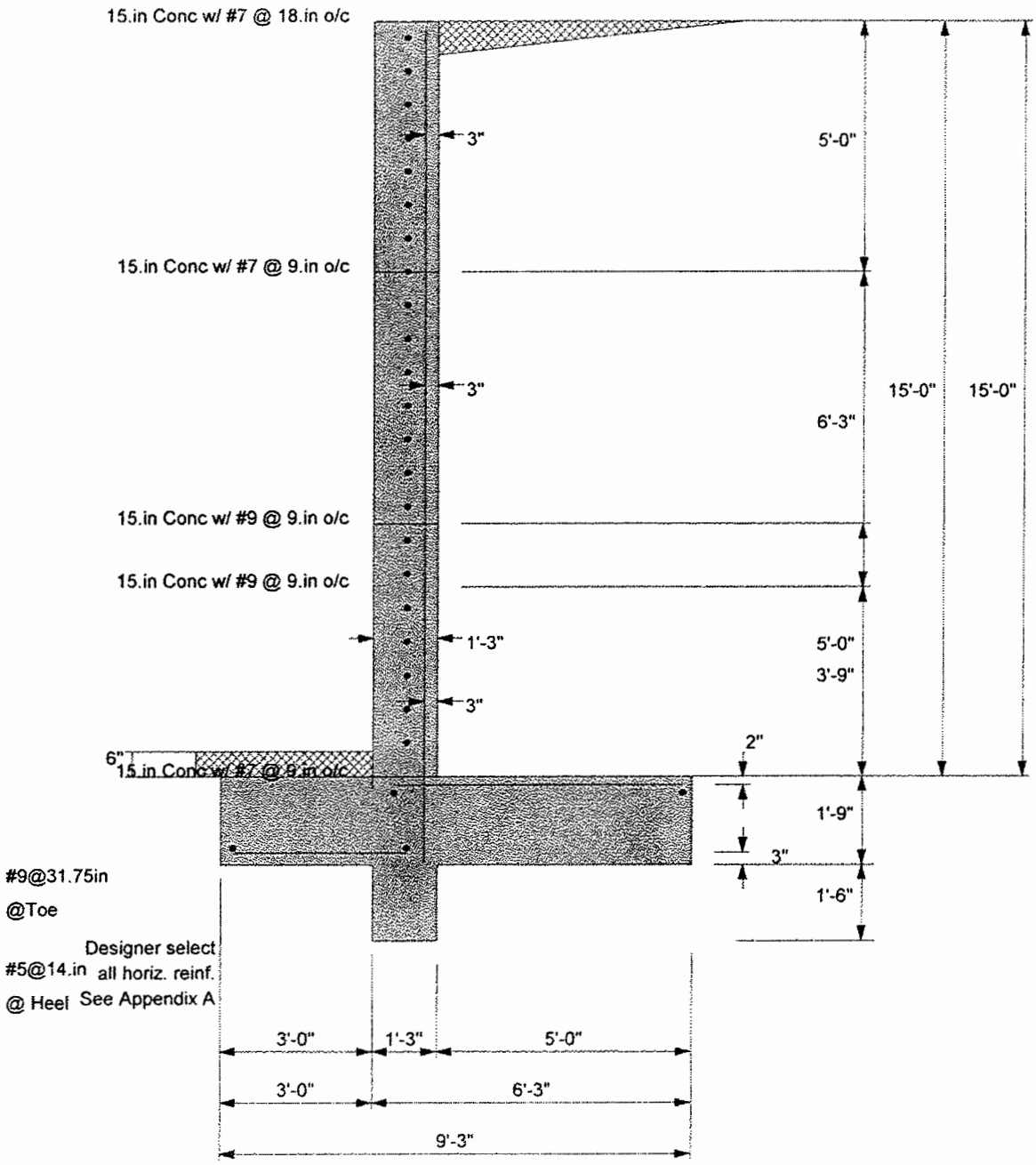
15.in Conc w/ #7 @ 18.in o/c
3"
5'-0"
15.in Conc w/ #7 @ 9.in o/c
3"
15'-0"
15'-0"
6'-3"
15.in Conc w/ #9 @ 9.in o/c
15.in Conc w/ #9 @ 9.in o/c
1'-3"
5'-0"
3'-9"
3"
2"
6"
15.in Conc w/ #7 @ 9.in o/c
1'-9"
3"
1'-6"
#9@31.75in
@Toe
Designer select
#5@14.in all horiz. reinf.
@ Heel See Appendix A
3'-0"
1'-3"
5'-0"
3'-0"
6'-3"
9'-3"

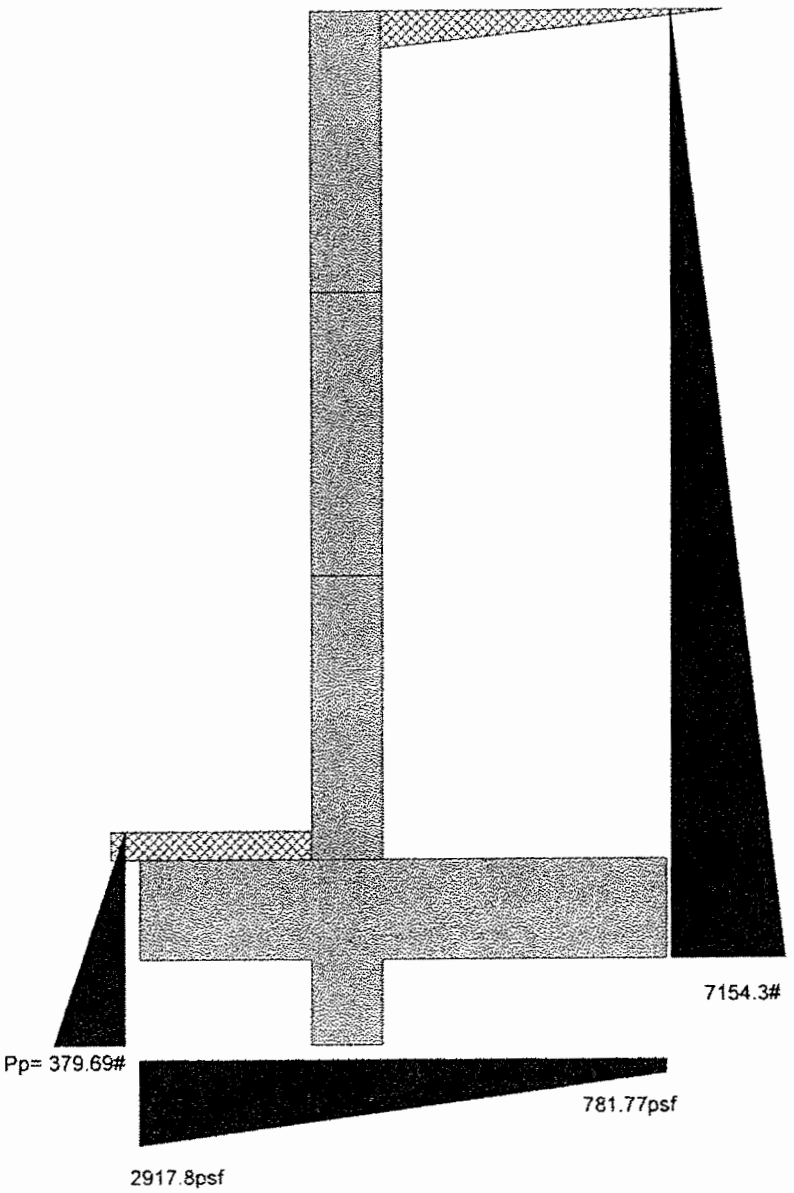
7154.3#
Pp= 379.69#
781.77psf
2917.8psf

TCPI
436 Creamery Way, Suite 100
Exton, Pa 19341
Los Alamos Retaining Wall No. 1

Title : Wall 'C' H= 15' Seismic
Job # : E-05129 Dsgnr: JJF
Description....
Wall 'C' Height (H) = 15'-0" Seismic Load , EFP = 61pcf

Page: _____
Date: MAY 25,2005

This Wall in File: C:\Program Files\RP2005\los alamos rw.r

Retain Pro 2005 , 7-April-2005, (c) 1989-2005
www.retainpro.com/support for latest release
Registration # : RP-1141385 2005001

Cantilevered Retaining Wall Design

Code: IBC 2003

Criteria

Retained Height	=	15.00 ft
Wall height above soil	=	0.00 ft
Slope Behind Wall	=	0.00 : 1
Height of Soil over Toe	=	6.00 in
Water height over heel	=	0.0 ft
Wind on Stem	=	0.0 psf

Soil Data

Allow Soil Bearing	=	5,000.0 psf
Equivalent Fluid Pressure Method		
Heel Active Pressure	=	62.0 psf/ft
Toe Active Pressure	=	62.0 psf/ft
Passive Pressure	=	54.0 psf/ft
Soil Density	=	130.00 pcf
Footing||Soil Friction	=	0.650
Soil height to ignore for passive pressure	=	0.00 in

Footing Dimensions & Strengths

Toe Width	=	3.00 ft
Heel Width	=	6.25
Total Footing Width	=	9.25
Footing Thickness	=	21.00 in
Key Width	=	15.00 in
Key Depth	=	18.00 in
Key Distance from Toe	=	3.00 ft

f'c = 3,000 psi Fy = 60,000 psi
Footing Concrete Density = 150.00 pcf
Min. As % = 0.0018
Cover @ Top = 2.00 in @ Btm.= 3.00 in

Surcharge Loads

Surcharge Over Heel = 0.0 psf
Used To Resist Sliding & Overturning
Surcharge Over Toe = 0.0 psf
Used for Sliding & Overturning

Lateral Load Applied to Stem

Lateral Load	=	0.0 #/ft
...Height to Top	=	0.00 ft
...Height to Bottom	=	0.00 ft

Adjacent Footing Load

Adjacent Footing Load	=	0.0 lbs
Footing Width	=	0.00 ft
Eccentricity	=	0.00 in
Wall to Ftg CL Dist	=	0.00 ft
Footing Type		
Base Above/Below Soil at Back of Wall	=	0.0 ft
Poisson's Ratio	=	0.300

Axial Load Applied to Stem

Axial Dead Load	=	0.0 lbs
Axial Live Load	=	0.0 lbs
Axial Load Eccentricity	=	0.0 in

*Design Summary

Wall Stability Ratios

Overturning	=	2.13 OK
Sliding	=	1.22 Ratio < 1.5!
Total Bearing Load	=	17,059 lbs
...resultant ecc.	=	16.93 in
Soil Pressure @ Toe	=	3,532 psf OK
Soil Pressure @ Heel	=	157 psf OK
Allowable	=	5,000 psf
Soil Pressure Less Than Allowable		
ACI Factored @ Toe	=	3,843 psf
ACI Factored @ Heel	=	170 psf
Footing Shear @ Toe	=	23.0 psi OK
Footing Shear @ Heel	=	45.1 psi OK
Allowable	=	82.2 psi

Sliding Calcs (Vertical Component NOT Used)

Lateral Sliding Force	=	8,540.5 lbs
less 100% Passive Force	= -	379.7 lbs
less 100% Friction Force	= -	10,053.5 lbs
Added Force Req'd	=	0.0 lbs OK
....for 1.5 : 1 Stability	=	2,377.6 lbs NG

Load Factors

Building Code	IBC 2003
Dead Load	1.200
Live Load	1.600
Earth, H	1.400
Wind, W	1.600
Seismic, E	1.000

Stem Construction

		Top Stem	2nd	3rd
Design Height Above Ftg	ft =	10.00	3.75	0.00
		Stem OK	Stem OK	Stem OK
Wall Material Above "Ht"	=	Concrete	Concrete	Concrete
Thickness	=	15.00	15.00	15.00
Rebar Size	=	# 7	# 7	# 9
Rebar Spacing	=	18.00	9.00	9.00
Rebar Placed at	=	Edge	Edge	Edge
Design Data				
fb/FB + fa/Fa	=	**0.087**	**0.510**	**0.761**
Total Force @ Section	lbs =	1,085.0	5,492.8	9,754.2
Moment....Actual	ft-# =	1,808.3	20,598.0	48,823.2
Moment.....Allowable	ft-# =	20,892.0	40,368.0	64,133.3
Shear.....Actual	psi =	7.5	38.1	67.7
Shear.....Allowable	psi =	82.2	82.2	82.2
Wall Weight	psf =	187.5	187.5	187.5
Rebar Depth 'd'	in =	12.00	12.00	12.00
LAP SPLICE IF ABOVE	in =	37.38	37.38	48.06
LAP SPLICE IF BELOW	in =	37.38	37.38	
HOOK EMBED INTO FTG	in =			17.25
Masonry Data				
f'm	psi =			
Fs	psi =			
Solid Grouting	=			
Special Inspection	=			
Modular Ratio 'n'	=			
Short Term Factor	=			
Equiv. Solid Thick.	=			
Masonry Block Type =				
Concrete Data				
f'c	psi =	3,000.0	3,000.0	3,000.0
Fy	psi =	60,000.0	60,000.0	60,000.0

Retain Pro 2005 , 7-April-2005, (c) 1989-2005
www.retainpro.com/support for latest release
Registration # : RP-1141385 2005001

Cantilevered Retaining Wall Design

Code: IBC 2003

Footing Design Results

		Toe	Heel	
Factored Pressure	=	3,843	170	psf
Mu' : Upward	=	15,505	10,401	ft-#
Mu' : Downward	=	1,769	45,923	ft-#
Mu: Design	=	13,737	35,521	ft-#
Actual 1-Way Shear	=	22.98	45.08	psi
Allow 1-Way Shear	=	82.16	82.16	psi
Toe Reinforcing	=	# 5 @ 15.00 in		
Heel Reinforcing	=	# 5 @ 14.00 in		
Key Reinforcing	=	None Spec'd		

Other Acceptable Sizes & Spacings

Toe: #4@ 6.50 in, #5@ 10.00 in, #6@ 14.00 in, #7@ 19.25 in, #8@ 25.25 in, #9@ 31
Heel: #4@ 4.25 in, #5@ 6.50 in, #6@ 9.25 in, #7@ 12.50 in, #8@ 16.50 in, #9@ 20.7
Key:

Summary of Overturning & Resisting Forces & Moments

Item		.....OVERTURNING..... Force lbs	Distance ft	Moment ft-#
Heel Active Pressure	=	8,697.4	5.58	48,560.7
Toe Active Pressure	=	-156.9	0.75	-117.7
Surcharge Over Toe	=			
Adjacent Footing Load	=			
Added Lateral Load	=			
Load @ Stem Above Soil	=			
Total	=	8,540.5	**O.T.M.** =	48,443.0

Resisting/Overturning Ratio = **2.13**

Vertical Loads used for Soil Pressure = 17,058.8 lbs

Vertical component of active pressure used for soil pressure

		.....RESISTING..... Force lbs	Distance ft	Moment ft-#
Soil Over Heel	=	9,750.0	6.75	65,812.5
Sloped Soil Over Heel	=			
Surcharge Over Heel	=			
Adjacent Footing Load	=			
Axial Dead Load on Stem	=		0.00	
Soil Over Toe	=	195.0	1.50	292.5
Surcharge Over Toe	=			
Stem Weight(s)	=	2,812.5	3.63	10,195.3
Earth @ Stem Transitions	=			
Footing Weight	=	2,428.1	4.63	11,230.1
Key Weight	=	281.3	3.63	1,019.5
Vert. Component	=	1,591.9	9.25	14,725.1
	Total =	17,058.8 lbs	**R.M.=**	103,275.0

DESIGNER NOTES:

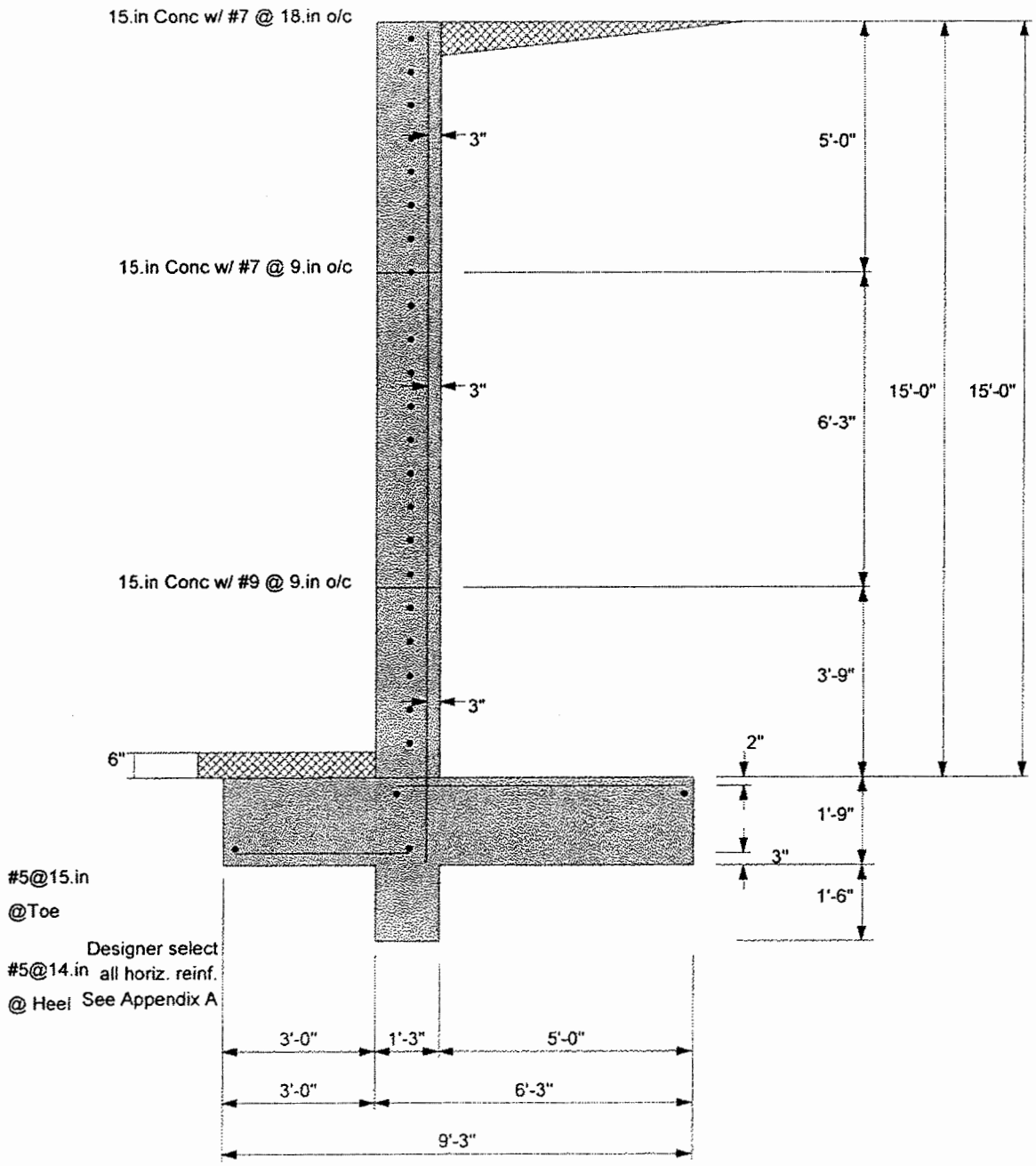
15.in Conc w/ #7 @ 18.in o/c
3"
5'-0"
15.in Conc w/ #7 @ 9.in o/c
3"
15'-0"
15'-0"
6'-3"
15.in Conc w/ #9 @ 9.in o/c
3'-9"
3"
6"
2"
1'-9"
3"
1'-6"
#5@15.in
@Toe
Designer select
#5@14.in all horiz. reinf.
@ Heel See Appendix A
3'-0"
1'-3"
5'-0"
3'-0"
6'-3"
9'-3"

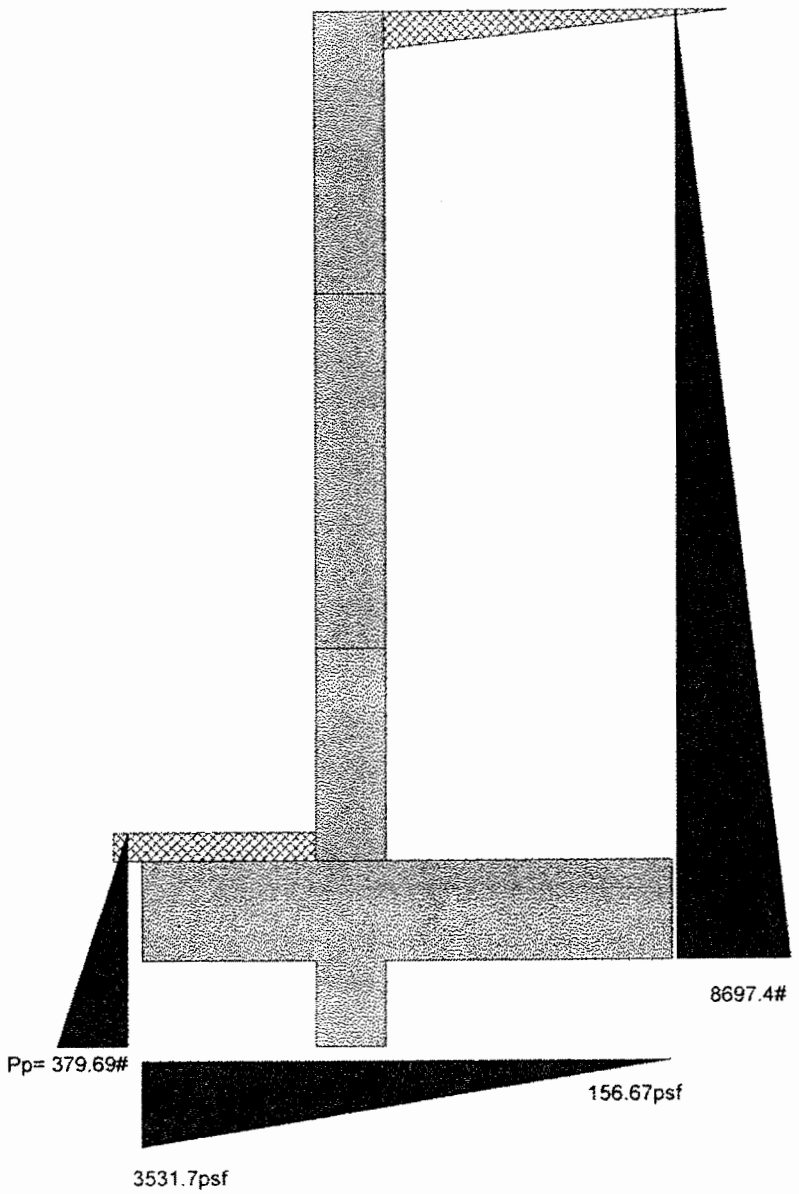
8697.4#
Pp= 379.69#
156.67psf
3531.7psf

TCPI
436 Creamery Way, Suite 100
Exton, Pa 19341
Los Alamos Retaining Wall No. 1

Title : Wall 'C' H=15' Equipment
Job # : E-05129 Dsgnr: JJF
Description....
Wall "C" Height (H) = 15'-0" Equipment Load EFP = 46

Page: _____
Date: MAY 25,2005

This Wall in File: C:\Program Files\RP2005\los alamos rw.r

Retain Pro 2005 , 7-April-2005, (c) 1989-2005
www.retainpro.com/support for latest release
Registration # : RP-1141385 2005001

Cantilevered Retaining Wall Design

Code: IBC 2003

Criteria

Retained Height	=	15.00 ft
Wall height above soil	=	0.00 ft
Slope Behind Wall	=	0.00 : 1
Height of Soil over Toe	=	6.00 in
Water height over heel	=	0.0 ft
Wind on Stem	=	0.0 psf

Soil Data

Allow Soil Bearing	=	5,000.0 psf
Equivalent Fluid Pressure Method		
Heel Active Pressure	=	46.0 psf/ft
Toe Active Pressure	=	46.0 psf/ft
Passive Pressure	=	54.0 psf/ft
Soil Density	=	130.00 pcf
Footing||Soil Friction	=	0.650
Soil height to ignore for passive pressure	=	0.00 in

Footing Dimensions & Strengths

Toe Width	=	3.00 ft
Heel Width	=	6.25
Total Footing Width	=	9.25
Footing Thickness	=	21.00 in
Key Width	=	15.00 in
Key Depth	=	18.00 in
Key Distance from Toe	=	3.00 ft

f'c = 3,000 psi Fy = 60,000 psi
Footing Concrete Density = 150.00 pcf
Min. As % = 0.0018
Cover @ Top = 2.00 in @ Btm.= 3.00 in

Surcharge Loads

Surcharge Over Heel	=	0.0 psf
Used To Resist Sliding & Overturning		
Surcharge Over Toe	=	0.0 psf
Used for Sliding & Overturning		

Lateral Load Applied to Stem

Lateral Load	=	0.0 #/ft
...Height to Top	=	0.00 ft
...Height to Bottom	=	0.00 ft

Adjacent Footing Load

Adjacent Footing Load	=	2,000.0 lbs
Footing Width	=	8.00 ft
Eccentricity	=	0.00 in
Wall to Ftg CL Dist	=	6.00 ft
Footing Type		
Base Above/Below Soil at Back of Wall	=	0.0 ft
Poisson's Ratio	=	0.300

Axial Load Applied to Stem

Axial Dead Load	=	0.0 lbs
Axial Live Load	=	0.0 lbs
Axial Load Eccentricity	=	0.0 in

*Design Summary

Wall Stability Ratios

Overturning	=	2.03 OK
Sliding	=	1.46 Ratio < 1.5!
Total Bearing Load	=	15,955 lbs
...resultant ecc.	=	20.45 in
Soil Pressure @ Toe	=	3,641 psf OK
Soil Pressure @ Heel	=	0 psf OK
Allowable	=	5,000 psf
Soil Pressure Less Than Allowable		
ACI Factored @ Toe	=	4,414 psf
ACI Factored @ Heel	=	0 psf
Footing Shear @ Toe	=	26.5 psi OK
Footing Shear @ Heel	=	36.7 psi OK
Allowable	=	82.2 psi

Sliding Calcs (Vertical Component NOT Used)

Lateral Sliding Force	=	7,387.1 lbs
less 100% Passive Force	=	- 379.7 lbs
less 100% Friction Force	=	- 10,370.5 lbs
Added Force Req'd	=	0.0 lbs OK
....for 1.5 : 1 Stability	=	330.4 lbs NG

Load Factors

Building Code	IBC 2003
Dead Load	1.200
Live Load	1.600
Earth, H	1.600
Wind, W	1.600
Seismic, E	1.000

Stem Construction

		Top Stem	2nd	3rd
		Stem OK	Stem OK	Stem OK
Design Height Above Ftg	ft =	10.00	3.75	0.00
Wall Material Above "Ht"	=	Concrete	Concrete	Concrete
Thickness	=	15.00	15.00	15.00
Rebar Size	=	# 7	# 7	# 9
Rebar Spacing	=	18.00	9.00	9.00
Rebar Placed at	=	Edge	Edge	Edge
Design Data				
fb/FB + fa/Fa	=	**0.106**	**0.593**	**0.833**
Total Force @ Section	lbs =	1,370.8	5,977.6	9,866.1
Moment....Actual	ft-# =	2,211.9	23,950.7	53,398.9
Moment.....Allowable	ft-# =	20,892.0	40,368.0	64,133.3
Shear.....Actual	psi =	9.5	41.5	68.5
Shear.....Allowable	psi =	82.2	82.2	82.2
Wall Weight	psf =	187.5	187.5	187.5
Rebar Depth 'd'	in =	12.00	12.00	12.00
LAP SPLICE IF ABOVE	in =	37.38	37.38	48.06
LAP SPLICE IF BELOW	in =	37.38	37.38	
HOOK EMBED INTO FTG	in =			17.25
Masonry Data				
f'm	psi =			
Fs	psi =			
Solid Grouting	=			
Special Inspection	=			
Modular Ratio 'n'	=			
Short Term Factor	=			
Equiv. Solid Thick.	=			
Masonry Block Type =				
Concrete Data				
f'c	psi =	3,000.0	3,000.0	3,000.0
Fy	psi =	60,000.0	60,000.0	60,000.0

Retain Pro 2005 , 7-April-2005, (c) 1989-2005
www.retainpro.com/support for latest release
Registration # : RP-1141385 2005001

Cantilevered Retaining Wall Design

Code: IBC 2003

Footing Design Results

		Toe	Heel
Factored Pressure	=	4,414	0 psf
Mu' : Upward	=	17,597	7,718 ft-#
Mu' : Downward	=	1,769	33,188 ft-#
Mu: Design	=	15,828	25,470 ft-#
Actual 1-Way Shear	=	26.48	36.69 psi
Allow 1-Way Shear	=	82.16	82.16 psi

Toe Reinforcing	=	# 9 @ 31.75 in
Heel Reinforcing	=	# 5 @ 14.00 in
Key Reinforcing	=	None Spec'd

Other Acceptable Sizes & Spacings

Toe: #4@ 6.50 in, #5@ 10.00 in, #6@ 14.00 in, #7@ 19.25 in, #8@ 25.25 in, #9@ 31
Heel: #4@ 6.00 in, #5@ 9.00 in, #6@ 13.00 in, #7@ 17.50 in, #8@ 23.00 in, #9@ 29.
Key:

Summary of Overturning & Resisting Forces & Moments

Item		.....OVERTURNING..... Force lbs	Distance ft	Moment ft-#
Heel Active Pressure	=	6,452.9	5.58	36,028.9
Toe Active Pressure	=	-116.4	0.75	-87.3
Surcharge Over Toe	=			
Adjacent Footing Load	=	1,050.6	8.85	9,296.0
Added Lateral Load	=			
Load @ Stem Above Soil	=			
Total	=	7,387.1	**O.T.M.** =	45,237.6

Resisting/Overturning Ratio = **2.03**

Vertical Loads used for Soil Pressure = 15,954.7 lbs

Vertical component of active pressure NOT used for soil pressure

		.....RESISTING..... Force lbs	Distance ft	Moment ft-#
Soil Over Heel	=	9,750.0	6.75	65,812.5
Sloped Soil Over Heel	=			
Surcharge Over Heel	=			
Adjacent Footing Load	=	487.8	6.75	3,292.7
Axial Dead Load on Stem	=		0.00	
Soil Over Toe	=	195.0	1.50	292.5
Surcharge Over Toe	=			
Stem Weight(s)	=	2,812.5	3.63	10,195.3
Earth @ Stem Transitions	=			
Footing Weight	=	2,428.1	4.63	11,230.1
Key Weight	=	281.3	3.63	1,019.5
Vert. Component	=			
Total	=	15,954.7 lbs	**R.M.=**	91,842.6

DESIGNER NOTES:

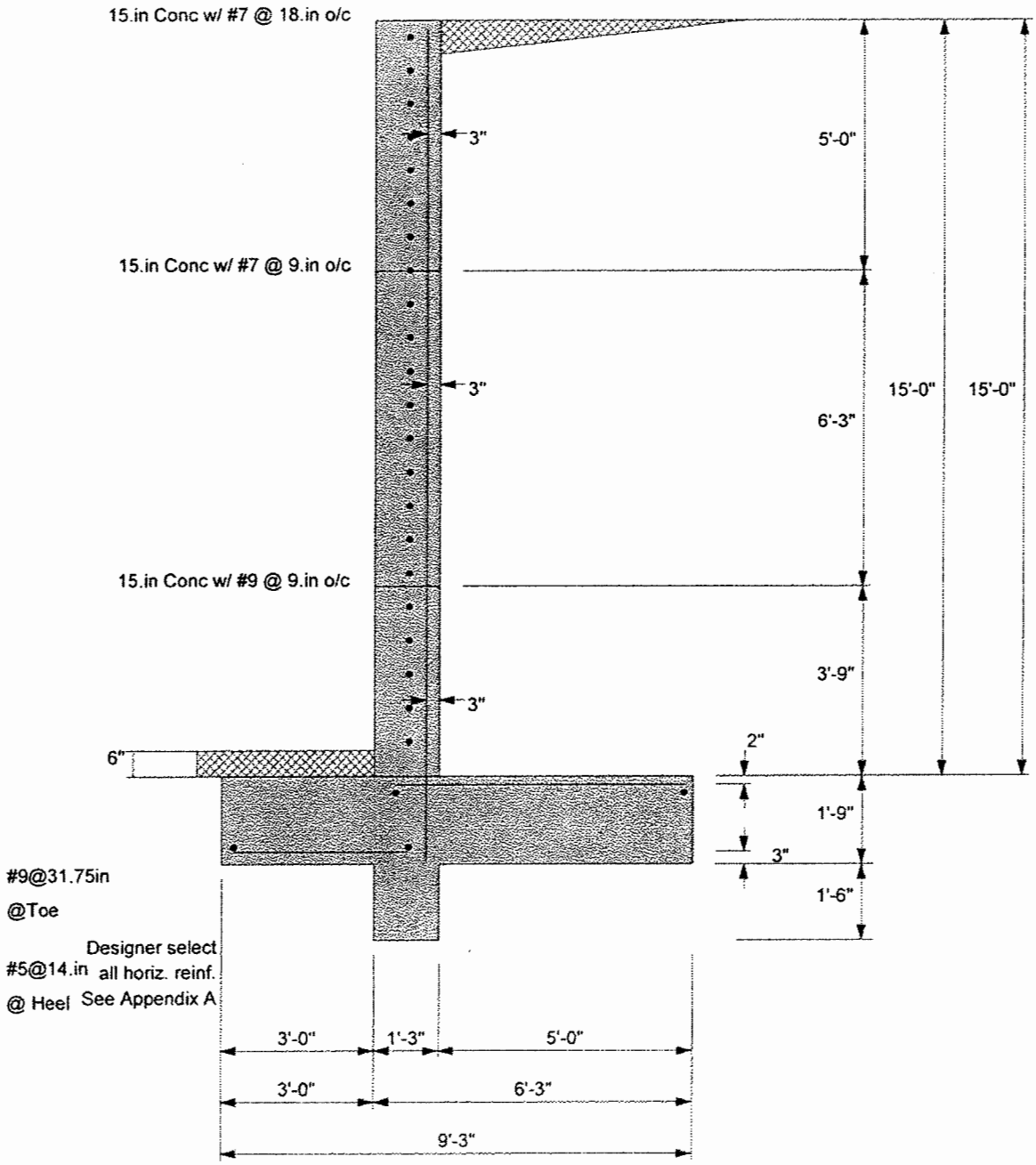
15.in Conc w/ #7 @ 18.in o/c
3"
5'-0"
15.in Conc w/ #7 @ 9.in o/c
3"
15'-0"
15'-0"
6'-3"
15.in Conc w/ #9 @ 9.in o/c
3'-9"
3"
2"
6"
1'-9"
3"
1'-6"
#9@31.75in
@Toe
Designer select
#5@14.in all horiz. reinf.
@ Heel See Appendix A
3'-0"
1'-3"
5'-0"
3'-0"
6'-3"
9'-3"

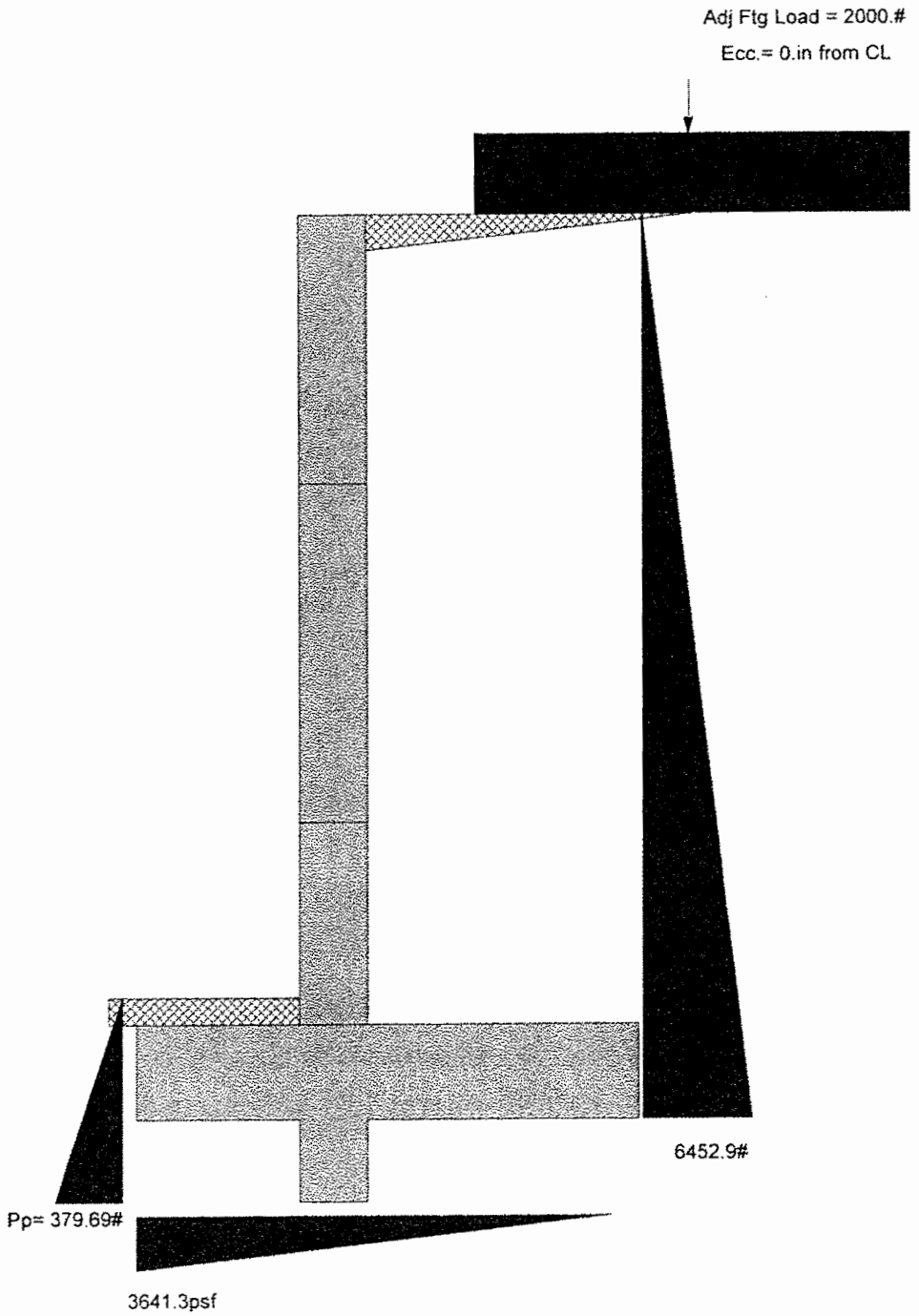
Adj Ftg Load = 2000.#
Ecc.= 0.in from CL
6452.9#
Pp= 379.69#
3641.3psf

WALL Mark 'C' Seismic Loads

Definitions:

B = Width of Toe (feet)
C = Width of Heel (feet)
W = Width of Base (feet)
h wall = Height of Wall over base (feet)
t_{base} = thickness of Base (feet)
t_{stem} = Thickness of Stem (feet)
γ = density of backfill (pcf)
$\gamma_{concrete}$ density = 150 pcf
EFP_{static} = Design equivalent fluid pressure (pcf), static condition.
EFP_{AE} = Design equivalent fluid pressure (pcf), Active Earth pressure under seismic conditions..
ϕ = Internial angle of friction of the soil.
δ = Friction angle of soil to concrete wall.
K_h = Alternate seismic force developed from the Geotechnical Calculations page 12 in Appendix 'B'

Wall Mk. 'C' Data:

$B := 3.0$ (feet) $h_{wall} := 15.0$ (feet) $t_{stem} := 1.25$ (feet)

$C := 5.0$ (feet) $W := 9.25$ (feet) $t_{base} := 1.75$ (feet)

Soil Data: $\gamma := 130$ (pcf) $\delta := 22 \cdot deg$ $\phi := 32 \cdot deg$

$EFP_{static} := 46$ (pcf)

$EFP_{AE} := 62$ (pcf)

$K_h := 0.09$

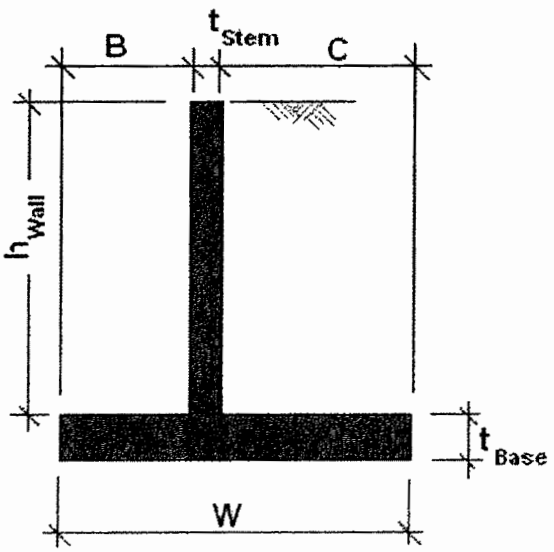

WALL STABILITY ANALYSIS

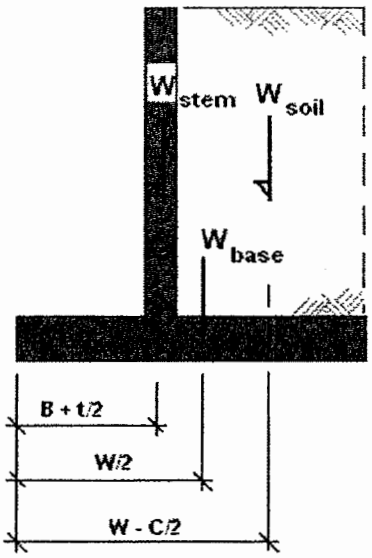

Stabilizing Forces

Weights: (kips.per foot)

$W_{stem} := (0.150) \cdot h_{wall} \cdot t_{stem}$ $W_{stem} = 2.813$

$W_{base} := (0.150) \cdot W \cdot t_{base}$ $W_{base} = 2.428$

$W_{soil} := \frac{\gamma \cdot h_{wall} \cdot C}{1000}$ $W_{soil} = 9.75$

$H := h_{wall} + t_{base}$ $H = 16.75$ (feet)

Driving Forces:

$P_{ST} := \frac{(EFP_{static}) \cdot \frac{1}{2} \cdot (H)^2}{1000}$ $P_{ST} = 6.453$ (kips)

$P_{SE} := \frac{(EFP_{AE}) \cdot \frac{1}{2} \cdot (H)^2}{1000}$ $P_{SE} = 8.697$ (kips)

$\Delta P_1 := P_{SE} - P_{ST}$ $\Delta P_1 = 2.244$ (kips)

$\Delta P_2 := \frac{K_h \cdot \gamma \cdot (H)^2}{1000}$ $\Delta P_2 = 3.283$ (kips)

The larger value of either ΔP_1 or ΔP_2 is to be used in the seismic analysis

Let: $\Delta := \begin{pmatrix} \Delta P_1 \\ \Delta P_2 \end{pmatrix}$ $\Delta P := \max(\Delta)$ $\Delta P = 3.283$ (kips)

Driving Forces and Moments about the Toe:

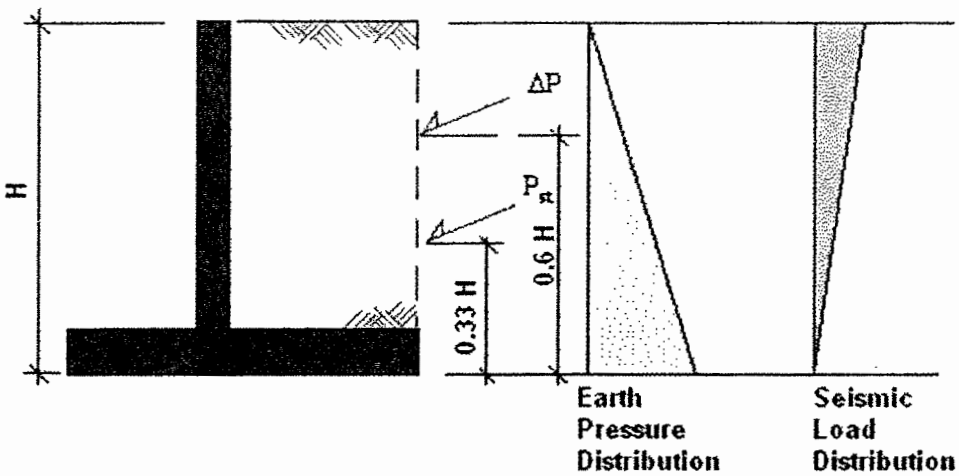

Horizontal Driving Force (**HDF**) is the sum of P_{st} and ΔP in the horizontal direction:

$HDF := (P_{ST} + \Delta P)\cdot\cos(\delta)$ $\quad HDF = 9.027$ (kips)

Driving Moment ($\mathbf{M_d}$) is the sum of the driving moments about the Toe.

$M_d := (P_{ST}\cdot 0.333\cdot H)\cdot\cos(\delta) + (\Delta P\cdot 0.6\cdot H)\cdot\cos(\delta)$ $\quad M_d = 63.96$ (ft-kips)

Resisting Forces and Moments about the Toe:

Resisting Forces (**RF**) neglecting passive pressure, a conservative analysis:

$RF := \tan(\phi)(W_{stem} + W_{base} + W_{soil} + P_{ST}\cdot\sin(\delta) + \Delta P\cdot\sin(\delta))$

$RF = 11.646$ (kips)

"Factor of Safety" against sliding is the ratio of **RF** to **HDF**

$Ratio_{sliding} := \frac{RF}{HDF}$ $\quad Ratio_{sliding} = 1.29$

Resisting Moments about the Toe M_r:

$$M_r := W_{stem}\cdot(B + t_{stem}) + W_{base}\cdot\left(\frac{W}{2}\right) + W_{soil}\cdot\left(W - \frac{C}{2}\right) + (P_{ST} + \Delta P)\cdot W\cdot\sin(\delta)$$

$M_r = 39.18$ (ft-kips)

"Factor of Safety" against overturning the ratio of M_r to M_d

$Ratio_{OT} := \frac{M_r}{M_d}$ $Ratio_{OT} = 1.893$

Calculate Soil Bearing Pressurs:

Net Moment: $\Delta M := M_r - M_d$ $\Delta M = 18.48$ (ft-kips)

$$X := \frac{\Delta M}{(W_{stem} + W_{base} + W_{soil} + P_{ST}\cdot\sin(\delta) + \Delta P\cdot\sin(\delta))}$$ $X = 2.088$ (feet)

$$R := (W_{stem} + W_{base} + W_{soil} + P_{ST}\cdot\sin(\delta) + \Delta P\cdot\sin(\delta))$$ $R = 8.85$ (kips)

Eccentricity (e): $e := \frac{W}{2} - X$ $e = 1.037$ (feet) $\frac{W}{6} = 1.042$ (feet)

$$Eccentricity := \begin{cases} \text{"OK Within Middle Third"} & \text{if } e \le \frac{W}{6} \\ \text{"Non in Middle one-third"} & \text{otherwise} \end{cases}$$

Eccentricity = "OK Within Middle Third"

$SP_2 := \frac{R}{W}\cdot\left(1 + \frac{e}{W}\right)$ $SP_2 = 1.651$ Maximum Soil Pearing Pressure (kips/ft^2)

$SP_1 := \frac{R}{W}\cdot\left(1 - \frac{e}{W}\right)$ $SP_1 = 1.181$ Minimum Soil Pearing Pressure (kips/ft^2)

Concrete Design:

The design on the concrete elements will be in accordance with ACI 318-02.

See Section 9.2 of ACI 319-02

$U_{DL} := 1.2 \qquad U_H := 1.6 \qquad U_E := 1.0$

$$R_{ult} := \left(U_{DL} \cdot W_{stem} + U_{DL} \cdot W_{base} + U_E \cdot W_{soil} + U_E \cdot P_{ST} \cdot \sin(\delta) + U_E \cdot \Delta P \cdot \sin(\delta)\right)$$

$$M_{d_ult} := U_E \cdot \left[\left(P_{ST} \cdot 0.333 \cdot H\right) \cdot \cos(\delta) + \left(\Delta P \cdot 0.6 \cdot H\right) \cdot \cos(\delta)\right]$$

$$M_{r_ult_1} := U_{DL} \cdot W_{stem} \cdot \left(B + t_{stem}\right) + U_{DL} \cdot W_{base} \cdot \left(\frac{W}{2}\right) + U_{DL} \cdot W_{soil} \cdot \left(W - \frac{C}{2}\right)$$

$$M_{r_ult_2} := U_{DL} \cdot \left[\left(P_{ST} + \Delta P\right) \cdot W \cdot \sin(\delta)\right]$$

$$M_{r_ult} := M_{r_ult_1} + M_{r_ult_2}$$

Net Ultimate Moment: $\Delta M_{ult} := M_{r_ult} - M_{d_ult} \qquad \Delta M_{ult} = 26.316$ (ft-kips)

$X_{ult} := \dfrac{\Delta M_{ult}}{\left(R_{ult}\right)} \qquad X_{ult} = 2.79$ (feet)

$R_{ult} = 9.432$ (kips)

Eccentricity (e): $e_{ult} := \dfrac{W}{2} - X_{ult} \qquad e_{ult} = 0.335$ (feet) $\qquad \dfrac{W}{6} = 1.042$ (feet)

$$\text{Eccentricity} := \begin{cases} \text{"OK Within Middle Third"} & \text{if } e_{ult} \le \dfrac{W}{6} \\ \text{"Non in Middle one-third"} & \text{otherwise} \end{cases}$$

Eccentricity = "OK Within Middle Third"

$SP_{2_ult} := \dfrac{R_{ult}}{W} \cdot \left(1 + \dfrac{e_{ult}}{W}\right) \qquad SP_{2_ult} = 1.59$ Maximum Soil Pearing Pressure (kips/ft^2)

$SP_{1_ult} := \frac{R_{ult}}{W} \cdot \left(1 - \frac{e_{ult}}{W}\right)$ $SP_{1_ult} = 1.428$ Minimum Soil Pearing Pressure (kips/ft²)

$\Delta SP_{ult} := SP_{2_ult} - SP_{1_ult}$ $\Delta SP_{ult} = 0.162$ (kips/ft²)

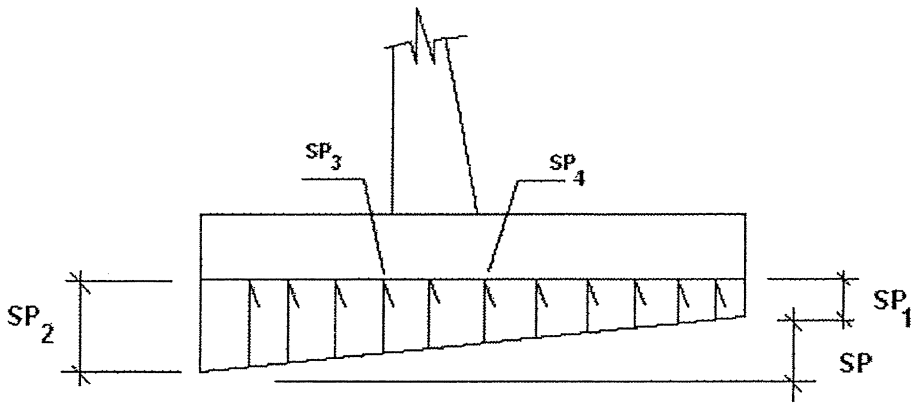

Pressure Diagram - Toe & Heel

Soil Pressure at Front Face of Stem:

$SP_{3_ult} := SP_{2_ult} - \frac{\Delta SP_{ult}}{W} \cdot (B)$ $SP_{3_ult} = 1.538$ (ksf)

Soil Pressure at Rear Face of Stem:

$SP_{4_ult} := SP_{2_ult} - \frac{\Delta SP_{ult}}{W} \cdot (B + t_{stem})$ $SP_{4_ult} = 1.512$ (ksf)

Moment at Front Face of Stem:

$$M_{toe} := SP_{3_ult} \cdot \frac{B^2}{2} + (SP_{2_ult} - SP_{3_ult}) \cdot \frac{(B)}{2} \cdot \left(\frac{2}{3}\right) \cdot B - U_{DL} \cdot (0.150) \cdot t_{base} \cdot \left(\frac{B^2}{2}\right)$$

$M_{toe} = 2.605$ (ft-kips)

Concrete Data:

$f'_c := 3$ ksi $\quad f_y := 60$ ksi $\quad M_u := M_{toe}$ ft-kips

$b := 12$ inches $\quad d := (12)\cdot t_{base} - 4 \quad d = 14$ inches $\quad \phi_f := 0.90$

$\mathbf{A_s}$ calculation is from CRSI Handbook

$$A_{s_required} := \frac{1.7\cdot f'_c\cdot b\cdot d}{2\cdot f_y} - \frac{1}{2}\cdot\sqrt{\frac{2.89\cdot(f'_c\cdot b\cdot d)^2}{(f_y)^2} - \frac{6.8\cdot f'_c\cdot b\cdot M_u\cdot 12}{\phi_f\cdot(f_y)^2}}$$

$A_{s_required} = 0.041$ Inches^2 $\quad \rho := \frac{A_{s_required}}{12\cdot d} \quad \rho = 0.0002$

Shear in Toe:

Soil Pressure at d from front face:

$$SP_{31_ult} := SP_{2_ult} - \frac{\Delta SP_{ult}}{W}\cdot\left(B - \frac{d}{12}\right) \qquad SP_{31_ult} = 1.568 \quad \text{(ksf)}$$

$$V_{toe} := SP_{31_ult}\cdot\left(B - \frac{d}{12}\right) + (SP_{2_ult} - SP_{31_ult})\cdot\left(\frac{1}{2}\right)\cdot\left(B - \frac{d}{12}\right)$$

$V_{toe} = 1.316$ (kips/foot)

$$\phi V_n := \frac{0.75\cdot 12\cdot d\cdot(2)\cdot\sqrt{f'_c\cdot 1000}}{1000} \qquad \phi V_n = 13.803 \quad \text{(kips/foot)}$$

Moment at Rear Face of Stem in the Heel:

$$M_{heel} := SP_{1_ult}\cdot\frac{C^2}{2} + (SP_{4_ult} - SP_{1_ult})\cdot\frac{(C)}{2}\cdot\left(\frac{1}{3}\right)\cdot C - U_{DL}\cdot(0.150)\cdot t_{base}\cdot\left(\frac{C^2}{2}\right)$$

$M_{heel} = 6.265$ (ft-kips) Let: $M_u := M_{heel}$

A_s calculation is from CRSI Handbook

$$A_{s_required} := \frac{1.7 \cdot f'_c \cdot b \cdot d}{2 \cdot f_y} - \frac{1}{2} \cdot \sqrt{\frac{2.89 \cdot (f'_c \cdot b \cdot d)^2}{(f_y)^2} - \frac{6.8 \cdot f'_c \cdot b \cdot M_u \cdot 12}{\phi_f \cdot (f_y)^2}}$$

$A_{s_required} = 0.292$ Inches^2 $\rho := \frac{A_{s_required}}{12 \cdot d}$ $\rho = 0.0014$

Shear in Hell:

Soil Pressure at d from front rear face of stem:

$$SP_{41_ult} := SP_{1_ult} + \frac{\Delta SP_{ult}}{W} \cdot \left(C - \frac{d}{12}\right) \qquad SP_{41_ult} = 2.108 \quad \text{(ksf)}$$

$$V_{heel} := SP_{1_ult} \cdot \left(C - \frac{d}{12}\right) + (SP_{41_ult} - SP_{1_ult}) \cdot \left(\frac{1}{2}\right) \cdot \left(C - \frac{d}{12}\right)$$

$V_{heel} = 7.428$ (kips/foot)

$$\phi V_n := \frac{0.75 \cdot 12 \cdot d \cdot (2) \cdot \sqrt{f'_c \cdot 1000}}{1000} \qquad \phi V_n = 16.76 \quad \text{(kips/foot)}$$

Moments in Stem:

Driving Forces:

$$P_{ST} := \frac{(EFP_{static}) \cdot \frac{1}{2} \cdot (h_{wall})^2}{1000} \qquad P_{ST} = 5.175 \quad \text{(kips)}$$

$$P_{SE} := \frac{(EFP_{AE}) \cdot \frac{1}{2} \cdot (h_{wall})^2}{1000} \qquad P_{SE} = 6.975 \quad \text{(kips)}$$

$$\Delta P_I := P_{SE} - P_{ST} \qquad \Delta P_I = 1.8 \quad \text{(kips)}$$

$$\Delta P_2 := \frac{K_h \cdot \gamma \cdot (h_{wall})^2}{1000} \qquad \Delta P_2 = 2.632 \qquad \text{(kips)}$$

The larger value of either ΔP_1 or ΔP_2 is to be used in the seismic analysis

Let: $\Delta := \begin{pmatrix} \Delta P_1 \\ \Delta P_2 \end{pmatrix}$ $\qquad \Delta P := \max(\Delta) \qquad \Delta P = 2.632 \qquad$ (kips)

$$M_{stem} := U_E \cdot \left[\left(P_{ST} \cdot \cos(\delta) \cdot 0.333 h_{wall} \right) + \left(\Delta P \cdot 0.600 \cdot h_{wall} \right) \right]$$

$M_{stem} = 47.659$ (ft-kips) $\qquad$ Let: $M_u := M_{stem} \qquad d := (12) \cdot t_{stem} - 3.0$

$d = 12$ (inches)

A_s calculation is from CRSI Handbook

$$A_{s_required} := \frac{1.7 \cdot f'_c \cdot b \cdot d}{2 \cdot f_y} - \frac{1}{2} \cdot \sqrt{\frac{2.89 \cdot (f'_c \cdot b \cdot d)^2}{(f_y)^2} - \frac{6.8 \cdot f'_c \cdot b \cdot M_u \cdot 12}{\phi_f \cdot (f_y)^2}}$$

$A_{s_required} = 0.957$ Inches^2 $\qquad \rho := \frac{A_{s_required}}{12 \cdot d} \qquad \rho = 0.0066$

WALL MK. 'D'

Loading Case	Overturning Ratio	Sliding Ratio	Maximum Soil Bearing Pressure	Controlling Case for Strength Design	Remarks
Normal	2.50	1.44	3990		
Seismic 1	2.04	1.18	4840		
Compaction Equipment	2.03	1.50	4720	+	
Seismic 2	1.85	1.30	5360		

TCPI
436 Creamery Way, Suite 100
Exton, Pa 19341
Los Alamos Retaining Wall No. 1

Title : Wall 'D' H=20' Normal
Job # : E-05129 Dsgnr: JJF
Description....
Wall 'D' Height "H" = 20'-0" Normal Loads EFP = 51pcf

Page: _____
Date: MAY 24,2005

This Wall in File: C:\Program Files\RP2005\los alamos rw.r

Retain Pro 2005 , 7-April-2005, (c) 1989-2005
www.retainpro.com/support for latest release
Registration # : RP-1141385 2005001

Cantilevered Retaining Wall Design

Code: IBC 2003

Criteria

Retained Height	=	20.00 ft
Wall height above soil	=	0.00 ft
Slope Behind Wall	=	0.00 : 1
Height of Soil over Toe	=	6.00 in
Water height over heel	=	0.0 ft
Wind on Stem	=	0.0 psf

Soil Data

Allow Soil Bearing	=	5,000.0 psf
Equivalent Fluid Pressure Method		
Heel Active Pressure	=	51.0 psf/ft
Toe Active Pressure	=	51.0 psf/ft
Passive Pressure	=	54.0 psf/ft
Soil Density	=	130.00 pcf
Footing||Soil Friction	=	0.650
Soil height to ignore for passive pressure	=	0.00 in

Footing Dimensions & Strengths

Toe Width	=	4.00 ft
Heel Width	=	8.00
Total Footing Width	=	12.00
Footing Thickness	=	27.00 in
Key Width	=	24.00 in
Key Depth	=	24.00 in
Key Distance from Toe	=	4.00 ft

f'c = 3,000 psi Fy = 60,000 psi
Footing Concrete Density = 150.00 pcf
Min. As % = 0.0018
Cover @ Top = 2.00 in @ Btm.= 3.00 in

Surcharge Loads

Surcharge Over Heel	=	0.0 psf
Used To Resist Sliding & Overturning		
Surcharge Over Toe	=	0.0 psf
Used for Sliding & Overturning		

Lateral Load Applied to Stem

Lateral Load	=	0.0 #/ft
...Height to Top	=	0.00 ft
...Height to Bottom	=	0.00 ft

Adjacent Footing Load

Adjacent Footing Load	=	0.0 lbs
Footing Width	=	0.00 ft
Eccentricity	=	0.00 in
Wall to Ftg CL Dist	=	0.00 ft
Footing Type		
Base Above/Below Soil at Back of Wall	=	0.0 ft
Poisson's Ratio	=	0.300

Axial Load Applied to Stem

Axial Dead Load	=	0.0 lbs
Axial Live Load	=	0.0 lbs
Axial Load Eccentricity	=	0.0 in

*Design Summary

Wall Stability Ratios

Overturning	=	2.49 OK
Sliding	=	1.44 Ratio < 1.5!
Total Bearing Load	=	29,410 lbs
...resultant ecc.	=	15.05 in
Soil Pressure @ Toe	=	3,988 psf OK
Soil Pressure @ Heel	=	914 psf OK
Allowable	=	5,000 psf
Soil Pressure Less Than Allowable		
ACI Factored @ Toe	=	4,314 psf
ACI Factored @ Heel	=	988 psf
Footing Shear @ Toe	=	25.5 psi OK
Footing Shear @ Heel	=	50.6 psi OK
Allowable	=	82.2 psi

Sliding Calcs (Vertical Component NOT Used)

Lateral Sliding Force	=	12,431.3 lbs
less 100% Passive Force	= -	609.2 lbs
less 100% Friction Force	= -	7,231.5 lbs
Added Force Req'd	=	0.0 lbs OK
....for 1.5 : 1 Stability	=	806.2 lbs NG

Load Factors

Building Code	IBC 2003
Dead Load	1.200
Live Load	1.600
Earth, H	1.600
Wind, W	1.600
Seismic, E	1.000

Stem Construction

		Top Stem	2nd	3rd
		Stem OK	Stem OK	Stem OK
Design Height Above Ftg	ft =	13.00	5.00	0.00
Wall Material Above "Ht"	=	Concrete	Concrete	Concrete
Thickness	=	24.00	24.00	24.00
Rebar Size	=	# 7	# 7	# 9
Rebar Spacing	=	15.00	7.50	7.50
Rebar Placed at	=	Edge	Edge	Edge
Design Data				
fb/FB + fa/Fa	=	**0.105**	**0.530**	**0.778**
Total Force @ Section	lbs =	1,999.2	9,180.0	16,309.8
Moment....Actual	ft-# =	4,664.8	45,900.0	108,798.3
Moment.....Allowable	ft-# =	44,340.5	86,641.9	139,872.0
Shear.....Actual	psi =	7.9	36.4	64.7
Shear.....Allowable	psi =	82.2	82.2	82.2
Wall Weight	psf =	300.0	300.0	300.0
Rebar Depth 'd'	in =	21.00	21.00	21.00
LAP SPLICE IF ABOVE	in =	37.38	37.38	48.06
LAP SPLICE IF BELOW	in =	37.38	37.38	
HOOK EMBED INTO FTG	in =			17.25
Masonry Data				
f'm	psi =			
Fs	psi =			
Solid Grouting	=			
Special Inspection	=			
Modular Ratio 'n'	=			
Short Term Factor	=			
Equiv. Solid Thick.	=			
Masonry Block Type =				
Concrete Data				
f'c	psi =	3,000.0	3,000.0	3,000.0
Fy	psi =	60,000.0	60,000.0	60,000.0

Cantilevered Retaining Wall Design

Code: IBC 2003

Footing Design Results

		Toe	Heel
Factored Pressure	=	4,314	988 psf
Mu' : Upward	=	31,553	27,767 ft-#
Mu' : Downward	=	3,864	91,294 ft-#
Mu: Design	=	27,689	63,527 ft-#
Actual 1-Way Shear	=	25.50	50.59 psi
Allow 1-Way Shear	=	82.16	82.16 psi

Toe Reinforcing = # 9 @ 9.00 in
Heel Reinforcing = # 9 @ 12.00 in
Key Reinforcing = # 7 @ 16.00 in

Other Acceptable Sizes & Spacings

Toe: #4@ 4.75 in, #5@ 7.50 in, #6@ 10.50 in, #7@ 14.25 in, #8@ 18.75 in, #9@ 23.
Heel: #4@ 3.25 in, #5@ 4.75 in, #6@ 6.75 in, #7@ 9.25 in, #8@ 12.25 in, #9@ 15.50
Key:

Summary of Overturning & Resisting Forces & Moments

Item		.....OVERTURNING..... Force lbs	Distance ft	Moment ft-#
Heel Active Pressure	=	12,624.1	7.42	93,628.7
Toe Active Pressure	=	-192.8	0.92	-176.8
Surcharge Over Toe	=			
Adjacent Footing Load	=			
Added Lateral Load	=			
Load @ Stem Above Soil	=			
Total	=	12,431.3	**O.T.M.** =	93,451.9

Resisting/Overturning Ratio = **2.49**

Vertical Loads used for Soil Pressure = 29,410.4 lbs

Vertical component of active pressure used for soil pressure

		.....RESISTING..... Force lbs	Distance ft	Moment ft-#
Soil Over Heel	=	15,600.0	9.00	140,400.0
Sloped Soil Over Heel	=			
Surcharge Over Heel	=			
Adjacent Footing Load	=			
Axial Dead Load on Stem	=		0.00	
Soil Over Toe	=	260.0	2.00	520.0
Surcharge Over Toe	=			
Stem Weight(s)	=	6,000.0	5.00	30,000.0
Earth @ Stem Transitions	=			
Footing Weight	=	4,050.0	6.00	24,300.0
Key Weight	=	600.0	5.00	3,000.0
Vert. Component	=	2,900.4	12.00	34,804.9
Total	=	29,410.4 lbs	**R.M.=**	233,024.9

DESIGNER NOTES:

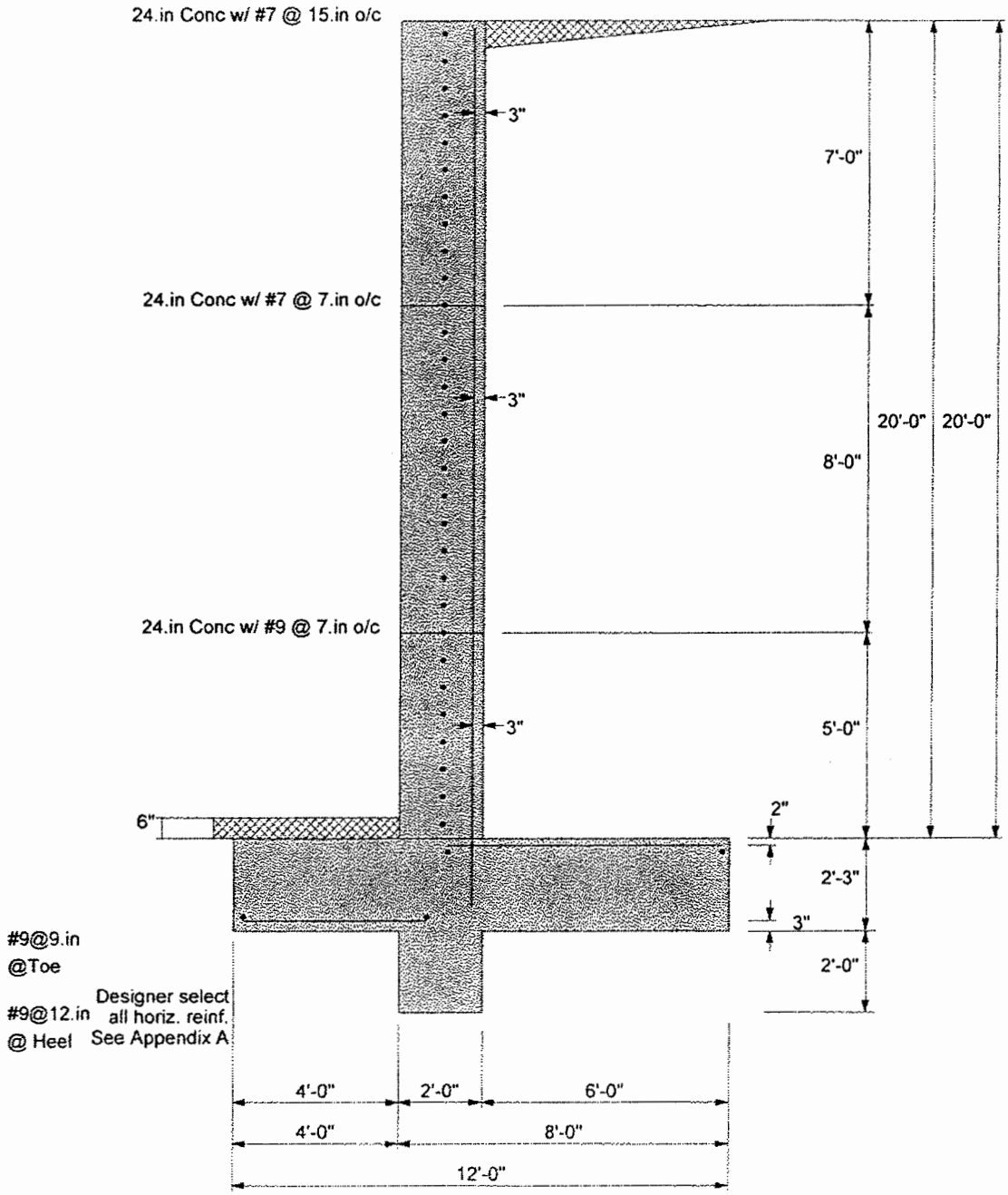
24.in Conc w/ #7 @ 15.in o/c
3"
7'-0"
24.in Conc w/ #7 @ 7.in o/c
3"
20'-0"
20'-0"
8'-0"
24.in Conc w/ #9 @ 7.in o/c
3"
5'-0"
6"
2"
2'-3"
3"
2'-0"
#9@9.in
@Toe
#9@12.in
@ Heel
Designer select
all horiz. reinf.
See Appendix A
4'-0"
2'-0"
6'-0"
4'-0"
8'-0"
12'-0"

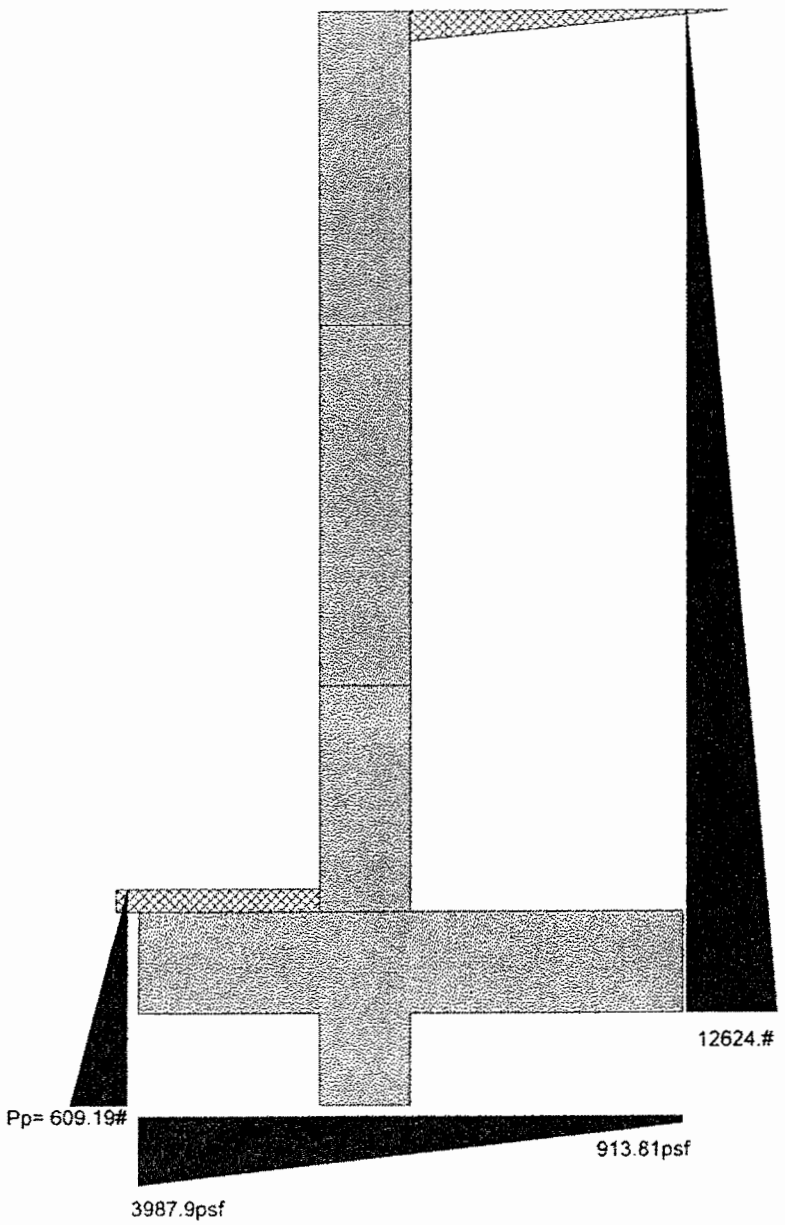
12624.#
Pp= 609.19#
913.81psf
3987.9psf

TCPI
436 Creamery Way, Suite 100
Exton, Pa 19341
Los Alamos Retaining Wall No. 1

Title : Wall "D" H= 20' Seismic
Job # : E-05129 Dsgnr: JJF
Description....
Wall 'D' Height (H) = 20'-0" Seismic Loads EFP = 62pcf

Page: _____
Date: MAY 25,2005

This Wall in File: C:\Program Files\RP2005\los alamos rw.r

Retain Pro 2005 , 7-April-2005, (c) 1989-2005
www.retainpro.com/support for latest release
Registration # : RP-1141385 2005001

Cantilevered Retaining Wall Design

Code: IBC 2003

Criteria

Retained Height	=	20.00 ft
Wall height above soil	=	0.00 ft
Slope Behind Wall	=	0.00 : 1
Height of Soil over Toe	=	6.00 in
Water height over heel	=	0.0 ft
Wind on Stem	=	0.0 psf

Soil Data

Allow Soil Bearing	=	5,000.0 psf
Equivalent Fluid Pressure Method		
Heel Active Pressure	=	62.0 psf/ft
Toe Active Pressure	=	62.0 psf/ft
Passive Pressure	=	54.0 psf/ft
Soil Density	=	130.00 pcf
Footing||Soil Friction	=	0.650
Soil height to ignore for passive pressure	=	0.00 in

Footing Dimensions & Strengths

Toe Width	=	4.00 ft
Heel Width	=	8.00
Total Footing Width	=	12.00
Footing Thickness	=	27.00 in
Key Width	=	24.00 in
Key Depth	=	24.00 in
Key Distance from Toe	=	4.00 ft

f'c = 3,000 psi Fy = 60,000 psi
Footing Concrete Density = 150.00 pcf
Min. As % = 0.0018
Cover @ Top = 2.00 in @ Btm.= 3.00 in

Surcharge Loads

Surcharge Over Heel	=	0.0 psf
Used To Resist Sliding & Overturning		
Surcharge Over Toe	=	0.0 psf
Used for Sliding & Overturning		

Lateral Load Applied to Stem

Lateral Load	=	0.0 #/ft
...Height to Top	=	0.00 ft
...Height to Bottom	=	0.00 ft

Adjacent Footing Load

Adjacent Footing Load	=	0.0 lbs
Footing Width	=	0.00 ft
Eccentricity	=	0.00 in
Wall to Ftg CL Dist	=	0.00 ft
Footing Type		
Base Above/Below Soil at Back of Wall	=	0.0 ft
Poisson's Ratio	=	0.300

Axial Load Applied to Stem

Axial Dead Load	=	0.0 lbs
Axial Live Load	=	0.0 lbs
Axial Load Eccentricity	=	0.0 in

*Design Summary

Wall Stability Ratios

Overturning	=	2.04 OK
Sliding	=	1.18 Ratio < 1.5!
Total Bearing Load	=	29,319 lbs
...resultant ecc.	=	23.57 in
Soil Pressure @ Toe	=	4,843 psf OK
Soil Pressure @ Heel	=	43 psf OK
Allowable	=	5,000 psf
Soil Pressure Less Than Allowable		
ACI Factored @ Toe	=	5,255 psf
ACI Factored @ Heel	=	47 psf
Footing Shear @ Toe	=	31.4 psi OK
Footing Shear @ Heel	=	59.7 psi OK
Allowable	=	82.2 psi

Sliding Calcs (Vertical Component NOT Used)

Lateral Sliding Force	=	15,112.5 lbs
less 100% Passive Force	=	- 609.2 lbs
less 100% Friction Force	=	- 7,231.5 lbs
Added Force Req'd	=	0.0 lbs OK
....for 1.5 : 1 Stability	=	4,828.1 lbs NG

Load Factors

Building Code	IBC 2003
Dead Load	1.200
Live Load	1.600
Earth, H	1.100
Wind, W	1.600
Seismic, E	1.000

Stem Construction

		Top Stem	2nd	3rd
		Stem OK	Stem OK	Stem OK
Design Height Above Ftg	ft =	13.00	5.00	0.00
Wall Material Above "Ht"	=	Concrete	Concrete	Concrete
Thickness	=	24.00	24.00	24.00
Rebar Size	=	# 7	# 7	# 9
Rebar Spacing	=	15.00	7.50	7.50
Rebar Placed at	=	Edge	Edge	Edge
Design Data				
fb/FB + fa/Fa	=	**0.088**	**0.443**	**0.650**
Total Force @ Section	lbs =	1,670.9	7,672.5	13,631.5
Moment....Actual	ft-# =	3,898.8	38,362.5	90,931.9
Moment.....Allowable	ft-# =	44,340.5	86,641.9	139,872.0
Shear.....Actual	psi =	6.6	30.4	54.1
Shear.....Allowable	psi =	82.2	82.2	82.2
Wall Weight	psf =	300.0	300.0	300.0
Rebar Depth 'd'	in =	21.00	21.00	21.00
LAP SPLICE IF ABOVE	in =	37.38	37.38	48.06
LAP SPLICE IF BELOW	in =	37.38	37.38	
HOOK EMBED INTO FTG	in =			17.25
Masonry Data				
f'm	psi =			
Fs	psi =			
Solid Grouting	=			
Special Inspection	=			
Modular Ratio 'n'	=			
Short Term Factor	=			
Equiv. Solid Thick.	=			
Masonry Block Type =				
Concrete Data				
f'c	psi =	3,000.0	3,000.0	3,000.0
Fy	psi =	60,000.0	60,000.0	60,000.0

Retain Pro 2005 , 7-April-2005, (c) 1989-2005
www.retainpro.com/support for latest release
Registration # : RP-1141385 2005001

Cantilevered Retaining Wall Design

Code: IBC 2003

Footing Design Results

		Toe	Heel
Factored Pressure	=	5,255	47 psf
Mu' : Upward	=	37,410	16,472 ft-#
Mu' : Downward	=	3,864	90,416 ft-#
Mu: Design	=	33,546	73,944 ft-#
Actual 1-Way Shear	=	31.39	59.69 psi
Allow 1-Way Shear	=	82.16	82.16 psi
Toe Reinforcing	=	# 5 @ 15.00 in	
Heel Reinforcing	=	# 5 @ 14.00 in	
Key Reinforcing	=	None Spec'd	

Other Acceptable Sizes & Spacings
Toe: #4@ 4.75 in, #5@ 7.50 in, #6@ 10.50 in, #7@ 14.25 in, #8@ 18.75 in, #9@ 23.
Heel: #4@ 2.75 in, #5@ 4.25 in, #6@ 6.00 in, #7@ 8.00 in, #8@ 10.50 in, #9@ 13.25
Key:

Summary of Overturning & Resisting Forces & Moments

Item		.....OVERTURNING..... Force lbs	Distance ft	Moment ft-#
Heel Active Pressure	=	15,346.9	7.42	113,823.1
Toe Active Pressure	=	-234.4	0.92	-214.9
Surcharge Over Toe	=			
Adjacent Footing Load	=			
Added Lateral Load	=			
Load @ Stem Above Soil	=			
Total	=	15,112.5	**O.T.M.** =	113,608.2
Resisting/Overturning Ratio			=	**2.04**

Vertical Loads used for Soil Pressure = 29,319.0 lbs

Vertical component of active pressure used for soil pressure

		.....RESISTING..... Force lbs	Distance ft	Moment ft-#
Soil Over Heel	=	15,600.0	9.00	140,400.0
Sloped Soil Over Heel	=			
Surcharge Over Heel	=			
Adjacent Footing Load	=			
Axial Dead Load on Stem	=		0.00	
Soil Over Toe	=	260.0	2.00	520.0
Surcharge Over Toe	=			
Stem Weight(s)	=	6,000.0	5.00	30,000.0
Earth @ Stem Transitions	=			
Footing Weight	=	4,050.0	6.00	24,300.0
Key Weight	=	600.0	5.00	3,000.0
Vert. Component	=	2,809.0	12.00	33,707.6
	Total =	29,319.0 lbs	**R.M.=**	231,927.6

DESIGNER NOTES:

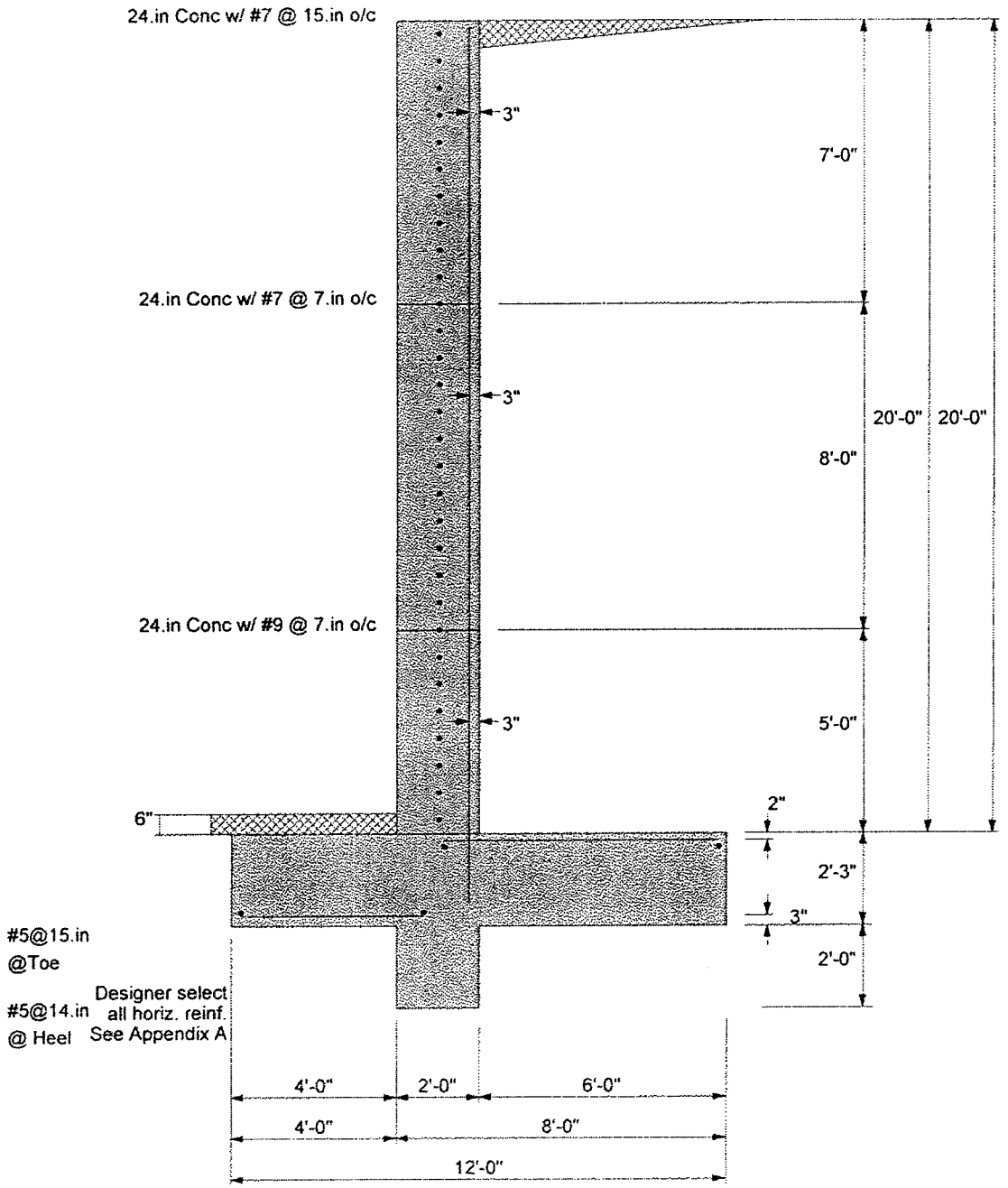
24.in Conc w/ #7 @ 15.in o/c
3"
7'-0"
24.in Conc w/ #7 @ 7.in o/c
3"
20'-0"
20'-0"
8'-0"
24.in Conc w/ #9 @ 7.in o/c
3"
5'-0"
6"
2"
2'-3"
3"
2'-0"
#5@15.in
@Toe
Designer select
all horiz. reinf.
See Appendix A
#5@14.in
@ Heel
4'-0"
2'-0"
6'-0"
4'-0"
8'-0"
12'-0"

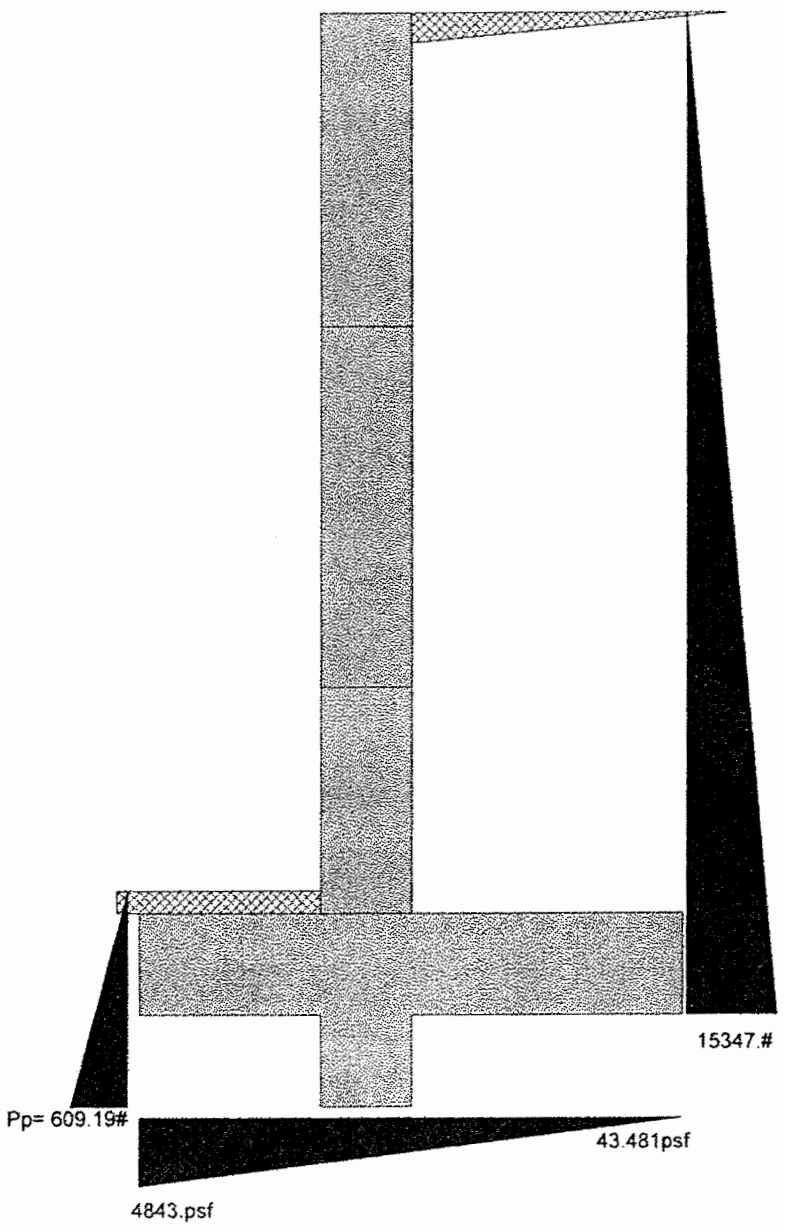
15347.#
Pp= 609.19#
43.481psf
4843.psf

TCPI
436 Creamery Way, Suite 100
Exton, Pa 19341
Los Alamos Retaining Wall No. 1

Title : Wall 'D' H= 20' Equipment Load
Job # : E-05129 Dsgnr: JJF
Description....
Wall "D" Height (H) = 20'-0" withe Equipment Loads

Page: _____
Date: MAY 25,2005

This Wall in File: C:\Program Files\RP2005\los alamos rw.r

Retain Pro 2005 , 7-April-2005, (c) 1989-2005
www.retainpro.com/support for latest release
Registration # : RP-1141385 2005001

Cantilevered Retaining Wall Design

Code: IBC 2003

Criteria

Retained Height	=	20.00 ft
Wall height above soil	=	0.00 ft
Slope Behind Wall	=	0.00 : 1
Height of Soil over Toe	=	6.00 in
Water height over heel	=	0.0 ft
Wind on Stem	=	0.0 psf

Soil Data

Allow Soil Bearing	=	5,000.0 psf
Equivalent Fluid Pressure Method		
Heel Active Pressure	=	46.0 psf/ft
Toe Active Pressure	=	46.0 psf/ft
Passive Pressure	=	54.0 psf/ft
Soil Density	=	130.00 pcf
Footing||Soil Friction	=	0.650
Soil height to ignore for passive pressure	=	0.00 in

Footing Dimensions & Strengths

Toe Width	=	4.00 ft
Heel Width	=	8.00
Total Footing Width	=	12.00
Footing Thickness	=	27.00 in
Key Width	=	24.00 in
Key Depth	=	24.00 in
Key Distance from Toe	=	4.00 ft

f'c = 4,000 psi Fy = 60,000 psi
Footing Concrete Density = 150.00 pcf
Min. As % = 0.0018
Cover @ Top = 2.00 in @ Btm.= 3.00 in

Surcharge Loads

Surcharge Over Heel	=	0.0 psf
Used To Resist Sliding & Overturning		
Surcharge Over Toe	=	0.0 psf
Used for Sliding & Overturning		

Lateral Load Applied to Stem

Lateral Load	=	0.0 #/ft
...Height to Top	=	0.00 ft
...Height to Bottom	=	0.00 ft

Adjacent Footing Load

Adjacent Footing Load	=	2,000.0 lbs
Footing Width	=	8.00 ft
Eccentricity	=	0.00 in
Wall to Ftg CL Dist	=	6.00 ft
Footing Type		
Base Above/Below Soil at Back of Wall	=	0.0 ft
Poisson's Ratio	=	0.300

Axial Load Applied to Stem

Axial Dead Load	=	0.0 lbs
Axial Live Load	=	0.0 lbs
Axial Load Eccentricity	=	0.0 in

*Design Summary

Wall Stability Ratios

Overturning	=	2.03 OK
Sliding	=	1.47 Ratio < 1.5!
Total Bearing Load	=	27,010 lbs
...resultant ecc.	=	26.22 in
Soil Pressure @ Toe	=	4,720 psf OK
Soil Pressure @ Heel	=	0 psf OK
Allowable	=	5,000 psf
Soil Pressure Less Than Allowable		
ACI Factored @ Toe	=	5,699 psf
ACI Factored @ Heel	=	0 psf
Footing Shear @ Toe	=	33.9 psi OK
Footing Shear @ Heel	=	46.8 psi OK
Allowable	=	94.9 psi

Sliding Calcs (Vertical Component NOT Used)

Lateral Sliding Force	=	12,366.4 lbs
less 100% Passive Force	=	- 609.2 lbs
less 100% Friction Force	=	- 17,556.5 lbs
Added Force Req'd	=	0.0 lbs OK
....for 1.5 : 1 Stability	=	383.9 lbs NG

Load Factors

Building Code	IBC 2003
Dead Load	1.200
Live Load	1.600
Earth, H	1.600
Wind, W	1.600
Seismic, E	1.000

Stem Construction

		Top Stem	2nd	3rd
		Stem OK	Stem OK	Stem OK
Design Height Above Ftg	ft =	14.50	5.00	0.00
Wall Material Above "Ht"	=	Concrete	Concrete	Concrete
Thickness	=	24.00	24.00	24.00
Rebar Size	=	# 7	# 7	# 9
Rebar Spacing	=	15.00	7.50	7.50
Rebar Placed at	=	Edge	Edge	Edge
Design Data				
fb/FB + fa/Fa	=	**0.067**	**0.616**	**0.848**
Total Force @ Section	lbs =	1,649.3	9,875.3	16,504.0
Moment....Actual	ft-# =	2,966.1	53,400.5	118,668.4
Moment.....Allowable	ft-# =	44,340.5	86,641.9	139,872.0
Shear.....Actual	psi =	6.5	39.2	65.5
Shear.....Allowable	psi =	82.2	82.2	82.2
Wall Weight	psf =	300.0	300.0	300.0
Rebar Depth 'd'	in =	21.00	21.00	21.00
LAP SPLICE IF ABOVE	in =	37.38	37.38	48.06
LAP SPLICE IF BELOW	in =	37.38	37.38	
HOOK EMBED INTO FTG	in =			14.94
Masonry Data				
f'm	psi =			
Fs	psi =			
Solid Grouting	=			
Special Inspection	=			
Modular Ratio 'n'	=			
Short Term Factor	=			
Equiv. Solid Thick.	=			
Masonry Block Type =				
Concrete Data				
f'c	psi =	3,000.0	3,000.0	3,000.0
Fy	psi =	60,000.0	60,000.0	60,000.0

TCPI
436 Creamery Way, Suite 100
Exton, Pa 19341
Los Alamos Retaining Wall No. 1

Title : Wall 'D' H= 20' Equipment Load
Job # : E-05129 Dsgnr: JJF
Description....
Wall "D" Height (H) = 20'-0" withe Equipment Loads

Page: _____
Date: MAY 25,2005

This Wall in File: C:\Program Files\RP2005\los alamos rw.rp

Retain Pro 2005 , 7-April-2005, (c) 1989-2005
www.retainpro.com/support for latest release
Registration # : RP-1141385 2005001

Cantilevered Retaining Wall Design

Code: IBC 2003

Footing Design Results

		Toe	Heel
Factored Pressure	=	5,699	0 psf
Mu' : Upward	=	40,283	13,392 ft-#
Mu' : Downward	=	3,864	63,450 ft-#
Mu: Design	=	36,419	50,058 ft-#
Actual 1-Way Shear	=	33.90	46.84 psi
Allow 1-Way Shear	=	94.87	94.87 psi

Toe Reinforcing = # 9 @ 9.00 in
Heel Reinforcing = # 9 @ 12.00 in
Key Reinforcing = # 7 @ 16.00 in

Other Acceptable Sizes & Spacings
Toe: #4@ 4.75 in, #5@ 7.50 in, #6@ 10.50 in, #7@ 14.25 in, #8@ 18.75 in, #9@ 23.
Heel: #4@ 4.00 in, #5@ 6.25 in, #6@ 8.75 in, #7@ 12.00 in, #8@ 15.50 in, #9@ 19.7
Key:

Summary of Overturning & Resisting Forces & Moments

Item		.....OVERTURNING..... Force lbs	Distance ft	Moment ft-#
Heel Active Pressure	=	11,386.4	7.42	84,449.4
Toe Active Pressure	=	-173.9	0.92	-159.4
Surcharge Over Toe	=			
Adjacent Footing Load	=	1,153.9	13.34	15,396.6
Added Lateral Load	=			
Load @ Stem Above Soil	=			
Total	=	12,366.4	**O.T.M.** =	99,686.5

Resisting/Overturning Ratio = **2.03**

Vertical Loads used for Soil Pressure = 27,010.0 lbs

Vertical component of active pressure NOT used for soil pressure

		.....RESISTING..... Force lbs	Distance ft	Moment ft-#
Soil Over Heel	=	15,600.0	9.00	140,400.0
Sloped Soil Over Heel	=			
Surcharge Over Heel	=			
Adjacent Footing Load	=	500.0	9.00	4,500.0
Axial Dead Load on Stem	=		0.00	
Soil Over Toe	=	260.0	2.00	520.0
Surcharge Over Toe	=			
Stem Weight(s)	=	6,000.0	5.00	30,000.0
Earth @ Stem Transitions	=			
Footing Weight	=	4,050.0	6.00	24,300.0
Key Weight	=	600.0	5.00	3,000.0
Vert. Component	=			
Total =		27,010.0 lbs	**R.M.=**	202,720.0

DESIGNER NOTES:

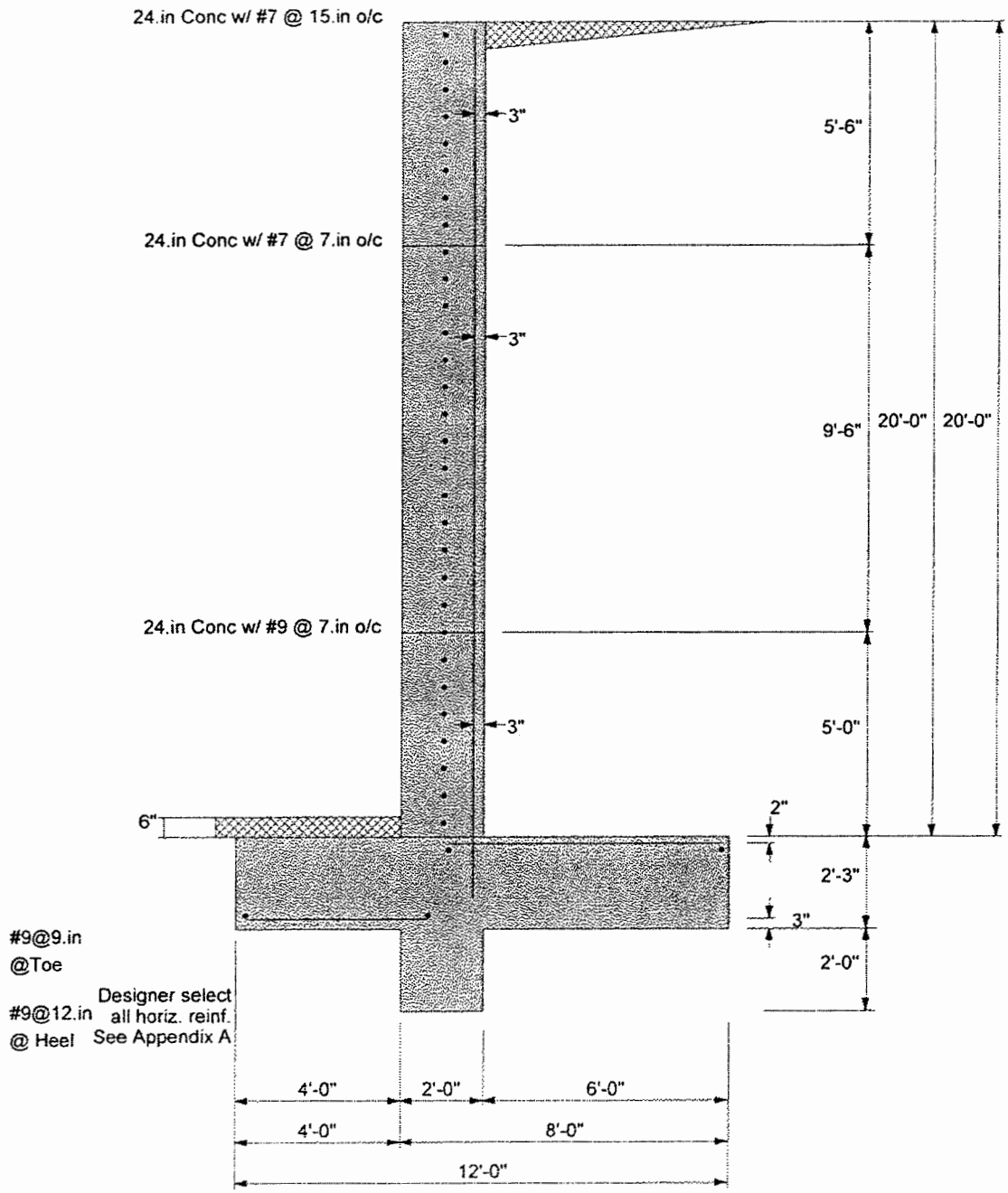
24.in Conc w/ #7 @ 15.in o/c
3"
5'-6"
24.in Conc w/ #7 @ 7.in o/c
3"
9'-6"
20'-0"
20'-0"
24.in Conc w/ #9 @ 7.in o/c
3"
5'-0"
6"
2"
2'-3"
3"
2'-0"
#9@9.in
@Toe
#9@12.in
@ Heel
Designer select
all horiz. reinf.
See Appendix A
4'-0"
2'-0"
6'-0"
4'-0"
8'-0"
12'-0"

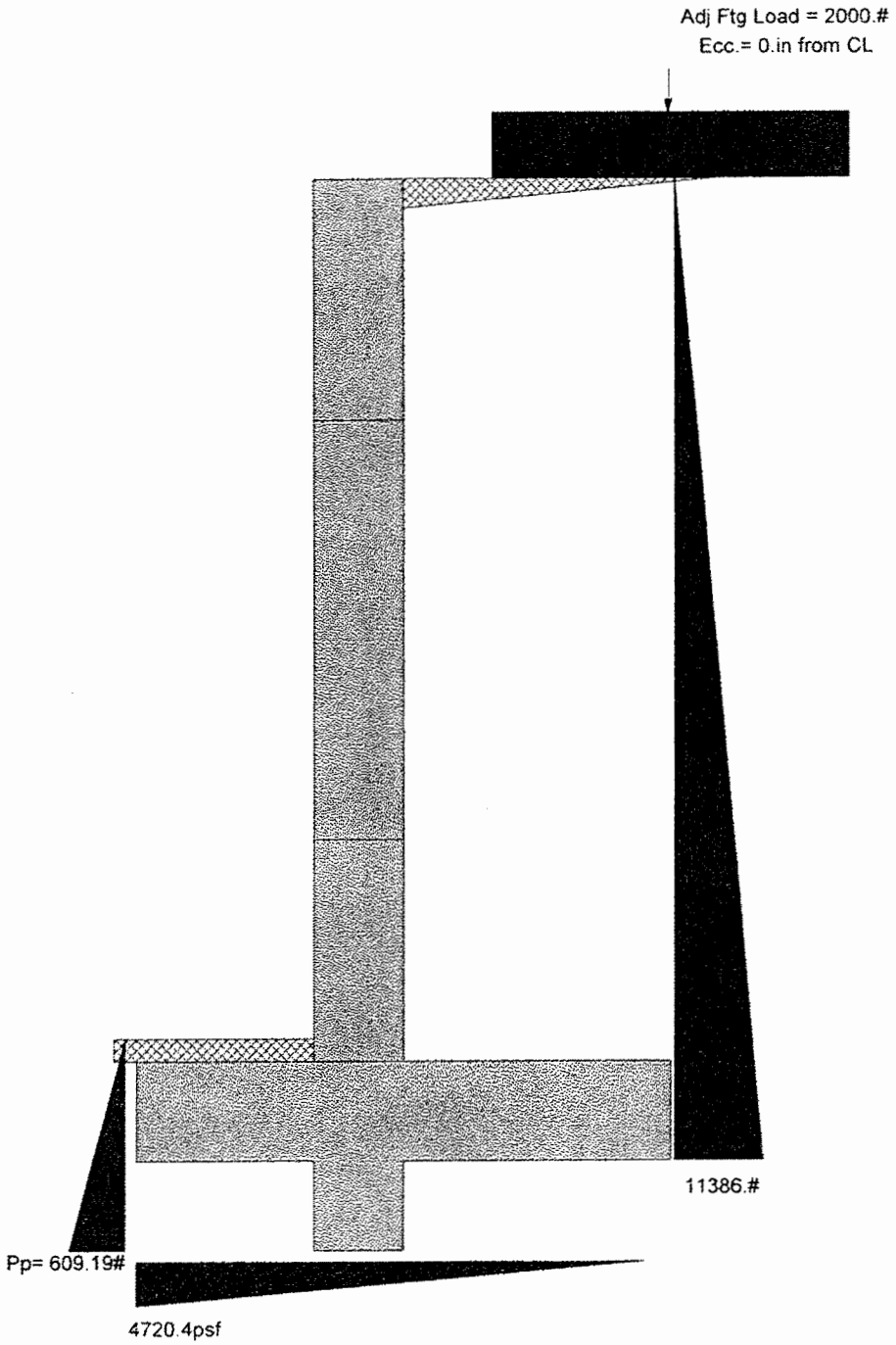
Adj Ftg Load = 2000.#
Ecc.= 0.in from CL
11386.#
Pp= 609.19#
4720.4psf

WALL Mark 'D' Seismic Loads

Definitions:

B = Width of Toe (feet)
C = Width of Heel (feet)
W = Width of Base (feet)
γ = density of backfill (pcf)
$\gamma_{concrete}$ density = 150 pcf
EFP_{static} = Design equivalent fluid pressure (pcf), static condition.
EFP_{AE} = Design equivalent fluid pressure (pcf), Active Earth pressure under seismic conditions..
ϕ = Internial angle of friction of the soil.
δ = Friction angle of soil to concrete wall.
K_h = Alternate seismic force developed from the Geotechnical Calculations page 12 in Appendix 'B'

h wall = Height of Wall over base (feet)
t_{base} = thickness of Base (feet)
t_{stem} = Thickness of Stem (feet)

Wall Mk. 'D' Data:

$B := 4.0$ (feet) $h_{wall} := 20.0$ (feet) $t_{stem} := 2.00$ (feet)

$C := 6.0$ (feet) $W := 12$ (feet) $t_{base} := 2.25$ (feet)

Soil Data: $\gamma := 130$ (pcf) $\delta := 22 \cdot deg$ $\phi := 32 \cdot deg$

$EFP_{static} := 46$ (pcf)

$EFP_{AE} := 62$ (pcf)

$K_h := 0.09$

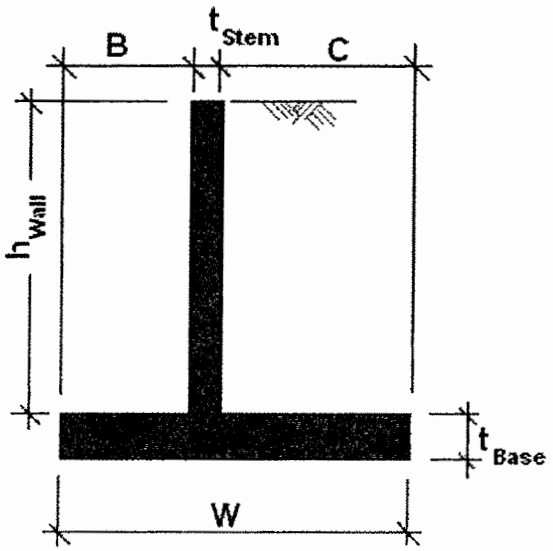

WALL STABILITY ANALYSIS

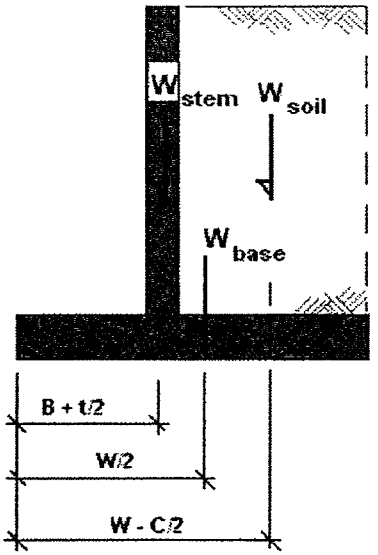

Weights: (kips.per foot)

$W_{stem} := (0.150) \cdot h_{wall} \cdot t_{stem}$ $W_{stem} = 6.000$

$W_{base} := (0.150) \cdot W \cdot t_{base}$ $W_{base} = 4.05$

$W_{soil} := \frac{\gamma \cdot h_{wall} \cdot C}{1000}$ $W_{soil} = 15.6$

$H := h_{wall} + t_{base}$ $H = 22.25$ (feet)

Stabilizing Forces

Driving Forces:

$P_{ST} := \frac{(EFP_{static}) \cdot \frac{1}{2} \cdot (H)^2}{1000}$ $P_{ST} = 11.386$ (kips)

$P_{SE} := \frac{(EFP_{AE}) \cdot \frac{1}{2} \cdot (H)^2}{1000}$ $P_{SE} = 15.347$ (kips)

$\Delta P_1 := P_{SE} - P_{ST}$ $\Delta P_1 = 3.96$ (kips)

$\Delta P_2 := \frac{K_h \cdot \gamma \cdot (H)^2}{1000}$ $\Delta P_2 = 5.792$ (kips)

The larger value of either ΔP_1 or ΔP_2 is to be used in the seismic analysis

Let: $\Delta := \begin{pmatrix} \Delta P_1 \\ \Delta P_2 \end{pmatrix}$ $\Delta P := \max(\Delta)$ $\Delta P = 5.792$ (kips)

Driving Forces and Moments about the Toe:

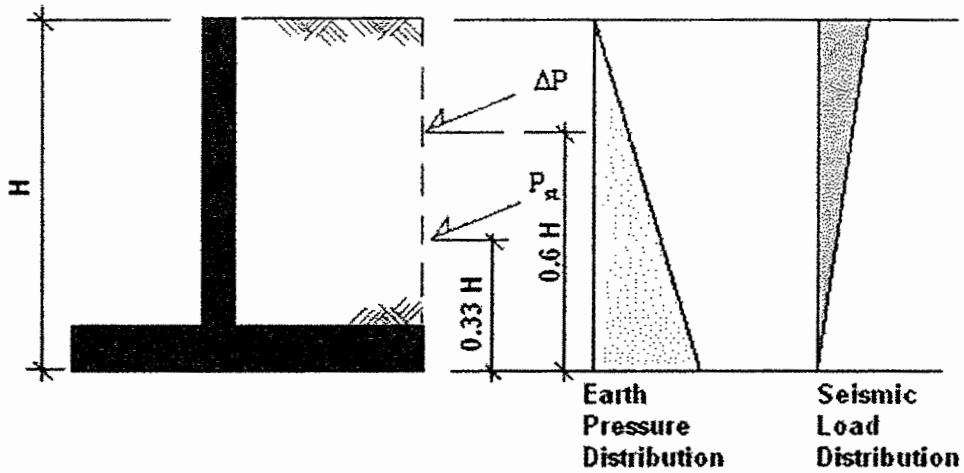

Horizontal Driving Force (**HDF**) is the sum of P_{st} and ΔP in the horizontal direction:

$HDF := (P_{ST} + \Delta P)\cdot\cos(\delta)$ $\quad HDF = 15.928$ (kips)

Driving Moment ($\mathbf{M_d}$) is the sum of the driving moments about the Toe.

$M_d := (P_{ST}\cdot 0.333\cdot H)\cdot\cos(\delta) + (\Delta P\cdot 0.6\cdot H)\cdot\cos(\delta)$ $\quad M_d = 149.918$ (ft-kips)

Resisting Forces and Moments about the Toe:

Resisting Forces (**RF**) neglecting passive pressure, a conservative analysis:

$RF := \tan(\phi)(W_{stem} + W_{base} + W_{soil} + P_{ST}\cdot\sin(\delta) + \Delta P\cdot\sin(\delta))$

$RF = 20.049$ (kips)

"Factor of Safety" against sliding is the ratio of **RF** to **HDF**

$Ratio_{sliding} := \frac{RF}{HDF}$ $\quad Ratio_{sliding} = 1.259$

Resisting Moments about the Toe M_r :

$$M_r := W_{stem}\cdot(B + t_{stem}) + W_{base}\cdot\left(\frac{W}{2}\right) + W_{soil}\cdot\left(W - \frac{C}{2}\right) + (P_{ST} + \Delta P)\cdot W\cdot\sin(\delta)$$

$M_r = 277.923$ (ft-kips)

"Factor of Safety" against overturning the ratio of M_r to M_d

$$Ratio_{OT} := \frac{M_r}{M_d} \qquad Ratio_{OT} = 1.854$$

Calculate Soil Bearing Pressurs:

Net Moment: $\Delta M := M_r - M_d$ $\quad \Delta M = 128.005$ (ft-kips)

$$X := \frac{\Delta M}{(W_{stem} + W_{base} + W_{soil} + P_{ST}\cdot\sin(\delta) + \Delta P\cdot\sin(\delta))} \qquad X = 3.99 \quad \text{(feet)}$$

$$R := (W_{stem} + W_{base} + W_{soil} + P_{ST}\cdot\sin(\delta) + \Delta P\cdot\sin(\delta)) \qquad R = 32.085 \quad \text{(kips)}$$

Eccentricity (e): $e := \frac{W}{2} - X$ $\quad e = 2.01$ (feet) $\quad \frac{W}{6} = 2$ (feet)

$$Eccentricity := \begin{cases} \text{"OK Within Middle Third"} & \text{if } e \le \frac{W}{6} \\ \text{"Non in Middle one-third"} & \text{otherwise} \end{cases}$$

Eccentricity = "Non in Middle one-third"

$$SP_2 := \frac{2R}{3\cdot(1.0)\cdot\left(\frac{W}{2} - e\right)} \qquad SP_2 = 5.362$$

Maximum Soil Pearing Pressure (kips/ft^2)

$SP_1 := 0.0$ $\quad SP_1 = 0$

Minimum Soil Pearing Pressure (kips/ft^2)

Effective Soil Bearing Width (W') :

$$W' := 3\cdot\left(\frac{W}{2} - e\right) \qquad W' = 11.969$$

Concrete Design:

The design on the concrete elements will be in accordance with ACI 318-02.

See Section 9.2 of ACI 319-02

$U_{DL} := 1.2 \qquad U_H := 1.6 \qquad U_E := 1.0$

$$R_{ult} := \left(U_{DL} \cdot W_{stem} + U_{DL} \cdot W_{base} + U_E \cdot W_{soil} + U_E \cdot P_{ST} \cdot \sin(\delta) + U_E \cdot \Delta P \cdot \sin(\delta)\right)$$

$$M_{d_ult} := U_E \cdot \left[\left(P_{ST} \cdot 0.333 \cdot H\right) \cdot \cos(\delta) + \left(\Delta P \cdot 0.6 \cdot H\right) \cdot \cos(\delta)\right]$$

$$M_{r_ult_1} := U_{DL} \cdot W_{stem} \cdot \left(B + t_{stem}\right) + U_{DL} \cdot W_{base} \cdot \left(\frac{W}{2}\right) + U_{DL} \cdot W_{soil} \cdot \left(W - \frac{C}{2}\right)$$

$$M_{r_ult_2} := U_{DL} \cdot \left[\left(P_{ST} + \Delta P\right) \cdot W \cdot \sin(\delta)\right]$$

$$M_{r_ult} := M_{r_ult_1} + M_{r_ult_2}$$

Net Ultimate Moment: $\Delta M_{ult} := M_{r_ult} - M_{d_ult} \qquad \Delta M_{ult} = 183.59$ (ft-kips)

$X_{ult} := \dfrac{\Delta M_{ult}}{\left(R_{ult}\right)} \qquad X_{ult} = 5.385$ (feet)

$R_{ult} = 34.095$ (kips)

Eccentricity (e): $e_{ult} := \dfrac{W}{2} - X_{ult} \qquad e_{ult} = 0.615$ (feet) $\qquad \dfrac{W}{6} = 2$ (feet)

$$\text{Eccentricity} := \begin{cases} \text{"OK Within Middle Third"} & \text{if } e_{ult} \le \dfrac{W}{6} \\ \text{"Non in Middle one-third"} & \text{otherwise} \end{cases}$$

Eccentricity = "OK Within Middle Third"

$SP_{2_ult} := \dfrac{R_{ult}}{W} \cdot \left(1 + \dfrac{e_{ult}}{W}\right) \qquad SP_{2_ult} = 2.987$ Maximum Soil Pearing Pressure (kips/ft^2)

$SP_{1_ult} := \frac{R_{ult}}{W} \cdot \left(1 - \frac{e_{ult}}{W}\right)$ $SP_{1_ult} = 2.696$ Minimum Soil Pearing Pressure (kips/ft²)

$\Delta SP_{ult} := SP_{2_ult} - SP_{1_ult}$ $\Delta SP_{ult} = 0.291$ (kips/ft²)

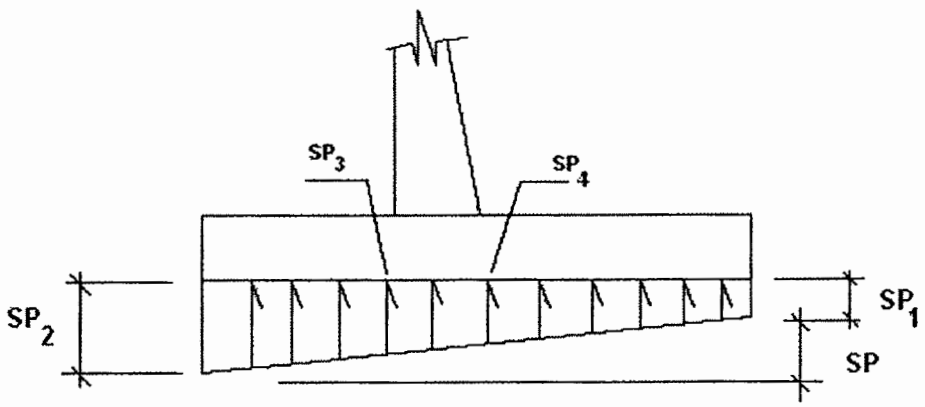

Pressure Diagram - Toe & Heel

Soil Pressure at Front Face of Stem:

$SP_{3_ult} := SP_{2_ult} - \frac{\Delta SP_{ult}}{W} \cdot (B)$ $SP_{3_ult} = 2.89$ (ksf)

Soil Pressure at Rear Face of Stem:

$SP_{4_ult} := SP_{2_ult} - \frac{\Delta SP_{ult}}{W} \cdot (B + t_{stem})$ $SP_{4_ult} = 2.841$ (ksf)

Moment at Front Face of Stem:

$$M_{toe} := SP_{3_ult} \cdot \frac{B^2}{2} + (SP_{2_ult} - SP_{3_ult}) \cdot \frac{(B)}{2} \cdot \left(\frac{2}{3}\right) \cdot B - U_{DL} \cdot (0.150) \cdot t_{base} \cdot \left(\frac{B^2}{2}\right)$$

$M_{toe} = 20.397$ (ft-kips)

Concrete Data:

$f'_c := 3$ ksi $\quad f_y := 60$ ksi $\quad M_u := M_{toe}$ ft-kips

$b := 12$ inches $\quad d := (12)\cdot t_{base} - 4 \quad d = 23$ inches $\quad \phi_f := 0.90$

A_s calculation is from CRSI Handbook

$$A_{s_required} := \frac{1.7\cdot f'_c\cdot b\cdot d}{2\cdot f_y} - \frac{1}{2}\cdot\sqrt{\frac{2.89\cdot(f'_c\cdot b\cdot d)^2}{(f_y)^2} - \frac{6.8\cdot f'_c\cdot b\cdot M_u\cdot 12}{\phi_f\cdot(f_y)^2}}$$

$A_{s_required} = 0.199$ Inches^2 $\quad \rho := \frac{A_{s_required}}{12\cdot d} \quad \rho = 0.0007$

Shear in Toe:

Soil Pressure at d from front face:

$$SP_{31_ult} := SP_{2_ult} - \frac{\Delta SP_{ult}}{W}\cdot\left(B - \frac{d}{12}\right) \quad SP_{31_ult} = 2.936 \quad \text{(ksf)}$$

$$V_{toe} := SP_{31_ult}\cdot\left(B - \frac{d}{12}\right) + (SP_{2_ult} - SP_{31_ult})\cdot\left(\frac{1}{2}\right)\cdot\left(B - \frac{d}{12}\right)$$

$V_{toe} = 6.17$ (kips/foot)

$$\phi V_n := \frac{0.75\cdot 12\cdot d\cdot(2)\cdot\sqrt{f'_c\cdot 1000}}{1000} \quad \phi V_n = 22.676 \quad \text{(kips/foot)}$$

Moment at Rear Face of Stem in the Heel:

$$M_{heel} := SP_{1_ult}\cdot\frac{C^2}{2} + (SP_{4_ult} - SP_{1_ult})\cdot\frac{(C)}{2}\cdot\left(\frac{1}{3}\right)\cdot C - U_{DL}\cdot(0.150)\cdot t_{base}\cdot\left(\frac{C^2}{2}\right)$$

$M_{heel} = 42.104$ (ft-kips) $\quad$ Let: $\quad M_u := M_{heel}$

A_s calculation is from CRSI Handbook

$$A_{s_required} := \frac{1.7 \cdot f'_c \cdot b \cdot d}{2 \cdot f_y} - \frac{1}{2} \cdot \sqrt{\frac{2.89 \cdot (f'_c \cdot b \cdot d)^2}{(f_y)^2} - \frac{6.8 \cdot f'_c \cdot b \cdot M_u \cdot 12}{\phi f \cdot (f_y)^2}}$$

$A_{s_required} = 0.414$ Inches^2 $\rho := \frac{A_{s_required}}{12 \cdot d}$ $\rho = 0.0015$

Shear in Hell:

Soil Pressure at d from front rear face of stem:

$$SP_{41_ult} := SP_{1_ult} + \frac{\Delta SP_{ult}}{W} \cdot \left(C - \frac{d}{12}\right) \quad SP_{41_ult} = 2.795 \quad \text{(ksf)}$$

$$V_{heel} := SP_{1_ult} \cdot \left(C - \frac{d}{12}\right) + (SP_{41_ult} - SP_{1_ult}) \cdot \left(\frac{1}{2}\right) \cdot \left(C - \frac{d}{12}\right)$$

$V_{heel} = 11.209$ (kips/foot)

$$\phi V_n := \frac{0.75 \cdot 12 \cdot d \cdot (2) \cdot \sqrt{f'_c \cdot 1000}}{1000} \quad \phi V_n = 22.676 \quad \text{(kips/foot)}$$

Moments in Stem:

Driving Forces:

$$P_{ST} := \frac{(EFP_{static}) \cdot \frac{1}{2} \cdot (h_{wall})^2}{1000} \quad P_{ST} = 9.2 \quad \text{(kips)}$$

$$P_{SE} := \frac{(EFP_{AE}) \cdot \frac{1}{2} \cdot (h_{wall})^2}{1000} \quad P_{SE} = 12.4 \quad \text{(kips)}$$

$\Delta P_1 := P_{SE} - P_{ST}$ $\Delta P_1 = 3.2$ (kips)

$$\Delta P_2 := \frac{K_h \cdot \gamma \cdot (h_{wall})^2}{1000} \qquad \Delta P_2 = 4.68 \qquad \text{(kips)}$$

The larger value of either ΔP_1 or ΔP_2 is to be used in the seismic analysis

Let: $\Delta := \begin{pmatrix} \Delta P_1 \\ \Delta P_2 \end{pmatrix}$ $\qquad \Delta P := \max(\Delta) \qquad \Delta P = 4.68 \qquad$ (kips)

$$M_{stem} := U_E \cdot \left[\left(P_{ST} \cdot \cos(\delta) \cdot 0.333 h_{wall} \right) + \left(\Delta P \cdot 0.600 \cdot h_{wall} \right) \right]$$

$M_{stem} = 112.97$ (ft-kips) Let: $M_u := M_{stem}$ $\qquad d := (12) \cdot t_{stem} - 3.0$

$d = 21$ (inches)

A_s calculation is from CRSI Handbook

$$A_{s_required} := \frac{1.7 \cdot f'_c \cdot b \cdot d}{2 \cdot f_y} - \frac{1}{2} \cdot \sqrt{\frac{2.89 \cdot (f'_c \cdot b \cdot d)^2}{(f_y)^2} - \frac{6.8 \cdot f'_c \cdot b \cdot M_u \cdot 12}{\phi_f \cdot (f_y)^2}}$$

$A_{s_required} = 1.271$ Inches^2 $\qquad \rho := \frac{A_{s_required}}{12 \cdot d} \qquad \rho = 0.0050$

WALL MK. 'E'

Loading Case	Overturning Ratio	Sliding Ratio	Maximum Soil Bearing Pressure	Controlling Case for Strength Design	Remarks
Normal	2.70	1.40	4181		
Seismic 1	2.21	1.15	4700		
Compaction Equipment	2.27	1.46	4520	X	
Seismic 2	2.41	1.26	3300		

TCPI
436 Creamery Way, Suite 100
Exton, Pa 19341
Los Alamos Retaining Wall No. 1

Title : Wall "E" H = 24' Normal
Job # : E-05129 Dsgnr: JJF
Description....
Wall "E" Height 'H' = 24'-0" Normal loads EFP = 51pcf

Page: _____
Date: MAY 24,2005

This Wall in File: C:\Program Files\RP2005\los alamos rw.r

Retain Pro 2005 , 7-April-2005, (c) 1989-2005
www.retainpro.com/support for latest release
Registration # : RP-1141385 2005001

Cantilevered Retaining Wall Design

Code: IBC 2003

Criteria

Retained Height	=	24.00 ft
Wall height above soil	=	0.00 ft
Slope Behind Wall	=	0.00 : 1
Height of Soil over Toe	=	0.00 in
Water height over heel	=	0.0 ft
Wind on Stem	=	0.0 psf

Soil Data

Allow Soil Bearing	=	4,000.0 psf
Equivalent Fluid Pressure Method		
Heel Active Pressure	=	51.0 psf/ft
Toe Active Pressure	=	51.0 psf/ft
Passive Pressure	=	54.0 psf/ft
Soil Density	=	130.00 pcf
Footing||Soil Friction	=	0.650
Soil height to ignore for passive pressure	=	0.00 in

Footing Dimensions & Strengths

Toe Width	=	5.50 ft
Heel Width	=	9.50
Total Footing Width	=	15.00
Footing Thickness	=	27.00 in
Key Width	=	30.00 in
Key Depth	=	24.00 in
Key Distance from Toe	=	5.50 ft

f'c = 3,000 psi Fy = 60,000 psi
Footing Concrete Density = 150.00 pcf
Min. As % = 0.0018
Cover @ Top = 2.00 in @ Btm.= 3.00 in

Surcharge Loads

Surcharge Over Heel	=	0.0 psf
Used To Resist Sliding & Overturning		
Surcharge Over Toe	=	0.0 psf
Used for Sliding & Overturning		

Lateral Load Applied to Stem

Lateral Load	=	0.0 #/ft
...Height to Top	=	0.00 ft
...Height to Bottom	=	0.00 ft

Adjacent Footing Load

Adjacent Footing Load	=	0.0 lbs
Footing Width	=	0.00 ft
Eccentricity	=	0.00 in
Wall to Ftg CL Dist	=	0.00 ft
Footing Type		
Base Above/Below Soil at Back of Wall	=	0.0 ft
Poisson's Ratio	=	0.300

Axial Load Applied to Stem

Axial Dead Load	=	0.0 lbs
Axial Live Load	=	0.0 lbs
Axial Load Eccentricity	=	0.0 in

*Design Summary

Wall Stability Ratios

Overturning	=	2.70 OK
Sliding	=	1.39 Ratio < 1.5!
Total Bearing Load	=	40,689 lbs
...resultant ecc.	=	12.78 in
Soil Pressure @ Toe	=	3,868 psf OK
Soil Pressure @ Heel	=	1,557 psf OK
Allowable	=	4,000 psf
Soil Pressure Less Than Allowable		
ACI Factored @ Toe	=	4,181 psf
ACI Factored @ Heel	=	1,683 psf
Footing Shear @ Toe	=	43.7 psi OK
Footing Shear @ Heel	=	66.8 psi OK
Allowable	=	82.2 psi

Sliding Calcs (Vertical Component NOT Used)

Lateral Sliding Force	=	17,442.0 lbs
less 100% Passive Force	=	- 487.7 lbs
less 100% Friction Force	=	- 13,824.1 lbs
Added Force Req'd	=	0.0 lbs OK
....for 1.5 : 1 Stability	=	1,851.2 lbs NG

Load Factors

Building Code	IBC 2003
Dead Load	1.200
Live Load	1.600
Earth, H	1.600
Wind, W	1.600
Seismic, E	1.000

Stem Construction

		Top Stem	2nd	3rd	4th
		Stem OK	Stem OK	Stem OK	Stem OK
Design Height Above Ftg	ft =	20.00	13.00	5.00	0.00
Wall Material Above "Ht"	=	Concrete	Concrete	Concrete	Concrete
Thickness	=	30.00	30.00	30.00	30.00
Rebar Size	=	# 5	# 5	# 7	# 9
Rebar Spacing	=	12.00	6.00	6.00	6.00
Rebar Placed at	=	Edge	Edge	Edge	Edge
Design Data					
fb/FB + fa/Fa	=	**0.023**	**0.246**	**0.669**	**0.820**
Total Force @ Section	lbs =	652.8	4,936.8	14,728.8	23,500.8
Moment....Actual	ft-# =	870.4	18,101.6	93,282.4	188,006.4
Moment.....Allowable	ft-# =	37,239.8	73,629.0	139,428.0	229,237.5
Shear.....Actual	psi =	2.0	15.2	45.5	71.4
Shear.....Allowable	psi =	82.2	82.2	82.2	82.2
Wall Weight	psf =	375.0	375.0	375.0	375.0
Rebar Depth 'd'	in =	27.00	27.00	27.00	27.44
LAP SPLICE IF ABOVE	in =	21.36	21.36	37.38	48.06
LAP SPLICE IF BELOW	in =	21.36	21.36	37.38	
HOOK EMBED INTO FTG	in =				17.25
Masonry Data					
f'm	psi =				
Fs	psi =				
Solid Grouting	=				
Special Inspection	=				
Modular Ratio 'n'	=				
Short Term Factor	=				
Equiv. Solid Thick.	=				
Masonry Block Type	=				
Concrete Data					
f'c	psi =	3,000.0	3,000.0	3,000.0	3,000.0
Fy	psi =	60,000.0	60,000.0	60,000.0	60,000.0

Cantilevered Retaining Wall Design

Code: IBC 2003

Footing Design Results

		Toe	Heel
Factored Pressure	=	4,181	1,683 psf
Mu' : Upward	=	58,621	50,761 ft-#
Mu' : Downward	=	6,126	146,865 ft-#
Mu: Design	=	52,496	96,104 ft-#
Actual 1-Way Shear	=	43.72	66.80 psi
Allow 1-Way Shear	=	82.16	82.16 psi
Toe Reinforcing	=	# 9 @ 12.00 in	
Heel Reinforcing	=	# 9 @ 12.25 in	
Key Reinforcing	=	# 7 @ 12.50 in	

Other Acceptable Sizes & Spacings

Toe: #4@ 3.75 in, #5@ 5.75 in, #6@ 8.00 in, #7@ 10.75 in, #8@ 14.25 in, #9@ 18.0
Heel: #4@ 2.50 in, #5@ 4.00 in, #6@ 5.50 in, #7@ 7.50 in, #8@ 9.75 in, #9@ 12.25
Key:

Summary of Overturning & Resisting Forces & Moments

Item		.....OVERTURNING..... Force lbs	Distance ft	Moment ft-#
Heel Active Pressure	=	17,571.1	8.75	153,747.1
Toe Active Pressure	=	-129.1	0.75	-96.8
Surcharge Over Toe	=			
Adjacent Footing Load	=			
Added Lateral Load	=			
Load @ Stem Above Soil	=			
Total	=	17,442.0	**O.T.M.** =	153,650.3
Resisting/Overturning Ratio			=	**2.70**

Vertical Loads used for Soil Pressure = 40,689.5 lbs

Vertical component of active pressure used for soil pressure

		.....RESISTING..... Force lbs	Distance ft	Moment ft-#
Soil Over Heel	=	21,840.0	11.50	251,160.0
Sloped Soil Over Heel	=			
Surcharge Over Heel	=			
Adjacent Footing Load	=			
Axial Dead Load on Stem	=		0.00	
Soil Over Toe	=			
Surcharge Over Toe	=			
Stem Weight(s)	=	9,000.0	6.75	60,750.0
Earth @ Stem Transitions	=			
Footing Weight	=	5,062.5	7.50	37,968.8
Key Weight	=	750.0	6.75	5,062.5
Vert. Component	=	4,037.0	15.00	60,554.9
Total =		40,689.5 lbs	**R.M.=**	415,496.2

DESIGNER NOTES:

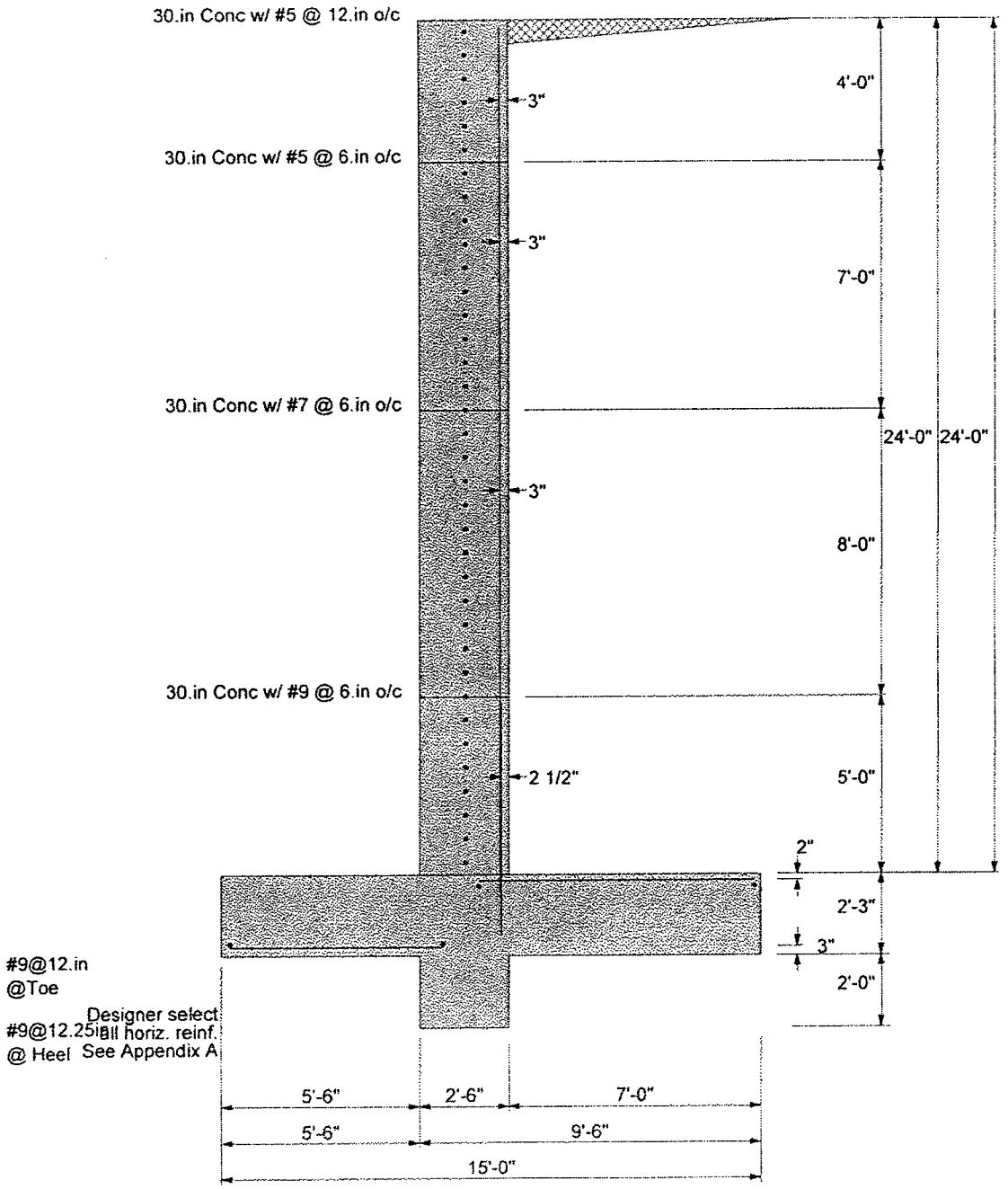
30.in Conc w/ #5 @ 12.in o/c
30.in Conc w/ #5 @ 6.in o/c
30.in Conc w/ #7 @ 6.in o/c
30.in Conc w/ #9 @ 6.in o/c
3"
3"
3"
2 1/2"
4'-0"
7'-0"
8'-0"
5'-0"
24'-0"
24'-0"
2"
2'-3"
3"
2'-0"
#9@12.in
@Toe
#9@12.25in
@ Heel
Designer select
all horiz. reinf.
See Appendix A
5'-6"
2'-6"
7'-0"
5'-6"
9'-6"
15'-0"

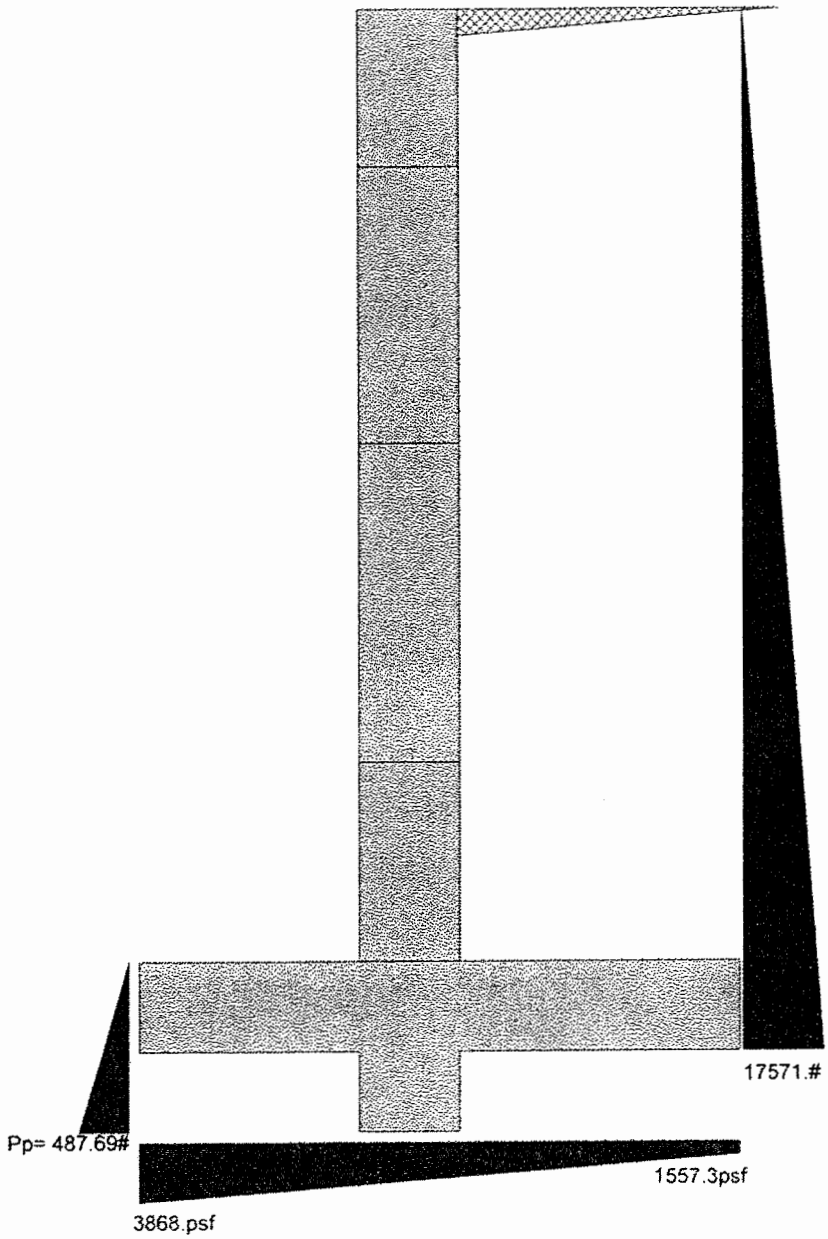
17571.#
Pp= 487.69#
1557.3psf
3868.psf

TCPI
436 Creamery Way, Suite 100
Exton, Pa 19341
Los Alamos Retaining Wall No. 1

Title : Wall 'E' H= 24 Seismic
Job # : E-05129 Dsgnr: JJF
Description....
Wall "E" Height (H) = 24'-0" Seismic EFP = 62 pcf

Page: _____
Date: MAY 25,2005

This Wall in File: C:\Program Files\RP2005\los alamos rw.r

Retain Pro 2005 , 7-April-2005, (c) 1989-2005
www.retainpro.com/support for latest release
Registration # : RP-1141385 2005001

Cantilevered Retaining Wall Design

Code: IBC 2003

Criteria

Retained Height	=	24.00 ft
Wall height above soil	=	0.00 ft
Slope Behind Wall	=	0.00 : 1
Height of Soil over Toe	=	0.00 in
Water height over heel	=	0.0 ft
Wind on Stem	=	0.0 psf

Soil Data

Allow Soil Bearing	=	5,000.0 psf
Equivalent Fluid Pressure Method		
Heel Active Pressure	=	62.0 psf/ft
Toe Active Pressure	=	62.0 psf/ft
Passive Pressure	=	54.0 psf/ft
Soil Density	=	130.00 pcf
Footing||Soil Friction	=	0.650
Soil height to ignore for passive pressure	=	0.00 in

Footing Dimensions & Strengths

Toe Width	=	5.50 ft
Heel Width	=	9.50
Total Footing Width	=	15.00
Footing Thickness	=	27.00 in
Key Width	=	30.00 in
Key Depth	=	24.00 in
Key Distance from Toe	=	5.50 ft

f'c = 3,000 psi Fy = 60,000 psi
Footing Concrete Density = 150.00 pcf
Min. As % = 0.0018
Cover @ Top = 2.00 in @ Btm.= 3.00 in

Surcharge Loads

Surcharge Over Heel	=	0.0 psf
Used To Resist Sliding & Overturning		
Surcharge Over Toe	=	0.0 psf
Used for Sliding & Overturning		

Lateral Load Applied to Stem

Lateral Load	=	0.0 #/ft
...Height to Top	=	0.00 ft
...Height to Bottom	=	0.00 ft

Adjacent Footing Load

Adjacent Footing Load	=	0.0 lbs
Footing Width	=	0.00 ft
Eccentricity	=	0.00 in
Wall to Ftg CL Dist	=	0.00 ft
Footing Type		
Base Above/Below Soil at Back of Wall	=	0.0 ft
Poisson's Ratio	=	0.300

Axial Load Applied to Stem

Axial Dead Load	=	0.0 lbs
Axial Live Load	=	0.0 lbs
Axial Load Eccentricity	=	0.0 in

*Design Summary

Wall Stability Ratios

Overturning	=	2.21 OK
Sliding	=	1.15 Ratio < 1.5!
Total Bearing Load	=	40,562 lbs
...resultant ecc.	=	22.90 in
Soil Pressure @ Toe	=	4,769 psf OK
Soil Pressure @ Heel	=	640 psf OK
Allowable	=	5,000 psf
Soil Pressure Less Than Allowable		
ACI Factored @ Toe	=	5,171 psf
ACI Factored @ Heel	=	694 psf
Footing Shear @ Toe	=	53.2 psi OK
Footing Shear @ Heel	=	78.7 psi OK
Allowable	=	82.2 psi

Sliding Calcs (Vertical Component NOT Used)

Lateral Sliding Force	=	21,204.0 lbs
less 100% Passive Force	=	- 487.7 lbs
less 100% Friction Force	=	- 13,824.1 lbs
Added Force Req'd	=	0.0 lbs OK
....for 1.5 : 1 Stability	=	7,494.2 lbs NG

Load Factors

Building Code	IBC 2003
Dead Load	1.200
Live Load	1.600
Earth, H	1.400
Wind, W	1.600
Seismic, E	1.000

Stem Construction

		Top Stem	2nd	3rd	4th
		Stem OK	Stem OK	Stem OK	Stem OK
Design Height Above Ftg	ft =	20.00	13.00	5.00	0.00
Wall Material Above "Ht"	=	Concrete	Concrete	Concrete	Concrete
Thickness	=	30.00	30.00	30.00	30.00
Rebar Size	=	# 5	# 5	# 7	# 9
Rebar Spacing	=	12.00	6.00	6.00	6.00
Rebar Placed at	=	Edge	Edge	Edge	Edge
Design Data					
fb/FB + fa/Fa	=	**0.025**	**0.262**	**0.712**	**0.872**
Total Force @ Section	lbs =	694.4	5,251.4	15,667.4	24,998.4
Moment....Actual	ft-# =	925.9	19,255.1	99,226.9	199,987.2
Moment.....Allowable	ft-# =	37,239.8	73,629.0	139,428.0	229,237.5
Shear.....Actual	psi =	2.1	16.2	48.4	75.9
Shear.....Allowable	psi =	82.2	82.2	82.2	82.2
Wall Weight	psf =	375.0	375.0	375.0	375.0
Rebar Depth 'd'	in =	27.00	27.00	27.00	27.44
LAP SPLICE IF ABOVE	in =	21.36	21.36	37.38	48.06
LAP SPLICE IF BELOW	in =	21.36	21.36	37.38	
HOOK EMBED INTO FTG	in =				17.25
Masonry Data					
f'm	psi =				
Fs	psi =				
Solid Grouting	=				
Special Inspection	=				
Modular Ratio 'n'	=				
Short Term Factor	=				
Equiv. Solid Thick.	=				
Masonry Block Type =					
Concrete Data					
f'c	psi =	3,000.0	3,000.0	3,000.0	3,000.0
Fy	psi =	60,000.0	60,000.0	60,000.0	60,000.0

Retain Pro 2005 , 7-April-2005, (c) 1989-2005
www.retainpro.com/support for latest release
Registration # : RP-1141385 2005001

Cantilevered Retaining Wall Design

Code: IBC 2003

Footing Design Results

		Toe	Heel	
Factored Pressure	=	5,171	694	psf
Mu' : Upward	=	69,932	34,056	ft-#
Mu' : Downward	=	6,126	145,439	ft-#
Mu: Design	=	63,807	111,384	ft-#
Actual 1-Way Shear	=	53.22	78.68	psi
Allow 1-Way Shear	=	82.16	82.16	psi

Toe Reinforcing	=	# 9 @ 12.00 in
Heel Reinforcing	=	# 9 @ 12.25 in
Key Reinforcing	=	# 7 @ 12.50 in

Other Acceptable Sizes & Spacings

Toe: #4@ 3.00 in, #5@ 4.75 in, #6@ 6.50 in, #7@ 8.75 in, #8@ 11.75 in, #9@ 14.75
Heel: #4@ 2.50 in, #5@ 3.75 in, #6@ 5.25 in, #7@ 7.00 in, #8@ 9.00 in, #9@ 11.50
Key:

Summary of Overturning & Resisting Forces & Moments

Item		.....OVERTURNING..... Force lbs	Distance ft	Moment ft-#
Heel Active Pressure	=	21,360.9	8.75	186,908.2
Toe Active Pressure	=	-156.9	0.75	-117.7
Surcharge Over Toe	=			
Adjacent Footing Load	=			
Added Lateral Load	=			
Load @ Stem Above Soil	=			
Total	=	21,204.0	**O.T.M.** =	186,790.5

Resisting/Overturning Ratio = **2.21**

Vertical Loads used for Soil Pressure = 40,562.2 lbs

Vertical component of active pressure used for soil pressure

		.....RESISTING..... Force lbs	Distance ft	Moment ft-#
Soil Over Heel	=	21,840.0	11.50	251,160.0
Sloped Soil Over Heel	=			
Surcharge Over Heel	=			
Adjacent Footing Load	=			
Axial Dead Load on Stem	=		0.00	
Soil Over Toe	=			
Surcharge Over Toe	=			
Stem Weight(s)	=	9,000.0	6.75	60,750.0
Earth @ Stem Transitions	=			
Footing Weight	=	5,062.5	7.50	37,968.8
Key Weight	=	750.0	6.75	5,062.5
Vert. Component	=	3,909.7	15.00	58,645.8
Total	=	40,562.2 lbs	**R.M.=**	413,587.0

DESIGNER NOTES:

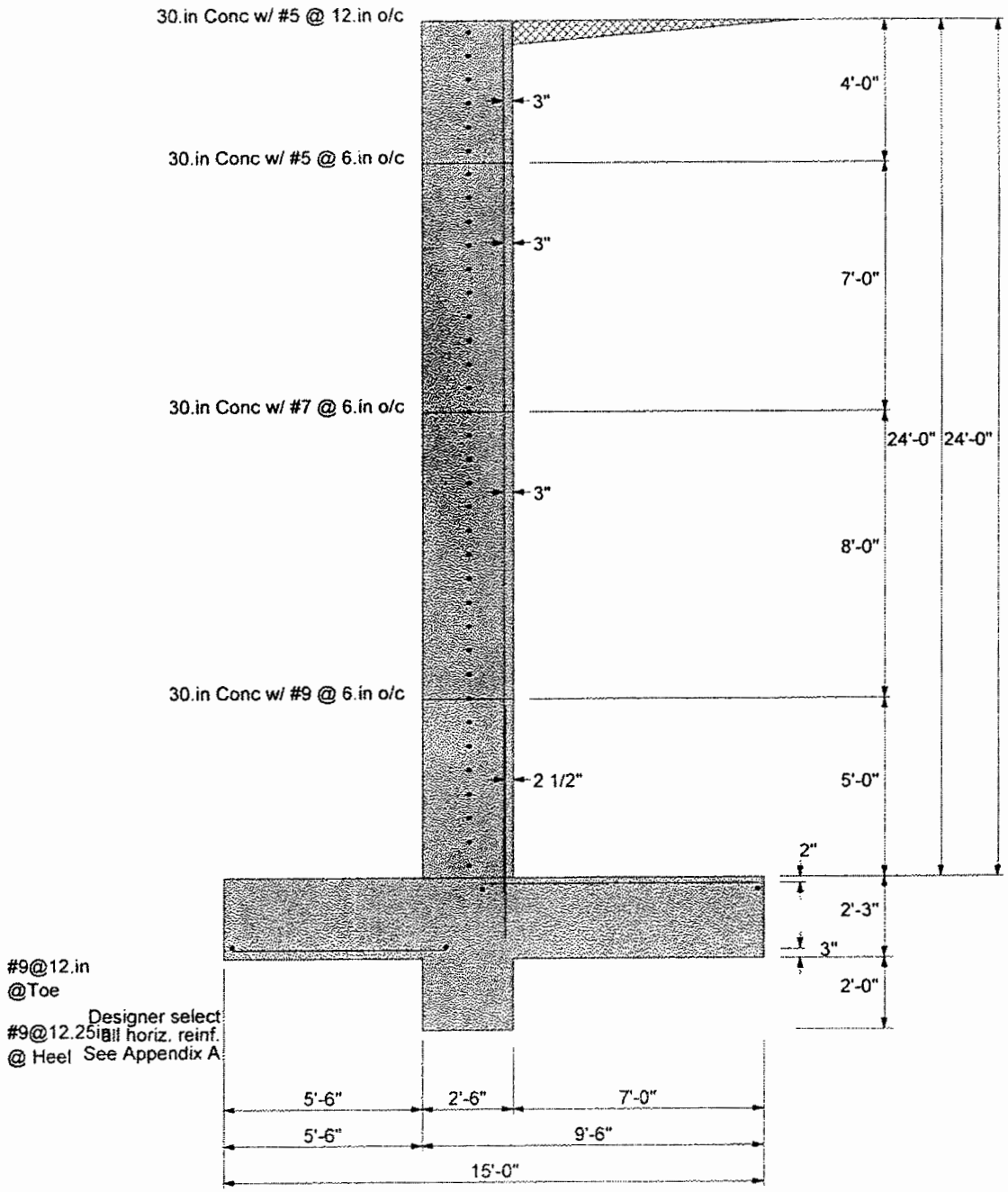
30.in Conc w/ #5 @ 12.in o/c
30.in Conc w/ #5 @ 6.in o/c
30.in Conc w/ #7 @ 6.in o/c
30.in Conc w/ #9 @ 6.in o/c
3"
3"
3"
2 1/2"
4'-0"
7'-0"
8'-0"
5'-0"
24'-0"
24'-0"
2"
2'-3"
3"
2'-0"
#9@12.in
@Toe
#9@12.25in
@ Heel
Designer select
all horiz. reinf.
See Appendix A
5'-6"
2'-6"
7'-0"
5'-6"
9'-6"
15'-0"

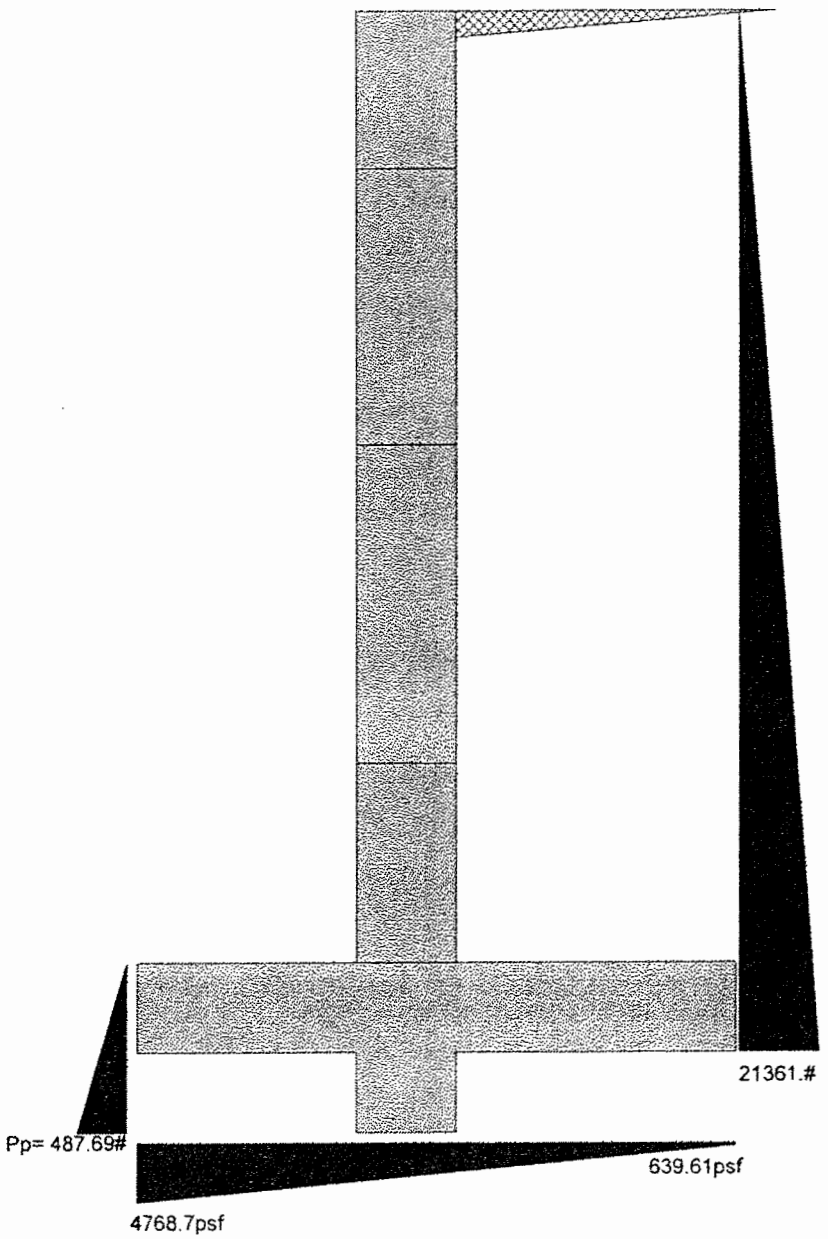
21361.#
Pp= 487.69#
639.61psf
4768.7psf

TCPI
436 Creamery Way, Suite 100
Exton, Pa 19341
Los Alamos Retaining Wall No. 1

Title : Wall 'E' H=24' Equipment
Job # : E-05129 Dsgnr: JJF
Description....
Wall "E" Height (H) = 24'-0" Equipment Load EFP = 46

Page: _____
Date: MAY 25,2005

This Wall in File: C:\Program Files\RP2005\los alamos rw.r

Retain Pro 2005 , 7-April-2005, (c) 1989-2005
www.retainpro.com/support for latest release
Registration # : RP-1141385 2005001

Cantilevered Retaining Wall Design

Code: IBC 2003

Criteria

Retained Height	=	24.00 ft
Wall height above soil	=	0.00 ft
Slope Behind Wall	=	0.00 : 1
Height of Soil over Toe	=	0.00 in
Water height over heel	=	0.0 ft
Wind on Stem	=	0.0 psf

Soil Data

Allow Soil Bearing	=	5,000.0 psf
Equivalent Fluid Pressure Method		
Heel Active Pressure	=	46.0 psf/ft
Toe Active Pressure	=	46.0 psf/ft
Passive Pressure	=	54.0 psf/ft
Soil Density	=	130.00 pcf
Footing||Soil Friction	=	0.650
Soil height to ignore for passive pressure	=	0.00 in

Footing Dimensions & Strengths

Toe Width	=	5.50 ft
Heel Width	=	9.50
Total Footing Width	=	15.00
Footing Thickness	=	27.00 in
Key Width	=	30.00 in
Key Depth	=	24.00 in
Key Distance from Toe	=	5.50 ft

f'c = 3,000 psi Fy = 60,000 psi
Footing Concrete Density = 150.00 pcf
Min. As % = 0.0018
Cover @ Top = 2.00 in @ Btm.= 3.00 in

Surcharge Loads

Surcharge Over Heel = 0.0 psf
Used To Resist Sliding & Overturning
Surcharge Over Toe = 0.0 psf
Used for Sliding & Overturning

Lateral Load Applied to Stem

Lateral Load	=	0.0 #/ft
...Height to Top	=	0.00 ft
...Height to Bottom	=	0.00 ft

Adjacent Footing Load

Adjacent Footing Load	=	2,000.0 lbs
Footing Width	=	8.00 ft
Eccentricity	=	0.00 in
Wall to Ftg CL Dist	=	6.00 ft
Footing Type		
Base Above/Below Soil at Back of Wall	=	0.0 ft
Poisson's Ratio	=	0.300

Axial Load Applied to Stem

Axial Dead Load	=	0.0 lbs
Axial Live Load	=	0.0 lbs
Axial Load Eccentricity	=	0.0 in

*Design Summary

Wall Stability Ratios

Overturning	=	2.27 OK
Sliding	=	1.46 Ratio < 1.5!
Total Bearing Load	=	37,162 lbs
...resultant ecc.	=	24.73 in
Soil Pressure @ Toe	=	4,520 psf OK
Soil Pressure @ Heel	=	435 psf OK
Allowable	=	5,000 psf
Soil Pressure Less Than Allowable		
ACI Factored @ Toe	=	5,448 psf
ACI Factored @ Heel	=	525 psf
Footing Shear @ Toe	=	56.0 psi OK
Footing Shear @ Heel	=	58.9 psi OK
Allowable	=	82.2 psi

Sliding Calcs (Vertical Component NOT Used)

Lateral Sliding Force	=	16,924.9 lbs
less 100% Passive Force	=	- 487.7 lbs
less 100% Friction Force	=	- 14,155.0 lbs
Added Force Req'd	=	0.0 lbs OK
....for 1.5 : 1 Stability	=	744.6 lbs NG

Load Factors

Building Code	IBC 2003
Dead Load	1.200
Live Load	1.600
Earth, H	1.600
Wind, W	1.600
Seismic, E	1.000

Stem Construction

		Top Stem	2nd	3rd	4th
		Stem OK	Stem OK	Stem OK	Stem OK
Design Height Above Ftg	ft =	20.00	13.00	5.00	0.00
Wall Material Above "Ht"	=	Concrete	Concrete	Concrete	Concrete
Thickness	=	30.00	30.00	30.00	30.00
Rebar Size	=	# 5	# 5	# 7	# 9
Rebar Spacing	=	12.00	6.00	6.00	6.00
Rebar Placed at	=	Edge	Edge	Edge	Edge
Design Data					
fb/FB + fa/Fa	=	**0.029**	**0.305**	**0.738**	**0.861**
Total Force @ Section	lbs =	873.3	5,748.8	15,048.6	23,074.3
Moment....Actual	ft-# =	1,096.8	22,485.6	102,892.0	197,460.5
Moment.....Allowable	ft-# =	37,239.8	73,629.0	139,428.0	229,237.5
Shear.....Actual	psi =	2.7	17.7	46.4	70.1
Shear.....Allowable	psi =	82.2	82.2	82.2	82.2
Wall Weight	psf =	375.0	375.0	375.0	375.0
Rebar Depth 'd'	in =	27.00	27.00	27.00	27.44
LAP SPLICE IF ABOVE	in =	21.36	21.36	37.38	48.06
LAP SPLICE IF BELOW	in =	21.36	21.36	37.38	
HOOK EMBED INTO FTG	in =				17.25
Masonry Data					
f'm	psi =				
Fs	psi =				
Solid Grouting	=				
Special Inspection	=				
Modular Ratio 'n'	=				
Short Term Factor	=				
Equiv. Solid Thick.	=				
Masonry Block Type	=				
Concrete Data					
f'c	psi =	3,000.0	3,000.0	3,000.0	3,000.0
Fy	psi =	60,000.0	60,000.0	60,000.0	60,000.0

Retain Pro 2005 , 7-April-2005, (c) 1989-2005
www.retainpro.com/support for latest release
Registration # : RP-1141385 2005001

Cantilevered Retaining Wall Design

Code: IBC 2003

Footing Design Results

		Toe	Heel
Factored Pressure	=	5,448	525 psf
Mu' : Upward	=	73,305	31,617 ft-#
Mu' : Downward	=	6,126	101,651 ft-#
Mu: Design	=	67,180	70,033 ft-#
Actual 1-Way Shear	=	56.04	58.94 psi
Allow 1-Way Shear	=	82.16	82.16 psi

Toe Reinforcing = # 9 @ 12.00 in
Heel Reinforcing = # 9 @ 12.25 in
Key Reinforcing = # 7 @ 12.50 in

Other Acceptable Sizes & Spacings

Toe: #4@ 3.00 in, #5@ 4.50 in, #6@ 6.25 in, #7@ 8.50 in, #8@ 11.00 in, #9@ 14.00
Heel: #4@ 3.00 in, #5@ 4.50 in, #6@ 6.25 in, #7@ 8.50 in, #8@ 11.00 in, #9@ 14.00
Key:

Summary of Overturning & Resisting Forces & Moments

Item		.....OVERTURNING..... Force lbs	Distance ft	Moment ft-#
Heel Active Pressure	=	15,848.4	8.75	138,673.8
Toe Active Pressure	=	-116.4	0.75	-87.3
Surcharge Over Toe	=			
Adjacent Footing Load	=	1,192.9	16.84	20,083.4
Added Lateral Load	=			
Load @ Stem Above Soil	=			
Total	=	16,924.9	**O.T.M.** =	158,669.9

Resisting/Overturning Ratio = **2.27**

Vertical Loads used for Soil Pressure = 37,161.6 lbs

Vertical component of active pressure NOT used for soil pressure

		.....RESISTING..... Force lbs	Distance ft	Moment ft-#
Soil Over Heel	=	21,840.0	11.50	251,160.0
Sloped Soil Over Heel	=			
Surcharge Over Heel	=			
Adjacent Footing Load	=	509.1	11.50	5,854.5
Axial Dead Load on Stem	=		0.00	
Soil Over Toe	=			
Surcharge Over Toe	=			
Stem Weight(s)	=	9,000.0	6.75	60,750.0
Earth @ Stem Transitions	=			
Footing Weight	=	5,062.5	7.50	37,968.8
Key Weight	=	750.0	6.75	5,062.5
Vert. Component	=			
Total	=	37,161.6 lbs	**R.M.=**	360,795.8

DESIGNER NOTES:

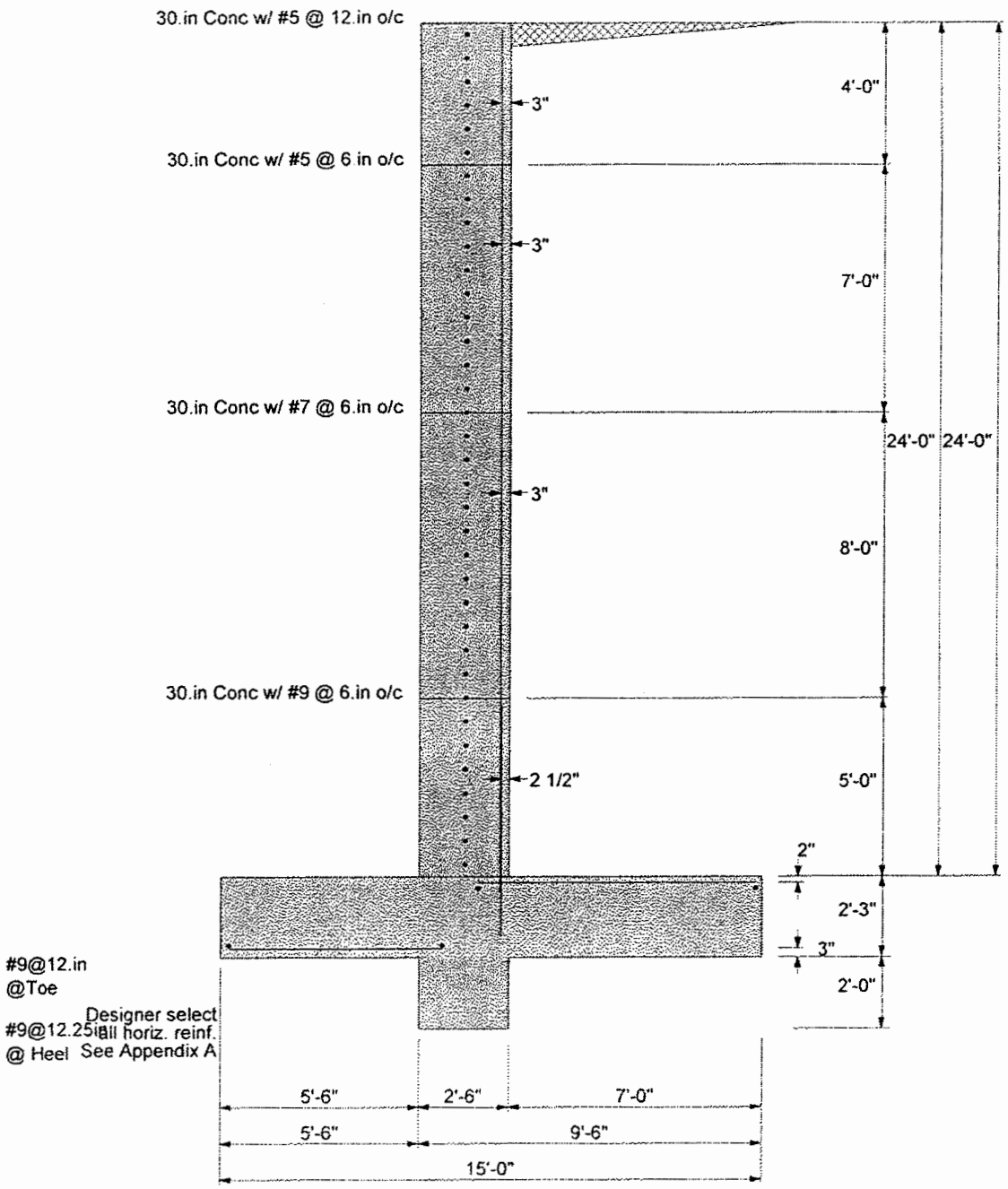
30.in Conc w/ #5 @ 12.in o/c
30.in Conc w/ #5 @ 6 in o/c
30.in Conc w/ #7 @ 6.in o/c
30.in Conc w/ #9 @ 6.in o/c
3"
3"
3"
2 1/2"
4'-0"
7'-0"
8'-0"
5'-0"
24'-0"
24'-0"
2"
2'-3"
3"
2'-0"
#9@12.in
@Toe
#9@12.25in
@ Heel
Designer select
all horiz. reinf.
See Appendix A
5'-6"
2'-6"
7'-0"
5'-6"
9'-6"
15'-0"

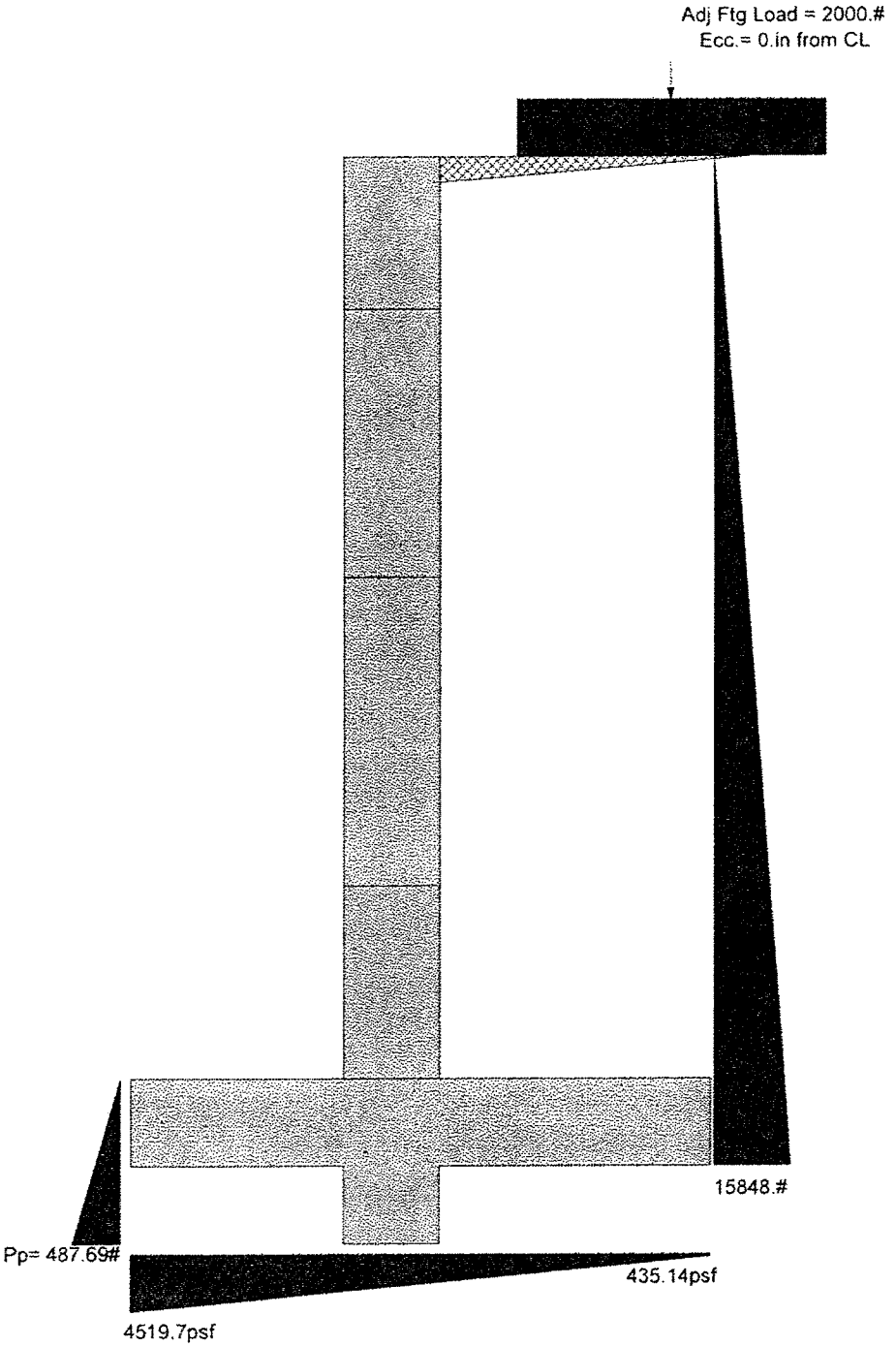
Adj Ftg Load = 2000.#
Ecc.= 0.in from CL
15848.#
Pp= 487.69#
435.14psf
4519.7psf

WALL Mark 'E' Seismic Loads

Definitions:

B = Width of Toe (feet)
C = Width of Heel (feet)
W = Width of Base (feet)
h wall = Height of Wall over base (feet)
t_{base} = thickness of Base (feet)
t_{stem} = Thickness of Stem (feet)
γ = density of backfill (pcf)
$\gamma_{concrete}$ density = 150 pcf
EFP_{static} = Design equivalent fluid pressure (pcf), static condition.
EFP_{AE} = Design equivalent fluid pressure (pcf), Active Earth pressure under seismic conditions..
ϕ = Internial angle of friction of the soil.
δ = Friction angle of soil to concrete wall.
K_h = Alternate seismic force developed from the Geotechnical Calculations page 12 in Appendix 'B'

Wall Mk. 'E' Data:

$B := 5.5$ (feet) $h_{wall} := 24.0$ (feet) $t_{stem} := 2.50$ (feet)

$C := 7.0$ (feet) $W := 15$ (feet) $t_{base} := 2.25$ (feet)

Soil Data: $\gamma := 130$ (pcf) $\delta := 22 \cdot deg$ $\phi := 32 \cdot deg$

$EFP_{static} := 46$ (pcf)

$EFP_{AE} := 62$ (pcf)

$K_h := 0.09$

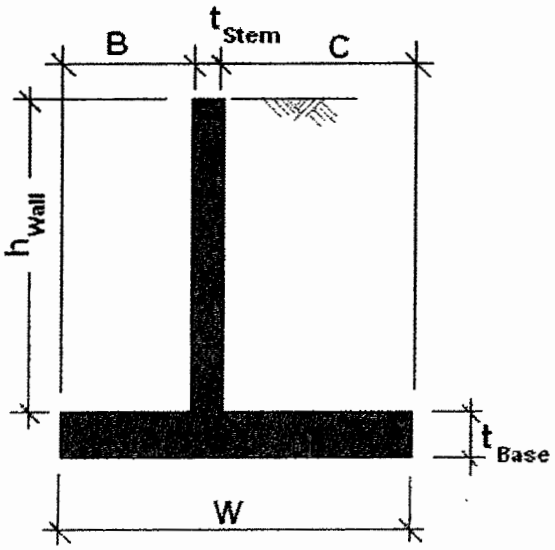

WALL STABILITY ANALYSIS

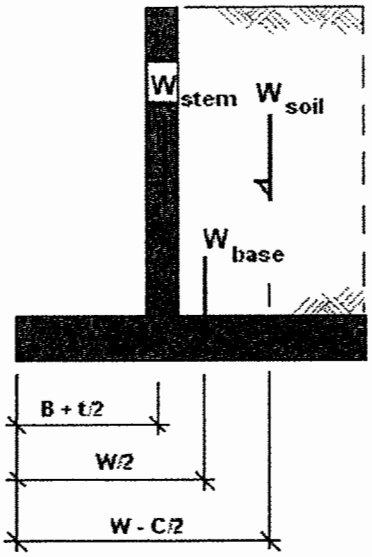

Stabilizing Forces

Weights: (kips.per foot)

$W_{stem} := (0.150) \cdot h_{wall} \cdot t_{stem}$ $W_{stem} = 9.000$

$W_{base} := (0.150) \cdot W \cdot t_{base}$ $W_{base} = 5.063$

$W_{soil} := \frac{\gamma \cdot h_{wall} \cdot C}{1000}$ $W_{soil} = 21.84$

$H := h_{wall} + t_{base}$ $H = 26.25$ (feet)

Driving Forces:

$P_{ST} := \frac{(EFP_{static}) \cdot \frac{1}{2} \cdot (H)^2}{1000}$ $P_{ST} = 15.848$ (kips)

$P_{SE} := \frac{(EFP_{AE}) \cdot \frac{1}{2} \cdot (H)^2}{1000}$ $P_{SE} = 21.361$ (kips)

$\Delta P_1 := P_{SE} - P_{ST}$ $\Delta P_1 = 5.512$ (kips)

$\Delta P_2 := \frac{K_h \cdot \gamma \cdot (H)^2}{1000}$ $\Delta P_2 = 8.062$ (kips)

The larger value of either ΔP_1 or ΔP_2 is to be used in the seismic analysis

Let: $\Delta := \begin{pmatrix} \Delta P_1 \\ \Delta P_2 \end{pmatrix}$ $\Delta P := \max(\Delta)$ $\Delta P = 8.062$ (kips)

Driving Forces and Moments about the Toe:

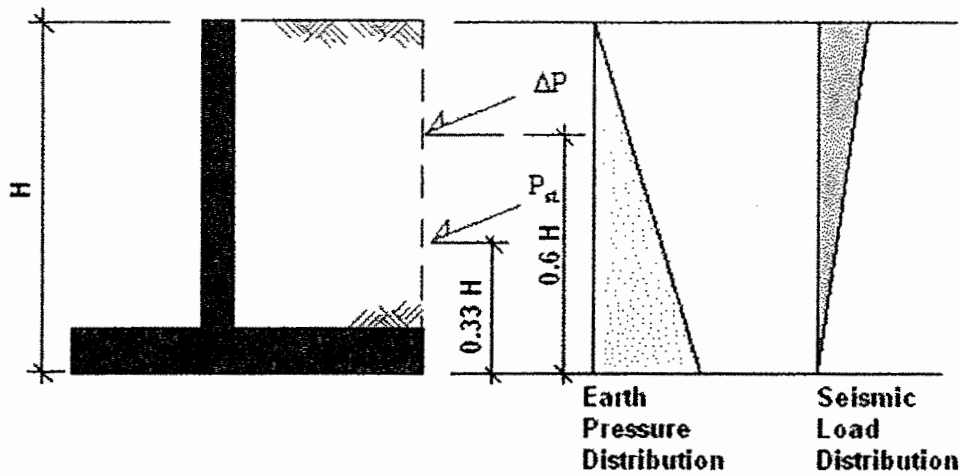

Horizontal Driving Force (**HDF**) is the sum of P_{st} and ΔP in the horizontal direction:

$HDF := (P_{ST} + \Delta P)\cdot\cos(\delta)$ $\quad HDF = 22.169$ (kips)

Driving Moment ($\mathbf{M_d}$) is the sum of the driving moments about the Toe.

$M_d := (P_{ST}\cdot 0.333\cdot H)\cdot\cos(\delta) + (\Delta P\cdot 0.6\cdot H)\cdot\cos(\delta)$ $\quad M_d = 246.179$ (ft-kips)

Resisting Forces and Moments about the Toe:

Resisting Forces (**RF**) neglecting passive pressure, a conservative analysis:

$RF := \tan(\phi)(W_{stem} + W_{base} + W_{soil} + P_{ST}\cdot\sin(\delta) + \Delta P\cdot\sin(\delta))$

$RF = 28.031$ (kips)

"Factor of Safety" against sliding is the ratio of **RF** to **HDF**

$Ratio_{sliding} := \frac{RF}{HDF}$ $\quad Ratio_{sliding} = 1.264$

Resisting Moments about the Toe M_r:

$$M_r := W_{stem}\cdot(B + t_{stem}) + W_{base}\cdot\left(\frac{W}{2}\right) + W_{soil}\cdot\left(W - \frac{C}{2}\right) + (P_{ST} + \Delta P)\cdot W\cdot\sin(\delta)$$

$M_r = 495.484$ (ft-kips)

"Factor of Safety" against overturning the ratio of $\mathbf{M_r}$ to $\mathbf{M_d}$

$$Ratio_{OT} := \frac{M_r}{M_d} \qquad Ratio_{OT} = 2.013$$

Calculate Soil Bearing Pressurs:

Net Moment: $\Delta M := M_r - M_d$ $\quad \Delta M = 249.305$ (ft-kips)

$$X := \frac{\Delta M}{(W_{stem} + W_{base} + W_{soil} + P_{ST}\cdot\sin(\delta) + \Delta P\cdot\sin(\delta))} \qquad X = 5.557 \text{ (feet)}$$

$$R := (W_{stem} + W_{base} + W_{soil} + P_{ST}\cdot\sin(\delta) + \Delta P\cdot\sin(\delta)) \qquad R = 44.86 \text{ (kips)}$$

Eccentricity (e): $e := \frac{W}{2} - X$ $\quad e = 1.943$ (feet) $\quad \frac{W}{6} = 2.5$ (feet)

$$Eccentricity := \begin{cases} \text{"OK Within Middle Third"} & \text{if } e \le \frac{W}{6} \\ \text{"Non in Middle one-third"} & \text{otherwise} \end{cases}$$

Eccentricity = "OK Within Middle Third"

$$SP_2 := \frac{R}{W}\cdot\left(1 + \frac{e}{W}\right) \qquad SP_2 = 3.378$$ Maximum Soil Pearing Pressure (kips/ft^2)

$$SP_1 := \frac{R}{W}\cdot\left(1 - \frac{e}{W}\right) \qquad SP_1 = 2.603$$ Minimum Soil Pearing Pressure (kips/ft^2)

Concrete Design:

The design on the concrete elements will be in accordance with ACI 318-02.

See Section 9.2 of ACI 319-02

$U_{DL} := 1.2 \qquad U_H := 1.6 \qquad U_E := 1.0$

$$R_{ult} := \left(U_{DL} \cdot W_{stem} + U_{DL} \cdot W_{base} + U_E \cdot W_{soil} + U_E \cdot P_{ST} \cdot \sin(\delta) + U_E \cdot \Delta P \cdot \sin(\delta)\right)$$

$$M_{d_ult} := U_E \cdot \left[\left(P_{ST} \cdot 0.333 \cdot H\right) \cdot \cos(\delta) + \left(\Delta P \cdot 0.6 \cdot H\right) \cdot \cos(\delta)\right]$$

$$M_{r_ult_1} := U_{DL} \cdot W_{stem} \cdot \left(B + t_{stem}\right) + U_{DL} \cdot W_{base} \cdot \left(\frac{W}{2}\right) + U_{DL} \cdot W_{soil} \cdot \left(W - \frac{C}{2}\right)$$

$$M_{r_ult_2} := U_{DL} \cdot \left[\left(P_{ST} + \Delta P\right) \cdot W \cdot \sin(\delta)\right]$$

$$M_{r_ult} := M_{r_ult_1} + M_{r_ult_2}$$

Net Ultimate Moment: $\Delta M_{ult} := M_{r_ult} - M_{d_ult} \qquad \Delta M_{ult} = 348.402$ (ft-kips)

$X_{ult} := \dfrac{\Delta M_{ult}}{\left(R_{ult}\right)} \qquad X_{ult} = 7.308$ (feet)

$R_{ult} = 47.672$ (kips)

Eccentricity (e): $e_{ult} := \dfrac{W}{2} - X_{ult} \qquad e_{ult} = 0.192$ (feet) $\qquad \dfrac{W}{6} = 2.5$ (feet)

$$\text{Eccentricity} := \begin{cases} \text{"OK Within Middle Third"} & \text{if } e_{ult} \le \dfrac{W}{6} \\ \text{"Non in Middle one-third"} & \text{otherwise} \end{cases}$$

Eccentricity = "OK Within Middle Third"

$SP_{2_ult} := \dfrac{R_{ult}}{W} \cdot \left(1 + \dfrac{e_{ult}}{W}\right) \qquad SP_{2_ult} = 3.219$ Maximum Soil Pearing Pressure (kips/ft^2)

$SP_{1_ult} := \frac{R_{ult}}{W} \cdot \left(1 - \frac{e_{ult}}{W}\right)$ $SP_{1_ult} = 3.138$ Minimum Soil Pearing Pressure (kips/ft²)

$\Delta SP_{ult} := SP_{2_ult} - SP_{1_ult}$ $\Delta SP_{ult} = 0.081$ (kips/ft²)

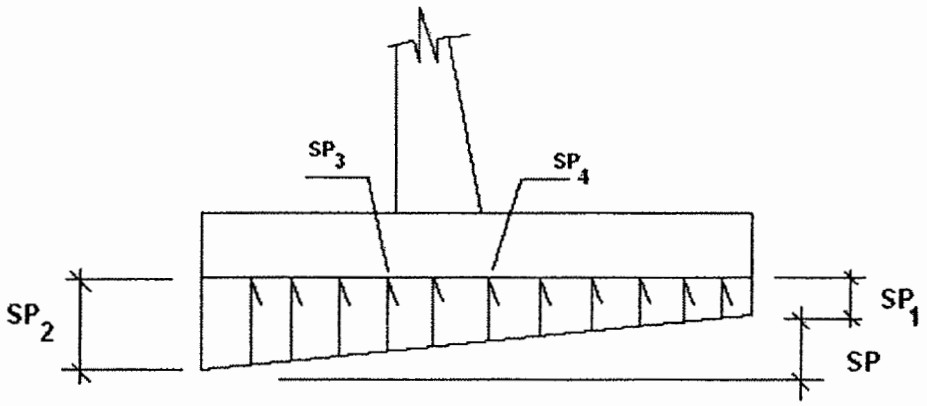

Pressure Diagram - Toe & Heel

Soil Pressure at Front Face of Stem:

$SP_{3_ult} := SP_{2_ult} - \frac{\Delta SP_{ult}}{W} \cdot (B)$ $SP_{3_ult} = 3.189$ (ksf)

Soil Pressure at Rear Face of Stem:

$SP_{4_ult} := SP_{2_ult} - \frac{\Delta SP_{ult}}{W} \cdot (B + t_{stem})$ $SP_{4_ult} = 3.175$ (ksf)

Moment at Front Face of Stem:

$$M_{toe} := SP_{3_ult} \cdot \frac{B^2}{2} + (SP_{2_ult} - SP_{3_ult}) \cdot \frac{(B)}{2} \cdot \left(\frac{2}{3}\right) \cdot B - U_{DL} \cdot (0.150) \cdot t_{base} \cdot \left(\frac{B^2}{2}\right)$$

$M_{toe} = 42.408$ (ft-kips)

Concrete Data:

$f'_c := 3$ ksi $\quad f_y := 60$ ksi $\quad M_u := M_{toe}$ ft-kips

$b := 12$ inches $\quad d := (12)\cdot t_{base} - 4 \quad d = 23$ inches $\quad \phi_f := 0.90$

A_s calculation is from CRSI Handbook

$$A_{s_required} := \frac{1.7\cdot f'_c\cdot b\cdot d}{2\cdot f_y} - \frac{1}{2}\cdot\sqrt{\frac{2.89\cdot\left(f'_c\cdot b\cdot d\right)^2}{\left(f_y\right)^2} - \frac{6.8\cdot f'_c\cdot b\cdot M_u\cdot 12}{\phi_f\cdot\left(f_y\right)^2}}$$

$A_{s_required} = 0.417$ Inches^2 $\quad \rho := \frac{A_{s_required}}{12\cdot d} \quad \rho = 0.0015$

Shear in Toe:

Soil Pressure at d from front face:

$$SP_{31_ult} := SP_{2_ult} - \frac{\Delta SP_{ult}}{W}\cdot\left(B - \frac{d}{12}\right) \quad SP_{31_ult} = 3.199 \quad \text{(ksf)}$$

$$V_{toe} := SP_{31_ult}\cdot\left(B - \frac{d}{12}\right) + \left(SP_{2_ult} - SP_{31_ult}\right)\cdot\left(\frac{1}{2}\right)\cdot\left(B - \frac{d}{12}\right)$$

$V_{toe} = 11.499$ (kips/foot)

$$\phi V_n := \frac{0.75\cdot 12\cdot d\cdot(2)\cdot\sqrt{f'_c\cdot 1000}}{1000} \quad \phi V_n = 22.676 \quad \text{(kips/foot)}$$

Moment at Rear Face of Stem in the Heel:

$$M_{heel} := SP_{1_ult}\cdot\frac{C^2}{2} + \left(SP_{4_ult} - SP_{1_ult}\right)\cdot\frac{(C)}{2}\cdot\left(\frac{1}{3}\right)\cdot C - U_{DL}\cdot(0.150)\cdot t_{base}\cdot\left(\frac{C^2}{2}\right)$$

$M_{heel} = 67.256$ (ft-kips) $\quad$ Let: $\quad M_u := M_{heel}$

A_s calculation is from CRSI Handbook

$$A_{s_required} := \frac{1.7 \cdot f'_c \cdot b \cdot d}{2 \cdot f_y} - \frac{1}{2} \cdot \sqrt{\frac{2.89 \cdot (f'_c \cdot b \cdot d)^2}{(f_y)^2} - \frac{6.8 \cdot f'_c \cdot b \cdot M_u \cdot 12}{\phi_f \cdot (f_y)^2}}$$

$A_{s_required} = 0.669$ Inches^2 $\rho := \frac{A_{s_required}}{12 \cdot d}$ $\rho = 0.0024$

Shear in Hell:

Soil Pressure at d from front rear face of stem:

$$SP_{41_ult} := SP_{1_ult} + \frac{\Delta SP_{ult}}{W} \cdot \left(C - \frac{d}{12}\right) \quad SP_{41_ult} = 3.165 \quad \text{(ksf)}$$

$$V_{heel} := SP_{1_ult} \cdot \left(C - \frac{d}{12}\right) + (SP_{41_ult} - SP_{1_ult}) \cdot \left(\frac{1}{2}\right) \cdot \left(C - \frac{d}{12}\right)$$

$V_{heel} = 16.019$ (kips/foot)

$$\phi V_n := \frac{0.75 \cdot 12 \cdot d \cdot (2) \cdot \sqrt{f'_c \cdot 1000}}{1000} \quad \phi V_n = 22.676 \quad \text{(kips/foot)}$$

Moments in Stem:

Driving Forces:

$$P_{ST} := \frac{(EFP_{static}) \cdot \frac{1}{2} \cdot (h_{wall})^2}{1000} \quad P_{ST} = 13.248 \quad \text{(kips)}$$

$$P_{SE} := \frac{(EFP_{AE}) \cdot \frac{1}{2} \cdot (h_{wall})^2}{1000} \quad P_{SE} = 17.856 \quad \text{(kips)}$$

$\Delta P_1 := P_{SE} - P_{ST}$ $\Delta P_1 = 4.608$ (kips)

$$\Delta P_2 := \frac{K_h \cdot \gamma \cdot (h_{wall})^2}{1000} \qquad \Delta P_2 = 6.739 \qquad \text{(kips)}$$

The larger value of either ΔP_1 or ΔP_2 is to be used in the seismic analysis

Let: $\Delta := \begin{pmatrix} \Delta P_1 \\ \Delta P_2 \end{pmatrix}$ $\qquad \Delta P := \max(\Delta) \qquad \Delta P = 6.739 \qquad$ (kips)

$$M_{stem} := U_E \cdot \left[\left(P_{ST} \cdot \cos(\delta) \cdot 0.333 h_{wall} \right) + \left(\Delta P \cdot 0.600 \cdot h_{wall} \right) \right]$$

$M_{stem} = 195.213$ (ft-kips) Let: $M_u := M_{stem}$ $\qquad d := (12) \cdot t_{stem} - 3.0$

$d = 27$ (inches)

A_s calculation is from CRSI Handbook

$$A_{s_required} := \frac{1.7 \cdot f'_c \cdot b \cdot d}{2 \cdot f_y} - \frac{1}{2} \cdot \sqrt{\frac{2.89 \cdot (f'_c \cdot b \cdot d)^2}{(f_y)^2} - \frac{6.8 \cdot f'_c \cdot b \cdot M_u \cdot 12}{\phi_f \cdot (f_y)^2}}$$

$A_{s_required} = 1.713$ Inches^2 $\qquad \rho := \frac{A_{s_required}}{12 \cdot d} \qquad \rho = 0.0053$

APPENDIX "A"

List of References

LIST OF REFERENCES;

1.0 International Building Code (IBC) 2003 edition

2.0 Building Code Requirements for Structural Concrete (ACI 318-02)

3.0 *Basics of Retaining Wall Design - A Guide for the Practicing Engineer*, 6th Edition, April 2005 by Hugh Brooks, HBA Publications, Inc. www.retainpro.com

4.0 CRSI Design Handbook 1996 Edition.

APPENDIX "B"

Geotechnical Calculations

(By WESTON Solutions)

WESTON SOLUTIONS

SHEET 1 of 18

SUBJECT TA-73 Airport Landfill W.O. NO. 13104.002.001.

TASK DESCRIPTION Lateral Earth Pressure Coefficients TASK NO. 7000

PREPARED BY NLD DEPT Consult. DATE 5/18/05

MATH CHECK BY _____ DEPT _____ DATE _____

METHOD REV. BY _____ DEPT _____ DATE _____

APPROVED BY _____ DEPT _____ DATE _____

Develop Seismic Design Criteria For Concrete + MSE Wall Design

- criteria to be developed consistent with IBC 2003:
  - Chapter 16 (Structural Design) Section 1615 (Earthquake Loads - Site Ground Motion) & Section 1616 (Earthquake Loads - Criteria Selection) are relevant.
- From Section 1615.1 (Gen. Proc. for determining Seismic design parameters)

$S_S = (33.85\%)g \rightarrow S_S = .3385g$

$S_1 = (9.76\%)g \rightarrow S_1 = .0976g$

(see pg 2 from USGS Earthquake Hazards Program web site for Zip Code 87544 (Los Alamos, NM)).

$\hookrightarrow S_S =$ 5% Prob of Exceedence (PE) value in 50 yrs for .2 sec period

$S_1 =$ 5% Prob. of Exceedence (PE) value

04P-0685

2

USGS

Earthquake Hazards Program

The input zip-code is 87544. - Los Alamos, NM

ZIP CODE	87544
LOCATION	35.8678 Lat. -106.2682 Long.
DISTANCE TO NEAREST GRID POINT	4.5840 kms
NEAREST GRID POINT	35.9 Lat. -106.3 Long.

Probabilistic ground motion values, in %g, at the Nearest Grid point are:

	10%PE in 50 yr	5%PE in 50 yr	2%PE in 50 yr
PGA	8.963270	14.212500	26.153641
0.2 sec SA	20.231220	33.854210 S_S	59.950050
0.3 sec SA	18.002939	28.778629	54.664909
1.0 sec SA	5.927866	9.756920 S_1	18.967649

The input zip-code is .
Zip code is zero and we go to the end and stop.

PROJECT INFO: Home Page
SEISMIC HAZARD: Hazard by Zip Code

WESTON SOLUTIONS

SHEET 3 of ___

CLIENT/SUBJECT ___ W.O. NO. ___

TASK DESCRIPTION ___ TASK NO. ___

PREPARED BY ___ DEPT ___ DATE ___

MATH CHECK BY ___ DEPT ___ DATE ___

METHOD REV. BY ___ DEPT ___ DATE ___

APPROVED BY ___ DEPT ___ DATE ___

- Per "Table 1615.1.1" (Site Class Definition)
  - 25' high concrete wall
    - wall footing will bear on parent bedrock
    - wall footing will be embedded into rock + likely poured "back to back"
    - However, top of wall will be free to rotate outward

∴ At rest (ie. K_o) LEP condition relevant @ base of wall

∴ Active (ie. K_A) LEP condition relevant @ top of wall

    - Also, from Table 1615.1.1, "Site Class B" (rock) is appropriate for this design
  - MSE wall atop backfill of concrete wall
    - wall will bear on combination of structural fill, rock + C&D waste
    - From Table 1615.1.1,

Site Class D (stiff soil profile) is appropriate for

04P-0685

WESTON SOLUTIONS

SHEET 4 of ____

CLIENT/SUBJECT _____ W.O. NO. _____

TASK DESCRIPTION _____ TASK NO. _____

PREPARED BY _____ DEPT _____ DATE _____

MATH CHECK BY _____ DEPT _____ DATE _____

METHOD REV. BY _____ DEPT _____ DATE _____

APPROVED BY _____ DEPT _____ DATE _____

I.) Concrete Wall

- Site Class B
- $S_S = .3385g$

  $S_1 = .0976g$
- From Section 1615.1.2:

  $F_a = 1.0 \rightarrow$ Table 1615.1.2(1)

  $F_v = 1.0 \rightarrow$ Table 1615.1.2(2)

$\therefore S_{MS} = F_a S_S = (1.0)(.3385g)$

$= .3385g$

$S_{M1} = F_v S_1 = (1.0)(.0976g)$

$= .0976g$

- From Section 1615.1.3:

$S_{DS} = \frac{2}{3} S_{MS} = \frac{2}{3}(.3385g)$

$= .226g$

$S_{D1} = \frac{2}{3} S_{M1} = \frac{2}{3}(.0976g)$

$= .065g$

WESTON SOLUTIONS

SHEET 5 of ____

CLIENT/SUBJECT _____ W.O. NO. _____

TASK DESCRIPTION _____ TASK NO. _____

PREPARED BY _____ DEPT _____ DATE _____

MATH CHECK BY _____ DEPT _____ DATE _____

METHOD REV. BY _____ DEPT _____ DATE _____

APPROVED BY _____ DEPT _____ DATE _____

- From Section 1616.1
  - A "Seismic Design Category" must be assigned for this wall
- From Section 1616.2
  - A "Seismic Use Group" must be assigned for the wall based on Table 1604.5
  - Retaining wall is appropriately classified as "Category II" structure
  - As noted in footnote to Table 1604.5, "Category II" structures are classified as "Seismic Use Group I" for determining the "Seismic Design Category" of the structure for structural design purposes.

an employee-owned company

WESTON SOLUTIONS

SHEET 6 of ___

CLIENT/SUBJECT ___ W.O. NO. ___

TASK DESCRIPTION ___ TASK NO. ___

PREPARED BY ___ DEPT ___ DATE ___

MATH CHECK BY ___ DEPT ___ DATE ___

METHOD REV. BY ___ DEPT ___ DATE ___

APPROVED BY ___ DEPT ___ DATE ___

- From Section 1616.3:
  - For "Seismic Use Group I" & $S_{DS} = .226g$
    ↓
    structure is classified as "Seismic Design Category B"
  - For "Seismic Use Group I" & $S_{D1} = .065g$
    ↓
    structure is classified as "Seismic Design Category A"

More Critical (severe) of these is "Seismic Design Category B" which is the assumption to be used for structural design of the concrete wall. *

WESTON SOLUTIONS

SHEET 7 of ___

CLIENT/SUBJECT ___ W.O. NO. ___

TASK DESCRIPTION ___ TASK NO. ___

PREPARED BY ___ DEPT ___ DATE ___

MATH CHECK BY ___ DEPT ___ DATE ___

METHOD REV. BY ___ DEPT ___ DATE ___

APPROVED BY ___ DEPT ___ DATE ___

Determine the Lateral Earth Pressures to be used to check the global stability condition (i.e. sliding, overturning, etc.) of the wall, as well as for structural design of the wall:

1.) STATIC STABILITY CONDITION

Consistent with discussion on pg 3 (i.e. K_o condition @ base of wall / K_A condition @ top of wall), develop lateral earth pressure diagram assuming that the appropriate lateral earth pressure coefficient (K_{ST}) is the average of the 2 values:

$$\therefore \quad K_{ST} = \frac{K_o + K_A}{2}$$

& assuming New Mexico Type I Aggregate (see App A for gradation data) which is a well graded sand/gravel structural fill soil will be used as the wall backfill:

ϕ (Type I) $\approx 34°$ $\quad W_{opt} = 5\% \pm$

$\gamma_{D_{max}}$ (Type I) ≈ 130 pcf

includes water content wt necessary for compaction

$\therefore$ 95% $\gamma_{D_{max}} \approx 123.5$ pcf

& γ_T @ 95% DOC $= 123.5$ pcf $(1 + .05) \approx 130$ pcf

an employee-owned company

WESTON SOLUTIONS

SHEET 8 of ___

CLIENT/SUBJECT _____ W.O. NO. _____

TASK DESCRIPTION _____ TASK NO. _____

PREPARED BY _____ DEPT _____ DATE _____

MATH CHECK BY _____ DEPT _____ DATE _____

METHOD REV. BY _____ DEPT _____ DATE _____

APPROVED BY _____ DEPT _____ DATE _____

$\therefore K_o = 1 - \sin\phi$ (granular soils)

$= 1 - \sin 34^\circ$

$= .441$

$$K_A = \frac{\sin^2(\alpha+\phi)}{\sin^2\alpha \sin(\alpha-\delta)\left[1+\sqrt{\frac{\sin(\phi+\delta)\sin(\phi-\beta)}{\sin(\alpha-\delta)\sin(\alpha+\beta)}}\right]^2}$$

where

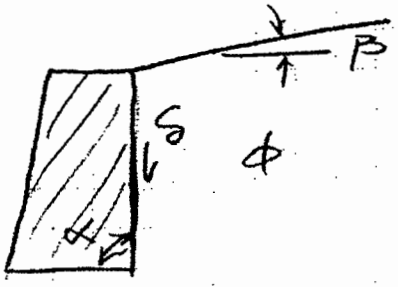

$\beta = 1.72^\circ$ for 3% grade →

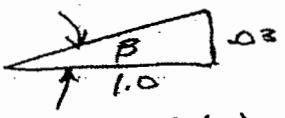

$\beta = \tan^{-1}\left(\frac{.03}{1}\right)$

$= 1.72^\circ$

$\alpha = 90^\circ$

$\delta = 22^\circ \pm$ (for silty sandy gravel mixture to gravel/sand mix; Ref: Bowles, 2nd ed. Found Analysis + Design Table 11-6

$\phi = 34^\circ$

an employee-owned company

WESTON SOLUTIONS

SHEET 9 of ____

CLIENT/SUBJECT _____ W.O. NO. _____

TASK DESCRIPTION _____ TASK NO. _____

PREPARED BY _____ DEPT _____ DATE _____

MATH CHECK BY _____ DEPT _____ DATE _____

METHOD REV. BY _____ DEPT _____ DATE _____

APPROVED BY _____ DEPT _____ DATE _____

- From spreadsheet on pg 10

$K_A = .259$

$$\therefore K_{ST} = \frac{K_O + K_A}{2} = \frac{.441 + .259}{2} = .350$$

$$\& \ \gamma_{E_{ST}} = K_{ST}\gamma_T = .350(130\,pcf) = 45.5\,pcf$$

equiv fluid wt. of soil (static conditions)

∴ For global stability analyses & structural design of concrete wall under static stability scenario:

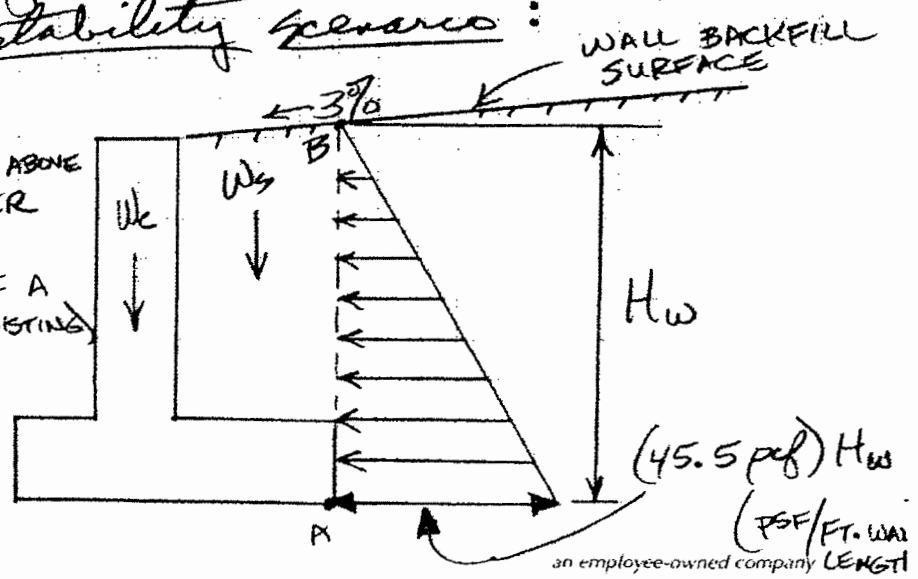

NOTE: WT. OF SOIL ABOVE HEEL OF CANTILEVER WALL (W_s) CAN BE CONSIDERED TO BE A STABILIZING (ie. RESISTING) FORCE FOR WALL GLOBAL STABILITY ANALYSES

an employee-owned company

TCPI
436 Creamery Way Suite 100
Exton, PA 19341
610-524-1357

Standard Calculation Sheet
Subject:
Los Alamos Retaining Wall
M-O Equation

Date: 5/24/2005 5:20 PM
Coulomb Ka Calculation.mcd

$\phi := 34 \cdot deg \quad \beta := 1.72 \cdot deg \quad \delta := 22 \cdot deg \qquad \alpha := 90 \cdot deg$

$$K_a := \frac{(\sin(\alpha + \phi))^2}{(\sin(\alpha))^2 \cdot \sin(\alpha - \delta) \cdot \left(1 + \sqrt{\frac{\sin(\phi + \delta) \cdot \sin(\phi - \beta)}{\sin(\alpha - \delta) \cdot \sin(\alpha + \beta)}}\right)^2} \qquad K_a = 0.259$$

The Mononobe-Okabe Equation

$K_h := .090 \quad \theta := \operatorname{atan}(K_h) \quad \theta = 0.09 \quad \theta' := \theta \cdot deg \quad \theta' := \theta \cdot \frac{1}{deg} \quad \theta' = 5.143$

$\theta' := \theta$

$$K_{AE} := \frac{(\sin(\alpha + \theta' - \phi))^2}{(\sin(\alpha))^2 \cdot \sin(\alpha + \theta' + \delta) \cdot \left(1 + \sqrt{\frac{\sin(\phi + \delta) \cdot \sin(\phi - \theta' - \beta)}{\sin(\alpha + \delta + \theta') \cdot \sin(\alpha - \beta)}}\right)^2 \cdot \cos(\theta')} \qquad K_{AE} = 0.317$$

$\Delta K_{AE} := K_{AE} - K_a \qquad \Delta K_{AE} = 0.058$

WESTON SOLUTIONS

SHEET 11 of ___

CLIENT/SUBJECT ___ W.O. NO. ___

TASK DESCRIPTION ___ TASK NO. ___

PREPARED BY ___ DEPT ___ DATE ___

MATH CHECK BY ___ DEPT ___ DATE ___

METHOD REV. BY ___ DEPT ___ DATE ___

APPROVED BY ___ DEPT ___ DATE ___

& $FS_{STATIC} \geq 1.50$ for both sliding & overturning global stability analyses (Ref: IBC 2003 Section 1806.1)

2.) SEISMIC STABILITY CONDITION

Also consistent with discussion on pg 3, develop lateral earth pressure diagram for this case assuming that the appropriate lateral earth pressure coefficient (K_{SE}) is the average of the K_O & K_A values under seismic loads.

i.e. $$K_{SE} = \frac{K_{OE} + K_{AE}}{2}$$

where K_{OE} = at-rest LEP coefficient under seismic load

K_{AE} = active LEP coefficient under seismic load

K_{AE} is calculated from the Mononobe Okabe eqn. as follows (see App B, REF. #1):

04P-0685

an employee-owned company

WESTON SOLUTIONS

SHEET 12 of ___

CLIENT/SUBJECT _____ W.O. NO. _____

TASK DESCRIPTION _____ TASK NO. _____

PREPARED BY _____ DEPT _____ DATE _____

MATH CHECK BY _____ DEPT _____ DATE _____

METHOD REV. BY _____ DEPT _____ DATE _____

APPROVED BY _____ DEPT _____ DATE _____

$$K_{AE} = \frac{\sin^2(\alpha - \phi + \theta')}{\sin^2\alpha \cos\theta' \sin(\alpha + \theta' + \delta)\left[1 + \sqrt{\frac{\sin(\phi+\delta)\sin(\phi-\theta'-\beta)}{\sin(\alpha+\delta+\theta')\sin(\alpha-\beta)}}\right]}$$

where α, ϕ, δ + β are defined as above & θ'

$$\theta' = \tan^{-1}\left(\frac{K_H}{1-K_V}\right) = \tan^{-1}(K_H)$$

for $K_V = 0$ as typically assumed

& $K_H = \frac{S_{DS}}{2.5} = .40 S_{DS} = .40(.22g)$

$= .09g$

SEE APP. B, REF. #2

+ K_H (MONONOBE OKABE EQN) $= \frac{.09g}{g} = .09$

$\therefore \theta' = \tan^{-1}(.09) = 5.14°$

& from spreadsheet on pg 10:

$K_{AE} = .317$ (increased from .259)

04P-0685

an employee-owned company

WESTON SOLUTIONS

SHEET 13 of ____

CLIENT/SUBJECT _____ W.O. NO. _____

TASK DESCRIPTION _____ TASK NO. _____

PREPARED BY _____ DEPT _____ DATE _____

MATH CHECK BY _____ DEPT _____ DATE _____

METHOD REV. BY _____ DEPT _____ DATE _____

APPROVED BY _____

DEPT _____ DATE _____

Also $K_{OE} \approx 2 K_{AE}$ for retaining walls founded on rock with soil backfill (See App C (FEMA document))

$\therefore K_{OE} = 2(.317) = .634$ (was from .44)

& $K_{SE} = \frac{K_{AE} + K_{OE}}{2} = \frac{.317 + .634}{2}$

$= .476$ (was from .350)

& $\gamma_{E_{SE}} = K_{SE} \gamma_T = .476 (130 \text{ pcf})$

$= 61.9$ pcf

Say 62 pcf

equiv. fluid wt. of soil (seismic conditions)

an employee-owned company

WESTON SOLUTIONS

SHEET 14 of ___

CLIENT/SUBJECT _____ W.O. NO. _____

TASK DESCRIPTION _____ TASK NO. _____

PREPARED BY _____ DEPT _____ DATE _____

MATH CHECK BY _____ DEPT _____ DATE _____

METHOD REV. BY _____ DEPT _____ DATE _____

APPROVED BY _____ DEPT _____ DATE _____

∴ For global stability analyses & structural design of concrete wall under seismic stability scenario:

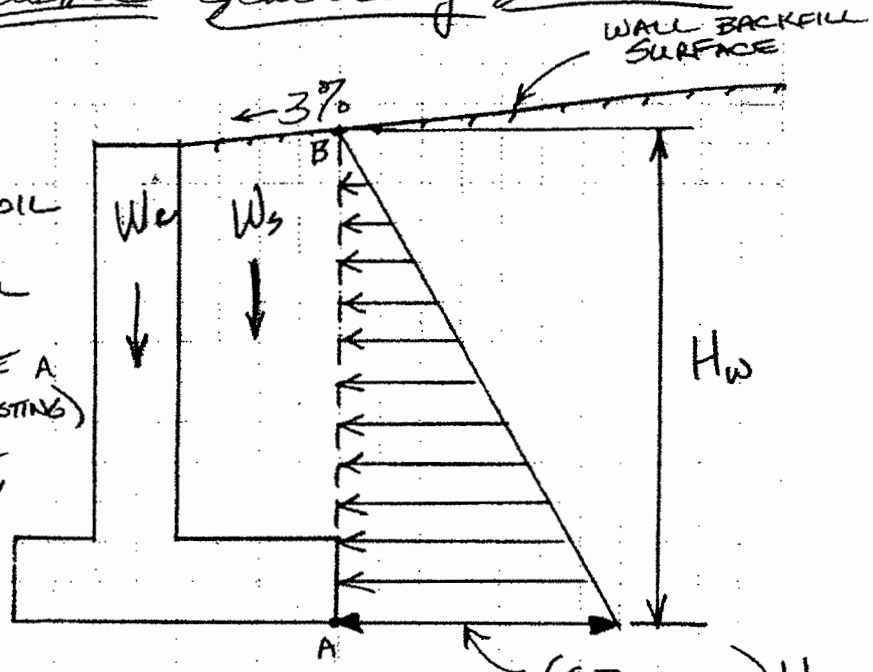

NOTE: WT. OF SOIL ABOVE HEEL OF CANTILEVER WALL (W_s) CAN BE CONSIDERED TO BE A STABILIZING (i.e. RESISTING) FORCE FOR WALL GLOBAL STABILITY ANALYSES

& $FS_{SEISMIC} \geq 1.10$ for both sliding & overturning global stability analyses

WESTON SOLUTIONS

SHEET 15 of ___

CLIENT/SUBJECT ___ W.O. NO. ___

TASK DESCRIPTION ___ TASK NO. ___

PREPARED BY ___ DEPT ___ DATE ___

MATH CHECK BY ___ DEPT ___ DATE ___

METHOD REV. BY ___ DEPT ___ DATE ___

APPROVED BY ___ DEPT ___ DATE ___

Above equivalent fluid pressure values should be used to quantify the seismic stability condition as follows:

1.) Resolve triangular pressure diagram of pg. 9 based on a 45.5 pcf equivalent fluid weight into a resultant force for the static stability condition (P_{ST}).

2.) Resolve the triangular pressure diagram of pg. 14 based on a 62.0 pcf equivalent fluid weight into a resultant force for the seismic stability condition (P_{SE}).

3.) Calculate $\Delta P_1 = P_{SE} - P_{ST}$

4.) Calculate $\Delta P_2 = K_H \gamma H_w^2$ (see Appx Ref #2)

where $K_H = .09$ (see pg 12)

$\gamma = 130$ pcf

5.) Select ΔP = greater of ΔP_1 & ΔP_2

WESTON SOLUTIONS

SHEET 16 of ___

CLIENT/SUBJECT _____ W.O. NO. _____

TASK DESCRIPTION _____ TASK NO. _____

PREPARED BY _____ DEPT _____ DATE _____

MATH CHECK BY _____ DEPT _____ DATE _____

METHOD REV. BY _____ DEPT _____ DATE _____

APPROVED BY _____ DEPT _____ DATE _____

6.) P_{ST} is applied to the back of the cantilever wall (i.e. line AB on pg. 9 & 14 sketches) at an angle $\delta = 22°$ above horizontal at a distance $H_w/3$ above bottom of wall footing for sliding & overturning analyses, and:

7.) ΔP is applied to the back of the cantilever wall (i.e. line AB on pg 9 + 14 sketches) at an angle $\delta = 22°$ above horizontal at a distance 0.6H above bottom of wall footing for sliding & overturning stability analyses.

That is:

WESTON SOLUTIONS

SHEET 17 of ____

CLIENT/SUBJECT _____ W.O. NO. _____

TASK DESCRIPTION _____ TASK NO. _____

PREPARED BY _____ DEPT _____ DATE _____

MATH CHECK BY _____ DEPT _____ DATE _____

METHOD REV. BY _____ DEPT _____ DATE _____

APPROVED BY _____ DEPT _____ DATE _____

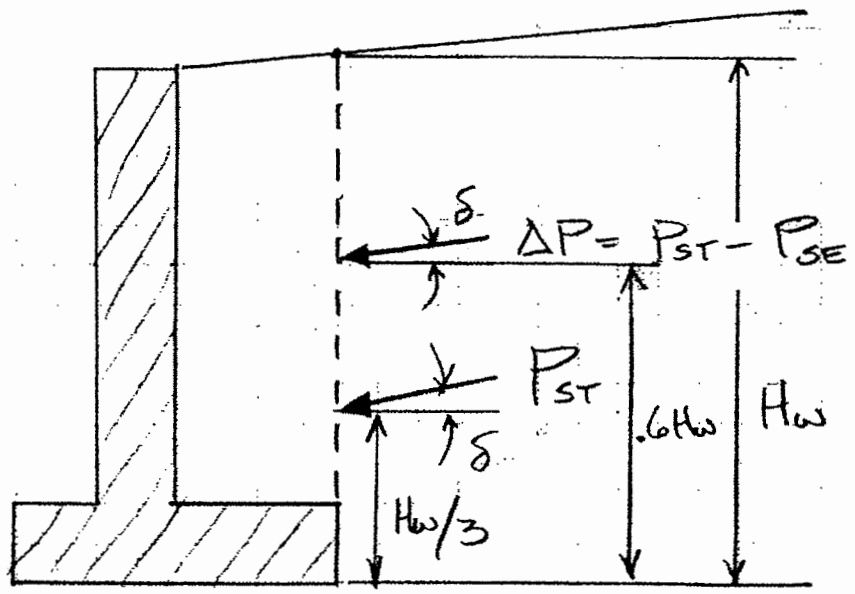

Also, more conservative wall geometry parameters (e.g. stem & footing thicknesses etc.) as determined from static and seismic global stability analyses (sliding, overturning, etc.) shall be selected for wall construction.

WESTON SOLUTIONS

SHEET 16 of ____

CLIENT/SUBJECT _____ W.O. NO. _____

TASK DESCRIPTION _____ TASK NO. _____

PREPARED BY _____ DEPT _____ DATE _____

MATH CHECK BY _____ DEPT _____ DATE _____

METHOD REV. BY _____ DEPT _____ DATE _____

APPROVED BY _____ DEPT _____ DATE _____

II.) MSE Wall

- wall to be designed by Contractor selected Engineer via a performance specification consistent with established MSE wall design procedures + protocol. Both static and seismic internal + external stability conditions shall be considered and satisfied using appropriate + acceptable FS values. Seismic stability condition shall be evaluated assuming

$K_H = .138g$

$K_V = 0g$

see App D. for calcs.

WLD 5/25/06

WESTON SOLUTIONS

SHEET ____ of ____

CLIENT/SUBJECT _____ W.O. NO. _____

TASK DESCRIPTION _____ TASK NO. _____

PREPARED BY _____ DEPT _____ DATE _____

MATH CHECK BY _____ DEPT _____ DATE _____

METHOD REV. BY _____ DEPT _____ DATE _____

APPROVED BY

_____

DEPT _____ DATE _____

APPENDIX A

Sieve Sizes	Percent Passing		
	I	II	OGBC
25 mm (1 in.)	100	100	100
19 mm (3/4 in.)	80–100	85–100	90–100
9.5 mm (3/8 in.)	—	—	20–55
4.75 mm (No. 4)	30–60	40–70	0–10
2.0 mm (No. 10)	20–45	30–55	—
75 µm (No. 200)	3–10	4–12	0–2
2FF*	50% or More	50% or More	100%

* Fractured faces tests shall be performed on the material retained on the 4.75-mm (No. 4) sieve. The retained material shall have at least two fractured faces as evaluated by NMSHTD Method FF-1, "Fractured Face Determination for Coarse Aggregate."

Type I and Type II aggregate shall have an Aggregate Index of 35 or less when calculated in accordance with Section 910. The liquid limit shall be 25 or less and the plastic index shall be six or less.

OGBC shall have an Aggregate Index of 35 or less when calculated in accordance with Section 910.

When RAP is used, the requirements for the Aggregate Index shall apply to the extracted aggregate. When RAP is used in combination with untreated aggregate, the Aggregate Index shall be determined separately for each and each shall comply with the specification requirements.

NEW MEXICO TYPE I AGGREGATE

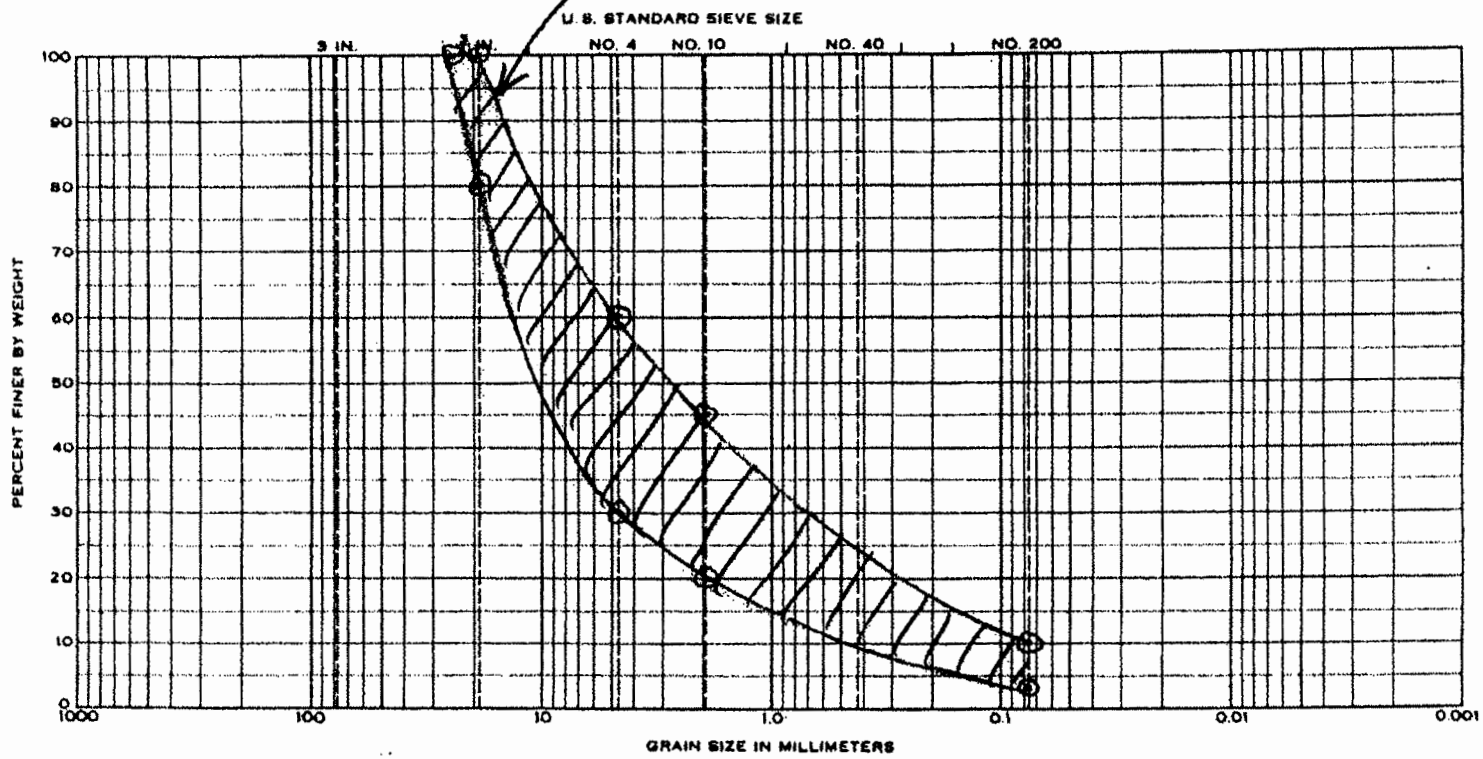

COBBLES	GRAVEL		SAND			SILT OR CLAY
	Coarse	Fine	Coarse	Medium	Fine	

Sample No.	Elev or Depth	Classification	NatWC	LL	PL	PI	

Project

Date

GRADATION CURVES

WESTON SOLUTIONS

SHEET ____ of ____

CLIENT/SUBJECT _____ W.O. NO. _____

TASK DESCRIPTION _____ TASK NO. _____

PREPARED BY _____ DEPT _____ DATE _____

MATH CHECK BY _____ DEPT _____ DATE _____

METHOD REV. BY _____ DEPT _____ DATE _____

APPROVED BY _____

DEPT _____ DATE _____

APPENDIX B

7. EARTHQUAKE (SEISMIC) DESIGN

Earthquake (Seismic) Loading

Texts that address seismic design of retaining walls (e.g. Bowles, Kramer) acknowledge that seismic design of retaining walls is a highly complex issue, compounded by the assumptions that must be made to establish reasonable design guidelines. This is still an emerging science and geotechnical reports usually give only the peak ground acceleration applicable to the location and leave the application of this information to the designer.

Even the necessity of seismic design of retaining walls is arguable, considering compensating safety factors (e.g. 1.5 overturning safety factor). Earthquake caused retaining wall failures from which to obtain mode-of-failure lessons are very rare (waterfront structures excepted). It is also argued that since retaining walls are often at a distance from structures that would be affected by their failure and thus are not a life-safety issue. However, these arguments are moot considering the mandatory language of IBC and ASCE 7.

IBC 2003, Section 1622.1.2, refers to and modifies ASCE 7 to read as follows:

> ' . . . This section applies to all earth retaining walls. The applied seismic forces shall be determined in accordance with Section 9.7.5.1 *[This section states that "... the owner shall submit to the authority having jurisdiction a written report that includes an evaluation of the items in Section 9.7.4.1 and the lateral pressures on basement and retaining walls due to earthquake motions". Section 9.7.4.1identifies items to be included in the geotechnical report to be submitted ", when required by the authority having jurisdiction"]*

This clearly requires a seismic analysis of "earth retaining structures", based upon a geotechnical report, but implies some discretionary latitude by the "authority having jurisdiction".

The Uniform Building Code (UBC '97) and the California Building Code (CBC '01) do not appear to specifically require seismic design of "earth retaining structures" unless the requirements for "non-buildng structures" in CBC '01 could be so interpreted.

REF. # 1

Check applicable local and state codes that may have specific seismic design requirements for retaining walls.

The Mononobe-Okabe equations

Of the many investigations of dynamic forces on retaining walls, one of the most important and influential is an ASCE paper titled *Design of Earth Retaining Structures for Dynamic Loads*, by Seed and Whitman, delivered at a 1970 Cornell University conference. In this paper they cited the pioneering studies by Mononobe (1929) and Okabe (1926), widely referenced today. Another contribution was a subsequent ASCE paper by Robert Whitman titled, *Seismic Design and Behavior of Gravity Retaining Walls*, 1990. They considered this lateral force to be an inverted triangular wedge of soil behind the wall. Seed-Whitman proposed a simplified formula, based upon the Mononobe-Okabe theory, for the combined static and seismic factor, which they termed K_{AE}, to be applied to this wedge acting against the wall. This was an adaptation of the Coulomb formula to calculate the total (seismic and static) pressure and introduced the variable θ, which is defined as the angle whose tangent is the ground acceleration ($\theta = \tan^{-1} k_h$).

This equation is presented in **Figure 7-1.**

K_{AE} = active earth pressure coefficient

$$= \frac{\sin^2(\alpha + \theta - \phi')}{\cos\theta' \sin^2\alpha \sin(\alpha + \theta' + \delta)\left[1 + \sqrt{\frac{\sin(\phi + \delta)\sin(\phi - \theta' - \beta)}{\sin(\alpha + \delta + \theta')\sin(\alpha - \beta)}}\right]^2}$$

Where $\theta = \tan^{-1} K_h$, α = wall slope to horiz. (90° for a vertical face), φ = angle of internal friction, β = backfill slope, and δ = wall friction angle.
The horizontal component is $K_{AE} \cos\delta$.

For a vertical wall face and δ assumed to be $\phi/2$,this becomes:

$$K_{AE} = \frac{\sin^2(90+\theta-\phi)}{\cos\theta \sin^2(90+\theta+\phi/2)\left[1+\sqrt{\frac{\sin 1.5\phi \sin(\phi-\theta-\beta)}{\sin(90+\phi/2+\theta)\sin(90+\beta)}}\right]^2}$$

The total force (active and earthquake), $P_{AE} = \frac{1}{2}(\gamma) K_{AE} H^2$ where γ = soil density and H = retained height.

Figure 7-1. ***Mononobe-Okabe Equation***

When the acceleration is zero, $k_h = 0$, and K_{AE} becomes the familiar Coulomb K_A formula.

Also, note that passive the pressure coefficient decreases under seismic conditions.

The passive earth pressure coefficient, K_{PE} is:

$$K_{PE} = \frac{\sin^2(\alpha-\theta+\phi')}{\cos\theta' \sin^2\alpha \sin(\alpha+\theta'+\delta)\left[1+\sqrt{\frac{\sin(\phi+\delta)\sin(\phi-\theta'+\beta)}{\sin(\alpha+\delta+\theta')\sin(\alpha-\beta)}}\right]^2}$$

K_{AE} is thus two components (seismic and static). The seismic component (K_{AE} - K_A) is assumed to be an inverted, near-triangular trapezoid force (maximum at the ground surface) acting at a height of 0.6 H. For stem design, H is the height from top of footing to retained height. For overturning and sliding, H is the height at the back face of the footing, along a virtual vertical plane from the bottom of the footing to its intersection with the backfill grade.

The K_A component is the familiar triangular distribution acting at H / 3.

The height to the combined resultant can be obtained by the formula:

$$\bar{x} = \frac{P_A (H/3) + (P_{AE} - P_A)\, 0.6H}{P_{AE}}$$

The direction of force application, per the Coulomb formula, is assumed to be inclined at an angle (from horizontal) equal to the friction angle at the back face of the stem, δ, which is often assumed to be $\phi/2$. Therefore, the horizontal components can be assumed to be

$$P_{AE\,horiz.} = \cos\left(\phi/2\right) P_{AE}.$$

A simple approach to the design for seismic is suggested by the overlapping force triangles, which tend to combine into a nearly uniform load over the height of the wall, if the height of the resultant is 0.5H.

Therefore, $w = \frac{K_{AE}\, \gamma H^2}{2H} = 0.5\, K_{AE}\, \gamma\, H$, where w is the equivalent uniform lateral static plus seismic force. This simplification, while approximate, is particularly helpful for checking stem moments and shears at various heights.

Seed and Whitman suggest an approximation of $K_{AE} = K_A + 0.75\, k_h$. If, for example, k_h is 0.30 and $K_A = 0.27$, then K_{AE} approximate would be 0.495. This would suggest an 83% increase over static K_A. However, the stem moments and overturning are greatly increased since $0.75\, k_h$ act at an assumed height of 0.60H. Some geotechnical engineers use this method to give an added uniform seismic force over the full retained height with resultant acting at 0.6H. Such a requirement, therefore, might read "for seismic design add a uniform lateral force $= 20\, H^2$ with the resultant applied at 0.6H.

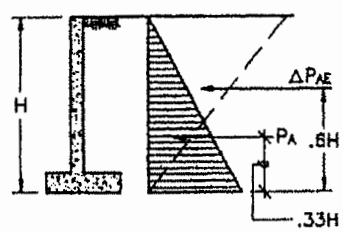

Figure 7-2. *Application of Seed Whitman Method*

Seed and Whitman's paper commented that few building codes (at that time) required seismic provisions for retaining walls, and concluded that the factors of safety for static design, which are generally around 1.5, are adequate to protect the wall for short term seismic forces, since such forces would merely reduce the safety factor to an acceptable value greater than 1.0.

NAVFAC for Seismic Zone 4 (UBC '97) requires, in addition to static force, 20% of the total active pressure and 20% of the wall weight, acting at 2/3 the height. It further comments that the one-third stress increase for short-term loading should more than compensate for the added seismic stresses.

AASHTO contains seismic design guidance for retaining walls in their Section 6 of Division I-A.

Determining k_h

k_h is the ground acceleration factor used in the Mononobe-Okabe (M-O) equation to compute lateral seismic earth pressure in cantilevered retaining walls.

This is a design value and not necessarily the most severe acceleration that could occur at the site. Unless an arbitrarily reduced value of k_h is used, one-third to one-half the peak ground acceleration is often used (see Kramer and others).

i.e. .33 → .50 (PGA)

→ $\frac{1}{2.5}$ = .40 IS WITHIN THIS RANGE

The starting point is to determine the peak acceleration applicable to your design. Assuming your code is IBC 2003, or ASCE 7-02, which has identical charts (UBC '97 will be discussed later), select from the contours the Maximum Considered Earthquake (MCE) ground motion for 0.2 second, spectral response acceleration at 5% of critical damping. Note that retaining walls are "short period", hence the 0.2 second selection.

There is an easier way. Go to http://eqhazmaps.usgs.gov This is a U.S. Geological Survey address. Just enter your zip code (but latitude and longitude is more accurate). For example, Newport Beach, California, zip code 92660, gives 127.4 percent "g", or 1.274. These maps are somewhat different from IBC maps and the latter are preferred and a zoom-capable CD is available from IBC.

Here is an example procedure for obtaining a design K_h using the USGS Hazard Maps:

From charts, $S_s = 1.274$
(All terms defined in referenced codes)

$S_{MS} = F_a S_s$

$F_a = 1.0$ (This is a function of soil characteristics and value of S_s. See Table 1615.1.2 in IBC).

$\therefore \quad S_{MS} = 1.0 \times 1.274 = 1.274$

$S_{DS} = \beta S_{MS} = 0.667 \times 1.274 = 0.85$

Per ASCE 7.02 Provisions Sec. 7.5.3:

$$K_h = \frac{S_{SD}}{2.5} = 0.40 \times 0.85 = 0.34$$

(Note that this is about one-fourth MCE) Note also that the above example value of k_h is nearly the same as could be obtained using simplified base shear equation 16-56 with R = 3.0.

Alternately, using UBC '97 and/or CBC '01:

Derive K_h from base shear, V, for non-building structure. (Terms defined in UBC '97 and CBC '01).

$$V = \frac{2.5 C_a I}{R} W \quad \text{Assume } R = 3.0$$

For example design: $C_a = 0.40$, $I = 1.0$

$$\therefore \quad V = \frac{2.5 \times 0.40 \times 1.0}{3.0} W = 0.33\ W$$

This suggests $K_h = 0.33 \cong 0.34$ per IBC.

Simplified Seismic Force Application

The NEHRP 2000 Part 2 –Commentary states Seed and Whitman's proposed simpler approximation:

$\Delta K_{AE} \sim (3/4)\ k_h \qquad \therefore \Delta P_{AE} \sim (1/2)\gamma H^2 (3/4) k_h \sim (3/8) k_h \gamma H^2$

k_h is the peak ground acceleration modified per Provisions Sec. 7.5.3:

where $k_h = S_{DS} / 2.5$

Base moments, using this simplification, are therefore:

$$M_{AEbase} = P_A (H/3) + (\Delta P_{AE}) (0.6\ H)$$
$$= \gamma H^3 (0.17\ K_a + 0.225\ k_h)$$

An observation from this is that the base moments from static and dynamic (seismic) are equal when $k_h \sim 0.75\ K_A$

An arguable issue: If the seismic component is considered a factored force, and since overturning and soil pressure are based upon un-factored forces (E/1.4), should the seismic component be reduced by 0.71?

Vertical Distribution of Seismic Force on Stem

Here is a simplified method for assuming a uniformly applied force to the stem:

Since $P_{AE} = P_A + \Delta P_{AE}$

$$P_{AE} \cong \frac{\gamma H^2}{2} (.75\ k_h) \cong .375\ k_h\ \gamma H^2$$

$$P_A = \frac{K_a \gamma H^2}{2}$$

Total force on stem: $P_A + \Delta P_{AE} = .5 K_a \gamma H^2 + .375\ k_h \gamma H^2$

If resultant acts at 0.5 H, the uniform lateral on stem

$$= \frac{.5 K_a\ \gamma\ H^2 + .375\ K_h\ \gamma\ H^2}{H} = (.5\ K_a + .375\ k_h)\ (\gamma H)$$

For design example, assuming $K_a = 0.35$, $k_h = .34$, $\gamma = 120$

$F_P = 36H$

Note that this simplified formula is <u>not valid</u> if there is a <u>sloped backfill</u> that will significantly increase seismic forces.

Seismic for Stem Self-weight

This is an arguable issue; whether to include the seismic force due to self-weight of the wall acting simultaneously with the seismic due to earth pressure. It does not appear to be defined in the codes. AASHTO, however, in 5.5.4 states: "*...seismic design forces should account for wall inertia forces in addition to the equivalent static force, where a wall supports a bridge structure...*". But section 5.6.4, referring to flexible cantilever walls, states that "*Forces resulting from wall inertia effects may be ignored in estimating the seismic lateral earth pressure*".

Judgment indicates that seismic self-weight should be applied simultaneously with seismic due to earth pressure.

Using ASCE 7-02, Section 9.6.1.3:

F_P in equation 9.6.1.3-1, for cantilevered wall and assuming Ip = 1.0,

Reduces to: $Fp = 0.4\ S_{DS}\ W_p$

Per above design example where $S_{DS} = 0.85$,:

$$F_P = 0.4 \times 0.85 \times 1.0\ W_P = 0.34\ W_P$$

Using the UBC '97 method:

$$F_P = \frac{a_P C_a I_P}{R_p}\left(1 + \frac{h_x}{h_r}\right) W_P$$

$$a_P = 1.0,\ R_P = 3.0,\ \frac{h_x}{h_r} = 0 \text{ at bottom and } 1.0 \text{ at top.}$$

F_p minimum is $0.7\ C_a\ I_p\ W_p$

F_p for design is average between top and bottom

$$\therefore F_P = (1.33 + 0.70) / 2 = 1.015 * [\ C_a I_P W_P\ ]$$

For example design, $C_a = 0.44$, $I_P = 1.0$

$$\therefore F_P = 0.45\ W_P$$

to provide a displacement ductility of approximately 4. Beyond the potential plastic hinge region, the curvature ductility demand is not considered to exceed that provided by the nominal moment capacity of the section for non-earthquake loads.

7.4.4.4 Precast (non-prestressed) concrete piles. For precast concrete piles, the longitudinal reinforcement is specified to extend the full length of the pile so there is no need to determine the flexural length. Transverse reinforcement spacing within the potential plastic hinge zone is required for the length of three pile diameters at the bottom of pile cap. Particular attention should be taken where piles cannot be driven to or are overdriven beyond the anticipated end bearing point elevation. The transverse reinforcement size and spacing in this region is the same as the uncased concrete pile. Transverse reinforcement spacing outside the potential plastic hinge zone is specified to be no greater than 8 inches to conform with current building code minimums for this pile type.

7.4.4.5 Precast-prestressed piles. The transverse reinforcement requirements are primarily taken from the PCI Committee Report (1993) on precast prestressed concrete piling for geographic regions subject to low to moderate ground motions. The amount of transverse reinforcement was relaxed for the pile region greater than 20 feet (6m) below the pile cap to one-half of that required above. It was judged that the reduced transverse reinforcement would be sufficient to resist the reduced curvature demands at that point. Particular attention should be taken where piles cannot be driven to or are overdriven beyond the anticipated end bearing point elevation so that the length of the confining transverse reinforcement is maintained.

Equation (7.4-1), originally from ACI 318, has always been intended to be a lower bound spiral transverse reinforcement ratio for larger diameter columns. It is independent of the member section properties and can therefore be applied to large or small diameter piles. For cast-in-place piles and prestressed concrete piles, the resulting spiral reinforcement ratios from this formula are considered to be sufficient to provide moderate ductility capacities.

High strength hard drawn wire with higher yield strengths is permitted to be used for transverse circular spiral reinforcement of precast prestressed concrete piles. Pile test specimens using this type of transverse reinforcement include the research done by Park and Hoat Joen (1990). High strength hard drawn wire has yield strengths between 150 and 200 ksi. f_{yh} is conservatively limited to 85 ksi for this steel because hard drawn wire has limited ductility.

7.5 SEISMIC DESIGN CATEGORIES D, E, AND F

For Seismic Design Category D, E, or F construction, all the preceding provisions for Seismic Design Category C applies for the foundations, but the earthquake detailing is generally more severe and demanding.

7.5.1 Investigation. In addition to the potential site hazards discussed in *Provisions* Sec. 7.4.1, consideration of lateral pressures on earth retaining structures shall be included in investigations for Seismic Design Categories D, E, and F.

Earth retaining structures. Increased lateral pressures on retaining structures during earthquakes have long been recognized; however, design procedures have not been prescribed in U.S. model building codes. Waterfront structures often have performed poorly in major earthquake due to excess pore water pressure and liquefaction conditions developing in relatively loose, saturated granular soils. Damage reports for structures away from waterfronts are generally limited with only a few cases of stability failures or large permanent movements (Whitman, 1991). Due to the apparent conservatism or overstrength in static design of most walls, the complexity of nonlinear dynamic soil-structure interaction, and the poor understanding of the behavior of retaining structures with cohesive or dense granular soils, Whitman (1991) recommends that "engineers must rely primarily on a sound understanding of fundamental principles and of general patterns of behavior."

REF. #2

Seismic design analysis of retaining walls is discussed below for two categories of walls: "yielding" walls that can move sufficiently to develop minimum active earth pressures and "nonyielding" walls that do not satisfy this movement condition. The amount of movement to develop minimum active pressure is very small. A displacement at the top of the wall of 0.002 times the wall height is typically sufficient to develop the minimum active pressure state. Generally, free-standing gravity or cantilever walls are considered to be yielding walls (except massive gravity walls founded on rock), whereas building basement walls restrained at the top and bottom are considered to be nonyielding.

KA WALLS

Yielding walls. At the 1970 Specialty Conference on Lateral Stresses in the Ground and Design of Earth Retaining Structures, Seed and Whitman (1970) made a significant contribution by reintroducing and reformulating the Monobe-Okabe (M-O) seismic coefficient analysis (Monobe and Matsuo, 1929; Okabe, 1926), the earliest method for assessing the dynamic lateral pressures on a retaining wall. The M-O method is based on the key assumption that the wall displaces or rotates outward sufficiently to produce the minimum active earth pressure state. The M-O formulation is expressed as:

$$P_{AE} = (1/2)\gamma H^2 (1 - k_v) K_{AE} \tag{C7.5-1}$$

where: P_{AE} is the total (static + dynamic) lateral thrust, γ is unit weight of backfill soil, H is height of backfill behind the wall, k_V is vertical ground acceleration divided by gravitational acceleration, and K_{AE} is the static plus dynamic lateral earth pressure coefficient which is dependent on (in its most general form) angle of friction of backfill, angle of wall friction, slope of backfill surface, and slope of back face of wall, as well as horizontal and vertical ground acceleration. The formulation for K_{AE} is given in textbooks on soil dynamics (Prakash, 1981; Das, 1983; Kramer, 1996) and discussed in detail by Ebeling and Morrison (1992).

Seed and Whitman (1970), as a convenience in design analysis, proposed to evaluate the total lateral thrust, P_{AE}, in terms of its static component (P_A) and dynamic incremental component (ΔP_{AE}):

$$P_{AE} = P_A + \Delta P_{AE} \tag{C7.5-2a}$$

or

$$K_{AE} = K_A + \Delta K_{AE} \tag{C7.5-2b}$$

or

$$\Delta P_{AE} = (1/2)\gamma H^2 \Delta K_{AE} \tag{C7.5-2c}$$

Seed and Whitman (1970), based on a parametric sensitivity analysis, further proposed that for practical purposes:

$$\Delta K_{AE} = (3/4) K_h \tag{C7.5-3a}$$

$$\Delta P_{AE} = (1/2)\gamma H^2 (3/4) k_h = (3/8) k_h \gamma H^2 \tag{C7.5-3b}$$

where k_h is horizontal ground acceleration divided by gravitational acceleration. It is recommended that k_h be taken equal to the site peak ground acceleration that is consistent with design earthquake ground motions as determined in *Provisions* Sec. 7.5.2 (that is, $k_h = S_{DS}/2.5$). Eq. C7.5-3a and C7.5-3b generally are referred to as the simplified M-O formulation.

Since its introduction, there has been a consensus in geotechnical engineering practice that the simplified M-O formulation reasonably represents the dynamic (seismic) lateral earth pressure increment for yielding retaining walls. For the distribution of the dynamic thrust, ΔP_{AE}, Seed and Whitman (1970) recommended that the resultant dynamic thrust act at $0.6H$ above the base of the wall (that is, inverted trapezoidal pressure distribution).

Using the simplified M-O formulation, a yielding wall may be designed using either a limit-equilibrium force approach (conventional retaining wall design) or an approach that permits movement of the wall up to tolerable amounts. Richards and Elms (1979) introduced a method for seismic design analysis of

yielding walls considering translational sliding as a failure mode and based on tolerable permanent displacements for the wall. There are a number of empirical formulations for estimating permanent displacements under a translation mode of failure; these have been reviewed by Whitman and Liao (1985). Nadim (1980) and Nadim and Whitman (1984) incorporated the failure mode of wall tilting as well as sliding by employing coupled equations of motion, which were further formulated by Siddharthan et al. (1992) as a design method to predict the seismic performance of retaining walls taking into account both sliding and tilting. Alternatively, Prakash and others (1995) described design procedures and presented design charts for estimating both sliding and rocking displacements of rigid retaining walls. These design charts are the results of analyses for which the backfill and foundation soils were modeled as nonlinear viscoelastic materials. A simplified method that considers rocking of a wall on a rigid foundation about the toe was described by Steedman and Zeng (1996) and allows the determination of the threshold acceleration beyond which the wall will rotate. A simplified procedure for evaluating the critical threshold accelerations for sliding and tilting was described by Richards and others (1996).

Application of methods for evaluating tilting of yielding walls has been limited to a few case studies and back-calculation of laboratory test results. Evaluation of wall tilting requires considerable engineering judgment. Because the tilting mode of failure can lead to instability of a yielding retaining wall, it is suggested that this mode of failure be avoided in the design of new walls by proportioning the walls to prevent rotation in order to displace only in the sliding mode.

Ko WALLS

Nonyielding walls. Wood (1973) analyzed the response of a rigid nonyielding wall retaining a homogeneous linear elastic soil and connected to a rigid base. For such conditions, Wood established that the dynamic amplification was insignificant for relatively low-frequency ground motions (that is, motions at less than half of the natural frequency of the unconstrained backfill), which would include many or most earthquake problems.

For uniform, constant k_h applied throughout the elastic backfill, Wood (1973) developed the dynamic thrust, ΔP_E, acting on smooth rigid nonyielding walls as:

$$\Delta P_E = F k_h \gamma H^2 \qquad \text{(C7.5-4a)}$$

The value of F is approximately equal to unity (Whitman, 1991) leading to the following approximate formulation for a rigid nonyielding wall on a rigid base:

$$\Delta P_E = k_h \gamma H^2 \qquad \text{(C7.5-4b)}$$

As for yielding walls, the point of application of the dynamic thrust is taken typically at a height of $0.6H$ above the base of the wall.

It should be noted that the model used by Wood (1973) does not incorporate any effect on the pressures of the inertial response of a superstructure connected to the top of the wall. This effect may modify the interaction between the soil and the wall and thus modify the pressures from those calculated assuming a rigid wall on a rigid base. The subject of soil-wall interaction is addressed in the following sections. This section also provides further discussion on the applicability of the Wood and the M-O formulations.

7.5.2 **Soil-structure-interaction approach and modeling for wall pressures.** Lam and Martin (1986), Soydemir and Celebi (1992), Veletsos and Younan (1994a and 1994b), and Ostadan and White (1998), among others, argue that the earth pressures acting on the walls of embedded structures during earthquakes are primarily governed by soil-structure interaction (SSI) and, thus, should be treated differently from the concept of limiting equilibrium (that is, M-O method). Soil-structure interaction includes both a kinematic component—the interaction of a massless rigid wall with the adjacent soil as modeled by Wood (1973)—and an inertial component—the interaction of the wall, connected to a responding superstructure, with the adjacent soil. Detailed SSI analyses incorporating kinematic and inertial interaction may be considered for the estimation of seismic earth pressures on critical walls.

WESTON SOLUTIONS

SHEET ____ of ____

CLIENT/SUBJECT _____ W.O. NO. _____

TASK DESCRIPTION _____ TASK NO. _____

PREPARED BY _____ DEPT _____ DATE _____

MATH CHECK BY _____ DEPT _____ DATE _____

METHOD REV. BY _____ DEPT _____ DATE _____

APPROVED BY

_____

DEPT _____ DATE _____

APPENDIX C

C4. Foundations and Geotechnical Hazards (Systematic Rehabilitation)

C4.1 Scope

The fundamental reason for including consideration of foundations and geotechnical hazards in seismic rehabilitation of existing buildings is to improve the overall performance of the buildings. The geotechnical engineer and engineering geologist should work directly with the structural engineer and the building owner or the owner's representative, when necessary, to achieve the optimum rehabilitation strategy for the desired Rehabilitation Objective.

Typically, foundations have performed reasonably well on sites where ground displacement has not occurred because of surface faulting, landsliding, or liquefaction. Furthermore, modifying foundations to improve their performance during anticipated earthquake loading can be very costly because of the limited working space, as well as the presence of the building. Therefore, it is desirable to undertake costly foundation modifications only when they are essential to meeting seismic Rehabilitation Objectives for the building.

In addition to addressing building foundation capacities and deformations during earthquakes, the guidelines address other potential geologic hazards associated with earthquakes that may affect the performance of buildings on some sites.

C4.2 Site Characterization

In gathering data for site characterization, the following should be included:

- Visual inspection of the structure and its foundation
- Review of geotechnical reports, drawings, test results, and other available documents directly related to the building
- Review of regional or local reports related to geologic and seismic hazards, and subsurface conditions
- Site exploration, including borings and test pits
- Field and laboratory tests

The scope of the documentation program for a building depends upon specific deficiencies and the Rehabilitation Objective. In some cases, the cost of extensive analysis and testing can be justified by producing results that will allow the use of more accurately determined material properties than the conservative default values prescribed by the *Guidelines*.

Geotechnical information will be required to establish the subsurface conditions that exist beneath the building, to describe the building foundations, and to assess potential earthquake-related hazards that may affect the performance of the site. The general procedure for evaluating foundations and geotechnical information is outlined on Figure C4-1. In many instances, existing data may be sufficient to characterize the site. However, a detailed site assessment may be required for:

- Structures that require an enhanced level of seismic performance
- Facilities that are supported upon deep foundations
- Facilities that are located within areas that may be subjected to fault rupture, liquefaction, lateral spreading, differential compaction, and landsliding

Such detailed site assessments may be conducted with existing information or with new subsurface data. The following text discusses data sources that should be reviewed in the site characterization, along with the requirements for defining the subsurface conditions and describing the existing foundations.

Data Sources. Information required to adequately characterize a site will likely be derived from a combination of several sources, including existing data, a site reconnaissance, and site-specific studies. Potential data sources include the following:

- geological maps
- topographical maps
- hazard maps
- geotechnical reports
- design/construction drawings

to develop between a footing and the soil. This is considered to be analogous to tension yielding in bending of a structural element where the estimate of inelastic displacements assumes that the beam remains elastic. Even if the seismic overturning moment is equal to the maximum resisting moment due to gravity, this situation changes quickly with seismic load reversal. Experience with past earthquakes does not indicate that gross overturning is a problem for buildings. If the calculated displacements do not result in adverse behavior in the structure, there is no need to limit foundation displacements.

However, the situation for the Immediate Occupancy Performance Level is different, since foundation displacements may result in damage that impedes the use of the facility. For this reason, fixed-base conditions should not be assumed for structures sensitive to base movement.

C4.4.3.3 Nonlinear Procedures

The assumption that the base of the structure is rigid in nonlinear procedures is acceptable, provided that the resulting forces do not exceed upper-bound component capacities. The rationale for this limitation is similar to that for linear procedures.

If the foundation is modeled with appropriate nonlinear force-displacement relationships, the acceptability of geotechnical components for Collapse Prevention or Life Safety Performance is analogous to that for linear procedures. For Immediate Occupancy, the amount of the total structural displacement due to foundation movement must be calculated. Some percentage of this foundation-related movement is assumed to be permanent, and the effects of this must be included in considering whether the building can remain functional. Permanent foundation movement is controlled by foundation soil type and thickness, and foundation system characteristics (footing dimensions and geometry).

C4.5 Retaining Walls

The equation in the *Guidelines* for the seismic increment of earth pressure acting on a building retaining wall is a rounded-off form of the equation developed by Seed and Whitman (1970). (In their equation, the fraction 3/8 rather than the rounded-off decimal 0.4 is used. In view of the uncertainty in these pressures, the rounding off is justified.) This equation was developed as an approximation of a seismic earth pressure formulation presented by Seed and Whitman ("Mononobe-Okabe method," 1970) for yielding (free-standing) retaining walls. Because building walls retaining soil (e.g., basement walls) are relatively nonyielding due to the restraint provided by the interior floors, the applicability of these equations to building walls is a matter of some debate. Alternative elastic solutions for seismic wall pressures have been proposed. The most widely used elastic solution is that of Wood (1973), which provides seismic pressures of the order of twice those given by the Seed and Whitman expression. The argument for the lower values of the Seed and Whitman expression is that a limited number of dynamic finite element analyses and one case history (Chang et al., 1990) have found that the calculated and observed seismic earth pressures were of the same order of magnitude as those given by the Mononobe-Okabe formulations and lower than those of the Wood elastic solutions. In a state-of-the-art paper, Whitman (1991) concluded that the Mononobe-Okabe equation should suffice for nonyielding walls, except for the case where a structure, founded on rock, has walls retaining soil. Other publications that discuss seismic lateral earth pressures include Martin (1993), Soydemir (1991), and the *ASCE Standard 4* (ASCE, 1986; under revision).

If building retaining walls are required to be utilized as part of the foundation system to resist seismically-induced structure inertia forces, then higher pressures may be required to be developed on the walls. The maximum pressures that can be mobilized by the soil are passive earth pressures. Because of uncertainty regarding the direction or significance of soil inertia forces affecting the passive pressure capacity, it is suggested that passive pressures be obtained using conventional static earth pressure formulations.

C4.6 Soil Foundation Rehabilitation

Foundation enhancements may be required because of inadequate capacity of existing foundations to resist overturning effects (inadequate footing bearing capacities) or inadequate shear resistance of the foundations. Additionally, foundation enhancements may be required to support structural improvements, such as new shear walls or strengthening of existing shear walls. In either event, the foundation enhancements may be accomplished by a combination of one or several of the following schemes:

- Soil improvement

WESTON SOLUTIONS

SHEET ____ of ____

CLIENT/SUBJECT _____ W.O. NO. _____

TASK DESCRIPTION _____ TASK NO. _____

PREPARED BY _____ DEPT _____ DATE _____

MATH CHECK BY _____ DEPT _____ DATE _____

METHOD REV. BY _____ DEPT _____ DATE _____

APPROVED BY

DEPT _____ DATE _____

APPENDIX D

WESTON SOLUTIONS

SHEET D-1 of ___

CLIENT/SUBJECT ___ W.O. NO. ___

TASK DESCRIPTION ___ TASK NO. ___

PREPARED BY ___ DEPT ___ DATE ___

MATH CHECK BY ___ DEPT ___ DATE ___

METHOD REV. BY ___ DEPT ___ DATE ___

APPROVED BY ___ DEPT ___ DATE ___

MSE Wall

- seismic design parameters
- From pg 3, MSE wall foundation conditions is "Site Class D" (stiff soil profile) based on IBC 2003, Table 1615.1.1.

- $S_S = .3385g$
  $S_1 = .0976g$ > see pg 4
- From Section 1615.1.2 (IBC 2003):

by interpolation < $F_a = 1.529 \rightarrow$ Table 1615.1.2(1)
$F_v = 2.40 \rightarrow$ Table 1615.1.2(2)

- $\therefore S_{MS} = F_A S_S = 1.529(.3385g) = .518g$
  $S_{M1} = F_v S_S = 2.40(.0976g) = .234g$
- $S_{DS} = \frac{2}{3} S_{MS} = \frac{2}{3}(.518g) = .345g$
  $S_{D1} = \frac{2}{3} S_{M1} = \frac{2}{3}(.234g) = .156g$

& $\frac{K_H}{g} = \frac{S_{DS}}{2.5} = \frac{.345g}{2.5} = \frac{.138g}{g} = .13$

APPENDIX "C"

Geotechnical Calculations of Surcharge effects from MSE Walls on Wall No. 1

(By WESTON Solutions)

CLIENT/SUBJECT TA-73 LOS ALAMOS AIRPORT LANDFILL CLOSURE W.O. NO 13104.002.001

TASK DESCRIPTION Setback Requirements for Wall No.2 TASK NO. 7000

PREPARED BY K. Moser / A. Harpur DEPT 1495 DATE 6/17/05

MATH CHECK BY K. Moser DEPT 1495 DATE 6/17/05

METHOD REV. BY A. Harpur DEPT 1495 DATE 6/17/05

BACKGROUND

The reinforced concrete wall (Wall No. 1) was not designed to support any permanent surcharge loads. If Wall No. 2 is constructed too close to Wall No. 1 it will act as a surcharge on Wall No. 1. Therefore it is critical to ensure that Wall No. 2 is setback sufficiently far such that it does not act as a surcharge on Wall No.1.

ANALYSIS

An initial assess of the required setback distance was completed using the Culmann graphical procedure. This analysis was completed for a 26.5 feet high wall (25-foot stem with a 1.5-foot footing) conservatively assuming the use of backfill material with an internal friction angle (ϕ) of 32°. This analysis indicated that for a 26.5 ft high wall a setback distance, measured from the back of the footing was 18.67 feet, say 18.7 feet. A setback distance of 7.85 feet was determined using the Culmann procedure for a 11.5-ft high wall. To confirm these setback requirement distances were determined using Rankine theory.

Using Rankine theory, the failure plane forms an angle of 45 + $\phi/2$ degrees with the horizontal. Assuming $\phi = 32°$, the failure plane forms an angle of 61° with the horizontal. Based on this angle and a wall height of 26.5 feet the failure plane would intersect the ground surface at a distance of 14.7 feet. This value is about 20% less than the value determined using the Culmann procedure. The Rankine procedure resulted in a setback distance of 6.37 feet, about 20% less than the 7.85 feet determined using the Culmann procedure.

The following table summarizes the required setback distances for various wall heights. The setback distances were calculated using Rankine theory and increased by 20% consistent with the results obtained for the 26.5-foot high wall. A more realistic value of 34° for the internal friction angle of the structural backfill was used in the calculations.

These setback requirements are shown on the design drawings.

WALL SETBACK REQUIREMENTS

Wall Section	Starting Station	Wall Height (ft)	Footing Thickness (ft)	Total Length/Height (ft)	Internal Friction Angle of Backfill Soil	Rankine Setback from rear edge of heel(ft)	F.S. (20%)	Required Setback from end of heel (ft)	Wall 1 footing (heel) length (ft)	Wall 1 stem width (ft)	Required Setback from front face to front face (ft)	Required Setback from rear face to front face (ft)
A1	3+56	3	1.25	4.25	34	2.26	0.45	2.71	1.92	0.83	5.46	4.63
	3+50	5	1.25	6.25	34	3.32	0.66	3.99	1.92	0.83	6.74	5.90
B1	3+42	6	1.5	7.5	34	3.99	0.80	4.79	3.25	1.00	9.04	8.04
	3+34	8	1.5	9.5	34	5.05	1.01	6.06	3.25	1.00	10.31	9.31
	3+30	10	1.5	11.5	34	6.11	1.22	7.34	3.25	1.00	11.59	10.59
C1	3+24	10	1.75	11.75	34	6.25	1.25	7.50	5.00	1.25	13.75	12.50
	3+20	12	1.75	13.75	34	7.31	1.46	8.77	5.00	1.25	15.02	13.77
D1	3+08	14	2.25	16.25	34	8.64	1.73	10.37	6.00	2.00	18.37	16.37
	3+04	16	2.25	18.25	34	9.70	1.94	11.64	6.00	2.00	19.64	17.64
	3+00	18	2.25	20.25	34	10.77	2.15	12.92	6.00	2.00	20.92	18.92
E	2+96	20	2.25	22.25	34	11.83	2.37	14.20	7.00	2.50	23.70	21.20
	2+80	22	2.25	24.25	34	12.89	2.58	15.47	7.00	2.50	24.97	22.47
	2+50	24	2.25	26.25	34	13.96	2.79	16.75	7.00	2.50	26.25	23.75
	2+05	22	2.25	24.25	34	12.89	2.58	15.47	7.00	2.50	24.97	22.47
D2	2+00	20	2.25	22.25	34	11.83	2.37	14.20	6.00	2.00	22.20	20.20
	1+83	19	2.25	21.25	34	11.30	2.26	13.56	6.00	2.00	21.56	19.56
	1+64	17	2.25	19.25	34	10.24	2.05	12.28	6.00	2.00	20.28	18.28
	1+60	15	2.25	17.25	34	9.17	1.83	11.01	6.00	2.00	19.01	17.01
C2	1+53	15	1.75	16.75	34	8.91	1.78	10.69	5.00	1.25	16.94	15.69
	1+45	14	1.75	15.75	34	8.37	1.67	10.05	5.00	1.25	16.30	15.05
	1+30	12	1.75	13.75	34	7.31	1.46	8.77	5.00	1.25	15.02	13.77
B2	1+26	10	1.5	11.5	34	6.11	1.22	7.34	3.25	1.00	11.59	10.59
	1+22	8	1.5	9.5	34	5.05	1.01	6.06	3.25	1.00	10.31	9.31
	1+15	6	1.5	7.5	34	3.99	0.80	4.79	3.25	1.00	9.04	8.04
A2	1+07	5	1.25	6.25	34	3.32	0.66	3.99	1.92	0.83	6.74	5.90
	1+00	3	1.25	4.25	34	2.26	0.45	2.71	1.92	0.83	5.46	4.63

Notes:

1) FS of 20 % determined from comparison between Culmann and Rankine theory.

Active Failure Wedge Analysis
using Culmann procedure
more conservative than Rankine

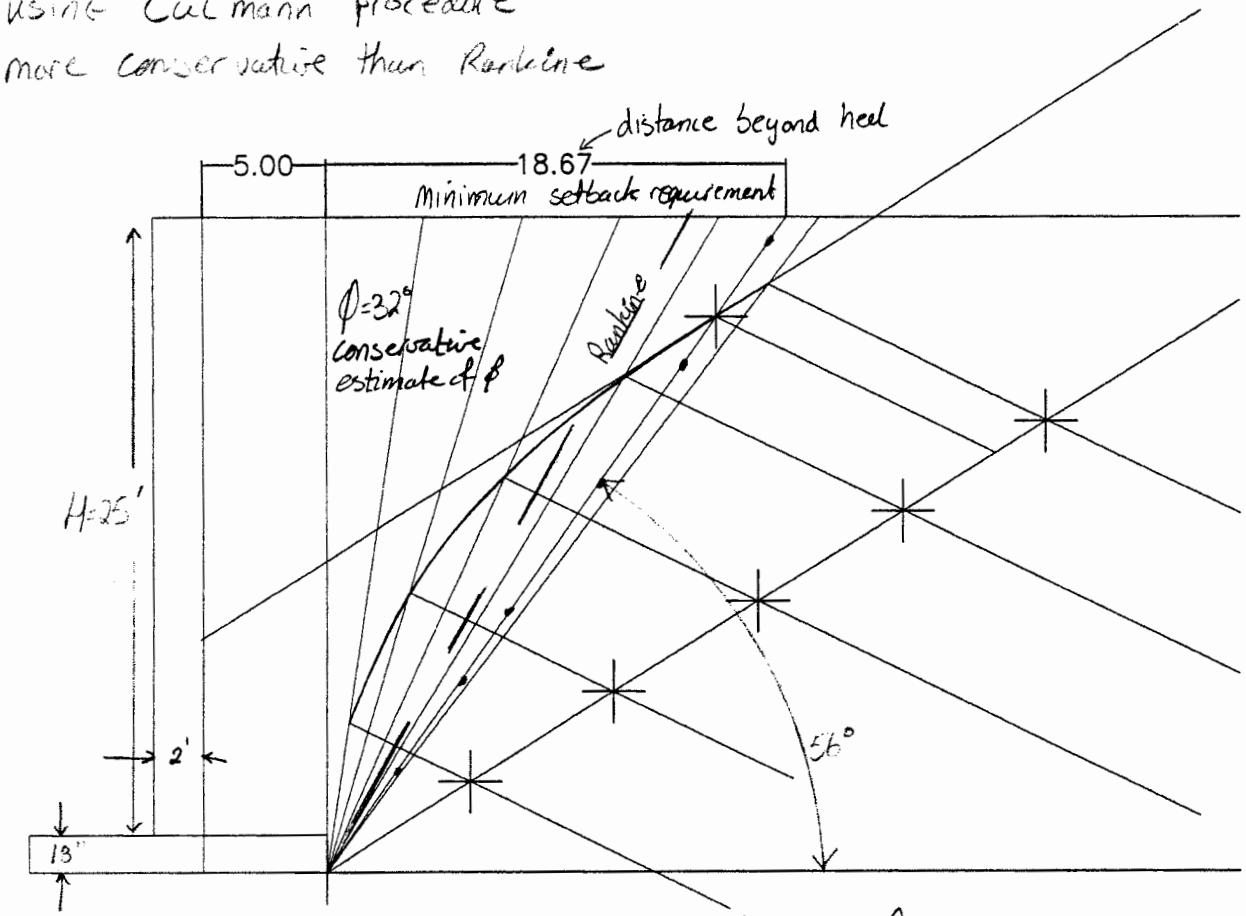

Minimum Surcharge set back distance for 26.5 ft high wall, as measured from base of footing, is approx. 24 feet. This set back distance is measured from the rear face of the wall.

$$\frac{18.7-14.7}{18.7} = 21.4\%$$

say 20%

Culmann is about 20% higher/longer than Rankine ∴ more conservative

Use Rankine but increase by 20%

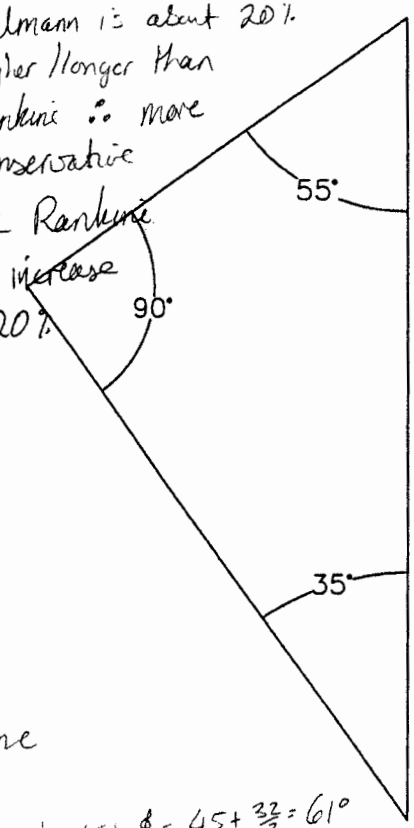

Rankine

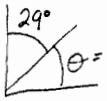

$\theta = \tan 45 + \frac{\phi}{2} = 45 + \frac{32}{2} = 61°$

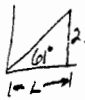

$25+1.5 = 26.5\text{ ft} = H$

$L =$

$\tan 61° = \frac{H}{L} = \frac{26.5}{L}$

$L = \frac{26.5}{\tan 61°} = 14.7\text{ ft}$

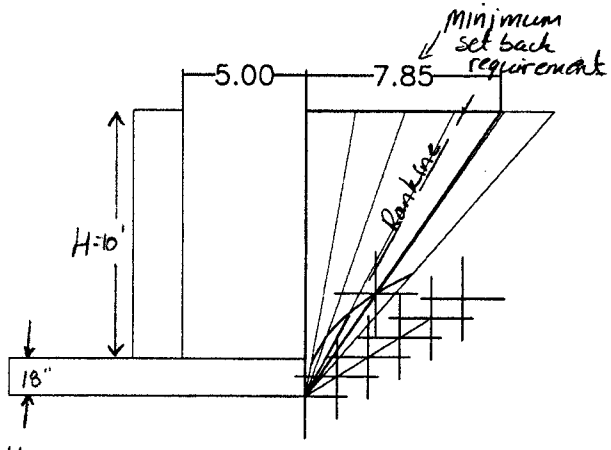

$H_{wall} = 10 + 1.5 = 11.5$

Set Back = 5 + 7.85 = 12.85 from rear face of wall

$$\frac{7.85 - 6.4}{7.85} = 18.5\%$$

Culmann is more conservative than Rankine.

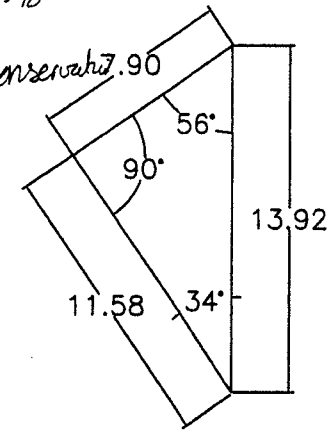

Rankine

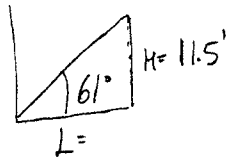

$\tan 45 + \frac{32}{2} = 61°$

$\tan 61 = \frac{11.5}{L}$

$L = \frac{11.5}{\tan 61°} = 6.4\,ft$

APPENDIX "D"

Chapter 7 "Earthquake (Seismic) Design

From ***Basics of Retaining Wall Design - A Guide for the Practicing Engineer,***
6th Edition, April 2005, by Hugh Brooks, HBA Publications, Inc.
www.retainpro.com

7. EARTHQUAKE (SEISMIC) DESIGN

Earthquake (Seismic) Loading

Texts that address seismic design of retaining walls (e.g. Bowles, Kramer) acknowledge that seismic design of retaining walls is a highly complex issue, compounded by the assumptions that must be made to establish reasonable design guidelines. This is still an emerging science and geotechnical reports usually give only the peak ground acceleration applicable to the location and leave the application of this information to the designer.

Even the necessity of seismic design of retaining walls is arguable, considering compensating safety factors (e.g. 1.5 overturning safety factor). Earthquake caused retaining wall failures from which to obtain mode-of-failure lessons are very rare (waterfront structures excepted). It is also argued that since retaining walls are often at a distance from structures that would be affected by their failure and thus are not a life-safety issue. However, these arguments are moot considering the mandatory language of IBC and ASCE 7.

IBC 2003, Section 1622.1.2, refers to and modifies ASCE 7 to read as follows:

> ' . . . This section applies to all earth retaining walls. The applied seismic forces shall be determined in accordance with Section 9.7.5.1 *[This section states that "... the owner shall submit to the authority having jurisdiction a written report that includes an evaluation of the items in Section 9.7.4.1 and the lateral pressures on basement and retaining walls due to earthquake motions". Section 9.7.4.1identifies items to be included in the geotechnical report to be submitted ", when required by the authority having jurisdiction"]*

This clearly requires a seismic analysis of "earth retaining structures", based upon a geotechnical report, but implies some discretionary latitude by the "authority having jurisdiction".

The Uniform Building Code (UBC '97) and the California Building Code (CBC '01) do not appear to specifically require seismic design of "earth retaining structures" unless the requirements for "non-buildng structures" in CBC '01 could be so interpreted.

Check applicable local and state codes that may have specific seismic design requirements for retaining walls.

The Mononobe-Okabe equations

Of the many investigations of dynamic forces on retaining walls, one of the most important and influential is an ASCE paper titled *Design of Earth Retaining Structures for Dynamic Loads,* by Seed and Whitman, delivered at a 1970 Cornell University conference. In this paper they cited the pioneering studies by Mononobe (1929) and Okabe (1926), widely referenced today. Another contribution was a subsequent ASCE paper by Robert Whitman titled, *Seismic Design and Behavior of Gravity Retaining Walls,* 1990. They considered this lateral force to be an inverted triangular wedge of soil behind the wall. Seed-Whitman proposed a simplified formula, based upon the Mononobe-Okabe theory, for the combined static and seismic factor, which they termed K_{AE}, to be applied to this wedge acting against the wall. This was an adaptation of the Coulomb formula to calculate the <u>total</u> (seismic and static) pressure and introduced the variable θ, which is defined as the angle whose tangent is the ground acceleration ($\theta = \tan^{-1} k_h$).

This equation is presented in **Figure 7-1.**

K_{AE}= active earth pressure coefficient

$$= \frac{\sin^2(\alpha + \theta - \phi')}{\cos\theta' \sin^2\alpha \sin(\alpha + \theta' + \delta)\left[1 + \sqrt{\frac{\sin(\phi + \delta)\sin(\phi - \theta' - \beta)}{\sin(\alpha + \delta + \theta')\sin(\alpha - \beta)}}\right]^2}$$

Where $\theta = \tan^{-1} K_h$, α = wall slope to horiz. (90° for a vertical face), ϕ = angle of internal friction, β = backfill slope, and δ = wall friction angle.
The horizontal component is $K_{AE} \cos\delta$.

For a vertical wall face and δ assumed to be $\phi/2$,this becomes:

$$K_{AE} = \frac{\sin^2(90+\theta-\phi)}{\cos\theta \sin^2(90+\theta+\phi/2\left[1+\sqrt{\frac{\sin 1.5\phi \sin(\phi-\theta-\beta)}{\sin(90+\phi/2+\theta)\sin(90+\beta)}}\right]^2}$$

The total force (active and earthquake), $P_{AE} = \frac{1}{2}(\gamma) K_{AE} H^2$ where γ = soil density and H = retained height.

Figure 7-1. ***Mononobe-Okabe Equation***

When the acceleration is zero, $k_h = 0$, and K_{AE} becomes the familiar Coulomb K_A formula.

Also, note that passive the pressure coefficient decreases under seismic conditions.

The passive earth pressure coefficient, K_{PE} is:

$$K_{PE} = \frac{\sin^2(\alpha-\theta+\phi')}{\cos\theta' \sin^2\alpha \sin(\alpha+\theta'+\delta)\left[1+\sqrt{\frac{\sin(\phi+\delta)\sin(\phi-\theta'+\beta)}{\sin(\alpha+\delta+\theta')\sin(\alpha-\beta)}}\right]^2}$$

K_{AE} is thus two components (seismic and static). The seismic component (K_{AE} - K_A) is assumed to be an inverted, near-triangular trapezoid force (maximum at the ground surface) acting at a height of 0.6 H. For stem design, H is the height from top of footing to retained height. For overturning and sliding, H is the height at the back face of the footing, along a virtual vertical plane from the bottom of the footing to its intersection with the backfill grade.

The K_A component is the familiar triangular distribution acting at H / 3.

The height to the combined resultant can be obtained by the formula:

$$\bar{x} = \frac{P_A (H/3) + (P_{AE} - P_A)\, 0.6H}{P_{AE}}$$

The direction of force application, per the Coulomb formula, is assumed to be inclined at an angle (from horizontal) equal to the friction angle at the back face of the stem, δ, which is often assumed to be $\phi/2$. Therefore, the horizontal components can be assumed to be

$$P_{AE\,horiz.} = \cos\left(\phi/2\right) P_{AE}.$$

A simple approach to the design for seismic is suggested by the overlapping force triangles, which tend to combine into a nearly uniform load over the height of the wall, if the height of the resultant is 0.5H.

Therefore, $w = \dfrac{K_{AE}\, \gamma\, H^2}{2H} = 0.5\, K_{AE}\, \gamma\, H$, where w is the equivalent uniform lateral static plus seismic force. This simplification, while approximate, is particularly helpful for checking stem moments and shears at various heights.

Seed and Whitman suggest an approximation of $K_{AE} = K_A + 0.75\, k_h$. If, for example, k_h is 0.30 and $K_A = 0.27$, then K_{AE} approximate would be 0.495. This would suggest an 83% increase over static K_A. However, the stem moments and overturning are greatly increased since $0.75\, k_h$ act at an assumed height of 0.60H. Some geotechnical engineers use this method to give an added uniform seismic force over the full retained height with resultant acting at 0.6H. Such a requirement, therefore, might read "for seismic design add a uniform lateral force $= 20\, H^2$ with the resultant applied at 0.6H.

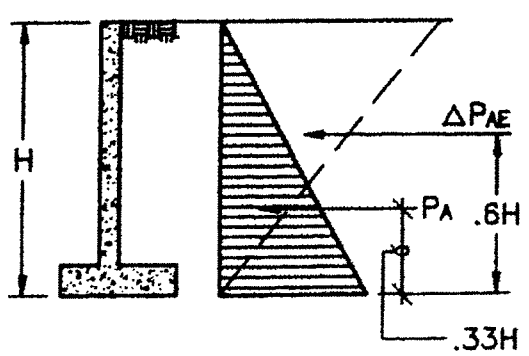

Figure 7-2. ***Application of Seed Whitman Method***

Seed and Whitman's paper commented that few building codes (at that time) required seismic provisions for retaining walls, and concluded that the factors of safety for static design, which are generally around 1.5, are adequate to protect the wall for short term seismic forces, since such forces would merely reduce the safety factor to an acceptable value greater than 1.0.

NAVFAC for Seismic Zone 4 (UBC '97) requires, in addition to static force, 20% of the total active pressure and 20% of the wall weight, acting at 2/3 the height. It further comments that the one-third stress increase for short-term loading should more than compensate for the added seismic stresses.

AASHTO contains seismic design guidance for retaining walls in their Section 6 of Division I-A.

Determining k_h

k_h is the ground acceleration factor used in the Mononobe-Okabe (M-O) equation to compute lateral seismic earth pressure in cantilevered retaining walls.

This is a design value and not necessarily the most severe acceleration that could occur at the site. Unless an arbitrarily reduced value of k_h is used, one-third to one-half the peak ground acceleration is often used (see Kramer and others).

The starting point is to determine the peak acceleration applicable to your design. Assuming your code is IBC 2003, or ASCE 7-02, which has identical charts (UBC '97 will be discussed later), select from the contours the Maximum Considered Earthquake (MCE) ground motion for 0.2 second, spectral response acceleration at 5% of critical damping. Note that retaining walls are "short period", hence the 0.2 second selection.

There is an easier way. Go to http://eqhazmaps.usgs.gov This is a U.S. Geological Survey address. Just enter your zip code (but latitude and longitude is more accurate). For example, Newport Beach, California, zip code 92660, gives 127.4 percent "g", or 1.274. These maps are somewhat different from IBC maps and the latter are preferred and a zoom-capable CD is available from IBC.

Here is an example procedure for obtaining a design K_h using the USGS Hazard Maps:

From charts, $S_s = 1.274$
(All terms defined in referenced codes)

$S_{MS} = F_a S_s$

$F_a = 1.0$ (This is a function of soil characteristics and value of S_s. See Table 1615.1.2 in IBC).

$\therefore \quad S_{MS} = 1.0 \, x \, 1.274 = 1.274$

$S_{DS} = \beta \, S_{MS} = 0.667 \, x \, 1.274 = 0.85$

Per ASCE 7.02 Provisions Sec. 7.5.3:

$$K_h = \frac{S_{SD}}{2.5} = 0.40 \, x \, 0.85 = 0.34$$

(Note that this is about one-fourth MCE) Note also that the above example value of k_h is nearly the same as could be obtained using simplified base shear equation 16-56 with R = 3.0.

Alternately, using UBC '97 and/or CBC '01:

Derive K_h from base shear, V, for non-building structure. (Terms defined in UBC '97 and CBC '01).

$$V = \frac{2.5 C_a I}{R} W \quad \text{Assume } R = 3.0$$

For example design: $C_a = 0.40$, $I = 1.0$

$$\therefore \quad V = \frac{2.5 \, x \, 0.40 \, x \, 1.0}{3.0} W = 0.33 \, W$$

This suggests $K_h = 0.33 \cong 0.34$ per IBC.

Simplified Seismic Force Application

The NEHRP 2000 Part 2 –Commentary states Seed and Whitman's proposed simpler approximation:

$\Delta K_{AE} \sim (3/4) \, k_h \qquad \therefore \, \Delta P_{AE} \sim (1/2)\gamma H^2 (3/4) k_h \sim (3/8) k_h \gamma H^2$

k_h is the peak ground acceleration modified per Provisions Sec. 7.5.3:

where $k_h = S_{DS} / 2.5$

Base moments, using this simplification, are therefore:

$$M_{AEbase} = P_A (H/3) + (\Delta P_{AE}) (0.6 H)$$
$$= \gamma H^3 (0.17 K_a + 0.225 k_h)$$

An observation from this is that the base moments from static and dynamic (seismic) are equal when $k_h \sim 0.75 K_A$

An arguable issue: If the seismic component is considered a factored force, and since overturning and soil pressure are based upon un-factored forces (E/1.4), should the seismic component be reduced by 0.71?

Vertical Distribution of Seismic Force on Stem

Here is a simplified method for assuming a uniformly applied force to the stem:

Since $P_{AE} = P_\Delta + \Delta P_{AE}$

$$P_{AE} \cong \frac{\gamma H^2}{2} (.75 k_h) \cong .375 k_h \gamma H^2$$

$$P_A = \frac{K_a \gamma H^2}{2}$$

Total force on stem: $P_A + \Delta P_{AE} = .5K_a \gamma H^2 + .375 k_h \gamma H^2$

If resultant acts at 0.5 H, the uniform lateral on stem

$$= \frac{.5K_a \gamma H^2 + .375 K_h \gamma H^2}{H} = (.5 K_a + .375 k_h) (\gamma H)$$

For design example, assuming $K_a = 0.35$, $k_h = .34$, $\gamma = 120$

$F_P = 36H$

Note that this simplified formula is <u>not valid</u> if there is a <u>sloped backfill</u> that will significantly increase seismic forces.

Seismic for Stem Self-weight

This is an arguable issue: whether to include the seismic force due to self-weight of the wall acting simultaneously with the seismic due to earth pressure. It does not appear to be defined in the codes. AASHTO, however, in 5.5.4 states: "*...seismic design forces should account for wall inertia forces in addition to the equivalent static force, where a wall supports a bridge structure...*". But section 5.6.4, referring to flexible cantilever walls, states that "*Forces resulting from wall inertia effects may be ignored in estimating the seismic lateral earth pressure*".

Judgment indicates that seismic self-weight should be applied simultaneously with seismic due to earth pressure.

Using ASCE 7-02, Section 9.6.1.3:

F_P in equation 9.6.1.3-1, for cantilevered wall and assuming Ip = 1.0,

Reduces to: $Fp = 0.4\ S_{DS}\ W_p$

Per above design example where $S_{DS} = 0.85$,:

$$F_P = 0.4 \times 0.85 \times 1.0\ W_P = 0.34\ W_p$$

Using the UBC '97 method:

$$F_P = \frac{a_P C_a I_P}{R_p}\left(1 + \frac{h_x}{h_r}\right) W_P$$

$$a_p = 1.0,\ R_P = 3.0,\ \frac{h_x}{h_r} = 0 \text{ at bottom and } 1.0 \text{ at top.}$$

F_p minimum is $0.7\ C_a\ I_p\ W_p$

F_p for design is average between top and bottom

$$\therefore F_P = (1.33 + 0.70) / 2 = 1.015 * [\ C_a I_P W_P\ ]$$

For example design, $C_a = 0.44$, $I_P = 1.0$

$$\therefore F_P = 0.45\ W_P$$

USER'S MANUAL

Retain Pro 2005

for Windows™ 95/98/NT/2000/ME/XP

Design & Analysis of Cantilevered and Restrained Retaining Walls

Retain Pro Software
Div. HBA Publications, Inc.
P.O. Box 826
Corona del Mar, CA 92625
(949) 721-4099

Retain Pro™ ©2005 RetainPro Software
Division of HBA Publications, Inc.
Retain Pro User's Manual ©2005 HBA Publications, Inc.
All rights reserved

NOTE: Any errata for this manual will be posted on www.retainpro.com/support

Table Of Contents

Caution!! iii
Copyrights iii
Trademarks iii
Welcome 1
Just a Minute! Please Read This First 1
Caution Reminder 2
About Retain Pro 3
What You Can Do With Retain Pro 2005 3
What's New in Version 2005? 5
Before You Begin? 6
System Requirements 6
Installation Procedure 7
Technical Support 7
Program Limitations 8
Disclaimer 9
License Agreement 10
Quick-Start Overview Tutorial 14
The Start Menu Screen 16
The Tool Bar 18
Open Project File / Make New Project file 20
Walls in Project File Window 21
The Bottom Buttons 22
Pick List 24
The Settings Tab 25
Choose Add Method Window 26
Using Wall Wizard 28
Wall Specific Information 30
Design Sequence Tabs 31
Visual Input Screen 33
Reference Diagram for Dimensional Conventions Used 34
Criteria Tab 35
- General Data 35
- Material Data 39
- Options 41
- Load Factors 43

Loads Tab 44
- Vertical Loads 44
- Lateral Loads 48

Seismic Loads 50
Stem Design Tab 53
Cantilevered 53
Tapered Stem 60
Gravity Wall 63
Restrained Wall 66
Footing Tab 70
Footing Dimensions 70
Key Dimensions and Sliding 74
Restrained Wall Stability 77
Results Tab 79
Summary 79
Resisting Moments Summary 82
Overturning Moments Summary 83
Wall Tilt 84
Construction Tab 85
Wall Loading Tab 86
Stem Diagrams 87
Auto. Maintenance Updates 88
Creating AutoCAD® DXF File 89
General 90
Colors and Layers 91
The Help System 92
How the Program Computes: Methodology & Design / Analysis 93
Sample Calculations and Printouts 99
Appendix A - Table of Horizontal Temperature and Shrinkage Reinforcing 161
Appendix B - Development and Lap Lengths in Masonry & Concrete Walls 162
Appendix C - Weights of Masonry Walls 163
Appendix D - Summary of Concrete & Masonry Design Formulas 164
Appendix E - References Used for the Development of this Program 165
Appendix F - Rankine and Coulomb Formulas 166
Appendix G - Conversion Factors - English - S.I. - Metric 167
INDEX 168

CAUTION!!

Retain Pro is intended to be a design aid for persons already having the technical ability to design retaining walls in accordance with accepted structural engineering principles and applicable building codes. Design criteria used, input values, and all results from this program should be verified. The final design and/or analysis shall be the responsibility of the person(s) using the program and its results. Program developers ENERCALC Engineering Software, and Retain Pro Software/HBA Publications, Inc., their owners, and employees, are not responsible for anything resulting from the use of this program or its calculated values or drawings. Your acceptance of these conditions is a condition for its use. If you do not agree to accept these conditions and responsibility, you should return the program disk and accompanying documentation, retaining no copies and with a statement that it has not been installed on your computer, within 30 days of receipt and receive a refund of purchase price excluding shipping charges.

Copyrights

Retain Pro™ ©2005 Retain Pro Software
All rights reserved

Retain Pro 6.1 User's Manual ©2005
HBA Publications, Inc.
All rights reserved

Basics of Retaining Wall Design
© 2005 Hugh Brooks

All rights reserved

Trademarks

Wherever the term "Windows" is used, it is a registered trademark of Microsoft Corporation.

Wherever "AutoCAD" is used, it is a registered trademark of Autodesk, Inc.

Welcome!

Now you have a powerful, timesaving tool to help you design or analyze nearly any retaining wall you're likely to encounter. It will transform one of the most tedious structural design tasks from hours to minutes - and give you full documentation both on-screen and on printouts.

We welcome you to our family of many thousands of Retain Pro users nationwide, and on our part, we are dedicated to provide you with the finest retaining wall design software available.

We want to stay in touch with you, to know how you like the program, and to hear any suggestions you have for further improvements or new features. Remember to check our website, www.Retain Pro.com, often for news and announcements, and you can email us with any comments or suggestions at hbrooks@retainpro.com.

Just a Minute! Please Read This First...

We know you want to jump right in, but even if you are upgrading from a previous version, please read through this User's Manual first. True, you may not need to, especially since the program is quite intuitive and helpful prompts are everywhere, but a read-through will be an excellent investment of 30 minutes of your time.

We assure you that you will save time by doing this - and perhaps an unnecessary phone call to us. Nearly all of the entries are explained, and in particular, you should read the section *Design/Analysis and Methodology*.

And again, a reminder to check our Website often at www.retainpro.com. You can e-mail us from the site, and you will also be alerted to any technical bulletins (yes, we do occasionally find bugs). With version 2005 you will have automatic maintenance updates, via the Internet, and you will be asked whenever they are available. This manual is also available in pdf format under the Help Menu.

You can access our online User's Forum using your email address and password, to post questions and comments, and top read announcements from us.

If you change your email address you MUST notify us at www.retainpro.com/support, or you will not receive our bulletins and announcements.

Caution:

AGAIN WE NEED TO REMIND YOU THAT THIS PROGRAM IS INTENDED FOR THE PRACTICING ENGINEER WHO HAS THE TRAINING AND CAPABILITY TO DESIGN RELATIVELY COMPLEX RETAINING WALLS "BY HAND," AND IS FAMILIAR WITH SUCH DESIGN PRINCIPLES. THIS PROGRAM SHOULD BE USED ONLY BY THOSE WITH THESE PREREQUISITES, SINCE A LACK OF UNDERSTANDING OF TERMINOLOGY AND DESIGN PRINCIPLES COULD LEAD TO ERRONEOUS INPUT AND INACCURATE RESULTS.

About Retain Pro™

This new Version 2005 is our tenth upgrade since Version 1.0 was introduced in the summer of 1989. We've come a long way since then, and Retain Pro is now used in thousands of design offices, governmental agencies, and plan review agencies nationwide, and has become the #1 choice for retaining wall design and analysis software.

The Retain Pro program was written by Michael Brooks, founder and president of Enercalc Engineering Software, and portions of Retain Pro are included in their *Structural Engineering Library*. Since 1991 Retain Pro Software has been an independent company acquired by Hugh Brooks, SE, as a division of HBA Publications, Inc., Corona del Mar, California.

What You Can Do With Retain Pro 2005

This is a powerful program that you can use to design or check nearly any configuration or loading conditions for cantilevered or restrained retaining walls. The design methodology follows accepted engineering practice, as described in later sections, and is in accordance with applicable provisions of ACI 318-02, ACI 530-02, IBC 2003, NEHRP 2000, ASCE 7-02, UBC '97, and CBC '01.

Here is a listing of design capabilities contained in Retain Pro 2005:

- Cantilevered Stem wall can have up to five different stem sections, of either masonry or concrete, each with a different thickness and/or reinforcing size and spacing. You may also include a weightless fence on top of the wall. Concrete stem can be tapered on inside face (cantilevered walls only).
- Selects applicable building code and program automatically inserts load factors, all of which can be changed or set as default
- Restrained walls with lateral support near top and base either fixed or pinned.
- Designs gravity walls.
- Surcharges on either side of the wall.
- Sloped backfill.
- Axial dead and live load applied to the top of the wall, with eccentricity.
- Wind acting on a wall projection above grade.
- Wall Wizard for quick-start data entry.

- Optional Visual Input data entry screen.
- Add lateral loads against the stem -- uniform or concentrated (impact) loads.
- Effect of an adjacent footing behind the wall.
- Water table conditions (two levels of active pressure).
- Option to use user-defined active and passive pressure or input angle of internal friction and program will compute pressures using the Rankine or Coulomb Formulas.
- Add seismic forces per Mononobe-Okabe equations, including wall self-weight and restrained walls.
- Wall tilt calculations.
- Specify percent passive and frictional resistance to be used to prevent sliding.
- Specify sliding resistance using cohesion, in lieu of friction.
- With the built-in AutoCAD® utility you can create a .DXF file of your design to import to your CAD program (AutoCAD®, AutoCAD® LT, QuickCAD, and others) to create a to scale drawing for inclusion in your drawings, or print on your laser printer.
- On-screen graphics to view input loading conditions and wall geometry.
- Database files to keep track of your designs, with capability to add, edit, delete, copy, or print a file. Print directory lists.
- Automatic sizing of footing
- Customize your title block for printouts. Even add your logo.
- Over 70 values (wall weights, factors, stresses, and dimensions) can be modified or set as default values.
- Extensive on-line Help System and access to online User's Forum.
- Warning messages for overstress conditions.
- Select either U.S. or SI units.
- Comprehensive two page 8.5" x 11" calculation printouts.

What's New In Version 2005 ?

You'll experience a new look and feel, with an easier-on-the-eyes background color, improved printouts, and lots of tidying-up enhancements to make your work even easier.

There's this new User's Manual with more explanations, and it's also accessible within the program, in pdf format.

We've added a QuickHelp button to give you instant explanations of all entries, including tips, and it's accessible from every screen.

You'll never be out-of-date with any missed patches. Every time you open Retain Pro 2005 you'll be asked if you want to install a maintenance update (provided one becomes necessary). And it's all automatic.

You'll be assured of continuing technical support. Personalized, either fax, email or talking to Hugh.

If you're upgrading from version 6.1x, you will, of course, have all the patches issued up through 6.1f, in case you missed any.

If you're upgrading from version 6.0, you'll also find that we've updated to all current codes, added editable load factors, added seismic design for restrained walls and wall self-weight, and other improvements. We also introduced assigning you a Product Activation Code (PAC) which lets you install Retain Pro on multiple computers without a CD (Internet connection is required).

If you're upgrading from version 5.x or earlier, you'll also find a whole new array of features, including gravity walls, seismic design, and many other technical improvements throughout.

We doubt whether anyone is still using version 3 or earlier, but it should be noted that in version 4 we switched from DOS to Windows.

Before You Begin

First, read the license agreement contained herein, and review our cautionary notes about **only qualified personnel using the software**. When you install and use the software you will be accepting and bound by all the conditions stated therein.

Second, understand the operation of the Microsoft Windows version you are using, (95, 98, NT, 2000, ME, or XP) that must be installed on your computer before using Retain Pro. Be sure your display is set for either 800x600-pixel or 1024 x 768, and set for small fonts.

Third, review the hardware requirements outlined below. The software must be installed from the CD onto your hard drive, or downloaded from www.retainpro.com/downloads, using your Product Activation code to activate from demonstration mode.

Fourth, read through this User's Manual so you will know how to navigate and what all the entries mean. If you have downloaded this software, the User's Manual is on the file and should be viewed, read, and printed (Adobe Acrobat).

Lastly, go ahead and run the "SETUP.EXE" program from the installation CD.

System Requirements

Here's what you will need to use this software:

- Pentium 4 processor.
- RAM: 16 MB recommended.
- Windows 95, 98, NT, 2000, ME, 2000, or XP.
- 16 MB of hard disk space.
- A standard 1024 x 768 monitor, or 800 x 600
- Access to the Internet is required since it will be the source of downloads and give you access to the online User's Forum.

Installation Procedure

For Windows 95, 98, NT, 2000, ME, or XP

- From your desktop, click the **START** button and select **RUN**.
- Type **D:SETUP.EXE** in the box to the right of the word "Open". (Or select the correct drive for inserting the CD). Then click the ***OK*** button.
- The setup program will begin. All you need to do is specify the drive and directory location to install Retain Pro 2005 (for example "RP2005").

If you're downloading, go to www.retainpro.com/downloads, and follow the instructions. Your download will be in the Demo mode, and when prompted you will need to enter your 12-character Program Activation Code (PAC), which will be on your email order acknowledgement, to activate the program.

Here are instructions for installing Retain Pro on a server:
Install Retain Pro into its own subdirectory off of the root. Start Retain Pro up on the server and enter your Product Activation Code (PAC). This will store the PAC on the server. On the client, create a shortcut to the executable program file. Be sure that on your shortcut the startup directory is set to the installation directory on the server.

To create a Retain Pro icon for your desktop, right click on the desktop, choose New, choose Shortcut. On Create Shortcut dialogue box choose Browse, then double-click on the Retain Pro directory you installed. Double-click RP6.1.exe, which will then appear on the Command Line in the Create Shortcut box. Click Next, then Finish. An icon will be on your desktop. To rename it, Right-click and choose Rename.

Write down or remember your personal password for access to the online User's Forum and Message Board. You'll also need the email address you used for ordering – you can change it later by going to www.retainpro.com/support.

Technical Support

If you need technical support, go to www.retainpro.com/support. You will find an email form for technical support, fax number, and voice contact information. Please include your name, company, and phone number, and a brief description of the problem you are experiencing. If you question a computational result you must include your hand-calc showing your alleged discrepancy. Please first review the Frequently Asked Technical Questions on our website Support page.
Providing technical support and/or reviewing your design input SHALL NOT be construed as approval of your final design – **responsibility of the final design rests with the Engineer of Record.**

Program Limitations

These are a few conditions that Version 2005 will not currently handle:

- Computation of horizontal reinforcing for shrinkage and temperature. This is at the designer's option due to a wide divergence of opinion and practice. As a guide, please refer to Appendix A for suggestions.
- Water table calculation is not valid for a fluid other than water, nor is this feature available for restrained walls.
- Restrained walls can be of only one material (concrete or masonry) and only be 100% fixed at base, or assumed pinned at base – no intermediate degrees of fixity.
- .DXF files created for restrained walls show only a to-scale depiction of the wall, without reinforcing. The program will display reinforcing selected from the design, however, the designer and CAD person will need to insert and detail the reinforcing per his/her specific design intent. Similarly, details at the top of the wall will need to be input, since conditions are too numerous (e.g. ledgers, connections for concentrated loads, architectural details). Horizontal reinforcing must also be chosen and input.

Feedback and Suggestions

We always want to know how you like Retain Pro, what problems you encounter, and suggestions for new features and other improvements. We want to serve you as best we can!

Just email us at hbrooks@retainpro.com.

DISCLAIMER

Because this software may be used to design components of structures that protect property and human life, it is CRITICALLY important that you fully understand the intended use and capabilities of this program. Only experienced (and preferably licensed) professional engineers should use this software. The authors of this software have tried, to the best of their ability, to correctly combine the principles of structural mechanics, provisions of building codes, and typical analysis processes. Regardless of how thoroughly any software is tested, errors may occasionally —and likely will—occur, and the engineer-of-record for a project should thoroughly review the results and must take responsibility for the use of the final calculations. No software can possibly account for the multitude of factors influencing sound structural design; therefore this software should be considered only an aid to performing numerical calculations. In no event will HBA Publications, Inc., Retain Pro Software, or ENERCALC Engineering Software, its officers, owners, or employees be liable to anyone for any unfavorable conditions occurring from the use of this software. If you do not agree with the terms of this disclaimer or the terms of the License Agreement, return this User's Manual and uninstalled program disk to Retain Pro Software within 30 days of purchase for a full refund of software cost, excluding shipping.

Installation of the software by you indicates your acceptance of this Disclaimer and License Agreement.

License Agreement

This is a legal agreement between you (either an individual or an entity) and Retain Pro Software, div. of HBA Publications, Inc., wherein by installing this software on a computer or network server, you agree to be bound by the terms of this agreement. If you do not agree to the terms of this agreement, promptly return the uninstalled software and accompanying items to us for a refund.

Definitions:

License -- The conditions of use of this software to which you agree to adhere.

Program Activation Code (PAC) -- This is a 24 digit character assigned to you when you ordered, and is on your email order acknowledgement receipt. These are the specific characters to enter when initializing the program in order to change it from a demonstration mode to full use. It contains encrypted information about your use of the software and authorized number of seats.

Registration Number (RN) -- This replaces the originally used four digit order number. It is now a seven digit number following RP. For example, RP2345678. Keep this number handy since it will help us retrieve information about your order if necessary.

Software -- Retain Pro 2005.

Password -- This is a 4 to 8 digit password you assigned to yourself, or your company, for access to our online Forums and Message Board.

Email Address -- This is the email address you used when ordering and is the **only way** we can contact you. If you want to change it, such as from the purchasing department to your personal email, you may do so online at www.retainpro.com/support.

User ID -- This is the same as your email address, and used for access to online Forum and Message Boards.

Seat(s) -- This defines the number of simultaneous users of the Software under the License Agreement

Grant of License

Retain Pro currently offers two classes of license:

Small Office License – Permits installation of the Software on several office computers, including a home computer and a laptop, however, only one simultaneous user is permitted.

Site License – Is intended for larger offices where the Software is installed on a network server allowing unlimited simultaneous users. However, a Site License is for one physical location only. For example, for a branch office another Small Office or Site license would be required.

Retain Pro is considered in "use" on a computer when it is loaded into temporary memory (i.e. RAM) or installed into permanent memory (e.g. hard disk or other storage device) of that computer, except that a copy installed on a network server for the sole purpose of usage access by other computers is not "in use".

A license must be registered to only one entity – individual or company – and one individual must be identified for the contact with Retain Pro and to assure compliance with the license agreement.

It is the responsibility of the licensee to keep Retain Pro informed of any change of address, email address, or contact individual. Changes can be made at www.retainpro.com/support.

Copyrights

The SOFTWARE (Retain Pro 2005) is owned and copyrighted ©2005, by Retain Pro Software, a division of HBA Publications, Inc., a California corporation.

The User's Manual is copyright ©2005 by Retain Pro Software. Copyright material is protected by United States copyright laws and international treaty provisions. Therefore, you must treat the SOFTWARE and User's Manual like any other copyrighted material (e.g., a book or musical recording) except that you may either (a) make one copy of the SOFTWARE solely for backup or archival purposes, or (b) transfer the SOFTWARE to a single hard disk provided you keep the original solely for backup or archival purposes. You may not copy the printed materials accompanying the SOFTWARE.

Other Restrictions

You may not rent or lease the SOFTWARE, but you may transfer the SOFTWARE and accompanying written materials on a permanent basis provided you retain NO copies and the recipient agrees to the terms of this Agreement. If the SOFTWARE is an upgrade, any transfer must include the most recent upgrade and all prior versions. You may not reverse engineer, decompile, or disassemble the SOFTWARE, except to the extent such foregoing restriction is expressly prohibited by applicable law.

Dual-Media Software

You may receive the SOFTWARE in more than one medium. Regardless of the type or size of medium you receive, you may use only the medium appropriate for your single-user computer. You may not use the other medium on another computer or loan, rent, or transfer the disks to another user except as part of the permanent transfer (as provided above) of all SOFTWARE and printed materials, nor printed copies of any documentation provided in "on-line" or electronic form.

Limited Warranty

Retain Pro Software warrants that the SOFTWARE will perform substantially in accordance with the accompanying written materials for a period of thirty (30) days from the date of receipt. Any implied warranties on the SOFTWARE are limited to thirty (30) days.

No Other Warranties

To the maximum extent permitted by law, Retain Pro disclaims all other warranties, either express or implied, including, but not limited to, implied warranties or merchant ability and fitness for a particular purpose, with regard to the SOFTWARE and the accompanying printer materials. This limited warranty gives you specific legal rights. You may have others that vary from state/jurisdiction to state/jurisdiction.

No Liability for Consequential Damages

To the maximum extent permitted by applicable law, in no event shall Retain Pro be liable for any damages whatsoever (including without limitation, damages for loss of business profits, business interruption, loss of business information, or any other pecuniary loss) arising out of the use of or inability to use this Retain Pro product, even if Retain Pro has been advised of the possibility of such damages. Retain Pro makes no warranties, either express or implied, as to the quality and performance of the SOFTWARE, that the calculations contained in the SOFTWARE will meet your requirements, or that the operation of the SOFTWARE will be uninterrupted or error free. You agree that the SOFTWARE is intended to aid you in performing engineering oriented mathematical calculations, and that the results obtained from the SOFTWARE do not necessarily constitute an acceptable engineering design or analysis. You agree that results of the SOFTWARE shall be reviewed by persons possessing experience and thorough understanding of the engineering principles that apply or might apply to the usage of and results of the SOFTWARE. You agree that any owner, officer, director, employee or representatives of Retain Pro Software or HBA Publications, Inc. shall not be liable for any direct, indirect, incidental or consequential damages resulting from a defect in the SOFTWARE, nor for any error of judgment, mistake of fact, or act or failure to act. You waive all warranties imposed or implied by law in connection with the SOFTWARE other than those specifically provided for herein and agree that no agent or employee of Retain Pro Software or HBA Publications, Inc. has made any warranties or promises, express or implied, other than those expressly contained herein.

QUICK-START Overview Tutorial

The program is designed to be intuitive, that is, lead you through the design of a retaining wall, just as you would do it by "hand calcs." But save you lots of number-crunching time!

As we'll describe below, you design the wall by steps—using the tabs at the top of each screen to lead you – from left to right -- from criteria input through the design process. On the right side of your screen you can access Summary, Construction Drawing, Loading Diagram, or Moment/shear diagrams.

You'll start with the WELCOME TO RETAIN PRO 2005 screen, where you choose what you want to do. You'll have many options, such as using Wall Wizard or the graphical data entry screen. Soon you'll learn it's easiest to start with CRITERIA.

To navigate between or within the screens, use your mouse to position the cursor, or use the TAB key to advance the cursor to succeeding entries (don't use the ENTER key after entering date—use the TAB key!). Spin buttons and drop-down menus are also available.

HELP gives you access to Tutorials, and the "QuickHelp" button on the Task Bar displays the related page from the User's Manual for entry explanations. And when your cursor is on an entry, its description is on the Entry Description Bar at the bottom of your screen.

There is a SETTINGS screen tab where you enter your title block information—and even import your logo, which will then appear on all your printouts.

It's easy to change input and manipulate your design to optimize the result you want, and meets your design criteria. (For example, the program doesn't choose the stem reinforcing for you—there are too many options the program can't predict for you—so you play with the bar sizes and spacings until the Stress Ratio (which appears after every entry) approaches 1.0, indicating an efficient design (but not over 1.0, or the Overstress warning should flash on!)

When you're done click PRINT to get a two-page printout of your design. You can also click the Print Preview icon alongside the Print button to preview the printout.

When you've finished a design you can make a DXF file to import into nearly all CAD programs (such as AutoCAD®, AutoCAD® LT or QuickCAD). You'll still need to do some editing, but most of your drawing will be done for you.

Here is a quick tour of the steps to design -- or analyze -- a retaining wall:

1. From the Opening Screen, "WHAT DO YOU WANT TO DO?," choose your path. If you are just starting the program, you will want to choose CREATE PROJECT FILE and perhaps call it "Testing" to become familiar with the program. Afterwards, you can give specific names such as a project name or the name of a client.
2. After you have chosen CREATE PROJECT FILE and given it a name, click SAVE. This will lead you to a WALLS IN PROJECT FILE directory. Click ADD WALL, then choose the type of wall you want to design: cantilevered, restrained, tapered stem, or gravity wall. You can also choose WALL WIZARD to help you.
3. If you choose WALL WIZARD you will be led step by step with questions to answer regarding the criteria you want to use for your design. When you have finished entering data, it will be automatically inserted into the next screen, CRITERIA, ready for you to continue with your design.
4. If you skip WALL WIZARD and instead choose, for example, ADD CANTELEVERED WALL you will be first prompted to enter the information for this design (job title, number, designer, etc.).
5. To continue with your design you proceed from left to right with the tabs at the top of your screen, proceeding from CRITERIA to LOADS to STEM and finally to FOOTING. You will note that for each 'tab' there are 'sub-tabs' asking you for additional criteria input. Pay particular attention to the OPTIONS sub-tab.
6. When you complete your design you can also click tabs on the right side of your screen for a schematic construction drawing of your design, a wall loading diagram, stem moment and shear envelope curves. You can click Save to put your design into the Walls In Project File directory, or Exit to return you to the WALLS IN PROJECT FILE screen. You may also click PRINT to print your calculations, or SAVE to place it in the WALLS IN PROJECT FILE directory.

Remember that for help you can click on QuickHelp (on the Task Bar) to get explanations of entries.

To make a DXF file, select Make DXF from the task bar. It will prompt you for additional information, such as a file name. When imported to CAD, some editing will be required.

Remember that HELP can also be selected from the tool bar, where you have choices of the Topic Index and Tutorial. The tutorial topics can be particularly helpful as you learn.

Note that the Construction Drawing and Diagrams will initially show only a default image and will not display completely until you have finished your design, since it does not have enough data. We suggest you do not access these tabs until you have finished a design.

The START MENU Screen

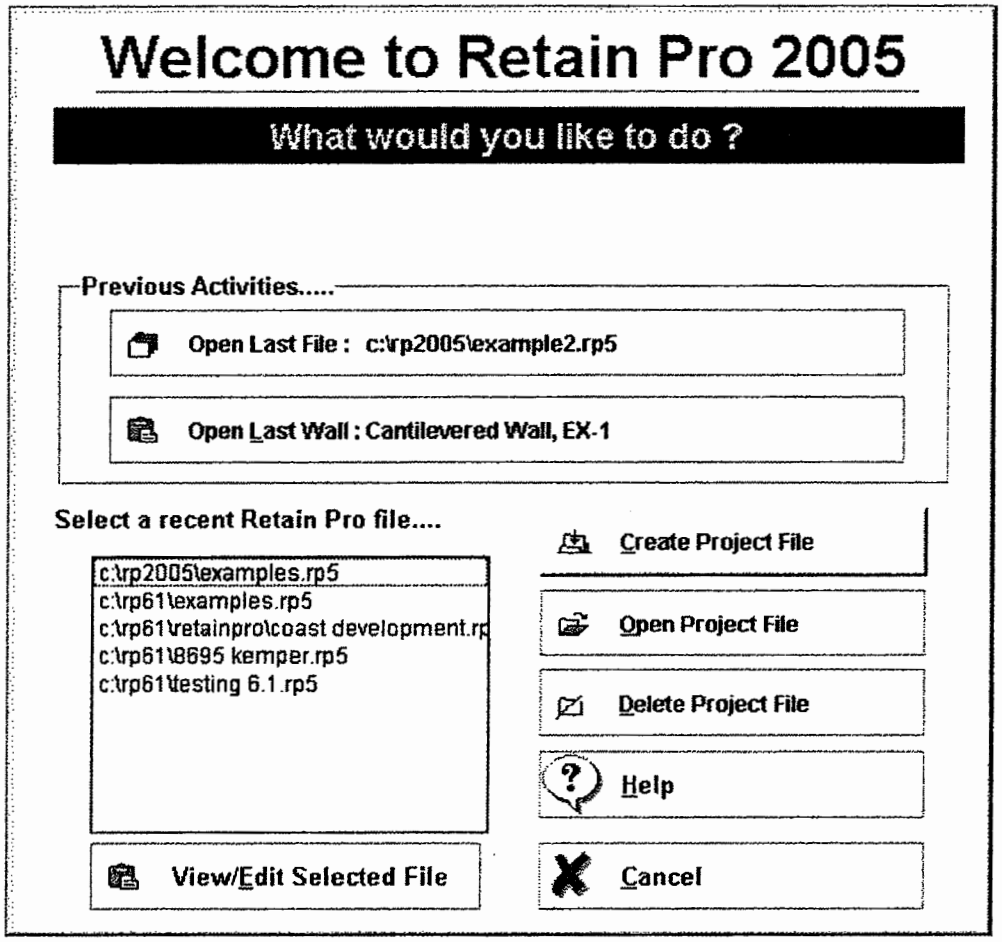

When you start the program you will first see a Welcome To Retain Pro 2005 screen (shown above) subtitled "What Would You Like To Do?" This will be the initial screen from which you choose the design paths you wish to follow. You will be offered a number of choices:

Previous Activities will offer these choices:

Open Last File enables you to quickly go to the last project file you were working on.

Open Last Wall enables you to pick up where you left off with your last wall design.

Select a Recent Retain Pro File will give you a listing of recent project files you have used. By highlighting any one of them and clicking **View / Edit Selected File** below you can access it.

Create Project File is used to create a Project File which will contain one or more walls designed for that project folder.

Open Project File will display a complete list of project files from which you can make a selection.

Delete Project File will delete the highlighted file.

Help will lead you to four choices for getting help.

Cancel will return you to the TOOL BAR.

Each of these procedures will be described later.

The Tool Bar

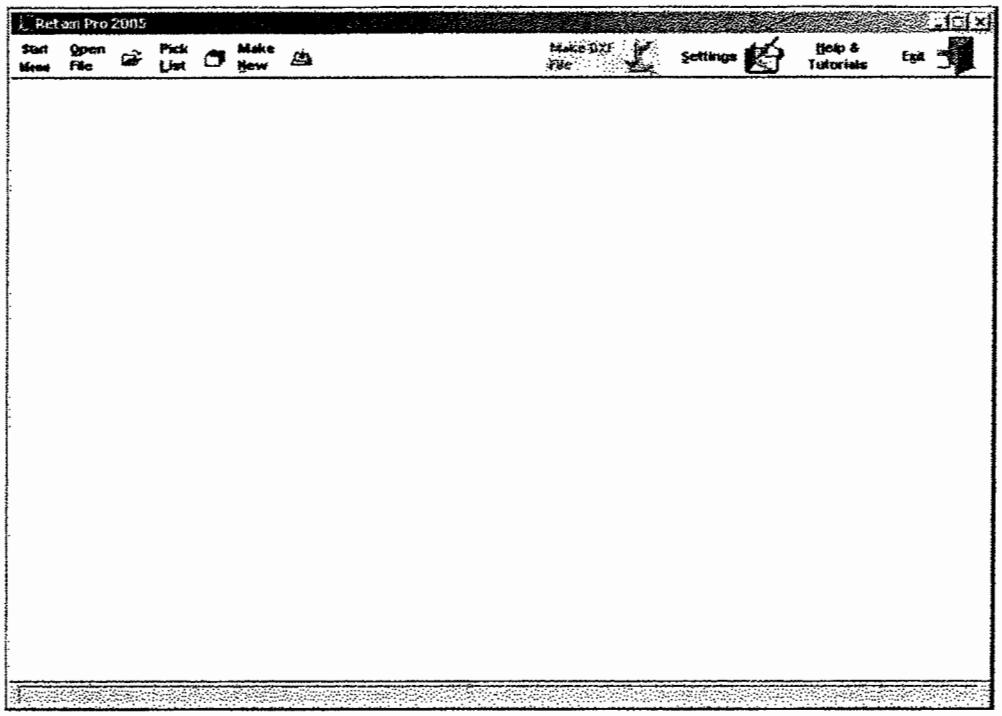

Across the top of all screens will be the **Tool Bar**, which will offer nine choices. Some of the choices may be dimmed for certain screens when they are not applicable or available.

Start Menu returns you to the Welcome / start-up screen.

Open File is to access a project file you have already created.

Pick List offers you a quick way to view and select recently used project files.

Make New is for creating a new project file (such as for a client or a specific project). Choosing this leads to the Create New Retain Pro Project File window.

Save As allows you to save the currently open to a file with a different name. This will be dimmed except on the Walls in Project Files screen.

Save Defaults is dimmed except when working on a wall design. This button saves the input values in the current wall design as default values for subsequent new wall designs.

Make DXF File leads to the dialog box Select DXF File Options.

Settings leads to a Global Settings screen, which allows you to create or change your title block and/or logo.

Help & Tutorials offers seven choices:

> **Topic Index**, where you can scroll to select a topic that you'd like explained.
>
> **Tutorial**, where you can scroll through a list of get-started topics.
>
> **FAQs** directs you to **www.retainpro.com/support** where common technical FAQs are accessible, and updated frequently.
>
> **Email Support** will connect you to the Internet and give you a ready-to-use screen where you can ask a technical support question and email it to our staff.
>
> **FAX Support** gives you a form ready for you to fill out, print, and FAX to our support staff.
>
> **This Version** will give you information about the Retain Pro version you are currently using.
>
> **Access User's Manual** allows you to download the complete User's Manual (in Adobe Acrobat .pdf format) for viewing and printing. Pertinent sections of this manual will also be accessed from each screen via the QuickHelp tab..

Open Project File / Make New Project File

Choosing **Open File** from the Task Bar will display the Open Retain Pro Project file window selection dialog, shown below. Use it to access a project file you have previously created. All Retain Pro for Windows files use a file extension of "rp5". No other index files are required. Here's an image of the Windows file dialog ready to choose "Open" to load the "examples.rp5" file from the C:\rp2005 location:

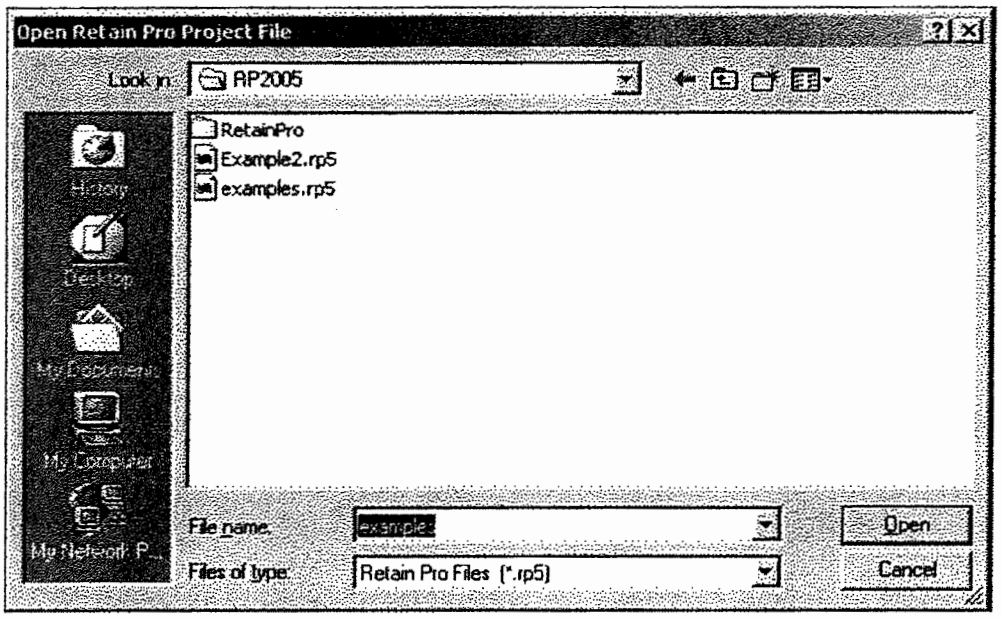

Use **LOOK IN** to select the sub-directory you are using. Typically it will say "RP2005". Select any of the project files listed and click OPEN. The installation disk comes with the file **examples.rp5** (the extension .rp5 is for compatibility with files you convert from earlier versions of Retain Pro) which contains nine example problems for your review and reference. We suggest you do not alter them. They are the same as the Sample Calculations and Printouts at the end of this User's Manual.

If you had chosen **Make New**, you would see a similar dialog window, but with other project files dimmed. You would then type in the name of the new file in **File Name**, for example, "Baywood Development." You do not need to type the .rp2005 extension—the program will add it automatically.
When you click Save (for a New Project File name) or Open to access an existing file, you will next see the **Walls in Project File** window.

Walls in Project File window

This screen is the central control screen for working with the wall designs in a Retain Pro project file directory.

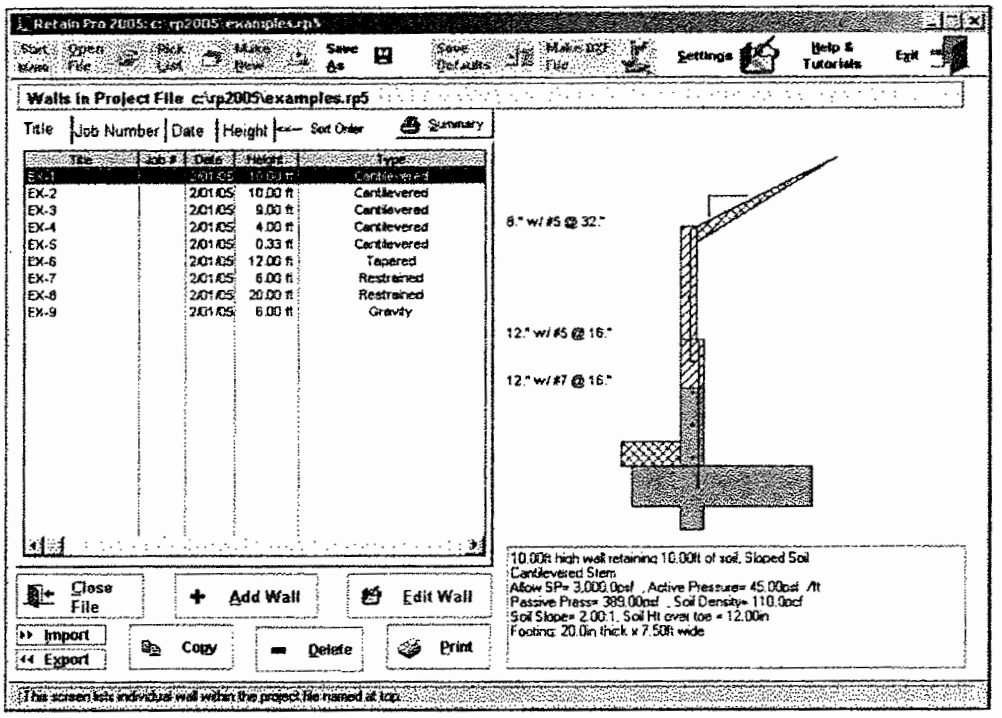

The left side of the screen lists walls that were already completed and stored in the file RP2005/EXAMPLES. The right side shows a schematic drawing of the highlighted wall, for your reference, and below, basic data about the wall below the sketch.

If you had started a new project file, say BAYWOOD DEVELOPMENT per the earlier sample, this screen would have no entries until you click the Add Wall button, filled in the new job information, then clicked OK to place the wall into this file list.

Along the top are a series of "Tabs" that control the sorting of the walls listed. This way, you can view the walls in order of Title, Job Number, Date, or Height for faster access to the wall you wish to use.

The Bottom Buttons

At the bottom of the Walls In Project File window are the following buttons:

Close File Add Wall Edit Wall
Import/Export Copy Wall Delete Wall Print

They perform the following functions:

Close File returns you to a blank screen with just the TOOL BAR displayed.

Add Wall is used to add a new retaining wall design in the Retain Pro project file you have highlighted. Description of this entry follows

Edit Wall displays the design criteria for the highlighted wall.

Import allows you to choose another Retain Pro file, browse the walls in that file, and select one to bring into the file you are now using. This is a fast and easy way to a previous wall design copied to a new job file.

Export allows you to put the highlighted wall design into another Retain Pro file. When you press Export you will be prompted for a Retain Pro file to export into with the standard Windows file selection dialog. After selecting a file, the currently highlighted wall will be placed into that file.

Copy copies the complete file you are using to a new file name. After choosing the Copy button, you will be prompted to enter a new file name. Retain Pro will place all walls from the current file (showing near the top of the window) to the name you've entered. To copy just one wall design, use the Import button.

Delete deletes the highlighted wall design from the file (you will be asked to verify first).

Print the currently highlighted wall to the Windows printer of your choice. You can also choose to preview your calculation print-out page.

Summary Button will print a summary of designs in the Walls in Project File directory.

Updating Load Factors

When a specific wall is selected from a Version 6.0 Project Directory, a pop-up window will ask whether you want to update the wall design, which used load factors from version 6.0, to new version 2005 load factors. If you click Yes, you will be prompted to select a building code. The design will then be updated for strength design factors based upon the code you selected. If you want to change load factors, click on CalcInfo and select another code (for example, IBC to AASHTO), or go to the Load Factors tab and change factors.

Always check the Load Factors since you may have edited them differently from the default values.

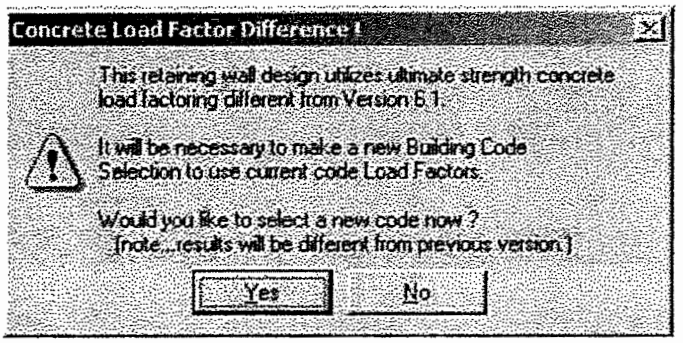

Pick List

This screen is a quick way to jump to any Retain Pro file, and then pick a Project file to edit or add a new wall design. Highlight the project file and click Edit File, or just double-click the highlighted file.

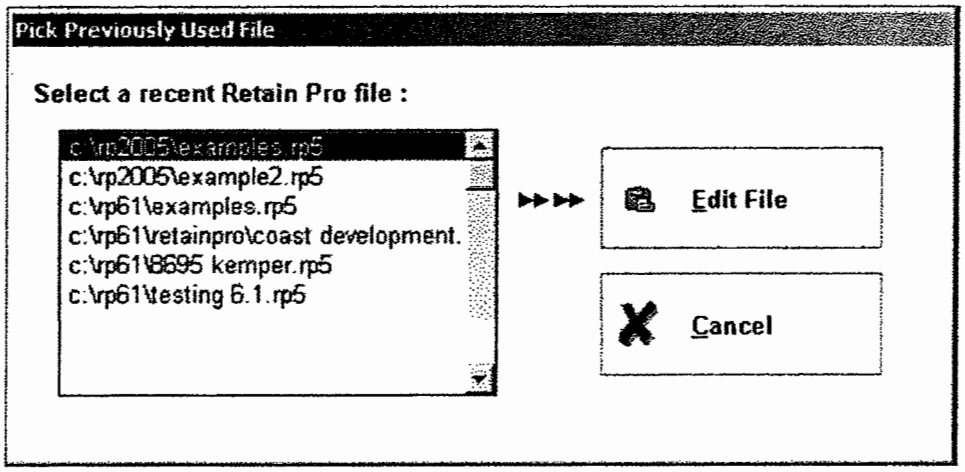

This tab is located on the Tool Bar and is only occasionally accessed

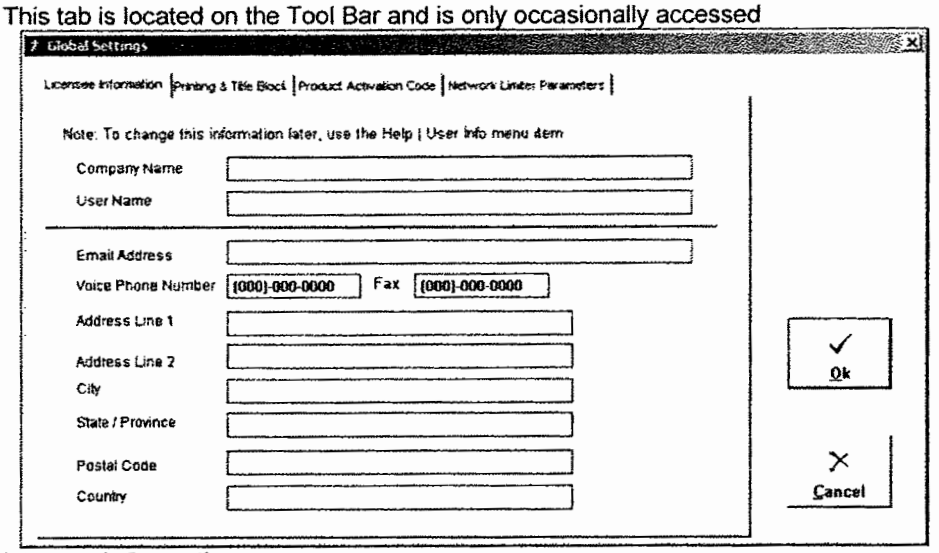

License Information

This is license information for you to fill in about your company, for your reference.

Printing and Title Block:

Use these five lines for your company name, address, and phone number which will appear on your calculation printouts. You can also enter your logo which will print on the title block. Files supported include BMP, JPEG, GIF, PIX and WMF files.

Product Activation Code (PAC)

Enter your Product Activation Code here. Your Registration Number and the number of authorized licenses (seats) will also be displayed.

Network Limiter Parameters

Displays information about your network use.

Updates This tab (not shown above) has prompts to set "days between update checks" and other criteria for managing Retain Pro 2005's auto update utility.

Choose Add Method Window

This screen appears when you select a wall in the WALLS IN PROJECT FILE, and press Add Wall

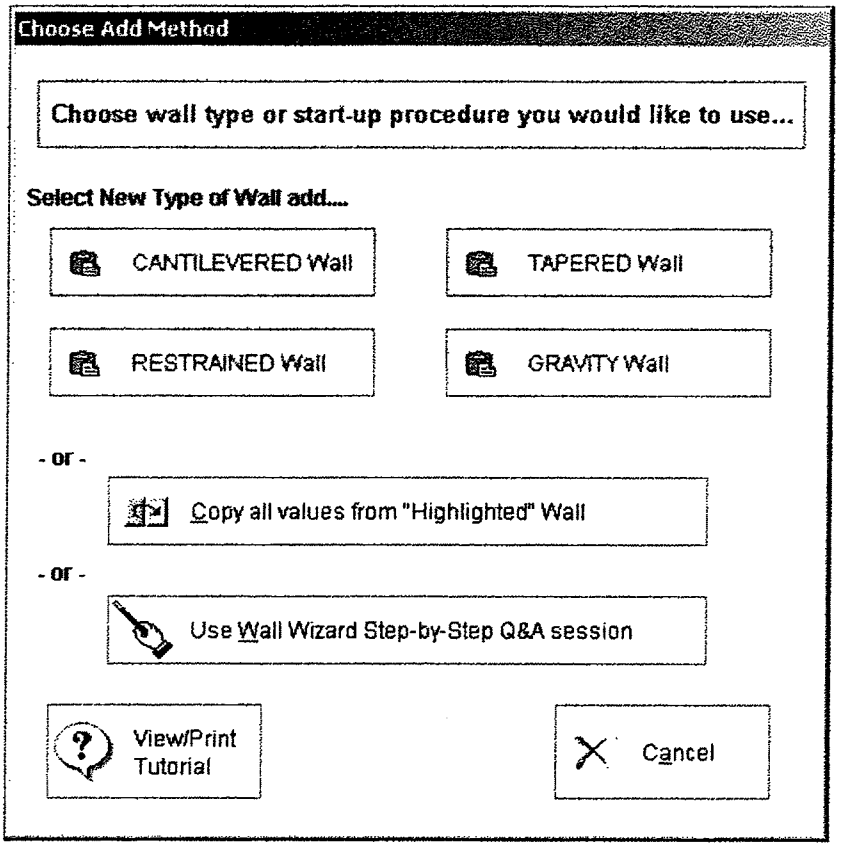

On this screen you select the type of wall you would like to design, or copy values from a previously designed wall, or use Wall Wizard

After selecting **Cantilevered**, **Restrained**, **Tapered**, or **Gravity** Wall, you will jump to the start of your wall design, where you add the Wall Specific Title Block Information. Having selected the type of wall you would like to design, the subsequent criteria and Stem Design Screens will automatically be set for this type of wall design.

If you select **Copy All Values from Highlighted Wall**, you will start with all the values from the currently highlighted wall and modify them as necessary for your new wall design. This is handy, for example, if you're making a series of designs for changing heights or conditions along a long length of wall (e.g., retaining 12', 10', 8', 6', and 4').

Selecting **Wall Wizard** will open a series of questions to answer about your specific design. The answers will be input to the Criteria awaiting your finishing the design. When you become familiar with Retain Pro you will probably not use Wall Wizard.

Clicking **View/Print Tutorial** will display a drop-down menu to select a topic to help you get started. The Tutorials are also available from the Help tab.

Clicking **Cancel** will return you to the WALLS IN PROJECT FILE screen.

Note that if you are starting a **New Project file** this window will also appear if you are starting a wall design in a new project file. However, in this case there will be no previous walls in the Project File, so the Copy From Selected Wall option will not appear, and your only option is to choose Use Default Values.

Using Wall Wizard

From the CHOOSE ADD METHOD if you select **Use Wall Wizard Step-By-Step Q & A Session** you will be led through a series of questions regarding the wall you are designing. This feature will be especially helpful for new users.

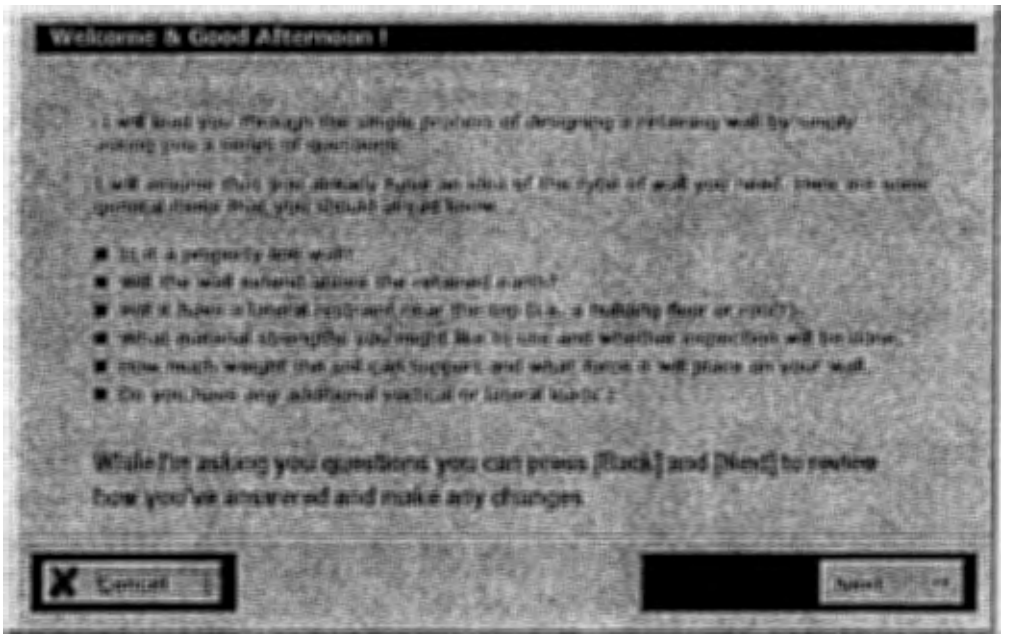

You can answer the questions and at any time press **Back** and **Next** to review how you have answered and make any changes.

The first screen you get will prompt you for information that will appear on your title block such as job title, job number, designer, date, and description. This screen is essentially the same as the WALL DESIGN TITLE INFORMATION, which will be described in the next section

After entering the wall title information, you will be shown seven icons for selection for the type of wall you will be designing. For example, a property line wall on the toe side, a restrained wall, or a gravity wall.

This will lead you through a series of questions such as whether there is a soil slope behind the wall, height of soil over the footing, soil bearing value, weight of the soil, design method (equivalent fluid pressure, Couloumb, for Rankine method) lateral loads on the wall, axial loads, adjacent footing loads, material allowable stresses, and other design option questions.

When you are done, click FINISH and this information will be put into the proper places for the wall that you will proceed to design.

Wall Specific Information (CalcInfo)

This CalcInfo tab is where you enter information about your wall design. It is the first screen in the Sequence Tabs which appears after choosing from the **Choose Add Method** box, or using **Wall Wizard.** Enter specific information about the wall that you are currently designing. "Job Title" will also appear on the **Project Walls File** listing.

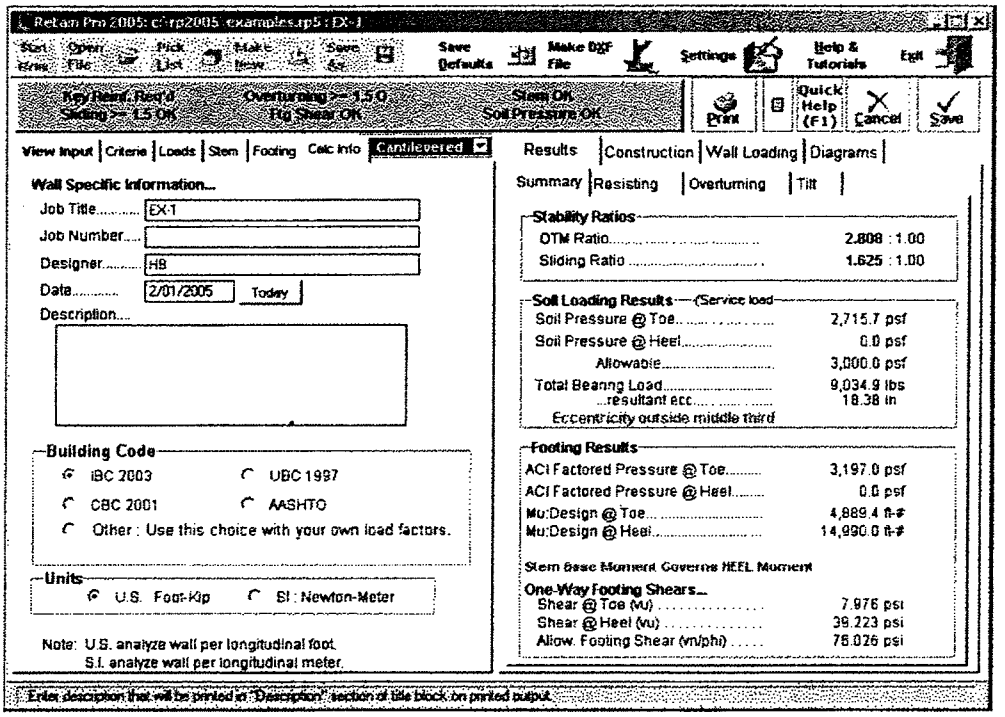

The Wall Design Title Information you enter will appear on your printouts.

The information you enter here will appear on your **Walls In Project File** screen. Ignore warning messages and data on the right side, which may be carried over from an earlier or uncompleted design. At the bottom of the screen you can select either U.S. or S.I. units that will apply to this wall only.

Select the applicable building code for your project and the proper load factors will be applied (for Strength Design). Check the load factors since you may have edited them differently.

Design Sequence Tabs

The tabs across the top of your worksheet screens can be called the Design Sequence Tabs.

You will use them in sequence—left to right—as you proceed with your design (An exception is the Calc Info tab at right. It will contain the Wall Specific Information you entered earlier, or you can change it here.

Each of these tab contents will be described later, but here is a brief description of each, and of their sub-tabs:

Visual Input

On this screen, which is optional -- you may prefer to skip right to Criteria to enter your data -- you can enter data so you can see what you are doing. This drawing will not change as you enter data, however, the Construction Drawing (tab on right side of screen) will reflect your changes. Your input on this screen will be automatically placed on the following Criteria screen, ready for you to proceed with your design.

Then the following left-to-right tabs and sub-tabs:

Criteria

General Data	For entering basic design criteria
Material Data	Enter/change material data
Options	Check boxes for design procedure options
Load Factors	Select building code and review or change load factors.

Loads

Vertical Loads	Enter all applicable vertical loads
Lateral Loads	Enter all applicable lateral loads
Seismic Loads	Enter seismic design criteria, if applicable

Stem (will be set to type of wall below, based upon what you previously selected).

Cantilevered	Wall not restrained at top—free to rotate
Tapered	Battered inside face (for concrete stems only)
Restrained	"Basement" or tieback walls with restraint at or near top.
Gravity	Battered on both faces and usually unreinforced, dependent upon bulk weight to resist overturning.

Footing

Footing Dimensions	Enter trial toe, heel, thickness
Key Dimensions and Sliding	Sliding design, if required

Calc Info For entering your Wall Specific Information (Usually already completed).

On the right side of your screen these tab and sub-tabs:

Results

Summary	Displays the basis design results
Resisting	Tabular listing of resisting forces
Overturning	Tabular listing of overturning forces
Wall Tilt	Enter soil modulus to calculate tilt of wall.

Construction	Displays to scale a drawing of the data you hav entered.
Wall Loading	Graphically displays the forces on the wall.
Diagrams	Shows envelope curves of moments and shears.

The use of this screen is optional, and will be primarily helpful to novices. You can enter most of the input for your specific wall design here. The information you enter will be automatically transferred to the next tab, CRITERIA, ready for you to proceed with your design. Conversely, info entered on criteria screen will be displayed here.

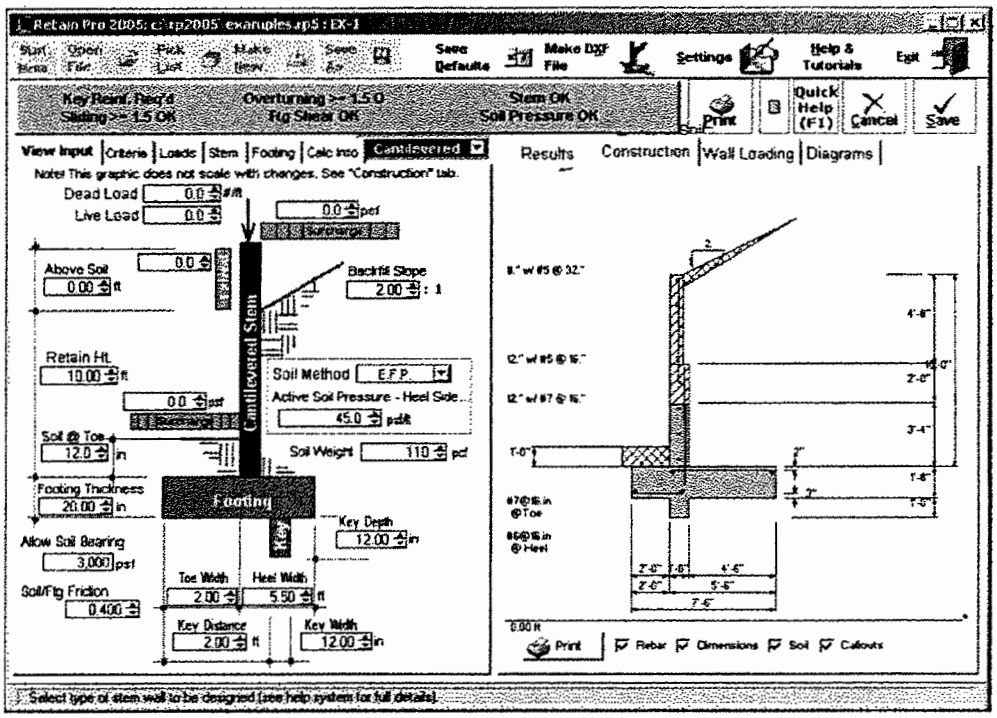

Please note that as you enter dimensions the displayed wall will not change. However, if you click Construction Drawing, you will notice a changing after each entry. Initial value displayed will be Default Values.

Warning messages and data on right side of screen can be ignored when starting your input, since it may have carried over from a previous or uncompleted design.

Reference Diagram For Dimensional Conventions Used

To assist you in referencing the entries in Retain Pro's data entry locations, here is a drawing of a typical wall with the major entries shown.

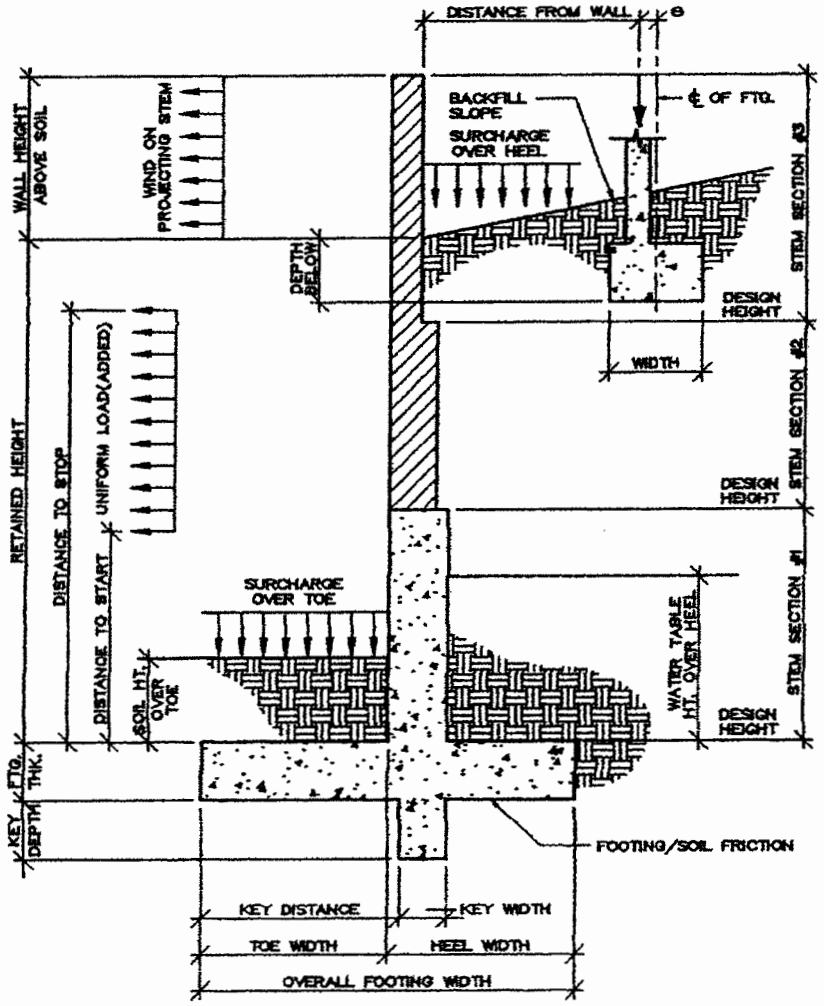

On this sub-tab of CRITERIA you enter the basic design criteria.

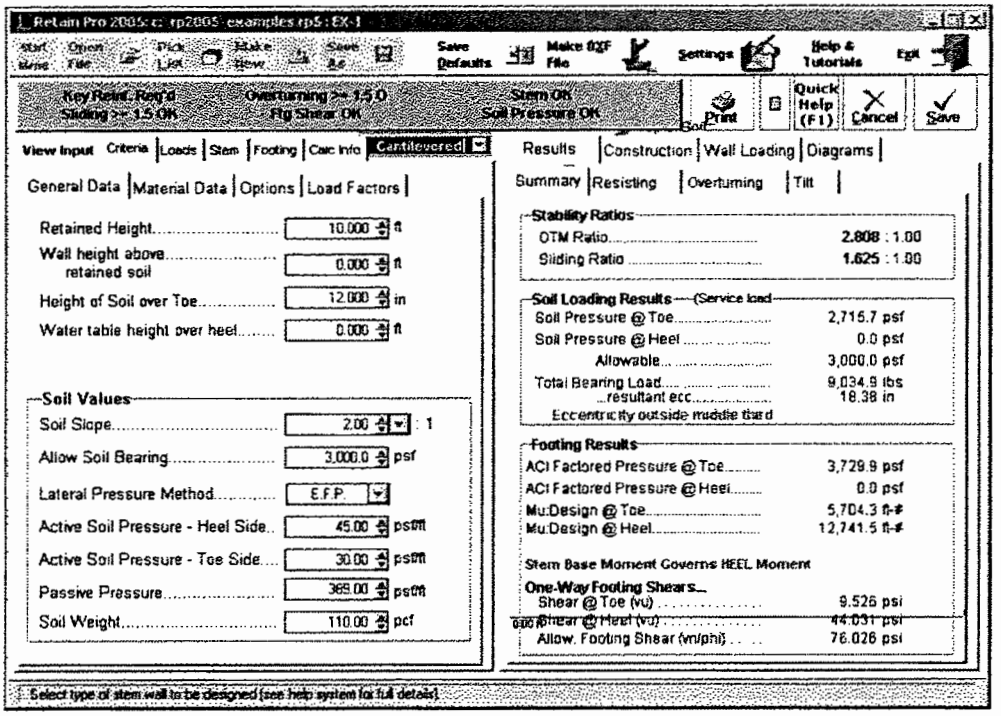

✍ Retained Height:

This is the height of retained earth measured from top of footing to the top of soil behind the stem (over the heel). When the backfill is sloped, the soil will slope away and upwards from this height.

The actual retained height used for overturning and soil pressure calculations will be the retained height projected at the vertical plane of the back of the heel, but for stem moments, no such increase will be made.

Using the spin-buttons you can vary this in 3-inch increments (you can type in any number). **After each entry you can press the tab key to advance to the next entry, or use your mouse to position the cursor.**

✍ Wall Height Above Retained Soil

Use this entry to specify if the wall extends above the retained height. This entry is typically used to define a "screen wall" projection above the soil retained. This extension can be used as a weightless "Fence" or a concrete or masonry stem section without any soil retained behind it. You can enter wind load on this projection using the entry "Load @ stem above soil" on the "Loads" tab. We'll handle the fence when we get to the STEM design screen. TOTAL HEIGHT OF WALL = "RETAINED HEIGHT" + WALL HEIGHT ABOVE RETAINED SOIL".

✍ Height of Soil Over Toe

Measured from top of footing to top of soil on toe side, this may vary from a few inches to a few feet (it is input in inches) depending upon site conditions. It is used to calculate passive soil resistance (but its effective depth can be modified by the "Ht. to Neglect" entry on the Footing > Key Dimensions & Sliding tab). This depth of soil is also used to calculate a counter-overturning moment, and reduce net lateral sliding force. You can negate the latter effects on the Options screen.

✍ Water Table Height Over Footing

If you want to design for a water table condition, enter the maximum height from top of footing to water table level. The program will then compute the added pressures for saturated soil on the heel side of the footing, including buoyancy effect, to calculate increased moments and shears on the stem, and overturning. Don't enter a height more than the retained height, nor a liquid other than water. If the water table is near the top of the retained height, suggest using saturated soil density and active pressure for the full retained height.

✍ Soil Slope

You may enter any backfill slope behind the wall. Use the drop-down menu or type the slope ratio as Horiz/Vert. The soil must be level or slope upward. Negative backfill slopes (grade sloping downward, away from the wall) are not allowed.

The program will use this slope to 1) include the weight of a triangular wedge of soil over the heel as vertical load, and 2) compute overturning based upon an assumed vertical plane at the back face of the footing extending from the bottom of the footing to ground surface – a steeper slope will result in a higher overturning moment. We suggest not using a slope steeper than 1.5 to 1.0 unless approved by the geotechnical engineer. The program will not accept a backfill slope steeper than the angle of internal friction.

✍ Allowable Soil Bearing

The maximum allowable soil bearing pressure for static conditions. Using the spin buttons you can increment in 50 psf steps. Usual values for this vary from 1,000 psf to 4,000 psf or more.

✍ Lateral Pressure Method

Here you can choose between E.F.P. or Rankine formula or Coulomb formula. EFP means "Equivalent Fluid Pressure," where you can enter a lateral soil pressure in psf per foot of depth. "Rankine" or "Coulomb" instructs Retain Pro to use the Rankine or Coulomb Method to calculate active and passive soil pressures using an entered angle of internal friction for the soil. When Rankine or Coulomb is chosen, the Ka*Density value for active pressure is computed.

✍ Active Soil Pressure - Heel Side (EFP Method Chosen)
Active Pressure: Ka * Gamma (Rankine or Coulomb Method Chosen)

Enter the equivalent fluid pressure (EFP), or the angle of internal friction if Rankine or Coulomb is chosen, for the soil being retained that acts to overturn and slide the wall toward the toe side. This pressure acts on the stem for stem section calculations, and on the total footing+wall+slope height for overturning, sliding, and soil pressure calculations.

Commonly used values, assuming an angle of internal friction of 34°, are 30 pcf for a level backfill; 35 pcf for a 4:1 slope; 38 pcf for a 3:1 slope; 43 pcf for a 2:1 slope; and 55 pcf for a 1.5:1 slope. These values are usually provided by the geotechnical engineer. If the Rankine or Coulomb method had been chosen, these values will be computed using those formulas.

When the retained soil is sloped, a vertical component of the lateral earth pressure over the heel can be applied vertically downward in the plane of the back of the footing. You can choose to apply this force for overturning resistance, sliding resistance, and/or for soil pressure calculations, by checking the boxes on the CRITERIA > Option screen. It is recommended to use the vertical component only to resist overturning.

✍ Angle of Internal Friction (Rankine or Coulomb Method Chosen)

This value is entered in degrees and is the angle of internal friction of the soil. This value is usually provided by a geotechnical engineer from soils tests, but can also be found in reference books or building codes for various typical soil classifications. This value is used along with Soil Density within the standard Rankine and Coulomb equations to determine "K_a" and "K_p" multipliers of density to give active and passive soil pressure values.

✍ Active Soil Pressure - Toe Side

If the EFP method is chosen, enter the active pressure to be used on the toe side of the wall. This active pressure is used along with the "Soil Height over Toe" value (entered on the Sliding tab) to calculate a stabilizing soil force on the wall. This front side of the wall is assumed to be level.

When either the Rankine or Coulomb method is chosen, the angle of internal friction is used in the Rankine formula with an assumed level toe-side slope.

The active pressure from soil over the toe counteracts the heel-side active pressure to reduce net overturning and net sliding force.

✍ Passive Pressure (EFP Method Chosen)
Passive Pressure: Kp * Gamma (Rankine or Coulomb Method Chosen)

This is the resistance of the soil in front of the wall to being pushed against to resist sliding. Its value is in psf per foot of depth (pcf). For the E.F.P. method, you input this value, which is usually obtained from the geotechnical engineer. If the Rankine or Coulomb method is chosen, it will be computed and entered for you. Its value usually varies from 100 pcf to about 350 pcf.

✍ Soil Density

Enter the soil density for all earth above the toe and heel of the footing. This weight is used to calculate overturning resistance forces and soil pressures using the weight of the soil block over the projecting toe and heel of the footing. When surcharges are applied over the soil, the surcharges are transformed to equivalent uniform lateral loads acting on the wall by the ratio force = (Surcharge/ Density)*Lateral Load. Input this value in lbs. per cubic foot. Usual values are 110 pcf to 120 pcf. More if saturated soil.

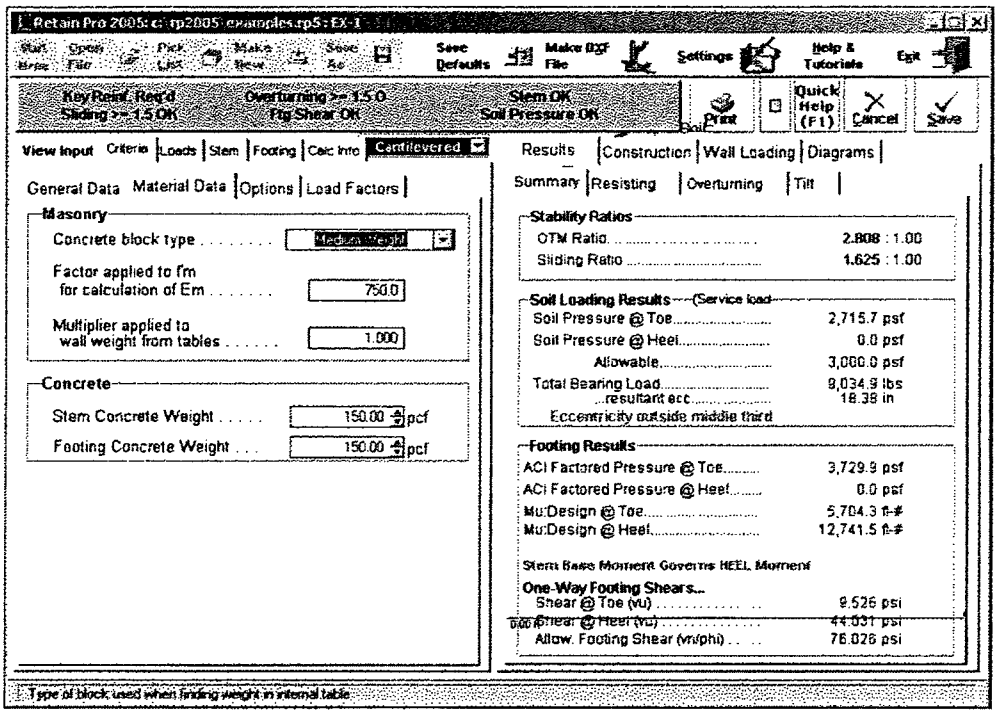

On this screen you can change properties of masonry and concrete.

For Masonry:

✍ Concrete Block Type

This allows you to select Lightweight, Medium weight, or Normal weight concrete masonry units.

✍ Factor Applied to f'_m for Calculation of E_m

The modulus of elasticity for masonry is 750 f'_m per UBC '97 2106.12.1 and 900 f'_m per IBC '03. This entry allows you to select the desired multiplier.

✍ **Multiplier Applied to Wall Weight from Tables**

This entry allows you to increase or decrease the internal default values of stem weights, as displayed on the STEM screen.

For Concrete

✍ **Stem concrete weight**

This is usually 145-150 pcf, but may be changed with this entry.

✍ **Footing concrete weight**

This option is necessary since if there is any buoyancy effect, this will reduce the effective weight of the footing concrete.

This screen is critical to your design, since many subsequent calculation results will be affected. Review and check these boxes carefully.

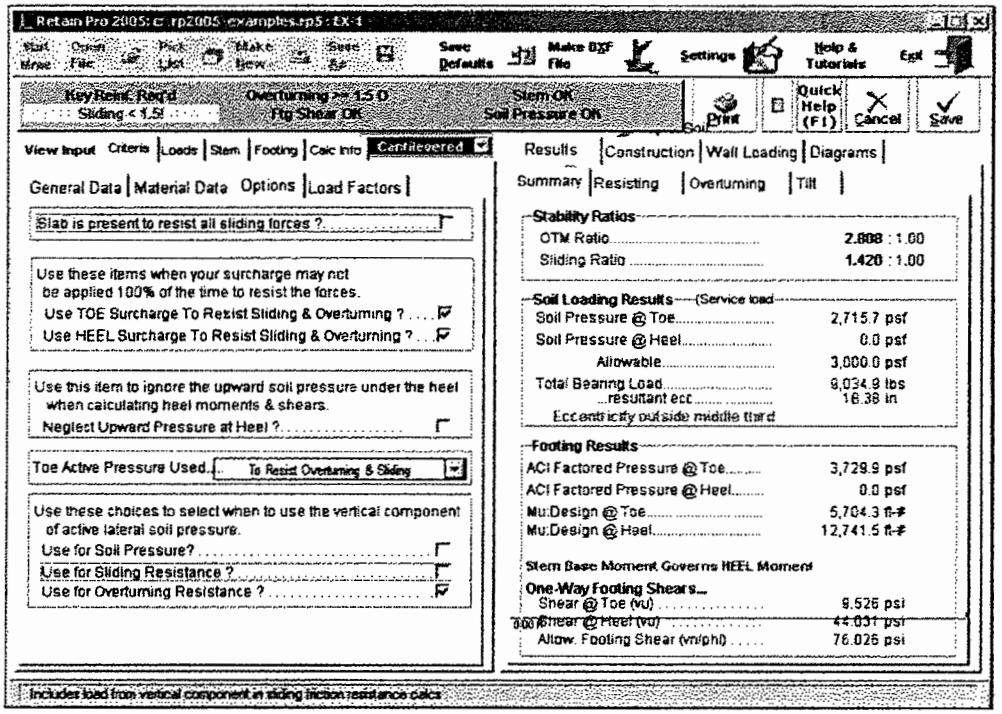

☑ Slab is Present to Resist all Sliding Forces

Check this box when a slab is in front of the wall to resist lateral sliding.. When this box is checked, sliding is not a design issue – passive and friction resistance are ignored -- but the lateral sliding force is displayed for checking the resistance offered by the slab.

It has a similar effect for restrained walls. allow it to be placed higher—if this condition occurs, append your printout with hand-calcs,

The slab is assumed to be at the top of the footing – not higher.

☑ **Use Toe Surcharge to Resist Sliding and Overturning**

Checking this box will include the weight of soil overburden on the toe to resist overturning and add to its weight for frictional resistance.

☑ **Use Heel Surcharge to Resist Sliding and Overturning**

Checking this box will include heel surcharge. If surcharge is live load and its use would be non-conservative, don't check this box.

☑ **Neglect Upward Pressure at Heel**

For heel calculations you may choose to neglect the upward soil pressure, typically resulting in greater heel moment. If this box is checked the M_u for upward loads will be zero.

☑ **Toe Active Pressure Used**

Checking this box will apply the toe side active pressure to reduce overturning moment and reduce sliding force to a net sliding force to be resisted.

☑ **Choices for Use of Vertical Component of Active Pressure**

The vertical component of the lateral pressure is applied at a vertical plane at the back of the footing. You can optionally use this to resist overturning, sliding, or for soil pressure calculations. (For the latter it can make a considerable difference). Checking these boxes applies the options. For a level backfill, this option will back-solve the EFP method to find the equivalent internal friction angle, then apply this vertical component equal to $\tan\beta$. If either the Rankine or Coulomb method had been chosen, this vertical component would be tangent of $\phi/2$.

Note that most texts suggest using the vertical component only to resist overturning. For a level backfill these options are usually not used.

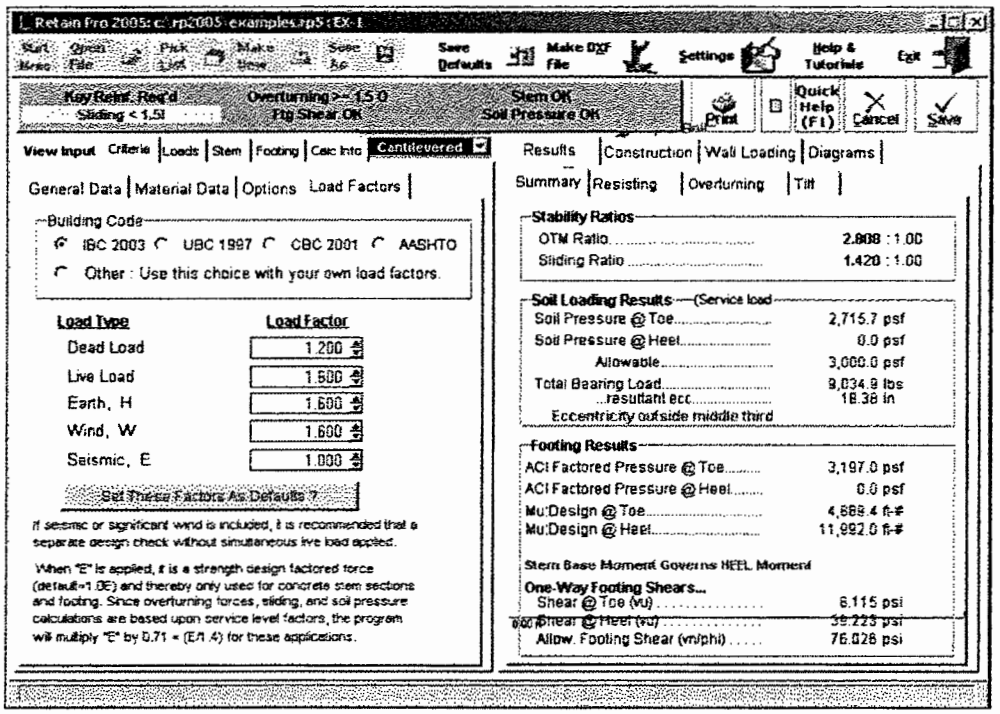

Building Code

Select from IBC 2003, UBC '97, CBC '02, AASHTO, or "Other". When "Other" is selected you can enter load factors you choose for a specific design.

Load Type / Load Factor

For each type of load (DL, LL, etc) the default factor will be displayed. You can change them and set new defaults, but remember to review them for a new design..

NOTE: The above factors apply to Strength Design (concrete stem sections and footing). For Allowable Strength Design, used for masonry, all factors are set at 1.0 except earthquake (E) is 1/1.4 = 0.71, to convert strength-based E to a service load.

Additional loads on the wall are entered on these sub-tabs.

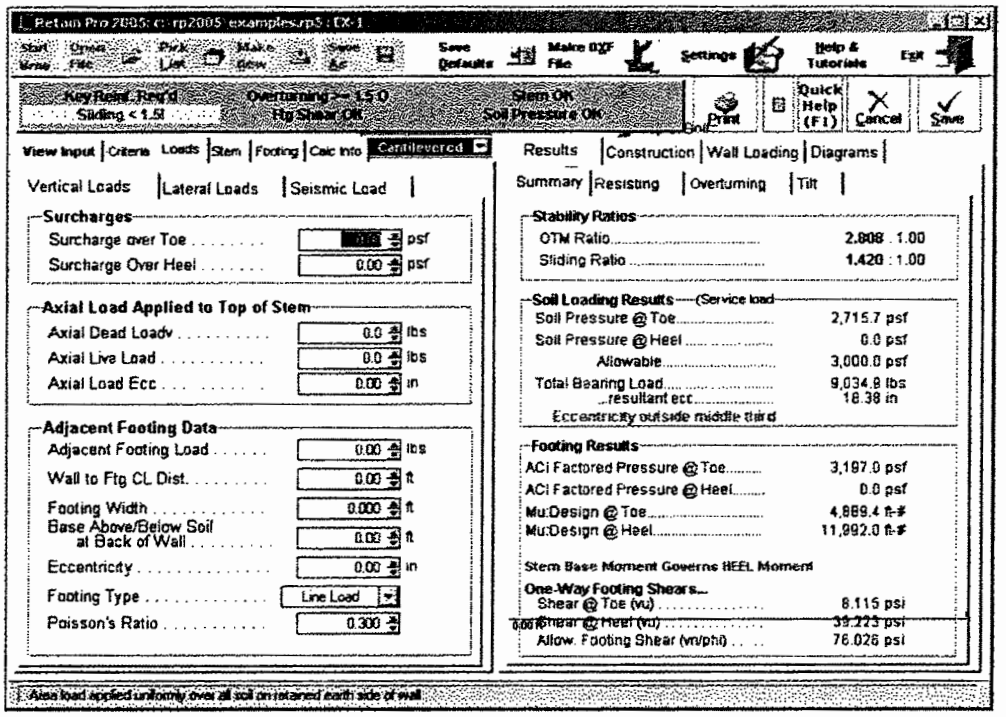

Surcharge Over Toe

This surcharge is treated as additional soil weight – if the surcharge is 240 psf and the density is 120 pcf, then the program uses two feet of additional soil. Similarly, if 50 psfsf is added for the weight of a slab over the footing, this will be equivalent to 0.41 feet of soil (50 / 120). This surcharge will affect sliding resistance and active toe pressure. Consider this if modeling a point load toe surcharge.

✍ Surcharge Over Heel

This surcharge is considered uniformly applied to the top surface of the soil over the heel. It may be entered whether or not the ground surface is sloped, but it is unlikely a surcharge could apply to a sloped backfill. This surcharge is always taken as a vertical force. This surcharge is divided by the soil density and multiplied by the Active Pressure to create a uniform lateral load applied to the wall. You can choose to use this surcharge to resist sliding and overturning by clicking the box on the CRITERIA > Options sub-tab.

✍ Axial Loads Applied to Top of Stem

These loads are considered uniform load along the length of the wall. They are applied to the top of the topmost stem section and affect the design of masonry stems only. The dead and live loads are used to calculate stem design values and factored soil reaction pressures used for footing design. Only the dead load is used to resist overturning and sliding of the retaining wall. AVOID A HIGH AXIAL LOAD (say over 3 kips plf – DL + LL) SINCE IT COULD CAUSE A REVERSAL OF BENDING IN THE HEEL.

✍ Axial Load Eccentricity

This is the eccentricity of the axial load with respect to the centerline of the uppermost stem section. The eccentricity moves the load toward the toe, causing bending moments that are additive to those caused by the lateral soil pressure over the heel. Negative eccentricities are not accepted.

✍ Adjacent Footing Load

This entry gives you the option of placing a footing (line, strip, or square) adjacent and parallel to the back face of the wall, and have its affect on the wall included in both the vertical and horizontal forces on the wall and footing. Refer to the General Reference Diagram for locations where input measurements should be taken.

For "Line (Strip) Load" the entry is the <u>total load per ft.parallel to the wall</u> (<u>not</u> psf).

If the adjacent footing is specified as "Square Footing" (not line load), the load entered should be the adjacent footing load divided by its dimension parallel to the wall, giving a pounds per lineal foot value, as for a continuous (line) footing.

A Boussinesq analysis is used to calculate the vertical and lateral pressures acting on the stem and footing. The program uses equation (11-20a) in Bowles' *Foundation Analysis and Design*, 5th Edition, McGraw-Hill, pages 630.

When the Boussinesq analysis is used, the program may require additional computing time (hundreds of internal calculations are done after each entry), depending upon the speed of your computer. To avoid this delay (which occurs any time any entry is changed) we suggest you use a vertical load of zero until your data entry is nearly finalized. Then enter the actual footing load and modify your final values.

For adjacent truck or highway loading, it may be preferable to use a heel surcharge (uniform) of 250 psf (or more!) instead of treating it as an "adjacent footing."

Do not use this feature if the adjacent footing load is farther from the stem than the retained height, less the depth of the adjacent footing below the retained height, since at this distance it will not have significant effect on the wall.

✍ Footing Width

Width of the adjacent footing measured perpendicular to the wall. This is necessary to create a one-foot long by Width wide area over which the load is applied.

✍ Footing Eccentricity

This entry is provided in case the soil pressure under the adjacent footing is not uniform. Enter the eccentricity of the resultant force under the adjacent footing from the centerline of the footing. Positive eccentricity is toward the toe, resulting in greater pressure at the side of the adjacent footing closest to the stem. The program will use the vertical load and eccentricity and create a trapezoidal pressure distribution under the adjacent footing for use with the Boussinesq analysis of vertical and lateral pressures.

✍ Wall to Footing Centerline Distance

This is the distance from the center of the adjacent footing to the back face of the stem at the retained height. The nearest edge of the footing should be at least a foot away from the wall face – otherwise suggest using an equivalent heel surcharge instead. Do not use a horizontal distance greater than the vertical distance from the top of the footing to the bottom of the adjacent footing, since the effect on the wall will be insignificant.

✍ Footing Type

This drop down menu selection allows you to enter either an isolated footing using the "Square Footing" selection, or a continuous footing using the "Line Load" selection.

✍ Base Above/Below Soil at Back of Wall

Use this entry to locate the bottom of the footing with respect to the Retained Height. Entering a negative number places the footing below the soil. A positive entry would typically only be used when the soil is sloped and the footing resides "uphill". To insert a negative number, first type the number then press the "-" (minus) sign.

Note: If the "Adjacent Footing" is another retaining wall at a higher elevation, the Boussenesq analysis may be used for the vertical load applied to the soil from the wall, however the design must also consider the lateral (sliding) loads from that adjacent wall. This load could be applied as "Added Lateral Load", however this is at the discretion of the designer and is not within the scope of the program. Caution is urged for this condition. See discussion in the companion book: Basics of Retaining Wall Design.

- **Poisson's Ratio**

Since the resulting pressures are sensitive to Poisson's Ratio, there is an entry allowing you to select a ratio from 0.30 to 0.55. This value should be provided by the geotechnical engineer. A value of 0.50 is often assumed.

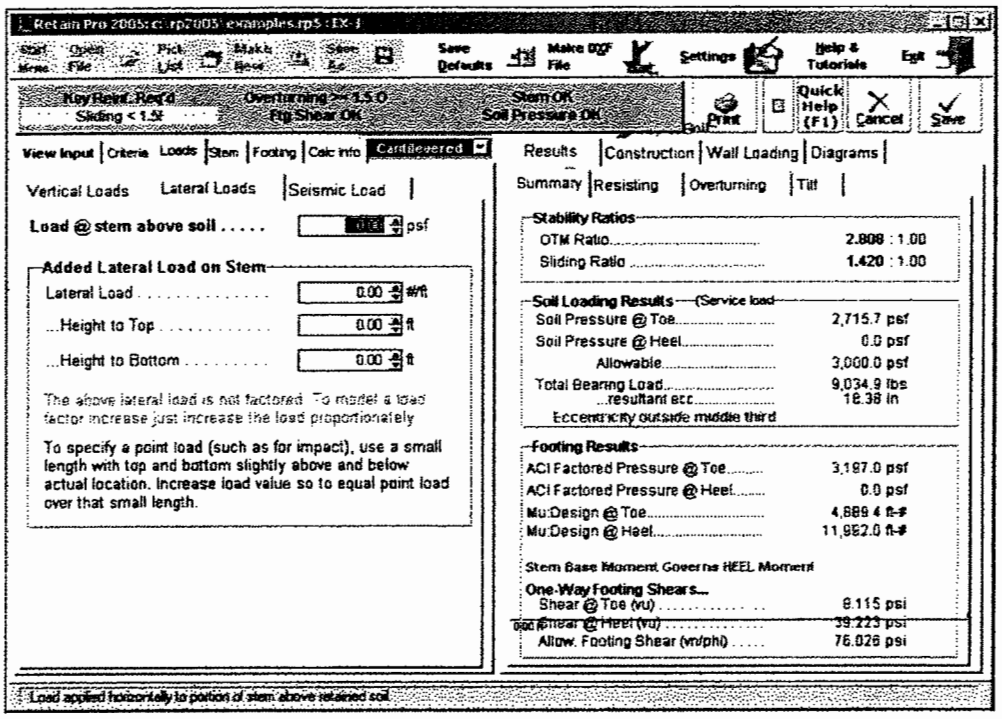

✍ Load @ Stem Above Soil

This load (typically a wind load) will be applied to that part of the stem projecting above the retained height defined by the entry "Wall height above retained soil." It is used to calculate overturning moment and shear, stem design moment and shear, and soil pressures. Customary values are 10 psf or higher. Only a positive "+" value can be entered (i.e., the force may only be applied in a direction to add overturning, in the direction of the active soil pressure).

✍ Added Lateral Load

This input allows you to specify an additional uniformly distributed lateral load applied to the stem.

This for an impact point load, such as due to an impact of a car or similar force, enter the load as a one foot high increment, separating the "Height to Bottom" and "Height to Top" by one-half foot (or meter).

This load is not factored! To apply a load factor (such as for an impact load), increase the applied load proportionately (e.g. an impact load of 1000 lbs requiring a load factor of 2.0 would be entered as 2,000 lbs).

A point lateral load can be reduced for the effect of its spreading horizontally at levels below the point of application..

✍ Height to Top

This dimension defines the upper limit of the added lateral load measured from the top of the footing. Do not enter a dimension higher than the top of the wall ("retained height" plus "Wall height above retained soil").

✍ Height to Bottom

This dimension defines the beginning (or bottom) of the added lateral load measured from the top of the footing.

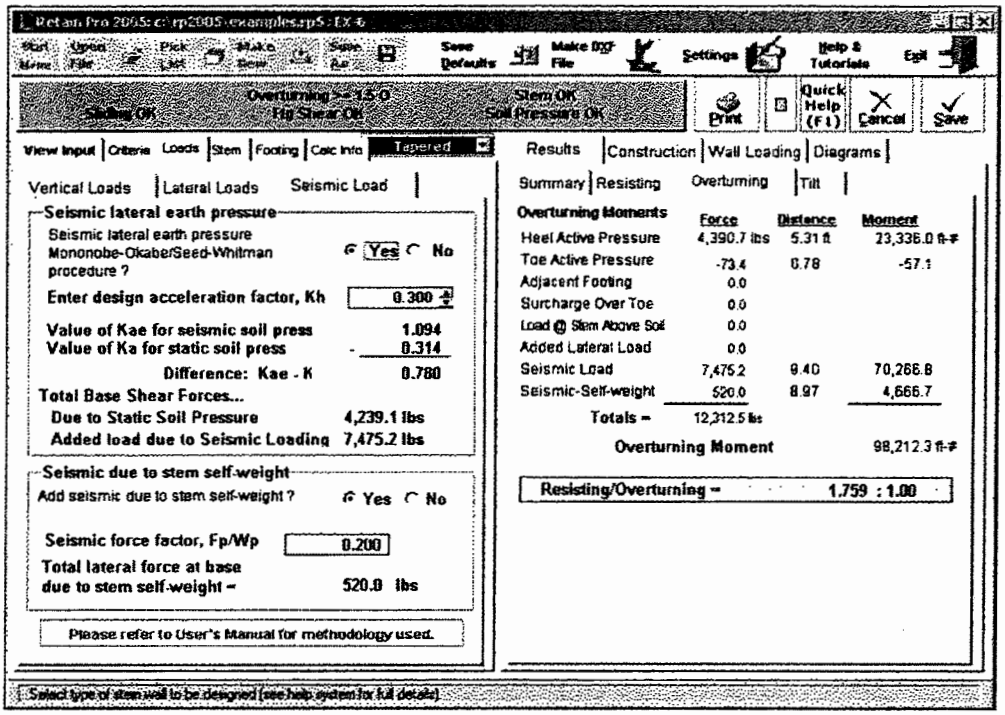

You can choose to apply seismic force from either lateral earth pressure or for wall self-weight, by selecting Yes / No for these options.

✍ Seismic Lateral Earth Pressure

Entering Yes, then entering k_h will activate the calculation of K_{AE} and K_A using the Mononobe-Okabe/Seed-Whitman equations if for a yielding wall (cantilevered). If it is a non-yielding wall (restrained) the added lateral force per square foot is computed using $F_w = k_h$(density)(retained height), in psf. Common k_h values range from 0.05 to 0.30, depending upon area seismicity.

Displayed will be both the static component soil pressure, and the added seismic.

✍ Seismic due to Self-Weight

Entering Yes, then Fp/Wp will apply a uniform seismic force in psf (k_h x (wall weight). If the wall has multiple stem sections, each will be calculated separately and accumulated for the base shear and moment.

NOTE: The k_h values entered are the design accelerations (not necessarily peak ground acceleration as may be given in a geotechnical report) and must be determined per procedures in the applicable code. They are then factored per Load Factors (generally 1.0 for concrete and 1/1.4 for masonry (for ASD).

The resultant is assumed to act at approximately 0.6 x retained height.

Methodology

The program computes K_{AE} (coefficient for combined active and earthquake forces) per the Coulomb formula, modified by Mononobe-Okabe/Seed-Whitman, to account for earthquake loading, where the term θ is the angle whose tangent is the horizontal ground acceleration. (Note that if $K_h = 0$, $\theta = 0$, then $K_{AE} = K_A$). Vertical acceleration is neglected, resulting in a more conservative K_{AE}.

K_{AE} = active earth pressure coefficient

$$= \frac{\sin^2(\phi + \alpha - \theta')}{\cos\theta' \sin^2 \alpha \sin(\alpha - \theta' - \delta \left[1 + \sqrt{\frac{\sin(\phi+\delta)\sin(\phi-\theta'-\beta)}{\sin(\alpha-\delta-\theta')\sin(\alpha+\beta)}}\right]^2}$$

Where $\theta = \tan^{-1} K_h$, α = wall slope to horiz., ϕ = angled internal friction, β = backfill slope, and δ = wall friction angle.

For a vertical wall face and δ assumed to be $\phi/2$, becomes:

$$K_{AE} = \frac{\sin^2(\phi + 90 - \theta)}{\cos\theta \sin(90 - \theta - \phi/2 \left[1 + \sqrt{\frac{\sin 1.5\phi \sin(\phi - \theta - \beta)}{\sin(90 - \phi/2 - \theta)\sin(\beta + 90)}}\right]^2}$$

The values K_{AE} and K_A are displayed.

Total force (active and earthquake) - $P_{AE} = \frac{1}{2}(\gamma) K_{AE} H^2$ where γ = soil density

and H = retained height.
Since the total force consists of two components, static (P_A, as previously computed for static forces) with triangular distribution and the earthquake (P_{AE} - P_A) with an inverted semi-triangular distribution with an assumed point of application at 0.60 x height, the combined (static and EQ) point of application is determined by

$$\bar{x} = \frac{P_A(H/3) + (P_{AE} - P_A)0.6H}{P_{AE}},$$

which is displayed as "Ht. to static + EQ point of appl."

Total base shear for both static force and added seismic force are displayed.

The layout of this screen will change depending upon whether you previously chose a conventional cantilevered wall, a tapered stem wall (earth side battered), or a gravity wall. This screen is for a straight stem non-battered wall.

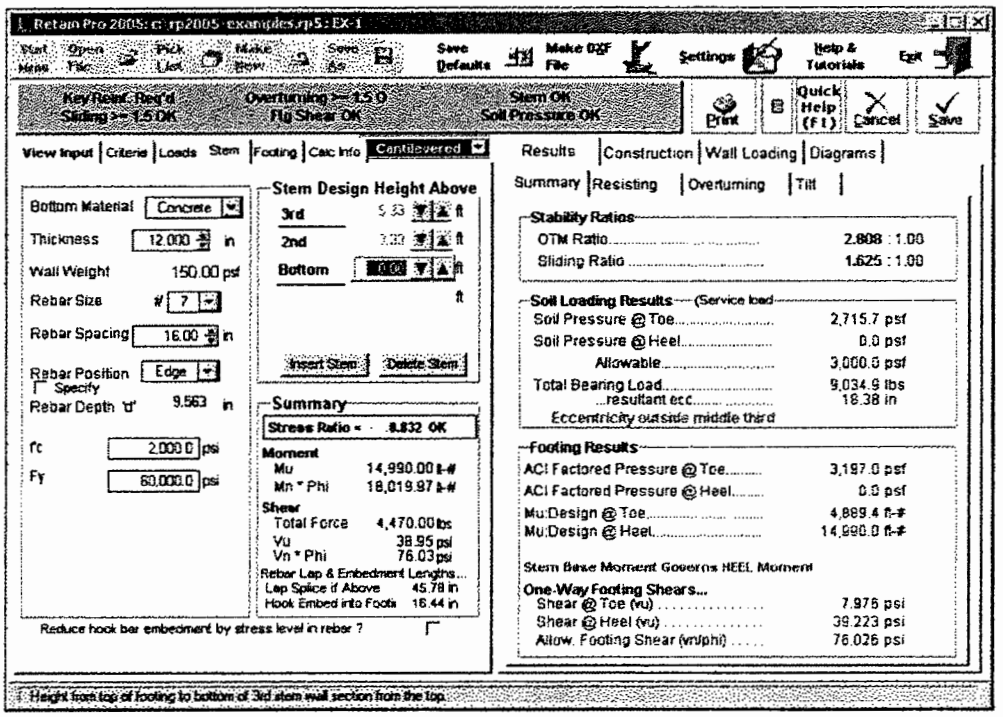

✍ Material

Use the drop down menu to select Masonry, Concrete, Fence, or None. Fence is only allowed on top of the wall, higher than the Retained Height, and is considered weightless. Use None to disable the stem section.

✍ Thickness

Use the drop down menu to input the wall thickness. If masonry is chosen, you will be given standard masonry thickness (e.g. 6", 8", 12"). If concrete is chosen, you can increment in one-inch steps. If Fence had been chosen, this entry is unavailable since the fence is assumed to be weightless.

Wall Weight

This displayed value is based upon the wall data entered earlier. The industry standard values used by the program may be modified on the CRITERIA > Materials Screen. See Appendix C for masonry wall weights.

Rebar Size

Make your selection from the pull-down menu for bar sizes #3 to #10. "Soft Metric" sizes will be displayed in parentheses alongside.

Rebar Position

Chose between Center and Edge. If Center is chosen, the rebar d distance will be 1/2 the actual wall thickness. If Edge is chosen it will be located at the heel side of the stem.

For masonry design, the program contains a table of the appropriate "d" values to use for various block sizes and center/edge locations, as shown in the table below. These may be modified from the CRITERIA > Material screen.

Rebar Position Depth for Masonry, Default Values.

Thickness	Rebar Depth (in)	
	Center	Edge
6"	2.75"	2.75"
8"	3.75"	5.25"
10"	4.75"	7.25"
12"	5.75"	9.0"
14"	6.75"	11.0"
16"	7.75"	13.0"

For concrete, the "edge" rebar depth is always stem thickness less 1.5" for #5 and smaller bars (or 2" for #6 or larger), less one-half the bar diameter. You can modify the rebar depths on the CRITERIA > Material screen.

Specify Position Box

Click this box to change the default "d" value.

f'_m

Enter f'_m for masonry stems to be designed. This value is not visible when a concrete wall has been specified. Spin button changes this value in 250 psi increments.

F_s

Enter the allowable steel stress, based on working stress design, which should be used for design of the masonry stem section. Spin button changes this value in increments, and is not visible when a concrete wall has been specified.

Short Term

This is used for masonry design only and UBC '97/CBC '01 is selected. It indicates the allowable overstress multiplier (1.33 for wind and seismic; higher for impact). Use it with caution if earth pressure contributes significantly to total moment and shear since the stress increase may then be unwarranted.

Special Inspection

This is applicable to masonry stems only using the UBC or CBC code. If checked, the full allowable f'_m used in flexure, shear, and axial stress will be used. If not checked, the allowable values will be reduced by one-half if Special Inspection provisions are not specified.

Solid Grout

This applies to masonry only, and if this box is checked the weight of the wall will be based upon industry standard solid-grout weight for either lightweight, medium weight, or normal weight. If this box is not checked, the program will calculate the weight based upon grouting of only cells containing reinforcing. This also affects equivalent solid thickness for stem shear calculations, and area for axial stress calculations (combined with moment for masonry stems).

Modular Ratio "n"

This is the multiplier used on f'_m to calculate the modulus of elasticity of masonry. The 1997 UBC specifies $E_m = 750 * f'_m$, which is the default value in the program. ACI 530-02, Table 5.5.1.3, lists higher values, which result in lower "n" values, hence the allowance for the user to modify it by using the CRITERIA > Material screen.

Equivalent Solid Thickness

If partially grouted (not solid grout) this value is generated from an internal database as shown below:

Masonry Equivalent Solid Thickness (inches)

	Grout Spacing					
Thickness (inches)	8"	16"	24"	32"	40"	48"
6	5.6	4.5	4.1	3.9	3.8	3.7
8	7.6	5.8	5.2	4.9	4.7	4.6
10	9.6	7.2	6.3	5.9	5.7	5.5
12	11.6	8.5	7.5	7.0	6.7	6.5
14	13.6	9.9	8.7	8.1	7.6	7.4
16	15.6	11.6	10.1	9.5	8.6	8.3

✍ Stem Design Heights

IMPORTANT! The term "Stem Design Height" used in this program is the height <u>above the top of the footing</u> (i.e. above the base of the stem). It is the height above the bottom of the stem where you want the program to compute moments and shears <u>above</u> that height.

You can divide the stem into up to five sections (increments of height). Each increment represents either a different material (concrete, masonry, or fence), thickness, or a change in reinforcing size or spacing.

For most walls, only two or three changes in stem sections are used, for example, at the top of the dowels projecting into the stem from the footing and perhaps further up the wall where a more economical section is desired.

✍ Bottom

<u>You must start your stem design here</u>, at the base (height above footing = 0.00), where the stem moment and shear is maximum. As you manipulate the bar sizes, spacing, and position (you first, of course, will have selected a wall material and trial thickness) until the Summary box shows you an acceptable stress ratio (the higher and closer to 1.0, the more efficient).

<u>To check the wall at a higher Design Height</u>, such as at least the LAP REQ'D IF ABOVE distance, where reinforcing or thickness can be reduced, click the **Insert Stem** button and enter the next higher section. Advance the spin button to the desired height above the top of the footing or enter it by typing. This will move (and dim) the Bottom Section and you can now design this "2nd" section.

Continue this way, clicking Insert Stem after each stem section design is completed, up to a maximum of five heights. A new Design Height should only be entered when you want to change the material, thickness, or reinforcing, and should never be less than about two foot intervals.

Summary -- Overall Stress Ratio

For masonry, this is the computed ratio of $f_a/F_a + M_{actual}/M_{allowable}$. For concrete it is $M_{actual}/M_{allowable}$.

The weight of the stem will be included only if there is added axial load. For masonry stems, F_a is calculated by considering the wall as unsupported with "K" = 2.0. Since even a very small axial load will activate the unsupported height/slenderness calculation for masonry stems, we suggest you do not enter an axial load unless it is significant (e.g. greater than, say, 3000 plf.).

Actual Moment

This is the maximum moment due to the lateral pressures and applied loads above the "Design Height" location entered. Note that when concrete is used, all soil pressures and loads are factored per default Load Factors for evaluation of moments and shears.

Allowable Moment

This is the allowable moment capacity, using working stress for masonry and ultimate strength for concrete. For masonry, both steel and masonry stresses are checked (and half stresses used for no Special Inspection). For concrete strength design, and steel percentage is limited to 0.75*rho balanced.

Total Force

This is the total lateral force from loads applied above the "Check Design at Height" location entered. Note that when concrete is used the forces acting will be factored. (Forces applied to compute overturning, sliding, and soil pressure are not factored.).

Actual Shear

For masonry, the effective thickness based on the actual "d" distance for the moment applied is used, considering partial or full grouting, to determine the unit shear produced by the total lateral force of the stem cross section (equivalent solid thickness is not used). Half stresses are used for no special inspection. Shears are calculated at the "Design height" location entered, not at distance "d" above design height. Concrete stems use a distance "d" x 12" for the shear area, and masonry stems use "jd" x 12" (with proper calculations for partial grouted cells) as the shear area.

Allowable Shear

For masonry, this equals (f'_m * short term increase)* ½ with a maximum of 50 psi.

For concrete, this equals 0.85*2* $f'_c{}^{½}$.

Lap Required If Above / Below

This displays the required lap length if a splice occurs above (or below) the Design Height. They are not cumulative, either make the lap above or below the Design Height for the minimum distance displayed.

The laps required above and below will be different if you are changing from concrete to masonry, or bar size.

For concrete stems, a Class B lap splice is assumed (see ACI 318-02, 12.15), therefore the lap length is the bar development length x 1.3. No reduction for stress level is permitted for lap splice lengths. Concrete is assumed to be normal weight, and bars not epoxy coated.

Concrete development lengths are computed per ACI 12.2.3, equation (12-1).

For masonry stems, the development length is set at 48 bar diameter, for F_s = 24,000 psi and 40 diameters for F_s = 20,000 psi. No reduction is made for stress level.

Bond stress is not calculated for concrete, since it is incorporated into the development length formula. The same is considered tru for masonry where bars are embedded in code specified 2000 psi grout.

Assumes bars are embedded in 2000 psi grout (specified by code) and therefore bond is not a significant concern.

Bar Embedment into Footing

For the bottom Design Height only (Ht. = 0.00), this displays the required hook bar embedment into the footing. It assumes a bar with a 90° bend and at lest a 12 diameter extension. This embedment must be at least 6" or 8 bar diameters.

The minimum footing thickness required is based upon this embedment depth plus the clearance you have specified below the bar (usually 3 inches). If this totals less than the footing thickness you have chosen, a warning message will be displayed.

Note that if the bar extends straight down into a key, it must go the development length, and is not reduced by level of stress. For this condition, refer to the table in Appendix B, and multiply by the displayed Stress Level to get the required embedment.

The program does not reduce embedment length by stress level unless the Reduce Hook Bar Embedment for Stress Level box is checked. This is a code arguable issue.

✍ Wall Type

If tapered (battered) stem is selected, entry and data descriptions are described below. Taper can only apply to the inside face (the face against the soil).

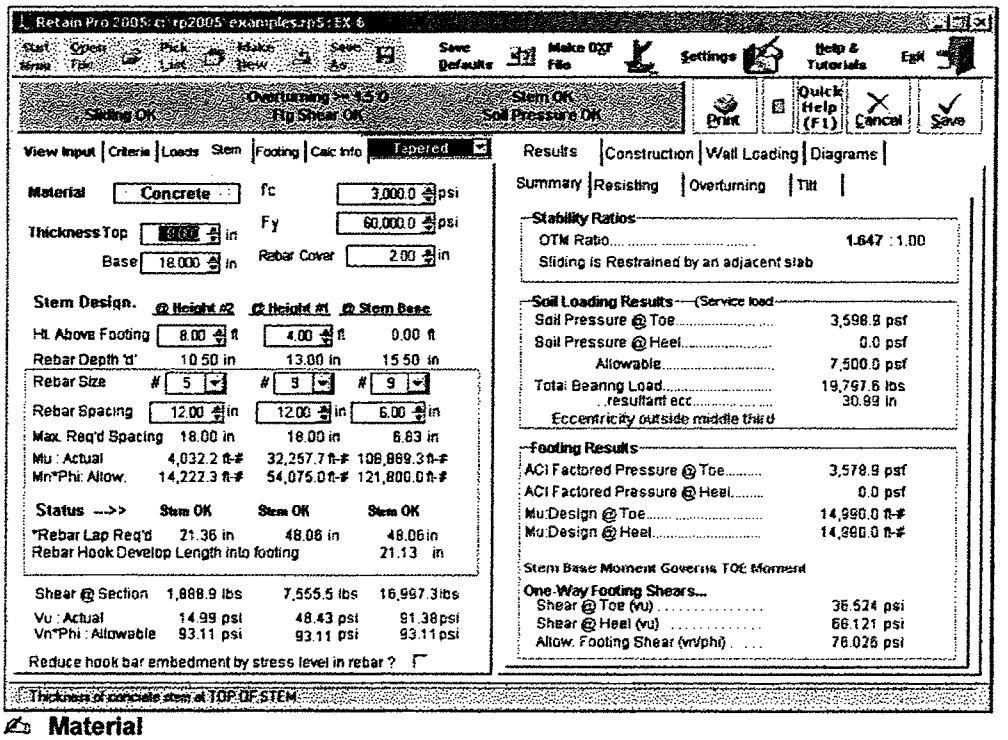

✍ Material

The default will be Concrete, since masonry cannot be tapered.

✍ Thickness: Top and Base

Enter the thickness at the bottom of the stem and at the top.

✍ f'c and Fy

Enter concrete strength and rebar yield stress.

✍ Rebar Cover

Select the clearance you want. Against earth or exposed to weather and where formed, #5 and smaller bars are 1½" and 2" for #6 and larger (per ACI).

Stem Design

You can select two heights above the base to check moments and shears. These are identified as "@ Height #2" and "@ Height #1." The latter is the lower, and the default height at the base is 0.00 ft.

✍ Ht. Above Footing

Select the two heights above the footing where rebar will be reduced for economy. Height #2 is highest and height at stem base will be fixed at 0.00. The #1 height should be at least the lap distance required above the stem top and base of the stem.

Rebar Depth "d".

This will be computed based upon the heights you have chosen and the amount of wall taper. One-half inch will be automatically added to rebar clearance to determine "d".

✍ Rebar Size

Use the drop down menu to select #3 through #10 bar.

✍ Rebar Spacing

Use the above data as a guide, but you will not be able to enter a spacing greater than 18 inches, which is the ACI permitted maximum.

Max. Allow. Spacing

This is the maximum permitted spacing, which per ACI is 18 inches.

Actual Moment (M_u)

These are factored (by 1.7) moments at the heights you have selected.

Compare this value with Allowable Moment, indicated below, to verify adequacy of your design at the selected height location.

Allowable Moment (M_n x ϕ)

This will be based upon the bar sizes and spacings you select.

Status

This indicates whether your stem design is OK at the selected height—or at the base—or displays M_u > Phi * M_n or A_s < min or A_s > max.

Rebar Lap Splice Above / Below

This is the lap distance required above or below the Design Height. It is the development length multiplied by 1.3 (assuming a Class B splice) and without adjustment for stress level.

Rebar Embed Length into Footing

This is the same as for the Cantilevered (non-tapered) stem, and assumes the bar is hooked into the footing with a 90° bend and minimum 12 d_b bar extension.

Shear at Section

This is the total factored shear at the indicated height.

Actual Shear

Unfactored shear stress at designated height computed by area = 12 * "d".

Allowable Shear

Based upon $0.85 * 2 * \left(f_c'\right)^{1/2}$ for concrete.

Gravity walls may have one or both sides tapered and are assumed to be proportioned such that no reinforcing is required since every section is primarily in compression. Any solid homogeneous material may be used. Reinforcing can be added if there is any tension in the cross section, but the program does not compute this requirement.

Although the program only permits straight tapered sides (no crooks), changes in batter on either face, or even curved surfaces, can be modeled with reasonably close results.

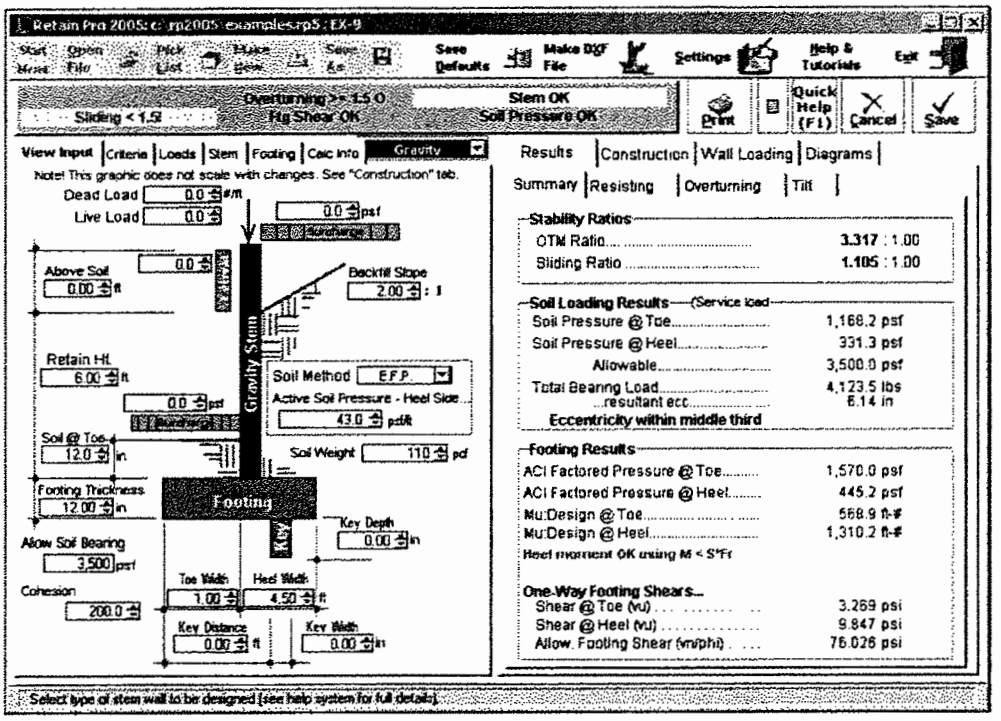

Material

This entry displays "Gravity" and is not editable since any homogeneous material with compressive capacity can be used.

✍ **Wall Weight**

Enter the weight of the wall material in pcf. Generally this will be the weight of rubble, or approximately 145 pcf.

✍ **Front Batter Distance**

Enter the offset of the top of the wall from the front face at the base.

✍ **Thickness at Top**

Enter the thickness of the top of the wall.

✍ **Back Batter Distance**

Enter the offset of the top of the wall from the back face of the base.

✍ **Applied Load Factor**

Enter the load factor to be applied, 1.6 for concrete, 1.0 for masonry ASD, or other.

✍ **F'c Max. Compression Allowed**

Enter your criteria. Usually varies from 100 psi to over 700 psi.

✍ **F_t Max. Tension Allowed**

Enter your criteria. Usually varies from about 15 psi to 40 psi. Generally gravity walls are designed such that there is no tension – the full cross section is in compression.

✍ **Height Above Footing**

You can check stresses in the cross section at two heights above the footing. The Height Above Footing at the base will by default be zero.

Wall Thickness @ Height

This displays the wall thickness at the heights you have selected for analysis.

Section Modulus

This displays the computed section modulus at the heights selected for analysis.

Moment @ Height

This displays the moment at the designated height above the base.

Vertical Load @ Height

Summation of the vertical loads above designated height.

Maximum Tension / Compression

Interaction formulas displays compression and tension stresses.

Status

Indicates OK or NG for resulting stresses compared with designated maximums allowable.

Shear @ Section

Total shear at designated height.

Actual Unit Shear

Calculated unit shear at designated height. Compare this with the allowable shear for the material you have selected.

NOTE: Entries for Criteria similar to cantilevered walls. Recommend "wall height above retained soil," not exceed about ¼ support height.

Wall Type

If Restrained Stem is selected, you may have a lateral support (such as an abutting roof, slab-on-grade over backfill, or tiebacks). The lateral support should be near the top of the wall, although some extension of the wall above the support is permitted. You have the option of fixing the base (as for a cantilevered wall) or assuming it pinned. Intermediate degrees of fixity are not permitted. The program will compute moments, shears, and stresses at three locations: base (negative moment if fixed; zero moment if pinned), maximum positive moment between base and support, and at the point of support.

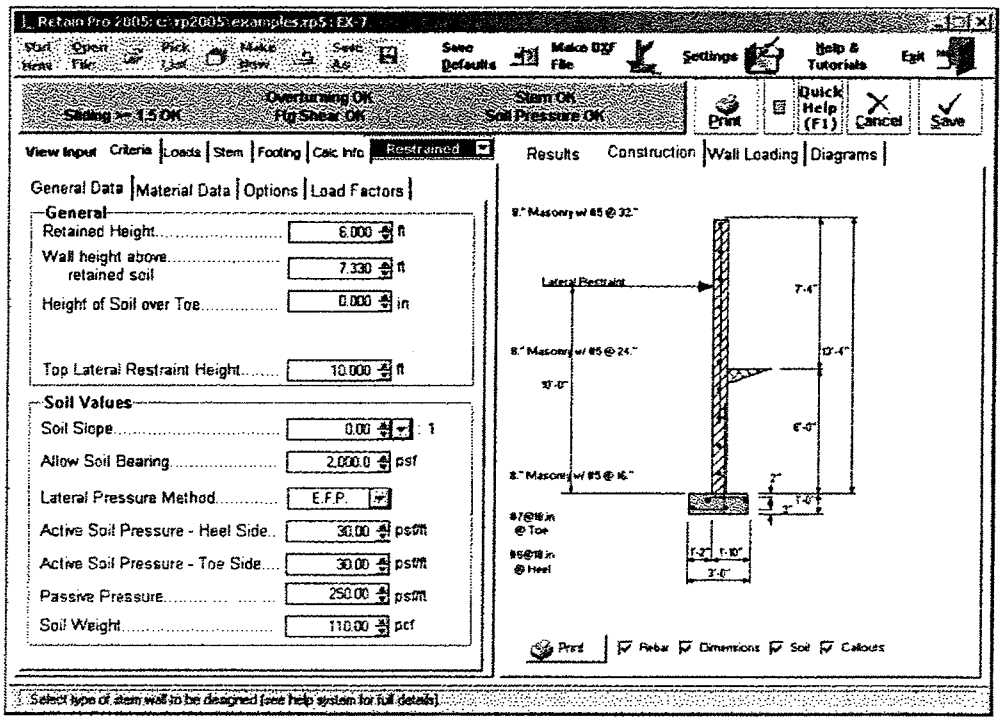

✍ Material

Select Masonry or Concrete. Only one material can be used, and must be of constant thickness.

✍ Support Height

Use the spin buttons (or type the value) for height from base to level of support. To check the overall wall height that you had input (retained height plus height above soil) just click the CRITERIA tab.

✍ Thickness

The program only permits a constant thickness throughout the height of the wall. Use the spin button (or type) the choice for thickness. If Masonry was chosen, the drop down menu will give you modular choices.

✍ Fix Stem @ Base

Clicking this box will check footing and stem for 100% fixity at base. If unchecked, pin condition will be assumed.

✍ f'_m or f'_c

Enter choice for masonry or concrete.

✍ F_s or F_y

Enter choice for masonry or concrete.

✍ Rebar Cover

This appears if a concrete stem is chosen and lets you enter desired cover on toe and earth side.

✍ Inspection

This is applicable to masonry stems only using UBC or CBC code. If checked, the full allowable f'_m used in flexure, shear, and axial stress will be used. If not checked, the allowable values will be reduced by one-half. The UBC and CBC codes require this reduction if Special Inspection is not specified.

✍ Solid Grout

This applies to masonry only, and if this box is checked the weight of the wall will be based upon industry standard solid-grout weight for either lightweight, medium weight, or normal weight. If this box is not checked, the program will calculate the weight based upon grouting of only cells containing reinforcing. This also affects equivalent solid thickness for stem shear calculations

✍ Short Term

This is used for masonry design only, and indicates the allowable overstress multiplier (1.33 for wind and seismic).It should only be used when wind or seismic induced stresses comprise most of the total stress (i.e. earth pressure is insignificant). For a concrete wall this does not apply since strength design is used, and this entry should be 1.0.

Stem Design

This allows you to design or check wall moment and shear at three locations: @ Top Support, @ M_{max} Between Ends, and @ Stem Base. If base is pinned, the entries under @ Stem Base will be zero or dimmed.

Ht. Above Footing

This displays, from left to right, the distance up to lateral support, height to point of maximum positive moment, and at the base of the stem.

Rebar Depth "d"

From the thickness and center/edge condition, the program determines the d" to be used for design (using internal tables and default modifications). See Rebar Position, above. For concrete, the program automatically adds to cover chosen one-inch allowance for one-half bar diameter, for determining "d" to be used.

✍ Rebar Size

Select from the drop-down menu.

✍ Rebar Location

Click the button for Center or Edge.

✍ Rebar Spacing

Enter your trial choice, or for masonry, select from the drop-down menu.

Actual Moment

This will show moments at the indicated locations with (+) and (-) as applicable. For concrete the moments will be factored by 1.7.

Allowable Moment

This will be calculated based upon the data you have entered. For concrete, it will be based upon strength design (factored by 1.7).

Status

This indicates whether your stem design is OK at the selected height—or at the base—or displays $M_u > \text{Phi} * M_n$ or $A_s < \text{min}$ or $A_s > \text{max}$.

Rebar Lap Req'd Above / Below

For masonry, the lap required is 48 bar diameters for F_s = 24,000 psi and 40 diameters for F_s = 20,000 psi.

For concrete, a Class B splice is assumed, which multiplies the development length by 1.3 (See ACI 12.15.2), and excludes reduction for stress level.

Note: The program does not compute or display bar cut-off points, which must be done manually, or extend positive reinforcing so it is acceptable.

Shear at Section

This is the total shear at the indicated height (factored for concrete).

Actual Shear

Unit shear stress at designated height computed by area = 12 * "d".

Allowable Shear

Based upon $0.85 * 2 * (f'_c)^{1/2}$ for concrete and $(f'_m)^{1/2}$ for masonry, reduced one-half for no special inspection per UBC/CBC, and not to exceed 50 psi.

See Methodology, for further discussion of restrained walls.

This is the screen where you design the footing, by manipulating the heel and toe widths so the actual soil pressure is less than allowable, or you can use the Automatic Footing Design button (described below) to size the footing. This screen also gives you choices for toe and heel reinforcing, or indicates if it is theoretically not required. It also suggests key reinforcing, if applicable.

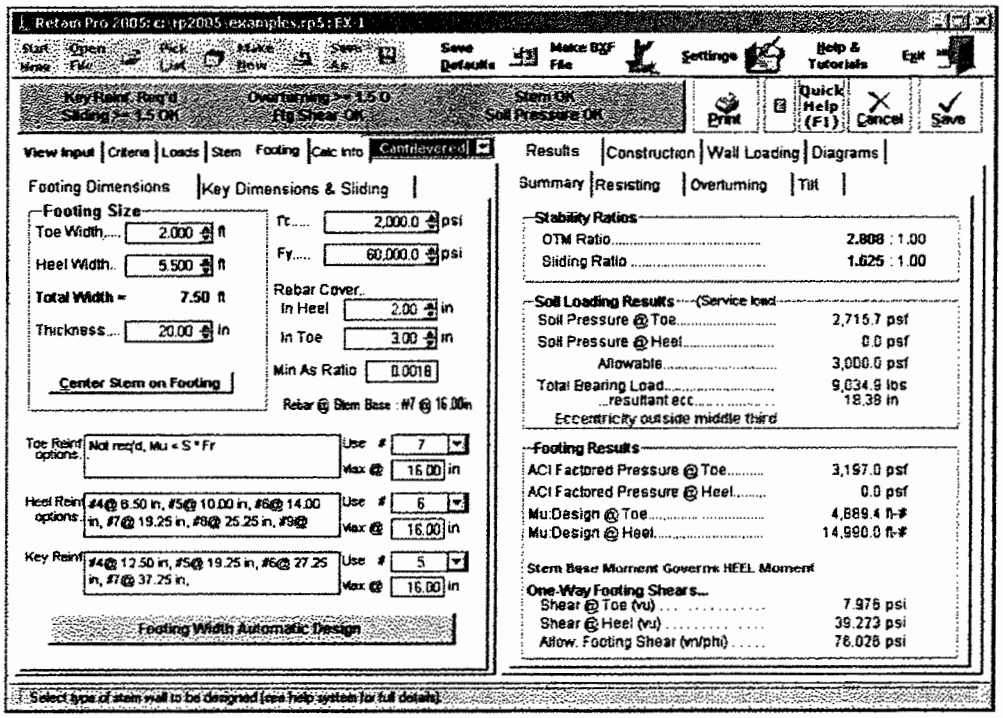

✍ Toe Width

This is the width of the Toe of the footing, and is measured from the front edge of the footing to the front face of the stem. Can be set to 0.00 for a property line condition. All overturning and resisting moments are taken about the bottom-front edge of the toe.

Heel Width

Distance from front face of stem to back of heel projection. If a dimension is entered that is less than the stem width at the base, the program will automatically reset the heel dimension to at least the stem width. For a property line at the rear face of the stem, this dimension would be the stem width.

Total Footing Width

The calculated width of the footing, Toe Width + Heel Width.

Footing Thickness

Total footing thickness, NOT including the key depth (if used). For bending and shear design of the footing, the rebar depth "d" is taken as Footing Depth - Rebar Cover - ½" (to account for the rebar radius). If footing thickness is inadequate for shear capacity a red warning indicator will appear.

The footing thickness must be greater than the rebar embedment length required for the bottom stem reinforcing + rebar cover. If you enter a dimension less than required for stem bar embedment, a red message will appear at the top of the screen. The program adds the calculated hooked bar embedment from the STEM screen and adds it to the rebar cover you have chosen for the bottom of the footing (usually 3"). This will trigger the red warning. If inadequate thickness, increase the thickness, or change the stem dowels, until this message disappears.

Center Stem on Footing

Clicking this bar will adjust the toe and heel widths you have entered so stem is centered on the footing but overall width remains the same.

f'_c

Enter concrete compressive stress for footing.

F_y

Allowable rebar yields stress to be used for design of footing bending reinforcement.

✍ Rebar Cover in Heel/Toe

Distance from the face of concrete to edge of rebar. The program will add 1/2" to this value and subtract the result from the footing thickness to determine the bending "d" distance.

✍ Minimum A_s Rebar Ratio

Enter the absolute minimum steel percentage to be used to calculate rebar spacing requirements (commonly 0.0018 Ag for F_y=60,000 psi, but code applicability for footings is arguable). If the % steel required by stress analysis is less that 200/F_y, the minimum of (200/F_y -or- 1.333 * bending percentage required) is calculated and compared with the Minimum A_s% entered here, and the greater of the two used to calculate rebar spacing requirements.

Rebar at Stem Base

This is a reminder of the size and spacing of the bottom stem reinforcing, to make it easier for you to select toe reinforcing to match (toe reinforcing is usually the bottom stem dowel bars bent toward the toe).

Toe Reinforcing Options

This list gives you choices for reinforcing sizes and spacing for the bottom toe bars. Typically the toe bars are extensions of the stem dowels, which are bent out toward the toe. Therefore, you will probably want only to verify that the stem dowel bar size and spacing do not exceed the selections offered.

NOTE: If "No reinf' req'd" message appears, it means the flexural capacity of the footing (modulus of rupture times the section modulus, with 2" deducted from the thickness for crack allowance per code) is adequate to resist the applied moment. However, the designer in some cases may consider it prudent to add reinforcing regardless of the theoretical flexural capacity.

Heel Reinforcing Options

This list gives you choices for acceptable sizes and spacing of top heel bars. It is desirable to select a spacing that is modular with the stem dowel bars for ease of construction. Note: The program does not calculate the heel bar development length inward from the back face of the stem (where the moment is maximum). You can refer to Appendix B for development lengths in concrete, which can be adjusted for the stress level in the heel bars. When detailing footing reinforcing it is important to consider and specify development lengths for both toe and heel bars.

NOTE: If "No reinf' req'd" message appears, it means the flexural capacity of the footing (modulus of rupture times the section modulus, with 2" deducted from the thickness for crack allowance per code) is adequate to resist the applied moment. However, the designer in some cases may consider it prudent to add reinforcing regardless of the theoretical flexural capacity.

Rebar Selections

Use these three entries to pick your toe, heel, and if applicable, key reinforcing. The "Max @" message tells you the maximum spacing allowed for the bar selected. Since the dowels into the stem are usually bent toward the toe, a reminder is displayed for the bar size and spacing used for the stem dowels.

Footing Width Automatic Design

Clicking this button will cause the program to iterate footing widths until the soil pressure, overturning stability, and sliding stability ratios are acceptable. You can select either a fixed toe or heel distance, or balance the toe and heel dimensions. You can also select whether the resultant must be within the middle third of the footing. After clicking "Design," the widths required will be displayed.

Automatic footing design is not available for Restrained Walls.

This screen tells you whether passive soil resistance plus friction resistance is adequate to resist sliding with at least a 1.5 safety factor. If inadequate, you can design a key. If a key is used, the previous footing screen will check whether reinforcing is required by first checking the plain concrete flexural capacity (for computing section modulus, 2" is deducted from the key width per Code). If the key depth to width ratio is less than about 2:1, it's usually adequate.

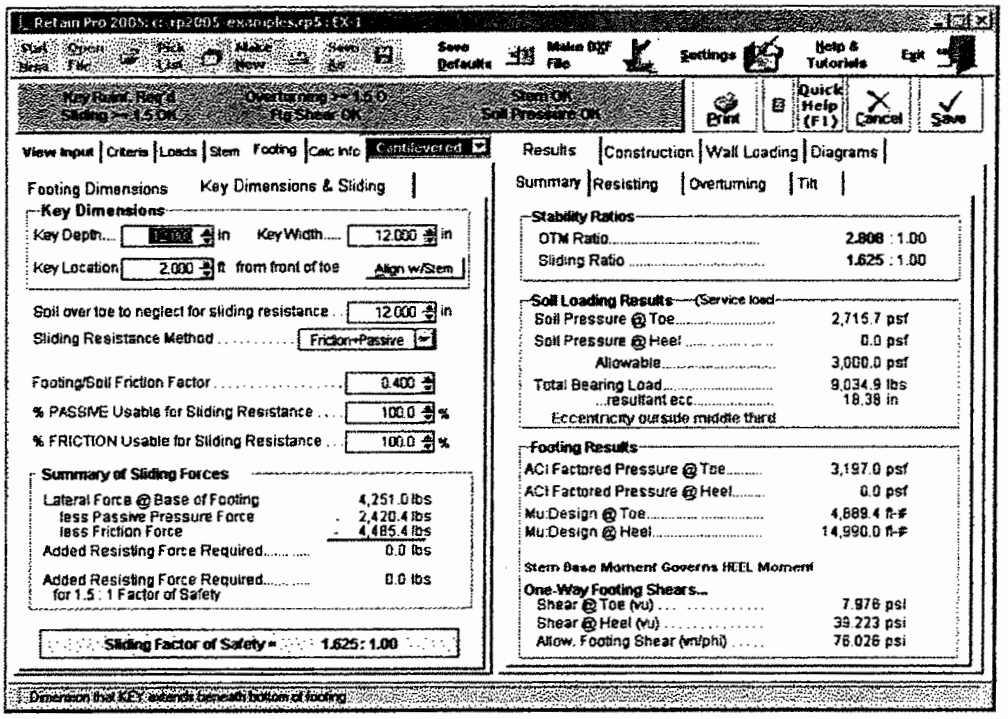

✍ Key Depth

Depth of the key below the bottom of footing. The bottom of the key is used as the lower horizontal plane for determining the size of the passive pressure block from the soil in front of the footing. Adjust this depth so the sliding safety factor is acceptable, but not less than 1.5. A depth greater than three feet or one-half the footing width is not recommended.

✍ Key Width

Width of the key, measured along the same direction as the footing width. This is usually 12"-14", but generally not less than one-half the key depth so flexural stress in the key is usually adequate.

✍ Key Location

Enter the distance from the front edge of the toe to the beginning of the key. Do not enter a distance greater than the footing width minus key width.

✍ Align with Stem

Click this button to set front edge of key aligned with front of stem. If the key is then made the same width as the stem, the stem bars could extend down into the key to achieve development.

✍ Soil Over Toe to Neglect for Sliding Resistance

Since the soil over the toe of the footing is usually loose and uncompacted, it may have little or no passive resistance. This entry gives you the option of neglecting any or all of the Height of Soil Over Toe that you had entered in the CRITERIA screen. You can neglect the soil over toe plus the footing thickness, if desired.

✍ Footing/Soil Friction Factor

Enter this friction factor here, which is generally provided by the geotechnical engineer. It usually varies from 0.25 to 0.45.

✍ % Passive Usable for Sliding Resistance

This may be a stated restriction in the geotechnical report. Enter a value from zero to 100%.

✍ % Friction Usable for Sliding Resistance

This may be a stated restriction in the geotechnical report. Enter a value from zero to 100%.

Lateral Pressure @ Base of Footing

This is the total lateral force against the stem and footing which causes the wall to slide and which must be resisted. It is the total active pressure on the heel side less the active pressure on the toe side. The latter will be excluded if you choose to delete it on the OPTIONS screen.

Less Passive Pressure Force

This uses the allowable passive pressure in pcf and the available depth (soil above toe less height to neglect plus footing thickness) to compute the total passive resistance, again multiplied by the percent usable you selected. Weight due to toe surcharge, if applicable, will also be added. If a key is used, the available passive pressure depth will be to the bottom of the key.

Less Friction Force

This is the total vertical reaction multiplied by the friction factor, again multiplied by the percent usable you selected

Added Resisting Force Required

If this is 0.0 lbs., the forces balance, but there may be no safety factor. Watch the Sliding Factor of Safety for an adequate value (usually 1.5). Add a key as required.

Added Resisting Force Required for 1.5:1 Safety Factor

This is the additional force required to be resisted by a key to achieve a 1.5 safety factor. If zero, no key is required.

Key Reinforcing

If flexural tension is insufficient to resist bending in key, a message will appear indicating reinforcing required. You can vary the width of the key until the message disappears. Or you can manually calculate reinforcing required. Also see *Methodology.*

Sliding Factor of Safety

This gives you the ratio of passive and friction resistance to the total lateral force. This should be at least 1.5.

NOTE: If lateral restraint is provided by an abutting floor slab (by checking the box on the CRITERIA > OPTIONS screen), the sliding factor of safety displays will be deleted, but the "Lateral Force @ Base of Footing" will be displayed for checking restraint adequacy of the slab.

For Restrained Walls the STABILITY screen will appear differently, summarizing the conditions you have set regarding base fixity and base lateral restraint.

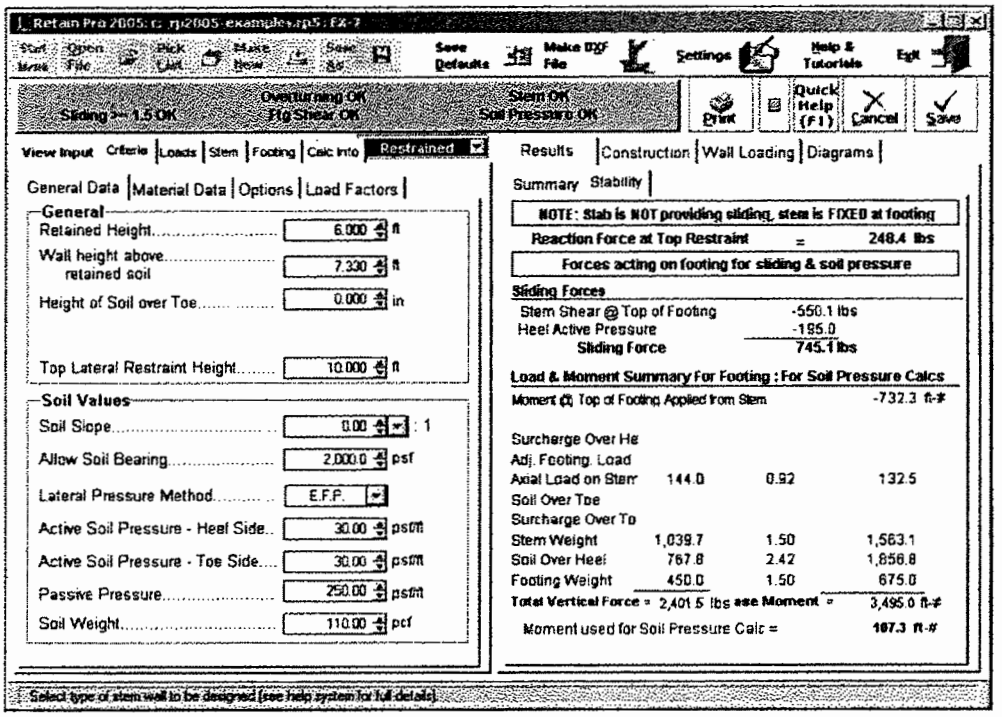

A banner will display whether a slab is present to resist base sliding (box checked on CRITERIA > OPTIONS screen) and whether fixed or pinned at base, as previously selected on the STEM screen.

The reaction at the top restraint will be displayed.

The Sliding forces will be displayed, and indicate counteracting active pressure on toe side, if this option was selected on the Options screen.

For analyzing the stem, if it is assumed "pinned" at the bottom (checkbox choice is made on the Stem screen), and a slab is not present to resist sliding, then the theoretical overturning of the footing due to the reaction at the base of the stem, is the reaction at the bottom of the stem times the depth of the footing. In actual practice the footing will be constructed integrally with the stem (not a true "pin") therefore the displayed "moment at top of footing applied from stem" (shown on Stability tab) will be compared to the moment capacity at the stem base (shown on Stem screen) and an overstress shown if the stem base moment capacity is inadequate.

If slab restraint is provided, the moment applied to the footing is the total vertical load times its eccentricity from the center of the footing. This moment is displayed (Stability screen) and used to compute soil pressure. The moment capacity at the stem-footing interface (shown on Stem screen) must exceed the moment applied to the footing

This screen summarizes the footing/soil bearing results obtained from previous screens, including a message whether the resultant is within or outside the middle third of the footing. This is not an input screen. It's strictly for your review.

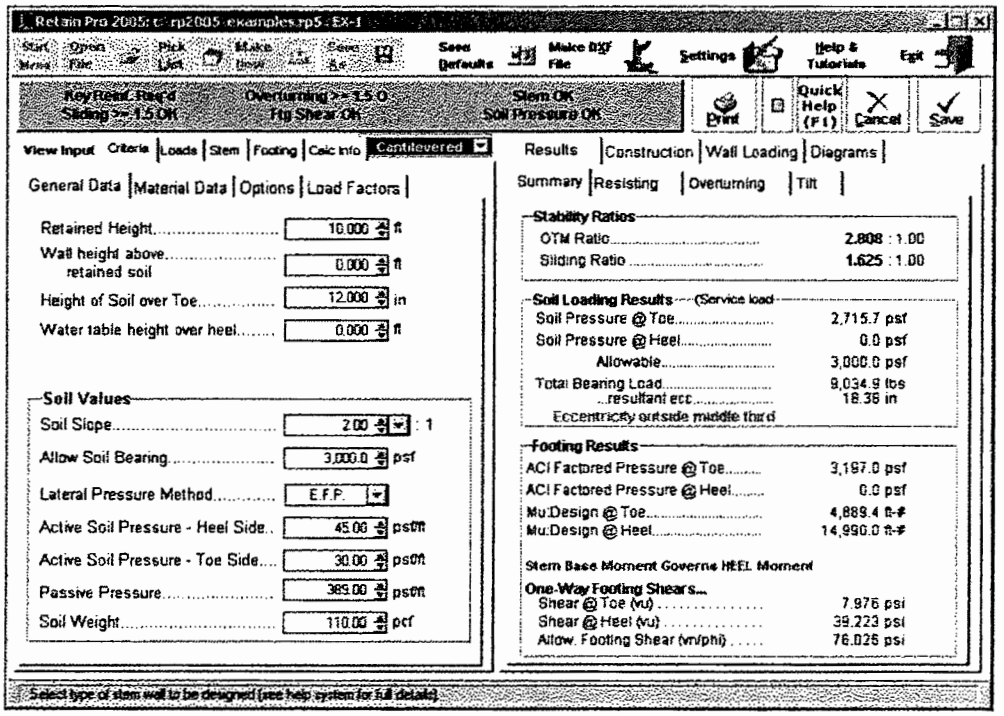

Stability Ratios

These are displayed for both overturning and sliding.

Soil Pressure @ Toe and Heel

This is the resulting unfactored soil pressure for both the toe and heel. If the eccentricity is outside the middle third, the heel pressure will show 0.00. (Note: when the resultant is outside the middle-third, the program calculates the toe pressure assuming no "tension" at heel).

Allowable Soil Pressure

This is for your reference as input on the Criteria input Screen

Total Bearing Load

This is the sum of all vertical forces.

Resultant Eccentricity

Distance from center of footing to resultant soil pressure.

Eccentricity Within/Outside Middle Third

The resultant is outside the middle third of the footing width if the eccentricity is greater than one-sixth the footing width. (If outside the middle third, the program computes the toe soil pressure assuming no "tension" at heel.)

ACI Factored Soil Pressure @ Toe and Heel

ACI or AASHTO load factors are applied to all dead and live loads to determine total vertical load for soil pressure used in calculating footing moments and shears. This load is then applied at the same eccentricity calculated for service load soil pressures to yield the actual factored soil pressures for footing design using ultimate strength design principles. Note that since only factored vertical loads are applied at the non-factored resultant eccentricity, a true 1.6 load factor applied to lateral earth pressure is not used for footing design. If resultant vertical load eccentricity were to be calculated using factored loads, the distance would not truly represent a correct state of stress in the soil. ACI load factors are intended to give conservative results for stress. Calculation of a factored load eccentricity would give soil pressure diagrams that would not always represent the actual soil pressure distribution under the footing, and yield unreasonable results. Factored lateral earth pressure, however, is always used for concrete stem design.

M_u Design @ Toe/Heel

These are the factored (by 1.2) moments at face of stem for toe and heel moments. Since neither can be greater than the stem base moment (factored if concrete stem), the latter may govern. These moments will be reduced if you choose to neglect the upward soil pressure on the Criteria > Options tab.

A message will indicate which controls.

Shear @ Toe and Heel

The actual shear is calculated from the one-way action in the footing at a distance "d" (footing thickness - rebar cover) from the toe side of the bottom stem section, and at the face of the stem on the heel side. If "d" is greater than the projecting toe or heel length, then the one-way shear is zero.

Allowable Footing Shear

The allowable unit shear equals ($0.85 * 2 * f_c^{\prime\,1/2}$).

Stability ratios are re-displayed.

This screen presents in tabular form each component contributing to resisting moment, giving weights and lever arms from the front edge of the toe to the centroid of the weight.

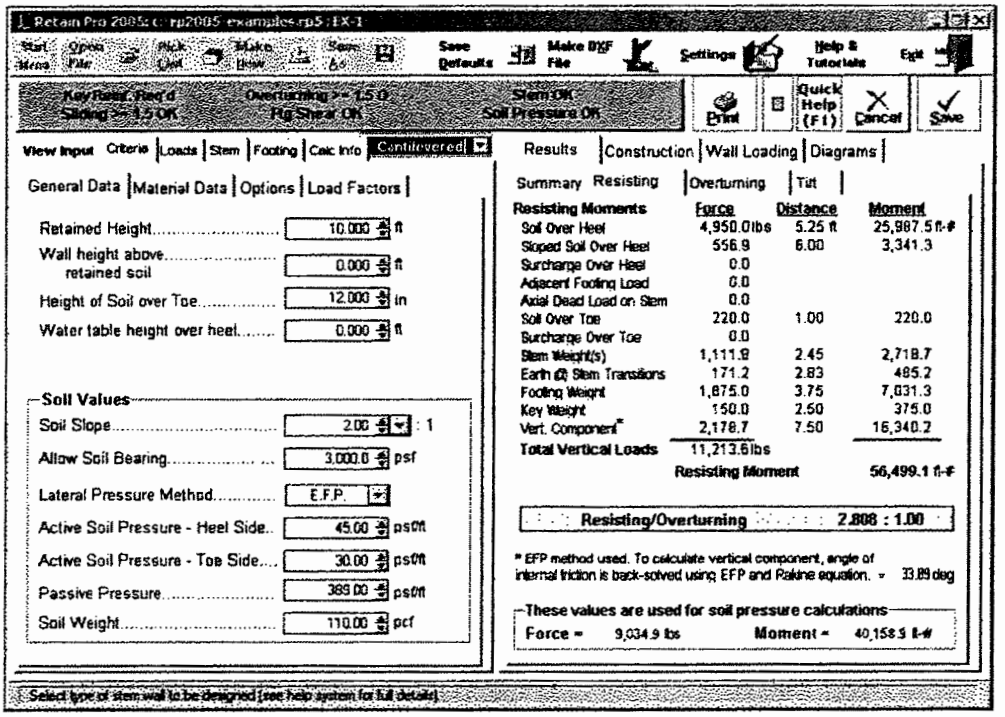

Resisting/Overturning ratio is displayed.

For calculating the vertical component, if checked on the OPTIONS screen, and if the EFP method was chosen, the program will back-solve using the Rankine formula to obtain an equivalent internal friction angle.

The force and moment displayed at the bottom accounts for deduction of effect of vertical component, if box on CRITERIA > OPTIONS box has been checked.

This screen presents in tabular form each component acting horizontally to overturn the wall/footing system. The centroid of each force is multiplied by its distance up from the bottom of the footing. The Heel Active Pressure includes the effect of surcharges and water table, if applicable, and its Distance is to the centroid of the total lateral force.

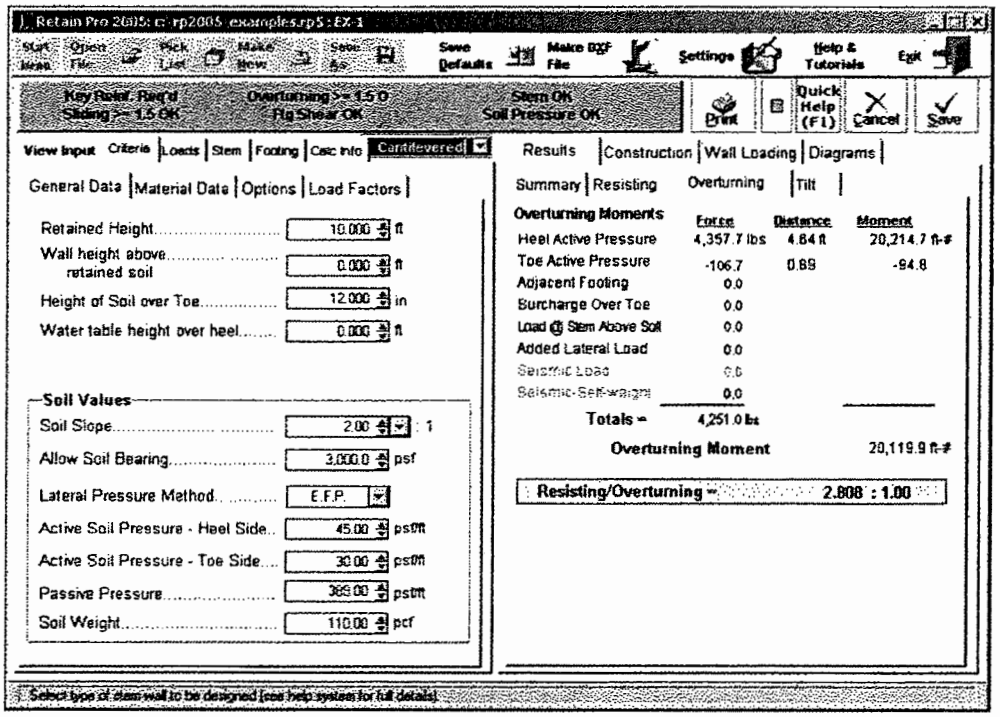

The total overturning moment is displayed, and the Resisting/Overturning ratio. The overturning moment is reduced by the toe side active pressure, if this option is selected on the Options screen.

This computes the rotation of the wall due to compression of the soil under the toe.

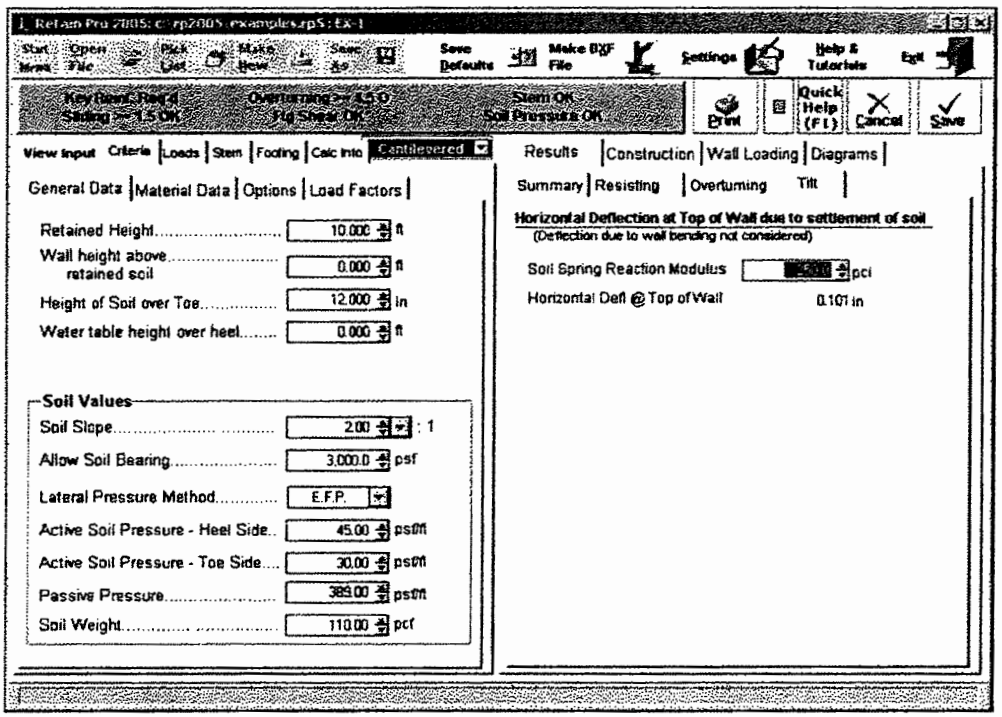

You must enter the modulus of subgrade reaction (determined by the geotechnical engineer). The program divides the soil bearing stress in psi by the soil modulus (psi/inch) to obtain Δ. Then, assuming the wall and footing rigid, the out-of-plane tilt at top = $\Delta H/W$, where H = overall height of wall and footing, and W is width of footing.

Note: This is approximate due to variation in soil pressure under the footing, and does not include deflection of the stem due to lateral earth pressures. (The latter is usually less than the "tilt" deflection, and if desired, must be done by hand calculation, requiring investigation of cracked and uncracked moments of inertia.) To mobilize the soil wedge, deflection at top is often considered 0.005 x H_{total}

CONSTRUCTION Tab

This graphics screen displays a construction drawing showing the pertinent construction data for the wall as you have entered it. It can be printed, copied to the Windows clipboard, or a DXF file can be generated for importing to your CAD software. This graphic is not editable and is intended as a check of your input. We do not recommend printing and editing it (by hand) for an actual construction drawing. Instead, use the DXF to CAD feature.

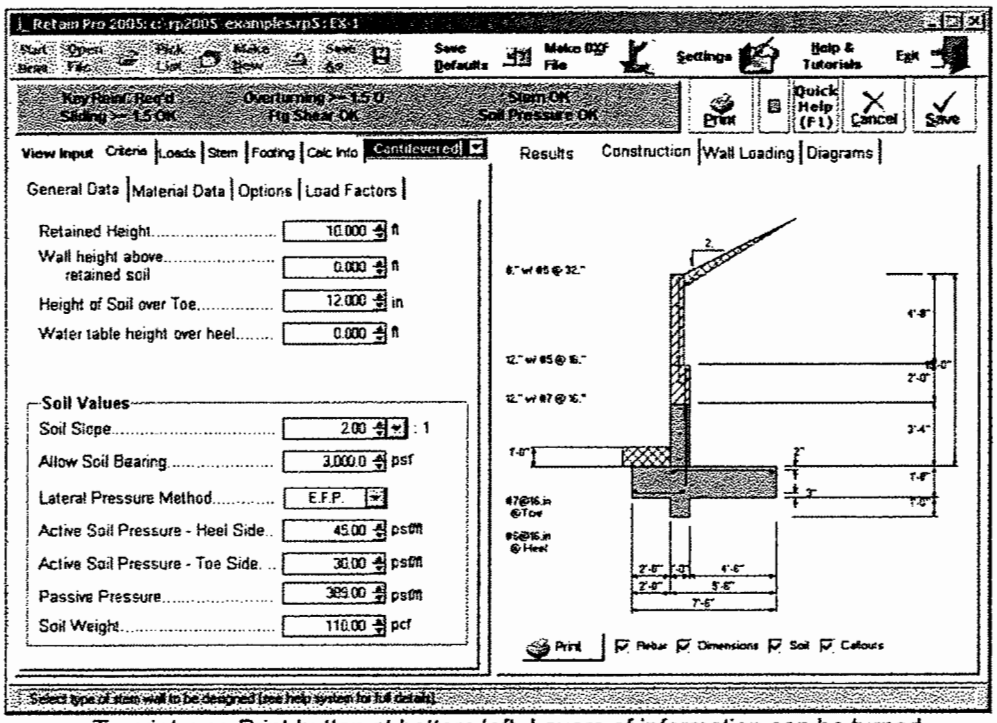

To print, use Print button at bottom left. Layers of information can be turned off/on by buttons at bottom.

THIS DRAWING WILL NOT DEPICT THE WALL UNTIL YOU HAVE ENTERED SUFFICIENT DATA. ONLY A DEFAULT GRAPHIC WILL APPEAR INITIALLY.

This graphics diagram shows loads you have entered, active pressure resultant, passive pressure resultant, and maximum soil pressure.

Loads are color-coded and may be turned off/on by clicking boxes at bottom.

To print, use button at lower left (not shown on above illustration.

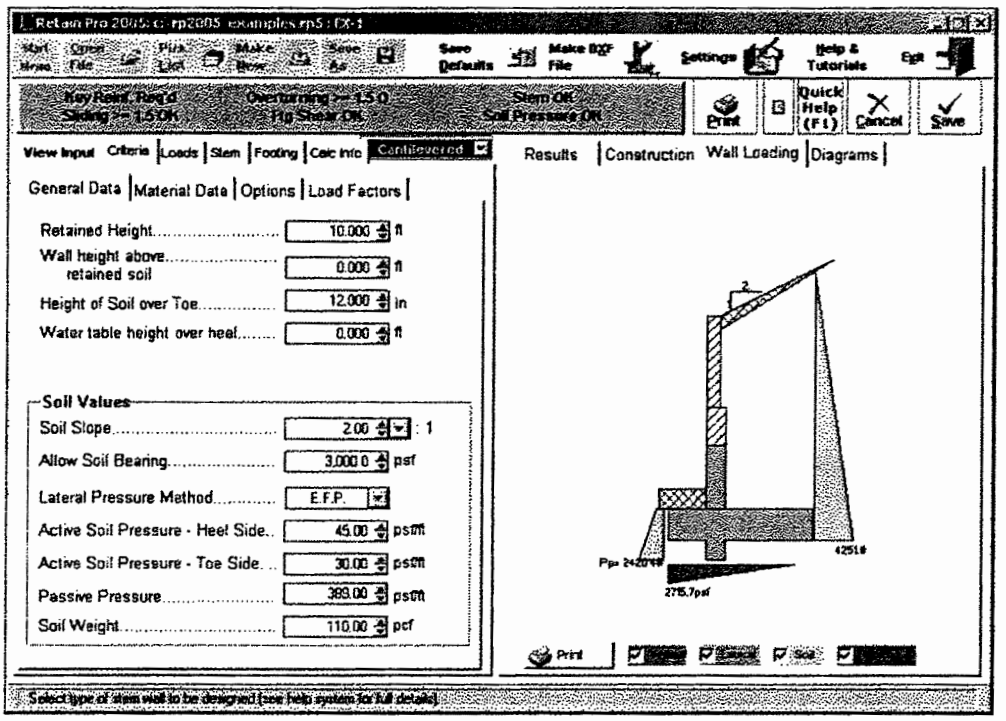

Note that if seismic or adjacent footing loads are used, the pressure diagram curve does not graphically depict these loads, but they are included in the reaction shown at the bottom of the active pressure diagram.

THIS DIAGRAM WILL NOT BE COMPLETE UNTIL YOU HAVE ENTERED SUFFICIENT DATA. ONLY A DEFAULT GRAPHIC WILL APPEAR INITIALLY.

Stem Diagram - Envelope Curves

These curves display applied and resisting moments plotted along the height of the stem. Each change in section (material, thickness, or reinforcing) is marked. For concrete stem sections, the applied moments are factored. Resisting moments are based upon strength design rather than working stress as for masonry sections.

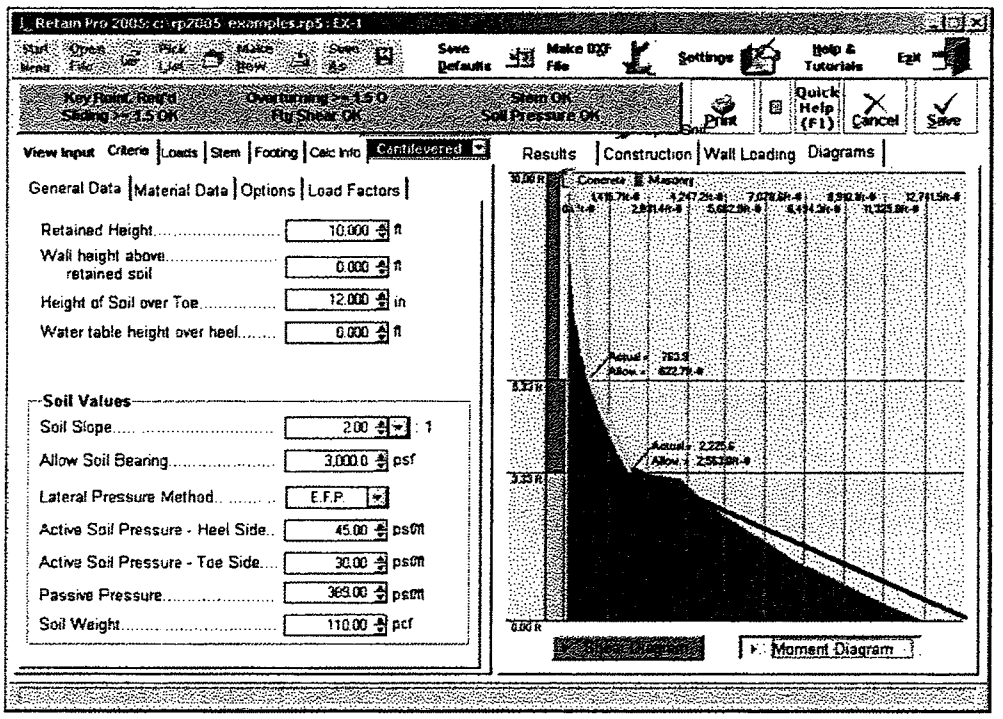

The moment resisting line is usually sloped to reflect change in resisting capacity with reduced remaining development length.

These curves will be useful for visualizing and determining cutoff points for reinforcing, and general viewing of the stem adequacy.

AUTO MAINTENANCE UPDATES

Retain Pro 2005 now has an automatic updating system to be sure you are always up to date on any maintenance and improvement updates we issue.

At timed intervals, after you start Retain Pro 2005, you will be asked whether you want to check for updates. Selecting "Yes" will shut down Retain Pro and launch the updating program (named RPUPDT.EXE).

This updating program will connect to www.retainpro.com (you need to have your Internet connection on) and compare the version you have installed with the latest version available, and then download the required update files as needed. (Note to your technical staff: we use strictly HTTP protocol over port 80 for all communications).

On the "Settings" screen you will see a last tab called "Updates". On this tab a prompt will ask you for: "Days between update checks", and an entry for you to put a number between 0 and 20, and a little note says "enter zero to disable checking".

By selecting Make DXF File from the Task Bar you can create a "DXF" format file to import your complete Retain Pro retaining wall construction drawing into any of a number of CAD and drawing programs.

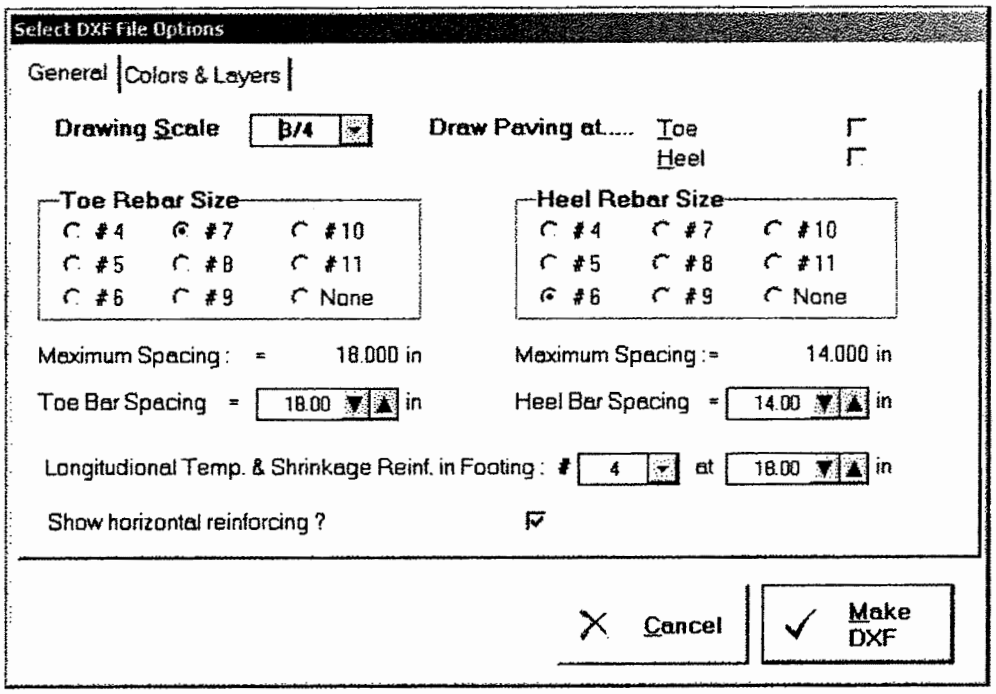

If you choose to open the DXF file from within AutoCAD, follow these directions:

1) Choose File/Open from the pull-down menu bar.
2) Save the existing file you were working with so as not to lose your changes.
3) Change the file type from the pull-down menu located below the file name prompt in the Open screen to DXF.
4) Locate the folder (directory) where the Retain Pro DXF file occurs.

5) Click on the file name and exit the dialog box by clicking on OK to open the file.
6) You may proceed to step 4 in the Drag and Drop directions (below) to save the file as a drawing or as a block for later insertion.

NOTE: The DXF file is converted to the scale that you choose in Retain Pro. You may need to convert the scale of the drawing to match the drawing that you will insert the block into. Refer to your AutoCAD help menu for scaling instructions.

You can also use Windows drag and drop feature to create a DWG file from Retain Pro's DXF file. This can only be done upon opening a new drawing and will not allow insertion of the DXF file as a drawing.

To use the Drag and Drop feature:

1) Start AutoCAD or AutoCAD LT (or other compatible) and choose to start a new drawing. You can not use an existing template drawing that contains any blocks or objects. Use the default acad.dwg that came with AutoCAD.
2) Open your file manager and proceed to the folder that contains the Retain Pro DXF file (HINT: Create your DXF file and save it to your Windows Desktop for easier manipulation).
3) Click on the DXF file and, holding down the right mouse button, drag the file into the AutoCAD window.
4) Save the file with any name you prefer. An AutoCAD DWG file will be created.
5) HINT - You may use long file names, however, if you choose to insert the file as a block you must use and underscore (_) character wherever a space occurs. The total length of the file name must be under 30 characters for AutoCAD to recognize it as an allowable block to be inserted.

NOTE: If the drawing is used as a block, there must be no spaces between the words in the name of the file. For example, if it is to be called Six Foot Wall.DWG, it must be written out as Six_Foot_Wall.DWG so that the spaces between words are filled with some other character than a space. This is a limitation of AutoCAD® that treats a block differently than it does a drawing.

Although this will create nearly all of the drawing, there still may be some touch-up and editing for your specific requirements.

Use this screen to establish up to eight layers for your CAD drawing.

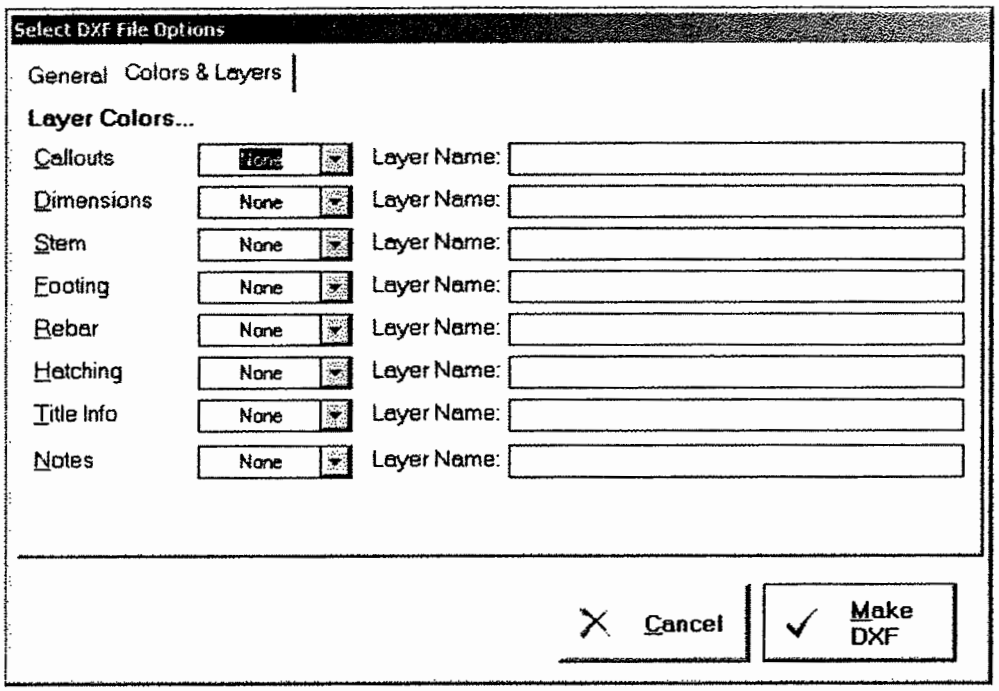

Clicking **HELP** on the Tool Bar will give you seven choices:

Topic Index, where you can scroll to select a topic that you'd like explained.

Tutorial, where you can scroll through a list of get-started topics.

FAQs directs you to **www.retainpro.com/support** where common technical FAQs are accessible and are updated frequently.

Email Support will connect you to the Internet and give you a ready-to-use screen where you can ask a technical support question and email it to our staff.

FAX Support gives you a form ready for you to fill out, print, and FAX to our support staff.

This Version will give you information about the Retain Pro version you are currently using.

Access User's Manual allows you to download the complete User's Manual (in Adobe Acrobat .pdf format) for viewing and printing.

You can also click QuickHelp (on the Task Bar) to get entry explanations from every screen.

Also note that for every entry there is a brief description of its function at the bottom of the screen.

Methodology & Design / Analysis Assumptions

We recommend you red these notes to give you a greater understanding of Retain Pro 2005 and familiarize yourself with the programs capabilities, assumptions, and design methodology.

This program is for both **cantilevered and restrained retaining walls, including gravity walls**. For cantilevered walls the base of the stem is fixed to the footing, and the footing is free to rotate on the supporting soil, and no lateral restraint can exist at or near the top of the wall (otherwise it is not a cantilevered wall).

For restrained walls ("basement" and tie-back") the program assumes either 100% fixed at base, or pinned. Lateral support is near or at the top, and moment/shears are computed at the base, maximum positive, and at the upper support. The program does not check flexural stress reduction for axial loads (the unity interaction formula) since in most cases of basement walls the h/t ratio is below about 10 for masonry walls and somewhat higher for concrete, and axial stresses are low. If axial stresses are considered significant (say over 1000 lbs. per ft. length of wall), the interaction should be checked at the point of maximum positive moment. For tie-back walls, you must check the wall span horizontally between tie-backs.

References used for the development of this program are listed in Appendix E.

Stem design material is limited to concrete or concrete block masonry. Design strength of concrete and masonry may be specified.

Conventional "heel" and "toe" terminology is used, whereby the "heel" side of the wall supports the retained earth. In this program, the "heel" distance is measured from the front face of the stem.

Concrete design for stem and footing is based upon ultimate strength design (SD) using factored loads. Factors for various building codes will be displayed on the Criteria > Load Factors page, and may be edited. Since they are editable, be sure to check them before starting a design since you may have changed them.

Masonry design is based upon the Allowable Stress Method (ASD).

A geotechnical engineer will have determined design criteria (equivalent fluid pressure, soil bearing, sliding coefficient, etc.). If this is not the case, the designer should exercise special care in selecting these values appropriate to the site conditions. Optionally, you can enter the angle of internal friction for the soil, and the program will compute the corresponding active pressure, using the Rankine or Coulomb formulas based upon the soil density and backfill slope you have specified.

If either the **Rankine or Coulomb method** is chosen, passive pressure and toe active pressure will be based upon the Rankine Formula, assuming a level toe-side backfill.

The **factor of safety** against sliding and overturning should be at least 1.5:1, and the program displays warning messages when this condition is not satisfied.

Where **stem thickness varies**, it is assumed that the front face (toe side) of the stem is flush, and the change in thickness occurs on the heel side.

Weight of concrete block masonry can be lightweight, medium weight, or normal weight, per the table in this User's Manual. These weights can be modified using the Criteria > Materials screen. Refer to Appendix C.

Horizontal temperature/shrinkage reinforcing is at the discretion of the designer and is not computed by the program. Minimum for concrete is 0.0020 times the area of the wall, and 0.0007 for masonry. Some designers may add a layer of reinforcing on the front face of the wall. Two layers of reinforcing is required by code for walls over 10 inches thick; however, some codes exempt "basement walls", and presumably retaining walls since they too are in contact with earth. For horizontal temperature and shrinkage reinforcing for various stems see Appendix A. Some engineers consider a stem wall like a slab-on-grade and use a lesser percentage of horizontal reinforcing.

Toe and heel footing reinforcing may not be required if the footing extends only a short distance beyond the face of the stem. In these cases, shear and bending can be resisted by plain concrete (flexural tension and shear). The program calculates whether flexural tension is adequate by computing the section modulus of the footing (deducting 2" from the bottom of the footing per ACI recommendation) and allowable flexural tension. If this is the case the program indicates that no reinforcing is required, however, the designer may want to include it.

Axial loads may be applied to the top of the stem, and are considered in the overall capacity interaction formulas. Allowable axial load for masonry stems is calculated using the total wall height as an unsupported column with a "K" factor of 2.0. The ratio of fa/Fa is then added to fb/Fb for each stem design height to give the interaction ratio for each stem section on the Stem screen.

Only "positive" eccentricities from the centerline of the top stem are accepted (i.e. toward the toe), since negative eccentricity could lead to unconservative results.

Excessively high axial loads are not anticipated by the program and should not be applied if they would cause tension in the bottom of the footing heel – the program assumes typical retaining wall conditions where the heel moment causes tension at the top of the footing. If a design requires a very high axial load, say, over 3 kips/lf, suggest suing a footing design software or hand calculations.

A vertical component of active pressure, P_v can be assumed to act along a vertical plane at the back of the footing and the program (Options screen) allows choices of whether it is used to affect soil pressure, overturning resistance, or sliding resistance. Some engineers consider it non-conservative to apply it for soil pressure calculations, or for sliding resistance. Textbook examples vary on this issue, so we have provided a "Yes/No" check box on Criteria > Options screen to make your choice. It can make a large difference in soil pressures. When the Rankine method is chosen, the line of action of the resultant is assumed to be the angle of the backfill slope, β, therefore, P_v is $P_a \sin\beta$. If the Coulomb method is chosen, the line of action is δ, which is assumed to be $\phi/2$. Therefore, for the Coulomb method $P_v = P_a \sin(\phi/2)$. For the EFP method, ϕ is obtained by back-solving the Rankine formula, but using $P_v = P_h \tan(\phi/2)$. This allows you to use a vertical component for a level backfill by checking the appropriate box on the Criteria > Options screen.

Special inspection for masonry as defined in the Uniform Building Code limits F'_m to one-half its specified value if special inspection is not provided, but does not effect E_m used to calculate modular ratio. To provide for this requirement you may check or un-check the box on the Stem screen. The allowable bending, shear, and axial stresses will be multiplied by one-half when calculating overall allowable values.

Surcharge can be composed of either dead load, live load, or both. For the design of the footing and stem sections it is factored per the Load Factor criteria selected.

Concrete block thickness' of 6", 8", 10", 12", 14", and 16" are allowed in the program.

Stem reinforcing may be #4 through #10 bars. Soft Metric sizes are shown in parenthesis alongside.

Critical section for bending and shear in the footing is at the face of the stem for concrete and 1/4 nominal thickness within the wall for masonry stems, for bending. For shear, for both concrete and masonry stems, the critical section is a distance "d" from the face of the stem toward the toe, and at the face of the stem for the heel. The program does not calculate toe or heel bar development lengths inward from the face of the stem (where the moment is maximum). When selecting and detailing the arrangement of toe and heel bars this should be considered. Refer to Appendix B for development lengths in concrete, which can be adjusted for the stress level.

The program designs key reinforcing but flexural and shear stresses for plain concrete are generally adequate, particularly if the depth to width ratio of the key is less than about 1.5:1. The program calculates the bending in the key and determines whether reinforcing is required. For determining section modulus, 3" is deducted from the key width per ACI recommendation. If so, a message will appear. You can then change the key dimensions until the message disappears, or use the rebar suggestions displayed. The key moment and shear is produced by the passive resisting pressure acting against the key.

Bond stress for masonry stems. Flexural bond is a slipping (grip) stress between reinforcing and grout, resulting from the incremental change in moment from one point to another, and is a function of the total shear at the section. The program does not specifically check bond stress, but does use the formula $\mu = M / (j\ d\ \pi\ d_b)$, and compares this with the allowable development length. The formula for bond, relating to shear, is: $\mu = V / (\Sigma_o\ j\ d)$, where Σ_o is the perimeter of the bar(s) per linear foot. "j" and "d" are the familiar terms. This can be re-written to be approximately: $\mu = 0.35\ V\ s / d_b\ j\ d$, where "s" is the bar spacing in feet and d_b is the bar diameter, if the designer wishes to check to the bond.

Bond stress in masonry retaining walls is of questionable significance since the bars are customarily cast in grout which by code must be at least 2,000 psi, therefore comparable to embedment in concrete. Furthermore, Amrein (see bibliography) quotes a research study concluding the bond stress could be 400 psi based upon experimental studies showing minimum achieved stresses of 1,000 psi, thereby giving the former value a safety factor of 2.5.

This is probably a moot issue since rarely would bond stresses govern over shear stresses, particularly if the stress level in the reinforcing is factored in. Additionally, development lengths for reinforcing in masonry, and code required lap lengths, are considered quite conservative.

A lap length dilemma occurs when a masonry stem extends above a concrete stem. To illustrate, consider this: A #7 bar in concrete must be lapped 5'-2" (assuming class B splices, f_y = 60ksi, f'_c = 3,000 psi) whereas the same bar in masonry must only be lapped 3'-6" (assuming F_y = 24,000 psi). Nevertheless, that is the code, and furthermore no reduction is permitted for under-stressed reinforcing. The designers dilemma is deciding how far up a concrete stem must extend before continuing in masonry. Using the #7 bar example, one would extend the concrete portion up about 5'-6", then continue with masonry. In this case the bars in the masonry would need to lap below (into the concrete) 48 bar diameters (for F_y = 24,000 psi). Alternatively, and seemingly more logical, would be to extend the reinforcing in the concrete portion up into the masonry 48 bar diameters. But, in this case, how far up should the concrete portion extend? This is the designers' dilemma, and there appears to be no published

guidelines. The program skirts the issue by only giving you the code required "lap lengths if above / below" the section considered.

Slab restraint at the base can be specified on the Criteria > Options screen. The program only allows this restraint to occur at the top of the footing – not higher.

Supplementary specifications or notes for the construction of the retaining wall should always be provided, including provisions for draining backfill and other site conditions affecting the design.

RESTRAINED WALLS:

A vertical component of active pressure is not activated, whether or not it is check on the Options screen, since the top of the wall is assumed not to deflect and thereby not activate such force. Overturning moment is not applicable, and therefore not displayed, since lateral stability is by restraint at or near the top of the wall and at the base either by slab restraint or a combination of friction and passive resistance.

When floor slab restraint is specified on the Options screen, the point of lateral support is assumed to be at the top of the footing. This may not be strictly true but is considered a reasonable design assumption.

When 100% base fixity is selected, and floor slab restraint is provided, soil pressures are computed as for cantilevered walls, using the fixed moment at the base of the stem as the overturning moment. Bending in toe of footing neglects any stiffening effect of floor slab. For this case, passive and frictional resistances are not displayed, nor is sliding ratio, but total lateral force at base is shown for checking floor slab.

When 100% base fixity is selected, and no floor slab restraint, soil pressures are computed as for cantilevered walls but using the fixed moment at the base of the stem as the overturning moment, and sliding resistance based upon lateral reaction at the base of the footing—this is somewhat conservative since if passive resistance is available the point of lateral support is slightly above the bottom of the footing.

When "Fix Stem @ Base" is unchecked, the footing will not be designed to provide base-of-stem fixity. In this case, the total lateral reactions assume all lateral restraint at bottom occurs at bottom of footing (pin-connection) even if floor slab is present. This may be slightly conservative or unconservative depending upon whether floor slab is present, or if not, if passive resistance is available. Reaction at top restraint assumes pin-connection at bottom of footing. Shear at base of stem is computed based upon lateral force above that point.

When base of stem is not "fixed" by footing, there will still be some moment at base of stem due to any eccentricity of resultant loads on the footing, and if slab restraint is

not provided, an additional moment due to the lateral reaction at the bottom of the footing multiplied by the thickness of the footing. Since the bottom of the stem is assumed "pinned," for analysis purposes, the resulting soil pressure will be trapezoidal; however, in actuality there will be some fixity at the stem-footing interface. If the Stem Base moment capacity (shown on Stem Screen) is greater than the Moment used for Soil Pressure (shown on Stability screen), then the soil pressure will be uniform over the footing width.