DEPARTMENT OF THE AIR FORCE
HEADQUARTERS 27th FIGHTER WING (ACC)
CANNON AIR FORCE BASE, NEW MEXICO

15 SEP 1993

ENTERED

1993 SEP
RECEIVED
HAZARDOUS WASTE
PROGRAM

27 FW/CC
100 S DL Ingram Blvd Suite 100
Cannon AFB NM 88103-5214

Ms. Barbara Hoditschek
RCRA Permits Manager
New Mexico Environment Department
1190 St Francis Drive
P O Box 26110
Santa Fe NM 87502

RE: Submittal of Permit Application for Melrose Air Force Range (MAFR)

Dear Ms. Hoditschek

Cannon AFB is pleased to present the RCRA Permit Application for Melrose AFR. Based upon the 31 Aug 93 meeting with your office, we are confident the application is administratively complete. We have incorporated many of your comments from the 31 Aug 93 meeting and feel we have made good progress toward providing an application which is also technically complete.

We are prepared to progress with permit application fees so your review may begin. However, if we do not receive guidance and final cost of the application fee by approximately 26 Sep 93, we will have difficulty processing payment until after 1 Oct 93. This is due to the end of our fiscal year.

We greatly appreciate and thank you for the time you and your staff have taken to provide technical support and feedback. If you have any questions, please contact our office at (505) 784-4348. Our point of contact is Capt Greg Walters.

Sincerely

WILLIAM M. GUTH, Colonel, USAF
Commander

1 Atch
RCRA Permit Application for
Melrose AFR

LIBRARY COPY

27th FIGHTER WING

TEAM CANNON

RCRA PERMIT APPLICATION FOR OPEN DETONATION ACTIVITIES AT MELROSE AIR FORCE RANGE

Volume I

September 1993

CANNON AFB, NEW MEXICO

CANNON AIR FORCE BASE
RCRA PERMIT APPLICATION FOR
OPEN DETONATION ACTIVITIES
AT
MELROSE AIR FORCE RANGE

Volume I

September 1993

Prepared for
27 CES/CEV
Cannon Air Force Base, New Mexico 88103-5136

Prepared by
Radian Corporation
120 S. Jefferson Circle
Oak Ridge, Tennessee 37830

CANNON AIR FORCE BASE
RCRA PERMIT APPLICATION FOR
OPEN DETONATION ACTIVITIES
AT
MELROSE AIR FORCE RANGE

Volume I

September 1993

Prepared for
27 CES/CEV
Cannon Air Force Base, New Mexico 88103-5136

Prepared by
Radian Corporation
120 S. Jefferson Circle
Oak Ridge, Tennessee 37830
Doc. #F930618.1JY51

CONTENTS

PAGE

TABLES xi
FIGURES xi
ACRONYMS AND INITIALISMS xii

A. APPLICATION A-1
A-1 INTRODUCTION A-1
A-2 EPA APPLICATION FORM A-1

B. FACILITY DESCRIPTION B-1
B-1 GENERAL DESCRIPTION [NMHWMR-7, Part IX; 40 CFR 270.14(b)(1)] . . B-1
B-1a Location [40 CFR 270.14(6)] B-1
B-1b History B-9
B-2 TOPOGRAPHIC MAP [NMHWMR-7, Part IX;
40 CFR 270.14(B)(19)(I) AND (VI)] B-10
B-2a Land Use [40 CFR 270.14(b)(19)(iv] B-10
B-2a(1) OD Facility Boundary [40 CFR.270.14(b)(19)(vii)] B-11
B-2a(2) Wind Rose [40 CFR 270.14(19)(v)] B-11
B-2a(3) Access Control [40 CFR 270.14(19)(viii)] B-11
B-2a(4) Injection and Withdrawal Wells [40 CFR 270.14(b)(19)(ix)] B-13
B-2a(5) Buildings, Treatment, Storage, Disposal Areas, and Other Structures
[40 CFR 270.14(b)(19)(x)] B-13
B-2a(6) Recreation Areas [40 CFR 270.14(b)(19)(x)] B-13
B-2a(7) Runoff Control System [40 CFR 270.14(b)(19)(x)] B-17
B-2a(8) Storm, Sanitary, and Process Sewers [40 CFR 270.14(b)(19)(x)] . . . B-17
B-2a(9) Loading and Unloading Areas [40 CFR 270.14(b)(19)(x)] B-17
B-2a(10) Fire Control Facilities [40 CFR 270.14(b)(19)(x)] B-17
B-2a(11) Surface Waters [40 CFR 270.14(b)(19)(ii) and (iii)] B-18
B-2a(12) Flood Control/Drainage Barriers [40 CFR 270.14(b)(19)(xi)] B-18
B-3 LOCATION STANDARDS (NMHWMR-7, Part V; 40 CFR 264.18) B-18
B-3a Seismic Considerations [40 CFR 264.18(a)] B-18
B-3b Floodplain Standard [40 CFR 264.18(b)] B-18
B-4 TRAFFIC INFORMATION [NMHWMR-7, Part IX; 40 CFR 270.14(b)(10)] . . B-21
B-4a Traffic Control [40 CFR 270.14(b)(10)] B-21
B-4b Access Road Surfacing [40 CFR 270.14(b)(10)] B-21
B-4c Load Bearing Capacity [40 CFR 270.14(b)(10)] B-22
B-4d Traffic Control Signals [40 CFR 270.14(b)(10)] B-22

C. WASTE CHARACTERISTICS C-1
C-1 CHEMICAL AND PHYSICAL ANALYSES [NMHWMR-7, Parts V and IX;
40 CFR 264.13(a) and 270.14(b)(2)] C-1
C-1a Containers [40 CFR 264.175(c) and 270.15(b)] C-13
C-1b Tanks (40 CFR 270.16) C-13

CONTENTS (Continued)

Page

C-1c Surface Impoundments (40 CFR 270.17) C-13
C-1d Waste Piles (40 CFR 270.18) C-13
C-1e Incinerators (40 CFR 270.19 and 270.62) C-13
C-1f Land Treatment (40 CFR 264.273 and 270.20) C-13
C-1g Landfills (40 CFR 264.301 and 270.21) C-14
C-1h Additional Requirements for Land Storage, Treatment, and Disposal Facilities [40 CFR 270.14(c)] C-14
C-2 WASTE ANALYSIS PLAN [NMHWMR-7, Parts V and IX; 40 CFR 264.13(b) and (c) and 270.14(b)(3)] C-14
C-2a Parameters and Rationale [40 CFR 264.13(b)(1)] C-15
C-2b Test Methods [40 CFR 264.13(b)(2)] C-15
C-2c Sampling Methods [40 CFR 264.13(b)(3)] C-15
C-2d Frequency of Analysis [40 CFR 264.13(b)(4)] C-17
C-2e Additional Requirements for Ignitable, Reactive, or Incompatible Wastes [40 CFR 264.13(b)(6) and 264.17] C-17
C-3 ADDITIONAL REQUIREMENTS FOR WASTES GENERATED OFF-SITE [NMHWMR-7, Part V; 40 CFR 264.13(c)] C-17

D. PROCESS INFORMATION D-1
D-1 OD OPERATIONAL PROCEDURES D-2
D-2 CONTAINERS [NMHWMR-7, Parts V and IX; 40 CFR 264.17(a) and (b), 264.601, and 270.15 through 21] D-3
D-3 TANKS (NMHWMR-7, Part IX; 40 CFR 270.16) D-4
D-4 WASTE PILES (NMHWMR-7, Part IX; 40 CFR 270.17) D-4
D-5 SURFACE IMPOUNDMENTS (NMHWMR-7, Part IX; 40 CFR 270.18) D-4
D-6 INCINERATORS (NMHWMR-7, Part IX; 40 CFR 270.19) D-4
D-7 LAND TREATMENT (NMHWMR-7, Part IX; 40 CFR 270.20) D-4
D-8 LANDFILLS (NMHWMR-7, Part IX; 40 CFR 270.21) D-4
D-9 MISCELLANEOUS UNITS (NMHWMR-7, Parts V and IX; 40 CFR 264.601 and 270.23) D-4
D-9a(1) Basic Design Parameters, Dimensions, and Materials of Construction [40 CFR 264.601 and 270.23 (a) (1) and (2)] D-5
D-9a(2) Description of How Design Promotes Proper Drainage and Prevents Constant Standing Water [40 CFR 264.601 and 270.23(a)] D-5
D-9a(3) Capacity of the OD Unit Relative to the Volume of Ordnance Disposed of During One Operation [40 CFR 264.601 and 270.23(a)] D-6
D-9a(4) Provisions for Preventing or Managing Runon [40 CFR 264.601 and 270.23(a)] D-6
D-9a(5) How Accumulated Liquids Can Be Analyzed and Removed to Prevent Overflow [40 CFR 264.601 and 270.23(a)] D-6
D-9b Special Requirements for Ignitable or Reactive Waste [40 CFR 264.17(a), 264.176, 265.382, and 270.15(c)] D-6

CONTENTS (Continued)

Page

D-9c Special Requirements for Incompatible Wastes [40 CFR 264.17(b), 264.177, and 270.23(a)] D-7
D-9d Management of Waste Munition Ash/Residue [40 CFR 264.15(c) and 270.23(a)] D-7
D-10 EFFECTIVENESS OF EOD TREATMENT [40 CFR 270.23(d)] D-7
D-11 BIENNIAL REPORTING (NMHWMR-7, Part V; 40 CFR 264.75 and 264.602) D-8
D-11a Unmanifested Waste Report (40 CFR 264.76 and 264.602) D-8
D-11a(1) Additional Reporting (40 CFR 264.77 and 264.602) D-8

E. ENVIRONMENTAL PERFORMANCE STANDARDS E-1
E-1 SUBSURFACE ASSESSMENT [NMHWMR-7, Part V; 40 CFR 264.601(a)] . . E-1
E-1a Volume and Characteristic of the Waste [40 CFR 264.601(a)(1)] E-1
E-1b Hydrogeologic Characterization [40 CFR 264.601(a)(2) and 270.14(c)] E-2
E-1b(1) Depth to Uppermost Aquifer [40 CFR 270.14(c)(2)] E-3
E-1b(2) Estimated Annual Recharge [40 CFR 270.14(c)(2)] E-3
E-1b(3) Subsurface Characterization [40 CFR 270.14(c)(2)] E-3
E-1c Existing Groundwater Quality [40 CFR 264.601(a)(3)] E-4
E-1d Groundwater Direction and Flow Rate [40 CFR 264.601(a)(4)] E-4
E-1e Proximity to Groundwater Withdrawal Points [40 CFR 264.601(a)(5)] E-4
E-1f Assessment of Groundwater Migration Potential [40 CF4 264.601(a)(6) through (9)] E-8
E-2 SURFACE MEDIA ASSESSMENT [NMHWMR-7 Part V; 40 CFR 264.601(b)] E-10
E-2a Volume and Characteristics of the Waste [40 CFR 264.601(b)(1)] E-10
E-2b Containment Facilities [40 CFR 264.601(b)(2)] E-10
E-2c Hydrological Characteristics [40 CFR 264.601(b)(3)] E-10
E-2d Precipitation Patterns [40 CFR 264.601(b)(4)] E-11
E-2e Groundwater Data [40 CFR 264.601(b)(5)] E-11
E-2f Proximity to Surface Waters [40 CFR 264.601(b)(6)] E-11
E-2g Water Quality Data [40 CFR 264.601(b)(7) and (8)] E-11
E-2h Assessment of Surface Water Migration Potential [40 CFR 264.601(b)(9) through (11)] E-12
E-3 AIR ASSESSMENT [NMHWMR-7, Part V; 40 CFR 264.601(c)] E-12
E-3a Volume and Characteristics of the Waste [40 CFR 264.601(c)(2)] E-12
E-3b Reduction or Prevention of Emissions [40 CFR 264.601(c)(2)] E-13
E-3c Operating Characteristics [40 CFR 264.601(c)(3)] E-13
E-3d Atmospheric, Meteorological, and Topographic Characteristics [40 CFR 264.601(c)(4)] E-13

CONTENTS (Continued)

			Page
	E-3e	Existing Air Quality [40 CFR 264.601(c)(5)]	E-14
	E-3f	Assessment of Air Migration Potential [40 CFR 264.601(c)(b) and (7)]	E-16
E-4	POTENTIAL IMPACT ASSESSMENT [NMHWMR-7, Part V; 40 CFR 264.601(a),(b), and (c)]		E-17
	E-4a	Land Uses [40 CFR 264.301(a)(6)]	E-17
	E-4b	Human Health [40 CFR 264.601(a)(8), 264.601(b)(10), and 264.601(c)(6)]	E-17
	E-4c	Vegetation and Wildlife [40 CFR 264.601(a)(9), 264.601(b)(11), and 264.601(c)(7)]	E-17
	E-4d	Other Environmental Impacts	E-18
	E-4d(1)	Airblast Limitations (30 CFR 816.67)	E-18
	E-4d(2)	Ground Motion Limitations [30 CFR 816.67(d)]	E-18
F.	PROCEDURES TO PREVENT HAZARDS		F-1
F-1	SECURITY (NMHWMR-7, Part V; 40 CFR 264.14)		F-1
	F-1a	Security Procedures and Equipment (40 CFR 264.14)	F-1
	F-1a(1)	24-Hour surveillance system [40 CFR 264.14(b)(1)]	F-1
	F-1a(2)	Barrier and Means to Control Entry [40 CFR 264.14(b)(2)(i) and (ii)]	F-3
	F-1a(3)	Warning Signs [40 CFR 264.14(c)]	F-3
	F-1b	Waiver [40 CFR 264.14(a)]	F-3
F-2	INSPECTION SCHEDULE [NMHWMR-7, Part V and Part IX; 40 CFR 264.15 and 270.14(b)(5)]		F-3
	F-2a	General Inspection Requirements [40 CFR 264.15(a)(b) and 264.33]	F-3
	F-2a(1)	Types of Problems [40 CFR 264.15(b)(3)]	F-4
	F-2a(2)	Frequency of Inspection [40 CFR 264.15(b)(4)]	F-4
	F-2b	Specific Process Inspection Requirements [40 CFR 264.15(b)(4) and 270.14(b)(5)]	F-5
	F-2b(1)	Container Inspection (40 CFR 264.174)	F-5
	F-2b(2)	Tank Inspection (40 CFR 264.194)	F-5
	F-2b(3)	Waste Pile Inspection [40 CFR 264.254, 270.14(b)(5), and 270.18(e)]	F-6
	F-2b(4)	Surface Impoundment Inspection [40 CFR 264.22(b), 270.14(b)(5), and 270.17(d)]	F-6
	F-2b(5)	Incinerator Inspection (40 CFR 264.347)	F-6
	F-2b(6)	Landfill Inspection [40 CFR 264.15(a), 264.303, and 270.21(d)]	F-6
	F-2b(7)	Thermal Treatment-Monitoring and Inspection [40 CFR 264.347(a)(3)]	F-6
	F-2b(8)	Miscellaneous Unit Inspection (40 CFR 264.602)	F-6
	F-2c	Remedial Actions [40 CFR 264.15(c)]	F-6
	F-2d	Inspection Log [40 CFR 264.15(d)]	F-7

CONTENTS (Continued)

Page

F-3 WAIVER OF PREPAREDNESS AND PREVENTION REQUIREMENTS (NMHWMR-7, Part V and Part IX, and 40 CFR 264.32 and 264.35) F-7
F-3a Equipment Requirements [40 CFR 264.32(c) and (d)] F-7
F-3b Aisle Space Requirements (40 CFR 264.35) F-13
F-4 PREVENTIVE PROCEDURES, STRUCTURES, AND EQUIPMENT [NMHWMR-7, Part V and Part IX; 40 CFR 264.33 AND 270.14(b)(8)] F-13
F-4a Transportation and Unloading Operations [40 CFR 270.14(b)(8)(i)] F-13
F-4b Runoff [40 CFR 270.14(b)(8)(ii)] F-14
F-4c Water Supplies [40 CFR 270.14(b)(8)(iii)] F-14
F-4d Equipment and Power Failure [40 CFR 270.14(b)(8)(iv] F-15
F-4e Personal Protection Equipment [40 CFR 270.14(b)(8)(v)] F-15
F-5 PREVENTION OF REACTION OF IGNITABLE, REACTIVE, AND INCOMPATIBLE WASTES [NMHWMR-7, Part IX; 40 CFR 270.14(b)(9)] . . . F-15
F-5a Precautions to Prevent Ignition or Reaction of Ignitable or Reactive Wastes [40 CFR 264.17(a) and 270.14(b)(9)] F-15
F-5b General Precautions for Handling Ignitable or Reactive Wastes or Accidentally Mixing Incompatible Wastes [40 CFR 264.17(b) and 270.14(b)(9)] F-16
F-5c Management of Ignitable or Reactive Wastes in Containers [40 CFR 264.176 and 270.15(c)] F-16
F-5d Management of Incompatible Wastes in Containers [40 CFR 264.177(a) and 270.15(d)] F-16
F-5e Management of Ignitable or Reactive Wastes in Tanks [40 CFR 264.198(a) and 270.16(j)] F-16
F-5f Management of Incompatible Wastes in Tanks [40 CFR 264.199(a) and (b) and 270.16(j)] F-16
F-5g Management of Ignitable or Reactive Wastes in Waste Piles [40 CFR 264.17(b) and 270.18(f)] F-16
F-5h Management of Incompatible Wastes in Waste Piles [40 CFR 264.17(b) and 270.18(g)] F-17

G. CONTINGENCY PLAN G-1
G-1 GENERAL INFORMATION [NMHWMR-7, Part V and Part IX; 40 CFR 264.50 through 264.56 and 270.14(b)(7)] G-1
G-2 EMERGENCY COORDINATORS [NMHWMR-7, Parts V and IX; 40 CFR 264.52(d), 264.55, and 270.14(b)(7)] G-1
G-3 IMPLEMENTATION OF CONTINGENCY PLAN [NMHWMR-7, Part V; 40 CFR 264.52(a)] G-2
G-4 EMERGENCY RESPONSE PROCEDURES [NMHWMR-7, Part V; 40 CFR 264.52(a)] G-2
G-4a Notification G-2
G-4b Evacuation Routes [40 CFR 264.52(f)] G-6
G-4c Containment and Control [40 CFR 270.14(b)(7) and 264.56(b)] . . . G-6
G-4c(1) OD Unit G-6
G-4c(2) Ordnance Transportation Vehicle G-7

CONTENTS (Continued)

Page

G-4c(3) Material Release G-7
G-4c(4) Severe Weather Conditions G-7
G-4c(5) Emergency Coordinator Measures G-7
G-4c(6) Follow-Up Actions G-8
G-5 EMERGENCY EQUIPMENT [40 CFR 264.52(e), 264.56(h)(2), and 264.56(i)] G-8
G-6 COORDINATION AGREEMENTS (NMHWMR-7, Part V; 40 CFR 264.37) . . G-9
G-7 REQUIRED REPORTS [NMHWMR-7, Part V; 40 CFR 264.56(j)] G-9

H. PERSONAL TRAINING H-1
H-1 OUTLINE OF TRAINING PROGRAM [NMHWMR-7, Parts V and IX; 40 CFR 264.16 AND 270.14(b)(12)] H-1
H-1a Job Titles and Duties [40 CFR 264.16(d)(1) and (2)] H-1
H-1b Training Content, Frequency, and Techniques [40 CFR 264.16(c) and 264.16(d)(3)] H-4
H-1b(1) EOD Training Program [40 CFR 264.16(a)(2) and (3)] H-4
H-1b(2) Annual RCRA Training [40 CFR 264.16(a)(2) and (3) and 264.16(d)(4)] H-10
H-1b(3) Cannon AFB Training Program [40 CFR 264.16(a)(2) and (3) and 264.16(d)(4)] H-12
H-1c Training Director [40 CFR 264.16(a)(2), 264.16(c), and 264.16(d)(3) and (d)(4)] H-14
H-1d Relevance of Training to Job Positions [40 CFR 264.16(a)(1)] H-14
H-1e Training for Emergency Response [40 CFR 264.16(a)(3)] H-14
H-2 IMPLEMENTATION OF THE TRAINING PROGRAM [NMHWMR-7, Part V; 40 CFR 264.16(b) and (c)] H-15

I. CLOSURE PLAN, POST-CLOSURE PLAN, AND FINANCIAL REQUIREMENTS . . I-1
I-1 CLOSURE PLAN [NMHWMR-7, Part V and Part IX; 40 CFR 264.112 and 270.14(b)(13)] I-1
I-1a Closure Performance Standard (40 CFR 264.111) I-1
I-1b Partial and Final Closure Activities [40 CFR 264.112(a)(1) and (b)(4)] I-2
I-1b(1) Maximum Extent of Unclosed Portions [40 CFR 264.112(b)(2)] I-2
I-1c Maximum Waste Inventory [40 CFR 264.112(b)(3)] I-2
I-1d Schedule for Closure [40 CFR 264.112(b)(6)] I-2
I-1d(1) Time Allowed for Closure [40 CFR 264.113(a) and (b)] I-2
I-1d(1)(a) Extensions for Closure Time [40 CFR 264.113(a) and (b)] I-3
I-1e Sampling Requirements [40 CFR 264.112(b)(4)] I-3
I-1e(1) Statistical Analysis Requirements (40 CFR 264 Appendix IV) I-4
I-1f Inventory Disposal, Removal, or Decontamination of Equipment [40 CFR 264.112(b)(4), 264.112(e), and 264.114] I-5
I-1g Financial Requirements for Closure (40 CFR 264.142 and 264.143) I-8

CONTENTS (Continued)

Page

I-2 POST-CLOSURE PLAN (NMHWMR-7, Parts V and IX; 40 CFR 264.603, 264.118, and 264.310) I-8
- I-2a Post-Closure Care and Use of Property I-8
- I-2a(1) Post-Closure Care Period [40 CFR 264.117(a)(1)] I-8
- I-2a(2) Post-Closure Security [40 CFR 264.14(b)] I-8
- I-2a(3) Post-Closure Use of Property I-9
- I-2b Post-Closure Contact I-9
- I-2c Post-Closure Care Monitoring (40 CFR 264.602) I-9
- I-2d Post-Closure Final Cover Requirements (40 CFR 264.310) I-10
- I-2e Maintenance and Inspection Requirements [40 CFR 264.118(b)] . . . I-10
- I-2f Amendment of Post-Closure Plan [40 CFR 264.118(d)] I-11
- I-2g Post-Closure Notices (40 CFR 264.116 and 264.119) I-13
- I-2h Certification of Completion of Post-Closure Care (40 CFR 264.120) I-13
- I-2i Financial Requirements for Post-Closure (40 CFR 264.144 and 264.145) I-13

J. OTHER FEDERAL LAWS J-1

K. CERTIFICATION K-1

L. BIBLIOGRAPHY L-1

APPENDIX A: RCRA PART A APPLICATION
APPENDIX B: FACILITY DESCRIPTION
APPENDIX B1-1: 100-YEAR FLOODPLAIN STUDY, OD UNIT, MELROSE AFR
APPENDIX B1-2: 100-YEAR FLOODPLAIN MAP, OD AREA, MELROSE AFR
APPENDIX C: WASTE CHARACTERISTICS
APPENDIX C1-1: WASTE MUNITIONS CARTRIDGE COMPONENTS AND COMBUSTION PRODUCTS
APPENDIX C1-2: CHEMICAL COMPONENTS AND COMBUSTION PRODUCTS OF SMOKE AND ILLUMINATION SIGNAL
APPENDIX C1-3: MISCELLANEOUS EXPLOSIVE MATERIALS
APPENDIX C1-4: SAMPLING AND ANALYSIS PLAN FOR THE MELROSE AFR OD AREA
APPENDIX C1-5: AIR FORCE SUPPLY FORMS
APPENDIX D: PROCESS INFORMATION
APPENDIX D1-1: ITEMIZATION OF WASTE MUNITIONS DISPOSAL AT MELROSE AFR OD AREA
APPENDIX D1-2: CANNON AFB REGULATION 136-18
APPENDIX D1-3: AIR FORCE TECHNICAL ORDER 11A-1-42
APPENDIX D1-4: AIR FORCE TECHNICAL ORDER 60A-1-1-31
APPENDIX D1-5: MAINTENANCE OPERATIONS INSTRUCTIONS 136-6
APPENDIX D1-6: AIR FORCE REGULATION 127-100
APPENDIX D1-7: TECHNICAL DRAWINGS

CONTENTS (Continued)

		Page
APPENDIX E:	ENVIRONMENTAL PERFORMANCE STANDARDS	
APPENDIX E1-1:	GEOLOGY AND ANALYTICAL RESULTS FOR SOILS AT THE OPEN BURN/OPEN DETONATION THERMAL TREATMENT FACILITY	
APPENDIX F:	PROCEDURES TO PREVENT HAZARDS	
APPENDIX F1-1:	OPERATOR'S INSPECTION GUIDE AND TROUBLE REPORT, AF 1800	
APPENDIX G:	CONTINGENCY PLAN	
APPENDIX G1-1:	CANNON AFB CONTINGENCY PLAN	
APPENDIX H:	PERSONAL TRAINING	
APPENDIX H1-1:	SPECIALITY TRAINING STANDARDS PROFICIENCY CHECKLIST STS-464X0	

TABLES

PAGE

C-1. Waste analysis data: basic explosive compositions C-2
C-2. Physical and chemical properties of common energetic materials. C-4
C-3. Waste analysis data: typical ordnance to be open-burned/open-detonated. C-10
C-4. Test methods for munitions residues C-16
C-5. Sampling methods for munitions residue C-17
D-1. Disposal Range Separation Distances (40 CFR 265.382) D-6
E-1. Groundwater Quality, Range Control Operations Water Well, Melrose AFR E-5
E-2. Summary of SWMUs at the Melrose AFR. E-9
E-3. Current pollution emissions at the Melrose AFR, New Mexico E-15
E-4. Distances for the OD of explosives on the ground E-19
E-5. Maximum ground vibration (peak particle velocity) E-20
F-1. Westar Corporation's contractual responsibilities F-2
F-2. General inspection requirements F-9
G-1. Cannon AFB disaster control group phone list G-4
G-2. Local agency emergency response phone list G-5
I-1. Estimated closure schedule I-3
I-2. Standard T-Tables 0.05 level of significance I-6
I-3. Inspection and maintenance plan for Melrose AFR OB/OD area I-11

FIGURES

PAGE

B-1. Regional Location Map of the Melrose AFR B-2
B-2. Vicinity Map of the Melrose AFR and Cannon AFB B-3
B-3. Topographic Map of the Melrose AFR OD area. B-5
B-4. Existing Land Use at the Melrose AFR B-7
B-5. Wind Rose B-12
B-6. Location Map for Wells at the Melrose AFR. B-15
B-7. Open Detonation Unit B-19
F-1. OB/OD unit inspection log F-8
F-2. Environmental Management Flight OB/OD inspection log F-10
G-1. Pollution incident report G-11
I-1. Melrose AFR OD area post-closure inspection log I-12

ACRONYMS AND INITIALISMS

ADR	Ammunition Disposal Report
AFR	Air Force Range
ASTM	American Standard
BCE	Base Civil Engineer
BSG	Below Surface Grade
CAFR	Cannon Air Force Base Regulation
CER	Civil Engineering/Real Property Flight
CES	Civil Engineering Squadron
CEV	Environmental Management Flight
CFR	Code of Federal Regulations
COMSEC	Communication Security
DoD	U.S. Department of Defense
DRMO	Defense Reutilization and Marketing Office
DZ	Drop Zone
EMS	Equipment Maintenance Squadron
EMU	Munitions Flight
EOD	Explosive Ordnance Disposal
EPA	U.S. Environmental Protection Agency
gpm	gallons per minute
HazMat	Hazardous Materials
HMX	cyclotetramethylenetetranitramine
MSA	Munitions Storage Facility
NAAQS	National Ambient Air Quality Standards
NEW	Net Explosive Weight
NGVD	National Geodetic Vertical Data
NMED	New Mexico Environmental Department
NRC	National Response Center
OB	Open Burned
OD	Open Detonation
OHMTADS	Oil/Hazardous Materials Technical Assistance System
OPLAN	Operations Plan
OPSEC	Operations Security
OSHA	Occupational Safety and Health Administration
OSMRE	Office of Surface Mining Reclamation and Enforcement
PPE	Personal Protective Equipment
QA	Quality Assurance
QC	Quality Control
RCO	Range Control Office
RCRA	Resource Conservation and Recovery Act
RDX	cycletrimethylenetrinitramine
RFA	RCRA Facility Assessment
RI	Remedial Investigation
SCS	Soil Conservation Service
SFO	Senior Fire Officer

STS	Speciality Training Standard
SWMUs	Solid Waste Management Units
TSD	Treatment, Storage, or Disposal Facility
Tetryl	trinitromethylnitramine
TNT	trinitrotoluene
TOs	Technical Orders
TOSSs	Television Ordnance Scoring Systems
USAF	U.S. Air Force
USGS	U.S. Geological Survey
UXOs	unexploded ordnances

A. APPLICATION

A-1 INTRODUCTION

This permit application is for the Cannon Air Force Base (AFB)/Melrose Air Force Range (AFR) open detonation (OD) area. The permit application was prepared for submission to the New Mexico Environmental Department (NMED), Hazardous and Radioactive Materials Bureau, to meet all applicable requirements of the New Mexico Hazardous Waste Management Regulations, Revision 7 (NMHWMR-7), which were promulgated under the New Mexico Hazardous Waste Act. [These regulations incorporated, by reference, U.S. EPA rules promulgated pursuant to the Resource Conservation and Recovery Act (RCRA) including those relating to Part B applications (Subpart X Miscellaneous Units)].

This permit application will allow Cannon AFB/Melrose AFR to continue on-site OD treatment of obsolete or unserviceable, conventional or off-specification munitions generated by Cannon AFB in support of its U.S. Air Force (USAF) mission. Cannon AFB is not seeking a permit for open burning (OB) of waste munitions at this time. Should Cannon AFB elect to open burn wastes, it will apply for a class 3 permit modification. Both Part A and Part B of this permit application for the OD unit are enclosed in this one document to fully establish all necessary permitting requirements.

The Explosive Ordnance Flight is responsible for day-to-day operations of the OD area and provides extensive training to personnel involved in storing, handling, and treating of waste munitions. Cannon AFB currently has no existing arrangements with alternate treatment facilities that could accommodate Cannon AFB's unserviceable munitions. Thus, the permitting of the OD unit at the Melrose range will ensure that Cannon AFB can continue its mission as a vital USAF installation and will eliminate the need and expense of finding alternate treatment facilities that can handle the Base's explosive munitions. It will also eliminate the need for transport of explosive wastes on public roads to alternate treatment facilities.

A-2 EPA APPLICATION FORM

Appendix A includes a copy of the ~~17 September 1993 Part A~~ application covering the OD unit at Melrose AFR. The Melrose AFR is owned by the U.S. Department of Defense (DoD) and is operated under contract by Westar Corporation, which also provides day-to-day maintenance of the OD area further described in this application. Westar Corporation is not involved with the operation of the OD unit, only to maintain the unit according to the design parameters identified in

Sect. D. The commander in charge at Cannon AFB is currently Colonel Lance L. Smith, USAF. Design diagrams and maps are included in the application as required by NMHWMR-7.

A. APPLICATION

A-1 INTRODUCTION

This permit application is for the Cannon Air Force Base (AFB)/Melrose Air Force Range (AFR) open detonation (OD) area. The permit application was prepared for submission to the New Mexico Environmental Department (NMED), Hazardous and Radioactive Materials Bureau, to meet all applicable requirements of the New Mexico Hazardous Waste Management Regulations, Revision 7 (NMHWMR-7), which were promulgated under the New Mexico Hazardous Waste Act. [These regulations incorporated, by reference, U.S. EPA rules promulgated pursuant to the Resource Conservation and Recovery Act (RCRA) including those relating to Part B applications (Subpart X Miscellaneous Units)].

This permit application will allow Cannon AFB/Melrose AFR to continue on-site OD treatment of obsolete or unserviceable, conventional or off-specification munitions generated by Cannon AFB in support of its U.S. Air Force (USAF) mission. Cannon AFB is not seeking a permit for open burning (OB) of waste munitions at this time. Should Cannon AFB elect to open burn wastes, it will apply for a class 3 permit modification. Both Part A and Part B of this permit application for the OD unit are enclosed in this one document to fully establish all necessary permitting requirements.

The Explosive Ordnance Flight is responsible for day-to-day operations of the OD area and provides extensive training to personnel involved in storing, handling, and treating of waste munitions. Cannon AFB currently has no existing arrangements with alternate treatment facilities that could accommodate Cannon AFB's unserviceable munitions. Thus, the permitting of the OD unit at the Melrose range will ensure that Cannon AFB can continue its mission as a vital USAF installation and will eliminate the need and expense of finding alternate treatment facilities that can handle the Base's explosive munitions. It will also eliminate the need for transport of explosive wastes on public roads to alternate treatment facilities.

A-2 EPA APPLICATION FORM

Appendix A includes a copy of the 24 February 1994 Part A application covering the OD unit at Melrose AFR. The Melrose AFR is owned by the U.S. Department of Defense (DoD) and is operated under contract by Westar Corporation, which also provides day-to-day maintenance of the OD area further described in this application. Westar Corporation is not involved with the operation of the OD unit, only to maintain the unit according to the design parameters identified in Sect. D.

The commander in charge at Cannon AFB is currently Colonel Lance L. Smith, USAF. Design diagrams and maps are included in the application as required by NMHWMR-7.

B. FACILITY DESCRIPTION

This section provides a general description of the OD unit at the Melrose AFR, as required by the (NMHWMR-7, Part IX, and 40 Code of Federal Regulations (CFR) 270.14(b)(1) and (b)(19). The following section (general description) will familiarize the permit application technical reviewer/permit writer with an overview of the facility. Additional details regarding the facility are found in other sections of this permit application.

B-1 GENERAL DESCRIPTION [NMHWMR-7, Part IX; 40 CFR 270.14(b)(1)]

B-1a Location [40 CFR 270.14(6)]

Melrose AFR is in east-central New Mexico (Fig. B-1) in Roosevelt and Curry counties. It is approximately 8 miles southwest of the community of Melrose, New Mexico, 30 miles northwest of Portales, and approximately 25 miles west of Cannon AFB. Fig. B-1 is a regional map that shows the general location of Melrose AFR. Fig. B-2 is a vicinity map of east-central New Mexico and shows the locations of the Melrose AFR and Cannon AFB.

The OD unit for which this permit application has been prepared is found in the central portion of the impact area of Melrose AFR (Fig. B-3). The OD unit is used on a routine basis for the treatment of unserviceable, outdated, or damaged military ordnance generated by Cannon AFB. The OD unit is approximately 8500 ft from the nearest (eastern) boundary of the range. Land use within the range is primarily grazing and crop raising (Fig. B-4). Land use surrounding Melrose AFR and nearest the OD unit is similar to that carried out within the range itself.

The USAF owns or leases the property upon which the Melrose AFR is situated. To accommodate faster aircraft using more technically advanced and complex weapons systems, larger and more sophisticated range facilities were needed. As a result, the range was expanded in 1986. An Environmental Impact Statement completed in October 1989 by Science Applications International Corporation reported that the range was expanded from 22,120 to 77,120 acres in 1986, with most of the additional range being located in Roosevelt County. Of the 55,000 acres added to the range, 16,040 acres were obtained from the State of New Mexico, 48 acres from the Bureau of Land Management, and 38,912 acres from private individuals. The USAF purchased outright 27,760 acres (23,280 privately owned acres and 4,480 state-owned acres), thus increasing its total landholdings of the range to 49,880 acres. Of the 27,240 acres of range land not purchased by the USAF, 16,680 acres comprise two categories—15,632 privately owned acres and 48 publicly owned acres—are classified as restrictive easements. This allows the USAF minimal rights to limit use of the property to cattle grazing or gas/oil exploration or extraction. The remaining 11,560 acres consist of land

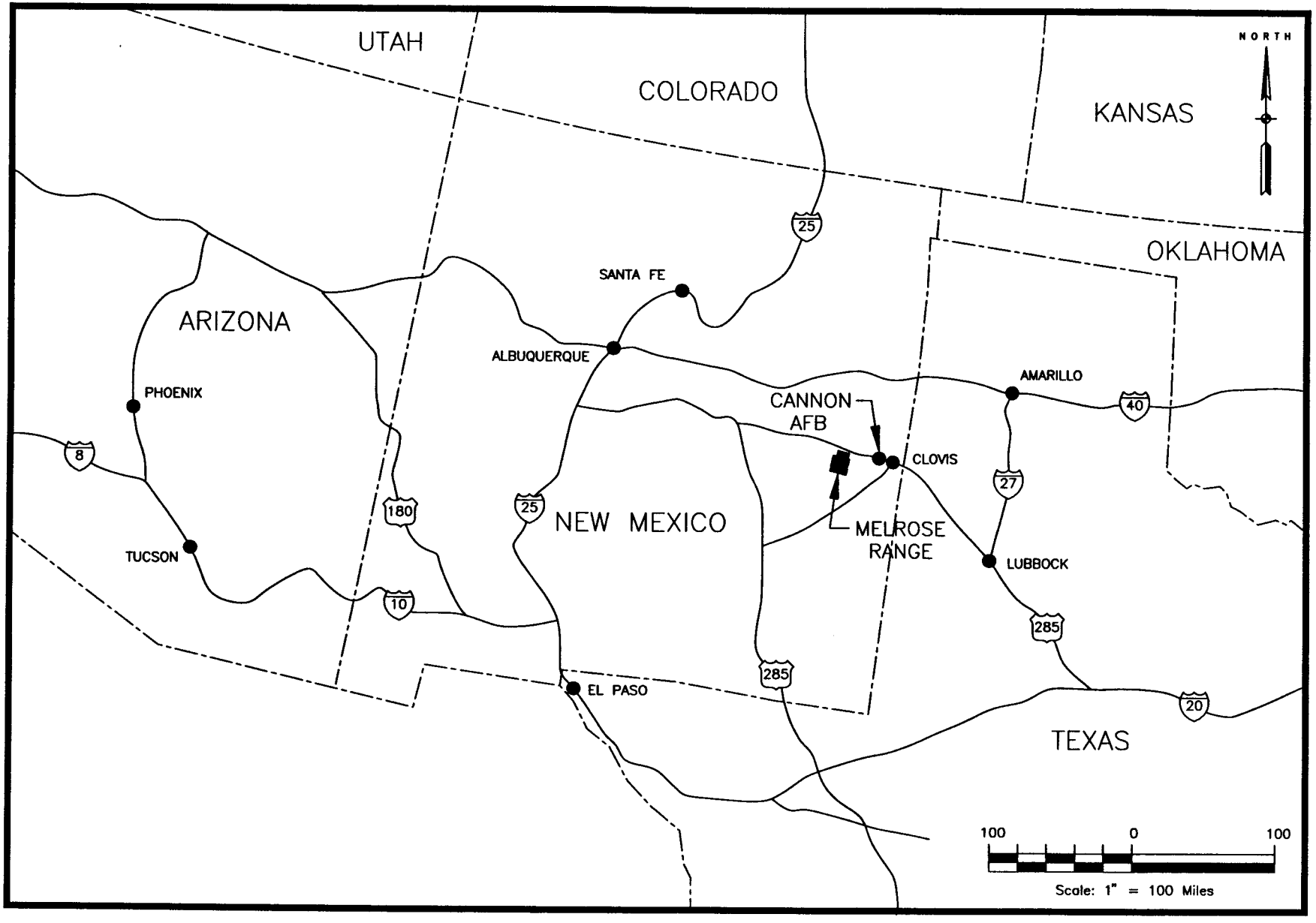

N:\26420512\01\MELROLOC–06/23/93

Figure B-1. Regional Location Map of the Melrose AFR

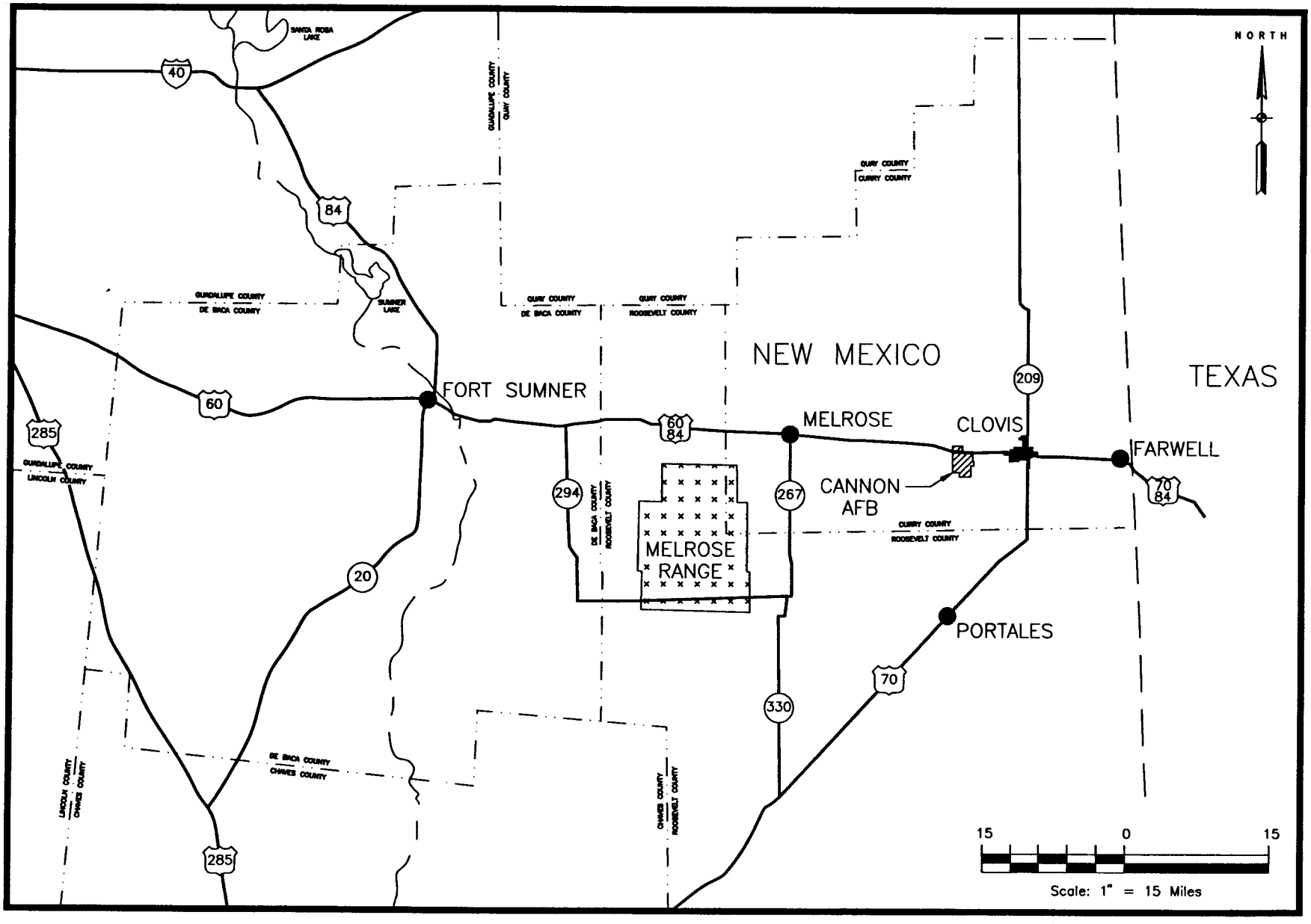

N:\26420512\01\MELROSE-6/23/93

Figure B-2. Vicinity Map of the Melrose AFR and Cannon AFB

TO VIEW THE MAP AND/OR MAPS WITH THIS DOCUMENT, PLEASE CALL THE HAZARDOUS WASTE BUREAU AT 505-476-6000 TO MAKE AN APPOINTMENT

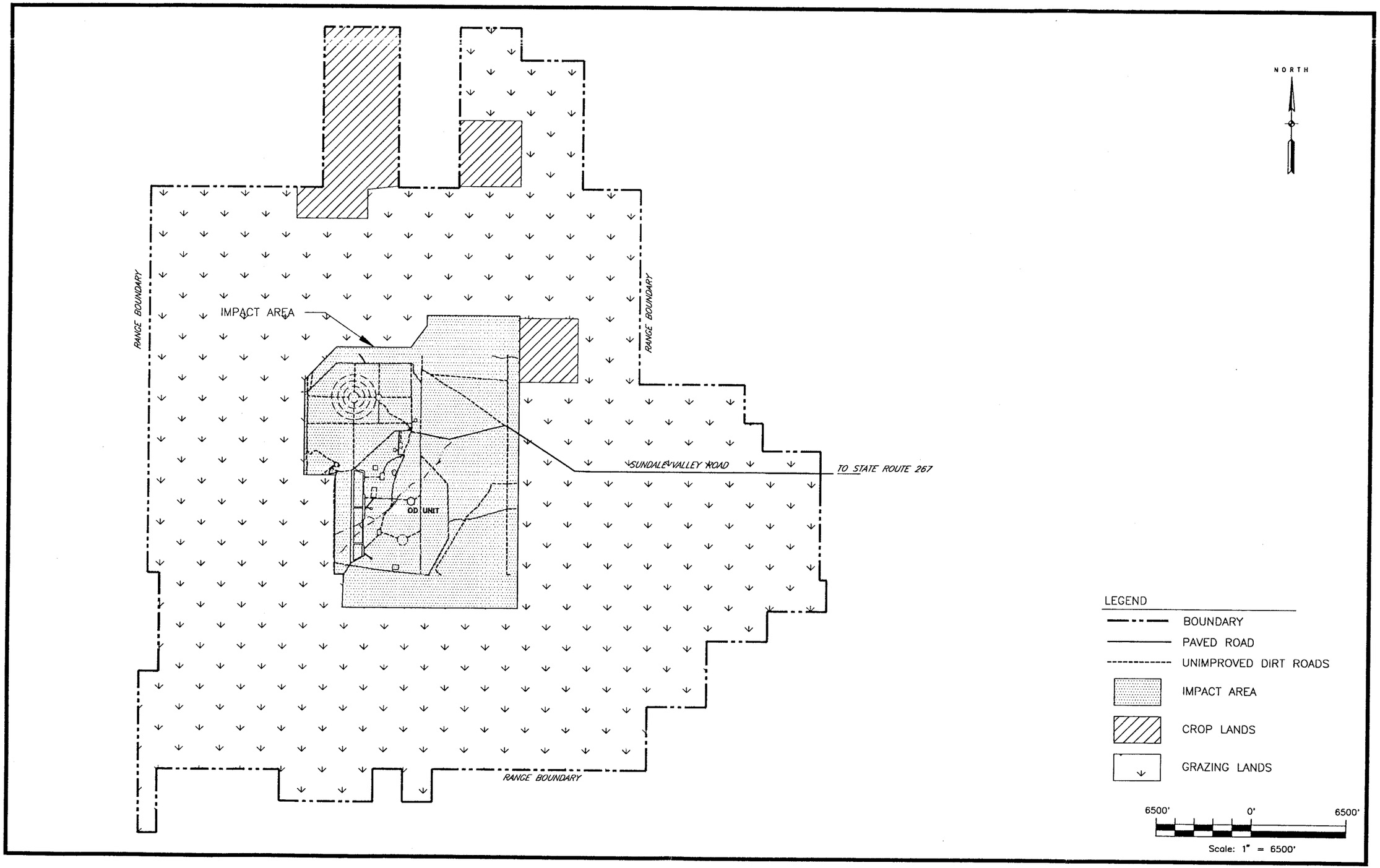

N:\26420512\01\NEWLAND\7-18-93

Figure B-4. Existing Land Use at the Melrose AFR

leased from the state; these lands are then subleased for grazing and agricultural purposes wherever possible.

B-1b History

As part of the USAF's and Cannon AFB's overall mission, the Melrose AFR (historically referred to as Melrose Bombing Range) has been used since 1952 as a bombing and air-to-ground gunnery range. The range was operated until 1987 by the Cannon Base Civil Engineers under the Combat Support Group. During FY 1988, the range was converted to a contract operation. Arcata Associates held the first contract for 5 years and was then replaced by Westar Corporation, the current range operations and maintenance contractor. The range currently provides inert aerial ordnance delivery training for Air Combat Command units. It consists of 3 Television Ordnance Scoring Systems (TOSSs) and 97 TOSS scored targets. These include nuclear, conventional, and tactical type targets. There are also two strafe pits and an airborne drop zone (DZ Melrose) east of the main tower.

The range has never been used as a facility for the research, development, or deployment of nuclear weapons, chemical warfare, or other exotic warfare munitions. Only conventional and practice ordnance have been employed at the Melrose AFR; live ordnance containing high explosives was discontinued in 1969. Ordnance currently used at the impact area, which covers 8,800 acres, is restricted to practice bombs, inert full-scale bombs, inert 2.75-in. rockets, target practice gun ammunition, and .50-caliber and smaller caliber ammunition.

The impact range is used primarily by: F-111F and EF-111 aircraft from the 27 Fighter Wing at Cannon AFB, F-16s from 150th Air National Guard at Kirtland AFB, F-117s and German F-4s from the 49th Fighter Wing at Holloman AFB; B-1B aircraft from the 96th Bomber Wing at Dyess AFB; and MC-130, UH-60G, and MH-53 aircraft from 542nd Combat Training Wing. Other users include Air National Guard units in Texas, Colorado, and other states as well as Bomber Wings from all over the country. Historically, the 27 Fighter Wing has accounted for about 75% to 80% of the range's bombing and gunnery activities.

The current OD facility at the Melrose AFR was originally constructed in May 1974 and operations began in 1980, at about the same time as RCRA regulations were promulgated. Cannon AFB met its obligation to attain RCRA interim status for the operation of the facility when it submitted a Part A RCRA permit application in 1980. Cannon AFB has used the facility continuously since that time for the routine treatment of waste military ordnance generated as part of the Cannon AFB mission.

B-2 TOPOGRAPHIC MAP [NMHWMR-7, Part IX; 40 CFR 270.14(B)(19)(I) AND (VI)]

The Melrose AFR is within the Great Plains Physiographic Province at the west-central portion of the Southern High Plains, which is a broad, gently tilted plain. The Southern High Plains are bounded on the north by the Canadian River, which lies approximately 63 miles north of the range's north boundary. The eastern and western boundaries of the Southern High Plains are bordered by escarpments that rise almost 300 ft above the surrounding area.

There is some topographic relief in the area of the bombing range with ground surface elevations in this area varying from 4710 ft, National Geodetic Vertical Data (NGVD) of 1929, atop the physiographic feature identified as the Mesa near the impact area to around 4190 ft NGVD in the northeast section of the range. In the area of the OD unit, this upland rises more than 200 ft and is approximately 1 mile to the south and west of the unit. This relief is primarily the result of dissection provided by the erosional activity and stream channel development of numerous small intermitant waterways. Figure B-3 is an area topographic map of the portion of the Melrose AFR that includes most of the impact range and the OD unit. This map shows contour lines at 10 ft intervals, surface waters, drainage features, access roads, access control points, and range buildings.

B-2a Land Use [40 CFR 270.14(b)(19)(iv]

The OD unit is in the central portion of Melrose AFR and within the boundaries of the impact range. Land use within and immediately adjacent to the range consists of both improved and unimproved lands. The improved lands consist of the range administrative area. The administrative area, near the center of the impact area, consists of several buildings and other structures, including the Operation Control Center, Fire Department, observation tower, pumphouse, and storage building [see Sect. B.2a(5) for additional description]. The unimproved section of the range consists of acreage for agricultural cropland, firebreaks, roads, grazing land, wildlife habitat, and the impact area.

Crop growing (for forage crops fed to livestock) is largely restricted to the northern section of the range. The USAF plans to convert some of these cropland areas to grasslands over the next five years by systematically seeding them back to native grasses and they are currently working with the state of New Mexico in a land swap for state-owned lands within the bombing range. Limits are set on the amount of land on the installation that can be leased for grazing or cropland, as the cantonment area and certain active range sections are not available for lease. Figure B-4 shows the overall existing land use at the Melrose AFR.

B-2a(1) OD Facility Boundary [40 CFR.270.14(b)(19)(vii)]

The OD unit is completely contained within the Melrose AFR, which has a perimeter fence. There are numerous unimproved dirt roads on the impact range that effectively serve as firebreaks for activities related to both bombing practices and OD operations (Fig. B-3). Along the fence line encircling the OD unit, signs have been posted every 300 ft and identify the area as being a munitions area. The size of the area enclosed by the fence is 12.9 acres. The closest land not under control of the Melrose AFR is approximately 8500 ft east of the OD unit at the east boundary of the range. The only access to the impact area and the OD unit is through a road that has two permanent gates barring any unauthorized entry (Fig. B-3).

B-2a(2) Wind Rose [40 CFR 270.14(19)(v)]

Meteorological data collected from January 1943 to February 1981 at Cannon AFB were used in the preparation of the wind rose illustrated in Fig. B-5. The wind rose is a full circle (360 degrees) and has four cardinal points (north, south, east, and west), reflecting 90 degrees at each quarter. Quarters can be further subdivided into sections of 22.5 degrees each. For example, the wind rose can be read as the top being north (N), with subsequent quadrants (reading in a clockwise fashion) being NNE, NE, and E. To find wind speed and frequency at a given point, for instance from the NNW, view the top and left side of the wind rose to find NNW and move to the inner circles from north showing designations of 27 and 21 knots. At this point, instrument readings indicate that wind speeds from the NNW occur between 21 and 27 knots 1% of the time. Thus as interpreted, the wind rose shows that the greatest frequency of these higher wind speeds are from the NNE and NE at 8.3% and 5.7% of the time, respectively.

B-2a(3) Access Control [40 CFR 270.14(19)(viii)]

The impact range has two permanent gates on the single-road entrance from the east; these gates are locked at all times except during range activities. Entrance to the range must be authorized by the Melrose AFR management contractor, Westar Corporation (in charge of operations and maintenance), and explosive ordnance disposal (EOD) personnel. Once on the Melrose AFR, access to the OD unit and the rest of the impact area is controlled by Westar. No one is permitted to move about within the impact area without proper clearance. Figure B-3 shows all these access control features. The OD unit at the Melrose AFR is completely surrounded by a 5-ft-high, 5-strand barbed wire fence. The OD unit can be accessed through either an east or west gate, both of which remain locked at all times except during munitions treatment operations.

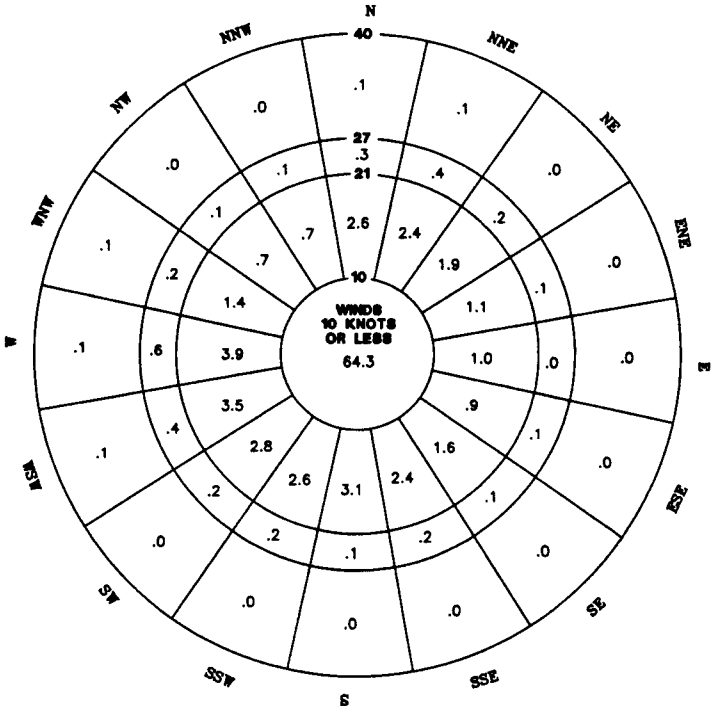

ALL WEATHER

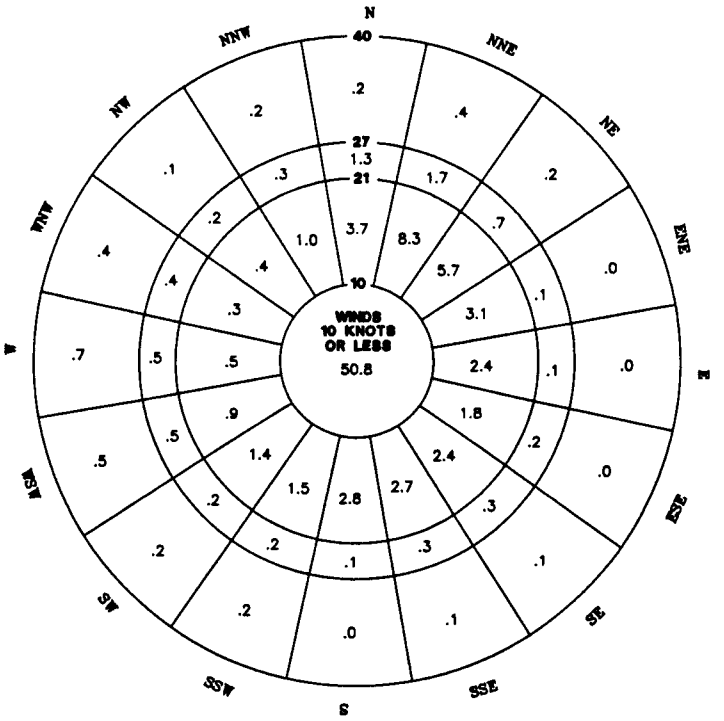

INSTRUMENT

N:\26420512\01\WINDROSE\8-24-93

Figure B-5. Wind Rose

B-2a(4) Injection and Withdrawal Wells [40 CFR 270.14(b)(19)(ix)]

Numerous wells that are used for agricultural purposes are located within the Melrose AFR. Figure B-6 shows the location of all known withdrawal wells on the Melrose AFR, almost all of which are irrigation and livestock wells licensed by the state engineer. One of these wells is approximately 9800 ft south-southwest of the OD area. Wells within a declared basin must be licensed and drilled by a state-permitted driller.

One potable water well is located on the Melrose AFR, estimated to be 10,500 ft due north of the OD unit and approximately 0.5 miles from the operations control center. This well is the only one that services the Melrose AFR compound and fire station. The well is approximately 185 ft deep, with a yield of approximately 11.2 gal per minute (gpm) of water. Water from the well is pumped to a large 25,000-gal fiberglass holding tank located 100 ft south of the control center and is used primarily for emergencies.

B-2a(5) Buildings, Treatment, Storage, Disposal Areas, and Other Structures [40 CFR 270.14(b)(19)(x)]

The structures associated with Melrose AFR are:

- the main range Operation Control Center,
- fire department,
- two observation towers (main tower and north tower) used for tracking practice bombing,
- wash rack,
- pumphouse,
- small storage building, and
- FSQ-T-22 emitter and support building on the west Mesa.

B-2a(6) Recreation Areas [40 CFR 270.14(b)(19)(x)]

There are no parks, playgrounds, or other recreational facilities located within the Melrose AFR or within 1000 ft of the OD unit.

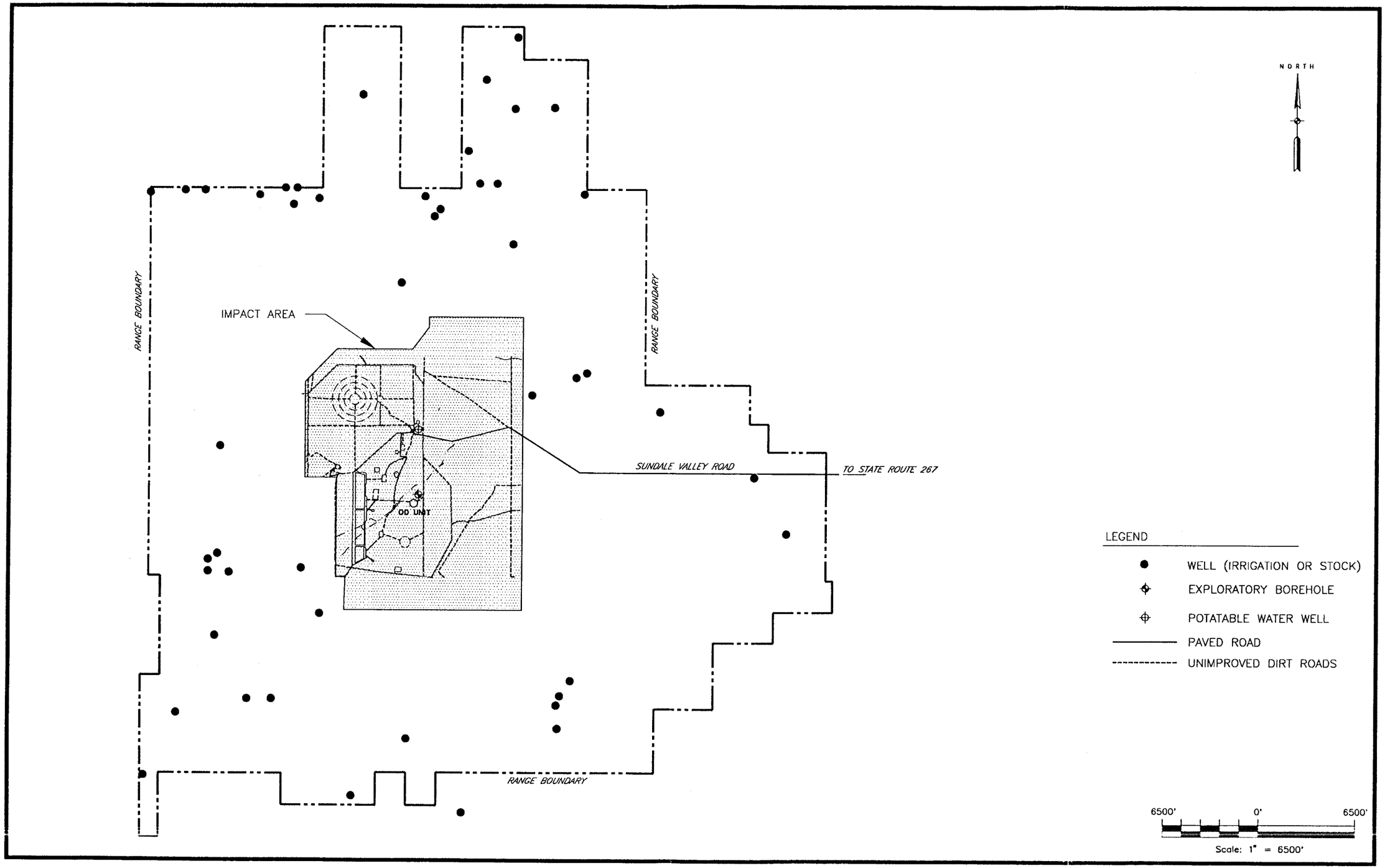

N:\26420512\01\NEWLAND\7-18-93

Figure B-6. Location Map for Wells at the Melrose AFR.

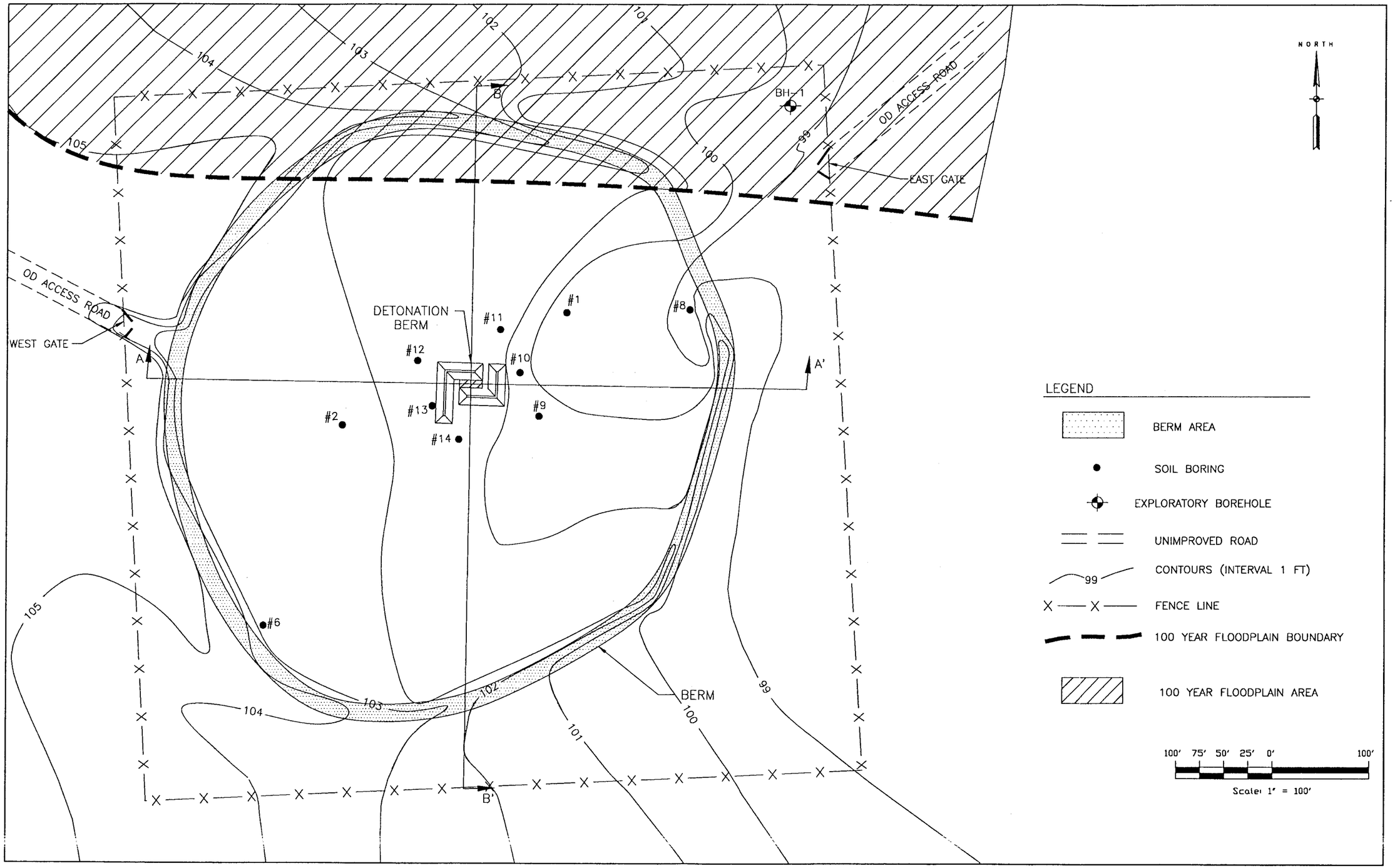

N:\26420512\01\BERMDESN\9-8-93

Figure B-7. Open Detonation Unit

B-2a(7) Runoff Control System [40 CFR 270.14(b)(19)(x)]

For the OD unit, runoff will be controlled by the design of the OD facility. The OD unit will be encircled by an outer earthen berm that will contain or absorb any surface waters that result from occasional rainfall or snow that flow across the OD area and which is designed to divert a 100 yr 24-hour storm event. This outer berm is essentially circular and is approximately 600 feet in diameter. The detonation unit is also surrounded by earthen berms and will be located in the center of the circular, cleared area. This structure will be designed to direct water away from the location where waste munitions are detonated. Refer to section D for complete design details. Thus, any potential waste constituents that might be transported by surface waters will be confined to the immediate (i.e., within the bermed area) vicinity of the OD area.

B-2a(8) Storm, Sanitary, and Process Sewers [40 CFR 270.14(b)(19)(x)]

No storm or sanitary sewers are near the OD unit. However, a septic tank with an associated drainfield system is used for the disposal of domestic wastes at the range operations control center and is approximately 6000 ft north of the OD unit perimeter fence. No process sewers are within the Melrose AFR.

B-2a(9) Loading and Unloading Areas [40 CFR 270.14(b)(19)(x)]

The designated loading area on Cannon AFB is at the Munition Storage Facility (MSA). Building 2112 is the control building for this highly secured area and pick-ups are accomplished from the several munitions bunkers within the MSA. Off-loading is near the center of the OD unit at the Melrose AFR unless an emergency situation requires off-loading elsewhere (in transport, at the MSA, etc.)

B-2a(10) Fire Control Facilities [40 CFR 270.14(b)(19)(x)]

The potable water well and the large holding tank near the range operation control center are used in emergency situations for providing water necessary for controlling fires that may occur at the range. There are also numerous portable water tanks (referred to as "water buffalos") scattered around the range which can also be used during emergencies. Numerous unimproved dirt roads, which also serve as firebreaks, run on all sides of the OD unit. Cannon AFB maintains an on-site range fire department at the control center that remains on standby during all OD operations. In addition, vehicle-mounted fire extinguishers are brought to the OD area by EOD personnel during all treatment operations.

All range fires are reported to Environmental Management Flight (CEV) Natural Resource Manager and Civil Engineering/Real Property Flight (CER) Real Property Records.

B-2a(11) Surface Waters [40 CFR 270.14(b)(19)(ii) and (iii)]

The Southern High Plains in which the Melrose AFR is located are characterized by a semiarid, continental climate, resulting in few streams that flow year round. The upland area to the southwest of the OD unit (the Mesa) is drained by unnamed intermittent streams or draws that flow to the northeast and appear to have no immediate outlet channel. Two of these intermittent streams converge approximately 3400 ft southwest of the perimeter fence of the OD unit, and the resultant single intermittent stream flows within 700 to 800 ft north of the OD area. Although the Southern High Plains are known for their numerous playas, none are of significant size within at least 3 miles of the OD facility. Figure B-3 shows surface waters and drainage in the impact range area.

B-2a(12) Flood Control/Drainage Barriers [40 CFR 270.14(b)(19)(xi)]

The OD detonation structure will be positioned near the center of the OD unit. An exterior berm (see Fig. B-7) surrounding the OD unit which will be covered with a protective geotextile membrane will be sufficient to provide adequate protection from flooding that may occur, including a 100-year flood event. In addition, as constructed the OD detonation structure will include a sloping surface (2% grade) that prevents precipitation from collecting within the structure. Please refer to Sect. D for complete design details of the OD unit, including dimensions and heights of all berms.

B-3 LOCATION STANDARDS (NMHWMR-7, Part V; 40 CFR 264.18)

The OD unit is within the boundaries of the Melrose AFR. The range is approximately at latitude 34° 16' 43" N and longitude 103° 47' 23" W. The Melrose AFR and the OD unit are existing facilities, are not located in a listed seismic zone, and are not subject to seismic regulations.

B-3a Seismic Considerations [40 CFR 264.18(a)]

Melrose AFR is in Roosevelt and Curry counties, New Mexico, which are not listed in Appendix VI of 40 CFR 264 as political jurisdictions that must demonstrate compliance with seismic standards specified in 40 CFR 264.18(a).

B-3b Floodplain Standard [40 CFR 264.18(b)]

The U.S. Geological Survey (USGS) determined by floodplain analysis that the OD area lies partially within the boundaries of the 100-year floodplain of the unnamed draw (or arroyo) that flows north and is approximately 700 to 800 ft away from the unit. The 100-year peak discharge was calculated by the U.S. Soil Conservation Services's unit hydrograph method, also known as the Soil Conservation Service (SCS) TR-20 computer program. Details of this floodplain analysis are presented in Appendix B1-1, Floodplain Study, OB/OD Unit, Melrose AFR. The map shown in Fig.

B1-2 of Appendix B also clearly indicates that the northern portion of the OD area is traversed by encroachment of the 100-year flood boundary.

The OD facility will be designed, constructed, operated, and maintained to prevent washout due to a 100-year flood. To prevent a washout from such an event, the existing berm around the OD unit must, according to the recommendations of the USGS floodplain study, be raised about 1 ft to contain the 100-year discharge. Details on how the unit will be operated and maintained are presented in Section D.

B-4 TRAFFIC INFORMATION [NMHWMR-7, Part IX; 40 CFR 270.14(b)(10)]

Traffic routes to and from the OD unit is limited to one of two roads approached from the east or the west as shown on Fig. B-3. The Melrose AFR can be accessed from U.S. Highway Route 60/84 by turning south on State Route 267 (east of Melrose, New Mexico) and then turning west on Sundale Valley Road. Traffic must pass through two controlled access gates to reach the impact range.

Traffic volumes to and from the range area, including the OD unit, are generally very light. Outdated and/or excessed munitions are transported to the OD unit on the average of only once every 2 months. These shipments are generally 15 to 20 pounds and are transported by pickup or 1.5-ton truck, either gasoline or diesel powered, and in all cases meet the requirements for vehicles carrying explosives for demilitarization.

B-4a Traffic Control [40 CFR 270.14(b)(10)]

Traffic control at the OD unit is maintained by locked and posted gates. Warning signs stating "DANGER – MUNITIONS AREA UNAUTHORIZED PERSONNEL KEEP OUT" are posted every 300 ft around the perimeter fence of the OD unit (Fig. B-3). Observance of the red flag denoting treatment operations in progress is utilized, and all personnel entering the area receive hand-held, two-way radios for emergency communication. The flag is flown at the operations center to inform everyone that treatment operations are in progress. Speed limit signs of 45 mph are posted on the road to the range. The designated speed limit in the impact area is 30 mph.

B-4b Access Road Surfacing [40 CFR 270.14(b)(10)]

The USAF manual for roads presents a four-level classification scheme. Definitions for these different classes are paraphrased below. The first four road classes are the same as those employed by the American Association of State Highway and Transportation Officials (adopted by the USAF).

- **Primary**. Primary roads include all installation highways serving as main distribution arteries for traffic originating within and outside an installation and provide access to, through, and between various functional areas. Primary roads are paved.

- **Secondary**. Secondary roads include all installation roads supplementing the primary highway system by providing access to, between, and within the various functional areas. Secondary roads can have a paved or graded soil surface.

- **Tertiary.** Tertiary roads include all installation roads providing access from other roads to individual units or locations within the various functional areas. Tertiary roads have a graded soil surface.

- **Patrol.** Patrol roads normally include all installation roads planned and designed for use in surveillance or in patrolling areas for security purposes and may be paved or graded soil.

All access roads to the Melrose AFR are asphalt-surfaced, generally with 1.5 to 2 in. of hot mix asphaltic concrete. Approximately 1 mile of dirt covered road (secondary unimproved road) runs between the range offices at the operations control center and the OD unit. This road is routinely maintained with annual grading by the range contractor, Westar Corporation.

B-4c Load Bearing Capacity [40 CFR 270.14(b)(10)]

All access routes leading to the Melrose AFR are capable of handling pickup or 1.5 ton trucks carrying unexploded ordnance for treatment at the OD unit. The dirt road leading to the OD area has been used for several years by various vehicles and has not suffered any apparent damage from traffic. Therefore, the loading capacity of these secondary roads should be sufficient to safely transport future shipments of unexploded munitions to the OD area. The amount of waste transported per vehicle varies depending on the particular ordnance items destined for treatment, but gross vehicle weight which will be a maximum of 8 tons, will not be exceeded under any circumstances.

B-4d Traffic Control Signals [40 CFR 270.14(b)(10)]

The only traffic control signals going to the Melrose AFR from Cannon AFB, where transport of military munitions originate, are stop signs at the Base entrance and at the intersection of Ranchvale Road with U.S. Highway 60/84. No traffic control signals are present with in the Melrose AFR area itself.

C. WASTE CHARACTERISTICS

This section describes the hazardous wastes to be treated at the OD unit at the Melrose AFR and also presents the procedures that will ensure proper waste identification. The following information is provided in accordance with the requirements of NMHWMR-7, Parts V and IX, and 40 CFR 264 and 270.14(b)(2).

C-1 CHEMICAL AND PHYSICAL ANALYSES [NMHWMR-7, Parts V and IX; 40 CFR 264.13(a) and 270.14(b)(2)]

Due to the presence of trace amounts of toxic metals, wastes to be treated at the Melrose AFR OD unit will generally be hazardous by virtue of their exhibition of the characteristic of reactivity and, to a lesser degree, by their toxicity. The wastes to be treated are physically intact explosive ordnance items that include a wide variety of small unserviceable munitions items and unexploded (dud fired) practice bombs. Although it is possible that some off-specification ordnance may be treated at the OD unit, the chemical components should be consistent with the data presented in this section. Table C-1 presents a list of the basic compositions of those energetic materials that are in general use today as part of the overall Cannon AFB mission.

The reactive munitions demilitarized by OD methods generally consist of an assortment of explosive chemical fill materials, along with associated metal casings (brass, aluminum, and steel), projectiles, and primer components. Metal components make up the majority of the total mass of the munitions, and reactive/explosive materials are usually less than 20% of the gross munitions weight.

A number of reactive compounds are present in munitions. These compounds fall into four general classes: propellants, pyrotechnic compositions, priming compositions, and high explosives. Propellants, pyrotechnic compositions, and primers react by burning, exhibiting great heat generation and light intensity. High explosives reactions are exhibited in the form of detonations. The physical and chemical properties of several component compounds characteristic of these types of munitions are listed in Table C-2.

When these munitions are treated in an OD unit, various combustion and detonation products are formed. These combustion products are no longer reactive but may result in some impact to environmental media. Tables C1-1, C1-2, and C1-3 in Appendix C list components and resulting combustion by-products of some of the more typical ordnance treated at the OD unit. Sect. E addresses these impacts in greater detail. Due to the nature of these reactions, the primary products released during treatment are gaseous in nature. In addition, groundwater and soil contamination may occur. The Sampling and Analysis Plan outlines procedures to study these pathways.

Table C-1. Waste analysis data: basic explosive compositions

Type of waste	Constituents	General or typical concentration or amount	Comment
Propellant (single base—exact composition varies by use and types)	Nitrocellulose	52% to 98%	$C_3H_5N_3O_9$
	Nitroglycerin	2% to 43%	
		Traces of other chemicals to retard burn	
Propellant (20-mm, 30-mm, 40-mm target practice)	Nitrocellulose/nitroglycerin	75%	
	Charcoal	12.5%	
	Sulfur	12.5%	
	Graphite	Trace	
Black powder	Potassium (or sodium) nitrate	75%	$K(Na)NO_3$
	Charcoal	15%	
	Sulfur	10%	
Primer Components	Potassium chlorate	53%	High temperature percussion primers
	Antimony trisulfide	25% to 30%	
	Calcium silicide	12% to 17%	
	Lead azide	20%	Stab detonators
	Basic lead styphnate	40% to 60%	
	Tetracene	5%	
	Barium nitrate	20% to 25%	
	Antimony sulfide	10% to 15%	
	Powdered aluminum	10%	
	Potassium chlorate	8.5% to 66.7%	Electronic Primer
	Lead mononitroresorcinate	76.5%	
	Nitrocellulose	15%	
	Lead thiocyanate	45%	
	DDNP	20% to 75%	
	Charcoal	15%	
	Nitrostarch	5%	
	Titanium	33.3%	
	Aluminum	33.3%	
Illumination mixture	Sodium nitrate	36% to 40%	
	Magnesium	53% to 56%	
	Polymeric binder	4% to 8%	
Tetryl	Trinitrophenylmethylnitramine		$C_7H_5N_5O_8$
PETN	Pentaerythritol tetranitrate		$C_5H_8N_4O_{12}$
TNT	Trinitrotoluene		$C_7H_5N_3O_6$
RDX	Cyclotrimethylenetrinitrimine		$C_3H_6N_6O_6$

Table C-1 (continued)

Type of waste	Constituents	General or typical concentration or amount	Comment
C-4	RDX	91%	
	Polyisobutylene	2%	
	Binder	7%	
Incendiary mix	Ammonium perchlorate	35%	NH_4ClO_4
	Aluminum	52%	
	Calcium stearate	1.9%	$Ca(C_{18}H_{35}O_2)_2$
	Other	9.7%	
PBX	RDX, HMX, HNS, or PETN with polymeric binder (polyester, polyurethane, nylon, polystyrene, etc.)	91% to 94% 6% to 9%	

Tetryl = trinitrophenylmethylnitramine
PETN = pentaerythritol tetranitrate
TNT = trinitrotoluene
RDX = cyclotrimethylenetrinitramine
PBX = plastic bonded explosives
DDNP = diazodinitrophenol
HMX = cyclotetramethylenetetranitramine
HNS = hexanitrostilbene

Table C-2. Physical and chemical properties of common energetic materials

Explosive	Composition or chemical formula	Molecular weight	Density (g/cc)	Physical state/appearance	Solubility	Activation energy (Kcal/mole)[a]	Hazard/toxicity
Primary explosives							
Lead azide	N=28.8% Pb=71.2%	291	4.68	Colorless, crystalline (very sensitive needles)	Soluable in water at 20°C, 0.05%	23.74	Severe explosion risk; highly toxic; avoid inhalation; TLV[b] (as PB) is 0.15 mg/m^3 in air
Lead styphnate	C=15.4% H=0.6% N=9.0% O=30.8% Pb=44.2%	706	3.02	Yellow orange or reddish brown, rhombic needles	Practically insoluble in water	75.39	Detonates at 260°C; dangerous explosion risk; an initiating explosive
Tetracene	C=12.8% H=4.3% N=74.4% O=8.5%	188	1.35	Colorless to pale yellow, fluffy material with needle crystals	Practically insoluble in water and ethanol; insoluble in ether, benzene, acetone, carbon tetrachloride, and ethylene dichloride	NA	Explodes when shocked, reacts with oxidizing materials
Booster and secondary explosives							
Nitrocellulose	C=26.46% H=2.78% N=12.60% O=58.16%	272	1.66	Pulp, cotton-like, amorphous solid (dry); colorless liquid to semi-solid (solution)	High-nitrogen forms soluble in acetone, insoluble in ether-alcohol mixture; low-N is soluble in ether-alcohol mix and acetone; insoluble in water	NA	Flammable, dangerous fire and explosion risk; tests have shown no toxicity to mammals (rats and dogs)
Nitroglycerin	C=15.9% H=2.2% N=18.5% O=63.4%	227	1.609	Pale yellow to clear, colorless viscous/oily liquid; odorless; has sweet, burning taste	Slightly soluble in water; soluble in alcohol and ether	41.5	Severe explosion risk; highly sensitive to shock and heat; toxic by ingestion, inhalation, and skin absorption; TLV is 0.05 ppm in air

Table C-2. (continued)

Explosive	Composition or chemical formula	Molecular weight	Density (g/cc)	Physical state/appearance	Solubility	Activation energy (Kcal/mole)[a]	Hazard/toxicity
PETN	C=19.0% H=2.5% N=17.7% O=60.8%	316	1.75	White, crystalline material	Very soluble in acetone; slightly soluble in alcohol and ether; insoluble in water	47	Due to its insolubility in water and the fact that it is usually handled wet, cannot be absorbed through skin and inhalation of dust improbable; Shock-sensitive explosive; detonates at 210° C
HMX	C=16.2% H=2.7% N=37.9% O=43.2%	296	1.905	White, crystalline solid; has four polymorphs: alpha, beta, gamma, and delta	Insoluble in water, slight solubility in various solvents	52.7	High explosive; toxic by inhalation and skin contact
RDX	C=16.3% H=2.7% N=37.8 O=43.2%	222	1.82	White, crystalline solid; form varies according to precipitation process, may be needles, plates, or crystals	Insoluble in water, alcohol, carbon tetrachloride, and carbon disulfide; slightly soluble in methanol and ether	47.5	High explosive, easily initiated by mercury fulminate; toxic by inhalation and skin contact; TLV is 1.5 mg/m^3 of air
Nitroguanidine	C=11.5% H=3.9% N=53.8% O=30.8%	104	1.72	Exists in two forms, α and β: (1) long, thin, flat, flexible lustrous needles; (2) small, thin, elongated plates	β form is more soluble in water	NA	May explode when shocked or heated
Tetryl	C=29.3% H=1.7% N=24.4% O=44.6%	287	1.73	Yellow crystals	Insoluble in water; soluble in alcohol, ether, benzene, glacial acetic acid	34.9	Dangerous fire and explosion risk; moderately toxic by inhalation or ingestion; skin irritant, can cause dermatitis; inhalation of tetryl dust has recognized toxic effects; TLV is 1.5 mg/m^3 of air

Table C-2. (continued)

Explosive	Composition or chemical formula	Molecular weight	Density (g/cc)	Physical state/appearance	Solubility	Activation energy (Kcal/mole)[a]	Hazard/toxicity
HNS	Prepared from 2,4,6-trinitrobenzyl chloride	450	1.72	Yellow crystals	Soluble in dimethyl formamide and slightly soluble in hot acetone, methyl ethyl ketone, and glacial acetic acid	NA	High explosive (less sensitive to impact than tetryl)
TNT	C=37.0% H=2.2% N=18.5% O=42.3%	227	1.65	Yellow, monoclinic needles	Soluble in alcohol and ether; insoluble in water	34.4	Flammable, dangerous fire risk, moderate explosion risk; will detonate only if vigorously shocked or heated; toxic by ingestion, inhalation, or skin absorption; TLV is 0.5 mg/m^3 of air
Composition B	RDX=60% TNT=40% Wax=1%	224	1.65	White to yellow crystalline solid	Insoluble in water	NA	High explosive; toxic by inhalation and skin contact; TLV is 1.5 mg/m^3 of air

Table C-2. (continued)

Explosive	Composition or chemical formula	Molecular weight	Density (g/cc)	Physical state/appearance	Solubility	Activation energy (Kcal/mole)[a]	Hazard/toxicity
Propellants							
Barium nitrate	$Ba(NO_3)_2$	261	3.24	White to yellowish, crystalline powder	Soluble in alcohol and water	NA	Strong oxidizing agent; flammable (pyrophoric) at room temperature in powder form; TLV is 0.5 mg/m^3
Potassium sulfate	K_2SO_4	174	2.66	Colorless or white, hard crystals or powder; bitter saline taste	Soluble in water; insoluble in alcohol	NA	No hazards cited in referenced literature
Potassium nitrate	KNO_3	101	2.10	Transparent, colorless or white, crystalline powder or crystals; slightly hygroscopic; pungent, saline taste	Soluble in water and glycerol; slightly soluble in alcohol	NA	Dangerous fire and explosion risk when shocked or heated, or in contact with organic materials; strong oxidizing agent
Ethyl centralite	Nitrated by-products of nitrocellulose decomposition	268	1.12	White, crystalline solid; peppery odor	Insoluble in water; soluble in organic solvents	NA	
Pyrotechnics							
Strontium nitrate	$Sr(NO_3)_2$	212	2.98	White powder	Soluble in water; slightly soluble in absolute alcohol	NA	Strong oxidizing agent; fire risk in contact with organic materials; may explode when shocked or heated
Potassium perchlorate	$KClO_4$	139	2.52	Colorless crystals or white, crystalline powder; decomposed by concussion, organic matter, and agents subject to oxidation	Soluble in water; insoluble in alcohol	NA	Fire risk in contact with organic materials; strong oxidizing agent; strong irritant

Table C-2. (continued)

Explosive	Composition or chemical formula	Molecular weight	Density (g/cc)	Physical state/appearance	Solubility	Activation energy (Kcal/mole)[a]	Hazard/toxicity
Black powder	KNO_4=74% S=10.4% Charcoal=15.6%	84	Variable	Powder or granulated	NA	NA	Moderately toxic by inhalation and ingestion

[a]Activation energy is the minimum energy to be acquired for a molecule before it can be regarded as being activated. Activation is the process of treating a substance molecule, or atom by heat or radiation (i.e., supplying energy such as an electrical or thermal ignition source) to the degree where the substance, molecule, or atom attains the necessary energy level for the occurrence of a chemical reaction, such as detonation.

[b]TLVs, or Threshold Limit Values, are standards established by the American Conference of Governmental Industrial Hygienists for concentrations of airborne substances found in the workplace. They are time-weighted averages derived from conditions that workers are likely to be exposed to day after day without adverse effects. They are intended to serve as guidance numbers for monitoring and controlling health hazards.

PETN = Pentaerythritol tetranitrate
HMX = Cyclotetramethylenetetranitramine
RDX = Cyclotrimethylenetrinitramine
HNS = Hexanitrostilbene
NA = Not Available (Information was unavailable from sources cited in this permit application.)
TLV = Threshold Limit Value
TNT = Trinitrotoluene

The propellant mixtures are typically classified as single- or double-based. Single-based propellants are composed mainly of nitrocellulose, while double-based propellants are mixtures of nitrocellulose and nitroglycerin. A number of miscellaneous chemical compounds are added to the propellant charge to control deflagration characteristics or to promote stability during storage. These additives include various nitrated organic compounds, petrolatum, metals, and metal salts. The additives incorporated into the propellant fuels generally account for 3% of the mixture and are oxidized during the deflagration reaction. For this reason, they are of minor consequence relative to their impact on the environment. All components of military propellants are in solid form and contain no free liquids.

Pyrotechnic compositions are mixtures of compounds designed to emit smoke and/or light. These munitions consist primarily of a mixture of fuel and oxidizing compounds. The fuels are usually metal powders, such as Mg, Al, Ti, or Zr powder. Typical oxidizers consist of metal nitrates, ammonium, or metal perchlorates, chlorates, and peroxides. Secondary constituents also present in pyrotechnic mixtures are binders, ignition agents, retardants, and colorants. A variety of chemical compounds are present in these additives. Typical minor components include black powder, chlorinated organics, waxes, sugar, asphalt, polyvinyl chloride, and vegetable oils. Military pyrotechnic compositions contain no free liquids. The thermal treatment of these devices generates gaseous combustion products and solid particulates.

Priming compositions are mixtures that are very sensitive to shock or friction and are used to provide a source of ignition for pyrotechnics, propellants, or explosives. Primers are a mixture of fuel, oxidizer, and explosive compounds. Typical fuels are antimony sulfide and lead thiocyanate; oxidizers include barium nitrate and potassium nitrate. The primary explosives are lead azide and lead styphnate.

High explosives are typically nitrated organic materials that generate large quantities of gaseous reaction products as a result of detonation. The most common high explosives are trinitrotoluene (TNT), cyclotrimethylenetrinitramine (RDX), trinitrophenylmethylnitramine (tetryl), cyclotetramethylenetetranitramine (HMX), and various combinations of these compounds. High explosive ordnance may have waxes or aluminum powder as additives. All constituents are in solid form.

A representative list of ordnance types to be demilitarized and their reactive contents, usually expressed as net explosive weight (NEW) is given in Table C-3. Obsolete and off-specification items should have the same characteristics as currently acceptable items. Explosive content by weight and type may vary by model. Cannon AFB plans to treat by OD approximately 8,000 lb NEW maximum of waste ordnance each year at the OD unit. The volume of residue remaining after an OD episode varies according to the type and amount of explosive being treated. For example, some munitions

Table C-3. Waste analysis data: typical ordnance to be open-burned/open-detonated.

Type of waste	Constituents		General or typical concentration or amount
	Major Reactant(s)	Major inert (casings)	NEW (lbs.)
Actuator, deployment	Single-based	Steel	0.0110
Adapter, ADU-449/B	Single-based	Steel	0.0083
Adapter, booster nose	Tetryl	Steel	0.3900
Adapter, booster tail	Tetryl	Steel	0.8800
Assembly, explosive transfer	Tetryl	Steel	0.1300
Assembly, initator	Single-based	Steel	1.00
Blasting cap	PETN/Tetryl	Aluminum	0.0019
Block, demolition	TNT	Paper & Tin	2.0
Cartridge, 12 gauge	Single-based	Paper, Plastic, & Steel	0.0038
Cartridge, 22 LR	Single-based	Brass, Copper, & Steel	0.0003
Cartridge, .30 caliber	Single-based	Steel & Aluminum	0.0018
Cartridge, 30mm HEI	RDX/Incendiary mix	Steel & Aluminum	0.0916
Cartridge, 30mm TP	Target practice propellant	Steel & Aluminum	0.3308
Cartridge, .38 caliber	Single-based	Brass, Copper, & Steel	0.0008
Cartridge, 40mm M674	Single-based	Steel & Aluminum	0.2156
Cartridge, 40mm HE	RDX/TNT	Steel & Aluminum	0.0780
Cartridge, 40mm practice	Single-based	Steel & Aluminum	0.0008
Cartridge, 40mm smoke	Single-based	Steel & Aluminum	0.1722
Cartridge, .45 caliber	Single-based	Brass, Copper, & Steel	0.0008
Cartridge, .50 Cal ball	Single-based	Brass & Lead	0.0342
Cartridge, .50 Cal blank	Black powder	Brass	0.0243
Cartridge, 5.56mm ball	Single-based	Brass, Copper, & Steel	0.0041
Cartridge, 5.56mm blank	Black powder	Brass	0.0011
Cartridge, 7.62mm ball	Single-based	Brass, Copper, & Steel	0.0067
Cartridge, 9mm ball	Single-based	Brass, Copper, & Steel	0.0009
Cartridge, aircraft, M3A1	Single-based	Aluminum	0.4500
Cartridge, delay	Single-based	Aluminum	0.0140
Cartridge, impulse	Single-based	Aluminum	0.0208
Cartridge, signal MK4	Black powder	Aluminum	0.0602

Table C-3. Waste analysis data: typical ordnance suitable for open-detonation.

Type of waste	Constituents		General or typical concentration or amount NEW (lbs.)	Method: AFR TO Reference Disposal Paragraph[a]
	Major Reactant(s)	Major inert (casings)		
Adapter, ADU-449/B	Single-based	Steel	0.0083	OD: No reference
Adapter, booster nose	Tetryl	Steel	0.3900	OD: No reference
Adapter, booster tail	Tetryl	Steel	0.8800	OD: No reference
Assembly, explosive transfer, 188-1-5	Tetryl	Steel	0.1300	OD: 9-31
Assembly, initiator	Single-based	Steel	1.00	OD: 6-29, 9-31
Blasting cap	PETN/Tetryl	Aluminum	0.0019	OD: 6-7
Block, demolition	TNT	Paper and Tin	2.0	OD: 6-29
Cartridge, 30mm HEI	RDX/Incendiary mix	Steel and Aluminum	0.0916	OD: 6-9
Cartridge, 40mm M674	Single-based	Steel and Aluminum	0.2156	OD: 6-9
Cartridge, 40mm HE	RDX/TNT	Steel and Aluminum	0.0780	OD: 6-8
Cartridge, 40mm practice	Single-based	Steel and Aluminum	0.0008	OB: 3-6; OD: 6-9
Cartridge, 40mm smoke	Single-based	Steel and Aluminum	0.1722	OB: 3-6; OD: 6-9
Catapult, rocket, CKU-5A/A	Single-based	Aluminum	5.500	OD: No reference
Charge, demo, C-4	RDX, Polyisobutylene	Plastic	30.0	OD: 6-29
Charge, shaped, C-4	RDX, Polyisobutylene	Steel	0.8300	OD: 6-29
Charge, spotting, CXU-3A/B	Black powder phosphorus	Aluminum	0.0830	OD: 6-39
Cluster, MK20 Mod 3, Rockeye	Tetryl/RDX	Aluminum	100.0	OD: 6-24

Table C-3 (continued)

Type of waste	Constituents		General or typical concentration or amount NEW (lbs.)	Method: AFR TO Reference Disposal Paragraph[a]
	Major Reactant(s)	Major inert (casings)		
Cord, detonation	PETN/RDX	Plastic	0.0070	OB: 3-6; OD: 6-40
Detonator, electric	RDX	Steel	0.0003	OB: 3-6; OD: 6-7
Explosive scent, K-9	Tetryl/RDX	None	8.0	OD: No reference
Fuze, blasting	Tetryl/RDX	Plastic	0.0070	OD: No reference
Fuze, bomb nose	Tetryl/RDX	Aluminum and Steel	0.1640	OD: No reference
Fuze, bomb tail	Tetryl/RDX	Aluminum and Steel	0.0150	OD: No reference
Fuze, delay, M9	Tetryl/RDX	Aluminum	0.0002	OD: No reference
Fuze, extension, M1A1	Tetryl/RDX	Steel	2.00	OD: No reference
Fuze, FMU-130/B	Tetryl/RDX	Aluminum, Steel, and Plastic	0.3600	OD: No reference
Fuze, FMU-139A/B	Tetryl/RDX	Aluminum, Steel, and Plastic	0.2778	OD: 6-33
Fuze, FMU-54A/B	Tetryl/RDX	Aluminum and Steel	0.3600	OD: 6-33
Fuze, MK339	Tetryl/RDX	Aluminum and Steel	0.0006	OD: 6-33
Fuze, practice M228	Tetryl/RDX	Aluminum and Steel	0.0030	OD: No reference
Rocket motor	Black powder	Tin	1.100	OB/OD: 8-5 to 8-15; 9-31
Signal kit, A/P25-S-1	Single-based	Tin	0.0812	OD: 6-8; 6-41
Signal kit, A/P25-S-2	Single-based	Tin	0.0812	OD: 6-8; 6-41
Simulator, projectile, air burst, M27 or M74	Black powder	Paper and Plastic	0.0825	OD: 6-41

Table C-3 (continued)

Type of waste	Constituents		General or typical concentration or amount NEW (lbs.)	Method: AFR TO Reference Disposal Paragraph[a]
	Major Reactant(s)	Major inert (casings)		
Simulator, booby trap, M117, M118, or M119	Black powder	Paper and Plastic	0.0095	OD: 6-41
Simulator, detonation, M80	Black powder	Paper and Plastic	0.0070	OD: 6-41
Simulator, grenade, M116	Black powder	Paper and Plastic	0.0813	OD: 6-41
Simulator, projectile, ground burst, M115	Black powder	Paper and Plastic	0.1410	OD: 6-41

Notes: (1) Air Force Technical Order 11A-1-42, *General Instructions for Disposal of Conventional Munitions* was used for determining which waste munitions items were suitable for demilitarization by either OD or OB/OD. The reference cited in the last column indicates the disposal paragraph which discusses the specific disposal process. For instance, paragraph 3-6 applies to OB, paragraph 6-8 applies to OD, and the combination 3-6/6-8 applies to both processes.

(2) Refer to the TO for details on all disposal processes. There are some munitions items for which the preferred disposal process was not referenced in the TO. These were deemed suitable for OD based on the type of ordnance item and the nature of its explosive constituent.

[a]If both open burning and open detonation are allowable disposal techniques, then both recommended disposal methods are listed.

HE = high explosive
HEI = high explosive incendiary
LR = long range
NEW = net explosive weight
PETN = pentaerythritol tetranitrate
RDX = cyclotrimethylenetrintramine
Tetryl = trinitrophenylmethylnitramine
TNT = trinitrotoluene
TP = target practice

Table C-3 (continued)

Type of waste	Constituents		General or typical concentration or amount NEW (lbs.)
	Major Reactant(s)	Major inert (casings)	
Cartridge, starter, MXU-4A	Single-based	Tin	8.00
Cartridge, thruster	Single-based	Aluminum	0.0080
Catapult, rocket, CKU-5A/A	Single-based	Aluminum	5.500
Charge, demo, C-4	RDX, Polisobutylene	Plastic	30.0
Charge, shaped, C-4	RDX, Polisobutylene	Steel	0.8300
Charge, spotting, CXU-3A/B	Black powder phosphorus	Aluminum	0.0830
Cluster, MK20 Mod 3	Tetryl/RDX	Aluminum	100.0
Cord, detonation	PETN/RDX	Plastic	0.0070
Detonator, electric	RDX	Steel	0.0003
Explosive scent, K-9	Tetryl/RDX	None	8.0
Flare, ALA-17/A	Black powder phosphorus	Aluminum	2.800
Flare, signal, M206	Single-based phosphorus	Aluminum	0.2866
Flare, surface	Single-based phosphorus	Aluminum	0.300
Fuze, blasting	Tetryl/RDX	Plastic	0.0070
Fuze, bomb nose	Tetryl/RDX	Aluminum & Steel	0.1640
Fuze, bomb tail	Tetryl/RDX	Aluminum & Steel	0.0150
Fuze, delay, M9	Tetryl/RDX	Aluminum	0.0002
Fuze, extension, M1A1	Tetryl/RDX	Steel	2.00
Fuze, FMU-130/B	Tetryl/RDX	Aluminum, Steel, & Plastic	0.3600
Fuze, FMU-139A/B	Tetryl/RDX	Aluminum, Steel, & Plastic	0.2778
Fuze, FMU-54A/B	Tetryl/RDX	Aluminum & Steel	0.3600
Fuze, MK339	Tetryl/RDX	Aluminum & Steel	0.0006
Fuze, practice M228	Tetryl/RDX	Aluminum & Steel	0.0030
Generator, pressure	Single-based	Aluminum	0.0111
GTR-18, smokey sam	Black powder	Styrofoam	1.100
Grenade, M18	Single-based	Steel	0.7200
Grenade, M67	RDX	Steel	0.4100
Grenade, smoke	Black powder	Tin	1.200

Table C-3 (continued)

Type of waste	Constituents		General or typical concentration or amount
	Major Reactant(s)	Major inert (casings)	NEW (lbs.)
Grenade, TH-3	RDX	Tin	1.700
Pot, smoke	Black powder	Tin	28.00
Rocket motor	Black powder	Tin	1.100
Signal kit	Single-based	Tin	0.0812
Simulator, air burst	Black powder	Paper & Plastic	0.0825
Simulator, booby trap	Black powder	Paper & Plastic	0.0095
Simulator, detonation	Black powder	Paper & Plastic	0.0070
Simulator, grenade	Black powder	Paper & Plastic	0.0813
Simulator, projectile	Black powder	Paper & Plastic	0.1410

NEW = net explosive weight
PETN = pentaerythritol tetranitrate
TNT = trimtrotoluene
Tetryl = trintrophenylmethylnitramine
RDX = cycletrimethylenetrintramine
HEI = high explosive incendiary
LR = long range
TP = target practice
HE = high explosive

items have a low explosive-to-weight ratio, while others have a high explosive-to-weight ratio. In general, however, the amount of residue resulting from OD treatment is very small.

C-1a Containers [40 CFR 264.175(c) and 270.15(b)]

Since no explosive ordnance contains free liquids, this section is not applicable. However, all munitions which are manufactured with a metal housing or casing (e.g., cartridge, metal bomb body) will be treated in their original containment casing. These casings are designed by the manufacturer to provide long-term stability for containerization of explosive materials. Any wooden crates, boxes, or other packaging used for storage or transport of munitions will be discarded prior to any OD operations to eliminate unnecessary wastes resulting from such treatment operations.

C-1b Tanks (40 CFR 270.16)

Storage tanks for hazardous wastes are not currently used or expected to be used at the OD facility.

C-1c Surface Impoundments (40 CFR 270.17)

There are no surface impoundments for hazardous wastes at the OD area.

C-1d Waste Piles (40 CFR 270.18)

Hazardous waste piles are not maintained at the OD area.

C-1e Incinerators (40 CFR 270.19 and 270.62)

No hazardous wastes or other materials will be incinerated at the OD area.

C-1f Land Treatment (40 CFR 264.273 and 270.20)

Based upon the current design of the facility and the fact that munitions are detonated on ground surface, very small quantities of residues may remain in soil. These residues may then be incidentally degraded or transformed through photochemical oxidation or other natural processes. However, based upon the definition of "Miscellaneous Unit" in 40 CFR, 260.10, it specifically applies to a unit which "..... is not a container, tank, surface impoundment, pile, land treatment unit, landfill.... ". Therefore, in order to clearly apply one standard for this permit application, the potential reduction of these minute contaminants will be construed as natural attenuation as opposed to land treatment. It is not the intent for this unit (or this permit application) to become permitted for land treatment operations. Therefore, the design and operating requirements for a land treatment unit are not applicable.

C-1g Landfills (40 CFR 264.301 and 270.21)

The OD unit is intended only for the treatment of waste munitions. Such activities may result in some minor amounts of waste residues remaining after OD treatment. However, any hazardous waste and/or constituents remaining in ambient soils following OD operations is an incidental ocurrence and is not intended to be regarded as a disposal activity. Any waste contaminants determined through sampling and analysis to be present in ambient soils at levels above site-specific action levels will be properly containerized and disposed of, if necessary. Therefore, the design and operating requirements for a landfill are not applicable.

C-1h Additional Requirements for Land Storage, Treatment, and Disposal Facilities [40 CFR 270.14(c)]

Since the use of the OD unit is intended exclusively for the treatment of waste ordnance only, additional requirements for other hazardous waste facilities, including surface impoundments, waste piles, land treatment units, or landfills, are not applicable.

C-2 WASTE ANALYSIS PLAN [NMHWMR-7, Parts V and IX; 40 CFR 264.13(b) and (c) and 270.14(b)(3)]

All waste munitions that will be treated at the Melrose AFR OD area are standard military end items with well-defined specifications on their physical and chemical characteristics (Tables C-1 and C-2). Therefore, detailed pretreatment waste analysis requirements or validation is not applicable for the waste ordnance or needed to successfully treat ordnance items. No unknown wastes (i.e., those with no available data) will be treated. The current treatment methods to be used for all future OD operations are specified in USAF Technical Orders (TOs), which are more fully described in Sect. D. The existing published data for munitions anticipated for future disposal at the OD unit meet the general waste analysis requirements listed in this section. Detailed physical and chemical characteristics for energetic materials in munitions to be treated at the Melrose AFR OD area are shown in Tables C-1, C-2, and C-3.

Munitions and their components are inherently unstable, and instability normally increases with age. Therefore, the timely treatment of waste ordnance is an important safety concern. When sampling and analysis is needed, the increased hazards associated with the time necessary to conduct these functions must be considered when such data are requested.

The OD process normally will result in minor air emissions during treatment and will produce an unreactive residue. Baseline characterization conducted during 1993 of munition residues in soils (Appendix E) indicated only the presence of beryllium and no explosive residues. Beryllium is not associated with ordnance material; it is a naturally occurring substance found in background samples

throughout eastern New Mexico. For the limited number of munitions treated at the Melrose AFR OD unit, process knowledge should be sufficient; however, if a new type of munitions is added to the inventory at Cannon AFB, written notice of the waste stream modification, describing the components and combustion by-products as listed in Appendix C, will be forwarded to NMED for review and approval. If determined by NMED to be necessary, a modification to the Subpart X permit will be duly submitted. The sampling and analysis plan to be used for evaluating potential impacts to environmental media during the permitted operation of the facility is presented in Appendix C. The Quality Assurance (QA)/Quality Control (QC) Plan is also included in Appendix C. Appendix E contains analytical results generated from soil sampling conducted as part of the baseline characterization.

C-2a Parameters and Rationale [40 CFR 264.13(b)(1)]

Munitions residue will be sampled and analyzed as required for waste characteristics that are representative of the munitions' original components and combustion products. The analytical test methods for these analytes, with appropriate references, are listed in Table C-4.

C-2b Test Methods [40 CFR 264.13(b)(2)]

The analytical methods to be used to measure the parameters presented in Sect. C-2a are listed in Table C-4. All tests will be performed by an EPA-approved laboratory and in accordance with the latest appropriate methodology detailed in *Test Methods for Evaluating Solid Waste, Physical and Chemical Methods U.S. EPA, Office of Solid Waste and Emergency Response, November 1986, SW-846, Third Edition (amended)*. As new methods are developed and become available, they will be used accordingly.

C-2c Sampling Methods [40 CFR 264.13(b)(3)]

The sampling methods used will depend on the physical form of the waste, as shown in Table C-5. To ensure that a representative sample of the residue (contained with or on the soil) is taken, a statistical methodology for determining an adequate number of discrete samples will be used. EPA method 530-SW-84-012 outlines one method that may be used to conduct sampling.

Table C-4. Test methods for munitions residues

Parameter/Constituent	EPA Hazardous waste number	Test method	Reference
Explosive compounds	D003	Method 8330	*Test Methods for Evaluating Solid Waste, Physical and Chemical Methods*, EPA SW-846, 3rd Ed. November 1986 (amended)
Cyclotetramethylenetranitramine (HMX)			
Cyclotrimethylenetrinitramine (RDX)			
Trinitrobenzene (TNB)			
Dinitrobenzene (DNB)			
Trinitrophenylmethylnitramine (Tetryl)			
Nitrobenzene (NB)			
Trinitrotoluene (TNT)			
2,4 Dinitrotoluene (24DNT)			
2,6 Dinitrotoluene (26DNT)			
2 Nitrotoluene (2NT)			
3 Nitrotoluene (3NT)			
4 Nitrotoluene (4NT)			
Elemental metals			*Test Methods for Evaluating Solid Waste, Physical and Chemical Methods*, EPA SW-846, 3rd Ed. November 1986 (amended)
Antimony[a]	—	Method 6010	
Arsenic[a]	D004	Method 6010	
Barium	D005	Method 6010	
Beryllium[a]	—	Method 6010	
Cadmium[a]	D006	Method 6010	
Chromium	D007	Method 6010	
Cobalt	—	Method 6010	
Copper[a]	—	Method 6010	
Lead[a]	D008	Method 6010	
Mercury	D009	Method 7471	
Nickel[a]	—	Method 6010	
Selenium[a]	D010	Method 6010	
Silver	D011	Method 6010	
Thallium[a]	—	Method 6010	
Vanadium	—	Method 6010	
Zinc[a]	—	Method 6010	

[a]Priority Pollutant Metals

Table C-4. Test methods for munitions residues

Parameter/Constituent	EPA Hazardous waste number	Test method	Reference
Explosive compounds	D003	Method 8330	*Test Methods for Evaluating Solid Waste, Physical and Chemical Methods*, EPA SW-846, 3rd Ed. November 1986 (amended)
Cyclotetramethylenetranitramine (HMX)			
Cyclotrimethylenetrinitramine (RDX)			
1,3,5-Trinitrobenzene (1,3,5-TNB)			
Dinitrobenzene (DNB)			
Trinitrophenylmethylnitramine (Tetryl)			
Nitrobenzene (NB)			
2,4,6-Trinitrotoluene (2,4,6-TNT)			
2,4-Dinitrotoluene (2,4,-DNT)			
2,6-Dinitrotoluene (2,6-DNT)			
2-Nitrotoluene (2-NT)			
3-Nitrotoluene (3-NT)			
4-Nitrotoluene (4-NT)			
Elemental metals			*Test Methods for Evaluating Solid Waste, Physical and Chemical Methods*, EPA SW-846, 3rd Ed. November 1986 (amended)
Antimony[a]	—	Method 6010	
Arsenic[a]	D004	Method 6010	
Barium	D005	Method 6010	
Beryllium[a]	—	Method 6010	
Cadmium[a]	D006	Method 6010	
Chromium	D007	Method 6010	
Copper[a]	—	Method 6010	
Lead[a]	D008	Method 6010	
Mercury	D009	Method 7471	
Nickel[a]	—	Method 6010	
Selenium[a]	D010	Method 6010	
Silver	D011	Method 6010	

[a]Priority Pollutant Metals

Table C-5. Sampling methods for munitions residue

Waste type	Reference
Crushed or powdered residue	ASTM Standard D346-75
Soil or rock-like residue	ASTM Standard D1452-69
Soil-like material	ASTM Standard 1452-65
Fly ash-like material	ASTM Standard D2234-76

ASTM = American Society of Testing and Materials

Since it is anticipated that the actual amount of waste (excluding fragmentation of the munitions casings) remaining following an OD episode will usually be small, discrete samples of residue and/or soil will be collected so that the OD area is adequately characterized for any contaminants resulting form treatment operations.

C-2d Frequency of Analysis [40 CFR 264.13(b)(4)]

Munitions are generally disposed of at the OD area once every calendar quarter. Analysis will be performed quarterly within one week of a detonation, for the parameters specified in Table C-4. Analysis will be performed on a quarterly basis (provided a detonation episode occurs) for the first eight quarters. If, after 2 years of quarterly monitoring, results from sampling indicate that soils within the OD area are unaffected, then with prior approval from NMED, sampling frequency will be changed to an annual basis. When there is a change in the munitions (i.e., newly introduced ordnance items not previously disposed of at the OD area) being demilitarized at the OD unit, sampling will be conducted immediately following an OD episode. All changes in munition type will be approved by NMED.

C-2e Additional Requirements for Ignitable, Reactive, or Incompatible Wastes [40 CFR 264.13(b)(6) and 264.17]

Since waste ordnance is characteristically reactive, additional waste analysis demonstrating compliance with the requirements of ignitable, reactive, or incompatible waste management (safe handling) methods is not required. Melrose AFR is not required to meet the requirement of 40 CFR 264.13(b)(6) and 264.17.

C-3 ADDITIONAL REQUIREMENTS FOR WASTES GENERATED OFF-SITE [NMHWMR-7, Part V; 40 CFR 264.13(c)]

All wastes are currently generated off-site at Cannon AFB. In the event that a request is made by another off-site hazardous waste generator for use of the OD facility at the Melrose AFR, a permit

Table C-5. Sampling methods for munitions residue

Waste type	Reference
Crushed or powdered residue	ASTM Standard D346-75
Soil or rock-like residue	ASTM Standard D1452-69
Soil-like material	ASTM Standard 1452-65
Fly ash-like material	ASTM Standard D2234-76

ASTM = American Society of Testing and Materials

Since it is anticipated that the actual amount of waste (excluding fragmentation of the munitions casings) remaining following an OD episode will usually be small, discrete samples of residue and/or soil will be collected so that the OD area is adequately characterized for any contaminants resulting form treatment operations.

C-2d Frequency of Analysis [40 CFR 264.13(b)(4)]

Munitions are generally disposed of at the OD area once every calendar quarter. Analysis will be performed annually within one week of a detonation, for the parameters specified in Table C-4. If annual sampling is not immediately approved, then an analysis will be performed on a quarterly basis (provided a detonation episode occurs) for the first eight quarters. After these eight quarterly have elapsed, sampling will revert to an annual basis provided no significant contamination is present. When there is a change in the munitions (i.e., newly introduced ordnance items not previously disposed of at the OD area) being demilitarized at the OD unit, sampling will be conducted immediately following an OD episode. All changes in munition type will be approved by NMED.

C-2e Additional Requirements for Ignitable, Reactive, or Incompatible Wastes [40 CFR 264.13(b)(6) and 264.17]

Since waste ordnance is characteristically reactive, additional waste analysis demonstrating compliance with the requirements of ignitable, reactive, or incompatible waste management (safe handling) methods is not required. Melrose AFR is not required to meet the requirement of 40 CFR 264.13(b)(6) and 264.17.

C-3 ADDITIONAL REQUIREMENTS FOR WASTES GENERATED OFF-SITE [NMHWMR-7, Part V; 40 CFR 264.13(c)]

All wastes are currently generated off-site at Cannon AFB. In the event that a request is made by another off-site hazardous waste generator for use of the OD facility at the Melrose AFR, a permit

modification or a one-time written approval from NMED will be sought prior to proceeding with detonation activities for such waste.

It is not anticipated that a request to receive munitions from other military installations will be requested. If this occurs, however, a request for approval will be obtained from NMED prior to detonation. If approved by NMED, shipment will then be accompanied by AF Form 2005 (Issue and Turn-in document) AF Form 191, and DD Form 1348-1 (see Appendix C1-5). Since this type of waste will be regarded as hazardous waste, it will also be accompanied by an EPA Uniform Hazardous Waste Manifest. These forms will provide information that sufficiently describes the item(s) requiring treatment at the OD area. Cannon AFB EOD personnel will accept the munitions only after confirmation through:

(1) visual inspection, with due regard for safety, of each munition item;

(2) verification that all munitions are correctly entered and displayed on the proper AF forms; and

(3) verification that the munitions are acceptable for treatment at the OD unit under the conditions specified in this permit application.

The nature of munitions does not allow individual ordnance items or their makeup components to be analyzed prior to treatment or disposal. Ordnance constituents for each munition type are outlined in military specifications or technical supply bulletins. These documents are provided by the manufacturer of the ordnance. Subsequent analysis following treatment or disposal, as detailed in Appendix C, will provide an adequate evaluation of waste streams.

D. PROCESS INFORMATION

The information provided in this section is submitted in accordance with the requirements of NMHWMR-7, Parts V and IX, and 40 CFR 264.175, 176, and 270.15 through 21.

The treatment of military ordnance at the Melrose AFR is necessary due to safety concerns associated with the handling of reactive munitions. Reactive munitions wastes are generated by:

(1) exceedance of shelf-life,

(2) unserviceable due to damage in transport, and

(3) identification by higher headquarters of an unserviceable lot.

OD operations performed at Melrose AFR include munitions from all three of the above categories. The OD unit at Melrose AFR currently consists only of an OD unit; open burning (OB) has not been conducted in the unit since 1989 and is not being considered for Subpart X permitting at this time. The OD unit has historically consisted of several open trenches in the center of the unit, but all subsequent OD episodes regulated by the conditions of this permit application will be performed in a engineered grade-level bermed area. An itemization of waste munitions disposed of at the OD area since 1989 is presented in Appendix D1-1. Detailed process information for this unit is contained in Sect. D-1. The Explosive Ordnance Disposal Flight is responsible for all disposal operations conducted at the range's OD unit. An overview of the munitions treatment operations for OD follows.

Treatment operations will only be conducted during daylight hours. Prior to treatment operations, the Base weather station is contacted to verify that weather conditions are favorable. The following conditions will result in the suspension of activities:

- electrical storm or lightning within 5 miles of the range,
- winds approaching or gusting in excess of 15 mph, or
- rain, snow, hail, or dust storms.

The operating standards of the OD operations are governed by Cannon AFB Regulation 136-18, "Decontamination of Melrose Bombing/Gunnery Range and Disposal of Munitions"; USAF TO 11A-1-42, "General Instructions for Disposal of Conventional Munitions"; USAF TO 60A-1-1-31, "Explosive Ordnance Disposal Procedure"; Maintenance Operating Instructions (MOI) 136-6,

"Demolition Range Operations" (Appendix D); USAF TO 11A-1-60, "Inspection of Reusable Munitions Containers and Scrap Materials Generated from Items Exposed to, or Containing Explosives"; and AFR 127-100, "Explosive Safety Standards."

Cannon AFB Regulation 136-18 currently limits OD of on-base (i.e, Cannon AFB) generated waste munitions to a cumulative total of 1000 lb of Class 1, Division 1 explosives per treatment episode. Cannon AFB is planning for a 1000 lb NEW limit per detonation and expects the average amount per calendar quarter will be 500 lb NEW. However, because some of the large "live" bombs with 990 lb NEW may require detonation, the maximum amount for OD per quarter is projected at 3000 lb NEW. If a special instance for detonation of ordnance over 1000 lb NEW per OD episode or 3000 lb NEW per quarter is required, Cannon AFB will request a one-time waiver from NMED prior to detonation (OD treatment). Detonations have been performed in open trenches within the OD unit, and detonation procedures vary greatly depending on the type of munitions. Procedures are described in detail for each type of munitions in Sects. VI through IX of TO 11A-1-42 (Appendix D). Procedures usually involve placing the items, installing an explosive donor charge, priming, retiring to a safe and proper distance away from the OD area, and then effecting detonation. Depending on the type of munitions, the placement of the items and the selection of explosive charge and primer may vary. The TOs require that a search of the surrounding area be made after each operation and that any munitions thrown from the pile be detonated by EOD personnel. Scrap metal fragments from the OD unit vicinity will be collected and sold as recyclable metal by the Cannon Defense Reutilization and Marketing Office (DRMO). Specific OD procedures are detailed in the following section.

D-1 OD OPERATIONAL PROCEDURES

OD operations are currently conducted at the Melrose AFR on a quarterly basis, unless circumstances such as having a large lot of munitions require multiple detonations; however, this occurs infrequently.

The 27 Equipment Maintenance Squadron (EMS)/Munitions Flight (EMU) (Munitions Maintenance) review ordnance records on a quarterly basis and conducts annual visual inspections of munitions. As described in Sect. C, munitions typically have several components other than explosives, including fuses, delays, timers, propellants, and pyrotechnics. These components are encased separately from the main body of the munitions. They are inspected upon initial acceptance and withdrawal from storage, and they may have a specific shelf-life. These measures ensure that the munitions are safe and will properly function when delivered from the aircraft. At times, these components will be deemed "out of specification" for such reasons as expired shelf-life, damage, manufacturing defects, cause for safety incident, or discontinuation of the item (technology change). If an item is determined to be out-of-specification, it is given a Condition Code H. If a "Condition

Code H" is given, 27 EMS proceeds to complete an Ammunition Disposal Report (ADR), which is what EOD personnel will use for scheduling the next detonation operation.

27 EMS (the transporter), in conjunction with 27 CEV (the generator), will establish a Hazardous Waste Manifest for transport of the munitions item to Melrose AFR. The items are then loaded from the munitions storage area in accordance with DOT and Air Force regulations. These procedures are reviewed, monitored, and closely scrutinized by the DoD Explosive Safety Board. The Base Traffic Management Office, which serves as the point of contact for all Base materials shipments, regularly reviews the procedures involved in preparing munitions for transport. When the items are ready for shipment, they are transported to the range by truck via U.S. Highway 60/84. At Melrose AFR, 27 EMS personnel check in with the Range Control Officer (RCO) and EOD. Clearance is then granted to move to the OD area where the munitions are off-loaded and reinventoried by EOD personnel using the manifest and ADR listing to ensure that no items are missing.

EOD personnel prepare the munitions for destruction (treatment) by laying the items in rows in the detonation area. Plastic explosive (C-4), with a blasting cap/time fuse inserted, is laid across the top of the items to initiate the detonation. Once preparations are complete and the EOD technician-in-charge has reviewed all actions, nonessential personnel are withdrawn to at least 1200 ft upwind of the OD area. Detonation clearance is then requested from the RCO to ensure that the entire impact area is safe for detonation. Upon approval, the time fuse is initiated, and all personnel withdraw immediately to the clear area.

If the system fails to detonate, a mandatory 30-min "safety wait" is observed prior to reentering the OD unit. Only the minimum number of EOD personnel required to inspect the "Dud fire" of the system are allowed to reenter the unit. If the system successfully detonates, a 30-min safety wait is also observed. After the 30-min safety wait, EOD personnel reenter the area to check for "kick-outs" and other debris that may not have been fully destroyed.

Once treatment is complete, EOD personnel sign the manifest as the treatment facility operator, and the completed manifests are submitted to CEV and EOD.

D-2 CONTAINERS [NMHWMR-7, Parts V and IX; 40 CFR 264.17(a) and (b), 264.601, and 270.15 through 21]

This is not applicable. Melrose AFR does not store containers of hazardous wastes at the OD unit.

D-3 TANKS (NMHWMR-7, Part IX; 40 CFR 270.16)

This is not applicable. Melrose AFR does not maintain tanks for storage, treatment, or disposal of hazardous wastes at the range.

D-4 WASTE PILES (NMHWMR-7, Part IX; 40 CFR 270.17)

This is not applicable. Melrose AFR does not maintain waste piles at the range.

D-5 SURFACE IMPOUNDMENTS (NMHWMR-7, Part IX; 40 CFR 270.18)

This is not applicable. Melrose AFR does not maintain surface impoundments at the range.

D-6 INCINERATORS (NMHWMR-7, Part IX; 40 CFR 270.19)

This is not applicable. Melrose AFR does not maintain incinerators at the range.

D-7 LAND TREATMENT (NMHWMR-7, Part IX; 40 CFR 270.20)

This is not applicable. The OD unit is not intended as a land treatment facility at the range. (Section C—1f provides further information.)

D-8 LANDFILLS (NMHWMR-7, Part IX; 40 CFR 270.21)

This is not applicable. The OD unit is not intended to be a disposal facility (landfill) at the range. (Section C—1g provides further information.)

D-9 MISCELLANEOUS UNITS (NMHWMR-7, Parts V and IX; 40 CFR 264.601 and 270.23)

The OD unit is considered a miscellaneous unit as defined under 40 CFR 260.10. OD operations will not involve the management (where wastes are either treated, stored, or disposed of) of hazardous waste containers, tanks, waste piles, surface impoundments, incinerators, land treatment units, or landfills as indicated above in Sects. D-3 through D-8. Hazardous waste operations are to be performed for the purpose of treating waste munitions in a grade-level bermed unit where such activities involve treatment of waste ordnance. This unit will thus be managed as a miscellaneous unit, for treatment only, utilizing an earthen-constructed OD unit as detailed in the following sections.

D-9a(1) Basic Design Parameters, Dimensions, and Materials of Construction [40 CFR 264.601 and 270.23 (a) (1) and (2)]

OD operations are to be performed in a single, earthen-constructed, open-ended, and grade-level bermed unit that will be located at the OD unit at the Melrose AFR (see Fig. B-7). Technical drawings of the unit are presented in Appendix D1-7. The OD unit, including its bermed walls, will be approximately 72 ft long x 44 ft wide (maximum 64 ft wide) x 4 ft high. The detonation pad will have a 2% slope to ensure that water will run-off and not pond.

The detonation structure berm and detonation pad will consist of clay, and will constructed in several 8 in. lifts, compacted to 95% natural compaction, as measured by standard proctor compaction tests. This may be accomplished using standard construction equipment such as a sheeps foot roller or plate tamper. The clay may be obtained nearby from sources such as 700 ft north along the bank of the intermittent draw.

The outer berm will consist of clay, and be constructed in 8 in lifts, sufficiently compacted to 95% natural compaction, as measured by standard proctor compaction tests. The outer edge of the berm will be scarified for placement of geotextile membrane and seeded for cover. This will ensure that the outer berm will not be eroded away or "washed out" during a 100-year 24-hour storm event.

Physical barriers or structures associated with the OD unit will be emplaced to prevent or minimize surface water runoff and runon; these include detonation structure berm and outer berms that will direct the water away from the unit. As constructed, the OD unit will be surrounded by an exterior berm encircling the clear area of the facility which protects it from a 100-year flood event. Likewise, the outer berm will also prevent or minimize off-site transport of any waste munitions residues that might occur during periods of heavy rainfall. After each detonation episode, the Melrose AFR operations and maintenance contractor will be required to reshape and recompact the detonation structure berm and reslope the detonation pad.

D-9a(2) Description of How Design Promotes Proper Drainage and Prevents Constant Standing Water [40 CFR 264.601 and 270.23(a)]

The OD unit will consist of an earthen berm and detonation pad constructed to prevent or minimize the development of cracks, holes, or other openings, thus ensuring that all wastes in the OD operation are contained within the unit during treatment operations to the maximum extent allowable by such type of construction. The detonation pad will include a 2% sloping surface designed to preclude precipitation from pooling within the bermed OD unit. The unit will remain empty except during OD treatment episodes. Waste materials to be placed in the unit will be in solid form and will not contain free liquids.

D-9a(3) Capacity of the OD Unit Relative to the Volume of Ordnance Disposed of During One Operation [40 CFR 264.601 and 270.23(a)]

The volume of ordnance disposed of during one detonation episode is estimated to be less than 10% of the total volume of the detonation unit.

D-9a(4) Provisions for Preventing or Managing Runon [40 CFR 264.601 and 270.23(a)]

The OD unit will not contain waste munitions except during OD treatment episodes, which include placement of ordnance, OD, and removal of debris. Since the OD detonation pad will consist of a 2% sloping surface, no runon to the unit will be possible.

D-9a(5) How Accumulated Liquids Can Be Analyzed and Removed to Prevent Overflow [40 CFR 264.601 and 270.23(a)]

Precipitation will not be permitted to accumulate in the OD unit, as described above in Sect. D-9a(2) and (4).

D-9b Special Requirements for Ignitable or Reactive Waste [40 CFR 264.17(a), 264.176, 265.382, and 270.15(c)]

The detonation unit has been developed on the Melrose bombing range to provide a margin of safety from other environs. Figure B-3 is the topographic map of the OD unit and the surrounding area; it shows approximate distances from the treatment/disposal site to pathways of concern. Explosives OD will comply with the safety distance requirements specified in TO 11A-1-42 and facility boundary distance requirements defined under 40 CFR 265.382. Table D-1 below shows the distance requirements to the nearest property boundary from OD operations per pound of explosives. The maximum weight of any combination of munitions to be treated during an OD episode will be 1000 lb NEW.

Table D-1. Disposal Range Separation Distances (40 CFR 265.382)

Pounds of waste explosive or propellants	Minimum distance from open burning or detonation to the property of others
0 to 100	204 meters (670 ft)
101 to 1,000	380 meters (1,250 ft)
1,001 to 10,000	530 meters (1,730 ft)
10,001 to 30,000	690 meters (2,260 ft)

The perimeter of the OD area at Melrose AFR is approximately 8500 ft (2590 meters) from the nearest (east) range property line. Thus, separation distances are sufficient to accomodate OD of the amounts of munitions specified in Section D.

D-9c Special Requirements for Incompatible Wastes [40 CFR 264.17(b), 264.177, and 270.23(a)]

Only unexploded ordnance will be detonated in the OD unit. No other types of wastes are managed within the OD unit.

D-9d Management of Waste Munition Ash/Residue [40 CFR 264.15(c) and 270.23(a)]

EOD treatment operations at the OD unit will be conducted in a manner that minimizes, to the maximum extent possible, the release of hazardous wastes/constituents to ambient soils. OD treatment processes generally produce very small quantities of waste residues, which may contain trace amounts of toxic metals, and effectively eliminate the explosive characteristics of waste munitions. OD processes also result in the ejection of ordnance casing fragments that may be thrown some distance away from the OD unit.

To demonstrate that OD operations do not contribute contamination to ambient soils, a soils sampling program, as described in the Waste Analysis Plan in Sect. C-2 and the Sampling and Analysis Plan in Appendix C, will be implemented to monitor the quantities and distribution, if any, of any waste constituents present (i.e. debris). As specified in Sect. F-2c, fragments from expended ordnance casings and other inert materials will be collected after each OD episode. If residues are characteristically hazardous, EOD personnel will containerize them for off-site disposal at an authorized facility in accordance with state and federal regulations.

D-10 EFFECTIVENESS OF EOD TREATMENT [40 CFR 270.23(d)]

Appendix E provides analytical results for soil samples collected from the OD unit at the Melrose AFR during May and June 1993. These samples were analyzed for toxic metals and explosive compounds. Analytical results of the sampling showed no explosive residues in soils. The only metal in soils that exceeded action levels was beryllium (the action level for beryllium is 0.20 mg/kg). Concentrations at the OD area ranged between nondetected and 0.69 mg/kg; however, beryllium values were elevated in background samples and are naturally high throughout New Mexico and other southwestern states. Furthermore, as presented in Sect. C and Appendix C, beryllium is not a toxic metal associated with components or combustion by-products of ordnance items.

Thus, due to the absence of explosive compounds and toxic metals associated with waste munitions, this information indicates that OD operations are safe and effective methods for the treatment of waste munitions.

D-11 BIENNIAL REPORTING (NMHWMR-7, Part V; 40 CFR 264.75 and 264.602)

Melrose AFR will prepare and submit a biennial report to the NMED RCRA Program Manager and/or EPA Regional Administrator. The report will be submitted on EPA Form 8700-13B by March 1 of each even-numbered year. The report will cover all EOD activities during the previous calendar year and will include:

- the EPA identification number and the facility address,
- the calendar year covered by the report,
- a description and the quantity of each hazardous waste received by the facility during the year,
- the method of treatment for each hazardous waste,
- a description of the efforts undertaken during the year to reduce the volume and toxicity of waste generated,
- a description of the changes actually achieved in volume and toxicity of waste during the year, and
- the certification signed by the owner or operator of the facility or his authorized representative.

D-11a Unmanifested Waste Report (40 CFR 264.76 and 264.602)

The OD unit at Melrose AFR will receive wastes generated by Cannon AFB operations conducted in support of its current mission. EOD personnel will inventory incoming wastes munitions to verify that the manifested waste is consistent with the types and quantities of waste munitions arriving. When the manifest is verified, the munitions will then be scheduled for treatment.

D-11a(1) Additional Reporting (40 CFR 264.77 and 264.602)

Reports to the NMED RCRA Program Manager and EPA Regional Administrator are covered in detail in Sect. G and Sect. I of this permit application.

E. ENVIRONMENTAL PERFORMANCE STANDARDS

This section provides a detailed description of environmental, geological, and hydrogeological conditions at the Melrose AFR OD unit, in accordance with the requirements of various provisions specified under NMHWMR-7, Parts V and IX, and 40 CFR 264.601 and 270.14.

E-1 SUBSURFACE ASSESSMENT [NMHWMR-7, Part V; 40 CFR 264.601(a)]

The Melrose AFR is in the central portion of the Southern High Plains plateau. In the area of Melrose AFR, surface topography is characterized to some extent by the appearance of small, internally drained temporary lake basins known as playas. Due to the low annual rainfall, high lake evaporation rate, and minimal topographic relief, surface streams are generally poorly developed and exist as intermittent streams with no apparent receiving waters. Drainage patterns that do exist consist of long shallow valleys called draws that originate in areas of higher relief such as the mesas commonly found in the area.

Groundwater in the Melrose AFR area is found at an estimated depth of 94 to 100 ft below surface in a perched water zone, well above the Ogallala Aquifer. These hydrologic zones are not believed to be hydraulically connected (see the USGS Geologic Report in Appendix E).

E-1a Volume and Characteristic of the Waste [40 CFR 264.601(a)(1)]

The volume and characteristics of the waste to be thermally treated at the OD unit are described in Sect. C. Waste munitions are transported to the OD unit in their original containers or casings, which are designed for long-term stability and thus ensure that no wastes are inadvertently released to the environment prior to treatment.

The OD operations will be conducted within a single bermed area at the OD unit, as described in Sect. D. Contaminants released during treatment, usually limited to trace amounts of explosive compounds or toxic metals, should not adversely affect subsurface soils as a result of these activities. Past soil analyses have not shown any of these contaminants to be at levels that pose an actual or potential threat to human health or the environment. Furthermore, waste munitions are for the most part insoluble in water (see Table C-2), thus limiting the potential for wastes to migrate through soil or into surface or groundwater. The primary concern of releases of any contaminants would be gaseous and, therefore, affect air media rather than subsurface media.

E-1b Hydrogeologic Characterization [40 CFR 264.601(a)(2) and 270.14(c)]

The Ogallala Formation of Tertiary (Pliocene) age is the primary regional aquifer for both potable and irrigation water in the Southern High Plains of western Texas and eastern New Mexico. The Ogallala Formation consists of clay, silt, fine-to coarse-grained sand, gravel, and caliche. The lithology varies both vertically and horizontally within short distances, and individual beds or lenses are not continuous over wide areas. Although most of the Ogallala is unconsolidated, sediments near the top and locally within the formation have been cemented, mainly by calcium carbonate, to form resistent, impermeable beds of caliche. The formation ranges in thickness from 0 ft where the formation pinches out against older rocks to as much as 500 ft in east-central Curry County, New Mexico.

The Ogallala Aquifer is part of the High Plains aquifer that extends continuously from Wyoming and South Dakota into New Mexico and Texas. In east-central New Mexico, the Ogallala Aquifer rests on Dockum Group redbeds, which serve as the basal confining layer. It is believed that the Ogallala Formation and the Portales Valley Fill, which underlies the Melrose AFR, exist as a single hydrologic unit. The two underground basins that are part of the Ogallala Aquifer and extend beneath the currently expanded Melrose AFR are the Fort Sumner Basin and the Portales Basin. The State of New Mexico's Engineer's Office considers these to be the only designated or declared aquifer basins that extend into the area bounded by the range.

The groundwater in the Ogallala Formation exists under unconfined conditions and is contained in the pore spaces of the unconsolidated or partially consolidated sediments, which are underlain in most of the area by relatively impermeable clays and shales. Groundwater flow has a southeasterly regional gradient of approximately 13 ft/mile. The saturated thickness of the Ogallala Aquifer ranges from less than 50 ft to more than 300 ft, although increased agricultural withdrawals for this groundwater have caused a significant decline in the water table since the 1930s and the overall reduction in the saturated thickness. At the Melrose Range, it is estimated to be less than 100 ft. As a result, well yields have likewise decreased over the years. Well yields vary from less than 1 gpm in thin silts and sands up to 1600 gpm in thick sands and gravels. Water quality is generally good, although the water is typically hard and has high concentrations of fluoride in many areas.

Exploratory holes drilled at the OD area as part of hydrogeologic investigations of the site were not advanced deep enough to intercept the Ogallala Aquifer. However, this investigation did confirm, as previously believed, the existence of a more shallow perched zone found at a depth ranging from 94 to 100 ft below surface grade (BSG). The areal extent of this perched zone has not been accurately determined. A more detailed description of hydrogeologic characterizations of the area is presented in the geologic report of Appendix E.

E-1b Hydrogeologic Characterization [40 CFR 264.601(a)(2) and 270.14(c)]

The Ogallala Formation of Tertiary (Pliocene) age is the primary regional aquifer for both potable and irrigation water in the Southern High Plains of western Texas and eastern New Mexico. The Ogallala Formation consists of clay, silt, fine-to coarse-grained sand, gravel, and caliche. The lithology varies both vertically and horizontally within short distances, and individual beds or lenses are not continuous over wide areas. Although most of the Ogallala is unconsolidated, sediments near the top and locally within the formation have been cemented, mainly by calcium carbonate, to form resistent, impermeable beds of caliche. The formation ranges in thickness from 0 ft where the formation pinches out against older rocks to as much as 500 ft in east-central Curry County, New Mexico.

The Ogallala Aquifer is part of the High Plains aquifer that extends continuously from Wyoming and South Dakota into New Mexico and Texas. In east-central New Mexico, the Ogallala Aquifer rests on Dockum Group redbeds, which serve as the basal confining layer. It is believed that the Ogallala Formation and the Portales Valley Fill, which underlies the Melrose AFR, exist as a single hydrologic unit. The two underground basins that are part of the Ogallala Aquifer and extend beneath the currently expanded Melrose AFR are the Fort Sumner Basin and the Portales Basin. The State of New Mexico's Engineer's Office considers these to be the only designated or declared aquifer basins that extend into the area bounded by the range.

The groundwater in the Ogallala Formation exists under unconfined conditions and is contained in the pore spaces of the unconsolidated or partially consolidated sediments, which are underlain in most of the area by relatively impermeable clays and shales. Groundwater flow has a northeasterly regional gradient of approximately 13 ft/mile. The saturated thickness of the Ogallala Aquifer ranges from less than 50 ft to more than 300 ft, although increased agricultural withdrawals for this groundwater have caused a significant decline in the water table since the 1930s and the overall reduction in the saturated thickness. At the Melrose Range, it is estimated to be less than 100 ft. As a result, well yields have likewise decreased over the years. Well yields vary from less than 1 gpm in thin silts and sands up to 1600 gpm in thick sands and gravels. Water quality is generally good, although the water is typically hard and has high concentrations of fluoride in many areas.

Exploratory holes drilled at the OD area as part of hydrogeologic investigations of the site were not advanced deep enough to intercept the Ogallala Aquifer. However, this investigation did confirm, as previously believed, the existence of a more shallow perched zone found at a depth ranging from 94 to 100 ft below surface grade (BSG). The areal extent of this perched zone has not been accurately determined. A more detailed description of hydrogeologic characterizations of the area is presented in the geologic report of Appendix E.

E-1b(1) Depth to Uppermost Aquifer [40 CFR 270.14(c)(2)]

As discussed in the previous section, a June 1993 investigation of the OD site did not encounter the Ogallala Aquifer but did determine that a more shallow water-bearing zone (small perched zone) is present beneath the site at approximately 94 ft. BSG. It is believed that this perched zone contains the same groundwater that is used for many of the irrigation and stock wells on the Melrose Range. For purposes of this permit application and in accordance with the regulatory definitions provided under 40 CFR 260.10, this perched zone will be considered the uppermost aquifer. Additional information on the investigation, including well logs, is detailed in Appendix E.

E-1b(2) Estimated Annual Recharge [40 CFR 270.14(c)(2)]

The climate at the Melrose AFR is considered semiarid, with an annual average rainfall of 14 in. Recharge to all groundwater underlying the range is primarily through precipitation. Studies conducted on groundwater resources in eastern New Mexico by Berkstresser and Mourant (1966) report a recharge rate for this area of 0.5 in/year as calculated by Theis (1936). Because of the high evapotranspiration rate (92 in/year) and low precipitation, recharge will occur only during heavy rainfalls events (summer thunderstorms account for 73% of the area's precipitation) during which the infiltration capacity of the soil is exceeded and runoff occurs or during cool months when precipitation may exceed evapotranspiration.

E-1b(3) Subsurface Characterization [40 CFR 270.14(c)(2)]

Information detailing groundwater occurrence beneath the Melrose AFR OD unit is previously discussed in Sects. E-1b(1) and (2) and is also detailed in the Geologic Report in Appendix E. Due to the limited nature of the hydrogeologic investigation at the OD area, the flow rate and direction of groundwater within the uppermost water-bearing zone (perched zone) was not determined.

According to the Roosevelt County Soil Survey conducted by the Soil Conservation Service, soils at the Melrose AFR OD unit are regarded as Olton Loam [0% to 1% slopes]. This soil is described as occurring in the wheat-growing section of the county in the vicinity of Rogers and Dora and as not covering an extensive area. The surface layers consist of approximately 4 of brown to dark-brown loam, have a strong granular structure, and are noncalcareous. The subsoil is noncalcareous clay loam, about 24 in. thick with a subangular blocky structure. This layer overlies a strongly calcareous layer that is 20 in. thick, reddish-brown, and massive. The substratum consists of very strongly calcareous pink silt loam. It is similar to the present sediment of the Amarillo soils. Soils of the Olton Loam exhibit moderate runoff, with generally slow internal drainage. Pooling of water is common following a heavy rainfall.

Based on soil borings drilled at the range, the top 20 ft of materials at the OD area consists predominantly of silt with minor amounts of sand, clay, and gravel. Caliche (a geologic material

consisting of gravel, sand, or other debris cemented by porous calcium carbonate) and calcification layers are scattered throughout the section. From 20 to approximately 60 ft BSG, materials become coarser and include greater quantities of sand and quartz pebbles. Below this depth (down to 180 ft), competent bedrock is encountered. Sandstone is the predominant lithology, but is interbedded with thinner lenses of mudstone, shale, and some siltstone. The well log presented in Appendix E indicates a lens of mudstone found at a depth ranging between approximately 105 to 120 ft BSG (i.e., 15 ft thick). Although this mudstone is intermixed with some siltstone, it is believed to be relatively tight and very clayey. Thus, it represents the semi-impermeable/impermeable layer upon which the previously described water-bearing zone is perched.

E-1c Existing Groundwater Quality [40 CFR 264.601(a)(3)]

Groundwater from the Ogallala Formation and the shallow perched zone is used for a variety of purposes, including irrigation, public supply, industrial supply, domestic water supplies, and livestock watering. As mentioned previously, groundwater drawn from the Ogallala is considered to be generally good, with hardness and fluorides being somewhat high. Groundwater beneath the Melrose AFR is currently used for irrigation, livestock watering, potable water, and fire fighting at the Melrose AFR operations control compound. As previously mentioned in Sect. E-1b(1), it is believed that most stock and irrigation wells derive their water from the shallow perched zone (uppermost aquifer). Table E-1 contains groundwater quality data from the potable water well near the operation center. The locations of these wells are delineated in Fig. B-6.

E-1d Groundwater Direction and Flow Rate [40 CFR 264.601(a)(4)]

Groundwater within the Portales Basin of the Ogallala Aquifer flows in a northeasterly direction beneath the Melrose AFR toward the Portales Valley. No aquifer tests have been performed in the vicinity of the Melrose AFR area to accurately determine transmissivity or the flow rate of groundwater in either the uppermost aquifer (perched zone) or the Ogallala Aquifer.

E-1e Proximity to Groundwater Withdrawal Points [40 CFR 264.601(a)(5)]

The only potable water supply well on the Melrose AFR is approximately 10,500 ft due north of the OD unit and serves the operations control compound. Numerous irrigation and livestock wells around the OD unit are presently in use. The closest irrigation/stock well appears to be southwest of the OD unit and is approximately 9800 ft away (Fig. B-6). There are approximately 47 wells within the Melrose AFR that are used to supply water for domestic livestock and irrigation.

Table E-1. Groundwater Quality, Range Control Operations Water Well, Melrose AFR

Analyte	Concentration (μg/L)	Analyte	Concentration (μg/L)
Organochlorine pesticides (Method 8080)			
Aldrin	<0.01	delta-BHC	<0.001
Chlordane	<0.02	Endosulfan I	<0.001
DDD	<0.003	Endosulfan II	<0.005
DDE	<0.002	Endosulfan sulfate	<0.003
p-DDT	<0.007	Endrin aldehyde	<0.002
Dieldrin	<0.001	Aroclor 1016	<0.08
Endrin	<0.004	Aroclor 1221	<0.05
Heptachlor	<0.005	Aroclor 1232	<0.07
Heptachlor epoxide	<0.002	Aroclor 1242	<0.03
Lindane	<0.002	Aroclor 1248	<0.08
Methoxychlor	<0.01	Aroclor 1254	<0.1
Toxaphene	<0.09	Aroclor 1260	<0.08
alpha-BHC	<0.006	Dibutyl chlorendate	0.92
beta-BHC	<0.001	Tetrachloro-m-xylene	0.75
Pesticides (Method 515)			
2,4-D	<0.5	Dalapon	<2.5
2,4,5-T	<0.25	Dinoseb	<0.5
Silvex	<0.25	Picloram	<0.5
2,4-DB	<2.5	Pentachlorophenol	<0.25
Dicamba	<0.25		
Chlorinated volatile organics (wide bore capillary column)			
Benzene	<0.3	Bromodichloromethane	<0.4
Carbon tetrachloride	<0.5	Bromoform	<0.7
1,4-Dichlorobenzene	<0.5	Bromomethane	<0.9
1,2-Dichloroethane	<0.3	n-Butylbenzene	<0.4
1,1-Dichloroethene	<0.3	sec-Butylbenzene	<0.7
1,1,1-Trichloroethane	<0.5	tert-Butylbenzene	<0.3
Trichloroethylene	<0.5	Chlorobenzene	<0.3
Vinyl chloride	<0.2	Chloroethane	<0.9

Table E-1 (continued)

Analyte	Concentration (µg/L)	Analyte	Concentration (µg/L)
Bromobenzene	<0.6	Chloroform	<0.3
Bromochloromethane	<0.4		
Metals (various methods)			
Antimony	82.0	Magnesium	57
Arsenic	34.0	Mercury	<1
Barium	<100	Nickel	<50
Beryllium	<10	Selenium	115.0
Cadmium	<5	Silver	<5
Chromium	<20	Sodium	224
Chromium (hexavalent)	HTE	Thallium	26.0
Copper	<20	Zinc	<50
Lead	<5		
Semivolatile organic compounds (wide bore capillary column)			
Styrene	<0.3	Dichlorodofluoromethane	0.5<
1,1,1,2-Tetrachloroethane	<0.2	1,1-Dichloroethane	<0.4
1,1,2,2-Tetrachloroethane	<0.2	cis-1,2-Dichloroethane	<0.2
Tetrachloroethylene	<0.6	cis-1,3-Dichloropropene	<0.5
Toluene	<0.3	trans-1,3-Dichloropropene	<0.5
1,2,3-Trichlorobenzene	<0.7	trans-1,2-Dichlorethene	<0.5
1,2,4-Trichlorobenzene	<1.4	1,2-Dichloropropane	<0.3
1,1,2-Trichloroethane	<0.2	1,3-Dichloropropane	<0.5
Trichlorofluoromethane	<0.4	2,2-Dichloropane	<0.5
1,2,3-Trichloropropane	<0.3	1,1-Dichloropropene	<0.5
1,2,4-Trimethylbenzene	<0.1	Ethylbenzene	<0.6
1,3,5-Trimethylbenzene	<0.3	Hexachlorobutadiene	<0.5
o-Xylene	<0.3	Isopropylbenzene	<0.4
m-Xylene	<0.3	p-Cymene	<0.3
p-Xylene	<0.6	Methylene chloride	<0.4
Chloromethane	<0.8	Naphthalene	<0.6
2-Chlorotoluene	<0.5	n-Propylbenzene	<0.4

Table E-1 (continued)

Analyte	Concentration (μg/L)	Analyte	Concentration (μg/L)
4-Chlorotoluene	<0.3	Chloroform	<0.3
Chlorodibromomethane	<0.5	Bromodichloromethane	<0.4
Dibromomethane	<0.5	Chlorodibromomethane	<0.5
1,2-Dichlorobenzene	<0.5	Bromoform	<0.7
1,3-Dichlorobenzene	<0.5		
Inorganics (300 series methods)			
Ammonia	<0.2	Cyanide (total)	<0.005
Nitrate (as nitrogen)	1.44	Phenol	<10
Nitrite (as nitrogen)	<0.02	Sulfate	206

Source of Analytical Data: Samples were collected at the Melrose AFR on October 28, 1992.
Samples were analyzed at Armstrong Laboratory, Brooks AFB, Texas, between November 12 and December 4, 1992.

E-1f Assessment of Groundwater Migration Potential [40 CF4 264.601(a)(6) through (9)]

Table E-1 contains the only currently available data for groundwater quality at the Melrose Range. This analytical data indicates that groundwater beneath the Melrose Range has not been impacted by activities related to the operation of the OD unit. Analyses from the potable well did show that certain toxic metals, including antimony (82.0 μ/L), arsenic (34.0 μ/L), and selenium (115.0 μ/L), were detected at elevated concentrations in the potable water well. These values cannot be attributed to the OD unit due to the distance that separates them and the fact that the well is believed not to be hydraulically downgradient from the unit based on regional flow within the Ogallala Aquifer. It is more probable that the elevated levels reflect naturally occurring metals in the soils and/or the aquifer.

In summary, factors supporting the determination that the potential is extremely low for a contaminant to originate at the OD unit and migrate to the groundwater include the following.

- Analytical data strongly indicate that previous OD activities have not impacted soils beneath the site. Therefore, it is unlikely that groundwater in the uppermost aquifer beneath the OD treatment area has been impacted.

- Lithologic logs indicate that from ground surface to the first groundwater encountered within the perched zone at 95 ft BGS, there are numerous areas in the upper portion (top 50 ft) where unconsolidated geologic materials are characteristically silty and clayey. Below this, there is very fine-grained sandstone which overlies what is probably a relatively impermeable layer of mudstone and shale which is approximately 13 ft thick. Together, these conditions should prolong recharge rates and retard any downward percolating water or other liquids that may contain hazardous wastes or constituents.

- Climatological information shows that recharge rates are very low, evapotranspiration rates very high, and resultant hydraulic head from meteoric precipitation are insufficient to drive contaminants to any great depth.

- The nature of the waste munitions and residues following treatment have no or only slight solubility in water (see Table C-2).

An identification of other potential sources of groundwater contamination at the Melrose AFR was accomplished during the performance of a RCRA Facility Assessment (RFA) by A.T. Kearney in 1987. The RFA identified seven potential solid waste management units (SWMUs) at the range, although none of these SWMUs are at this time anticipated to require any remedial action. Information for these SWMUs is summarized in Table E-2. In addition, the operations and maintenance compound utilizes a septic tank/leach field for disposal of sanitary wastes.

E-1f Assessment of Groundwater Migration Potential [40 CF4 264.601(a)(6) through (9)]

There are several factors, including site-specific conditions, distance to groundwater users, and other criteria that support the determination that (1) the potential for contamination of groundwater resulting from OD treatment operations is extremely low or improbable and (2) groundwater represents the pathway of least potential for migration of contaminants. Factors supporting this determination include the following:

- **Analytical data.** Although there are no groundwater data to directly support this conclusion, analytical data collected by the USGS during its 1993 site assessment study indicate conclusively that previous OD activities did not affect soils beneath the site. By proxy, the lack of any soil contamination from EOD operations strongly indicates that groundwater in the uppermost aquifer beneath the OD treatment area has not been affected.

- **Geology/Depth to uppermost groundwater.** Lithologic log from the deep hole boring installed in 1993 shows that depth to the first water-bearing zone is 95 BSG. The upper 55 ft of unconsolidated materials consist predominately of silts and clays. Below this, very fine-grained sandstone overlies a rather impermeable layer of mudstone and shale which is approximately 13 ft thick. The actual hydraulic conductivity of these materials has not been determined, but permeability values found in Table 2.2 of *Groundwater* (Freeze and Cherry, 1979) show a range of 10^{-9} to 10^{-6} cm/sec for these geologic materials. These conditions will inhibit recharge by retarding any downward percolating water or other liquids that may contain hazardous wastes or constituents.

- **Climate.** Climatological information shows that the OD unit is located in an arid region which receives only ~15 in. of rainfall annually. Evaporation rates for this area are high and are typical of those found at Clovis, New Mexico [the average rate, as recorded by the New Mexico State University Agricultural Center at Clovis between the months of April and September over a 26-year period (from 1954 to 1984) was 58.8 in.]. This combination results in a negative water balance, with negligible hydraulic head available to drive contaminants to any great depth.

- **Groundwater uses/receptors.** Although there are numerous groundwater withdrawal points on the Melrose range, the closest irrigation/stock well is nearly two miles away to the southwest. The only potable water well is approximately 12,000 ft north of the OD unit, and this well is believed to be completed in the deeper Ogallala Aquifer.

- **Other considerations.** There are no known sensitive environmental receptors (e.g., wetlands) that might be affected by groundwater contamination; OD operations are designed to maximize the effectiveness of the treatment process in a manner which renders all explosive materials to nonhazardous residue except for trace amounts of certain metals.

An identification of other potential sources of groundwater contamination at the Melrose AFR was accomplished during the performance of a RCRA Facility Assessment (RFA) by A. T. Kearney in 1987. The RFA identified seven potential solid waste management units (SWMUs) at the range, although none of these SWMUs are currently anticipated to require any remedial action. Information for these SWMUs is summarized in Table E-2. In addition, the operations and maintenance compound uses a septic tank/leach field for disposal of sanitary wastes.

Table E-2. Summary of SWMUs at the Melrose AFR

Site no. SWMU	Site type	Description	Material disposed of	Date of operation
114	Potential SWMU	Melrose Bombing Range Expended Ordnance Burial Site	Scrap metal from practice bombs and munitions	1952 to 1984
115	Potential SWMU	Melrose Bombing range Explosives Contaminated Burial Site	Unexploded ammunition; existence not confirmed	Unknown
116	Potential SWMU	Melrose Bombing Range Roads	Waste oil from SWMU No. 48 for dust control	Unknown
117	Potential SWMU	Melrose Bombing Range Domestic Waste Pile	Domestic waste from range support activities	Unknown
118	Potential SWMU	Melrose Bombing Range Unexploded Ordnance Open Burn Treatment Pit	Small calibre munitions are burned	1959 to 1989
119	Potential SWMU	Melrose Bombing Range Unexploded Ordnance Holding Area	Temporary holding area for unexploded ordnance prior to burning	Unknown
120	Potential SWMU	Melrose Bombing Range Expended Target Area	Temporary storage of expended range targets	Unknown

E-2 SURFACE MEDIA ASSESSMENT [NMHWMR-7 Part V; 40 CFR 264.601(b)]

This section describes the surface water and soil receptors and contains an assessment for each.

E-2a Volume and Characteristics of the Waste [40 CFR 264.601(b)(1)]

These were previously described in Sects. E-1a and C.

E-2b Containment Facilities [40 CFR 264.601(b)(2)]

The OD unit used for treatment operations is described in Sect. D. Based on the combustion by-products presented in Tables C1-1, C1-2, and C1-3 of Appendix C and the lack of any nearby streams that flow year-round (all surface streams are intermittent due to low annual rainfall and minimal relief), the potential for significant fallout into any available surface receptor would be improbable or minimal. The closest surface water to the OD unit is an unnamed intermittent stream that flows on the northside of the OD unit, approximately 700 to 800 ft north of the perimeter fence. The USGS topographic map (Tolar SE, New Mexico) indicates that this stream empties into a small residual playa or pond just south of the east range access road.

E-2c Hydrological Characteristics [40 CFR 264.601(b)(3)]

The Melrose AFR is within the Great Plains Physiographic Province at the west-central portion of the southern High Plains, which is characterized by a semiarid, continental climate resulting in few streams that flow year round. Small temporary lake basins known as playas dominate the surface hydrology in the High Plains Playas, believed to result from soil erosion by wind, have no external surface outlets so water is instead lost by downward infiltration into underlying soils and by evaporation. These playas are not numerous within the Melrose AFR, and there appear to be none of significant size within at least 3 miles of the OD area.

Surface stream drainage is poorly developed and intermittent due to the low annual rainfall and lack of topographic relief. Drainage patterns consist of long, shallow valleys and draws extending from the edge of uplands such as the Mesa. The upland area south and west of the OD unit is drained by unnamed draws that are oriented southwest-northeast, have rectilinear drainage patterns, and appear to have no immediate outlet channel. Two of these intermittent streams converge approximately 3400 ft southwest from the perimeter fence of the OD unit, and the resultant single draw comes within 700 to 800 ft north of the OD area. Figure B-3 shows surface waters and drainage in the OD area.

Due to the low relief and close proximity to the intermittent stream located only 700 to 800 ft away, the OD unit is subject to potential flooding. Appendix B contains the 100-year floodplain

study that was conducted for the OD unit. Figure B1-2 in Appendix B provides a map delineating the 100-year floodplain boundary relative to the unit.

E-2d Precipitation Patterns [40 CFR 264.601(b)(4)]

The climate at the Melrose AFR is classified as semiarid. The downslope warming of air from the mountains to the west tends to modify and temper the air masses coming from the west and northwest. Winds from northwesterly direction blow downslope and enhance atmospheric ventilation; Whereas winds from a southerly and easterly direction blow upslope and lead to increased cloud formation and can result in precipitation.

As recorded at Cannon AFB, which is 25 miles east of the Melrose AFR, the average rainfall in the area is 15.2 in., most of which occurs as thunderstorms during summer months. Thunderstorms occur approximately 47 to 50 days per year. Individual monthly averages vary from 0.4 in. during winter months to 2.5 to 2.7 in. during July and August. The greatest monthly rainfall intensity was 11.4 in. recorded in July. The greatest amount of rainfall recorded in 1 day was 4.8 in.

Occasional winter snows occur in this area from the upslope movement of moist air from the Gulf of Mexico. Over a 36-year period, annual snowfall amounts of 20 in. or more have been recorded on several occasions. The record snowfall for a single storm is 19 in. Snow can occur as early as October and as late as May.

E-2e Groundwater Data [40 CFR 264.601(b)(5)]

Information on groundwater was previously discussed in Sect. E-1.

E-2f Proximity to Surface Waters [40 CFR 264.601(b)(6)]

The surface waters nearest the OD unit is the intermittent stream discussed in Sect. E-2 that drains to the northeast of the OD unit. There are no permanent surface waters within the Melrose AFR. The nearest permanent surface water is the Pecos River, which flows generally south through much of New Mexico and is approximately 12 miles west of the Melrose AFR. Tule Lake is a relatively large body of water for the area and is approximately 10 miles northeast of the facility.

E-2g Water Quality Data [40 CFR 264.601(b)(7) and (8)]

Surface water occurs at the Melrose AFR only after periods of heavy rainfall. During this time, intermittent streams may flow for a short period, and there may be some ponding of water within three dirt embankments near the east range access road. However, it is not believed that any water samples have been collected for analysis from surface waters at the Melrose AFR.

E-2h Assessment of Surface Water Migration Potential [40 CFR 264.601(b)(9) through (11)]

The potential for contaminants from OD operations to migrate into and through surface waters is very low, and several factors support this conclusion.

- The only surface water in the vicinity of the EOD area is a small, intermittent stream located 700 to 800 ft from the OD unit.
- In general, the wastes to be treated at the EOD area are hazardous primarily because of their explosive properties. The OD treatment processes conducted at the unit effectively eliminate the explosive characteristics of waste munitions.
- The nature of the waste munitions and residues following treatment have only slight or no solubility in water (see Table C-2). Therefore, transport of these contaminants should be minimal.
- The OD unit is surrounded by an outer berm that protects it from any flooding that may occur. The berm will also prevent or minimize off-site transport of any waste munition residues that could occur during periods of heavy rainfall.
- Previous site investigations in soil media have indicated only the presence of beryllium, which may be attributable to naturally occurring metallic ions in soils, and no explosive compound residues.

E-3 AIR ASSESSMENT [NMHWMR-7, Part V; 40 CFR 264.601(c)]

Emissions to the air of trace quantities of contaminants from the OD unit are the major pathways of concern. The managerial procedures used in the operation of the unit will minimize, to the extent possible, the release of any contaminants other than through emission of smoke and gases from the unit and some minor releases into ambient soils. The OD operations do not normally produce any measurable amounts of contamination other than particulates. These can be monitored through the soil sampling program (see Sect. C-2 and Appendix C, "Sampling and Analysis Plan") to determine the quantities and distribution, if any, of particulates and fallout.

E-3a Volume and Characteristics of the Waste [40 CFR 264.601(c)(2)]

The volume and characteristics of wastes to be treated at the OD unit are discussed in detail in Sect. C. The maximum allowable amount of explosive wastes that will be allowed for OD is 1000 lb NEW per demilitarization episode while the average maximum detonating amount per quarter is expected to be 1500 lb NEW. However, a maximum of 3000 lb NEW per quarter will be required to accommodate some of the large live bombs (with 990 lb NEW) requiring detonation. This quantitative limit helps ensure that no major sources of toxic emissions are released during OD

E-2h Assessment of Surface Water Migration Potential [40 CFR 264.601(b)(9) through (11)]

The potential for contaminants from OD operations to migrate into and through surface waters is very low, and several factors support this conclusion.

- The only surface water in the vicinity of the EOD area is a small, intermittent stream located 700 to 800 ft from the OD unit.
- In general, the wastes to be treated at the EOD area are hazardous primarily because of their explosive properties. The OD treatment processes conducted at the unit effectively eliminate the explosive characteristics of waste munitions.
- The nature of the waste munitions and residues following treatment have only slight or no solubility in water (see Table C-2). Therefore, transport of these contaminants should be minimal.
- The OD unit is surrounded by an outer berm that protects it from any flooding that may occur. The berm will also prevent or minimize off-site transport of any waste munition residues that could occur during periods of heavy rainfall.
- Previous site investigations in soil media have indicated only the presence of beryllium, which may be attributable to naturally occurring metallic ions in soils, and no explosive compound residues.

E-3 AIR ASSESSMENT [NMHWMR-7, Part V; 40 CFR 264.601(c)]

Emissions to the air of trace quantities of contaminants from the OD unit are the major pathways of concern. The managerial procedures used in the operation of the unit will minimize, to the extent possible, the release of any contaminants other than through emission of smoke and gases from the unit and some minor releases into ambient soils. The OD operations do not normally produce any measurable amounts of contamination other than particulates. These can be monitored through the soil sampling program (see Sect. C-2 and Appendix C, "Sampling and Analysis Plan") to determine the quantities and distribution, if any, of particulates and fallout.

E-3a Volume and Characteristics of the Waste [40 CFR 264.601(c)(2)]

The volume and characteristics of wastes to be treated at the OD unit are discussed in detail in Sect. C. The maximum allowable amount of explosive wastes that will be allowed for OD is 1000 lb NEW per demilitarization episode while the average maximum detonating amount per quarter is expected to be 2000 lb NEW. However, this amount may need to be exceeded if some of the large live bombs (with 990 lb NEW) require detonation. If such a circumstance arises, approval from NMED will be requested prior to detonation. This quantitative limit helps ensure that no major sources of toxic emissions are released during OD operations. To fairly and accurately gauge the

operations. ~~To fairly and accurately gauge the~~ potential impact to the environment of these operations, worst case conditions of OD of wastes are discussed in the following sections.

E-3b Reduction or Prevention of Emissions [40 CFR 264.601(c)(2)]

The detonation structure berm surrounding the OD unit will serve, to the extent possible, as a physical barrier for reducing emissions by limiting the projections of small debris and larger fragments that result from such operations. Typical detonations of ordnance items such as flares, 5.56mm ammunition, rocket motors, etc., produce only a very small amount of fragmentation because of the high intensity of the initiating charge. Thus, the proposed four-ft berm should be sufficient. However, a higher berm may be installed at a later date if a proper design can be achieved and funding is available.

E-3c Operating Characteristics [40 CFR 264.601(c)(3)]

The OD unit at the Melrose AFR currently operates on a quarterly or as-needed basis for the treatment of waste munitions. Almost all energetic materials are transformed into gaseous or particulate form in the OD treatment process. Operating procedures for OD activities are presented in Sect. D.

Emissions associated with the OD process are nearly instantaneous due to the nature of the treatment process. Total emissions and an analysis of potential receptor exposures are presented for typical treatment cases in Sect. E-3f. At this time, accurate emissions data are not available. The final report from emissions testing (i.e., Bang Box testing) conducted at the Dugway Proving Grounds in Utah is expected to become available in late 1993 or early 1994, at which time the emissions issue can be discussed with NMED. Until then, any air modeling to support air emissions characteristics would be premature and inaccurate.

OD operations will only be conducted under favorable meteorological conditions. As referenced under AFR TO 11A-1-42 in Appendix D and Sect. D, they will not be carried out during an electrical storm that approaches within 4 to 8 km (3 miles); during a sand, dust, or snow storm when OD uses an electrical firing system; or when wind velocity exceeds 15 mph.

E-3d Atmospheric, Meteorological, and Topographic Characteristics [40 CFR 264.601(c)(4)]

The OD unit at Melrose AFR is in relatively flat, gently sloping terrain. The topography at the OD area slopes to the northeast away from the 200-ft-high upland (the Mesa), which is approximately 1 mile to the south and west of the unit. The highest elevation within the range is approximately 4700 feet ($\pm$10 ft) NVGD, while the lowest elevation is approximately 4190 ft NVGD. There are no complex topographic features in the unit's vicinity.

No climatological data has been collected at the Melrose AFR. However, for a close comparison, data compiled at Cannon AFB (25 miles east of the range) can be substituted. The climate of the area is semiarid with hot, dry summers and mild winters. Average annual daily maximum temperatures for the area range from 47°F to 92°F with the average annual mean temperature of 60°F. Summer temperatures may reach above 100°F only occasionally, while minimum temperatures may be in the 20s during January.

The average lake evaporation rate for the Melrose AFR area is about 92 in./year.

Wind speed, frequency, and direction are important to air emission analysis. Based on meteorological data collected at Cannon AFB, winds in the east-central area of New Mexico are often gusty and can average 19 mph or higher. Based on a 10-year period, the prevailing surface wind direction at the range is from the west. These west winds occur mostly from October to May. During the warmer months, the winds tend to be from the south. The annual mean wind speed is approximately 7 knots (8 mph). Monthly wind averages from 5 knots (6 mph) to 9 knots (10 mph). The maximum recorded wind gust at the range is 73 knots (84 mph).

The atmosphere tends to be dispersive around the Melrose AFR area. The seasonal and annual average mixing heights can vary from 400 m in the morning to 4000 m in the afternoon. The afternoon mixing heights are typically greater during the spring and fall seasons. The morning mixing heights are generally low, due to nighttime heat loss from the ground producing surface-based temperature inversions. After sunrise, these inversions break up, and solar heating of the ground surface causes vertical mixing in the atmosphere.

E-3e Existing Air Quality [40 CFR 264.601(c)(5)]

Melrose AFR is in the Pecos-Permian Basin Interstate Air Quality Control Region. While there are no air monitoring sites positioned on or near the range, both Curry and Roosevelt counties meet the National Ambient Air Quality Standards (NAAQS). EPA reports that ambient concentrations of particulates and sulfur dioxides are lower than national standards, and that ozone, carbon monoxide, and nitrogen oxides (1) cannot be classified and (2) are better than promulgated standards. The area has not been designated as an Air Quality Maintenance Area for any of the criteria pollutants mentioned above.

Table E-3 shows the present pollution, listed by source, that originates on the Melrose AFR. These emissions have been occurring for the past few years and comprised a portion of the area's pollutant load when EPA ruled on the attainment status of the NAAQS. The air emissions released during OD operations consist primarily of organic and inorganic gases. Compared to the existing pollutants, emissions from the treatment of wastes munitions are negligible.

Table E-3. Current pollution emissions at the Melrose AFR, New Mexico

Source	Annual Hours	Fuel Flow (lb/hour)	Annual Fuel Consumption (X 1000 lb)	Pollutant Emission Rate lb/1000 lb fuel)					Pollutant Emisssions (lb/year)				
				CO	HC	NO_x	Part	SO_x	CO	HC	NO_x	Part	SO_x
Military Aircraft													
F-111D[a]	2,104	14,516	30,542	0.8	0.1	20.0	0.35	1.0	24,434	3,054	610,840	10,690	30,542
A-7[a]	527	8,419	4,437	1.8	0.2	21.0	0.67	1.0	7,987	887	93,177	2,973	4,437
F-4C[a]	23	17,859	411	2.2	0.2	8.9	2.2	1.0	904	82	3,658	904	411
HH-53BC[b]	19	2,856	54	2.4	0.9	23.3	2.9	1.0	130	49	1,258	157	54
F-111A[a]	7	14,516	102	0.8	0.1	20.0	0.35	1.0	82	10	2,040	136	102
Power Generating Sources													
60 kW Generator and power plant[c]	–	–	37	0.7	0.14	2.5	0.34	0.1	26	5	92	13	4
Vehicles[c]													
Gasoline-powered	–	–	21	64.0	7.86	9.1	1.1	0.23	1,340	165	191	23	5
Diesel-powered	–	–	119	6.3	1.0	4.62	0.33	0.62	752	120	550	39	74
Total									35,655	4,372	711,806	14,835	35,600

Reference sources:

[a]Aircraft Air Pollution Estimation, ACEE, CEEDO-TR-78-33, September 1978.

[b]Aircraft Engine Emissions catlog, R/S NAVAID WORK AC 13790-4, February 1976.

[c]Compilation of Air Pollutant Emission Factors, AP-42, 3rd Ed. August 1977.

E-3f Assessment of Air Migration Potential [40 CFR 264.601(c)(b) and (7)]

To assess the potential for contaminant migration via airborne routes, the types and quantities of emissions must be identified for the OD treatment methods as applied to routine waste streams. A search of available literature from explosives manufacturers reveals that there are some data in regard to detonation products of energetic materials. Emissions resulting from the combustion of explosive compounds from waste munitions typical of those that are currently treated at the OD unit are tabulated and found in Tables C1-1, C1-2, and C1-3 of Appendix C. The following discussion on detonation emissions is taken from EPA document AP-42.

Emissions from explosives detonation are influenced by factors such as explosive composition, product expansion, method of priming, length of charge, and confinement. These factors are difficult to measure and control in the field and are almost impossible to duplicate in a laboratory test facility. With the exception of a few studies in underground mines, most studies have been performed in laboratory test chambers that differ substantially from the actual environment. Estimates of emissions from explosives use must be regarded as approximations that cannot be made more precise because explosives are not used in a precise, reproducible manner.

Carbon monoxide (CO) is the pollutant produced in greatest quantity from explosives detonation. TNT, an oxygen-deficient explosive, produces more CO than most dynamites (which are oxygen balanced), but all explosives produce measurable amounts of CO. Particulates are produced as well, but such large quantities of particulates are generated in the shattering of the rock and earth by the explosive that the quantity of particulates from the explosive charge cannot be distinguished. Nitrogen oxides (both NO and NO_2) are formed, but only limited data are available on these emissions. Oxygen-deficient explosives are said to produce little or no NO_x; a small body of data exists to confirm this. Unburned hydrocarbons also result from explosions, but in most instances methane is the only species that has been reported.

By utilizing the estimated emissions rates in conjunction with the worst-case loading in the OD unit, worst-case emissions can be predicted. By inputting the emissions rates into the PUFF computer model, exposures of receptors can be calculated at various distances from the unit. The nearest off-site human receptor is greater than 40,000 ft from the OD unit.

E-4 POTENTIAL IMPACT ASSESSMENT [NMHWMR-7, Part V; 40 CFR 264.601(a),(b), and (c)]

E-4a Land Uses [40 CFR 264.301(a)(6)]

The OD range is within the central portion of the Melrose AFR impact area, which is itself centrally located within the entire range. The area is predominantly open grassland and is used mostly for cattle grazing and some crop raising. A land-use map of the Melrose AFR is presented in Fig. B-6.

E-4b Human Health [40 CFR 264.601(a)(8), 264.601(b)(10), and 264.601(c)(6)]

Due to the nature of the treatment operation, nearly all contaminant exposures will be due to atmospheric transport of gaseous and particulate compounds. Little or no health impacts from emissions are anticipated to occur either during the transportation, unloading, and stacking of waste munitions or during the actual treatment (detonation) of the waste ordnance. EOD personnel will wear appropiate personal protective equipment (PPE) while conducting these activities. All concentrations at the facility boundary are estimated to be well below the NAAQS standards. These standards are established as health-based criteria.

E-4c Vegetation and Wildlife [40 CFR 264.601(a)(9), 264.601(b)(11), and 264.601(c)(7)]

The Melrose AFR does include some agricultural use of lands for both cattle grazing and crop growing, and there are several species of wildlife that frequent the range, including pronghorn, prairie dogs, and others (see Fig. B-6). Prairie grass is the only vegetation that grows within the facility. However, no domestic animals (livestock) and cultivated crops are permitted within the range impact area where the OD unit is situated. Thus, no noticeable effects are anticipated on either plants or animals (both domestic and wild). There are no known endangered species in permanent residence at Melrose AFR.

As noted in Air Quality Criteria for Particulate Matter, most research has been performed on gaseous pollutants, with little done on particulates. Thus, the levels at which toxic response occurs from these materials are not well defined. However, predicted levels are less than 3% of documented levels needed to produce noticeable plant effects (i.e., soot-clogged stomata).

Plants are relatively insensitive to CO at the lower levels of concentrations that have been found to be toxic for animals. In experiments over 100 plant species were exposed to CO concentration ranging from 115,000 to 575,000 $\mu g/m^3$. Exposure time varied from 7 to 23 days. Concentrations of 115,000 $\mu g/m^3$ caused practically no growth retardation, suggesting that concentrations of CO needed to affect plant growth are considerably higher than those normally

encountered in ambient air. Therefore, no vegetation damage should occur as a result of predicted CO emissions.

Experimental results indicate that a minimum NO_x concentration of between 4000 to 9000 $\mu g/m^3$ for an 8-hour period is necessary to cause a 5% injury level for the most sensitive plants. This level is much greater than the peak ambient NO_x concentration projected for the EOD boundary. Therefore, no adverse impacts are anticipated as a result of NO_x emissions.

E-4d Other Environmental Impacts

E-4d(1) Airblast Limitations (30 CFR 816.67)

The OD area contained within the Melrose AFR is approximately 48,000 ft (~9 miles) west of the nearest public highway (New Mexico State Highway 267); 55,000 ft (~10.5 miles) south of the nearest railway (the Atkinson Topeka and Santa Fe Railway, which parallels U.S Route 60/84); and approximately 38,000 ft (7 miles) southwest of the nearest believed off-site inhabited building (the Hart Ranch, which is just north of Little Tule lake) (Fig. B-2). These distances exceed the recommended distances for OD of explosives on the ground as presented in Table E-4. This table gives the separation distances required to ensure that air blasts (also referred to as overpressures) to buildings will be less than 0.03 psig (140 dB) for detonations at the ground surface.

Table E-4 covers detonations up to 500 lb NEW, which is half the maximum amount (1000 lb NEW) that will generally be permitted for OD treatment during a single episode. Since OD operations will be performed in an open, grade-level bermed detonation unit representing unconfined conditions, such activity will present a considerably lesser hazard, particularly ground motion, and thus they should be well within the air blast and ground motion limitations prescribed for blasting operations by the Office of Surface Mining Reclamation and Enforcement (OSMRE). Under no conditions will air blast limits be allowed to exceed the maximum limits listed in Table E-5 at the location of any dwelling, public building, school, church, or community or institutional building outside the OD area. Given the remote location of the OD unit and the great distance to the nearest inhabited building, it is very unlikely that such limits would ever be exceeded.

E-4d(2) Ground Motion Limitations [30 CFR 816.67(d)]

OD operations will be performed in an open, bermed detonation unit and will also conform to OSMRE regulations for ground vibrations. Structures in the vicinity of the OD area will be protected from damage by complying with maximum allowable limits on the ground vibration. Table E-5 lists the maximum allowable ground vibration limits, which are not to be exceeded at the location of any dwelling, public school, church, or community or institutional building outside the OD area. These limits are expressed as the peak particle velocity at specified distances from a detonation or

Table E-4. Distances for the OD of explosives on the ground[a]

Quantity of explosives (not over)	Inhabited buildings		Public highways Class A to D		Passenger railway and public highways with traffic volume more than 3,000 vehicles/day		Separation from other OB units	
Pounds	No missile hazard	Missile hazard without barricade	No missile hazard	Missile hazard without barricade	No missile hazard	Missile hazard without barricade	No missile hazard	Missile hazard without barricade
1	730	730	325	325	480	480	6	12
2	920	920	410	410	600	600	6	12
5	1250	1250	550	550	820	820	6	12
10	1600	1600	695	695	1030	1030	8	16
20	1990	1990	875	875	1295	1295	10	20
50	2700	2700	1190	1190	1760	1760	14	28
75	3080	3080	1360	1360	2015	2015	15	30
100	3400	3400	1500	1500	2220	2220	16	32
150	3900	3900	1715	1715	2535	2535	19	38
200	4275	4275	1890	1890	2795	2795	21	42
400	5400	5400	2380	2380	3520	3520	27	54
500	5800	5800	2560	2560	3790	3790	29	58

Source: RCRA Guidance Manual for Permitting Commercial Explosives Industry Open Burning/Open Detonation Units, Institute of Makers of Explosives, 1989.

[a]This table is intended only for application to open detonation of commercial explosive materials. The distances stated in this table should be measured from the center of the unit, except for separations from other open detonation units, which are measured from the edge of the unit. Distances are in feet.

blasting area. Peak particle velocity, as measured by a seismograph, is the maximum velocity at which a particle of ground vibrates when excited by a seismic valve.

Table E-5. Maximum ground vibration (peak particle velocity)

Distance (D) from the blasting site, in feet	Maximum allowable peak particle velocity (Vmax) for ground vibration, in inches/second[a]	Scaled distance factor to be applied without seismic monitoring[b] (Ds)
0 to 300	1.25	50
301 to 5000	1.00	55
5001 and beyond	0.75	65

[a]Ground vibration shall be measured as the particle velocity. Particle velocity shall be recorded in three mutually perpendicular directions. The maximum allowable peak particle velocity shall apply to each of the three measurements.
[b]Applicable to the scaled-distance equation of Paragraph (d)(3)(1) of 30 CFR 816.67(d).

F. PROCEDURES TO PREVENT HAZARDS

The information provided in this section is submitted in accordance with requirements of NMHWMR-7, Parts V and IX, and 40 CFR 264.14, 264.15, 264.17, 264.33, and 270.140(b)(4) through (9).

F-1 SECURITY (NMHWMR-7, Part V; 40 CFR 264.14)

Cannon AFB and the Melrose AFR operations and maintenance contractor (Westar Corporation) incorporate the proper equipment and procedures to ensure (1) that public or livestock ingress and egress to the range is controlled and (2) that employees are protected from health hazards that result from contact with extremely hazardous operations. Details of these provisions are specified in the following sections.

F-1a Security Procedures and Equipment (40 CFR 264.14)

Melrose AFR is a U.S. government installation. Access is limited to personnel authorized by the Commander, 27th Fighter Wing, Cannon AFB. Cannon AFB is not requesting a security procedures and equipment waiver; therefore, the requirements of NMHWMR-7, Part V, and 40 CFR 264.14(a)(1) and (2) do not apply. Currently Cannon AFB contracts operations and maintenance of the Melrose AFR to Westar Corporation. Westar is responsible for all daily activities, including daily inspection of the range facilities and the OD area. Table F-1 outlines Westar's general responsibilities regarding hazardous waste management.

F-1a(1) 24-Hour Surveillance System [40 CFR 264.14(b)(1)]

The OD area at Melrose AFR is not protected by a 24-hour surveillance system. Access is controlled through the location of a fence around the unit and padlocked gates at the two entry points (Fig. B-3). The OD area is contained within the range boundaries. The EOD Flight of the Civil Engineering Squadron is responsible for all treatment operations conducted at the OD area. The munitions team chief assumes responsibility of all OD area safety when treatment is being carried out. Access to the area is controlled by the EOD safety supervisor.

The wastes are treated by demolition immediately after unloading at the OD treatment area. An inspection of the area is performed prior to all OD treatment episodes and immediately after a safety wait period (minimum of 2 hours) has elapsed after operations. No further actions are taken until after a cool-down period. Visual surveillance is maintained during OD operations.

Table F-1. Westar Corporation's contractual responsibilities

Required service	Standard	Method of surveillance
Environmental maintenance	A. Ensure that hazardous materials are removed from target vehicles prior to placing on range target area	Monthly checklist
	B. All hazardous materials shall be handled and disposed of in accordance with all federal, state, and local laws and regulations	Monthly checklist
Prepare and maintain daily events and maintenance logs	Prepare and maintain daily events log of all pertinent actions on range such as cleared area releases and fires. Prepare and maintain a log of all maintenance functions performed on the range	Daily checklist
Control of traffic in impact area	A. Restrict range entry on the primary access route to the weapons impact area and maintenance compound	Daily checklist
	B. Keep access gates to the impact area locked during bombing operations unless otherwise authorized by range control	Daily checklist
Reoccurring reports	Prepare recurring quarterly reports based upon information obtained from compilation of daily and monthly reports	Quarterly report
Perform maintenance to gates, fences, and signs	Inspect, repair, and maintain gates, fences, and signs as required to ensure a viable impediment to unauthorized access to both the Air Force range and the thermal treatment area	As required checklist
EOD disposal range and thermal treatment pit	Grade and clear an area to a radius of 500 ft from the center of the thermal treatment trench. This area shall be kept free of all combustible material and vegetation	Daily checklist

Appendix D presents TO 11A-1-42, which specifies that the number of personnel will be kept to a minimum consistent with each operation, but in no instance will there be less than two qualified munitions management personnel present.

While in the OD area, EOD personnel are in two-way radio contact with the Range Control Tower. A red flag is flown during treatment operations and is displayed at a height that provides visible warning from a safe distance at all points of access to the OD area. The flag is removed only after the OD area has been cleared and declared safe.

F-1a(2) Barrier and Means to Control Entry [40 CFR 264.14(b)(2)(i) and (ii)]

Melrose AFR has a 5-ft 3-strand barbed wire fence surrounding the entire facility. In addition, the OD area is completely surrounded by a 5-ft 5-strand fence and has two lockable gates that control vehicle access. The gates are closed and locked except when authorized EOD personnel are entering or exiting the area. Visual surveillance is maintained during all treatment operations.

F-1a(3) Warning Signs [40 CFR 264.14(c)]

Warning signs, legible from a distance of 25 ft are posted at 300-ft intervals around the OD area and at the access gates. These signs state, "DANGER - MUNITIONS AREA UNAUTHORIZED PERSONNEL KEEP OUT," and are printed in both English and Spanish.

To prevent accidental ignition of explosive material, AFR 127-100 (see Appendix D1-6) prohibits smoking within 50 ft of any motor vehicle or material handling equipment loaded with explosives items. Cannon AFB policy also prohibits smoking within 50 ft of operations involving explosives items.

F-1b Waiver [40 CFR 264.14(a)]

A waiver is not requested for the requirements in Sects. F-1a(1) and F-1a(2) regarding injury to intruders and violations by intruders.

F-2 INSPECTION SCHEDULE [NMHWMR-7, Part V and Part IX; 40 CFR 264.15 and 270.14(b)(5)]

F-2a General Inspection Requirements [40 CFR 264.15(a)(b) and 264.33]

A program has been established to inspect all components of the OD unit for malfunctions, deterioration, operator errors, and discharges that may cause or contribute to the release of hazardous waste/constituents to the environment. These inspections are performed at the OD area weekly as well as prior to and after each treatment operation so that corrective measures may be implemented

to minimize problems due to malfunctions or deterioration. Four Base agencies conduct inspection of the OD treatment area and include the following:

- Environmental Flight,
- Munitions Shop,
- EOD Flight, and
- Contractor (Westar Corporation) in charge of Melrose AFR operations and maintenance.

The specific delineation of responsibilities are described in Sect. F-2(a)2 below.

F-2a(1) Types of Problems [40 CFR 264.15(b)(3)]

The inspection checklists identify the types of problems (e.g., malfunctions or deteriorations) checked during inspections (see Tables F-1 and F-2 and Figs. F-1 and F-2). If a deficiency is noted during any inspection, the following basic actions will be taken.

1. Deficiency is noted on the appropriate inspection form or log book and annotated with the problem, the time the deficiency was noted, and any immediate actions required to correct the deficiency. If the finding is serious or requires remedial actions, the Base contracting office and/or the Environmental Management Flight are contacted.
2. Remedial actions, if required, are taken to correct the deficiency.
3. After correction of the deficiency, the actions taken and the date the deficiency was corrected are annotated and signed off on the appropriate inspections form or log book.

F-2a(2) Frequency of Inspection [40 CFR 264.15(b)(4)]

Inspections of all materials, security devices, safety equipment, and communications devices will be conducted, at a minimum, weekly as well as before and after each OD operation. Frequent inspection will determine equipment deteriorations and malfunctions. Logs of all findings and actions will be kept by munitions management personnel. These logs will be maintained for at least three calendar years from the inspection date. The following organizations conduct inspections pertaining to the OD area.

EOD Flight. Pre-operational and post-operational inspections of the OD area are conducted by EOD Flight personnel. Figure F-1 presents the typical inspection log used by EOD personnel. This form is presented for illustrative purposes; the actual format may change over time.

Contractor. Daily inspections of the fencing, treatment area, and signs surrounding the OD facility are conducted by Westar Corporation. These inspections are documented in their daily events log and periodically reviewed by the Cannon AFB Quality Assurance Evaluator. Westar also inspects the facility for standing water after a storm event. Figure F-1 presents the inspection log used by Westar. This form is for illustrative purposes; the actual format may change over time.

Currently the contract between Cannon AFB and Westar does not permit Westar to remove any standing water which, due to design and climatic conditions, is unlikely to occur. Future renewals of the contract will include a tasking to remove any standing water from the OD treatment area and proper disposal through DRMO, if necessary. Currently, if standing water is present, EOD personnel will be called to drain the facility. Until contract renewal occurs, Cannon AFB personnel will carefully monitor the area after rainfall events to prevent accumulation of standing water.

Munitions Shop. Daily inspections are performed on vehicles used to transport personnel and safety equipment and are recorded on the Operator's Inspection Guide and Trouble Reports, SF Form 1800 (Appendix F1-2). This form presents the checklist for inspecting safety and emergency equipment, security devices, structural equipment, communications equipment and mobile equipment. Vehicles used to transport munitions to be treated at the EOD area are inspected per AFR 127-100, Sect. 7-20, (Appendix D1-6).

Environmental Management Flight. Quarterly inspections are completed by the Environmental Management Flight to ensure compliance with hazardous waste regulations. Figure F-2 presents an example of the inspection form used. These inspections are completed in conjunction with inspections of all shops on Cannon AFB that generate hazardous waste or hazardous waste constituents.

F-2b Specific Process Inspection Requirements [40 CFR 264.15(b)(4) and 270.14(b)(5)]

Inspections of tanks, waste piles and impoundments, are not applicable, since none of these exist at the OD area. Although incidental land treatment may occur throuh natural processes at the OD area, this would also not require any process inspections.

F-2b(1) Container Inspection (40 CFR 264.174)

There are no containers at the OD area.

F-2b(2) Tank Inspection (40 CFR 264.194)

Tanks are not used at the OD area.

F-2b(3) Waste Pile Inspection [40 CFR 264.254, 270.14(b)(5), and 270.18(e)]

There are no waste piles at the OD area.

F-2b(4) Surface Impoundment Inspection [40 CFR 264.22(b), 270.14(b)(5), and 270.17(d)]

There are no surface impoundments at the OD area.

F-2b(5) Incinerator Inspection (40 CFR 264.347)

These are no incinerators at the OD area.

F-2b(6) Landfill Inspection [40 CFR 264.15(a), 264.303, and 270.21(d)]

The OD unit is not intended for landfull purposes, although wastes may be present in soils in small quantities following OD operations. Therefore, inspections under landfill standards are not required.

F-2b(7) Thermal Treatment-Monitoring and Inspection [40 CFR 264.347(a)(3)]

The OD facility does not have thermal treatment units equipped with emergency shutdown or associated equipment and, therefore, is not subject to the requirements of 40 CFR 264.347(a)(3).

F-2b(8) Miscellaneous Unit Inspection (40 CFR 264.602)

Inspections for releases of explosive ordnance constituents to the environment will be conducted by munitions management personnel at the OD area. The OD treatment unit will be inspected immediately prior to placement of ordnance wastes and immediately after appropriate safety wait periods that are required following treatment operation. Figure F-1 is an example of the checklist used for preoperational inspections.

Table F-2 includes a list of general inspection requirements, including items, anticipated problems encountered during inspections, and the frequency of these inspections. Inspection log sheets will be retained by Cannon AFB EOD personnel. Copies will be maintained for a minimum of three calendar years from the inspection date.

F-2c Remedial Actions [40 CFR 264.15(c)]

Inspections conducted prior to and after each OD treatment operation will reveal areas where remedial actions would be necessary. If an inspection reveals the need for remedial actions, Cannon AFB EOD personnel will initiate immediate actions to prevent further damage and to reduce the need for emergency repairs.

Scrap metal and debris is removed after each detonation and recovered as scrap metal for recycling. Sifting the soil for additional scrap will be accomplished when any accumulated scrap presents an operational or safety hazard.

Remediation of soils will be conducted if soil sampling conducted in accordance with the sampling and analysis plan in Appendix C indicates extensive soil contamination above site-specific action levels. This will be based upon acceptable explosive compounds and total metals concentration levels. This would be an interim measure coordinated with NMED to help minimize the potential spread of contamination. This action will be vital during facility closure to help facilitate a clean closure, to reduce the cost of closure, and to help determine trends in the location of contamination. The remediation will be conducted by EOD and CES personnel in proper protective equipment (depending upon sample results) utilizing heavy equipment or hand tools based on the extent of the contamination. If remediation is necessary, simple work and safety plans will be developed to provide guidelines for this interim remediation. Remediated soil will be drummed and disposed of through DRMO as a waste based upon the sampling results.

F-2d Inspection Log [40 CFR 264.15(d)]

Inspection log sheets contain location information, items inspected, dates and times of inspections, conditions at the time of the inspection, and dates and times of corrective actions taken. Figures F-1 and F-2 and Tables F-1 and F-2 present examples of inspection logs used by Cannon AFB.

F-3 WAIVER OF PREPAREDNESS AND PREVENTION REQUIREMENTS (NMHWMR-7, Part V and Part IX, and 40 CFR 264.32 and 264.35)

Cannon AFB does not request a waiver of the prevention and preparedness requirements under NMHWR-7, Part V.

F-3a Equipment Requirements [40 CFR 264.32(c) and (d)]

Equipment requirements necessary prior to and during any OD treatment operation, as well as during inspections following cool-down, will include internal and external communication equipment, emergency equipment such as first aid and spill control equipment, and mobile equipment. This following equipment is kept in the EOD shop at Cannon AFB and taken to the OD facility when needed. They are inspected for serviceability prior to use.

Figure F-1. OD unit inspection log

OD Thermal Treatment Facility	Date & Time of Inspection _____ Inspector(s) Name/Title _____ Weather Conditions _____

Weekly, Pre-operational, and Post-operational Inspection Checklist

Regulatory Authority 40 CFR Section	Requirement/Violation	Status		Remarks	Date and Nature of Repairs/Remedial Action
		Sat	Unsat		
264.14(c)	All warning signs posted (Daily and weekly)				
264.14(b)(2)(i)/(ii)	Gates, fencing, and berms secured and in good condition (Daily and weekly)				
264.172 and 264.173	Materials managed to prevent leaks and spills Explosives Ignition devices (fuel)				
264.15(b)(1) and 264.32	Safety, spill, and emergency equipment on-hand and working -Fire extinguishers -Personal protective (PPE) -Decontamination -First aid				
264.32(a)	Communication equipment on-hand and working (int/ext)				
CAFR 19-12	Facility clear of all debris -OD areas prepared according to specifications				
CAFR 136-18	Authorization documents on-hand and signed				
264.16(d)(1) & (2)	Personnel properly trained in EOD disposal activities				

Table F-2. General inspection requirements

Area/Equipment	Specific Item	Types of Problems	Frequency of inspection
Safety and emergency equipment	55-gal drums (steel, stainless steel)	Corrosion, structural damage	Monthly/prior to use
	Face shields and extra protective glasses	Broken or dirty equipment	Before/after use
	Disposal respirators	Out of stock, improper filters	Before/after use
	Fire extinguishers	In need of recharging	Before/after use
	First aid equipment and supplies	Items out of stock or inoperative	Prior to use
	Protective clothing (coveralls, gloves, and foot coverings)	Holes, normal wear and tear	Prior to use
	Emergency water supply	Vehicles and potable well nonoperational	Prior ot use
Security devices	Signs	Illegible	Daily
	Access gates	Locking mechanism jammed	Daily
	Fences	Tears, damage	Daily
Operating and structural equipment	Floor or foundation	Leaks	Prior to use
	Walls	Cracks	Prior to use
Communication	Radios	Power failure	Prior to use
Mobile equipment	Brakes	Worn pads, rotors	Prior to use
	Hydraulics	Leaking	Prior to use
	Trailer hitches	Loose, missing safety chains	Prior to use
	Running emergency lights	Burned out	Prior to use
	Horns/sirens	Inoperative	Prior to use

Figure F-2. Environmental Management Flight OD inspection log

OD Thermal Treatment Facility 27 CES/CEV	Date & Time of Inspection _____ Inspector(s) Name/Title _____ Weather Conditions _____	Page No. __ of 3

Quarterly Inspection Checklist

Regulatory Authority 40 CFR Part	Requirement/Violation	Status		Remarks	Date and Nature of Repairs/Remedial Action
		Sat	Unsat		
264.14(c)	All warning signs posted				
264.14(b)(2)(i)/(ii)	Gates, fencing, and berms secured and in good condition				
262.32	All container contents are clearly marked				
264.15(b)(1) and 264.32	Safety, spill, and emergency equipment on-hand and working				
	Fire extinguishers				
	Personal protective (PPE)				
	Decontamination				
	First aid				
262.34(a)(2)(3)	Labels clearly visible				
264.172 and 173	Containers managed to prevent leaks (no spills or leaks present)				
264.172	Containers are compatible with the material stored				

Figure F-2 (continued)

OD Thermal Treatment Facility 27 CES/CEV	Date & Time of Inspection _____ Inspector(s) Name/Title _____ Weather Conditions _____	Page No. __ of 3

Quarterly Inspection Checklist

Regulatory Authority 40 CFR Part	Requirement/Violation	Status		Remarks	Date and Nature of Repairs/Remedial Action
		Sat	Unsat		
264.17(b) and c)	Hazardous Waste containers are segregated into compatibility categories				
264.32(a)	Communication equipment on-hand and working (int/ext)				
CAFR 19-12	Facility clear of all debris				
	Pit clear				
	OD area prepared for receiving explosives				
CAFR 136-18	Authorization documents on-hand and signed				
265.52 and CAFB 19-12	Supervisors assigned				
262.73(a)(b)	Current inventory matches waste on-site				
262.43	Copies of Hazardous Waste Manifests onfile				
262.43	All records maintained for three/five calendar years				
265.15(b)(1)(2)	Written inspection schedule				
265.174	Weekly inspection log up-to-date				

Figure F-2 (continued)

OD Thermal Treatment Facility 27 CES/CEV	Date & Time of Inspection _____ Inspector(s) Name/Title _____ Weather Conditions _____	Page No. __ of 3

Quarterly Inspection Checklist

Regulatory Authority 40 CFR Part	Requirement/Violation	Status		Remarks	Date and Nature of Repairs/Remedial Action
		Sat	Unsat		
262.43	Environmental correspondence and inspection reports available				
262.34(a)(4) and 265.16	Personnel on roster trained in HAZCOMM				
	Personnel on roster trained in Hazardous Waste Management				
	Personnel trained in AFSC specialty codes				
265.16(b-e)	New personnel trained within 6 months of assignment				
	Other personnel with initial training have proper annual updates				
265.16	Personnel have written job titles and descriptions				
264.32(d)	Adequate water volume and pressure to operate required equipment				
262.11	Is any ash from OD tested? What are the results? If a hazardous waste, how is it managed?				
264	Do the Waste Analysis Plan and the analysis done of the manifested waste support the conclusions as to the RCRA identity of what was manifested and the LDR notices accompanying the manifests?				
CAFR 19-12	Was the Point of Contact informed of the inspection results?				

EMERGENCY INSTRUCTIONS FOR MOTOR VEHICLE DRIVERS AND INITIAL RESPONDERS

SECTION I - TO BE COMPLETED BY TRANSPORTATION OFFICE

1. THIS TRUCK IS CARRYING *(Detailed commodity description)*

2. TYPE OF PLACARD REQUIRED

3. UN ID NUMBER

4. BILL OF LADING NUMBER

SPECIFIC INSTRUCTIONS

5. IN CASE OF ACCIDENT/INCIDENT/BREAKDOWN

a. **SEND FOR FIREMEN, POLICE, AMBULANCE (CALL 911).**

b. SET BRAKE AND BLOCK VEHICLE TO PREVENT MOVEMENT.

c. PLACE NON-FLAME PRODUCING HIGHWAY WARNING DEVICES FOR TRAFFIC APPROACHING FROM EACH DIRECTION.

d. **DO NOT** ATTEMPT TO TOW LOADED VEHICLE.

e. **DO NOT** EXPOSE CARGO TO IMPACT, SPARKS, SMOKING, FLAMES OR HEAT OF ANY KIND.

f. **DO NOT** TOUCH CARGO UNTIL QUALIFIED PERSONNEL ARRIVE.

6. FIRE FIGHTING METHODS

a. **SEND FOR FIREMEN, POLICE, AMBULANCE (CALL 911).**

b. FIRES MAY BE FOUGHT UNTIL FLAMES REACH THE CARGO, AT WHICH TIME FIREMEN AND OTHERS WOULD BE WITHDRAWN TO THE FOLLOWING DISTANCES:

PUBLIC	FIREMEN
FEET	FEET

c. FIRE EXTINGUISHING INSTRUCTION *(X one)*

☐ WATER ☐ NO WATER

d. IF FIRE IS IN TRACTOR/CAB/ENGINE, SEPARATE FROM TRAILER.

7. SPECIFIC HAZARD INSTRUCTIONS/PRECAUTIONS *(X all that apply)*

	BLAST		EXPLOSION		FIRE
	INTENSE HEAT		FLASHBACK		REIGNITION
	INHALATION		RADIOACTIVE		OTHER *(Specify)*

8. SEE ATTACHED EMERGENCY RESPONSE GUIDEBOOK, NO. P5800.4, INSTRUCTIONS:

9. SEE FURTHER INSTRUCTIONS ON THE BACK OF THIS FORM. *(X block if applicable)* → ☐

10. PROMPTLY NOTIFY THE FOLLOWING:

a. **MUNITIONS AND EXPLOSIVES**
FOR DOD EMERGENCY ASSISTANCE ONLY:
CALL ARMY OPERATIONS CENTER COLLECT.
ASK FOR WATCH OFFICER: **202-697-0218**

b. **INHALATION HAZARDS**
TO INITIATE EMERGENCY RESPONSE ACTIONS, CALL:
_____
(To be completed by shipper based on specific commodity)

c. IN ALL CASES OF ACCIDENT/INCIDENT/BREAKDOWN INVOLVING MUNITIONS AND EXPLOSIVES, INHALATION HAZARDS AND OTHER HAZARDOUS MATERIALS, PROMPT NOTIFICATION MUST BE GIVEN TO:
SHIPPER _____
CONSIGNEE _____
MTMC HOTLINES:
EASTERN US: **800-524-0331** NJ ONLY: **800-642-1361**
WESTERN US: **800-331-1822** CA ONLY: **800-348-4639**

d. ADDITIONAL ASSISTANCE MAY BE OBTAINED FROM:
CHEMTREC: **800-424-9300**
NRC: **800-424-8802**

e. FOR SAFE HAVEN/REFUGE:
IMMEDIATELY CALL APPROPRIATE MTMC AREA HOTLINE.

f. IN THE EVENT OF DELAYS, NOTIFY THE SHIPPER IMMEDIATELY.

SECTION II - TO BE COMPLETED BY DRIVER

1. DRIVER PRECAUTIONS STATEMENTS *(Read before signing and X each item below)*

	a. I WILL COMPLY WITH ALL COMPANY RULES AND FEDERAL, STATE AND LOCAL REGULATIONS.		g. I WILL NOT ALLOW SMOKING OR USE OF FLAME OR SPARK PRODUCING EQUIPMENT WITHIN 50 FEET OF THE VEHICLE.
	b. I WILL KEEP AT LEAST 600 FEET FROM TRUCKS LOADED WITH OTHER HAZARDOUS MATERIALS AND A SAFE DISTANCE FROM OTHER VEHICLES WHILE OPERATING OVER PUBLIC ROADS.		h. I WILL PERFORM TIRE CHECKS AND CORRECTIONS EVERY TWO HOURS/100 MILES AND AT REST STOPS.
	c. I WILL HAVE A COPY OF THE ROUTE PLAN AND WILL USE DESIGNATED ROUTES, AVOIDING CONGESTED RESIDENTIAL AND BUSINESS ROUTES.		i. I WILL SELECT SAFE PARKING SPACES AT AUTHORIZED STOPPING LOCATIONS DESIGNATED BY THE STATE *(where designated)* AND/OR BY THE CARRIER.
			j. I WILL NOT GROUP TOGETHER WITH OTHER EXPLOSIVE VEHICLES AT STOPPING LOCATIONS.
	d. I WILL PROTECT THE PUBLIC FROM HAZARDS OF CARGO.		k. I WILL INSPECT VEHICLE AND MAINTAIN REQUIRED SURVEILLANCE.
	e. I WILL NOT PERMIT UNAUTHORIZED PERSONNEL TO RIDE IN OR ON THE VEHICLE.		l. I UNDERSTAND THE NATURE OF THE CARGO AND ACTIONS TO TAKE IN THE EVENT OF AN ACCIDENT, INCIDENT OR FIRE.
	f. I WILL NOT EXCEED POSTED SPEED LIMITS.		m. I WILL ENSURE THAT DUAL AND SUBSEQUENT DRIVERS RECEIVE, READ, UNDERSTAND AND SIGN THIS FORM.

2. SIGNATURE OF SHIPPER REPRESENTATIVE	3. SIGNATURE OF FIRST DRIVER	4. SIGNATURE OF SECOND DRIVER

12-30-1993 10:31AM FROM 27 CES/CEV CANNON AFB NM TO 97505827436 1 P.11

MOTOR VEHICLE INSPECTION
(TRANSPORTING HAZARDOUS MATERIAL)

GBL. NO.	ORIGIN	DESTINATION
NAME OF CARRIER		
NAME OF DRIVER		
DATE AND HOUR		
INSTALLATION/ACTIVITY		
DRIVER'S STATE PERMIT NO.		
MEDICAL EXAMINER'S CERTIFICATE AND DATE		

VEHICLE

TYPE OF VEHICLE	TRUCK NUMBER	TRAILER(S) NUMBER	SLEEPER CAB
☐ TRUCK ☐ TRUCK AND FULL TRAILER	ORIGIN	ORIGIN	☐ YES ☐ NO
☐ TRACTOR AND DOUBLE TRAILERS			VALID LEASE
☐ TRACTOR AND CLOSED SEMI-TRAILER	DESTINATION	DESTINATION	☐ YES ☐ NO
☐ TRACTOR AND FLAT-BED TRAILER			I.C.C. NUMBER

NOTE: All of the following items shall be checked on empty equipment prior to loading. Items with an asterisk(*) shall be checked on incoming loaded equipment.

ITEM NO.	CHECK APPROPRIATE COLUMN *(See reverse side for explanatory notes)*	ORIGIN SAT	ORIGIN UNSAT	DESTINATION SAT	DESTINATION UNSAT	REMARKS *(Explain unsatisfactory items; use reverse side if necessary)*
1.	ENGINE, BODY, CAB AND CHASIS CLEAN					
2.	STEERING MECHANISM					
3.	HORN OPERATIVE					
4.	WINDSHIELD AND WIPERS					
5.	SPARE ELECTRIC FUSES AVAILABLE					
6.	REAR VIEW MIRRORS INSTALLED					
7.	HIGHWAY WARNING EQUIPMENT					
* 8.	FULL FIRE EXTINGUISHER INSTALLED					
9.	LIGHTS AND REFLECTORS OPERATIVE					
10.	EXHAUST SYSTEM					
* 11.	LIQUID PETROLEUM GAS POWERED VEHICLES					
* 12.	FUEL TANK, LINE AND INLET					
13.	COUPLING DEVICES – KINGPIN LOCK					
* 14.	ALL BRAKES OPERATIVE					
* 15.	LANDING GEAR ASSEMBLY OPERATIVE					
16.	SPRINGS AND ASSOCIATED PARTS					
* 17.	TIRES					
18.	CARGO SPACE					
* 19.	ELECTRIC WIRING					
* 20.	TAIL GATE AND DOORS SECURED					
* 21.	FIRE AND WATER RESISTANT TARPAULIN					
22.	ANY OTHER DEFECTS *(Specify)*					

☐ APPROVED ☐ REJECTED *(If rejected give reasons on reverse under "Remarks". Equipment shall be approved if deficiencies are corrected prior to loading.)*

SIGNATURE *(of Inspector)* ORIGIN

SIGNATURE *(of Inspector)* DESTINATION

	ITEMS TO BE CHECKED PRIOR TO RELEASE OF LOADED VEHICLE	ORIGIN	DESTINATION
23.	MIXTURES OF MATERIAL PROHIBITED BY DOT REGS. ARE NOT LOADED ON TO THIS VEHICLE		
* 24.	LOAD IS SECURED TO PREVENT MOVEMENT		
25.	WEIGHT IS PROPERLY DISTRIBUTED AND VEHICLE IS NOT OVERWEIGHT		
* 26.	SEALS(S) APPLIED TO CLOSED VEHICLE, FIRE AND WATER RESISTANT TARPAULIN APPLIED ON OPEN VEHICLE		
* 27.	SPECIAL INSTRUCTIONS *(DD Form 836)* FURNISHED DRIVER		
* 28.	COPY OF VEHICLE INSPECTION *(DD Form 626)* FURNISHED DRIVER		
* 29.	PROPER PLACARDS APPLIED		
* 30.	SHIPMENT MADE UNDER DOT EXCEPTION 868		

SIGNATURE *(of Inspector)* ORIGIN	SIGNATURE *(of Driver)* ORIGIN
SIGNATURE *(of Inspector)* DESTINATION	SIGNATURE *(of Driver)* DESTINATION

DD Form 626, APR 78 REPLACES EDITION OF 1 JUN 72, WHICH IS OBSOLETE.

EXPLANATORY NOTES

REFERENCES IN ITALICS BELOW ARE THE PORTIONS OF THE DOT MOTOR CARRIER SAFETY REGULATIONS *(M.C.S.R.)* AND THE CODE OF FEDERAL REGULATIONS *(C.F.R.)*; DOD REQUIREMENTS ARE ESTABLISHED BY THE DEPARTMENT OF DEFENSE *(DOD)*

THE INSPECTOR MUST BE FAMILIAR WITH THE CITED PORTIONS OF THE SAFETY AND EXPLOSIVE REGULATIONS

MEDICAL EXAMINER'S CERTIFICATE – Certificate must not be over 24 months old. (M.C.S.R.)

Item 1, ENGINE, BODY, CAB, AND CHASSIS CLEAN (e.g., no excessive oil or grease) - Inspect to see that engine and compartment are clean, check cab to see that no excessive grease is on cab and cab floor is free of debris; check under cab and chassis for excessive grease. (DOD Requirement)

Item 2, STEERING MECHANISM – Inspect to see that steering mechanism is in good condition, in proper adjustment, correctly and securely mounted, and whether the steering gear case is leaking lubricant. Pay particular attention to the pitman arm and tie rod assembly to see that they are securely mounted and not bent out of normal shape. (DOD Requirement)

Item 3, HORN OPERATIVE – Inspect to see that horn is securely mounted and of sufficient volume to serve its purpose. (M.C.S.R.)

Item 4, WINDSHIELD AND WIPERS – Inspect to see that the windshields of the tractors are free from breaks, cracks or defects which would make operation of the vehicle unsafe, that the view of the driver is not obscured by stickers, that wipers operate properly, and that wiper blades are of proper kind and in good condition. Defroster operative when conditions require it. (M.C.S.R.)

Item 5, SPARE ELECTRIC FUSES AVAILABLE – Check to see that at least one spare fuse for each kind and type of installed fuse is carried on vehicle as a spare, or it is equipped with an overload protective device (circuit breaker) (M.C.S.R.)

Item 6, REAR VIEW MIRRORS INSTALLED – Every truck and truck tractor shall have installed two rear vision mirrors, one at each side, firmly attached and so located as to reflect to the driver a view of the highway to the rear along both sides of the vehicle. Mirrors must not be cracked or dirty. (M.C.S.R.)

Item 7, HIGHWAY WARNING EQUIPMENT – This equip- must include either three red electric lanterns in operating condition and two red flags or three red emergency reflectors and two red flags with standards adequate to maintain them in an upright position, or three red emergency reflective triangles or three bidirectional emergency reflective triangles. Flame producing equipment is prohibited. (M.C.S.R.)

Item 8, FULL FIRE EXTINGUISHER INSTALLED – Inspect to see that one full fire extinguisher having an Underwriters' Laboratories rating of 10 B:C or more is securely mounted and readily accessible. (M.C.S.R.)

Item 9, LIGHTS AND REFLECTORS OPERATIVE – (Head-Stop-Trail-Front and Rear Clearance) –Inspect all lights and switches, including clearance lights and turn signals; make sure they are not obscured by dirt or grease or have broken lens; high and low beam switch must be operative. EMERGENCY flashers operating on front and rear of vehicle. (M.C.S.R.)

Item 10, EXHAUST SYSTEM – Inspect the exhaust system to see that no part is so located as would be likely to result in burning, charring, or damaging the electrical wiring, the fuel supply, or any combustible part of the vehicle. The exhaust system shall discharge to the atmosphere at a location to the rear of the cab or, if the exhaust projects above the cab, at a location near the rear of the cab. (M.C.S.R.)

Item 11, LIQUID PETROLEUM GAS POWERED VEHICLES – Inspect LPG burning system to insure compliance with DOT standards prescribed in 49 CFR 393.69. (M.C.S.R.)

Item 12, FUEL TANK, LINE, AND INLET – Inspect tanks and fuel lines to see that they are in completely serviceable condition, free from leaks or evidence of leakage and surely mounted. Examine caps for defective gaskets or plugged vents. Inspect the filler necks to see that they are in completely serviceable condition, securely supported and not leaking at joints. (M.C.S.R.)

Item 13, COUPLING DEVICES - KINGPIN LOCK – Inspect without uncoupling to see that the fifth wheel rocker plate and bed are in good condition, properly assembled and mounted, and adequately lubricated. Kingpin lock must operate freely and properly, lock securely, and not show excessive wear. (M.C.S.R.)

Item 14, ALL BRAKES OPERATIVE – (Including hand brakes and air pressure warning devices) –Inspect for oil and grease leaks around drum flanges, pedal travel, air or vaccuum line leaks, moisture in tanks, compressor build up and governor cut off. Test for proper and adequate brake application. (M.C.S.R.)

Item 15, LANDING GEAR ASSEMBLY OPERATIVE – Landing gear assembly must be in good condition, correctly assembled, adequately lubricated, and properly mounted.

Item 16, SPRINGS AND ASSOCIATED PARTS – Examine visually the springs, suspension hanger mechanisms, torsion bar assemblies, and auxiliary parts such as U-bolts, shackles, center bolts and hangers, for breakage, improper adjustment, and, as appropriate, lack of lubrication. Air suspensions should not be leaking. (DOD Requirement)

Item 17, TIRES – Examine all tires for cuts, bruises, breaks, and blisters. All tires with cuts or injuries extending into the cord body and those worn smooth in the center of the tread are not acceptable. Insure that stones are removed from between duals. Tires must be properly matched on dual-equipped tractors and trailers. (M.C.S.R.)

Item 18, CARGO SPACE – Inspect to see that cargo space is clean and in good condition to prevent damage to lading from exposed bolts, nuts, screws, nails, or other inwardly projecting parts. Check floor to make sure it is tight and free of holes. Floors shall not be permeated with oil or gasoline. (C.F.R.)

Item 19, ELECTRIC WIRING – Electric wiring must be clean and properly secured, insulation must not be frayed or otherwise in poor condition. There must be no uninsulated wires or improper splices or connections. Wires and electric fixtures inside the body must be protected from the lading. (M.C.S.R.)

Item 20, TAILGATE AND DOORS ON CLOSED EQUIPMENT SECURED – Inspect to see that all hinges are tight in body. Check for broken latches and safety chains. Doors must close securely. (M.C.S.R.)

Item 21, FIRE AND WATER RESISTANT TARPAULIN – If shipment is made on open equipment, check to make sure the lading is properly covered with a fire and water resistant tarpaulin. Explosive material packed in fire and water resistant containers and transported on flat-bed vehicles are not required to be covered with fire and water resistant tarpaulins. (C.F.R.)

Item 22, ANY OTHER DEFECTS (Specify) – Self Explanatory.

Item 23, MIXTURES OF MATERIAL PROHIBITED BY DOT REGS. ARE NOT LOADED ONTO THIS VEHICLE – Check carefully to prevent loading of incompatible explosives. (C.F.R.)

Item 24, LOAD IS SECURED TO PREVENT MOVEMENT – Self Explanatory.

Item 25, WEIGHT IS PROPERLY DISTRIBUTED AND VEHICLE IS NOT OVERLOADED – Lading shall be distributed in accordance with the approved load plan, when available, or when not available, a plan agreed upon by the shipper and the carrier. The weight of the load shall not exceed the capacity of the vehicle established by the carrier. The gross axle weights and the gross vehicle weight shall not exceed the limits imposed by the states through which the vehicle will pass, as given to the shipper of the state(s) law requirements. (DOD Requirement)

Item 26, 27, and 28 – Self Explanatory.

Item 29, PROPER PLACARDS APPLIED – Four standard placards applicable to the load will be furnished the carrier and insure they are conspicuously displayed, one in front, rear, and each side. (C.F.R.)

Item 30, SHIPMENT MADE UNDER DOT EXCEPTION 868 – This item will be checked when a shipment is made under the provisions of DOT Exception 868. When checked, it signifies that the shipment was loaded in compliance with carrier's advice on maximum weight and that the driver is relieved from certifying to Items 23, 24, and 25. (DOD Requirement)

REMARKS

DD Form 626 Reverse, APR 78

12-30-1993 10:33AM FROM 27 CES/CEV CANNON AFB NM TO 9750582743 61 P.13

- Hand-held Motorola radio
- Chemical apron
- Leather gloves
- Rubber gloves
- Rubber boots
- Goggles
- Face shield
- Respirator
- Respirator cartridge
- 55-Gal barrel
- Broom
- Long handle shovel
- Dust pan
- First aid kit

F-3b Aisle Space Requirements (40 CFR 264.35)

Ordnance is not stored or stacked in piles at the OD unit; it is treated on-site almost immediately after unloading. If an emergency occurs, the OD unit will have sufficient space around it to permit the unobstructed movement of personnel and emergency equipment to any area of the facility. All access and internal roads at the OD area, as well as fire lanes around the perimeter of the OD area, are routinely maintained by the range contractor.

F-4 PREVENTIVE PROCEDURES, STRUCTURES, AND EQUIPMENT [NMHWMR-7, Part V and Part IX; 40 CFR 264.33 AND 270.14(b)(8)]

F-4a Transportation and Unloading Operations [40 CFR 270.14(b)(8)(i)]

Explosive ordnance is unloaded directly at the ground location for OD treatment operations. Unserviceable munitions are transported by an EOD vehicle in an explosive ordnance container to the unit where they are directly unloaded for demilitarization. EOD personnel are trained in the handling of waste munitions and take all precautions to minimize hazards during these activities.

During transportation, a primary and assistant operator should be assigned to each vehicle transporting explosives on public highways, roads, or streets. When transporting explosives, operators must observe the following safety rules.

A. Vehicles

- Ensure vehicles are in good condition. Inspect all vehicles intended for hauling explosives before loading explosives. Pay particular attention to protecting against any short circuits in the electrical system.

- When using vehicles with steel or partial steel bodies, install fire-resistent and nonsparking cushioning to separate explosives from the metal truck components.

- Do not load vehicles beyond their rated capacities when transporting explosives. Cover open-body vehicles with a fire-resistent tarpaulin.

- Do not carry metal tools, carbides, oils, matches, firearms, electric storage batteries, flammable substances, acids, or oxidizing or corrosive compounds in the bed or body of any vehicle.

- No smoking within 50 ft of any explosives.

B. Cargo (Explosives)

- Do not leave explosives unattended.

- Do not mix live and inert explosives unless necessary. If mixed, ensure all explosives are properly labeled.

- Do not permit anyone other than the primary and the assistant operators to ride on or in a truck transporting explosives.

- Do not fuel a vehicle while carrying explosives except in an emergency.

F-4b Runoff [40 CFR 270.14(b)(8)(ii)]

Runoff from the burn unit is highly unlikely because the unit is completely enclosed by an exterior flood control berm. Management practices used to preclude runon are discussed in Sect. D-9a(4).

F-4c Water Supplies [40 CFR 270.14(b)(8)(iii)]

OD operational structures will be constructed in a manner to minimize the potential for infiltration and/or contamination of water supplies. The OD unit will have embankments, and berms will be emplaced to divert water away from the unit. The denotation pad within the unit will have a sloping surface designed to drain water away from the unit and thus prevent any pooling within the bermed unit. The OD unit will be constructed to prevent or minimize the development of cracks, holes, or other openings and will thus ensure that infiltration that may occur is minimal. Furthermore, the unit will remain empty except during OD treatment cycles. Waste materials to be placed in the unit will be in solid form only and will not contain no free liquids.

A potable water well is located approximately 10,500 ft north of the OD treatment area. This well provides water for the facilities at the range and for emergency response actions.

F-4d Equipment and Power Failure [40 CFR 270.14(b)(8)(iv]

Melrose AFR is in a remote, sparsely populated location. There are no utilities; however, natural lighting is adequate for most operations unless emergency remediation is necessary. In this case, portable battery-powered lighting or generator carts are used. The munitions team chief is responsible for monitoring existing environmental conditions and making decisions concerning EOD operations.

F-4e Personal Protection Equipment [40 CFR 270.14(b)(8)(v)]

EOD personnel are specifically trained in OD treatment operations and the nature of the wastes do not usually require the donning of any PPE.

Detonators, initiators, and other electrically or mechanically actuated devices required for loading, unloading, operations, and egress will be carried in protective containers. These containers will be designed to prevent positive electrical contact and will be marked to identify the contents.

Smoking is prohibited in all areas containing exposed explosives. Any battery-operated lights must be approved for use by the U.S. Bureau of Mines.

F-5 PREVENTION OF REACTION OF IGNITABLE, REACTIVE, AND INCOMPATIBLE WASTES [NMHWMR-7, Part IX; 40 CFR 270.14(b)(9)]

F-5a Precautions to Prevent Ignition or Reaction of Ignitable or Reactive Wastes [40 CFR 264.17(a) and 270.14(b)(9)]

Cannon AFB EOD personnel are trained in handling various types of ordnance. The procedures used in handling reactive wastes, referenced in AF TO 11A-1-42, 60A-I-1-31, and AFR 127-100 (Appendix D), have been developed by the USAF and U.S. Army over many years. They ensure that the handling of these wastes will prevent accidental ignition or reaction of the wastes.

Reactive wastes, if encountered, are packaged securely, separated from incompatible items, secured on vehicles, and transported in accordance with DOT and USAF regulations.

Small ordnance placed in the OD unit is identified prior to demolition. The amount of the explosives in the OD unit will be kept to a maximum of 1000 lb NEW per episode. The OD unit is also inspected after operations to ensure that no reactive waste remain. If unexploded ordnance is found, it is placed into the OD unit and detonated again.

F-5b General Precautions for Handling Ignitable or Reactive Wastes or Accidentally Mixing Incompatible Wastes [40 CFR 264.17(b) and 270.14(b)(9)]

EOD personnel are trained in the demolition of munitions and do not treat ordnance which they are not familiar. Incompatible wastes are not commingled with ordnance and will not be mixed or transported to the EOD area.

In accordance with TO 11A-1-42, Paragraph 1-11 (Appendix D) the mixing of bulk explosives will not be permitted during treatment operations. Bulk explosives are explosives that are not enclosed within a container, shell, projectile, bomb body, or other mechanism. An example of bulk explosives is block demolition charges: prepackaged, explosive charges for general demolition operations such as cutting, breaching, and cratering.

The method of destruction utilized for each explosive is outlined in TO 11A-1-42. Based on DoD studies of military ordnance, DoD has developed a set of guidelines for the proper treatment of military munitions. These policy directives are standardized throughout DoD and outline methods for safe and expeditious ordnance treatment. The DoD TO 60-series outlines safe handling and destruction procedures for each type of munition in the DoD inventory.

F-5c Management of Ignitable or Reactive Wastes in Containers [40 CFR 264.176 and 270.15(c)]

Management of ignitable or reactive wastes in containers is discussed in Sect. C-1a.

F-5d Management of Incompatible Wastes in Containers [40 CFR 264.177(a) and 270.15(d)]

Ordnance is treated on-site immediately after unloading. No ordnance is stored at the Melrose AFR; therefore, this requirement is not applicable.

F-5e Management of Ignitable or Reactive Wastes in Tanks [40 CFR 264.198(a) and 270.16(j)]

Tanks are not used at the OD area; therefore, this requirement is not applicable.

F-5f Management of Incompatible Wastes in Tanks [40 CFR 264.199(a) and (b) and 270.16(j)]

Tanks are not used at the OD area; therefore, this requirement is not applicable.

F-5g Management of Ignitable or Reactive Wastes in Waste Piles [40 CFR 264.17(b) and 270.18(f)]

Waste piles are not used at the OD area; therefore, this requirement is not applicable.

F-5h Management of Incompatible Wastes in Waste Piles [40 CFR 264.17(b) and 270.18(g)]

Waste piles are not used at the OD area; therefore, this requirement is not applicable.

G. CONTINGENCY PLAN

The information in this section is submitted in accordance with the requirements for a contingency plan as contained in NMHWMR-7, Parts V and IX, and 40 CFR 264.50 through 270.14(b)(7). The Cannon AFB Contingency Plan, also referred to as the Cannon Spill Prevention and Response Plan, meets the requirements of NMHWMR-7 Part IX and 40 CFR 270.14(b)(7) and 264.50 through 264.56.

G-1 GENERAL INFORMATION [NMHWMR-7, Part V and Part IX; 40 CFR 264.50 through 264.56 and 270.14(b)(7)]

Cannon AFB has in place a published Contingency Plan (applicable portions of this plan are presented in Appendix G) that details procedures to be implemented at the Melrose AFR that minimize hazards to human health and the environment from fires, explosions, or any unplanned sudden or unsudden release of hazardous wastes or hazardous waste constituents to air, soil, or surface water.

A site plan and description of the thermal treatment facility is contained in Sects. B and D. A description of wastes disposed of is provided in Sect. C. The treatment process is described in Sect. D.

This plan is continually updated to incorporate changes from permit revisions, inadequate procedures, improvements in procedures, personnel changes, and other changes that may alter the plan. Copies of the Contingency Plan are available at the Base Fire Department and from the Base Civil Engineer (BCE), the Base Environmental Coordinator, EOD Site Managers, and the DRMO. Additional copies will be distributed to all interested or potentially affected parties.

G-2 EMERGENCY COORDINATORS [NMHWMR-7, Parts V and IX; 40 CFR 264.52(d), 264.55, and 270.14(b)(7)]

The emergency coordinator is the On-Scene Coordinator (OSC) specified under the Cannon Contingency Plan. The OSC will coordinate and direct control and cleanup efforts at the scene if an incident occurs involving the transportation, handling, or demolition of explosive waste items. The OSC will have the authority to utilize the expertise and resources of the Cannon Civil Engineering (CE) Cleanup Team and Fire Department Hazardous Materials(HazMat) Team in determining and performing response actions. In addition, all EOD technicians are trained to Level II First

Responders and are considered technical experts (Level IV) for munition incidents in accordance with 29 CFR 1910.120 and 40 CFR 311.

The deployment of the CE Cleanup Team and the Fire Department HazMat Team provides coordinated response to contain, control, recover, and restore the environment from any releases of hazardous constituents stemming from EOD activities. The CE Cleanup Team is responsible for site remediation and restoration. The primary emergency coordinator for spills of hazardous substances at Cannon AFB is the Support Group Commander. If necessary, the OSC will also contact outside agencies. Figures G-1 and G-2 list agencies to be contacted in case of an emergency involving hazardous waste constituents.

G-3 IMPLEMENTATION OF CONTINGENCY PLAN [NMHWMR-7, Part V; 40 CFR 264.52(a)]

The Contingency Plan will be implemented if an incident occurs involving an unplanned or inadvertent detonation or explosion that might threaten human health or the environment. Emergency coordinators have full authority to implement this plan. Depending on their degree of severity, potential emergencies that might require implementation of the Contingency Plan include:

- unplanned or out-of-control fire,
- unplanned detonation,
- diesel fuel spill, and/or
- flooding.

Nonsudden release of hazardous waste is not expected to occur at the Melrose AFR OD unit because there is no on-site storage of hazardous waste. The only residue temporarily remaining on-site will be debris that result from OD operations. In the unlikely event of extreme flood conditions, the heavy equipment used routinely by the range contractor and equipment on-base at Cannon AFB can be utilized in emergency situations for building up the exterior berm at the OD unit.

G-4 EMERGENCY RESPONSE PROCEDURES [NMHWMR-7, Part V; 40 CFR 264.52(a)]

G-4a Notification

Upon discovery of an emergency condition, the following actions should be taken. The order of actions will depend on the existing conditions.

- Alert EOD personnel and all other personnel within a 0.25-mile radius. The first person arriving on-scene is responsible for this action.
- Evacuate personnel not directly involved with OD operation and equipment if necessary and feasible.
- Notify Range Control (Range Contractor) by hand-held radio.
- In case of injury, begin first aid immediately and notify Melrose AFR EOD Control Center via radio communications.
- Notify Base Fire Department via radio communications. Upon arrival at the scene, the Senior Fire Officer (SFO) will evaluate the situation and quickly notify the Support Group Commander. The SFO will serve as the OSC and coordinate activities until the Support Group Commander arrives.
- Use all available means to contain the event when possible without undue risk of personal injury.
- Report to the acting OSC upon arrival of the CE Cleanup Team and Fire Department HazMat Team and provide assistance until response teams are fully operational.

When notifying the Base Fire Department, the following information should be provided if known or can be reasonably be determined. DO NOT wait until all information on the event is available.

- Name and telephone number of the individual reporting the incident,
- Location of the incident,
- Number of injured personnel and type of injuries, if any,
- Nature and extent of the incident, including the estimated quantity and the behavior of the released material,
- Time the incident occurred, and
- Any other pertinent information.

A comprehensive list of Cannon AFB personnel to be contacted during emergency response is presented in Table G-1. Table G-2 provides a list of other outside agencies to be contacted during emergency response.

Table G-1. Cannon AFB disaster control group phone list

Note: All base phone numbers are prefixed (505) 784 - ####.

Agency	Duty Phone	After Hours
Base Operations	2801	2801
Command Post	2253	2253
On-Scene Commander 27th Support Group Commander Col. Christopher L. Long 1755 Midway Circle CAFB	2761	5031
Base Civil Engineer 1st Alternate OSC Lt Col Timothy G. Wise 1753 Midway Circle CAFB	2008	8385
Base Fire Chief	4117 (off-base) 911 (on-base)	4117
CE Service Desk	2001/2002	2001/2002
Environmental Coordinator	2739/4639	2001/2002
Bioenvironmental Engineer	4063	4033
Disaster Preparedness	4177	2253
Security Police	4111	4111
Liquid Fuels Maintenance	2112	2001/2002
Staff Judge Advocate	2211	2253/4111
Public Affairs	4131	2253
Safety Office	2811	2253
Base Hospital (Emergency)	4033	4033
Explosives Ordnance Disposal	2902	2253
Maintenance Control Center	2541	2541
Vehicle Control Center	2775	2775
Weather Forecasters	2748	2305
Switchboard	3311	3311
Chaplain	2507	2253
Mortuary Affairs	2374	2253
Base Contracting	4520	2253

Table G-2. Local agency emergency response phone list

U.S. Environmental Protection Agency, Region VI Attn: Mr. Richard Mayer 1445 Ross Avenue Dallas, Texas 75202-2733 (214) 655-6776 (day)	New Mexico Environmental Department Office of Hazardous and Radioactive Waste Emergency Response Center 1190 St. Francis Drive Santa Fe, New Mexico 87502 (505) 763-3426
Clovis Fire Department Attn: Mr. Ron Edward 320 Mitchell Street Clovis, New Mexico 88101 Emergency: 911 Non-emergency: 763-5531	Portales Fire Department Attn: Capt. Steve Potest 301 South Avenue C Portales, New Mexico 88130 Emergency: 911 Non-emergency: 1-356-4406
Melrose Fire Department Attn: Mr. Keith Shaw 420 5th Street Melrose, New Mexico 88124 Emergency: (505) 253-4222	Clovis High Plains Hospital Emergency Department Attn: Ms. Diane Martin 2100 North Thomas Street Clovis, New Mexico 88101 All calls: 769-7169
Roosevelt Hospital Laboratory Attn: Mr. Bobby Lyons 1700 South Avenue O Portales, New Mexico 88130 All calls: (505) 356-4411	Curry County Sheriff Emergency: 911 Non-emergency 769-2335
Roosevelt County Sheriff Emergency: 911 non-emergency: 1-356-4404	New Mexico State Highway Patrol Emergency: 911 Non-emergency: 763-3426
Clovis Civil Defense 769-2381, ext. 502	Portales Civil Defense 1-356-4404

Note: [1]All phone numbers listed are from Cannon AFB. All phone calls made from Melrose AFR and the OB/OD area will be long distance. Calls from the AFR should use (505) and phone number or 1 and phone number.

[2]All numbers are 24-hour hotlines unless noted in text.

G-4b Evacuation Routes [40 CFR 264.52(f)]

If an unexpected fire or detonation occurs involving ordnance, personnel will proceed to a safe distance, upwind if possible. Established procedures will be followed as closely as possible; however, in specific emergency situations, the OSC may deviate from the procedures to provide a more effective plan for bringing the situation under control. The OSC is responsible for determining which emergency situations require evacuation.

In the event an evacuation from the OD thermal treatment area is necessary, the following actions will be taken by the OSC.

1. The signal for evacuation will be activated.
2. No further entry of visitors, contractors, or trucks will be permitted. All vehicle traffic will cease to allow safe exit of personnel and the movement of emergency equipment.
3. All personnel, visitors, and contractors will immediately leave through the exit gate.
4. No persons will remain or reenter the location unless specifically authorized by the OSC.
5. All personnel will be accounted for by their immediate supervisors, who will ensure that personnel remain together and proceed to a safe location away from the scene.

G-4c Containment and Control [40 CFR 270.14(b)(7) and 264.56(b)]

The OSC will notify the respective OD area control office and advise team members of safety reentry procedures.

G-4c(1) OD Unit

Detonation. If an unplanned detonation occurs, personnel will immediately withdraw to a safe distance and evaluate the situation. The OD will be permitted to cool and will be examined for the cause of explosion, the extent of damage, and the remedial action required. The minimum evacuation distance is 2,000 ft.

Fire. If a fire occurs outside the OD unit, the range fire station will respond and extinguish the fire. If necessary, Cannon AFB will be called upon for assistance with the option for mutual aid from Portales, Clovis, and Melrose fire departments. The OD area is contained within a 500-ft-diameter cleared area, and any fires should be confined to the cleared area. The firebreaks (i.e., unimproved dirt roads) surrounding the OD area will contain the fire if it goes beyond the cleared area.

G-4c(2) Ordnance Transportation Vehicle

Detonation. If an unplanned detonation occurs, personnel will immediately withdraw to a safe distance and evaluate the situation. Heavy-bodied trucks have been specifically chosen for this task since the risk from detonator firing is minimized by the truck body. The minimum evacuation distance is 2000 ft.

Fire. If a fire occurs involving a transport vehicle with ordnance on-board, an attempt to control the fire with available fire extinguishers may be permissible if the fire is initially away from the ordnance. If not, personnel will immediately withdraw to a safe distance (minimum of 2000 ft) and advise all appropriate authorities.

G-4c(3) Material Release

If a release occurs during transport of detonation residue from the OD unit to the DRMO on the main base, all solid wastes will be retrieved and properly containerized. The following safety precautions will be observed in handling potentially explosive waste.

1. Use nonsparking equipment.
2. Deposit waste only in approved containers.
3. Keep open flames and heat-producing devices away from explosive waste/scrap.

If a diesel fuel spill occurs during maintenance operations, shovels will be used to construct a dike around the spill to contain lateral movement. As much free liquid as possible will be returned to the container. The fuel-soaked soil will be excavated and transported to either the Cannon AFB landfarm or another approved location for further treatment and disposal. Environmental Management Flight or the Base Civil Engineer will be contacted for disposal information.

G-4c(4) Severe Weather Conditions

If severe weather conditions occur, operations will cease as directed by the EOD technician in charge and as designated in TO 11A-1-42 (Appendix D-1).

G-4c(5) Emergency Coordinator Measures

The emergency coordinator will employ the following measures to protect personnel and equipment at the emergency location.

1. Limit the number of personnel involved at the scene.

2. Insist on the use of PPE deemed necessary for the particular incident.

3. Evaluate the hazards and risks involved relative to life, safety, and property hazards and determine a safe operating mode.

4. Set up a command post at the scene and establish communications with the Melrose AFR operations control center.

5. Follow safe practices and procedures in handling the incident.

6. Coordinate with other qualified emergency response personnel to ensure that safety and health are not jeopardized. Note: Although response times for additional personnel to arrive on-scene may be lengthy, this does not preclude seeking the best information available while they are en route.

G-4c(6) Follow-Up Actions

Following containment and control of the emergency, the OSC will:

1. Start actions to collect, treat, and dispose of nonexplosive waste or other materials as appropriate. This will be a joint operation involving munitions management personnel, fire fighters, bioenvironmental engineering personnel, and outside contractors, if required.

2. Ensure that munitions management, fire, and safety personnel investigate the cause of the emergency and provide a technical report to the Cannon AFB commander within 72 hours.

3. Ensure that proper restoration actions begin as soon as possible after appropriate explosives decontamination procedures have been completed. This will be a joint operation between safety and civil engineering personnel for the USAF incidents. All decontamination actions will be documented; the records will be maintained permanently at the munitions management, safety, and real property offices.

4. Ensure that equipment repaired or replaced as a result of the incident is recertified, as necessary, prior to reuse.

G-5 EMERGENCY EQUIPMENT [40 CFR 264.52(e), 264.56(h)(2), and 264.56(i)]

The following equipment will be available for EOD activities. This equipment is stored at the EOD shop at Cannon AFB and taken to the OD facility when needed. Other equipment listed is available from the range contractor.

- Hand-held Motorola Radio
- First Air Kit
- Ambulance or first aid vehicle
- Fire extinguisher (two per EOD vehicle)
- Respirator with cartridge(s)
- Shovels (two per EOD vehicle)
- 55-gal barrel
- Chemical apron
- Leather and rubber gloves
- Rubber boots
- Goggles
- Face shield
- Front end loader
- Road grader
- Bulldozer
- Dump Truck
- Pickup trucks (two from contractor)

After an emergency event, all emergency equipment used for clean-up will be decontaminated or replaced. Equipment will be triple-rinsed using water or an appropriate decontaminant solution. All rinseate will be containerized. The third rinse will be analyzed for the appropriate chemical parameters to determine the presence of any hazardous constituents.

An inspection of all safety equipment will be conducted before operations resume. The Director of the NMED will be notified that post-emergency maintenance has been performed and that operations have resumed.

G-6 COORDINATION AGREEMENTS (NMHWMR-7, Part V; 40 CFR 264.37)

Cannon AFB is the primary action agency for contingencies occurring at the OD area. The OD area control, security police, and medical clinic cooperate on all such responses. Cannon AFB has an agreement for mutual aid in fire protection with the cities of Clovis, Portales, and Melrose, New Mexico (Appendix G). The Cannon AFB Disaster Preparedness Operations Plan (OPLAN 355-1) assigns responsibility of medical disaster operations to the USAF Hospital, Cannon AFB.

G-7 REQUIRED REPORTS [NMHWMR-7, Part V; 40 CFR 264.56(j)]

Any emergency event (fire, explosion, etc.) that requires implementation of the Contingency Plan will be reported in writing within 15 days to the NMED using a Pollution Incident Report. The reporting form for emergency events is shown in Fig. G-1.

In addition, as a tenant agency on Cannon AFB, DRMO has internal reporting requirements. A report must be filed for any of the following incidents:

- a fire,
- a chemical spill of more than 5 gal (or smaller volumes if acutely or highly toxic materials are involved),

- an injury except minor cuts and bruises,
- any damage due to a malfunction or operating error, and
- any "near miss" of the above that could have had serious consequences to either human health or the environment.

If hazardous waste is containerized and sent to DRMO for disposal, a form similar to Fig. G-1 will be used for this purpose and will be sent to DRMO-Memphis, Tennessee, and DRMO Support-Battle Creek, Michigan. The Environmental Coordinator will report all pollution incidents as necessary.

Figure G-1. Pollution incident report

Pollution Incident Report	**Page ____ of ____**
From: Environmental Management Flight 27 CES CEV Cannon AFB, NM 88103 (505) 784-2739/2146	To: New Mexico Environmental Department Hazardous and Radioactive Waste Bureau 1190 St. Francis Drive Santa Fe, New Mexico 87503
Name and Telephone of OSC:	Incident Report No. Init ____ 2nd ____ 3rd ____ Final ____ Other _____
	Incident Date & Time:
Notification Times to National Response Center, Regional, and state agencies:	
If additional space is required, use continuation sheets.	
1. Location of incident and nature of terrain. Include surface/subsurface drainage and relationship to any bodies of water.	
2. Weather conditions and how they affected response action.	

Figure G-1 (continued)

Pollution Incident Report	**Page ____ of ____**
3. Cause of incident.	
4. Type and estimated amount of pollutant and official size classification.	
5. Corrective action taken to eliminate pollution source.	
6. Corrective action taken to remove pollutant.	
7. Assistance Required.	

Figure G-1 (continued)

Pollution Incident Report	**Page ____ of ____**
8. Estimated completion date of remedial actions and anticipated effectiveness.	
9. Estimated quantity and disposition of spill material and contaminated soil.	
10. Confirmation that emergency response equipment is back in operation before resuming operations.	
11. Description of any problems encountered during implementation of Contingency Plan, and how the Plan will be modified to prevent the recurrence of the spill event.	
12. Anticipated or actual reaction by the news media and public.	
Signature of OSC or designee:	Date:

The following agencies must be provided response notification by the Environmental Coordinator if a pollution event occurs in accordance with the contingency plan:

1. U.S. EPA, Region VI
   1445 Ross Avenue
   Dallas, Texas 75202

   Emergency Response Center
   (212) 767-2666, DUTY PHONE MANNED 24 HOURS, 7 DAYS/WEEK

   OHMTADS - Oil/Hazardous Material Technical Assistance System
   (212) 456-6855, DUTY PHONE MANNED 24 HOURS, 7 DAYS/WEEK

2. U.S. Coast Guard National Response Center (CHRIS)
   1-800-424-8802, DUTY PHONE MANNED 24 HOURS, 7 DAYS/WEEK

3. CHEMTREC - Chemical Transportation Emergency Center
   1-800-424-9300, DUTY PHONE MANNED 24 H, 7 DAYS/WEEK

4. New Mexico Environmental Department
   Hazardous and Radioactive Waste Bureau
   P.O. Box 26110
   1190 St. Francis Drive
   Santa Fe, New Mexico 87502
   (505) 827-4308

   Emergency Response Center
   (505) 827-9329

5. U.S. Department of Interior - Bureau of Land Management
   224 Cruz Alta Road
   Taos, New Mexico 87571
   (505) 758-8851

6. National Response Center (NRC)
   1-800-424-8802

H. PERSONAL TRAINING

The information provided in this section is submitted in accordance with the requirements of NMHWMR-7, Parts V and IX, and 40 CFR 264.16 and 270.14.

H-1 OUTLINE OF TRAINING PROGRAM [NMHWMR-7, Parts V and IX; 40 CFR 264.16 AND 270.14(b)(12)]

Facility personnel who handle hazardous wastes must successfully complete a program of classroom instruction and/or on-the-job training prior to working with hazardous waste. This will prepare them to operate and maintain the facility/unit in a manner that ensures compliance with RCRA training requirements and NMHWMR. The 27th Fighter Wing Support Group Commander is responsible for ensuring that personnel at Cannon AFB and Melrose AFR receive proper and timely training. This responsibility has been delegated to the Environmental Management Flight of the Wing.

All U.S. Department of Defense (DoD) EOD personnel must attend the Explosives Ordnance School at Indian Head Naval Ordnance Station, Indian Head, Maryland. This is a single training point for all military personnel in the EOD career field. Senior EOD personnel also support this training with on-the-job training and close supervision. The school has been in operation for over 40 years and is the primary focal point for explosives operations within the U.S. government.

EOD personnel operating the OD unit also attend a training program for RCRA at Cannon AFB. This course covers all aspects of operating a RCRA-regulated unit. This is discussed further in Sect. H-1b. Appendix H presents the Specialty Training Standard (STS)-464X0 proficiency checklist, which is used to assess proficiency levels of EOD personnel. Handling of explosives shall be supervised only by the EOD Team Chief in accordance with AF TO 11A-1-42 and Memorandum of Instruction (MOI) 136-6. Training records will be kept until final closure of the facility.

H-1a Job Titles and Duties [40 CFR 264.16(d)(1) and (2)]

EOD supervisory personnel at Cannon AFB are directly responsible for the proper handling of explosive ordnance. The duties, responsibilities, and qualifications of these positions are as follows:

Air Force EOD Superintendent

- Responsibilities: Directs the operations at OD area at Melrose AFR. The EOD superintendent provides assistance and guidance on EOD and management at the OD area.

- Duties:

  — Plans, coordinates, and directs all EOD operations at Cannon AFB and Melrose AFR. Interprets regulations and develops necessary operating procedures as required. Determines requirements for manpower, space, and equipment and initiates actions required. Determines need for modifications to existing facilities and initiates action to improve economy, efficiency, safety, and physical security of operations. Develops appropriate requirements and initiates requests for work.

  — Establishes, directs, and conducts on-the-job training for explosive ordnance disposal personnel. Inspects and evaluates EOD disposal activities. Conducts periodic and special inspection activities to ensure compliance with policies, regulations, and TOs. Interprets inspection findings and recommends corrective action.

  — Maintains personal contact with local, state, and government agencies and military commands.

  — Assigns work to subordinate employees or supervisors based on priorities. makes decisions on work problems referred by subordinate supervisors. Ensures that workload and project responsibilities are specifically delegated and assigned to subordinates.

- Experience and Qualifications:

  — Knowledge of composition and characteristics of U.S. and known foreign explosive, incendiary, and nuclear ordnance, and basic electricity.

  — Qualification as an EOD technician.

  — Basic understanding of detecting, identifying, rendering safe, recovering, or destroying explosive, incendiary, or nuclear ordnance.

Air Force EOD Technician

- Responsibilities: Advises on technical issues involving EOD. The EOD technician supervises weapons-related functions to ensure that all activities are coordinated and performed as directed and required.

- Duties:

- Conducts technical area reconnaissance for the detection, identification, and removal of unexploded ordnance (UXOs). Renders UXOs safe by utilizing appropriate techniques, calculating and fabricating explosive charges, and planning and directing EOD disposal activities.

- Coordinates EOD disposal activities and movements with other military and civilian agencies. Prepares reports concerning EOD activities.

- Supervises related munitions and weapons functions. Establishes procedures and standards for the availability of supplies, tools, and equipment pertaining to EOD disposal. Monitors and determines the proper procedures for turn-in or disposal of unserviceable supplies, tools, and equipment.

• Experience and Qualification:

  - Knowledge of the composition and characteristics of U.S. and known foreign explosive, incendiary, and nuclear ordnance and basic electricity.

  - Experience in performance or supervision in rendering safe, removing, and destroying dangerous or unserviceable explosive ordnance and in decontamination activities.

  - Qualification in AFSC 46470 according to standards in AFR 35-1.

Air Force EOD Specialist

• Responsibilities: Performs EOD-related functions including reconnaissance, survey, removal, and disposal of UXOs.

• Duties:

  - Conducts removal operations for UXOs using special techniques. Operates and interprets RADIAC and other applicable detecting instruments for monitoring areas adjacent to UXOs suspected of containing toxic or radioactive contaminants.

  - Disposes of unserviceable munitions by burning or detonation. Neutralizes and disposes of improvised explosive devices. Renders safe, removes, and disposes of UXOs resulting from crashed or disabled aircraft and missiles.

  - Provides assistance to disaster preparedness officers in the detecting, monitoring, evaluating, and decontaminating of radioactive, chemical, or biological hazards.

- Experience and Qualification:

  — Knowledge of composition and characteristics of U.S. and known foreign explosive, incendiary, and nuclear ordnance and basic electricity.

  — Graduation from Phases I and II of the Naval Ordnance School at Indian Head Naval Air Station, Maryland, according to the standards of AFSC 46420/50.

  — Experience rendering safe, removing, or destroying hazardous or unserviceable U.S. explosive ordnance. Experience with foreign explosives is desirable.

H-1b Training Content, Frequency, and Techniques [40 CFR 264.16(c) and 264.16(d)(3)]

Training content, frequency, and techniques are discussed in the following sections.

H-1b(1) EOD Training Program [40 CFR 264.16(a)(2) and (3)]

The EOD training program is taught at Indian Head, Maryland, and is required for all EOD personnel within DoD. All personnel must pass the basic course, and supervisory personnel must pass two additional advanced courses.

All personnel working at Cannon AFB and Melrose AFR receive extensive on-the-job training in each task they are required to perform. Cannon AFB has developed a self-audit program to ensure personnel remain qualified in their assigned duties. A person may be evaluated at any time on a task specified in their AFSC. If the person fails to meet the task standards, he is decertified and sent for remedial training and reevaluation before working unsupervised on that task again.

The course outline for the basic course is as follows:

1. Explosive Ordnance Disposal Specialist/Technician Career Field
   A. Progression in career ladder 464X0
   B. Duties of AFSCs 46430/50/70

2. Security
   A. Communications security (COMSEC)
      (1) Classify information and use MAJCOM/SOA EEFIs
      (2) Prevent security violations
      (3) Observe security precautions

   B. Operations security (OPSEC)
      (1) Background and history of OPSEC
      (2) Definition of OPSEC
      (3) Relationship of OPSEC to other security programs including COMSEC, Information Security, and Physical Security

(4) Common OPSEC vulnerabilities
(5) OPSEC significance of unclassified data and procedures
(6) Specific OPSEC vulnerabilities of AFSC 464X0

C. Resources Security
(1) EOD publications
a. Storage requirements
b. Control/Access procedures
c. Destruction/Disposition requirements
(2) Protection of firearms and munitions
(3) Arming and use of force by USAF personnel

3. Air Force Occupational Safety and Health
A. The USAF safety program
B. Principles pertaining to:
(1) Ground safety
(2) Explosives and missile safety
(3) Nuclear safety
C. Investigate and report USAF mishaps

4. Publications
A. USAF publications
B. USAF TOs
(1) USAF TO system
(2) Use indexes (NI and RI)
(3) Locate desired information
(4) Use TOs when performing tasks
(5) Establish and maintain TO files
(6) Initiate TO improvement reports
(7) Requisition TOs

5. Participate in USAF Graduate Evaluation Program

6. Management
A. EOD unit management
(1) Organizational structure
(2) Functions and responsibilities
B. Inspection systems
C. Material deficiency reporting

7. Applied Principles of Physics
A. Properties of matter
B. Laws of motion
C. Simple machines
D. Measurement systems
(1) English

(2) Metric
(3) Convert from system to system

8. Fundamentals of Electricity
   A. Ohms Law
   B. Series Circuit
   C. Parallel Circuits

9. EOD Tools
   A. Maintain tools
   B. Handtools
      (1) Select proper tools
      (2) Use tools properly
   C. Special tools
      (1) Select proper tools
      (2) Use tools properly

10. Military Explosives (General)
    A. Identification
    B. Characteristics
    C. Effects

11. Destruction of Explosive Materials
    A. Demolition equipment
    B. Firing systems
       (1) Electric
       (2) Nonelectric
    C. Disposal procedures
       (1) Routine
       (2) Emergency
    D. Munitions residue
       (1) Inspect
       (2) Certify
       (3) Turn-in
    E. Environmental considerations
    F. Transport munitions

12. Render Safe Techniques
    A. Immobilize fuses
    B. Remove fuses by remote means
    C. Disable electrical components
    D. Disrupt firing trains
    E. Use shaped charge and demolition techniques

13. Chemical Warfare Agents
    A. Classification
        (1) Physical state
        (2) Tactical use
        (3) Physiological action
        (4) Persistency
    B. Use protective clothing and equipment
    C. Downwind hazards
    D. Use detection and identification kits
    E. Apply first aid/self aid procedures
    F. Use decontaminants and decontamination kits

14. Chemical Munitions
    A. Munitions characteristics
    B. Identification
    C. Seal and package leaking munitions
    D. Respond to incidents involving chemical munitions
    E. Transport hazardous chemical munitions
    F. Use disposal methods

15. Placed Munitions
    A. Land mines and fuses
        (1) Classification
        (2) Identification
    B. Booby traps and fuses
        (1) Classification
        (2) Identification
    C. Locate
        (1) Land mines
        (2) Booby traps
    D. Placed munitions and their fuse
        (1) Render safe
        (2) Disposal
    E. Placed munitions of foreign countries

16. Projected Munitions, Rockets, and Grenades
    A. Projected munitions and their fuses
        (1) Classification
        (2) Identification
        (3) Locate
        (4) Render safe
        (5) Disposal
    B. Projected munitions, rockets, and grenades of foreign countries

17. Dropped Munitions
    A. Bombs
        (1) Classification
        (2) Identification
        (3) Render safe
        (4) Disposal
    B. Bomb clusters and dispensers
        (1) Classification
        (2) Identification
        (3) Render safe
        (4) Disposal
    C. Fuses
        (1) Classification
        (2) Identification
        (3) Render safe
        (4) Disposal
    D. Dropped munitions of foreign countries

18. Aircraft Systems and Explosives
    A. Aircraft egress/weapons systems
        (1) Aircraft/egress
        (2) Gun systems
        (3) Release systems
        (4) Missile/rocket launching systems
        (5) Miscellaneous explosive-actuated devices
    B. Aircraft explosive devices
        (1) Locate
        (2) Render safe
        (3) Remove
        (4) Disposal

19. Pyrotechnics
    A. Classification
    B. Identification
    C. Render safe
    D. Disposal

20. Guided Missiles
    A. Classification
    B. Identification
    C. Propulsion systems
        (1) Identification
        (2) Characteristics
    D. Hazardous missile components and propellants
        (1) Identification
        (2) Render safe
        (3) Removal
        (4) Disposal
    E. Guided missiles of foreign countries

21. Nuclear Weapons
    A. Classification
    B. Identification
    C. Fusing and firing systems
    D. Nuclear weapons and hazardous components
        (1) Render safe
        (2) Disposal
    E. Use protective clothing and equipment
    F. Use equipment

22. RADIAC Instruments, Radiological Monitoring, and Radiological Hazards
    A. Principles of RADIAC instrument operation
    B. Use RADIAC instruments
    C. Perform operator maintenance on RADIAC instruments
    D. Compute stay times

23. Explosive Ordnance Reconnaissance
    A. Recognition of terrain changes due to UXO
    B. Locate, mark, and report UXOs
    C. Incident categories
    D. Determine hazard distance
    E. Safety requirements
    F. Protective works
    G. Technical intelligence
        (1) Use photograph equipment
        (2) Reporting

24. Access and Recovery
    A. Characteristics of soils
    B. Effects of weather on soils
    C. Methods of gaining access
    D. Performing field rigging and improvised hoisting
    E. Tie knots, bends, and hitches

25. Ranges
    A. Decontaminate ranges
        (1) Active
        (2) Inactive
        (3) Excess
    B. Proficiency/Demolition ranges
        (1) Establish
        (2) Maintain

26. Improvised Devices
    A. Improvised explosive devices
        (1) Identification
        (2) Gain access
        (3) Render safe
        (4) Disposal
    B. Radiography interpretation
    C. Improvised nuclear devices (IND)

H-1b(2) Annual RCRA Training [40 CFR 264.16(a)(2) and (3) and 264.16(d)(4)]

Annual RCRA training provided to all EOD personnel by the installation Environmental Management Flight is as follows:

1. Regulatory Overview
    A. RCRA—A Federal Act
    B. 1984 RCRA amendments
    C. Legal liability
    D. Enforcement program and the Federal Facilities Compliance Act

2. What is Hazardous Waste?
    A. Definition
    B. Identification of hazardous waste
    C. Solid wastes that are not hazardous wastes
    D. Listed waste
    E. Characteristic waste
    F. Mixtures and residues ("derived from" rule)

3. Hazardous Waste Generation
   A. Identification
   B. Waste analysis
   C. Sampling and analysis

4. Basic Management Practices
   A. General overview
   B. Accumulation of waste on-site
   C. Waste disposal options
   D. Recordkeeping
   E. Waste analysis report
   F. Manifesting
   G. Training

5. On-Site Management
   A. Generator responsibility
   B. Storage
   C. DOT hazardous materials table
   D. Packaging
   E. Marking, labeling, and placarding
   F. Generator transportation

6. Shipping Off-Site
   A. General obligations
   B. Uniform hazardous waste manifest
   C. Documentation

7. Spill Contingency and Emergency Response
   A. Hazard recognition and evaluation
   B. Basic response actions
      (1) Small spills
      (2) large spills
   C. Equipment
   D. Training
   E. Reporting requirements

8. Personal Safety and Protection
   A. Hazard recognition and evaluation
   B. Physical hazards
      (1) Ignitability
      (2) Corrosivity
      (3) Reactivity
      (4) Toxicity

C. Personal Protective Equipment
   (1) Respiratory protection
   (2) Protective gear for chemical hazards

9. Pollution Prevention
   A. AF Goals
   B. Reduction in hazardous waste generation
   C. Reduction in hazardous waste use

H-1b(3) Cannon AFB Training Program [40 CFR 264.16(a)(2) and (3) and 264.16(d)(4)]

Cannon AFB has developed a base-specific training program for all EOD personnel. The program consists of specific tasks associated with EOD operations at Cannon AFB and Melrose AFR. The topics are reviewed monthly as follows:

Month 1

A. Knowledge

1. AFOSH 127 Series: Ground safety standards pertaining to EOD.

2. Explosive Safety: Proper procedures for transportation, storage, and handling. Information includes safety standards associated with the OD area.

3. TO 11A-1-60: Familiarization with requirements of processing, inspecting, and turn-in of munitions residue to DRMO.

4. New Mexico Environmental Department: Familiarization with the OB/OD process and the environmental implications.

B. Task/Practical

1. Notification of Operation: Obtain proper signatures required to operate the OD area in accordance with Cannon Air Force Base Regulation (CAFR) 136-18.

2. OD Process: Withdrawal to a safe distance and area security.

Month 2

A. Task/Practical

1. Transportation: Preparation of hazardous waste manifest and transportation procedures. Includes loading, unloading, securing of explosives, placarding, and notification requirements.

2. OD Process: Placement of munitions, detonators, and initiators.

Month 3

A. Knowledge

1. TO 11A-1-42: Preparation of area and operational procedures defined by CAFR 136-18. Research and verification for each item that has been designated on an ADR.

B. Task/Practical

1. Processing ADR: Individual will work with Base Supply and equipment personnel in the break out and packaging of ADRs. Includes verification of ADR number to item and ensuring that nomenclature, quantity, and proper documentation are maintained.

2. OD Process: Clean and inspect area.

Month 4

A. Task/Practical

1. OD Process: Obtain permission to initiate OD.

Month 5

A. Task/Practical

1. Post Action: Inspect area for kickouts. Recover or perform procedures for item in place. Clean OD area and collect casings.

Month 6

A. Task/Practical

1. OD Process: Withdraw to a safe distance and area security.

2. Post Action: Inspect area for kickouts. Recover or perform procedures for item in place. Clean OD area and collect casings.

H-1c Training Director [40 CFR 264.16(a)(2), 264.16(c), and 264.16(d)(3) and (d)(4)]

The EOD superintendent is responsible for ensuring that assigned personnel receive adequate training in handling potentially hazardous waste. All personnel receiving training must have training documentation on file, either through AF Form 55 or unit automated systems. Training for civilians will be documented in accordance with AFR 40-410. If certificates are given to students who complete training, these too shall be kept in their training records.

At a minimum, the training records must state the student's name, job title and description, date and place trained, and the expected date of retraining. Records of previous and ongoing training courses are maintained at the Cannon AFB Civil Engineering Squadron training office.

H-1d Relevance of Training to Job Positions [40 CFR 264.16(a)(1)]

EOD supervisory personnel who are responsible if an emergency occurs have been trained in handling explosive ordnance and potentially hazardous waste and in responding to emergency situations. Each has attended the EOD course at Indian Head Ordnance School, Maryland.

H-1e Training for Emergency Response [40 CFR 264.16(a)(3)]

The Naval Ordnance Station training program ensures that personnel receive emergency response training. On-the-job training requires each person to read and understand various official publications, including but not limited to:

AFR 127-100	Explosive Safety Standards
AFOSH 127-66	General Industrial Operations
TO 11A-1-1	Ammunition Restricted or Suspended
TO 11A-1-42	General Instructions for Disposal of Conventional Munitions
TO 11A-1-46	Fire Fighting Guidance, Transportation and Storage, Management Data, and Complete Round Charts
TO 11A-1-53	General Instructions for Ammunition Color Coding, Identification of Empty and Inert Loaded Ammunition Items and Components, and Assignment of Version Numbers to Training and Dummy Ammunition Items
TO 11A-1-60	General Instructions for Inspection of Reusable Munitions Containers and Scrap Material Generated from Items Exposed to or Containing Explosives

TO 60 series	This series is common to all military services. Various titles regarding specific items containing explosive ordnance [e.g., TO 60B-2-2-11-4 (MK 106 Practice Bombs)]

H-2 IMPLEMENTATION OF THE TRAINING PROGRAM [NMHWMR-7, Part V; 40 CFR 264.16(b) and (c)]

All current EOD personnel and future employees assigned to handle hazardous materials and hazardous wastes will complete the training program described above within 6 months of their date of assignment. Refresher training for all personnel is conducted at a minimum annually.

I. CLOSURE PLAN, POST-CLOSURE PLAN, AND FINANCIAL REQUIREMENTS

This section is submitted in accordance with the requirements of 40 CFR 264.110 through 264.115, 270.14(b)(13), and 270.14(b)(15) through (18). Cannon AFB will also remain in compliance with all closure conditions as stated in the NMHWMR-7, Parts V and IX, regulations. Where federal and state requirements differ, the more stringent requirement will be met.

I-1 CLOSURE PLAN [NMHWMR-7, Part V and Part IX; 40 CFR 264.112 and 270.14(b)(13)]

This plan identifies the closure process to be employed at the Melrose AFR OD area at any point during the intended operating life or for closure at the end of the operating life for the OD treatment unit. The closure plan record copy will be maintained by the Environmental Management Flight at Cannon AFB, New Mexico, until closure is completed and certified by the permittee and signed by a professional engineer licensed to practice in New Mexico. This plan will be updated as necessary by issuing either page changes or new copies, as appropriate, to all plan addressees.

I-1a Closure Performance Standard (40 CFR 264.111)

This closure plan is designed to ensure that the munitions OD facility will not require further maintenance and controls, will minimize and eliminate threats to human health and the environment, and will prevent the escape of hazardous wastes, hazardous waste constituents, or waste decomposition products to soils, surface waters, groundwater, or the atmosphere. If there is evidence of any releases or leaks, samples will be taken and analyzed, drummed, and disposed of through DRMO or an approved Treatment, Storage, or Disposal (TSD) facility. Representative soil tests will also be conducted to determine concentrations of toxic metals and explosive compounds. The ultimate disposal of drummed material will depend on the results of the soil tests.

Because the OD operations will take place in a grade-level, earthen bermed unit, the unit will be adequately sampled, dismantled, and regraded. If the unit used is upgraded with concrete berms, then adequate decontamination of the structure will be conducted. If Cannon requests a permit modification that allows OB as a treatment process at a later date, the OB unit and all equipment used to perform the closure and that contact potentially contaminated soils will be decontaminated as detailed in Sect. I-1e.

I-1b Partial and Final Closure Activities [40 CFR 264.112(a)(1) and (b)(4)]

Partial closure of the Melrose AFR OD unit is not planned. In the event that future circumstances or designs force Cannon AFB to discontinue operations, the procedures for final closure will be followed. These procedures are discussed in Sect. I-1e.

I-1b(1) Maximum Extent of Unclosed Portions [40 CFR 264.112(b)(2)]

During operations, the maximum extent of the unclosed portions will be the OD unit.

I-1c Maximum Waste Inventory [40 CFR 264.112(b)(3)]

Current operating practice precludes the storage of hazardous wastes at the Melrose AFR OD area or anywhere on the range. For reasons of safety, waste munitions are treated as received or as generated. The quantity of waste munitions to be treated during the life of the facility depends on national defense policy as implemented by training requirements. The maximum amount of waste treated during a single OD event at any time during the life of the facility is 1000 lb NEW.

I-1d Schedule for Closure [40 CFR 264.112(b)(6)]

The OD area is necessary to maintain the mission of Cannon AFB. Due to this, closure of the OD area is not anticipated unless closure of Cannon AFB occurs.

I-1d(1) Time Allowed for Closure (40 CFR 264.113(a) and (b))

Table I-1 presents an estimated closure schedule that includes the time required for individual closure requirements and the total time to close the facility. Within 90 days after receipt of the final volume of hazardous waste, final closure activities will be initiated. Notification of intent to close will be submitted to the NMED RCRA Program Manager and the U.S. Environmental Protection Agency (EPA) Regional Administrator 180 days prior to beginning closure activities. Final closure will be supervised and certified by an independent professional engineer who is registered in the state of New Mexico.

I. CLOSURE PLAN, POST-CLOSURE PLAN, AND FINANCIAL REQUIREMENTS

This section is submitted in accordance with the requirements of 40 CFR 264.110 through 264.115, 270.14(b)(13), and 270.14(b)(15) through (18). Cannon AFB will also remain in compliance with all closure conditions as stated in the NMHWMR-7, Parts V and IX, regulations. Where federal and state requirements differ, the more stringent requirement will be met.

I-1 CLOSURE PLAN [NMHWMR-7, Part V and Part IX; 40 CFR 264.112 and 270.14(b)(13)]

This plan identifies the closure process to be employed at the Melrose AFR OD area at any point during the intended operating life or for closure at the end of the operating life for the OD treatment unit. The closure plan record copy will be maintained by the Environmental Management Flight at Cannon AFB, New Mexico, until closure is completed and certified by the permittee and signed by a professional engineer licensed to practice in New Mexico. This plan will be updated as necessary by issuing either page changes or new copies, as appropriate, to all plan addressees.

I-1a Closure Performance Standard (40 CFR 264.111)

This closure plan is designed to ensure that the munitions OD facility will not require further maintenance and controls, will minimize and eliminate threats to human health and the environment, and will prevent the escape of hazardous wastes, hazardous waste constituents, or waste decomposition products to soils, surface waters, groundwater, or the atmosphere. If there is evidence of any releases or leaks, samples will be taken and analyzed, drummed, and disposed of through DRMO or an approved Treatment, Storage, or Disposal (TSD) facility. Representative soil tests will also be conducted to determine concentrations of toxic metals and explosive compounds. The ultimate disposal of drummed material will depend on the results of the soil tests.

Because the OD operations will take place in a grade-level, earthen bermed unit, the unit will be adequately sampled, dismantled, and regraded. If the unit used is upgraded with concrete berms, then adequate decontamination of the structure will be conducted. If Cannon requests a permit modification that allows OB as a treatment process at a later date, the OB unit and all equipment used to perform the closure and that contact potentially contaminated soils will be decontaminated as detailed in Sect. I-1e.

I-1b Partial and Final Closure Activities [40 CFR 264.112(a)(1) and (b)(4)]

Partial closure of the Melrose AFR OD unit is not planned. In the event that future circumstances or designs force Cannon AFB to discontinue operations, the procedures for final closure will be followed. These procedures are discussed in Sect. I-1e.

I-1b(1) Maximum Extent of Unclosed Portions [40 CFR 264.112(b)(2)]

During operations, the maximum extent of the unclosed portions will be the OD unit.

I-1c Maximum Waste Inventory [40 CFR 264.112(b)(3)]

Current operating practice precludes the storage of hazardous wastes at the Melrose AFR OD area or anywhere on the range. For reasons of safety, waste munitions are treated as received or as generated. The quantity of waste munitions to be treated during the life of the facility depends on national defense policy as implemented by training requirements. The maximum amount of waste treated during a single OD event at any time during the life of the facility is 1500 lb NEW. The estimated inventory for the life of the unit is estimated to be 90,000 lbs NEW. This is derived from the estimated annual of 3000 lb NEW, multiplied by the estimated life of the unit (30 years).

I-1d Schedule for Closure [40 CFR 264.112(b)(6)]

The OD area is necessary to maintain the mission of Cannon AFB. Due to this, closure of the OD area is not anticipated unless closure of Cannon AFB occurs. The estimated life of the unit is 30 years. However, the current design and construction, combined with future upgrades makes the unit potentially viable for life of more than 30 years.

I-1d(1) Time Allowed for Closure (40 CFR 264.113(a) and (b))

Table I-1 presents an estimated closure schedule that includes the time required for individual closure requirements and the total time to close the facility. Within 90 days after receipt of the final volume of hazardous waste, final closure activities will be initiated. Notification of intent to close will be submitted to the NMED RCRA Program Manager and the U.S. Environmental Protection Agency (EPA) Regional Administrator 180 days prior to beginning closure activities. Final closure will be supervised and certified by an independent professional engineer who is registered in the state of New Mexico.

I. CLOSURE PLAN, POST-CLOSURE PLAN, AND FINANCIAL REQUIREMENTS

This section is submitted in accordance with the requirements of 40 CFR 264.110 through 264.115, 270.14(b)(13), and 270.14(b)(15) through (18). Cannon AFB will also remain in compliance with all closure conditions as stated in the NMHWMR-7, Parts V and IX, regulations. Where federal and state requirements differ, the more stringent requirement will be met.

I-1 CLOSURE PLAN [NMHWMR-7, Part V and Part IX; 40 CFR 264.112 and 270.14(b)(13)]

This plan identifies the closure process to be employed at the Melrose AFR OD area at any point during the intended operating life or for closure at the end of the operating life for the OD treatment unit. The closure plan record copy will be maintained by the Environmental Management Flight at Cannon AFB, New Mexico, until closure is completed and certified by the permittee and signed by a professional engineer licensed to practice in New Mexico. This plan will be updated as necessary by issuing either page changes or new copies, as appropriate, to all plan addressees.

I-1a Closure Performance Standard (40 CFR 264.111)

This closure plan is designed to ensure that the munitions OD facility will not require further maintenance and controls, will minimize and eliminate threats to human health and the environment, and will prevent the escape of hazardous wastes, hazardous waste constituents, or waste decomposition products to soils, surface waters, groundwater, or the atmosphere. If there is evidence of any releases or leaks, samples will be taken and analyzed, drummed, and disposed of through DRMO or an approved Treatment, Storage, or Disposal (TSD) facility. Representative soil tests will also be conducted to determine concentrations of toxic metals and explosive compounds. The ultimate disposal of drummed material will depend on the results of the soil tests.

Because the OD operations will take place in a grade-level, earthen bermed unit, the unit will be adequately sampled, dismantled, and regraded. If the unit used is upgraded with concrete berms, then adequate decontamination of the structure will be conducted. If Cannon requests a permit modification that allows OB as a treatment process at a later date, the OB unit and all equipment used to perform the closure and that contact potentially contaminated soils will be decontaminated as detailed in Sect. I-1e.

I-1b Partial and Final Closure Activities [40 CFR 264.112(a)(1) and (b)(4)]

Partial closure of the Melrose AFR OD unit is not planned. In the event that future circumstances or designs force Cannon AFB to discontinue operations, the procedures for final closure will be followed. These procedures are discussed in Sect. I-1e.

I-1b(1) Maximum Extent of Unclosed Portions [40 CFR 264.112(b)(2)]

During operations, the maximum extent of the unclosed portions will be the OD unit.

I-1c Maximum Waste Inventory [40 CFR 264.112(b)(3)]

Current operating practice precludes the storage of hazardous wastes at the Melrose AFR OD area or anywhere on the range. For reasons of safety, waste munitions are treated as received or as generated. The quantity of waste munitions to be treated during the life of the facility depends on national defense policy as implemented by training requirements. The maximum amount of waste treated during a single OD event at any time during the life of the facility ~~is 1500 lb~~ NEW.

I-1d Schedule for Closure [40 CFR 264.112(b)(6)]

The OD area is necessary to maintain the mission of Cannon AFB. Due to this, closure of the OD area is not anticipated unless closure of Cannon AFB occurs.

I-1d(1) Time Allowed for Closure (40 CFR 264.113(a) and (b))

Table I-1 presents an estimated closure schedule that includes the time required for individual closure requirements and the total time to close the facility. Within 90 days after receipt of the final volume of hazardous waste, final closure activities will be initiated. Notification of intent to close will be submitted to the NMED RCRA Program Manager and the U.S. Environmental Protection Agency (EPA) Regional Administrator 180 days prior to beginning closure activities. Final closure will be supervised and certified by an independent professional engineer who is registered in the state of New Mexico.

I-1b Partial and Final Closure Activities [40 CFR 264.112(a)(1) and (b)(4)]

Partial closure of the Melrose AFR OD unit is not planned. In the event that future circumstances or designs force Cannon AFB to discontinue operations, the procedures for final closure will be followed. These procedures are discussed in Sect. I-1e.

I-1b(1) Maximum Extent of Unclosed Portions [40 CFR 264.112(b)(2)]

During operations, the maximum extent of the unclosed portions will be the OD unit.

I-1c Maximum Waste Inventory [40 CFR 264.112(b)(3)]

Current operating practice precludes the storage of hazardous wastes at the Melrose AFR OD area or anywhere on the range. For reasons of safety, waste munitions are treated as received or as generated. The quantity of waste munitions to be treated during the life of the facility depends on national defense policy as implemented by training requirements. The maximum amount of waste treated during a single OD event at any time during the life of the facility is 1000 lb NEW.

I-1d Schedule for Closure [40 CFR 264.112(b)(6)]

The OD area is necessary to maintain the mission of Cannon AFB. Due to this, closure of the OD area is not anticipated unless closure of Cannon AFB occurs.

I-1d(1) Time Allowed for Closure (40 CFR 264.113(a) and (b))

Table I-1 presents an estimated closure schedule that includes the time required for individual closure requirements and the total time to close the facility. Within 90 days after receipt of the final volume of hazardous waste, final closure activities will be initiated. Notification of intent to close will be submitted to the NMED RCRA Program Manager and the U.S. Environmental Protection Agency (EPA) Regional Administrator 180 days prior to beginning closure activities. Final closure will be supervised and certified by an independent professional engineer who is registered in the state of New Mexico.

Table I-1. Estimated closure schedule

Activity	Days
Receive and treat final volume of waste	0 to 10
Submit schedule for closure	10 to 20
Contract for sampling	20 to 50
Soil sampling and analysis	50 to 80
Contract for Feasibility Study and/or Risk Assessment to determine best alternative treatment (BAT)	80 to 120
Review BAT with NMED (approval of closure plan)	120 to 150
Contract for selected closure option	150 to 180
Conduct closure activities including any additional sampling, soil removal, and soil stabilization	180 to 210
Submit closure certification/post-closure documentation	210 to 240
NMED issues closure certification (clean closure) or post-closure permit (non-clean closure)	240 to 270

I-1d(1)(a) Extensions for Closure Time [40 CFR 264.113(a) and (b)]

An extension for closure time is anticipated. If an extension is warranted, a petition for said extension will be submitted to the NMED RCRA Program Manager and/or the EPA Regional Administrator. This petition will identify the need for the extension, the status of the unit, and the actions to prevent threats to the environment or human health during the extension period. The written request must include a copy of the amended closure plan for review and approval by the NMED RCRA Program Manager and/or the EPA Regional Administrator.

I-1e Sampling Requirements [40 CFR 264.112(b)(4)]

As part of closure activities, the background and initial concentrations of hazardous constituents in the OD area will be compared with the final concentrations to determine the amount of hazardous constituents that may have been added to the soil during the operating life of the unit. Based on the results of the analysis, NMED will determine whether additional testing is necessary to achieve clean closure. The parameters for analysis include toxic metals and explosive compounds.

Appendix E presents sampling results of the background and baseline concentrations of hazardous constituents at the OD area.

I-1e(1) Statistical Analysis Requirements (40 CFR 264 Appendix IV)

To provide statistical comparisons for evaluating analytical data, quantitative analysis will be performed using Cochran's Approximation to the Behrens-Fisher Student's t-Test. For any set of data (X_1, X_2, . . ., X_n), the mean is calculated by:

$$\overline{X} = \frac{X_1 + X_2 t \ . \ . \ . \ + X_n}{n}$$

and the variance is calculated by:

$$s^2 = \frac{(X_1 - \overline{X})^2 + (X_2 - \overline{X})^2 + (X_n - \overline{X})^2}{n-1}$$

where "n" denotes the number of observations in the set of data.

The t-test uses these data summary measures to calculate a t-statistic (t^*) and a comparison to calculate a t-statistic (t_c). The t^* value is compared to the t_c value, and a conclusion is reached about whether there has been a statistically significant change in any indicator parameter. The t-statistic for all parameters except pH and similar monitoring parameters is:

$$t^* = \frac{\overline{X}_M^2 - \overline{X}_B^2}{\sqrt{\frac{S_M^2}{n_m} + \frac{S_B^2}{n_b}}}$$

If the value of this t-statistic is negative, then there is no significant difference between the monitoring data and the background data. However, significantly small negative values may be indicative that the assumption made for the test validity failed, or that errors were made in collecting the background data.

The t-statistic (t_c) against which t^* will be compared necessitates finding t_b and t_m from standard (one-tailed) (see Table I-2) where,

t_b = t-tables with (n_b-1) degrees of freedom at a 0.05 level of significance
t_m = t-tables with (n_m-1) degrees of freedom at a 0.05 level of significance

Finally, the special weightings W_b and W_m are defined as:

$$W_b = \frac{s_b^2}{n_b} \qquad W_m = \frac{s_m^2}{n_m}$$

and so the comparison t-statistic is:

$$t_c = \frac{W_b t_b + W_m t_m}{W_b + W_m}$$

The t-statistic (t*) is now compared with the comparison t-statistic (t_c) using the following decision rule:

1. If t^* is equal to or larger than t_c ($t^* \geq t_c$), then conclude that there most likely has been a significant increase in this specific parameter.

2. If t^* is less than t_c ($t^* < t_c$), then conclude that most likely there has not been a change in this specific parameter.

The t-statistic for testing pH and similar monitoring parameters is constructed in the same manner as previously described except that the negative sign (if any) is discarded and the caveat concerning small negative values is ignored. The standard (two-tailed) tables are used in the construction t_c for pH and similar monitoring parameters. Comparison of t^* and t_c follow the same decision rules listed above.

A further discussion of the test method may be found in *Statistical Methods* (6th Edition, Sect. 4.14) by G.W. Snedecor and W.G. Cochran.

I-1f Inventory Disposal, Removal, or Decontamination of Equipment [40 CFR 264.112(b)(4), 264.112(e), and 264.114]

There will be no inventory because waste is not stored on-site. However, a final detonation will be scheduled for munition items from Cannon AFB to allow time to find an alternative location or method of disposal once closure begins.

Table I-2. Standard T-Tables 0.05 level of significance

Degrees of Freedom	t-values (1-tail)	t-values (2-tail)
1	6.3141	2.706
2	2.920	4.303
3	2.353	3.182
4	2.132	2.776
5	2.015	2.571
6	1.943	2.447
7	1.895	2.365
8	1.860	2.036
9	1.833	2.262
10	1.812	2.228
11	1.796	2.201
12	1.782	2.179
13	1.771	2.160
14	1.761	2.145
15	1.753	2.131
16	1.746	2.121
17	1.740	2.110
18	1.734	2.101
19	1.729	2.093
20	1.725	2.086
21	1.721	2.080
22	1.727	2.074
23	1.714	2.069
24	1.711	2.064
25	1.708	2.060
30	1.697	2.042
40	1.684	2.021

The objective of closure of the facility will be for clean closure where there will be no further need for maintenance and/or monitoring of the facility. This objective will be demonstrated through closure sampling and analysis. A sufficient number of samples will be collected and analyzed to adequately demonstrate the presence of any waste constituents resulting from OD operations. To ensure that the entire area potentially affected by treatment residues and waste debris is properly characterized, a minimum of three discrete (grab) samples will be collected. Sampling locations will be chosen as specified in the Sampling and Analysis Plan in Appendix C. The samples will be analyzed for explosive compounds and toxic metals listed in Table C-4. The results will be compared to the results of the background and baseline investigations conducted for the unit. Soil with contamination higher than the background concentrations found in the initial investigation will be removed and disposed of at a permitted hazardous waste disposal facility. Soil will be excavated until sampling shows that the contaminated soil has been removed; the area will then be backfilled with clean soil and regraded. An alternative to this would be the placement of a permanent cap over the site. The final decision will be made after post-sampling has been completed.

All decontamination and removal equipment will be washed with detergent and triple rinsed with water or shipped off-site to a permitted hazardous waste disposal facility. The final rinse water will be collected, and if it meets the decontamination criteria listed above, the equipment will be considered clean.

All hazardous liquids and solids generated as a result of closure activities will be stored the Cannon DRMO prior to shipment to an authorized disposal facility using an authorized hazardous transporter.

A field notebook will be maintained to record all sampling activities. The data and the time sampling is conducted will be recorded, as well as the sample identification number, the analysis requirements, and the laboratory conducting the analyses.

Appropriate safety precautions will be taken while sampling. Personnel will use PPE as deemed necessary. Additional equipment to be used in sampling operations include a small auger for excavation, 1-qt glass containers, 40-mL glass vials, teflon-sealed plastic lids, a small trowel, and gummed labels for sample identification. The sample vials will be cleaned by washing them in detergent and rinsing with organic-free water. The auger will be cleaned after taking each sample.

Collected samples will be placed in vials and sealed. Each sample will be labeled with a site-identification number, a sample number, and the date collected. Samples will be delivered to an approved testing facility within 72 hours of collection.

Custody of the samples obtained at the Melrose AFR OD area will be recorded on a chain-of-custody form. Similar forms will be used at the laboratory facility. A form listing the number of samples, the type of sample and location, and the sample identification numbers will be prepared. The analytical laboratory will confirm receipt of the samples by matching the shipment with the list on the form.

I-1g Financial Requirements for Closure (40 CFR 264.142 and 264.143)

Cannon AFB and Melrose AFR are facilities that are owned and operated by the federal government and, as such, are exempt from the financial requirements for hazardous waste facilities specified under 40 CFR Subpart H. This exemption includes 264.142, "Cost Estimate for Closure," and 264.143, "Financial Assurance for Closure."

I-2 POST-CLOSURE PLAN (NMHWMR-7, Parts V and IX; 40 CFR 264.603, 264.118, and 264.310)

This section is provided in the event that contaminated soils or groundwater cannot be completely removed or decontaminated (i.e., clean closure cannot be achieved) during closure activities, as specified under 40 CFR 264.603, and will remain at the site after closure. The post-closure plan is based on the general requirements of 40 CFR 264.118 and the performance standards for landfills specified under 40 CFR 264.310.

I-2a Post-Closure Care and Use of Property

I-2a(1) Post-Closure Care Period [40 CFR 264.117(a)(1)]

The post-closure care period for the OD unit will begin after the completion of closure of the OD unit and will continue for 30 years after that date. If it is necessary to either shorten or lengthen the post-closure care period, steps will be taken to implement the proper procedures for permit modification in accordance with 40 CFR Parts 124 and 270.

I-2a(2) Post-Closure Security [40 CFR 264.14(b)]

If hazardous wastes remain exposed after completion of partial or final closure, security that was used for the management of hazardous wastes will be provided during the post-closure period for the OD area. Security for the facility will consist of the following:

- A 24-hour surveillance system that provides continuous monitoring of the closed portion of the facility,

- A natural barrier such as a chain link or barbed wire fence that completely surrounds the closed portion of the facility and prevents the unauthorized entry of persons or livestock, and

- Entry to the closed portion of the facility will be maintained with the use of a gate or other entrance controls.

The facility will be clearly posted with signs that state, "DANGER—UNAUTHORIZED PERSONNEL KEEP OUT." These signs will be posted at all entrances to the closed portion of the facility and at other locations so as to be seen from any approach to the closed area. The legend must be written in both English and Spanish and must be legible from a distance of at least 25 ft.

I-2a(3) Post-Closure Use of Property

The post-closure use of property following partial or final closure of the facility will not be allowed if such use results in the disturbance of the integrity of the final cover, liner(s), or any other components of the containment system or the function of the facility's monitoring system that may have been installed. Post-closure use resulting in such disturbance will be allowed only in accordance with the provisions of 40 CFR 264.117(c)(1) or (2).

I-2b Post-Closure Contact

The name, address, and phone number of the person or office to contact for the EOD hazardous waste site during the post-closure period is listed below. An updated post-closure plan will be maintained with the contact during the post-closure period.

Installation Commander
27 FW CC
Cannon AFB, NM 88103-5000
(505) 784-2727

I-2c Post-Closure Care Monitoring (40 CFR 264.602)

Monitoring during the post-closure care period will consist of groundwater monitoring. Post-closure care monitoring will be employed to determine whether there have been any releases of hazardous wastes or hazardous constituents from any contaminated soils that may remain in place following closure. Groundwater monitoring will use the existing monitoring well installed at the OD area. Monitoring reporting requirements that are applicable to the unit during its active life will be followed during the post-closure period.

I-2d Post-Closure Final Cover Requirements (40 CFR 264.310)

If determined to be necessary at final closure of the OD facility, the closed portions of the area must be provided with a final cover that is designed and constructed to (1) provide long-term minimization of liquid migration through the closed unit, (2) function with minimal maintenance, (3) promote drainage and minimize erosion or abrasion of the cover, (4) accommodate settling and subsidence to maintain the cover's integrity, and (5) have a permeability less than or equal to the permeability of any bottom liner system or natural subsoils present.

The final cover will be maintained to ensure its integrity and effectiveness. Any necessary repairs will be performed on the cap to correct the effects of settling, subsidence, erosion, or other detrimental events. Additionally, the final cover will be protected from erosion or other damaging effects caused by runon and runoff. Any surveyed benchmarks will also be protected and maintained.

I-2e Maintenance and Inspection Requirements [40 CFR 264.118(b)]

The OD facility will be inspected on a routine basis to determine any malfunctions and deteriorations, operator errors, and/or discharges that may cause or result in the release of hazardous waste or hazardous constituents to the environment or are otherwise a threat to human health. Specific items inspected during the post-closure care period are outlined in Table I-3. The inspections will be conducted on a schedule specified in Table I-3, and response will be implemented for problems that might occur. Since erosion damage can be significant, the final cover, if emplaced, will be inspected following any rainfall event equivalent to a 10-year, 24-hour intensity.

A written schedule will be used for inspecting monitoring equipment, safety and emergency equipment, security devices, and operating and structural equipment used to prevent, detect, or respond to hazards that may threaten human health and the environment. The schedule includes the types of problems that are most likely to be associated with the care and maintenance of the closed OD facility, such as a broken monitoring well or subsidence or erosion of the final cover. The schedule will be kept at the range operations control center at all times.

All inspections that are conducted will be recorded in an inspection log that is kept at the range control center. The inspection log will include the date and time of the inspection, the name of the inspector, a notation of observations made, and the date and nature of any repairs or remedial measures taken to correct the problem. An example of the post-closure inspection log is presented in Fig. I-1.

Table I-3. Inspection and maintenance plan for Melrose AFR OB/OD area

Area/Equipment	Specific Items	Types of Problems	Corrective Action	Frequency of Inspection
Security devices	Facility fence	Broken	Repair immediately if damaged	Quarterly
	Access gate	Locking mechanism jammed	Repair/replace	Quarterly
	Signs	Illegible	Replace	Quarterly
Final cover	Natural cover (may include vegetation)	Dead spots, weed growth	Remove any competitive species	Quarterly
	Cover Integrity	Cover subsistence; rills, areas of bare soil; rodent burrows	Restore site to grade; reseed	Quarterly (immediately following any 10 year, 24-hour intensity rainfall event)
Runon and runoff drainage control system	Drainage channels/pipes	Settlement, ponded water, blockage, erosion	Repair settlement and erosion, remove blockages	Quarterly
Detection/monitoring equipment	Monitoring wells	Unlocked well caps, damaged casings, protective posts or well pads	Secure well caps; if damage precludes the use of the well, seal damaged well and install a replacement well	Quarterly
Benchmarks	N/A	Damage	Replace if damaged	Quarterly

If an inspection reveals deterioration or malfunction of equipment and/or structures, remediation of the problem will be implemented to prevent or mitigate any harm to human health and the environment. When such a hazard is recognized as being an imminent threat, remedial action will be taken immediately.

I-2f Amendment of Post-Closure Plan [40 CFR 264.118(d)]

An amended post-closure plan will be submitted for review and approval if: (1) changes in the operating plans or facility design affect the approved post-closure plan or (2) events occur during the active life of the facility, including partial and final closure, that affect the approved post-closure plan.

The post-closure plan will be amended at least 60 days prior to a proposed change in facility design or operation or no later than 60 days after an unexpected event has occurred that affects the post-closure plan.

Date: _____

Time of Inspection: _____

Inspector: _____

OBSERVATION OF AREA/EQUIPMENT

Security Devices

1. General condition of facility fence and gate, locks, legibility of signs
2. Identify existing problems requiring repair or replacement, if any

Final Cover

1. Description of cover conditions/appearance
2. Identify areas >25 ft^2 requiring revegetation, resurfacing, and grading, if any

Drainage Control

1. Identify areas containing significant volumes of ponded water (i.e., >25 ft^2); identify areas of >25 ft^2 of eroded cover
2. Identify other areas indicative of degradation, blockage, settlement, etc.

Detection/Monitoring Equipment

1. Notation of any monitoring wells that are not locked
2. Notation of damaged casings, protective posts, eroded well pads

Benchmarks

1. Description of any damage to benchmarks

REPAIRS OR REMEDIAL MEASURES

A narrative of the date and nature of repairs or remedial actions taken since the previous inspection. Documentation may include photographs and/or sketches of the deteriorated conditions prior to corrective action.

Fig. I-1. Melrose AFR OD area post-closure inspection log.

I-2g Post-Closure Notices (40 CFR 264.116 and 264.119)

A record of the type, location, and quantity of hazardous wastes disposed of within the OD unit will be submitted to the local zoning authority or the authority with jurisdiction over local land use and to the NMED RCRA Program Manager and/or the EPA Regional Administrator no later than 60 days following closure of the OD unit.

Additionally, a notation on the deed to the facility property will be recorded within 60 days of final certification of closure of the first hazardous waste disposal unit and within 60 days of the last hazardous waste disposal unit. This information will include whether(1) the land has been used to manage hazardous wastes and (2) its use is restricted under 40 CFR Subpart G regulations.

A survey plat and record of the type, location, and quantity of hazardous wastes disposed of within each disposal unit at the EOD facility will be filed with the local zoning authority or the authority with jurisdiction over local land use and with the NMED RCRA Program Manager and/or the EPA Regional Administrator. The plot will state Cannon AFB's obligation to restrict disturbance of the hazardous waste disposal unit area in accordance with applicable Subpart G regulations.

A certification that has been signed by an authorized official of Cannon AFB and that signifies that the deed notation has been recorded, including a copy of the document in which the notation has been placed, will be submitted to the NMED RCRA Program Manager and/or the EPA Regional Administrator.

I-2h Certification of Completion of Post-Closure Care (40 CFR 264.120)

A certification that the post-closure care period for the EOD hazardous waste disposal unit was performed in accordance with the specifications in the approved post-closure plan will be submitted by registered mail to the NMED RCRA Program Manager and/or the EPA Regional Administrator no later than 60 days following completion of the established post-closure care period. The certification will be signed by an authorized official of Cannon AFB and an independent registered professional engineer. Documentation supporting the independent registered professional engineer's certification will be furnished to the NMED RCRA Program Manager and/or the EPA Regional Administrator upon request.

I-2i Financial Requirements for Post-Closure (40 CFR 264.144 and 264.145)

Cannon AFB and Melrose AFR facilities are owned and operated by the federal government and, as such, are exempt from the financial requirements for post-closure care. These include 40 CFR 264.144, "Cost Estimate for Post-Closure Care," and 264.145, "Financial Assurance for Post-Closure Care."

J. OTHER FEDERAL LAWS

It is believed that the Melrose AFR OD area is in compliance with the following federal laws:

- Wild and Scenic Rivers Act, 16, United States Code (USC) 1273 *et seq.*,
- Endangered Species Act, 16 USC 1531 *et seq.*, and
- Fish and Wildlife Coordination Act, 16, USC 661 *et seq.*

K. CERTIFICATION

I certify under penalty of law that this document and all attachments were prepared under my direction or supervision in accordance with a system designed to ensure that qualified personnel properly gather and evaluate the information submitted. Based on my inquiry of the person or persons who manage the system, or those persons directly responsible for gathering the information, the information submitted is, to the best of my knowledge and belief, true, accurate, and complete. I am aware that there are significant penalties for submitting false information, including the possibility of fine and imprisonment for knowing violations.

Signature: _____

Lance L. Smith, Colonel, USAF
Commanding

Date: _____

L. BIBLIOGRAPHY

Cronin, James G. 1967. *Ground Water in Ogallala Formation in the Southern High Plains of Texas and New Mexico*, U.S.Geological Survey, Department of the Interior, Washington, D.C.

Cruz, R. R. 1989. "Groundwater Levels Portales Area, New Mexico 1982-1987," Map No. GWL-PA-82/87, U.S. Geological Survey, New Mexico State Engineer Office, Albuquerque, N. M.

Department of the Army 1984. *Military Explosives*, Army Technical Manual TM 9-1300-214, Headquarters, Washington, D.C.

U.S. Environmental Protection Agency *Federal Register*, Vol. 55, No. 145, July 27, 1990. "Corrective Action for Solid Waste Management Units (SWMUs) at Hazardous Waste Management Facilities," (Proposed Rule).

Institute of Makers of Explosives 1989. *RCRA Guidance Manual for Permitting Commercial Explosives Industry Open Burning/Open Detonation Units*, Washington, D.C.

Lewis, Richard J. 1993. *Hawley's Condensed Chemical Dictionary*, 12th Ed., New York.

New Mexico Environmental Department 1992. *"Hazardous Waste Management Regulations,"* EIB/HWMR-7, Santa Fe, N.M.

Radian Corporation 1992. *Management Action Plan, Cannon Air Force Base, Clovis, New Mexico*, Oak Ridge, Tenn., September.

Radian Corporation 1993. *Remedial Investigation (RI) Cannon Air Force Base, Landfill No. 4 SWMU No. 104, IRP Site LF-4 Draft*, Oak Ridge, Tenn., January.

Soil Conservation Service 19__. *Soil Survey of Roosevelt County*, New Mexico.

Snedecor, G. W. and W. G. Cochran. *Statistical Methods*. 6th Ed., Section 4.14.

U.S. Army Materiel Command 1971. *Engineering Design Handbook: Explosive Series Properties of Explosives of Military Interest*, Headquarters, Washington, D.C., January.

Weast, Robert C. and Melvin J. Astle Editors 1982. *Handbook of Chemistry and Physics*, 63rd ed., CRC Press, Inc., Boca Raton, Fl.

L. BIBLIOGRAPHY

Cronin, James G. 1967. *Ground Water in Ogallala Formation in the Southern High Plains of Texas and New Mexico*, U.S.Geological Survey, Department of the Interior, Washington, D.C.

Cruz, R. R. 1989. "Groundwater Levels Portales Area, New Mexico 1982-1987," Map No. GWL-PA-82/87, U.S. Geological Survey, New Mexico State Engineer Office, Albuquerque, N. M.

Department of the Army 1984. *Military Explosives*, Army Technical Manual TM 9-1300-214, Headquarters, Washington, D.C.

Institute of Makers of Explosives 1989. *RCRA Guidance Manual for Permitting Commercial Explosives Industry Open Burning/Open Detonation Units*, Washington, D.C.

Lewis, Richard J. 1993. *Hawley's Condensed Chemical Dictionary*, 12th Ed., New York.

New Mexico Environmental Department 1992. *"Hazardous Waste Management Regulations,"* EIB/HWMR-7, Santa Fe, N.M.

Radian Corporation 1992. *Management Action Plan, Cannon Air Force Base, Clovis, New Mexico*, Oak Ridge, Tenn., September.

Radian Corporation 1993. *Remedial Investigation (RI) Cannon Air Force Base, Landfill No. 4 SWMU No. 104, IRP Site LF-4 Draft*, Oak Ridge, Tenn., January.

Soil Conservation Service 19__. *Soil Survey of Roosevelt County*, New Mexico.

Snedecor, G. W. and W. G. Cochran. *Statistical Methods*. 6th Ed., Section 4.14.

U.S. Army Materiel Command 1971. *Engineering Design Handbook: Explosive Series Properties of Explosives of Military Interest*, Headquarters, Washington, D.C., January.

Weast, Robert C. and Melvin J. Astle Editors 1982. *Handbook of Chemistry and Physics*, 63rd ed., CRC Press, Inc., Boca Raton, Fl.

LIBRARY COPY

27th FIGHTER WING

TEAM CANNON

RCRA PERMIT APPLICATION FOR OPEN DETONATION ACTIVITIES AT MELROSE AIR FORCE RANGE

Volume II -- Appendices

September 1993

CANNON AFB, NEW MEXICO

CANNON AIR FORCE BASE
RCRA PERMIT APPLICATION FOR
OPEN DETONATION ACTIVITIES
AT
MELROSE AIR FORCE RANGE

Volume II - Appendices

September 1993

Prepared for
27 CES/CEV
Cannon Air Force Base, New Mexico 88103-5136

Prepared by
Radian Corporation
120 S. Jefferson Circle
Oak Ridge, Tennessee 37830

CANNON AIR FORCE BASE
RCRA PERMIT APPLICATION FOR
OPEN DETONATION ACTIVITIES
AT
MELROSE AIR FORCE RANGE

Volume II - Appendices

September 1993

Prepared for
27 CES/CEV
Cannon Air Force Base, New Mexico 88103-5136

Prepared by
Radian Corporation
120 S. Jefferson Circle
Oak Ridge, Tennessee 37830
Doc. #F930618.1JY51

APPENDIX A
RCRA PART A APPLICATION

Please print or type with ELITE type (12 characters per inch) in the unshaded areas only

Form Approved. OMB No. [illegible]
GSA No. [illegible]

For EPA Regional Use Only

Date Received
Month Day Year

EPA
United States Environmental Protection Agency
Washington, DC 20460

Hazardous Waste Permit Application Part A

(Read the Instructions before starting)

For State Use Only

I. ID Number(s)

A. EPA ID Number: N M 5 5 7 2 1 2 4 4 5 6

B. Secondary ID Number *(if applicable)*:

II. Name of Facility

M E L R O S E A I R F O R C E R A N G E

III. Facility Location *(Physical address not P.O. Box or Route Number)*

A. Street: 6 mi West 5 mi South

Street *(continued)*:

City or Town: Melrose

State: N M

ZIP Code: 8 8 1 2 4 -

County Code *(if known)*:

County Name: Curry/Roosevelt

B. Land Type *(enter code)*: F

C. Geographic Location

LATITUDE *(degrees, minutes, & seconds)*: 3 4 1 6 0 4 3

LONGITUDE *(degrees, minutes, & seconds)*: 1 0 3 4 7 0 2 3

D. Facility Existence Date

Month Day Year: 0 1 0 1 1 9 7

IV. Facility Mailing Address

Street or P.O. Box: 2 7 FW/CC 100 DL Ingram Blvd

City or Town: Cannon AFB

State: N M

ZIP Code: 8 8 1 0 3 - 5 0 0 0

V. Facility Contact *(Person to be contacted regarding waste activities at facility)*

Name *(last)*: O S H I T A

(first): B R U C E

Job Title: C H I E F C E V

Phone Number *(area code and number)*: 5 0 5 - 7 8 4 - 4 3 4 8

VI. Facility Contact Address *(See instructions)*

Contact Address: Location [ ] Mailing [X]

B. Street or P.O. Box: 2 7 CES 1 1 1 ENGINEERS WAY

City or Town: CANNON AFB

State: N M

ZIP Code: 8 8 1 0 3 - 5 1 3 6

Please print or type with ELITE type (12 characters per inch) in the unshaded areas only

EPA I.D. Number (enter from page 1)	Secondary ID Number (enter from page 1)
NM5572124456	

VII. Operator Information (see instructions)

Name of Operator				
27 CIVIL ENGINEERING SQUADRON				
Street or P.O. Box				
111 ENGINEERS WAY				
City or Town	State	ZIP Code		
CANNON AFB	NM	88103-5136		
Phone Number (area code and number)	B. Operator Type	C. Change of Operator Indicator	Date Changed (Month Day Year)	
505-784-4348	F	Yes [ ] No [X]		

VIII. Facility Owner (see instructions)

A. Name of Facility's Legal Owner				
27 FIGHTER WING US AIR FORCE				
Street or P.O. Box				
100 DLINGRAM BLVD SULTE 100				
City or Town	State	ZIP Code		
CANNON AFB	NM	88103-5214		
Phone Number (area code and number)	B. Owner Type	C. Change of Owner Indicator	Date Changed (Month Day Year)	
505-784-4348	F	Yes [ ] No [ ]		

IX. SIC Codes (4-digit, in order of significance)

Primary		Secondary	
9711	(description) National Defense	4532	(description) Air Transportation Facility
Secondary		Secondary	
	(description)		(description)

X. Other Environmental Permits (see instructions)

A. Permit Type (enter code)	B. Permit Number	C. Description

Please print or type with ELITE type (12 characters per inch) in the unshaded areas only

EPA I.D. Number (enter from page 1)												Secondary ID Number (enter from page
N	M	5	5	7	2	1	2	4	4	5	6	

XI. Nature of Business (provide a brief description)

This facility will be utilized for Open Detonation for the demilitarization munitions, munition related item, and similiar reactive items. Items are transported from Cannon AFB to Melrose Range on military vehicles. The operation is conducted as described in the Sep 93 Part B Permit Application Section D.

XII. Process - Codes and Design Capacities

A. PROCESS CODE – *Enter the code from the list of process codes below that best describes each process to be used at the facility. Twelve lines are provided for entering codes. If more lines are needed, attach a separate sheet of paper with the additional information. If a process will be used that is not included in the list of codes below, then describe the process (including its design capacity) in the space provided in Item XIII.*

B. PROCESS DESIGN CAPACITY – *For each code entered in column A, enter the capacity of the process.*

1. **AMOUNT** – *Enter the amount. In a case where design capacity is not applicable (such as in a closure/post-closure or enforcement action) enter the total amount of waste for that process unit.*
2. **UNIT OF MEASURE** – *For each amount entered in column B(1), enter the code from the list of unit measure codes below that describes the unit of measure used. Only the units of measure that are listed below should be used.*

C. PROCESS TOTAL NUMBER OF UNITS – *Enter the total number of units used with the corresponding process code.*

PROCESS CODE	PROCESS	APPROPRIATE UNITS OF MEASURE FOR PROCESS DESIGN CAPACITY
	DISPOSAL:	
D79	INJECTION WELL	GALLONS; LITERS; GALLONS PER DAY; OR LITERS PER DAY
D80	LANDFILL	ACRE-FEET OR HECTARE-METER
D81	LAND APPLICATION	ACRES OR HECTARES
D82	OCEAN DISPOSAL	GALLONS PER DAY OR LITERS PER DAY
D83	SURFACE IMPOUNDMENT	GALLONS OR LITERS
	STORAGE:	
S01	CONTAINER (barrel, drum, etc.)	GALLONS OR LITERS
S02	TANK	GALLONS OR LITERS
S03	WASTE PILE	CUBIC YARDS OR CUBIC METERS
S04	SURFACE IMPOUNDMENT	GALLONS OR LITERS
	TREATMENT:	
T01	TANK	GALLONS PER DAY OR LITERS PER DAY
T02	SURFACE IMPOUNDMENT	GALLONS PER DAY OR LITERS PER DAY
T03	INCINERATOR	SHORT TONS PER HOUR; METRIC TONS PER HOUR; GALLONS PER HOUR; LITERS PER HOUR; OR BTU'S PER HOUR
T04	OTHER TREATMENT (Use for physical, chemical, thermal or biolgical treatment processes not occurring in tanks, surface impoundment or incinerators. Describe the processes in the space provided in Item XIII.)	GALLONS PER DAY; LITERS PER DAY; POUNDS PER HOUR; SHORT TONS PER HOUR; KILOGRAMS PER HOUR; METRIC TONS PER DAY; METRIC TONS PER HOUR; OR SHORT TONS PER DAY

UNIT OF MEASURE	UNIT OF MEASURE CODE
GALLONS	G
GALLONS PER HOUR	E
GALLONS PER DAY	U
LITERS	L
LITERS PER HOUR	H
LITERS PER DAY	V
SHORT TONS PER HOUR	D
METRIC TONS PER HOUR	W
SHORT TONS PER DAY	N
METRIC TONS PER DAY	S
POUNDS PER HOUR	J
KILOGRAMS PER HOUR	R
CUBIC YARDS	Y
CUBIC METERS	C
ACRES	B
ACRE-FEET	A
HECTARES	Q
HECTARE-METER	F
BTU's PER HOUR	K

Please print or type with ELITE type (12 characters per inch) in the unshaded areas only

Form Approved. OMB No. 2050-0034 Expires 12-31-
GSA No. 0246-EPA-OT

EPA I.D. Number (enter from page 1)												Secondary ID Number (enter from page 1)
N	M	5	5	7	2	1	2	4	4	5	6	

Process - Codes and Design Capacities (continued)

EXAMPLE FOR COMPLETING ITEM XII (shown in line numbers X-1 and X-2 below): A facility has two storage tanks, one tank can hold 200 gallons and the other can hold 400 gallons. The facility also has an incinerator that can burn up to 20 gallons per hour.

Line Number		A. PROCESS CODE (from list above)			B. PROCESS DESIGN CAPACITY 1. AMOUNT (specify)	B. 2. UNIT OF MEASURE (enter code)	C. PROCESS TOTAL NUMBER OF UNITS			FOR OFFICIAL USE ONLY
X	1	S	0	2	600	G	0	0	2	
X	2	T	0	3	20	E	0	0	1	
	1	T	0	4	1000*	J	0	0	1	
	2									
	3									
	4									
	5									
	6									
	7									
	8									
	9									
1	0									
1	1									
1	2				* See Comments					

NOTE: If you need to list more than 12 process codes, attach an additional sheet(s) with the information in the same format as above. Number the lines sequentially, taking into account any lines that will be used for additional treatment processes in Item XIII.

XIII. Additional Treatment Processes (follow instructions from Item XII)

Line Number (enter numbers in sequence with Item XII)	A. PROCESS CODE	B. TREATMENT PROCESS DESIGN CAPACITY 1. AMOUNT (specify)	B. 2. UNIT OF MEASURE (enter code)	C. PROCESS TOTAL NUMBER OF UNITS	D. DESCRIPTION OF PROCESS
	T 0 4	1000	J	0 0 1	Munition items (wastes) are detonated in a bermed area utilizing plastic explosive as an initiator (See Section D in the Sep 93 Part B Permit Application for more detail)
	T 0 4				* See comments
	T 0 4				
	T 0 4				

Please print or type with ELITE type (12 characters per inch) in the unshaded areas only

EPA I.D. Number (enter from page 1)												Secondary ID Number (enter from page 1)
N	M	5	5	7	2	1	2	4	4	5	6	

XIV. Description of Hazardous Wastes

A. EPA HAZARDOUS WASTE NUMBER – *Enter the four-digit number from 40 CFR, Part 261 Subpart D of each listed hazardous waste you will handle. For hazardous wastes which are not listed in 40 CFR, Part 261 Subpart D, enter the four-digit number(s) from 40 CFR, Part 261 Subpart C that describes the characteristics and/or the toxic contaminants of those hazardous wastes.*

B. ESTIMATED ANNUAL QUANTITY – *For each listed waste entered in column A estimate the quantity of that waste that will be handled on an annual basis. For each characteristic or toxic contaminant entered in column A estimate the total annual quantity of all the non-listed waste(s) that will be handled which possess that characteristic or contaminant.*

C. UNIT OF MEASURE – *For each quantity entered in column B enter the unit of measure code. Units of measure which must be used and the appropriate codes are:*

ENGLISH UNIT OF MEASURE	CODE	METRIC UNIT OF MEASURE	CODE
POUNDS	P	KILOGRAMS	K
TONS	T	METRIC TONS	M

If facility records use any other unit of measure for quantity, the units of measure must be converted into one of the required units of measure taking into account the appropriate density or specific gravity of the waste.

D. PROCESSES

1. PROCESS CODES:

For listed hazardous waste: For each listed hazardous waste entered in column A select the code(s) from the list of process codes contained in Item XII A. on page 3 to indicate how the waste will be stored, treated, and/or disposed of at the facility.

For non-listed hazardous waste: For each characteristic or toxic contaminant entered in column A, select the code(s) from the list of process codes contained in Item XII A. on page 3 to indicate all the processes that will be used to store, treat, and/or dispose of all the non-listed hazardous wastes that possess that characteristic or toxic contaminant.

NOTE: THREE SPACES ARE PROVIDED FOR ENTERING PROCESS CODES. IF MORE ARE NEEDED:

1. *Enter the first two as described above.*
2. *Enter "000" in the extreme right box of Item XIV-D(1).*
3. *Enter in the space provided on page 7, Item XIV-E, the line number and the additional code(s).*

2. PROCESS DESCRIPTION: *If a code is not listed for a process that will be used, describe the process in the space provided on the form (D.(2)).*

NOTE: HAZARDOUS WASTES DESCRIBED BY MORE THAN ONE EPA HAZARDOUS WASTE NUMBER – Hazardous wastes that can be described by more than one EPA Hazardous Waste Number shall be described on the form as follows:

1. *Select one of the EPA Hazardous Waste Numbers and enter it in column A. On the same line complete columns B, C, and D by estimating the total annual quantity of the waste and describing all the processes to be used to treat, store, and/or dispose of the waste.*
2. *In column A of the next line enter the other EPA Hazardous Waste Number that can be used to describe the waste. In column D(2) on that line enter "included with above" and make no other entries on that line.*
3. *Repeat step 2 for each EPA Hazardous Waste Number that can be used to describe the hazardous waste.*

EXAMPLE FOR COMPLETING ITEM XIV (shown in line numbers X-1, X-2, X-3, and X-4 below) – A facility will treat and dispose of an estimated 500 pounds per year of chromic acid wastes from leather tanning and finishing operation. In addition, the facility will treat and dispose of the spent sulfuric acid waste (D002 corrosive) only and there will be an estimated 200 pounds per year of each waste. The other waste, [illegible] there will be an estimated 100 pounds per year of that waste. Treatment will be in an incinerator and [illegible]

Line Number	A. EPA HAZARDOUS WASTE NO. (enter code)					B. ESTIMATED ANNUAL QUANTITY OF WASTE	C. UNIT OF MEASURE (enter code)	D. PROCESS (1) PROCESS CODES (enter)								D. PROCESS (2) PROCESS DESCRIPTION (If a code is not entered in D(1))
X	1	K	0	5	4	500	P	T	0	3	D	8	0			
X	2	D	0	0	2	200	T	T	0	3	D	8	0			
X	3	D	0	0	1	100	T	T	0	3	D	8	0			
X	4	D	0	0	2											Included With Above

Please print or type with ELITE type (12 characters per inch) in the unshaded areas only

Form Approved. OMB No. 2050-0034 Expires 1.
GSA No. 0246-EPA-OT

EPA I.D. Number (enter from page 1): N M 5 5 7 2 1 2 4 4 5 6

Secondary ID Number (enter from page 1):

Description of Hazardous Wastes (continued)

Line Number	A. EPA HAZARDOUS WASTE NO. (enter code)	B. ESTIMATED ANNUAL QUANTITY OF WASTE	C. UNIT OF MEASURE (enter code)	D. PROCESSES (1) PROCESS CODES (enter)	D. PROCESSES (2) PROCESS DESCRIPTION (If a code is not entered in D(1))
1	D 0 0 3	8000	P	T 0 4	See Atch listing and in
2					Section C in the Sep 93
3					Part B Permit Application
4					
5					
6					
7					
8					
9					
10					
11					
12					
13					
14					
15					
16					
17					
18					
19					
20					
21					
22					
23					
24					
25					
26					
27					
28					
29					
30					
31					
32					
33					

Please print or type with ELITE type (12 characters per inch) in the unshaded areas only

Form Approved. OMB No. 2050-0034 Expires 12-31-91
GSA No. 0246-EPA-OT

EPA I.D. Number *(enter from page 1)*: N M 5 5 7 2 1 2 4 4 5 6

Secondary ID Number *(enter from page 1)*:

XIV. Description of Hazardous Waste *(continued)*

E. USE THIS SPACE TO LIST ADDITIONAL PROCESS CODES FROM ITEM D(1) ON PAGE 6.

Line Number	Additional Process Codes (enter)

XV. Map

Attach to this application a topographic map of the area extending to at least one mile beyond property boundaries. The map must show the outline of the facility, the location of each of its existing and proposed intake and discharge structures, each of its hazardous waste treatment, storage, or disposal facilities, and each well where it injects fluids underground. Include all springs, rivers and other surface water bodies in this map area. See instructions for precise requirements.

XVI. Facility Drawing

All existing facilities must include a scale drawing of the facility (see instructions for more detail).

XVII. Photographs

All existing facilities must include photographs (aerial or ground-level) that clearly delineate all existing structures; existing storage, treatment and disposal areas; and sites of future storage, treatment or disposal areas (see instructions for more detail).

XVIII. Certification(s)

I certify under penalty of law that this document and all attachments were prepared under my direction or supervision in accordance with a system designed to assure that qualified personnel properly gather and evaluate the information submitted. Based on my inquiry of the person or persons who manage the system, or those persons directly responsible for gathering the information, the information submitted is, to be the best of my knowledge and belief, true, accurate, and complete. I am aware that there are significant penalties for submitting false information, including the possibility of fine and imprisonment for knowing violations.

Owner Signature: William M Guth — Date Signed: 24 Feb 94

Name and Official Title *(type or print)*
WILLIAM M. GUTH, Brigadier General, USAF Commander, 27th Fighter Wing

Operator Signature: [signature] — Date Signed: 24 Feb 94

Name and Official Title *(type or print)*
JAMES E. STRASLER, Major, USAF Commander, 27th Civil Engineer Squadron

XIX. Comments

* Munitions items are handled in pounds Net Explosive Weight (NEW)

Design Capacity: 8 ea 1000 lb (NEW) detonations in an 8 hour day

8 X 1000 lb (NEW)/8 hr = 1000 lb/hr *This is a maximum design capacity.

Note: Mail completed form to the appropriate EPA Regional or State Office. (refer to instructions for more information)

Please print or type with ELITE type (12 characters per inch) in the unshaded areas only

Form Approved. OMB No. 2050-0034 Expires 12-31-91
GSA No. 0246-EPA-OT

EPA I.D. Number (enter from page 1)												Secondary ID Number (enter from page 1)											
N	M	5	5	7	2	1	2	4	4	5	6												

XIV. Description of Hazardous Waste (continued)

E. USE THIS SPACE TO LIST ADDITIONAL PROCESS CODES FROM ITEM D(1) ON PAGE 6.

Line Number	Additional Process Codes (enter)

XV. Map

Attach to this application a topographic map of the area extending to at least one mile beyond property boundaries. The map must show the outline of the facility, the location of each of its existing and proposed intake and discharge structures, each of its hazardous waste treatment, storage, or disposal facilities, and each well where it injects fluids underground. Include all springs, rivers and other surface water bodies in this map area. See instructions for precise requirements.

XVI. Facility Drawing

All existing facilities must include a scale drawing of the facility (see instructions for more detail).

XVII. Photographs

All existing facilities must include photographs (aerial or ground-level) that clearly delineate all existing structures; existing storage, treatment and disposal areas; and sites of future storage, treatment or disposal areas (see instructions for more detail).

XVIII. Certification(s)

I certify under penalty of law that this document and all attachments were prepared under my direction or supervision in accordance with a system designed to assure that qualified personnel properly gather and evaluate the information submitted. Based on my inquiry of the person or persons who manage the system, or those persons directly responsible for gathering the information, the information submitted is, to be the best of my knowledge and belief, true, accurate, and complete. I am aware that there are significant penalties for submitting false information, including the possibility of fine and imprisonment for knowing violations.

Owner Signature: William M. Guth — Date Signed: 15 Sep 93

Name and Official Title (type or print)
WILLIAM M. GUTH, Colonel, USAF Commander, 27th Fighter Wing

Operator Signature: [illegible] — Date Signed: 9.14.93

Name and Official Title (type or print)
TIMOTHY G. WISE, Lt Colonel, USAF Commander, 27th Civil Engineering Squadron

XIX. Comments

Munitions items are handled in pounds. Nex Explosive Weight (NEW)

Design Capacity: 8 ea 1000 lb (NEW) detonations in an 8 hour day

8 X 1000 lb (NEW)/8 hr = 1000 lb/hr

This is a maximum design capacity. The operational average is expected to be 125 lb/hr.

Note: Mail completed form to the appropriate EPA Regional or State Office. (refer to instructions for more information)

Waste Munitions
Cartridge Components and Combustion Products

WASTE MUNITION	COMPONENTS				PROPELLENT COMBUSTION PRODUCTS		PRIMER COMBUSTION PRODUCTS (all cartridges)	
	Propellants	Percent Composition	Primers/Igniters	Percent Composition	Ingredient	Mol/Kg	Ingredient	Mol/Kg
.38 Cal. M41 Special Ball	*Double-based, flake* -N in Nitrocellulose -Nitroglycerin -Ethyl centralite -Graphite -Nitrocellulose	 12.6% to 13.3% 36% to 42% 1.5% 0.75% Remainder	*Percussion* -Lead styphnate -Tetracene -Barium nitrate -Antimony sulfide -Aluminum powder	 38% 2% 44% 12% 4%	-Carbon monoxide -Carbon dioxide -Hydrogen -Nitrogen -Potassium hydroxide -Water	10.17 4.74 2.07 5.05 0.07 16.03	-Antimony sulfide -Barium hydroxide -Barium peroxide -Carbon monoxide -Carbon dioxide -Lead -Lead monoxide -Nitrogen -Sulfur dioxide -Water	0.23 0.06 0.39 2.44 5.77 0.05 0.25 8.81 1.37 6.08
.38 Cal. Wadcutter	*Double-based, flake* -Nitroglycerin -Potassium sulfate -Ethyl centralite -Nitrocellulose	 38% to 42% 1% 1% 56% to 60%	*Percussion* -Lead styphnate -Tetracene -Barium Nitrate -Antimony sulfide -Aluminum powder	 38% 2% 44% 12% 4%	-Carbon monoxide -Carbon dioxide -Hydrogen -Nitrogen -Potassium hydroxide -Water	1.49 6.11 3.91 5.77 0.05 18.53		
ARD 446-1/863-1 Impulse Cartridge	*Double-based, smokeless* -Nitrocellulose -Nitroglycerin -Ethyl centralite -Barium nitrate -Potassium nitrate -Graphite -Ash -Water	 71.3% 20% 6.5% 1% 0.7% 0.1% 0.1% to 0.2% 0.25%	*Percussion* -Nitrocellulose -Nitroglycerin -Dinitrotoluene -Graphite -Diphenylamine -Sodium sulfate -Dibutylphthalate -Ash -Ammonium carbonate -Residual solubles -Water	 56% 39.5% 0.35% 1% 1% 0.1% 0.4% 0.25-0.5% 0.3-0.4% 0.3% 0.5%	*Solid Products of Combustion:* -Lead oxide -Barium oxide -Antimony oxide -Aluminum oxide -Potassium oxide -Sulfur oxide			

WASTE MUNITION	COMPONENTS				PROPELLENT COMBUSTION PRODUCTS		PRIMER COMBUSTION PRODUCTS (all cartridges)	
	Propellants	Percent Composition	Primers/Igniters	Percent Composition	Ingredient	Mol/Kg	Ingredient	Mol/Kg
40 mm Cartridge	-Nitrocellulose -Nitroglycerin -Nitroguanidine -Ethyl centralite -Potassium nitrate -Potassium sulfate -Diphenylamine -Dinitrotoluene -Dibutylphthalate -Cryolite -Total volatiles -Graphite	22% to 90% 19% to 40% 54.7% 0.75% to 6% 1.5% 1% 1% 8% 2% 0.3% 0.3% to 3.2% 0.15% to 0.4%	NA		NA		NA	

NA - Information not available

Chemical components and combustion products of smoke and illumination signals

COMPONENTS					
First Fire Composition	Scratch Mixture	Prime Mixture	Smoke Igniter	Flare Composition	Smoke Composition
-Potassium nitrate, 49% -Antimony sulfide, 20% -Sulfur, 12% -Black powder, 16% -Dextrin, 3%	-Red phosphorus, 54% -Varnish, 38% -Petroleum Spirits, 8%	-Black powder, 98.5% -Binder, cellulose nitrate-camphor, 0.06% -Amyl acetate, 1.44%	-Cupric oxide, 20.8% -Silicon, 20.8% -Lead dioxide, 20.9% -Binder, cellulose nitrate-camphor, 1.5% -Amyl acetate, 36%	-Potassium perchlorate, 15% -Strontium nitrate, 45% -Magnesium, 20.4% -Hexachlorobenzene, 12% -Asphaltum, 7% -Castor oil, 0.3% -Linseed oil, 0.3%	-Dye mixture (solvent orange, disperse red), 60.19% -Sugar, 14.56% -Potassium chlorate, 18.93% -Graphite, 1,46% -Diatomateous Earth, 4.86%
PROBABLE COMBUSTION PRODUCTS OR RESIDUES					
-Carbon monoxide -Carbon dioxide -Carbonyl sulfide -Hydrogen -Water -Hydrogen sulfide -Potassium sulfide -Potassium sulfate -Potassium hydroxide -Nitrogen -Nitric oxide -Sulfur dimer -Disulfur monoxide -Antimony trioxide -Antimony pentoxide -Sulfur monohydride -Sulfur monoxide -Sulfur dioxide -Sulfur trioxide	-Carbon -Carbon dioxide -Carbon monoxide -Methane -Hydrogen -Phosphorus Nitride -Phosphorus trioxide	-Carbon -Carbon dioxide -Carbon monoxide -Carbon disulfide -Water -Hydrogen sulfide -Potassium carbonate -Potassium sulfate -Nitrogen -Sulfur	-Copper -Hydrogen -Lead -Silicon -Silicon nitride -Silicon carbide -Silicon dioxide	-Carbon -Methane -Carbon monoxide -Carbon dioxide -Hydrogen -Water -Hydrogen chloride -Hydrogen cyanide -Potassium -Potassium chloride -Magnesium oxide -Nitrogen -Ammonia -Nitric oxide -Strontium chloride -Strontium oxide	-1,1-Biphenyl -1,2-Propadienylbenzene -1,3-Dimethylbenzene -1-(1,1-Dimethylethyl)- naphthalene -1-Aminoanthraquinone -1-Aminonaphthalene -1-Cyanonaphthalene -1-Hexynylbenzene -1-Isocyanonaphthalene -1-Methylaminoanthraquinone -1-Methylaminobiphenylene -1-Methylnaphthalene -1-phenyl-1-butyne -1-Phenylnaphthalene -1H-indene -1H-indene, 1-methylene -2-Amino-9H-fluorene -2-Aminoanthraquinone -2-Methylisocyanobenzene -2-Methylnaphthalene -2-Phenyloxazole -3-Phenyl-2-propenal -4-Hydroxybenzonitrile -4-Methyl-1,1-biphenyl

PROBABLE COMBUSTION PRODUCTS OR RESIDUES					
First Fire Composition	Scratch Mixture	Prime Mixture	Smoke Igniter	Flare Composition	Smoke Composition
					-9H-Fluorene -Acetophenone -Alpha-phenylaminobenzeneacetonitrile -Amino-1,1-biphenyls -Amino-beta-naphthol -Anisole -Anthracene -Anthraquinone -Benzaldehyde -Benzofuran -Benzonitrile, N-oxide -Biphenylene -C10-alkene -C13-alkanes -Carbon dioxide -Carbon monoxide -Cyanobenzene -Dibenzofuran -Diethylphthalate -Hydrogen chloride -Hydrogen cyanide -Isoquinone -Methylphenyldiazene-1-oxide -N,N-diethylbenzeneamine -Naphthol (2,1-b) furan -Nitrogen oxides -Phenol -Phenylacetylene -Phenylhydrazine -Styrene -Toluene -Xylene-azo-beta-naphthol

APPENDIX B
FACILITY DESCRIPTION

APPENDIX B1-1
100-YEAR FLOODPLAIN STUDY, OD UNIT, MELROSE AFR

JR

United States Air Force

RCRA Subpart X Part B Application

100-Year Flood Plain Study

Open Burn/Open Detonation Thermal Treatment Facility

Melrose Air Force Range
New Mexico

February 1993

UNNAMED ARROYO NEAR FLOYD, NM

RIO GRANDE BASIN

Part 8 UNGAGED SITE

100-YEAR FLOOD PLAIN STUDY

TYPE OF MEASUREMENT. --Flood hydrograph and water surface profile determination for a ungaged site. The techniques for this flood plain analysis are accomplished using the SCS unit hydrograph approach in computer program package of HEC-1. Water surface profile computations are accomplished using computer program WSPRO.

LOCATION. --Lat. 34 16 43, long. 103 47 23, in SE NW SW, sec. 27, T.1 N., R. 30 E., 14.5 miles southwest of Melrose and 13 miles west-northwest of Floyd, in Roosevelt county. Study reach starts about 300 feet above Open burn/Open Detonation unit situated on the Melrose Bombing Range and ends about 350 feet below the unit. Site altitude is 4,380 feet from topographic map.

SURVEY OF SITE. --The drainage basin was determined for the unit location and a corresponding stream reach traversing the unit, for the 100 year flood boundary determination. The channel geometry was surveyed on January 25-26, 1993 by Ben Phillips and Scott Waltemeyer. Instrument W453551 was found correct by double rodding between two hubs and closed on the RP 1 at -0.05 ft. closure. The instrument for the surveying is a Total Station and the radial traversing function is used for the cross-section stationing.

DRAINAGE AREA. --7.3 square miles. U.S. Geological Survey 7.5 minute quadrangle maps: Tolar, SE and Gammil Well, NE was used for the drainage basin delineation. The basin was divided into a overland flow subbasin on top of the mesa and gullied subbasin below the escarpment. The following basin measurements are:

Subbasin	Drainage area (square miles)	Flow length (feet)	Altitude-high (feet)	Altitude-low (feet)	H
Overland	3.71	7,550	4,690	4,640	50
Gullied	3.57	19,960	4,600	4,400	200

FIELD CONDITIONS. --A reach was surveyed for 5,430 ft. The reach is straight with some contraction on the most downstream section. The channel is defined in the vicinity of the OB/OD unit, but the topography is disturbed below. Roads and a motor pool parking area exist below. Cross sections 5, 6, 7, and 8 are not used for the analysis because a flow channel is not defined. Channel material consists of grass, firm earth and some sand in the channel bottom. Roughness coefficients using Mannings n values:

Section	n value Sub area 1 and 2
1	0.022 0.024
2	0.022 0.024
3	0.022 0.024
4	0.022 0.024
5	propagated from section 4
6	"
7	"
8	"

Two photographs were made from 35mm color slides.

HYDROLOGY. –The 100 year peak discharge is determined from unit hydrograph method of the U.S. Soil Conservation Service, known as SCS TR-20 computer program. The U.S. Army Corps of Engineers computer package known as Hydrologic Engineering Center HEC-1 also includes the SCS TR-20 method. The HEC-1 Flood Hydrograph Package is used for this analysis beginning on page 4.

Precipitation Component: A synthetic storm from depth-duration data is used for the hypothetical 100 year 24 hour storm. NOAA precipitation station CN 1838 Clovis-North. The 24 hour precipitation for the basin is 5.40 inches and a NOAA Atlas II rainfall distribution is used for the analysis. The NOAA Atlas II for New Mexico was used for the 5-minute, 15-minute, 60-minute, 2-hour, 3-hour, 6-hour, 12-hour, and 24-hour rainfall distribution. The precipitation depth values are listed on the HEC-1 computer input and output. The following model parameters determined are as follows:

Subbasin	SCS lag hours	hours	Subbasin slope percent	v fps	CN	Impervious area percent
Overland	1.57	2.62	0.7	0.8	74	10.4
Gullied	0.90	1.50	1.0	–	74	4.5

The overland flow Tc is computed with the following equation:

$$Tc = L/3600 * V$$

where L is flow length in feet;
V is velocity in feet per second, from figure 2.3 of SCS chapter 2 manual for New Mexico. The overland flow hydrograph is shown on page 11.

$$\text{SCS lag} = Tc * 0.6$$

The gullied flow Tc is computed from figure 2.2 using Kirpicks relation with flow length and altitude fall. SCS lag as above. A hydrograph of the gullied or channel flow is shown on page 16. A 100-year peak discharge of 5,550 cubic feet per second is determined for this site from the above method. A hydrograph of the combined overland and gullied flow is shown on page 17.

HYDRAULICS. –Water surface profiles are obtained by computer program WSPRO developed by the Federal Highway Administration/ U.S. Geological Survey beginning on page 19. The method referred to as the standard step method for balancing the Energy Equation also known as step-backwater analysis is common to this computer package and the Hydrologic Engineering Center HEC-2 Water Surface Profiles package. Both computer packages produce the same calculations for open channel flow. The WSPRO package provides for improved hydraulic equations for flow through contractions or bridges, which does not apply to this study. The discharge of 5,550 cubic feet second is used for these water surface profile calculations. The flow regime was super critical and very uniform with a slight expansion indicated by the conveyance and Froude numbers. Cross sections 1, 2, 3, and 4 and propagated sections 5, 6, 7, and 8 are used for the water surface profile determinations. The propagated sections are based on section 4 and the valley slope between section 3 and 4. The propagated sections are used to obtain convergence of the computed profiles.

EVALUATION OF RESULTS. –Theoretical step-backwater analysis is rated good based upon comparison with the two slope areas. Fall, reach length, fall versus velocity head and conveyance ratios all are within acceptable limits. A U.S. Geological Survey streamflow gaging station (crest-stage gage) is about 3 miles

east of this Unnamed Arroyo. The station number is 08079300 Blackwater Draw near Floyd, NM. The predicted 100 year peak discharge for this basin is 8,710 cubic feet per second and has a drainage area of about 10 square miles. The maximum discharge for the period of record which began in 1963 is 3,400 cubic feet per second occurring September 1, 1969. Regional regression techniques are also applied to this site as presented by Waltemeyer, 1986. A 100-year peak discharge is determined at 3,280 cubic feet per second. Based upon the nearby gaging station record and the regional regression approach, the 100-year peak discharge of 5,550 cubic feet per second from the SCS method is very reasonable.

The plan view (page 45) shows the encroachment of the flood boundary on the open burn and open detonation pit. The northwest ground elevation from this survey showed a assumed elevation of 103.8 feet and the flood elevation is 102.98 feet. The south west corner ground elevation is 104.9 feet and the flood elevation is 105.25 feet at the right edge of water of section 1. Section 1 is located about mid distance between the north west and south west corner of the fence. The existing berm would need to be raised about 1 foot to contain this design 100 year flood discharge.

REFERENCES. --Miller, J.R., Frederick, R.H., and Tracy, R.J., 1973, Precipitation-frequency atlas of the western United States, volume Iv--New Mexico: National Oceanic and Atmospheric Administration NOAA Atlas 2, 43 p.

U.S. Army Corps of Engineers, 1990, HEC-1 Flood hydrograph package user's manual: Hydrologic Engineering Center, Davis, California, CPD-la, 283 p.

U.S. Soil Conservation Service, 1985, Peak rates of discharge for small watersheds: U.S. Department of Agriculture, Albuquerque, New Mexico, Engineering Field manual for Conservation Practices, 33p.

Waltemeyer, S.D., 1986, Techniques for estimating flood-flow frequency for unregulated streams in New Mexico: U.S. Geological Survey Water-Resources Investigations 86-4104, 56 p.

HYDROLOGIST. --Scott D. Waltemeyer composed this analysis. 1-30-1993.

```
ID      MELROSE SUBBASIN:OVERLAND AND GULLIED
ID      CN 1838   NM209, CLOVIS-NORTH
ID      100 YEAR - 24 HOUR, RAINFALL EVENT
ID
I       RAINFALL DISTRIBUTION: BALANCED STORM
ID      RAINFALL DATA: NOAA ATLAS NO. 2, VOLUME IV-NEW MEXICO
ID      COMPUTATION INTERVAL: 5 MINUTE
IT     5       0       0     288
IO     0       2       0
KK    O1  OVERLAND BASIN
KO     0       0       0
BA   3.7
KM        100 YR. - 24 HR. EVENT
PH                  0.91    1.79    3.15    3.68    4.07    4.70    5.40    6.10
KM  SCS RUNOFF
LS            74    10.4
UD   1.57
KK    G1  GULLEY BASIN
BA   3.6
KM        100 YR. - 24 HR. EVENT
PH                  0.91    1.79    3.15    3.68    4.07    4.70    5.40    6.10
LS            74     4.5
UD   0.90
KK    G2  BASIN OUTLET
KO     4
KM      COMBINE HYDROGRAPHS OF SUBBAINS
HC     2
ZZ
```

```
*****************************************
*                                       *
*  FLOOD HYDROGRAPH PACKAGE  (HEC-1)    *
*            SEPTEMBER 1990             *
*             VERSION 4.0               *
*                                       *
*  RUN DATE  01/21/1993  TIME  17:45:23 *
*                                       *
*****************************************
```

```
*****************************************
*                                       *
*    U.S. ARMY CORPS OF ENGINEERS       *
*    HYDROLOGIC ENGINEERING CENTER      *
*          609 SECOND STREET            *
*       DAVIS, CALIFORNIA 95616         *
*           (916) 756-1104              *
*                                       *
*****************************************
```

```
X     X  XXXXXXX   XXXXX          X
X     X  X        X     X        XX
X     X  X        X              X
XXXXXXX  XXXX     X        XXXXX  X
X     X  X        X              X
X     X  X        X     X        X
X     X  XXXXXXX   XXXXX         XXX
```

THIS PROGRAM REPLACES ALL PREVIOUS VERSIONS OF HEC-1 KNOWN AS HEC1 (JAN 73), HEC1GS, HEC1DB, AND HEC1KW.

THE DEFINITIONS OF VARIABLES -RTIMP- AND -RTIOR- HAVE CHANGED FROM THOSE USED WITH THE 1973-STYLE INPUT STRUCTURE.
THE DEFINITION OF -AMSKK- ON RM-CARD WAS CHANGED WITH REVISIONS DATED 28 SEP 81. THIS IS THE FORTRAN77 VERSION
NEW OPTIONS: DAMBREAK OUTFLOW SUBMERGENCE , SINGLE EVENT DAMAGE CALCULATION, DSS:WRITE STAGE FREQUENCY,
DSS:READ TIME SERIES AT DESIRED CALCULATION INTERVAL LOSS RATE:GREEN AND AMPT INFILTRATION
KINEMATIC WAVE: NEW FINITE DIFFERENCE ALGORITHM

HEC-1 INPUT

```
LINE          ID.......1.......2.......3.......4.......5.......6.......7.......8.......9......10

  1           ID        MELROSE SUBBASIN:OVERLAND AND GULLIED
  2           ID        CN 1838   NM209, CLOVIS-NORTH
  3           ID        100 YEAR - 24 HOUR, RAINFALL EVENT
  4           ID
  5           ID        RAINFALL DISTRIBUTION: BALANCED STORM
  6           ID        RAINFALL DATA: NOAA ATLAS NO. 2, VOLUME IV-NEW MEXICO
  7           ID        COMPUTATION INTERVAL: 5 MINUTE
  8           IT       5       0       0     288
  9           IO       0       2       0
 10           KK      01  OVERLAND BASIN
 11           KO       0       0       0
 12           BA     3.7
 13           KM          100 YR. - 24 HR. EVENT
 14           PH                  0.91    1.79    3.15    3.68    4.07    4.70    5.40    6.10
 15           KM     SCS RUNOFF
 16           LS              74    10.4
 17           UD     1.57
 18           KK      G1  GULLEY BASIN
 19           BA     3.6
 20           KM          100 YR. - 24 HR. EVENT
 21           PH                  0.91    1.79    3.15    3.68    4.07    4.70    5.40    6.10
 22           LS              74     4.5
 23           UD     0.90
 24           KK      G2  BASIN OUTLET
 25           KO       4
 26           KM        COMBINE HYDROGRAPHS OF SUB`\INS
 27           HC       2
 28           ZZ
```

```
*****************************************
*                                       *
*   FLOOD HYDROGRAPH PACKAGE  (HEC-1)   *
*            SEPTEMBER 1990             *
*             VERSION 4.0               *
*                                       *
*  RUN DATE  01/21/1993  TIME  17:45:23 *
*                                       *
*****************************************
```

```
*****************************************
*                                       *
*    U.S. ARMY CORPS OF ENGINEERS       *
*    HYDROLOGIC ENGINEERING CENTER      *
*          609 SECOND STREET            *
*       DAVIS, CALIFORNIA 95616         *
*           (916) 756-1104              *
*                                       *
*****************************************
```

UNNAMED ARROYO ON MELROSE AIR FORCE RANGE
MELROSE SUBBASIN:OVERLAND AND GULLIED
CN 1838 NM209, CLOVIS-NORTH
100 YEAR - 24 HOUR, RAINFALL EVENT

RAINFALL DISTRIBUTION: BALANCED STORM
RAINFALL DATA: NOAA ATLAS NO. 2, VOLUME IV-NEW MEXICO
COMPUTATION INTERVAL: 5 MINUTE

```
 9 IO        OUTPUT CONTROL VARIABLES
                  IPRNT          0  PRINT CONTROL
                  IPLOT          2  PLOT CONTROL
                  QSCAL         0.  HYDROGRAPH PLOT SCALE

   IT        HYDROGRAPH TIME DATA
                   NMIN          5  MINUTES IN COMPUTATION INTERVAL
                  IDATE      1   0  STARTING DATE
                  ITIME       0000  STARTING TIME
                     NQ        288  NUMBER OF HYDROGRAPH ORDINATES
                 NDDATE      1   0  ENDING DATE
                 NDTIME       2355  ENDING TIME
                  ICENT         19  CENTURY MARK

            COMPUTATION INTERVAL     .08 HOURS
                 TOTAL TIME BASE   23.92 HOURS

       ENGLISH UNITS
            DRAINAGE AREA          SQUARE MILES
            PRECIPITATION DEPTH    INCHES
            LENGTH, ELEVATION      FEET
            FLOW                   CUBIC FEET PER SECOND
            STORAGE VOLUME         ACRE-FEET
            SURFACE AREA           ACRES
            TEMPERATURE            DEGREES FAHRENHEIT
```

*** ***

```
                 **************
                 *            *
10 KK            *     01     *        OVERLAND BASIN
                 *            *
                 **************

11 KO                OUTPUT CONTROL VARIABLES
                           IPRNT          0  PRINT CONTROL
                           IPLOT          2  PLOT CONTROL
                           QSCAL         0.  HYDROGRAPH PLOT SCALE
                                      100 YR. - 24 HR. EVENT
                                 SCS RUNOFF

                   SUBBASIN RUNOFF DATA

12 BA                SUBBASIN CHARACTERISTICS
                           TAREA       3.70  SUBBASIN AREA

                     PRECIPITATION DATA

14 PM                                     DEPTHS FOR   0-PERCENT HYPOTHETICAL STORM
                     ..... HYDRO-35 ......   ............... TP-40 ...............   ........... TP-49 ...........
                     5-MIN  15-MIN  60-MIN    2-HR    3-HR    6-HR   12-HR   24-HR   2-DAY   4-DAY   7-DAY  10-DAY
                       .91    1.79    3.15    3.68    4.07    4.70    5.40    6.10     .00     .00     .00     .00

                                                     STORM AREA =    3.70

16 LS                SCS LOSS RATE
                           STRTL        .70  INITIAL ABSTRACTION
                          CRVNBR      74.00  CURVE NUMBER
                           RTIMP      10.40  PERCENT IMPERVIOUS AREA

17 UD                SCS DIMENSIONLESS UNITGRAPH
                            TLAG       1.50  LAG

                                                   ***

                                                UNIT HYDROGRAPH
                                            92 END-OF-PERIOD ORDINATES
                 19.      41.      85.     133.     189.     254.     329.     420.     520.     634.
                753.     855.     954.    1023.    1086.    1123.    1150.    1156.    1156.    1150.
               1123.    1086.    1043.     999.     949.     898.     835.     769.     694.     624.
                561.     509.     465.     426.     388.     356.     325.     302.     279.     256.
                234.     216.     197.     178.     163.     150.     138.     125.     116.     106.
                 97.      88.      81.      74.      67.      61.      57.      52.      47.      44.
                 40.      37.      33.      31.      28.      26.      24.      22.      20.      18.
                 17.      15.      14.      13.      12.      11.      10.      10.       9.       8.
                  7.       7.       6.       5.       5.       4.       3.       3.       2.       2.
                  1.       0.
```

HYDROGRAPH AT STATION 01

DA	MON	HRMN	ORD	RAIN	LOSS	EXCESS	COMP Q	DA	MON	HRMN	ORD	RAIN	LOSS	EXCESS	COMP Q
1		0000	1	.00	.00	.00	0.	1		1200	145	.89	.27	.61	258.
1		0005	2	.00	.00	.00	0.	1		1205	146	.35	.09	.26	321.
1		0010	3	.00	.00	.00	0.	1		1210	147	.21	.05	.16	405.
1		0015	4	.00	.00	.00	0.	1		1215	148	.14	.03	.11	504.
1		0020	5	.00	.00	.00	0.	1		1220	149	.12	.03	.09	620.
1		0025	6	.00	.00	.00	0.	1		1225	150	.10	.02	.08	754.
1		0030	7	.00	.00	.00	0.	1		1230	151	.06	.01	.05	905.
1		0035	8	.00	.00	.00	0.	1		1235	152	.05	.01	.04	1075.
1		0040	9	.00	.00	.00	1.	1		1240	153	.05	.01	.04	1261.
1		0045	10	.00	.00	.00	1.	1		1245	154	.04	.01	.03	1459.
1		0050	11	.00	.00	.00	1.	1		1250	155	.04	.01	.03	1660.
1		0055	12	.00	.00	.00	1.	1		1255	156	.04	.01	.03	1850.
1		0100	13	.00	.00	.00	2.	1		1300	157	.04	.01	.03	2025.
1		0105	14	.00	.00	.00	2.	1		1305	158	.04	.01	.03	2175.
1		0110	15	.00	.00	.00	2.	1		1310	159	.03	.01	.03	2304.
1		0115	16	.00	.00	.00	3.	1		1315	160	.03	.01	.03	2404.
1		0120	17	.00	.00	.00	3.	1		1320	161	.03	.01	.03	2480.
1		0125	18	.00	.00	.00	4.	1		1325	162	.03	.01	.02	2529.
1		0130	19	.00	.00	.00	4.	1		1330	163	.02	.00	.02	2557.
1		0135	20	.00	.00	.00	5.	1		1335	164	.02	.00	.02	2566.
1		0140	21	.00	.00	.00	5.	1		1340	165	.02	.00	.02	2550.
1		0145	22	.00	.00	.00	6.	1		1345	166	.02	.00	.02	2515.
1		0150	23	.00	.00	.00	6.	1		1350	167	.02	.00	.02	2465.
1		0155	24	.00	.00	.00	7.	1		1355	168	.02	.00	.02	2403.
1		0200	25	.00	.00	.00	7.	1		1400	169	.02	.00	.02	2330.
1		0205	26	.00	.00	.00	8.	1		1405	170	.02	.00	.01	2245.
1		0210	27	.00	.00	.00	8.	1		1410	171	.02	.00	.01	2149.
1		0215	28	.00	.00	.00	8.	1		1415	172	.02	.00	.01	2043.
1		0220	29	.00	.00	.00	9.	1		1420	173	.02	.00	.01	1929.
1		0225	30	.00	.00	.00	9.	1		1425	174	.02	.00	.01	1816.
1		0230	31	.00	.00	.00	9.	1		1430	175	.02	.00	.01	1708.
1		0235	32	.00	.00	.00	10.	1		1435	176	.02	.00	.01	1609.
1		0240	33	.00	.00	.00	10.	1		1440	177	.01	.00	.01	1519.
1		0245	34	.00	.00	.00	10.	1		1445	178	.01	.00	.01	1434.
1		0250	35	.00	.00	.00	10.	1		1450	179	.01	.00	.01	1355.
1		0255	36	.00	.00	.00	11.	1		1455	180	.01	.00	.01	1282.
1		0300	37	.00	.00	.00	11.	1		1500	181	.01	.00	.01	1215.
1		0305	38	.00	.00	.00	11.	1		1505	182	.01	.00	.01	1154.
1		0310	39	.00	.00	.00	11.	1		1510	183	.01	.00	.01	1096.
1		0315	40	.00	.00	.00	11.	1		1515	184	.01	.00	.01	1041.
1		0320	41	.00	.00	.00	12.	1		1520	185	.01	.00	.01	988.
1		0325	42	.00	.00	.00	12.	1		1525	186	.01	.00	.01	939.
1		0330	43	.01	.00	.00	12.	1		1530	187	.01	.00	.01	892.
1		0335	44	.01	.00	.00	12.	1		1535	188	.01	.00	.01	847.
1		0340	45	.01	.00	.00	12.	1		1540	189	.01	.00	.01	806.
1		0345	46	.01	.00	.00	12.	1		1545	190	.01	.00	.01	768.
1		0350	47	.01	.00	.00	12.	1		1550	191	.01	.00	.01	732.

DA	MON	HRMN	ORD	RAIN	LOSS	EXCESS	COMP Q	*	DA	MON	HRMN	ORD	RAIN	LOSS	EXCESS	COMP Q
1		0355	48	.01	.00	.00	13.	*	1		1555	192	.01	.00	.01	698.
1		0400	49	.01	.00	.00	13.	*	1		1600	193	.01	.00	.01	667.
1		0405	50	.01	.00	.00	13.	*	1		1605	194	.01	.00	.01	638.
1		0410	51	.01	.00	.00	13.	*	1		1610	195	.01	.00	.01	610.
1		0415	52	.01	.00	.00	13.	*	1		1615	196	.01	.00	.01	584.
1		0420	53	.01	.00	.00	13.	*	1		1620	197	.01	.00	.01	560.
1		0425	54	.01	.00	.00	13.	*	1		1625	198	.01	.00	.01	537.
1		0430	55	.01	.00	.00	14.	*	1		1630	199	.01	.00	.01	515.
1		0435	56	.01	.01	.00	14.	*	1		1635	200	.01	.00	.01	495.
1		0440	57	.01	.01	.00	14.	*	1		1640	201	.01	.00	.01	477.
1		0445	58	.01	.01	.00	14.	*	1		1645	202	.01	.00	.01	459.
1		0450	59	.01	.01	.00	14.	*	1		1650	203	.01	.00	.01	443.
1		0455	60	.01	.01	.00	14.	*	1		1655	204	.01	.00	.01	427.
1		0500	61	.01	.01	.00	14.	*	1		1700	205	.01	.00	.01	413.
1		0505	62	.01	.01	.00	14.	*	1		1705	206	.01	.00	.01	399.
1		0510	63	.01	.01	.00	15.	*	1		1710	207	.01	.00	.01	386.
1		0515	64	.01	.01	.00	15.	*	1		1715	208	.01	.00	.01	374.
1		0520	65	.01	.01	.00	15.	*	1		1720	209	.01	.00	.01	363.
1		0525	66	.01	.01	.00	15.	*	1		1725	210	.01	.00	.01	352.
1		0530	67	.01	.01	.00	15.	*	1		1730	211	.01	.00	.01	342.
1		0535	68	.01	.01	.00	15.	*	1		1735	212	.01	.00	.01	332.
1		0540	69	.01	.01	.00	15.	*	1		1740	213	.01	.00	.01	323.
1		0545	70	.01	.01	.00	16.	*	1		1745	214	.01	.00	.01	315.
1		0550	71	.01	.01	.00	16.	*	1		1750	215	.01	.00	.01	307.
1		0555	72	.01	.01	.00	16.	*	1		1755	216	.01	.00	.01	299.
1		0600	73	.01	.01	.00	16.	*	1		1800	217	.01	.00	.01	292.
1		0605	74	.01	.01	.00	16.	*	1		1805	218	.01	.00	.01	285.
1		0610	75	.01	.01	.00	16.	*	1		1810	219	.01	.00	.01	279.
1		0615	76	.01	.01	.00	16.	*	1		1815	220	.01	.00	.01	273.
1		0620	77	.01	.01	.00	17.	*	1		1820	221	.01	.00	.01	267.
1		0625	78	.01	.01	.00	17.	*	1		1825	222	.01	.00	.01	262.
1		0630	79	.01	.01	.00	17.	*	1		1830	223	.01	.00	.01	256.
1		0635	80	.01	.01	.00	17.	*	1		1835	224	.01	.00	.01	251.
1		0640	81	.01	.01	.00	17.	*	1		1840	225	.01	.00	.01	245.
1		0645	82	.01	.01	.00	18.	*	1		1845	226	.01	.00	.01	240.
1		0650	83	.01	.01	.00	18.	*	1		1850	227	.01	.00	.01	234.
1		0655	84	.01	.01	.00	18.	*	1		1855	228	.01	.00	.01	229.
1		0700	85	.01	.01	.00	18.	*	1		1900	229	.01	.00	.00	224.
1		0705	86	.01	.01	.00	19.	*	1		1905	230	.01	.00	.00	219.
1		0710	87	.01	.01	.00	19.	*	1		1910	231	.01	.00	.00	214.
1		0715	88	.01	.01	.00	19.	*	1		1915	232	.01	.00	.00	209.
1		0720	89	.01	.01	.00	20.	*	1		1920	233	.01	.00	.00	204.
1		0725	90	.01	.01	.00	20.	*	1		1925	234	.01	.00	.00	200.
1		0730	91	.01	.01	.00	20.	*	1		1930	235	.01	.00	.00	195.
1		0735	92	.01	.01	.00	21.	*	1		1935	236	.01	.00	.00	191.
1		0740	93	.01	.01	.00	21.	*	1		1940	237	.01	.00	.00	187.
1		0745	94	.01	.01	.00	21.	*	1		1945	238	.01	.00	.00	184.
1		0750	95	.01	.01	.00	22.	*	1		1950	239	.01	.00	.00	180.
1		0755	96	.01	.01	.00	22.	*	1		1955	240	.01	.00	.00	177.
1		0800	97	.01	.01	.00	22.	*	1		2000	241	.01	.00	.00	174.
1		0805	98	.01	.01	.00	23.	*	1		2005	242	.01	.00	.00	171.
1		0810	99	.01	.01	.00	23.	*	1		2010	243	.01	.00	.00	168.
1		0815	100	.01	.01	.00	24.	*	1		2015	244	.01	.00	.00	166.
1		0820	101	.01	.01	.00	24.	*	1		2020	245	.01	.00	.00	163.

DA	MON	HRMN	ORD	RAIN	LOSS	EXCESS	COMP Q
1		0825	102	.01	.01	.00	24.
1		0830	103	.01	.01	.00	25.
1		0835	104	.01	.01	.00	25.
1		0840	105	.01	.01	.00	25.
1		0845	106	.01	.01	.00	26.
1		0850	107	.01	.01	.00	26.
1		0855	108	.01	.01	.00	27.
1		0900	109	.01	.01	.00	27.
1		0905	110	.01	.01	.00	28.
1		0910	111	.01	.01	.00	28.
1		0915	112	.01	.01	.00	28.
1		0920	113	.02	.01	.00	29.
1		0925	114	.02	.01	.00	30.
1		0930	115	.02	.01	.00	30.
1		0935	116	.02	.01	.00	31.
1		0940	117	.02	.01	.00	32.
1		0945	118	.02	.01	.00	32.
1		0950	119	.02	.01	.00	33.
1		0955	120	.02	.01	.00	34.
1		1000	121	.02	.02	.00	36.
1		1005	122	.02	.02	.00	37.
1		1010	123	.02	.02	.00	39.
1		1015	124	.02	.02	.00	40.
1		1020	125	.02	.02	.01	42.
1		1025	126	.02	.02	.01	45.
1		1030	127	.03	.02	.01	47.
1		1035	128	.03	.02	.01	50.
1		1040	129	.03	.02	.01	53.
1		1045	130	.03	.02	.01	56.
1		1050	131	.03	.02	.01	60.
1		1055	132	.04	.03	.01	65.
1		1100	133	.04	.02	.01	70.
1		1105	134	.04	.03	.01	75.
1		1110	135	.04	.03	.01	82.
1		1115	136	.04	.03	.02	89.
1		1120	137	.05	.03	.02	96.
1		1125	138	.05	.03	.02	105.
1		1130	139	.10	.06	.04	115.
1		1135	140	.11	.06	.05	127.
1		1140	141	.13	.07	.06	141.
1		1145	142	.19	.10	.10	158.
1		1150	143	.24	.11	.13	180.
1		1155	144	.51	.20	.31	210.

DA	MON	HRMN	ORD	RAIN	LOSS	EXCESS	COMP Q
1		2025	246	.01	.00	.00	161.
1		2030	247	.00	.00	.00	159.
1		2035	248	.00	.00	.00	157.
1		2040	249	.00	.00	.00	155.
1		2045	250	.00	.00	.00	153.
1		2050	251	.00	.00	.00	151.
1		2055	252	.00	.00	.00	149.
1		2100	253	.00	.00	.00	147.
1		2105	254	.00	.00	.00	145.
1		2110	255	.00	.00	.00	144.
1		2115	256	.00	.00	.00	142.
1		2120	257	.00	.00	.00	141.
1		2125	258	.00	.00	.00	139.
1		2130	259	.00	.00	.00	138.
1		2135	260	.00	.00	.00	136.
1		2140	261	.00	.00	.00	135.
1		2145	262	.00	.00	.00	134.
1		2150	263	.00	.00	.00	132.
1		2155	264	.00	.00	.00	131.
1		2200	265	.00	.00	.00	130.
1		2205	266	.00	.00	.00	129.
1		2210	267	.00	.00	.00	127.
1		2215	268	.00	.00	.00	126.
1		2220	269	.00	.00	.00	125.
1		2225	270	.00	.00	.00	124.
1		2230	271	.00	.00	.00	123.
1		2235	272	.00	.00	.00	122.
1		2240	273	.00	.00	.00	121.
1		2245	274	.00	.00	.00	120.
1		2250	275	.00	.00	.00	119.
1		2255	276	.00	.00	.00	118.
1		2300	277	.00	.00	.00	117.
1		2305	278	.00	.00	.00	116.
1		2310	279	.00	.00	.00	115.
1		2315	280	.00	.00	.00	115.
1		2320	281	.00	.00	.00	114.
1		2325	282	.00	.00	.00	113.
1		2330	283	.00	.00	.00	112.
1		2335	284	.00	.00	.00	111.
1		2340	285	.00	.00	.00	110.
1		2345	286	.00	.00	.00	110.
1		2350	287	.00	.00	.00	109.
1		2355	288	.00	.00	.00	108.

****

TOTAL RAINFALL = 6.07, TOTAL LOSS = 2.53, TOTAL EXCESS = 3.53

PEAK FLOW (CFS)	TIME (HR)		MAXIMUM AVERAGE FLOW 6-HR	24-HR	72-HR	23.92-HR
2566.	13.58	(CFS)	1157.	345.	345.	345.
		(INCHES)	2.906	3.451	3.451	3.451
		(AC-FT)	574.	681.	681.	681.

CUMULATIVE AREA = 3.70 SQ MI

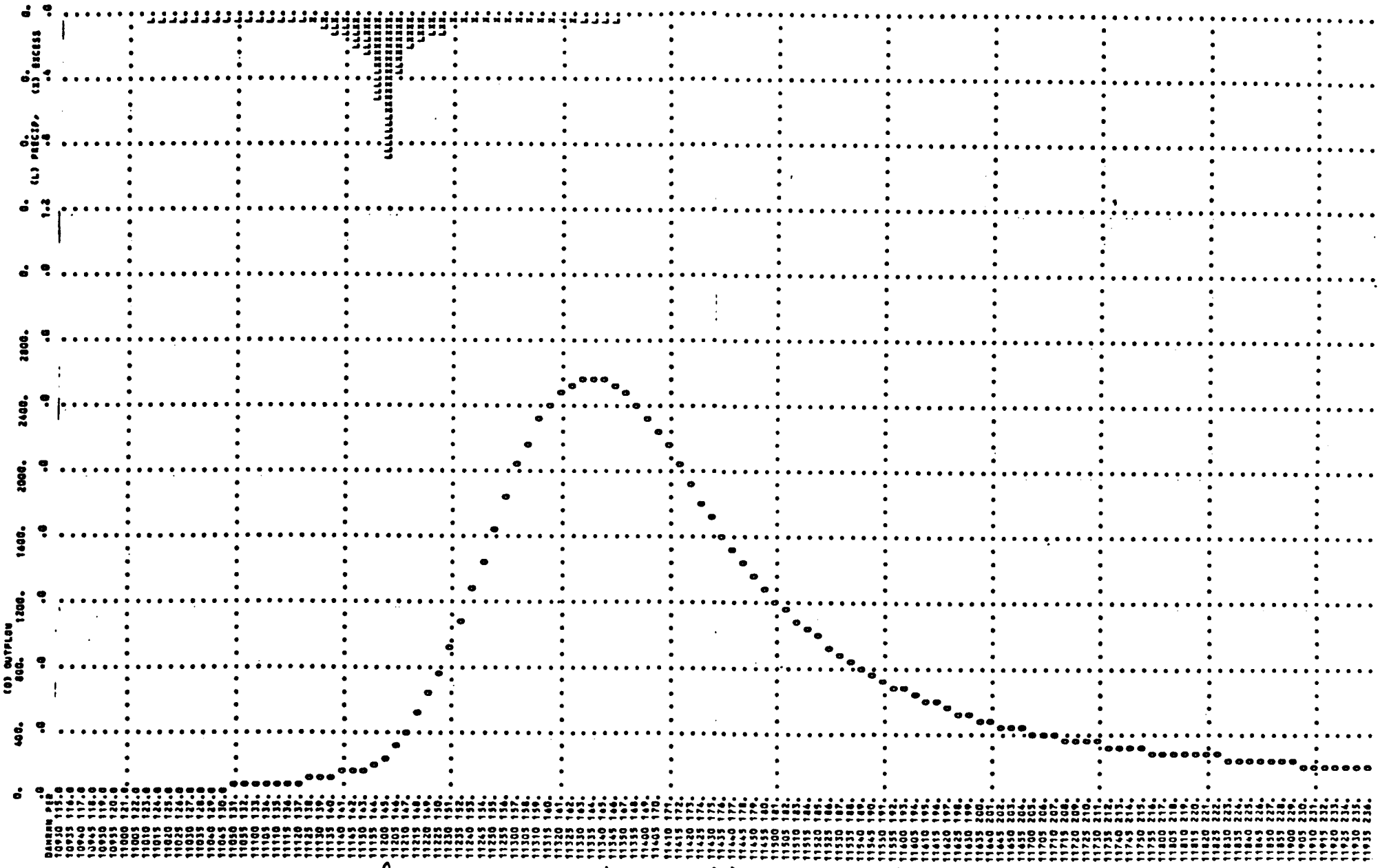

unnamed arroyo - Melrose Air Force Range
overland flow Hydrograph

```
*** *** *** *** *** *** *** *** *** *** *** *** *** *** *** *** *** *** *** *** *** *** *** *** *** *** *** *** *** *** *** *** *** ***

              **************
              *            *
18 KK         *      G1    *      GULLEY BASIN
              *            *
              **************
                                  100 YR. - 24 HR. EVENT

            SUBBASIN RUNOFF DATA

19 BA         SUBBASIN CHARACTERISTICS
                    TAREA        3.60  SUBBASIN AREA

              PRECIPITATION DATA

21 PH                                 DEPTHS FOR   0-PERCENT HYPOTHETICAL STORM
              ..... HYDRO-35 ......   ............... TP-40 ...............   ........... TP-49 ...........
              5-MIN  15-MIN  60-MIN    2-HR    3-HR    6-HR   12-HR   24-HR   2-DAY   4-DAY   7-DAY  10-DAY
                .91    1.79    3.15    3.68    4.07    4.70    5.40    6.10     .00     .00     .00     .00

                                                STORM AREA =    3.60

22 LS         SCS LOSS RATE
                    STRTL         .70  INITIAL ABSTRACTION
                   CRVNBR       74.00  CURVE NUMBER
                    RTIMP        4.50  PERCENT IMPERVIOUS AREA

23 UD         SCS DIMENSIONLESS UNITGRAPH
                     TLAG         .90  LAG

                                                     ***

                                                UNIT HYDROGRAPH
                                           56 END-OF-PERIOD ORDINATES
            49.      155.      293.      470.      698.      976.     1276.     1530.     1710.     1811.
          1841.     1835.     1772.     1667.     1547.     1411.     1246.     1050.      884.      759.
           655.      566.      493.      433.      375.      326.      277.      243.      210.      182.
           158.      136.      118.      100.       88.       76.       66.       57.       50.       43.
            37.       32.       27.       24.       21.       19.       17.       15.       13.       11.
             9.        7.        6.        4.        2.        1.
```

HYDROGRAPH AT STATION G1

DA	MON	HRMN	ORD	RAIN	LOSS	EXCESS	COMP Q	DA	MON	HRMN	ORD	RAIN	LOSS	EXCESS	COMP Q
1		0000	1	.00	.00	.00	0.	1		1200	145	.89	.29	.60	502.
1		0005	2	.00	.00	.00	0.	1		1205	146	.35	.09	.26	694.
1		0010	3	.00	.00	.00	0.	1		1210	147	.21	.05	.16	942.
1		0015	4	.00	.00	.00	0.	1		1215	148	.14	.03	.11	1247.
1		0020	5	.00	.00	.00	0.	1		1220	149	.12	.03	.09	1610.
1		0025	6	.00	.00	.00	0.	1		1225	150	.10	.02	.08	2018.
1		0030	7	.00	.00	.00	0.	1		1230	151	.06	.01	.05	2435.
1		0035	8	.00	.00	.00	1.	1		1235	152	.05	.01	.04	2812.
1		0040	9	.00	.00	.00	1.	1		1240	153	.05	.01	.04	3114.
1		0045	10	.00	.00	.00	1.	1		1245	154	.04	.01	.03	3327.
1		0050	11	.00	.00	.00	2.	1		1250	155	.04	.01	.03	3453.
1		0055	12	.00	.00	.00	2.	1		1255	156	.04	.01	.03	3501.
1		0100	13	.00	.00	.00	2.	1		1300	157	.04	.01	.03	3472.
1		0105	14	.00	.00	.00	3.	1		1305	158	.04	.01	.03	3376.
1		0110	15	.00	.00	.00	3.	1		1310	159	.03	.01	.03	3234.
1		0115	16	.00	.00	.00	3.	1		1315	160	.03	.01	.03	3052.
1		0120	17	.00	.00	.00	3.	1		1320	161	.03	.01	.02	2832.
1		0125	18	.00	.00	.00	4.	1		1325	162	.03	.01	.02	2589.
1		0130	19	.00	.00	.00	4.	1		1330	163	.02	.00	.02	2358.
1		0135	20	.00	.00	.00	4.	1		1335	164	.02	.00	.02	2152.
1		0140	21	.00	.00	.00	4.	1		1340	165	.02	.00	.02	1969.
1		0145	22	.00	.00	.00	4.	1		1345	166	.02	.00	.02	1804.
1		0150	23	.00	.00	.00	4.	1		1350	167	.02	.00	.02	1659.
1		0155	24	.00	.00	.00	4.	1		1355	168	.02	.00	.02	1529.
1		0200	25	.00	.00	.00	5.	1		1400	169	.02	.00	.02	1410.
1		0205	26	.00	.00	.00	5.	1		1405	170	.02	.00	.01	1301.
1		0210	27	.00	.00	.00	5.	1		1410	171	.02	.00	.01	1200.
1		0215	28	.00	.00	.00	5.	1		1415	172	.02	.00	.01	1111.
1		0220	29	.00	.00	.00	5.	1		1420	173	.02	.00	.01	1030.
1		0225	30	.00	.00	.00	5.	1		1425	174	.02	.00	.01	956.
1		0230	31	.00	.00	.00	5.	1		1430	175	.02	.00	.01	889.
1		0235	32	.00	.00	.00	5.	1		1435	176	.02	.00	.01	828.
1		0240	33	.00	.00	.00	5.	1		1440	177	.01	.00	.01	773.
1		0245	34	.00	.00	.00	5.	1		1445	178	.01	.00	.01	723.
1		0250	35	.00	.00	.00	5.	1		1450	179	.01	.00	.01	679.
1		0255	36	.00	.00	.00	5.	1		1455	180	.01	.00	.01	639.
1		0300	37	.00	.00	.00	5.	1		1500	181	.01	.00	.01	604.
1		0305	38	.00	.00	.00	5.	1		1505	182	.01	.00	.01	572.
1		0310	39	.00	.00	.00	5.	1		1510	183	.01	.00	.01	543.
1		0315	40	.00	.00	.00	6.	1		1515	184	.01	.00	.01	516.
1		0320	41	.00	.00	.00	6.	1		1520	185	.01	.00	.01	492.
1		0325	42	.00	.00	.00	6.	1		1525	186	.01	.00	.01	470.
1		0330	43	.01	.00	.00	6.	1		1530	187	.01	.00	.01	449.
1		0335	44	.01	.00	.00	6.	1		1535	188	.01	.00	.01	431.
1		0340	45	.01	.00	.00	6.	1		1540	189	.01	.00	.01	414.
1		0345	46	.01	.00	.00	6.	1		1545	190	.01	.00	.01	398.
1		0350	47	.01	.00	.00	6.	1		1550	191	.01	.00	.01	384.
1		0355	48	.01	.00	.00	6.	1		1555	192	.01	.00	.01	370.
1		0400	49	.01	.01	.00	6.	1		1600	193	.01	.00	.01	358.
1		0405	50	.01	.01	.00	6.	1		1605	194	.01	.00	.01	346.
1		0410	51	.01	.01	.00	6.	1		1610	195	.01	.00	.01	334.

DA	MON	HRMN	ORD	RAIN	LOSS	EXCESS	COMP Q
1		0415	52	.01	.01	.00	6.
1		0420	53	.01	.01	.00	6.
1		0425	54	.01	.01	.00	6.
1		0430	55	.01	.01	.00	6.
1		0435	56	.01	.01	.00	6.
1		0440	57	.01	.01	.00	6.
1		0445	58	.01	.01	.00	6.
1		0450	59	.01	.01	.00	6.
1		0455	60	.01	.01	.00	6.
1		0500	61	.01	.01	.00	7.
1		0505	62	.01	.01	.00	7.
1		0510	63	.01	.01	.00	7.
1		0515	64	.01	.01	.00	7.
1		0520	65	.01	.01	.00	7.
1		0525	66	.01	.01	.00	7.
1		0530	67	.01	.01	.00	7.
1		0535	68	.01	.01	.00	7.
1		0540	69	.01	.01	.00	7.
1		0545	70	.01	.01	.00	7.
1		0550	71	.01	.01	.00	7.
1		0555	72	.01	.01	.00	7.
1		0600	73	.01	.01	.00	7.
1		0605	74	.01	.01	.00	7.
1		0610	75	.01	.01	.00	7.
1		0615	76	.01	.01	.00	8.
1		0620	77	.01	.01	.00	8.
1		0625	78	.01	.01	.00	8.
1		0630	79	.01	.01	.00	8.
1		0635	80	.01	.01	.00	8.
1		0640	81	.01	.01	.00	8.
1		0645	82	.01	.01	.00	8.
1		0650	83	.01	.01	.00	9.
1		0655	84	.01	.01	.00	9.
1		0700	85	.01	.01	.00	9.
1		0705	86	.01	.01	.00	9.
1		0710	87	.01	.01	.00	9.
1		0715	88	.01	.01	.00	9.
1		0720	89	.01	.01	.00	10.
1		0725	90	.01	.01	.00	10.
1		0730	91	.01	.01	.00	10.
1		0735	92	.01	.01	.00	10.
1		0740	93	.01	.01	.00	10.
1		0745	94	.01	.01	.00	10.
1		0750	95	.01	.01	.00	11.
1		0755	96	.01	.01	.00	11.
1		0800	97	.01	.01	.00	11.
1		0805	98	.01	.01	.00	11.
1		0810	99	.01	.01	.00	11.
1		0815	100	.01	.01	.00	11.
1		0820	101	.01	.01	.00	11.
1		0825	102	.01	.01	.00	12.
1		0830	103	.01	.01	.00	12.
1		0835	104	.01	.01	.00	12.
1		0840	105	.01	.01	.00	12.
1		0845	106	.01	.01	.00	12.
1		0850	107	.01	.01	.00	13.

DA	MON	HRMN	ORD	RAIN	LOSS	EXCESS	COMP Q
1		1615	196	.01	.00	.01	324.
1		1620	197	.01	.00	.01	313.
1		1625	198	.01	.00	.01	304.
1		1630	199	.01	.00	.01	295.
1		1635	200	.01	.00	.01	286.
1		1640	201	.01	.00	.01	279.
1		1645	202	.01	.00	.01	273.
1		1650	203	.01	.00	.01	267.
1		1655	204	.01	.00	.01	261.
1		1700	205	.01	.00	.01	256.
1		1705	206	.01	.00	.01	251.
1		1710	207	.01	.00	.01	247.
1		1715	208	.01	.00	.01	243.
1		1720	209	.01	.00	.01	238.
1		1725	210	.01	.00	.01	234.
1		1730	211	.01	.00	.01	231.
1		1735	212	.01	.00	.01	227.
1		1740	213	.01	.00	.01	224.
1		1745	214	.01	.00	.01	220.
1		1750	215	.01	.00	.01	217.
1		1755	216	.01	.00	.01	214.
1		1800	217	.01	.00	.01	211.
1		1805	218	.01	.00	.01	208.
1		1810	219	.01	.00	.01	205.
1		1815	220	.01	.00	.01	202.
1		1820	221	.01	.00	.01	199.
1		1825	222	.01	.00	.01	195.
1		1830	223	.01	.00	.01	192.
1		1835	224	.01	.00	.01	188.
1		1840	225	.01	.00	.01	185.
1		1845	226	.01	.00	.01	181.
1		1850	227	.01	.00	.01	178.
1		1855	228	.01	.00	.00	174.
1		1900	229	.01	.00	.00	171.
1		1905	230	.01	.00	.00	167.
1		1910	231	.01	.00	.00	164.
1		1915	232	.01	.00	.00	161.
1		1920	233	.01	.00	.00	159.
1		1925	234	.01	.00	.00	156.
1		1930	235	.01	.00	.00	154.
1		1935	236	.01	.00	.00	151.
1		1940	237	.01	.00	.00	149.
1		1945	238	.01	.00	.00	147.
1		1950	239	.01	.00	.00	146.
1		1955	240	.01	.00	.00	144.
1		2000	241	.01	.00	.00	142.
1		2005	242	.01	.00	.00	140.
1		2010	243	.01	.00	.00	139.
1		2015	244	.01	.00	.00	137.
1		2020	245	.01	.00	.00	136.
1		2025	246	.01	.00	.00	134.
1		2030	247	.00	.00	.00	133.
1		2035	248	.00	.00	.00	132.
1		2040	249	.00	.00	.00	130.
1		2045	250	.00	.00	.00	129.
1		2050	251	.00	.00	.00	128.

DA	MON	HRMN	ORD	RAIN	LOSS	EXCESS	COMP Q
1		0855	108	.01	.01	.00	13.
1		0900	109	.01	.01	.00	13.
1		0905	110	.01	.01	.00	13.
1		0910	111	.01	.01	.00	14.
1		0915	112	.01	.01	.00	14.
1		0920	113	.02	.01	.00	14.
1		0925	114	.02	.01	.00	15.
1		0930	115	.02	.01	.00	15.
1		0935	116	.02	.01	.00	16.
1		0940	117	.02	.01	.00	17.
1		0945	118	.02	.02	.00	19.
1		0950	119	.02	.02	.00	20.
1		0955	120	.02	.02	.00	22.
1		1000	121	.02	.02	.00	24.
1		1005	122	.02	.02	.00	27.
1		1010	123	.02	.02	.00	29.
1		1015	124	.02	.02	.00	32.
1		1020	125	.02	.02	.00	36.
1		1025	126	.02	.02	.00	40.
1		1030	127	.03	.02	.01	44.
1		1035	128	.03	.02	.01	49.
1		1040	129	.03	.02	.01	54.
1		1045	130	.03	.03	.01	60.
1		1050	131	.03	.03	.01	67.
1		1055	132	.04	.03	.01	75.
1		1100	133	.04	.03	.01	84.
1		1105	134	.04	.03	.01	94.
1		1110	135	.04	.03	.01	105.
1		1115	136	.04	.03	.01	117.
1		1120	137	.05	.03	.02	131.
1		1125	138	.05	.04	.02	146.
1		1130	139	.10	.06	.04	164.
1		1135	140	.11	.07	.04	185.
1		1140	141	.13	.07	.06	212.
1		1145	142	.19	.10	.09	248.
1		1150	143	.24	.12	.13	297.
1		1155	144	.51	.21	.29	373.

DA	MON	HRMN	ORD	RAIN	LOSS	EXCESS	COMP Q
1		2055	252	.00	.00	.00	127.
1		2100	253	.00	.00	.00	126.
1		2105	254	.00	.00	.00	125.
1		2110	255	.00	.00	.00	124.
1		2115	256	.00	.00	.00	122.
1		2120	257	.00	.00	.00	121.
1		2125	258	.00	.00	.00	120.
1		2130	259	.00	.00	.00	119.
1		2135	260	.00	.00	.00	118.
1		2140	261	.00	.00	.00	118.
1		2145	262	.00	.00	.00	117.
1		2150	263	.00	.00	.00	116.
1		2155	264	.00	.00	.00	115.
1		2200	265	.00	.00	.00	114.
1		2205	266	.00	.00	.00	113.
1		2210	267	.00	.00	.00	112.
1		2215	268	.00	.00	.00	111.
1		2220	269	.00	.00	.00	111.
1		2225	270	.00	.00	.00	110.
1		2230	271	.00	.00	.00	109.
1		2235	272	.00	.00	.00	108.
1		2240	273	.00	.00	.00	107.
1		2245	274	.00	.00	.00	107.
1		2250	275	.00	.00	.00	106.
1		2255	276	.00	.00	.00	105.
1		2300	277	.00	.00	.00	104.
1		2305	278	.00	.00	.00	104.
1		2310	279	.00	.00	.00	103.
1		2315	280	.00	.00	.00	102.
1		2320	281	.00	.00	.00	102.
1		2325	282	.00	.00	.00	101.
1		2330	283	.00	.00	.00	100.
1		2335	284	.00	.00	.00	100.
1		2340	285	.00	.00	.00	99.
1		2345	286	.00	.00	.00	98.
1		2350	287	.00	.00	.00	98.
1		2355	288	.00	.00	.00	97.

****

TOTAL RAINFALL = 6.07, TOTAL LOSS = 2.70, TOTAL EXCESS = 3.37

PEAK FLOW (CFS)	TIME (HR)
3501.	12.92

MAXIMUM AVERAGE FLOW

	6-HR	24-HR	72-HR	23.92-HR
(CFS)	1105.	323.	323.	323.
(INCHES)	2.854	3.321	3.321	3.321
(AC-FT)	548.	638.	638.	638.

CUMULATIVE AREA = 3.60 SQ MI

STATION 61

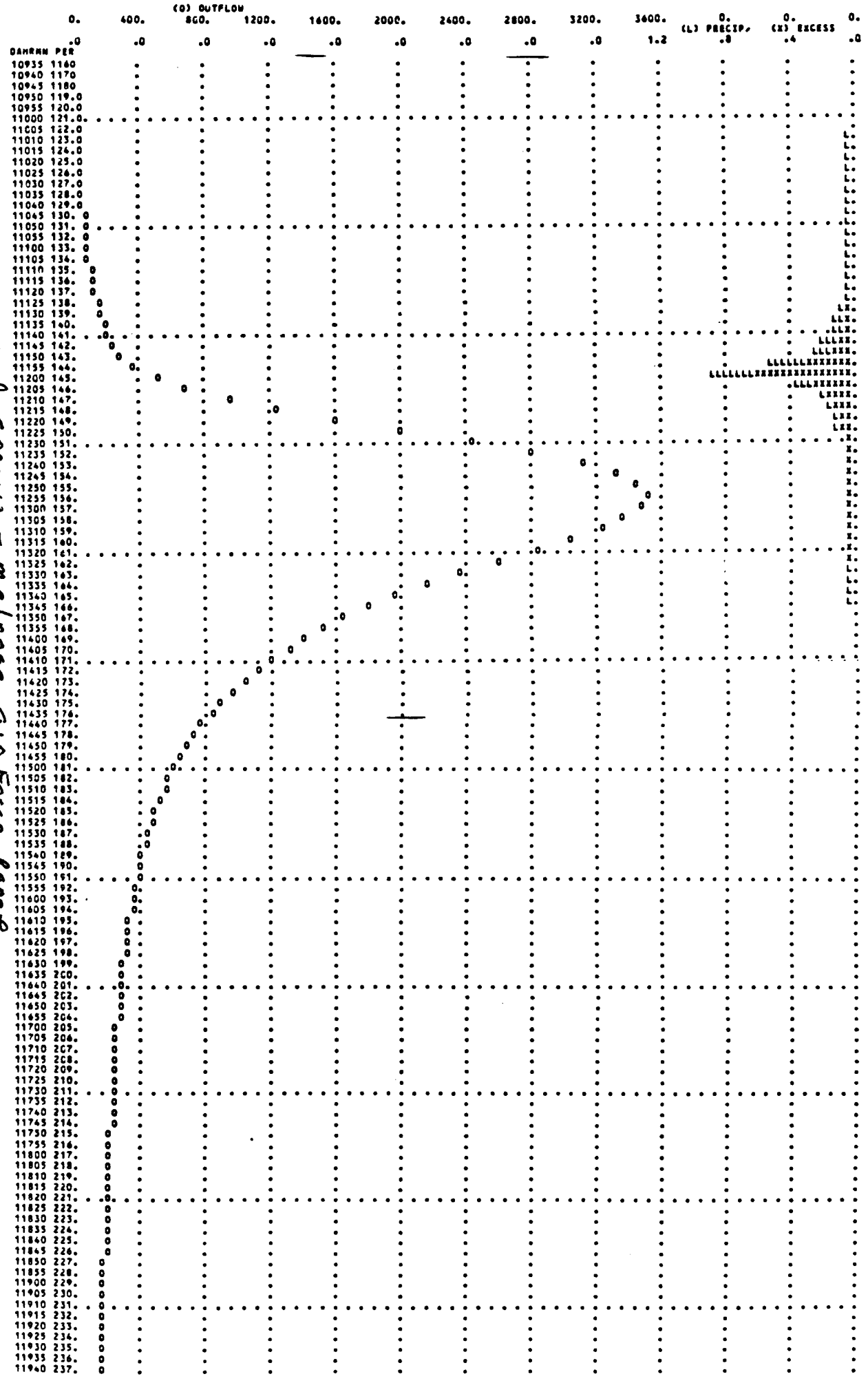

unnamed arroyo - melrose air force range
channel or gully flow hydrograph

```
                 **************
                 *            *
24 KK            *     G2     *        BASIN OUTLET
                 *            *
                 **************

25 KO            OUTPUT CONTROL VARIABLES
                       IPRNT          4  PRINT CONTROL
                       IPLOT          2  PLOT CONTROL
                       QSCAL         0.  HYDROGRAPH PLOT SCALE
                             COMBINE HYDROGRAPHS OF SUBBAINS

27 HC            HYDROGRAPH COMBINATION
                       ICOMP          2  NUMBER OF HYDROGRAPHS TO COMBINE
```

***
STATION G2

(Q) OUTFLOW

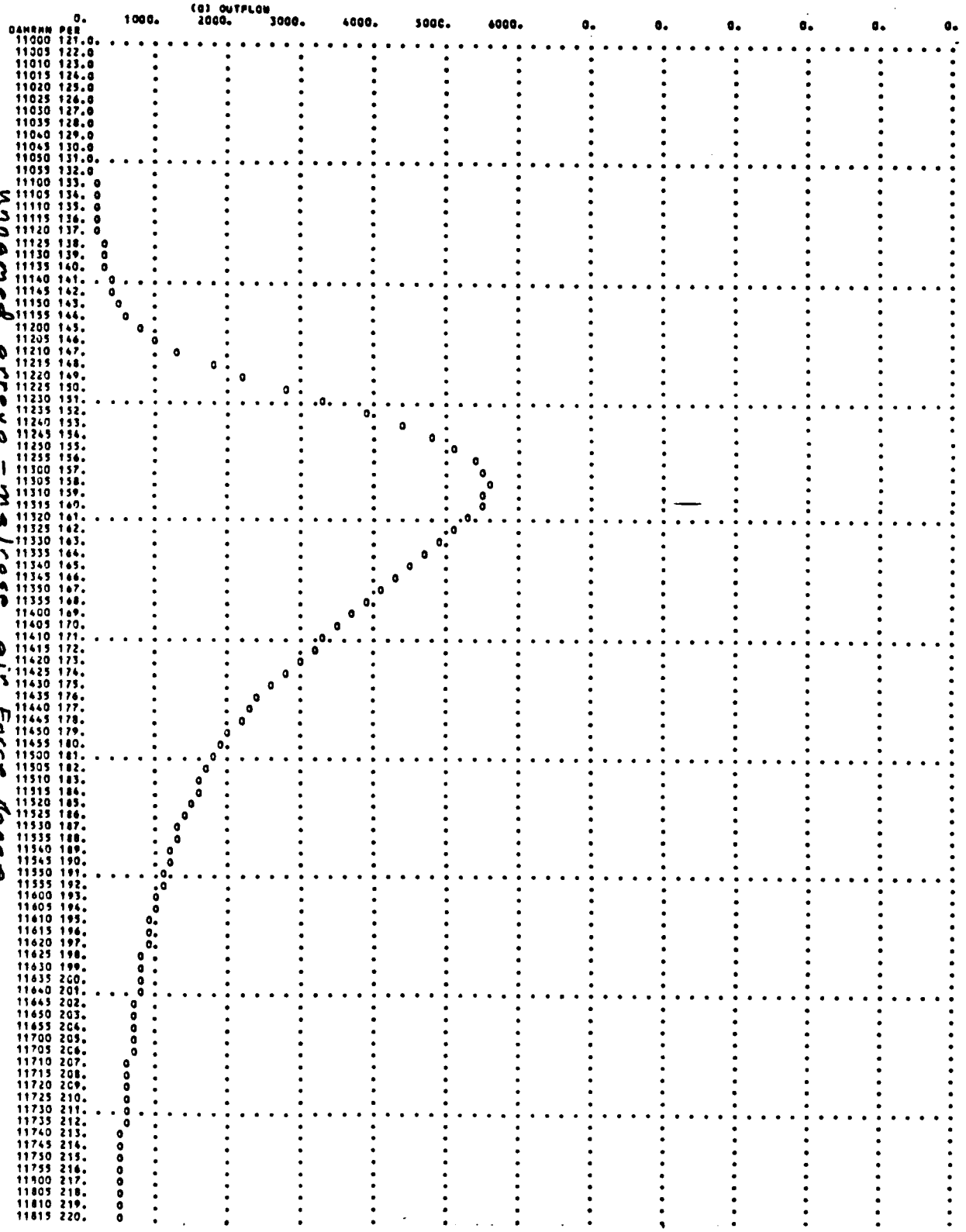

Unnamed arroyo - Malrose air Force Range
overland flow plus channel flow hydrograph

RUNOFF SUMMARY
FLOW IN CUBIC FEET PER SECOND
TIME IN HOURS, AREA IN SQUARE MILES

	OPERATION	STATION	PEAK FLOW	TIME OF PEAK	AVERAGE FLOW FOR MAXIMUM PERIOD 6-HOUR	24-HOUR	72-HOUR	BASIN AREA	MAXIMUM STAGE	TIME OF MAX STAGE
+	HYDROGRAPH AT	01	2566.	13.58	1157.	345.	345.	3.70		
+	HYDROGRAPH AT	G1	3501.	12.92	1105.	323.	323.	3.60		
+	2 COMBINED AT	G2	5552.	13.08	2258.	667.	667.	7.30		

*** NORMAL END OF HEC-1 ***

```
T1          UNNAMED ARROYO (MELROSE BOMBING RANGE)
J1          0.05,.10,.02,1.0
J3          3 23 26 6 16 17 5 28 27 29 30 14 15 13  *
*
D           5550
SK           .002
XT    4     1940 * * * .009
GR          0,101.6 50,101.1 262,97.9 296,95.2 334,97.8 503,98.3 743,97.6
N           .022
XS    8     3300 * * * .009
T           -12.8
N           .022
XS    7     2960  * * * .009
GT          -9.6
N           .022
XS    6     2620 * * * .009
GT          -6.4
N           .022
XS    5     2230 * * * .009
GT          -3.2
N           .022
XS    4     1940
GT
N           .022
XS    3     1600
GR          0,105.4 230,102.1 380,101.1 556,99.7 672,99.5 723,98.4 821,101.1
GR          975,102.4 1084,102.3 2000,102.6
N           .022,.024
SA          1000
XS    2     1090
GR          0,106.4 67,105.7 257,104.1 387,102.0 482,98.9 552,99.8 690,104.0
GR          803,103.9 1009,103.4 2000,104.2
N           .022, .024
SA          700
XS    1     485
GR          0,110.6 243,109.2 448,106.9 536,105.1 613,99.9 673,101.8 864,107.3
GR          1036,107.0 1252,105.7 1482,104.8 2000,106.2
N           .022, .024
SA          865
PX    1
PX    2
PX    3
PX    4
PX    5
PX    6
PX    7
PX    8
EX          1
ER
```

```
WSPRO          FEDERAL HIGHWAY ADMINISTRATION - U. S. GEOLOGICAL SURVEY
V060188            MODEL  FOR  WATER-SURFACE  PROFILE  COMPUTATIONS

           *** RUN DATE & TIME: 01-29-93  13:03

  T1        UNNAMED ARROYO (MELROSE BOMBING RANGE)
  J1        0.05,.10,.02,1.0

J1 RECORD PARAMETERS:
DELTAY = 0.05   YTOL = 0.10   QTOL = 0.02   FNTEST = 1.00   IHFNOJ = -1

  J3        3 23 26 6 16 17 5 28 27 29 30 14 15 13  *
  *
  Q         5550
*** Q-DATA FOR SEC-ID, ISEQ =            1
  SK          .002
```

```
WSPRO          FEDERAL HIGHWAY ADMINISTRATION - U. S. GEOLOGICAL SURVEY
V060188            MODEL  FOR  WATER-SURFACE  PROFILE  COMPUTATIONS

        UNNAMED ARROYO (MELROSE BOMBING RANGE)
           *** RUN DATE & TIME: 01-29-93  13:03

*** START PROCESSING CROSS SECTION - "4     "
  XT    4     1940 * * * .009
+++014 WARNING:  EXCESS DATA ITEMS IGNORED.
  GR          0,101.6 50,101.1 262,97.9 296,95.2 334,97.8 503,98.3 743,97.6
  N           .022

*** FINISH PROCESSING CROSS SECTION - "4     "
*** TEMPLATE CROSS SECTION "4     " SAVED INTERNALLY.
```

```
WSPRO          FEDERAL HIGHWAY ADMINISTRATION - U. S. GEOLOGICAL SURVEY
V060188            MODEL  FOR  WATER-SURFACE  PROFILE  COMPUTATIONS

        UNNAMED ARROYO (MELROSE BOMBING RANGE)
           *** RUN DATE & TIME: 01-29-93  13:03

*** START PROCESSING CROSS SECTION - "8     "
  XS   8     3300 * * * .009
  GT         -12.8
  N          .022

*** FINISH PROCESSING CROSS SECTION - "8     "
*** CROSS SECTION "8     " WRITTEN TO DISK, RECORD NO. =  1

--- DATA SUMMARY FOR SECID "8     " AT SRD =   3300.  ERR-CODE =      0

     SKEW      IHFNO     VSLOPE        EK        CK
      0.0        0.     0.0090      0.50      0.00

X-Y COORDINATE PAIRS  (NGP =   7):
       X       Y          X       Y          X       Y          X       Y
     0.0   88.80       50.0   88.30      262.0   85.10      296.0   82.40
   334.0   85.00      503.0   85.50      743.0   84.80

 X-  : \X-MIN POINTS:
    XMIN       Y          X    YMIN       XMAX       Y          X    YMAX
     0.0   88.80      296.0   82.40      743.0   84.80        0.0   88.80

ROUGHNESS COEFFICIENTS (NSA =  1):
        0.022
```

```
WSPRO          FEDERAL HIGHWAY ADMINISTRATION - U. S. GEOLOGICAL SURVEY
V060188            MODEL  FOR  WATER-SURFACE  PROFILE  COMPUTATIONS

        UNNAMED ARROYO (MELROSE BOMBING RANGE)
           *** RUN DATE & TIME: 01-29-93  13:03

*** START PROCESSING CROSS SECTION - "7     "
  XS   7    2960  * * * .009
  GT        -9.6
  N          .022

*** FINISH PROCESSING CROSS SECTION - "7     "
*** CROSS SECTION "7     " WRITTEN TO DISK, RECORD NO. =  2

--- DATA SUMMARY FOR SECID "7     " AT SRD =   2960.  ERR-CODE =      0

     SKEW      IHFNO     VSLOPE        EK        CK
      0.0        0.     0.0090      0.50      0.00

X-Y COORDINATE PAIRS  (NGP =   7):
       X       Y          X       Y          X       Y          X       Y
     0.0   92.00       50.0   91.50      262.0   88.30      296.0   85.60
   334.0   88.20      503.0   88.70      743.0   88.00

 X-   .AX-MIN POINTS:
     XMIN       Y          X    YMIN       XMAX       Y          X    YMAX
      0.0   92.00      296.0   85.60      743.0   88.00        0.0   92.00

ROUGHNESS COEFFICIENTS (NSA =  1):
        0.022
```

```
WSPRO          FEDERAL HIGHWAY ADMINISTRATION - U. S. GEOLOGICAL SURVEY
V060188            MODEL  FOR  WATER-SURFACE  PROFILE  COMPUTATIONS

        UNNAMED ARROYO (MELROSE BOMBING RANGE)
           *** RUN DATE & TIME: 01-29-93  13:03

*** START PROCESSING CROSS SECTION - "6     "
  XS   6     2620 * * * .009
  GT         -6.4
  N          .022

*** FINISH PROCESSING CROSS SECTION - "6     "
*** CROSS SECTION "6     " WRITTEN TO DISK, RECORD NO. =  3

--- DATA SUMMARY FOR SECID "6     " AT SRD =   2620.  ERR-CODE =      0

     SKEW      IHFNO     VSLOPE        EK        CK
      0.0         0.     0.0090      0.50      0.00

X-Y COORDINATE PAIRS  (NGP =   7):
       X       Y          X       Y          X       Y          X       Y
     0.0   95.20       50.0   94.70      262.0   91.50      296.0   88.80
   334.0   91.40      503.0   91.90      743.0   91.20

 X-Y  AX-MIN POINTS:
     MIN       Y          X    YMIN       XMAX       Y          X    YMAX
     0.0   95.20      296.0   88.80      743.0   91.20        0.0   95.20

ROUGHNESS COEFFICIENTS (NSA =  1):
        0.022
```

```
WSPRO          FEDERAL HIGHWAY ADMINISTRATION - U. S. GEOLOGICAL SURVEY
V060188            MODEL  FOR  WATER-SURFACE  PROFILE  COMPUTATIONS

        UNNAMED ARROYO (MELROSE BOMBING RANGE)
           *** RUN DATE & TIME: 01-29-93  13:03

*** START PROCESSING CROSS SECTION - "5     "
  XS   5    2280 * * * .009
  GT        -3.2
  N          .022

*** FINISH PROCESSING CROSS SECTION - "5     "
*** CROSS SECTION "5     " WRITTEN TO DISK, RECORD NO. =  4

--- DATA SUMMARY FOR SECID "5     " AT SRD =   2280.  ERR-CODE =      0

     SKEW      IHFNO     VSLOPE        EK        CK
      0.0        0.     0.0090      0.50      0.00

X-Y COORDINATE PAIRS  (NGP =   7):
       X       Y          X       Y          X       Y          X       Y
     0.0   98.40       50.0   97.90      262.0   94.70      296.0   92.00
   334.0   94.60      503.0   95.10      743.0   94.40

 X-   AX-MIN POINTS:
     XMIN       Y          X    YMIN       XMAX       Y          X    YMAX
     0.0   98.40      296.0   92.00      743.0   94.40        0.0   98.40

ROUGHNESS COEFFICIENTS (NSA =  1):
        0.022
```

```
WSPRO          FEDERAL HIGHWAY ADMINISTRATION - U. S. GEOLOGICAL SURVEY
V060188            MODEL  FOR  WATER-SURFACE  PROFILE  COMPUTATIONS

        UNNAMED ARROYO (MELROSE BOMBING RANGE)
           *** RUN DATE & TIME: 01-29-93  13:03

*** START PROCESSING CROSS SECTION - "4     "
  XS   4     1940
  GT
  N          .022

*** FINISH PROCESSING CROSS SECTION - "4     "
*** CROSS SECTION "4     " WRITTEN TO DISK, RECORD NO. =  5

--- DATA SUMMARY FOR SECID "4     " AT SRD =   1940.  ERR-CODE =      0

     SKEW      IHFNO     VSLOPE        EK        CK
      0.0         0.     0.0090      0.50      0.00

X-Y COORDINATE PAIRS  (NGP =   7):
       X       Y          X       Y          X       Y          X       Y
     0.0   101.60      50.0   101.10     262.0   97.90     296.0   95.20
   334.0    97.80     503.0    98.30     743.0   97.60

 X-Y  \X-MIN POINTS:
     XMIN       Y          X    YMIN      XMAX       Y          X    YMAX
     0.0   101.60     296.0   95.20     743.0   97.60        0.0  101.60

ROUGHNESS COEFFICIENTS (NSA =  1):
        0.022
```

```
WSPRO          FEDERAL HIGHWAY ADMINISTRATION - U. S. GEOLOGICAL SURVEY
V060188            MODEL  FOR  WATER-SURFACE  PROFILE  COMPUTATIONS

        UNNAMED ARROYO (MELROSE BOMBING RANGE)
           *** RUN DATE & TIME: 01-29-93  13:03

*** START PROCESSING CROSS SECTION - "3     "
  XS   3     1600
  GR         0,105.4 230,102.1 380,101.1 556,99.7 672,99.5 723,98.4 821,101.1
  GR         975,102.4 1084,102.3 2000,102.6
  N          .022,.024
  SA         1000

*** FINISH PROCESSING CROSS SECTION - "3     "
*** CROSS SECTION "3     " WRITTEN TO DISK, RECORD NO. =  6

--- DATA SUMMARY FOR SECID "3     " AT SRD =   1600.  ERR-CODE =      0

     SKEW      IHFNO     VSLOPE        EK        CK
      0.0        0.     0.0090      0.50      0.00

X-Y COORDINATE PAIRS  (NGP =  10):
       X       Y          X       Y          X       Y          X       Y
      0.0  105.40      230.0  102.10      380.0  101.10      556.0   99.70
      2.0   99.50      723.0   98.40      821.0  101.10      975.0  102.40
   [illegible]4.0  102.30     2000.0  102.60

 X-Y MAX-MIN POINTS:
     XMIN       Y          X    YMIN       XMAX       Y          X    YMAX
      0.0  105.40      723.0   98.40    2000.0  102.60        0.0  105.40

SUBAREA BREAKPOINTS (NSA =  2):
       1000.

ROUGHNESS COEFFICIENTS (NSA =  2):
        0.022   0.024
```

```
WSPRO          FEDERAL HIGHWAY ADMINISTRATION - U. S. GEOLOGICAL SURVEY
V060188            MODEL  FOR  WATER-SURFACE  PROFILE  COMPUTATIONS

        UNNAMED ARROYO (MELROSE BOMBING RANGE)
           *** RUN DATE & TIME: 01-29-93  13:03

*** START PROCESSING CROSS SECTION - "2     "
  XS   2     1090
  GR         0,106.4 67,105.7 257,104.1 387,102.0 482,98.9 552,99.8 690,104.0
  GR         803,103.9 1009,103.4 2000,104.2
  N          .022, .024
  SA         700

*** FINISH PROCESSING CROSS SECTION - "2     "
*** CROSS SECTION "2     " WRITTEN TO DISK, RECORD NO. =  7

--- DATA SUMMARY FOR SECID "2     " AT SRD =   1090.  ERR-CODE =      0

     SKEW      IHFNO     VSLOPE        EK        CK
      0.0        0.     0.0090      0.50      0.00

X-Y COORDINATE PAIRS  (NGP =  10):
        X       Y          X       Y          X       Y          X       Y
      0.0  106.40       67.0  105.70     257.0  104.10     387.0  102.00
     `2.0   98.90      552.0   99.80     690.0  104.00     803.0  103.90
   . ,9.0  103.40     2000.0  104.20

 X-Y MAX-MIN POINTS:
     XMIN       Y          X    YMIN      XMAX       Y          X    YMAX
      0.0  106.40      482.0   98.90    2000.0  104.20       0.0  106.40

SUBAREA BREAKPOINTS (NSA =  2):
        700.

ROUGHNESS COEFFICIENTS (NSA =  2):
        0.022   0.024
```

```
WSPRO          FEDERAL HIGHWAY ADMINISTRATION - U. S. GEOLOGICAL SURVEY
V060188            MODEL  FOR  WATER-SURFACE  PROFILE  COMPUTATIONS

        UNNAMED ARROYO (MELROSE BOMBING RANGE)
           *** RUN DATE & TIME: 01-29-93  13:03

*** START PROCESSING CROSS SECTION - "1     "
  XS   1     485
  GR         0,110.6 243,109.2 448,106.9 536,105.1 613,99.9 673,101.8 864,107.3
  GR         1036,107.0 1252,105.7 1482,104.8 2000,106.2
  N          .022, .024
  SA         865
  PX   1

*** FINISH PROCESSING CROSS SECTION - "1     "
*** CROSS SECTION "1     " WRITTEN TO DISK, RECORD NO. =  8

--- DATA SUMMARY FOR SECID "1     " AT SRD =    485.  ERR-CODE =      0

     SKEW      IHFNO    VSLOPE        EK        CK
      0.0        0.    0.0090      0.50      0.00

X-Y COORDINATE PAIRS  (NGP =  11):
       X       Y          X       Y          X       Y          X       Y
     0.0  110.60      243.0  109.20      448.0  106.90      536.0  105.10
     3.0   99.90      673.0  101.80      864.0  107.30     1036.0  107.00
  1252.0  105.70     1482.0  104.80     2000.0  106.20

 X-Y MAX-MIN POINTS:
     XMIN       Y          X    YMIN       XMAX       Y          X    YMAX
     0.0  110.60      613.0   99.90     2000.0  106.20        0.0  110.60

SUBAREA BREAKPOINTS (NSA =  2):
        865.

ROUGHNESS COEFFICIENTS (NSA =  2):
        0.022   0.024
```

unnamed Arroyo - Melrose Air Force Range

--- CROSS SECTION OUTLINE PLOT --- SEQ-NOB = 1 SEC-REF-DIST = 3300.0 SECID = '8

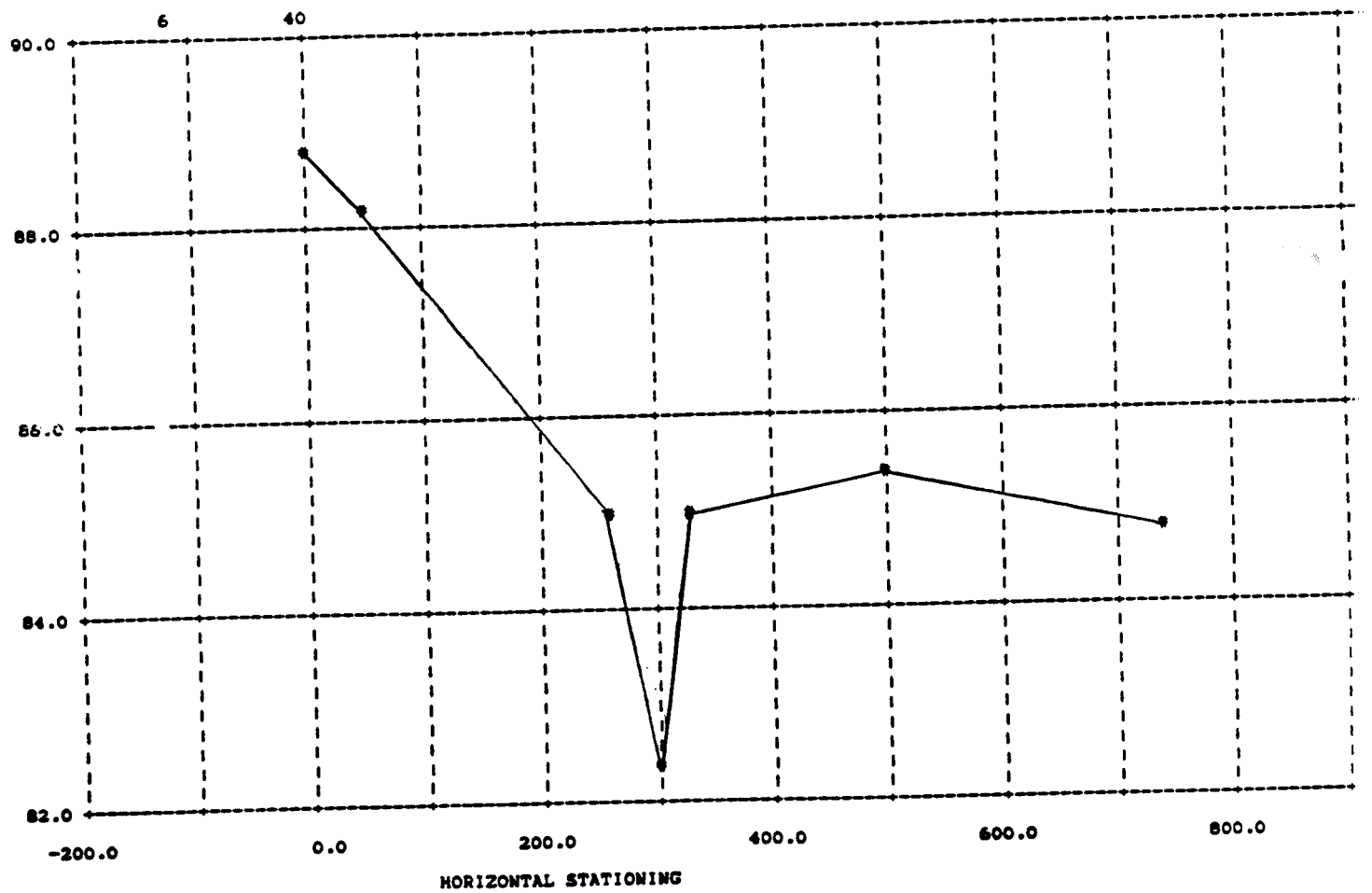

EX 1

+++ BEGINNING PROFILE CALCULATIONS -- 1

unnamed arroyo - Melrose Air Force Range

--- CROSS SECTION OUTLINE PLOT --- SEQ-NOB = 8 SEC-REF-DIST = 485.0 SECID = '1 '

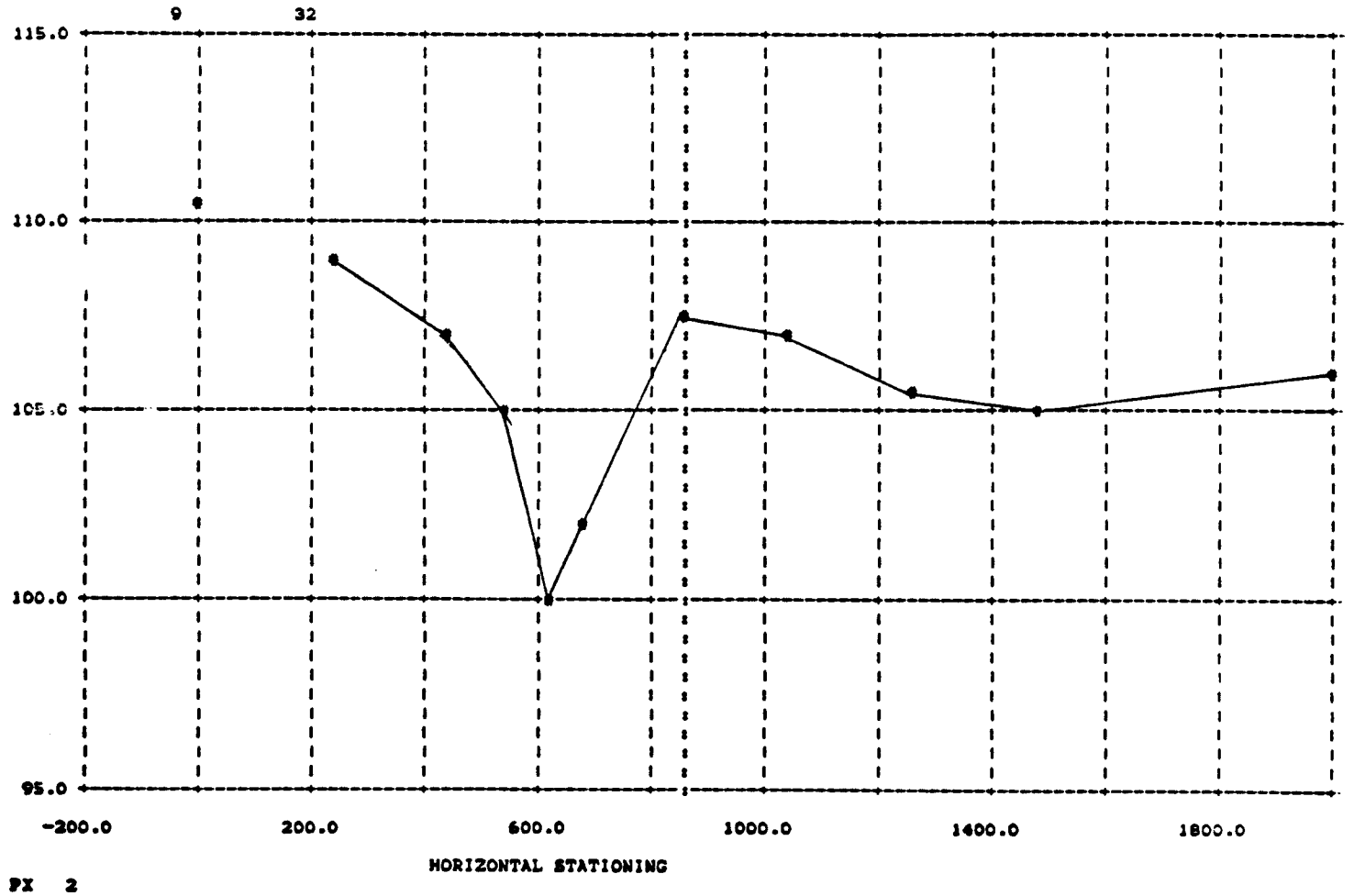

PX 2

unnamed Arroyo - Melrose Air Force Range

--- CROSS SECTION OUTLINE PLOT --- SEQ-NOB = 7 SEC-REF-DIST = 1090.0 SECID = '2

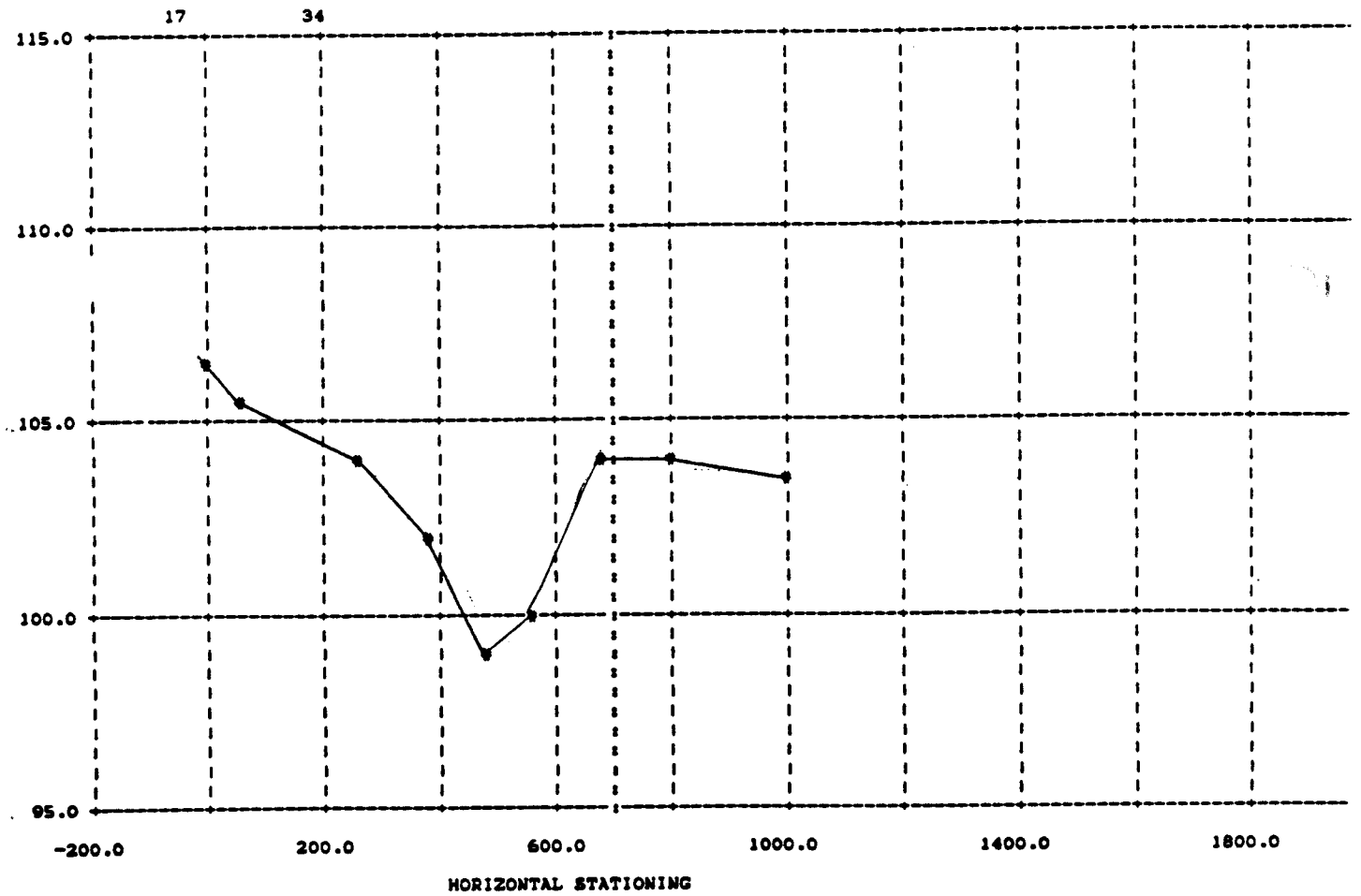

PX 3

unnamed arroyo - Melrose Air Force Range

--- CROSS SECTION OUTLINE PLOT --- SEQ-NOB = 6 SEC-REF-DIST = 1600.0 SECID = '3

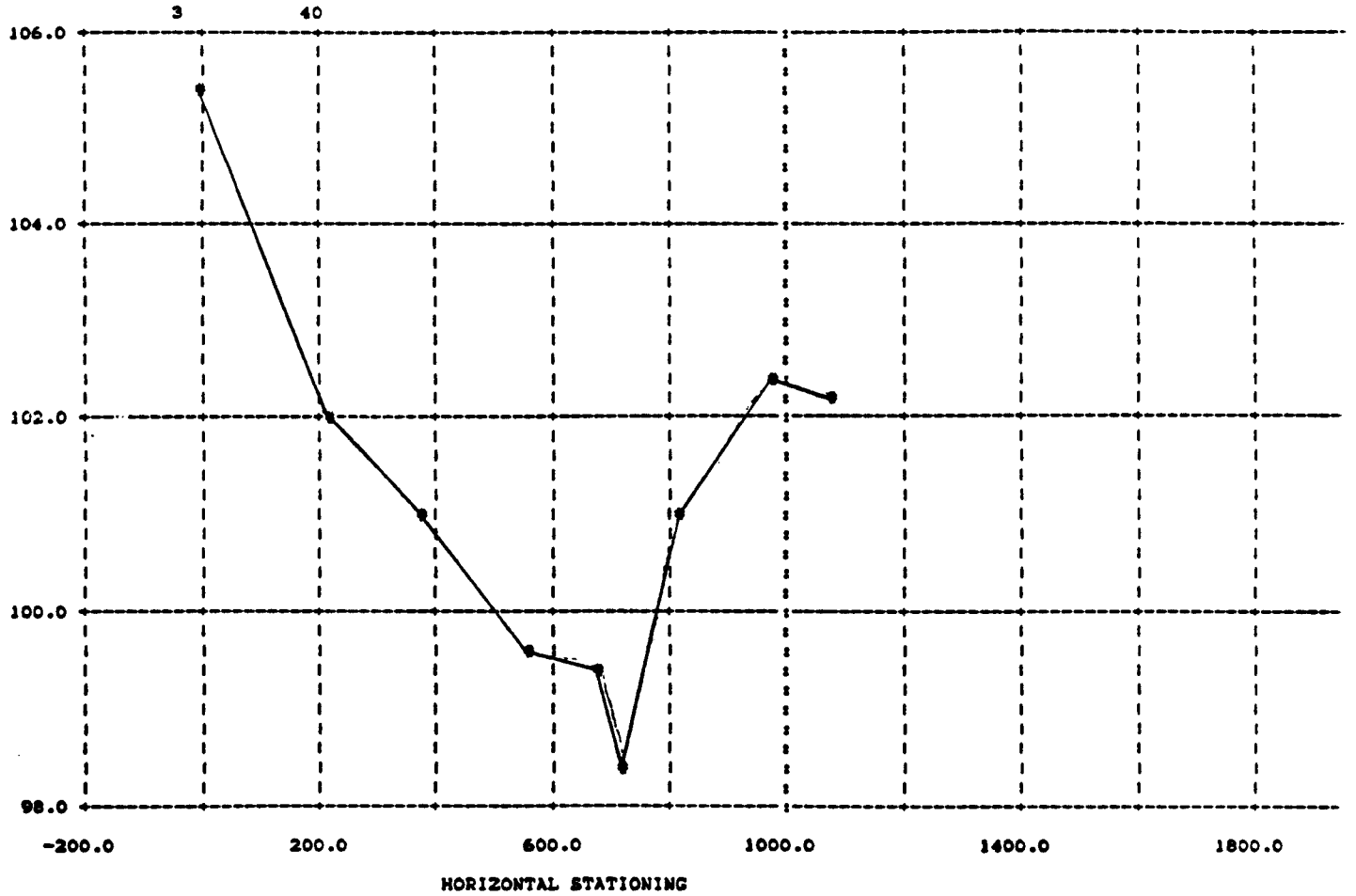

PX 4

unnamed arroyo – Melrose Air Force Range

--- CROSS SECTION OUTLINE PLOT --- SEQ-NOB = 5 SEC-REF-DIST = 1940.0 SECID = '4

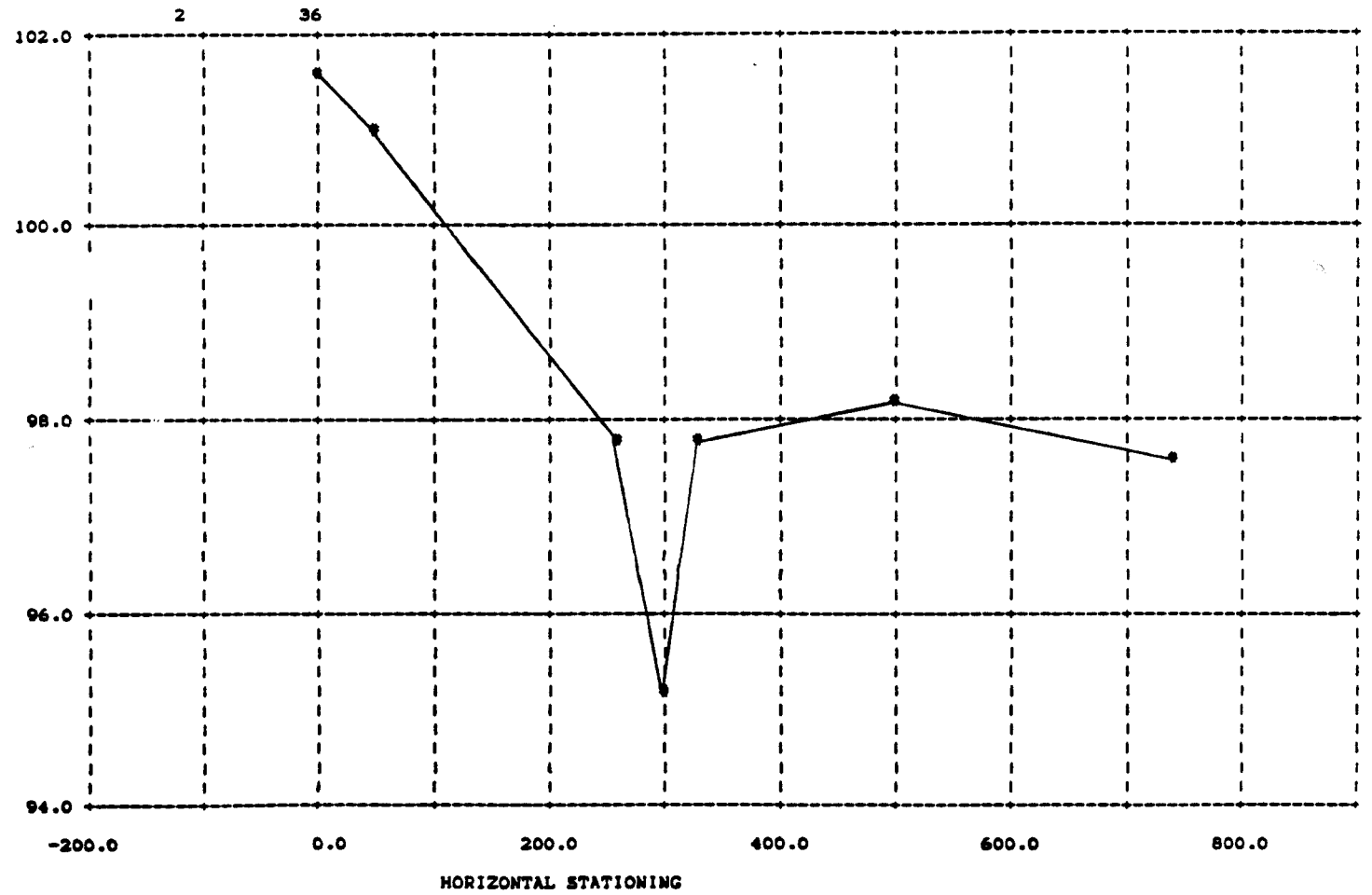

PX 5

Unnamed arroyo - Melrose Air Force Range

--- CROSS SECTION OUTLINE PLOT --- SEQ-NOB = 4 SEC-REF-DIST = 2280.0 SECID = '5

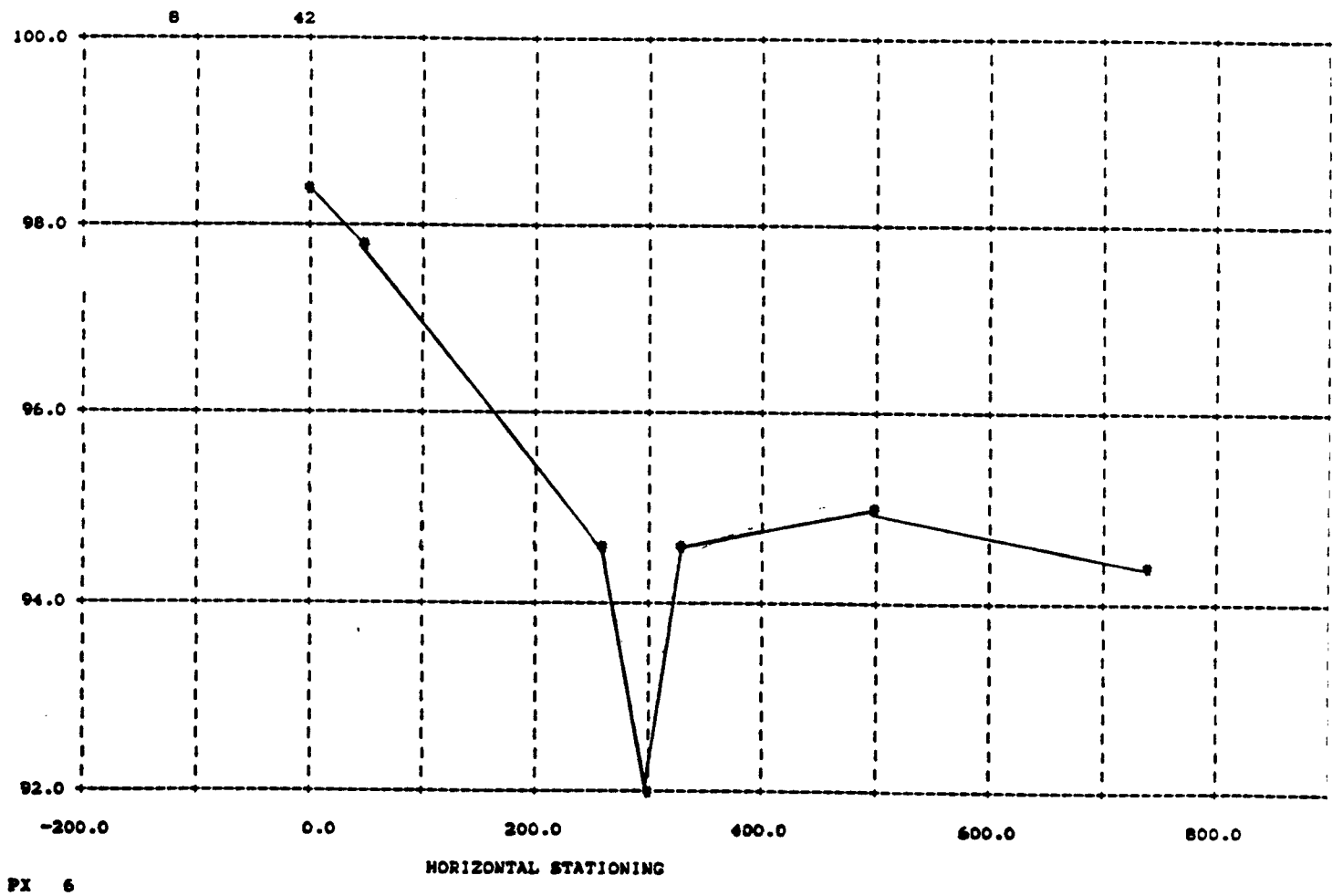

PX 6

unnamed arroyo - Melrose Air Force Range

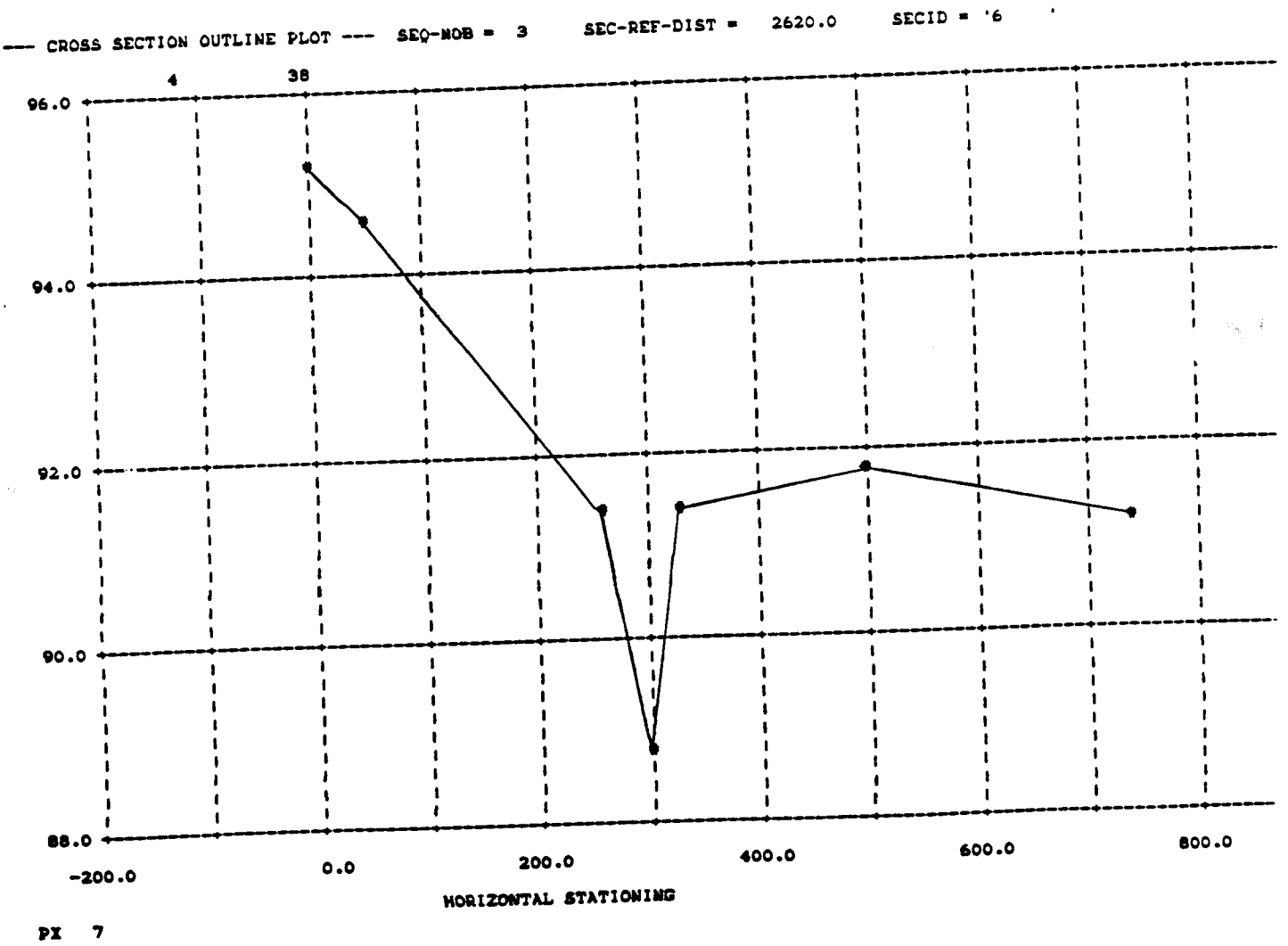

Unnamed arroyo – Melrose Air Force Range

--- CROSS SECTION OUTLINE PLOT --- SEQ-NOB = 2 SEC-REF-DIST = 2960.0 SECID = '7

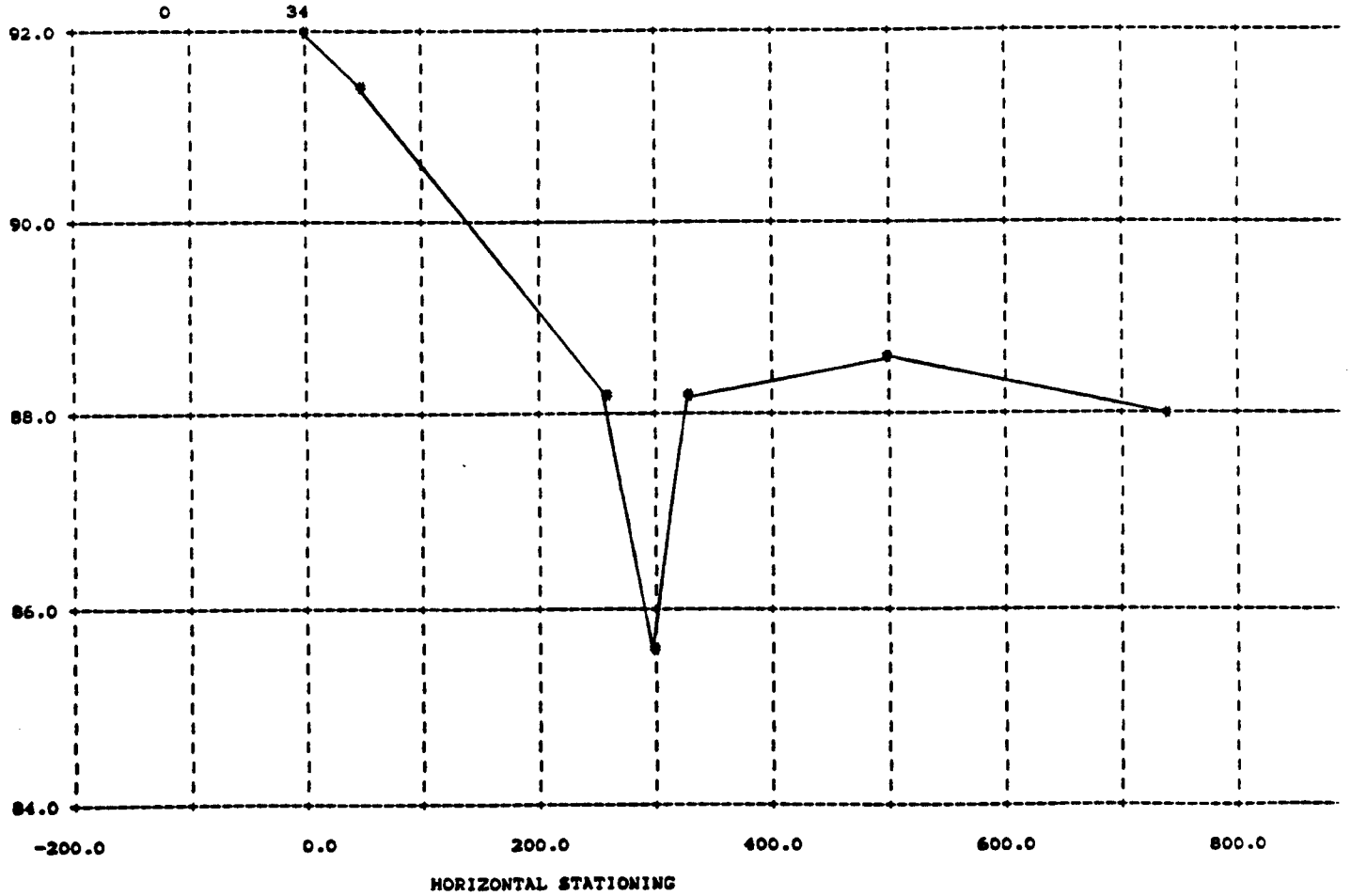

PX 8

```
WSPRO          FEDERAL HIGHWAY ADMINISTRATION - U. S. GEOLOGICAL SURVEY
V060188            MODEL  FOR  WATER-SURFACE  PROFILE  COMPUTATIONS

        UNNAMED ARROYO (MELROSE BOMBING RANGE)
           *** RUN DATE & TIME: 01-29-93  13:03

 ===015 WSI IN WRONG FLOW REGIME AT SECID "1     ":  USED WSI = CRWS.
                                WSI,CRWS =   105.81      105.25

 XSID:CODE   SRDL    LEW      AREA   VHD    HF      EGL     CRWS       Q     WSEL
       SRD   FLEN    REW         K  ALPH    HO      ERR      FR#     VEL

1     :XS   ******   528.      749.  0.97 *****  106.23   105.25    5550.  105.25
      485. ******  1650.    88764.  1.14 ***** *******     1.19     7.41

 ===110 WSEL NOT FOUND AT SECID "2     ":  REDUCED DELTAY.
                    WSLIM1,WSLIM2,DELTAY =   102.98       99.10    -0.02

 ===130 CRITICAL WATER-SURFACE ELEVATION  A _ S _ S _ U _ M _ E _ D  !!!!!
              ENERGY EQUATION  N_O_T  B_A_L_A_N_C_E_D  AT SECID "2     "
                    WSBEG,WSEND,CRWS =   102.98       99.10     102.98

2     :XS     605.   326.      692.  1.00 *****  103.99   102.98    5550.  102.98
     1090.    605.   657.    76647.  1.00 ***** *******     0.98     8.02

 ===110 WSEL NOT FOUND AT SECID "3     ":  REDUCED DELTAY.
                    WSLIM1,WSLIM2,DELTAY =   101.68       98.60    -0.02

 ===130 CRITICAL WATER-SURFACE ELEVATION  A _ S _ S _ U _ M _ E _ D  !!!!!
              ENERGY EQUATION  N_O_T  B_A_L_A_N_C_E_D  AT SECID "3     "
                    WSBEG,WSEND,CRWS =   101.68       98.60     101.68

3     :XS     510.   293.      840.  0.68 *****  102.36   101.68    5550.  101.68
     1600.    510.   890.    71450.  1.00 ***** *******     0.98     6.61

 ===140 AT SECID "4     ":  END OF CROSS SECTION EXTENDED VERTICALLY.
                                WSEL,YLT,YRT =    99.26      101.60      97.60

4     :XS     340.   172.      777.  0.79  2.27  100.05    99.31    5550.   99.26
     1940.    340.   743.    64482.  1.00  0.00    0.03     1.08     7.14

 ===140 AT SECID "5     ":  END OF CROSS SECTION EXTENDED VERTICALLY.
                                WSEL,YLT,YRT =    95.88       98.40      94.40

5     :XS     340.   184.      677.  1.04  3.12   96.93    96.11    5550.   95.88
     2280.    340.   743.    52023.  1.00  0.00    0.00     1.31     8.19

 ===140 AT SECID "6     ":  END OF CROSS SECTION EXTENDED VERTICALLY.
                                WSEL,YLT,YRT =    92.86       95.20      91.20

6     :XS     340.   172.      777.  0.79  3.12   93.65    92.91    5550.   92.86
     2620.    340.   743.    64482.  1.00  0.13    0.03     1.08     7.14

 ===140 AT SECID "7     ":  END OF CROSS SECTION EXTENDED VERTICALLY.
                                WSEL,YLT,YRT =    89.48       92.00      88.00

7     :XS     340.   184.      677.  1.04  3.12   90.53    89.71    5550.   89.48
     2960.    340.   743.    52023.  1.00  0.00    0.00     1.31     8.19

 ===140 AT SECID "8     ":  END OF CROSS SECTION EXTENDED VERTICALLY.
                                WSEL,YLT,YRT =    86.46       88.80      84.80
```

WSPRO FEDERAL HIGHWAY ADMINISTRATION - U. S. GEOLOGICAL SURVEY
V060188 MODEL FOR WATER-SURFACE PROFILE COMPUTATIONS

UNNAMED ARROYO (MELROSE BOMBING RANGE)
*** RUN DATE & TIME: 01-29-93 13:03
FIRST USER DEFINED TABLE.

XSID	:CODE	WSEL	YMIN	SKEW	SRD	K	AREA	Q	XSTW	XSWP	LEW	REW	FR#	CRWS
8	:XS	86.46	82.40	0.	3300.	64482.	777.	5550.	571.	573.	172.	743.	1.08	86.51
7	:XS	89.48	85.60	0.	2960.	52023.	677.	5550.	559.	561.	184.	743.	1.31	89.71
6	:XS	92.86	88.80	0.	2620.	64482.	777.	5550.	571.	573.	172.	743.	1.08	92.91
5	:XS	95.88	92.00	0.	2280.	52023.	677.	5550.	559.	561.	184.	743.	1.31	96.11
4	:XS	99.26	95.20	0.	1940.	64482.	777.	5550.	571.	573.	172.	743.	1.08	99.31
3	:XS	101.68	98.40	0.	1600.	71450.	840.	5550.	597.	597.	293.	890.	0.98	101.68
2	:XS	102.98	98.90	0.	1090.	76647.	692.	5550.	331.	331.	326.	657.	0.98	102.98
1	:XS	105.25	99.90	0.	485.	88764.	749.	5550.	549.	549.	528.	1650.	1.19	105.25

ER

9-230

UNITED STATES
DEPARTMENT OF THE INTERIOR
GEOLOGICAL SURVEY

File No. { Washington ..... District .....

Unnamed Arroyo – Melrose Air Force Range

Section 1 STA	Section 1 ELEV		Section 2 STA	Section 2 ELEV		Section 3 STA	Section 3 ELEV		Section 4 STA	Section 4 ELEV	
0	110.6		0	106.4		0	105.4		0	101.6	
243	109.2		67	105.7		230	102.1		50	101.1	
448	106.5		257	104.1		380	101.1		262	97.9	
536	105.1		387	102.0		556	99.7		296	95.2	←
613	95.5	←	482	98.9	←	672	99.5		334	97.8	
673	101.8		552	99.8		723	98.4	←	503	98.3	
864	107.3		690	124.0		821	101.1		743	97.6	
1036	107.0		803	103.9		975	102.4				
1252	105.7		1009	103.4		1084	102.3				
1482	104.8					1347	100.3				

Section 5 STA	Section 5 ELEV		Section 6 STA	Section 6 ELEV		Station 7 STA	Station 7 ELEV		Section 8 STA	Section 8 ELEV	
0	83.4		0	90.7		0	79.6		0	77.6	
442	87.3		142	89.9		175	79.3		230	70.4	
927	89.6		316	88.2		262	79.4		488	69.2	
1199	91.6		324	87.0	←	411	77.4		686	68.2	
1312	101.6		332	88.3		567	78.9		848	67.7	
1444	92.6		355	88.4		745	79.2		1031	67.9	
1549	92.5	←	500	88.8		816	79.0		1134	68.6	
1672	92.6					830	77.8	←	1304	68.2	
1653	91.3					842	79.0		1491	67.8	
1788	92.9					1158	79.1		1710	68.3	
2692	93.3		Y min	FALL	SRD	1544	78.7		1907	67.8	
		1	99.9	0	485	1801	78.0		2115	67.6	←
		2	98.9	1.0	1090				2357	68.0	
		3	98.4	0.5	1600				2599	66.8	
		4	95.2	3.2	1940				2804	67.0	
		5	92.5	2.7	3090				2986	66.9	
		6	87.0	5.5	3540						
		7	77.8	9.2	4210						
		8	67.6	10.2	5430						

U.S. GOVERNMENT PRINTING OFFICE : 1965—O-763-750 857-606

BLM FIELD NOTES FOR INDIRECT DISCHARGE MEASUREMENT

Site: Unnamed Arroyo - Melrose Air Force Range

Flood date: _____

Survey Party: Phillips & Waltemeyer II Survey Date: 1-25-93

Instrument no.: _____ Date of two peg test: _____

Weather: _____

Hub 1 @ _____

Elevation of Hub: 92.18

Measure-up: 4.70

HI = 96.88

HI computation

100	+	8.30-5.18	+	_____	=	96.88
_____	+	_____	+	_____	=	_____
_____	+	_____	+	_____	=	_____

low rod = 5.18 high rod = 8.83

Station	Azimuth Degree	Min	Sec	Distance (at hub 1)	Rod	Elev	Remarks
RP1	190	02	55	1592	+8.30	100.00	-assumed
hub2	246	46	45	644	+6.73	98.43	
	A Section						section parallel rod with towers
L.00	351	42	40	1625	-8.27	83.43	
442	350	58	50	1183	-4.44	87.26	
485	350	53	00	698	-2.06	89.64	
272	350	14	25	426	-.09	91.61	
113	349	26	35	314	+.49	101.57	
132	348	11	45	182	+.91	92.61	
105	347	13	40	77	+.79	92.49	
73	346	32	25	55	+.95	92.65	
31	343	08	45	23	-.33	91.31	
135	160	28	55	111	+1.24	92.94	
904	167	24	10	1014	+1.60	93.30	
R							
	B Section						Proceeding downstream
R 0	58	14	00	452	-2.87	88.83	
145	39	29	55	426	-3.32	88.38	
23	36	38	45	418	-3.44	88.26	
8	35	30	40	420	-4.68	87.02	
8	34	26	00	419	-3.47	88.23	
174	10	56	10	434	-1.71	89.99	
L 142	354	15	15	485	-1.00	90.70	
	C SECTION						
L	18	21	55	1407	-12.11	79.59	
175	75	24	45	1370	-12.39	79.31	
87	29	02	00	1361	-12.35	79.35	

Sheet 1 of ___ sheets computed: SDW checked: _____ rpt88NM

EDM FIELD NOTES FOR INDIRECT DISCHARGE MEASUREMENT

Site: Unnamed Arroyo - Melrose Air Force Range

Flood date: _____

Survey Party: _____ Survey Date: 1-25-93

Instrument no.: _____ Date of two peg test: _____

Weather: _____

Hub 3 @ _____

Elevation of Hub: _____

Measure-up: ③ 5.02

HI = 96.88

HI computation

_____ + _____ + _____ - _____

_____ + _____ + _____ - _____

_____ + _____ + _____ - _____

low rod = _____ high rod = _____

	Station	Azimuth Degree	Min	Sec	Distance	Rod	Elev	Remarks
	149	29	39	00	1360	-14.33	77.37	
	156	30	18	50	1358	-12.77	78.93	
	178	37	50	25	1332	-12.49	79.21	
	71	40	30	55	1341	-12.65	79.05	
	14	41	26	25	1342	-13.93	77.77	
	12	41	36	55	1343	-12.69	79.01	
	316	55	14	15	1375	-12.60	79.10	
	386	65	33	00	1516	-13.04	78.66	
R	257	77	41	20	1642	-13.65	78.05	
	⊡3	44	13	55	1501	-13.21	78.49	10' NE of Fence outside range
		7 @ ⊡3			HI = 83.56			HI = 92.18 + (-8.54) = 83.64
								HI = 78.49 + 5.02 = 83.51
	⊡1	224	13	55	1501	+13.72	92.10	
		D SECTION						
	L 0	330	33	05	1411	-3.82	72.56	
	230	339	48	20	1354	-7.94	70.44	
	258	349	40	20	1220	-9.14	69.24	
	198	358	13	10	1127	-10.19	68.19	
	162	6	12	30	1074	-10.68	67.70	
	183	15	39	50	1012	-10.50	67.88	
	103	21	19	25	980	-9.26	68.62	
	170	31	17	50	970	-10.16	68.22	
	187	42	16	30	990	-10.52	67.86	
	219	54	07	45	1051	-10.11	68.27	
	197	63	22	30	1139	-10.57	67.81	
	208	71	21	00	1263	-10.81	67.57	
	242	79	46	00	1406	-10.36	68.02	
	242	86	09	00	1583	-11.55	66.79	

Sheet 2 of ____ sheets computed: SDW checked: _____ rpt88NM

EDM FIELD NOTES FOR INDIRECT DISCHARGE MEASUREMENT

Site: Unnamed Arroyo - Melrose Air Force Range
Flood date: _____

Survey Party: _____ Survey Date: 1-25-26-93
Instrument no.: _____ Date of two peg test: _____
Weather: _____

Hub ___ @ _____
Elevation of Hub: _____
Measure-up: _____

From page 2
HI = 83.56

HI computation

100.00	+ 3.86 +5.18	+	=	109.04
	+	+	=	
	+	+	=	

low rod = 5.18 high rod = 8.83

Station	Azimuth Degree	Min	Sec	Distance	Rod	Elev	Remarks
205	90	11	05	1751	-11.33	67.05	
182	83	29	40	1898	-11.51	66.87	
R O							
⊡ 4	17	30	45	1486	-14.01	64.37	
	01-26-93				① HI	109.04	
RP 1	84	28	30	744	-9.86	100.00	Given
⊡ 2	19	04	35	1479	-5.45	98.41	by yellow truck
	E SECTION						
L O	272	42	00	1390	+6.74	110.60	
243	273	17	40	1167	+5.38	109.24	
205	268	45	10	980	+3.00	106.86	
88	266	50	00	898	+1.24	105.10	
77	264	13	05	831	-.32	99.89	
60	264	05	30	771	+1.63	101.84	
191	256	02	20	606	+3.47	107.33	Norm L
172	244	09	20	475	+3.13	106.99	
216	223	42	55	307	+1.85	105.71	
230	175	23	00	216	+0.94	104.80	
R							
	F SECTION						
R O	26	21	05	33	-0.42	103.44	
206	319	20	40	217	+.06	103.92	
113	319	03	15	330	+.18	104.04	
138	315	57	00	466	-4.04	99.82	
70	315	24	30	536	-4.92	98.94	
95	315	45	35	631	-1.82	102.04	
130	316	02	35	760	~~+0.28~~ +0.28	104.14	

Sheet 3 of ___ sheets computed: SDW checked: _____ rpt88NM

EDM FIELD NOTES FOR INDIRECT DISCHARGE MEASUREMENT

Site: Unnamed arroyo - Melrose Air Force Range
Flood date:

Survey Party: Survey Date: 1-26-93
Instrument no.: Date of two peg test:
Weather:

Hub @
Elevation of Hub:
Measure-up:

HI computation

	+		+		-	
	+		+		-	
	+		+		-	

HI = 109.04

low rod = 5.18 high rod = 8.83 41

Station	Azimuth Degree	Min	Sec	Distance	Rod	Elev	Remarks
190	315	15	30	950	+1.87	105.73	
67	315	19	45	1017	+2.52	106.38	
L							
		G	SECTION				
LO	342	01	05	1266	+1.54	105.40	
230	346	58	55	1059	-1.72	102.14	
150	348	16	05	910	-2.72	101.14	
176	350	47	30	739	-4.15	99.71	
116	353	01	30	626	-4.35	99.51	
51	353	44	35	575	-5.50	98.36	
98	356	46	40	482	-2.76	101.10	
154	11	25	15	371	-1.51	102.35	
109	28	22	20	342	-1.53	102.33	
R 263	56	56	55	506	-3.60	100.26	
		H	SECTION				
RO	32	38	55	912	-6.31	97.55	
240	18	23	25	970	-5.55	98.31	
169	9	21	20	1037	-6.00	97.86	
38	7	51	00	1058	-8.69	95.17	
34	6	36	00	1083	-5.94	97.92	
212	358	59	10	1230	-2.74	101.12	
LO 50	357	29	10	1267	-2.21	101.65	
P.t NW	200	35	40	10	-.03	103.83	
P.t 700	174	20	20	709	+1.07	104.93	
P.t 749	127	42	45	1030	-5.05	98.81	
RP1 706	84	28	30	743	-3.91	99.95	

Sheet 4 of sheets computed: SDW checked: rpt88NM

UNITED STATES DEPARTMENT OF THE INTERIOR
GEOLOGICAL SURVEY
WATER RESOURCES DIVISION

File .....

UNNAMED ARROYO (MELROSE BOMBING RANGE)

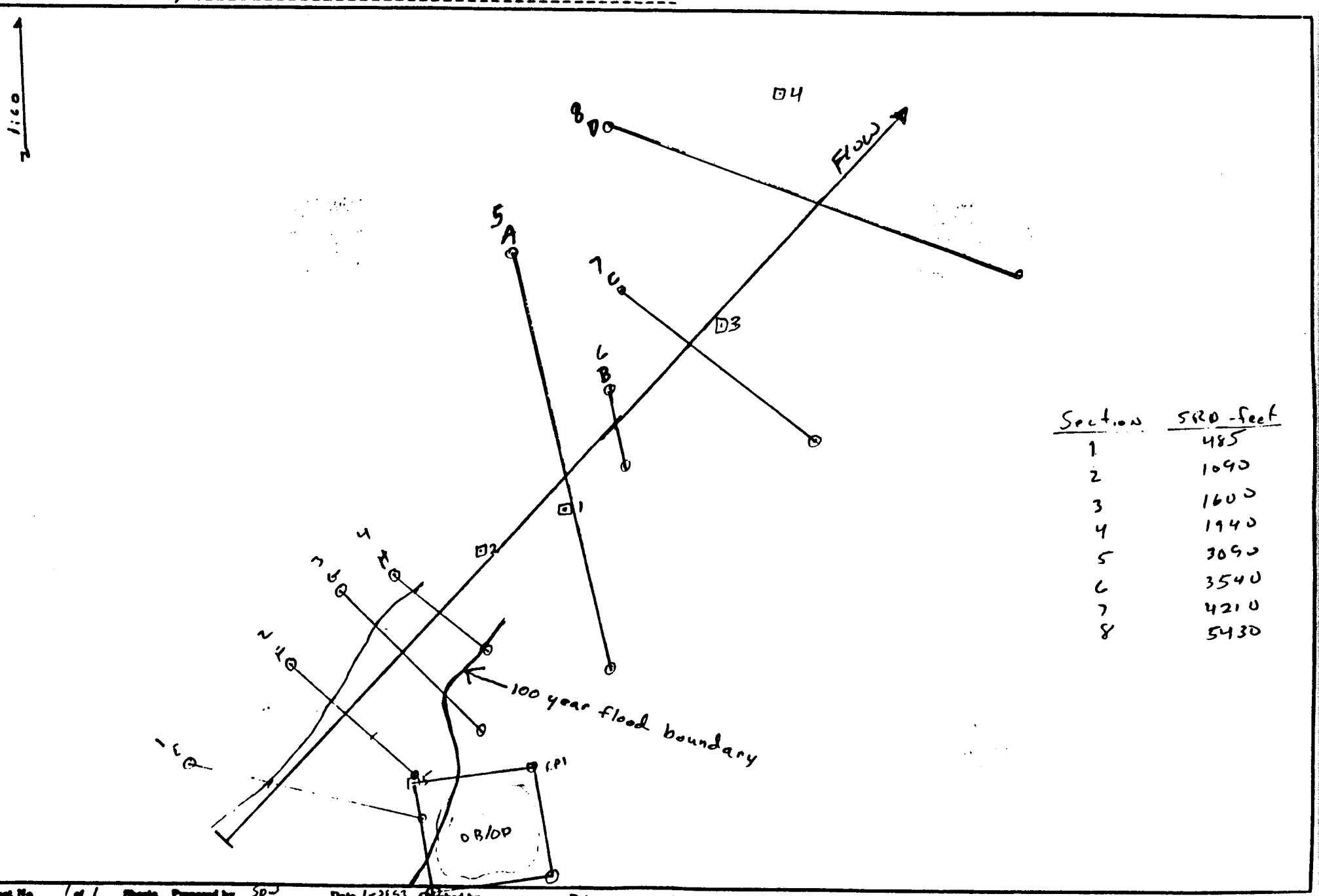

Section	SRD - feet
1	485
2	1090
3	1600
4	1940
5	3090
6	3540
7	4210
8	5430

Sheet No. 1 of 1 Sheets Prepared by SPJ Date 1-21-53 Checked by ..... Date .....

FOLD

GPO : 1978 O - 270-903

Map showing unnamed Arroyo on Melrose Air Force Range

APPENDIX B1-2
100-YEAR FLOODPLAIN MAP, OD AREA, MELROSE AFR

APPENDIX C
WASTE CHARACTERISTICS

APPENDIX C1-1
WASTE MUNITIONS CARTRIDGE COMPONENTS AND COMBUSTION PRODUCTS

Table C1-1 Waste Munitions
Cartridge Components and Combustion Products

WASTE MUNITION	COMPONENTS				PROPELLENT COMBUSTION PRODUCTS		PRIMER COMBUSTION PRODUCTS (all cartridges)	
	Propellants	Percent Composition	Primers/Igniters	Percent Composition	Ingredient	Mol/Kg	Ingredient	Mol/Kg
.38 Cal. M41 Special Ball	*Double-based, flake*		*Percussion*		-Carbon monoxide	10.17	-Antimony sulfide	0.23
					-Carbon dioxide	4.74	-Barium hydroxide	0.06
	-N in Nitrocellulose	12.6% to 13.3%	-Lead styphnate	38%	-Hydrogen	2.07	-Barium peroxide	0.39
	-Nitroglycerin	36% to 42%	-Tetracene	2%	-Nitrogen	5.05	-Carbon monoxide	2.44
	-Ethyl centralite	1.5%	-Barium nitrate	44%	-Potassium hydroxide	0.07	-Carbon dioxide	5.77
	-Graphite	0.75%	-Antimony sulfide	12%			-Lead	0.05
	-Nitrocellulose	Remainder	-Aluminum powder	4%	-Water	16.03	-Lead monoxide	0.25
							-Nitrogen	8.81
							-Sulfur dioxide	1.37
.38 Cal. Wadcutter	*Double-based, flake*		*Percussion*		-Carbon monoxide	1.49	-Water	6.08
					-Carbon dioxide	6.11		
	-Nitroglycerin	38% to 42%	-Lead styphnate	38%	-Hydrogen	3.91		
	-Potassium sulfate	1%	-Tetracene	2%	-Nitrogen	5.77		
	-Ethyl centralite	1%	-Barium Nitrate	44%	-Potassium hydroxide	0.05		
	-Nitrocellulose	56% to 60%	-Antimony sulfide	12%		18.53		
			-Aluminum powder	4%	-Water			
ARD 446-1/863-1 Impulse Cartridge	*Double-based, smokeless*		*Percussion*		*Solid Products of Combustion:*			
			-Nitrocellulose	56%	-Lead oxide			
	-Nitrocellulose	71.3%	-Nitroglycerin	39.5%	-Barium oxide			
	-Nitroglycerin	20%	-Dinitrotoluene	0.35%	-Antimony oxide			
	-Ethyl centralite	6.5%	-Graphite	1%	-Aluminum oxide			
	-Barium nitrate	1%	-Diphenylamine	1%	-Potassium oxide			
	-Potassium nitrate	0.7%	-Sodium sulfate	0.1%	-Sulfur oxide			
	-Graphite	0.1%	-Dibutylphthalate	0.4%				
	-Ash	0.1% to 0.2%	-Ash	0.25-0.5%				
	-Water	0.25%	-Ammonium carbonate	0.3-0.4%				
			-Residual solubles	0.3%				
			-Water	0.5%				

WASTE MUNITION	COMPONENTS				PROPELLENT COMBUSTION PRODUCTS		PRIMER COMBUSTION PRODUCTS (all cartridges)	
	Propellants	Percent Composition	Primers/Igniters	Percent Composition	Ingredient	Mol/Kg	Ingredient	Mol/Kg
40 mm Cartridge	-Nitrocellulose -Nitroglycerin -Nitroguanidine -Ethyl centralite -Potassium nitrate -Potassium sulfate -Diphenylamine -Dinitrotoluene -Dibutylphthalate -Cryolite -Total volatiles -Graphite	22% to 90% 19% to 40% 54.7% 0.75% to 6% 1.5% 1% 1% 8% 2% 0.3% 0.3% to 3.2% 0.15% to 0.4%	NA		NA		NA	

NA - Information not available

APPENDIX C1-2
CHEMICAL COMPONENTS AND COMBUSTION PRODUCTS OF SMOKE AND ILLUMINATION SIGNAL

Table C1-2. Chemical components and combustion products of smoke and illumination signals

COMPONENTS					
First Fire Composition	Scratch Mixture	Prime Mixture	Smoke Igniter	Flare Composition	Smoke Composition
-Potassium nitrate, 49% -Antimony sulfide, 20% -Sulfur, 12% -Black powder, 16% -Dextrin, 3%	-Red phosphorus, 54% -Varnish, 38% -Petroleum Spirits, 8%	-Black powder, 98.5% -Binder, cellulose nitrate-camphor, 0.06% -Amyl acetate, 1.44%	-Cupric oxide, 20.8% -Silicon, 20.8% -Lead dioxide, 20.9% -Binder, cellulose nitrate-camphor, 1.5% -Amyl acetate, 36%	-Potassium perchlorate, 15% -Strontium nitrate, 45% -Magnesium, 20.4% -Hexachlorobenzene, 12% -Asphaltum, 7% -Castor oil, 0.3% -Linseed oil, 0.3%	-Dye mixture (solvent orange, disperse red), 60.19% -Sugar, 14.56% -Potassium chlorate, 18.93% -Graphite, 1,46% -Diatomateous Earth, 4.86%
PROBABLE COMBUSTION PRODUCTS OR RESIDUES					
-Carbon monoxide -Carbon dioxide -Carbonyl sulfide -Hydrogen -Water -Hydrogen sulfide -Potassium sulfide -Potassium sulfate -Potassium hydroxide -Nitrogen -Nitric oxide -Sulfur dimer -Disulfur monoxide -Antimony trioxide -Antimony pentoxide -Sulfur monohydride -Sulfur monoxide -Sulfur dioxide -Sulfur trioxide	-Carbon -Carbon dioxide -Carbon monoxide -Methane -Hydrogen -Phosphorus Nitride -Phosphorus trioxide	-Carbon -Carbon dioxide -Carbon monoxide -Carbon disulfide -Water -Hydrogen sulfide -Potassium carbonate -Potassium sulfate -Nitrogen -Sulfur	-Copper -Hydrogen -Lead -Silicon -Silicon nitride -Silicon carbide -Silicon dioxide	-Carbon -Methane -Carbon monoxide -Carbon dioxide -Hydrogen -Water -Hydrogen chloride -Hydrogen cyanide -Potassium -Potassium chloride -Magnesium oxide -Nitrogen -Ammonia -Nitric oxide -Strontium chloride -Strontium oxide	-1,1-Biphenyl -1,2-Propadienylbenzene -1,3-Dimethylbenzene -1-(1,1-Dimethylethyl)- naphthalene -1-Aminoanthraquinone -1-Aminonaphthalene -1-Cyanonaphthalene -1-Hexynylbenzene -1-Isocyanonaphthalene -1-Methylaminoanthraquinone -1-Methylaminobiphenylene -1-Methylnaphthalene -1-phenyl-1-butyne -1-Phenylnaphthalene -1H-indene -1H-indene, 1-methylene -2-Amino-9H-fluorene -2-Aminoanthraquinone -2-Methylisocyanobenzene -2-Methylnaphthalene -2-Phenyloxazole -3-Phenyl-2-propenal -4-Hydroxybenzonitrile -4-Methyl-1,1-biphenyl

PROBABLE COMBUSTION PRODUCTS OR RESIDUES					
First Fire Composition	Scratch Mixture	Prime Mixture	Smoke Igniter	Flare Composition	Smoke Composition
					-9H-Fluorene -Acetophenone -Alpha-phenylaminobenzeneacetonitrile -Amino-1,1-biphenyls -Amino-beta-naphthol -Anisole -Anthracene -Anthraquinone -Benzaldehyde -Benzofuran -Benzonitrile, N-oxide -Biphenylene -C10-alkene -C13-alkanes -Carbon dioxide -Carbon monoxide -Cyanobenzene -Dibenzofuran -Diethylphthalate -Hydrogen chloride -Hydrogen cyanide -Isoquinone -Methylphenyldiazene-1-oxide -N,N-diethylbenzeneamine -Naphthol (2,1-b) furan -Nitrogen oxides -Phenol -Phenylacetylene -Phenylhydrazine -Styrene -Toluene -Xylene-azo-beta-naphthol

APPENDIX C1-3
MISCELLANEOUS EXPLOSIVE MATERIALS

Table C1-3

Miscellaneous Explosive Materials

Ordnance	Components/Constituents
Proximity fuse	Detonator: Lead azide/PETN Primer: Grade N Impulse cartridge: 50% LMNR 50% Black powder
Signal cartridge	Primer: Commercial shotgun shell primer • 2 gm smokeless powder • 20 to 25 cc titanium tetrachloride • Red phosphorus
Engine starter cartridge	Propellant: Ammonium nitrate oxidizer and rubber-based binder Igniter: Two electric matches (M100 Atlas squibs) and black powder Booster: Ammonium perchlorate and boron potassium
Flare	Magnesium powder Polytetrafluorethylene Binder
Water gel (Iremite 60)	Ammonium nitrate solution Calcium nitrate Sodium nitrate Ethylene glycol Water Aluminum Charcoal Polysaccharide thickener
Detonating cord (DIPAM)	100 mg hexanitrostilbene 2.5 grains diaminohexanitrobiphenyl

APPENDIX C1-4
SAMPLING AND ANALYSIS PLAN FOR THE MELROSE AFR OD AREA

Replaced w/ Field SAP

Sampling and Analysis Plan for the OD Unit Melrose Air Force Range, New Mexico

September 1993

Prepared for
Cannon Air Force Base
New Mexico

Prepared by
Radian Corporation
120 South Jefferson Circle
Oak Ridge, Tennessee 37830
Doc. #F930618.1JY51

Sampling and Analysis Plan for the OD Unit
Melrose Air Force Range, New Mexico

September 1993

Submitted to
Cannon Air Force Base
New Mexico

Prepared by
Radian Corporation
120 South Jefferson Circle
Oak Ridge, Tennessee 37830
Doc. #F930618.1JY51

CONTENTS

	PAGE
TABLES	iv
FIGURES	iv
ACRONYMS AND INITIALISMS	v
1. INTRODUCTION	1
2. SITE DESCRIPTION	2
3. SAMPLING APPROACH AND RATIONALE	2
3.1 SAMPLE COLLECTION	2
3.2 ANALYSIS	2
3.3 RATIONALE	3
4. SAMPLING PROCEDURES AND METHODOLOGY	5
4.1 SAMPLING FREQUENCY	5
4.2 SAMPLE LOCATION	5
4.3 QC SAMPLES	5
4.4 SAMPLING PROCEDURES	7
4.5 CONTAMINATION CONTROL	8
4.6 HEALTH AND SAFETY PROCEDURES	9
5. SAMPLING HANDLING AND CHAIN OF CUSTODY	9
5.1 SAMPLE CONTAINER AND PRESERVATION REQUIREMENTS	9
5.2 PACKAGING AND TRANSPORTATION	11
6. DOCUMENTATION OF ACTIVITIES	11
6.1 SAMPLE CODING	11
6.2 SAMPLE IDENTIFICATION	12
6.3 FIELD LOGBOOKS	12
7. LABORATORY ANALYSIS	13
7.1 LABORATORY	13
7.2 QA/QC	13
7.3 SAMPLING DQOs	14
7.3.1 Precision	14
7.3.2 Accuracy	14
7.3.3 Representativeness	15
7.3.4 Completeness	15
7.3.5 Comparability	16
7.4 SAMPLE RETURN OR DISPOSAL	16
8. STATISTICAL ANALYSIS	16

CONTENTS

PAGE

9. DATA RESOLUTION 19

10. REFERENCES 21

TABLES

1. Test methods for soils 4
2. Summary of sample container, preservative, and holding time requirements 11
3. Standard T-Tables 0.05 Level of Significance 18
4. RCRA Proposed Subpart S Media Action Levels 20

FIGURES

1. Sampling Zones, EOD Area, Melrose AFR 6
2. Typical chain-of-custody form 10

ACRONYMS AND INITIALISMS

AFB	Air Force Base
AFR	Air Force Range
ASTM	American Society for Testing Methods
CLP	Contract Laboratory Program
COC	Chain-of-Custody
DQOs	Daily Quality Objectives
EOD	Explosive Ordnance Disposal
NMHWMR	New Mexico Hazardous Waste Management Regulations
OD	Open Detonation
PARCC	Precision, Accuracy, Representativeness, Completeness, and Comparability
QA	Quality Assurance
RCRA	Resource Conservation and Recovery Act
RPD	Relative Percent Difference

1. INTRODUCTION

This sampling and analysis plan (SAP) has been prepared to support the Resource Conservation and Recovery Act (RCRA) Subpart X Permit Application for the Melrose Air Force Range (AFR), an ancillary part of Cannon Air Force Base (AFB), New Mexico. This SAP provides guidance for the required routine environmental sampling at the open detonation (OD) unit at Melrose AFR. Environmental sampling is necessary to demonstrate that the OD unit is operating in a manner where residual waste constituents are not contaminating soils above RCRA action levels. The plan provides procedures to routinely test the soils at the OD unit to demonstrate the effectiveness of the treatment process and whether any contamination has imported ambient soils.

The plan ensures that sufficient samples are taken to draw statistical conclusions and to statistically demonstrate the migration potential of all waste constituents. The plan explains the rationale for how and why samples are collected and explains the spatial relationships for sample collection. The design of the plan is based upon United States Air Force (USAF) OD operational procedures, knowledge of the waste munitions' characteristics, and the environmental conditions at Melrose AFR. Where applicable, the procedures and quality assurance/quality control (QA/QC) techniques in EPA's November 1986 *Test Methods for Evaluating Solid Waste* have been used to prepare this SAP.

Specific sections covered in this plan include: Site Description; Sampling Locations; Sampling Frequency; Number of Samples; Sampling Procedures; Sample Collection and Holding Time; Analysis Parameters and Methods; Sample Documentation; Health and Safety Procedures; Laboratory Procedures; and QA/QC.

2. SITE DESCRIPTION

The OD unit is within the boundaries of Melrose AFR in Roosevelt County, New Mexico, approximately 25 miles southwest of Cannon AFB. The location of Melrose AFR and the exact location of the OD unit are shown in Figs. B-2 and B-3 of Sect. B in the permit application. The OD area within which the OD unit is located generally consists of a 700-ft cleared, circular area that is void of vegetation and debris, and is encircled by an earthen berm. A detailed description of the OD unit is presented in Sect. B of the permit application. The environmental conditions, including geology, hydrogeology, topographic and drainage features, and climate at the Melrose AFR are also described in Sect. B of the permit application. The OD unit is operated in accordance with Cannon AFB Regulation 136-18, USAF Regulation Technical Orders 11A-1-42, 60A-1-1-31, Maintenance Operation Instructions 136-6, and USAF Regulation 127-100 (Appendix C). A detailed description of the unit's operation can be found in Sect. D of the permit application.

3. SAMPLING APPROACH AND RATIONALE

3.1 SAMPLE COLLECTION

A sufficient number of samples must be collected and analyzed to draw statistical conclusions and to demonstrate the migration potential of all hazardous waste constituents from the OD unit. It is estimated that only three discrete samples from the OD area will be sufficient (see Attachment A). This is based on historical data and the EPA SW-846 method for determining the appropriate number of samples to be collected. The historical background data consists of 20 samples and the analytical results of these samples varied only slightly (Appendix E); therefore, only a minimum of three samples are needed to accurately represent the effectiveness of treatment operations of the OD unit. However, if additional samples need to be collected due to the nature of a particular detonation episode, then appropiate sampling locations will be identified and used. Sampling methodology and sample location is discussed in greater detail in Sect. 4 of this plan.

3.2 ANALYSIS

This section summarizes the analytical procedures to be followed for proper site characterization. Soil samples will be analyzed for all elemental metals, including priority pollutant metals, listed in the New Mexico Hazardous Waste Management Regulations-7 (NMHWMR-7), Part

V, Appendix IX and for explosive residues. All analytes as referenced above, along with their EPA SW-846 test methods, are listed in Table 1.

Analytical requirements are discussed further in Sect. 7.

3.3 RATIONALE

Melrose AFR has never been utilized for the research and development of nuclear, chemical warfare, or other exotic warfare types of weapons. The only munitions delivered or disposed of at Melrose AFR have been conventional live and training munitions. Therefore, the emphasis of the sampling and analysis should be to search only for those constituents present in these wastes. This philosophy supports utilizing the analytical methods described in Table 1. Any further investigations should be addressed during closure of the unit, and only if appropiate at that time.

Table 1. Test methods for soils

Parameter/Constituent	EPA hazardous waste number	Test method	Reference
Explosive Compounds	D003	Method 8330	*Test Methods for Evaluating Solid Waste, Physical and Chemical Methods*, EPA SW-846, 3rd Ed. November 1986 (amended)
HMX			
RDX			
TNB			
DNB			
Tetryl			
NB			
TNT			
24DNT			
26DNT			
2NT			
3NT			
4NT			
Elemental Metals[a]			*Test Methods for Evaluating Solid Waste, Physical and Chemical Methods*, EPA SW-846, 3rd Ed. November 1986 (amended)
Antimony	–	6010	
Arsenic	D004	6010	
Barium	-	6010	
Beryllium	–	6010	
Cadmium	D006	6010	
Chromium	D007	6010	
Cobalt	-	6010	
Copper	–	6010	
Lead	D008	6010	
Mercury	D009	7471	
Nickel	–	6010	
Selenium	D010	6010	
Silver	D011	6010	
Thallium	–	6010	
Vanadium	-	6010	
Zinc	–	6010	

[a]Elemental metals listed in NMHWMR-7, Part V, Section 264, Appendix IX

4. SAMPLING PROCEDURES AND METHODOLOGY

4.1 SAMPLING FREQUENCY

Soil sampling will occur annually, immediately following (i.e., within one week of) a detonation episode, to demonstrate that the OD unit is operating properly and that residual waste constituents are not contaminating soils above RCRA action levels. If annual sampling is not immediately approved, then analysis will be performed on a quarterly basis for the first eight quarters of permitted OD operations. After these eight quarters, sampling will revert to an annual basis provided that no signficant contamination, determined through statistical evaluation, is present at the OD area.

4.2 SAMPLE LOCATION

Sample locations will be chosen to adequately characterize any residual contamination from the OD waste treatment residues. Sampling points will be chosen closest to where the waste ordnance was detonated and where explosive residues and metal fragments remain. Sampling locations will include the bermed OD unit into which the unexploded ordnance was placed for destruction and all areas outside the bermed unit that may have received ejecta, metal fragments, or explosive residues resulting from treatment activities. The OD area will be divided into three zones for sampling purposes: (1) the OD unit, (2) north of the OD unit, and (3) south of the OD unit (see Fig. 1). One discrete sample will be taken from each zone for a total of three samples per sampling event. The exact location, dimensions, and depth of the OD bermed area will be noted in the Field Logbook before OD to ensure that proper sampling locations are chosen following treatment. The location of all ejecta will also be noted in the Field Logbook following OD to facilitate the selection of sampling locations.

Samples will be obtained from any obvious residue, discolored soil surfaces, and areas surrounding metal fragments or other ejecta. Whenever possible, sampling points will be located directly in the waste residue, discolored soil, and/or underneath the ejecta/metal fragments. Otherwise, sampling locations will be established as close to affected areas as possible, preferably within 6 in. Samples will be taken from surface and subsurface points as described in Sect. 4.4.

4.3 QC SAMPLES

This section addresses requirements for field QC samples. Field QC is monitored by a variety of QC samples taken with sufficient frequency to verify the quality of field samples. Field rinsates will be collected during each sampling event to ensure that decontamination procedures in the field

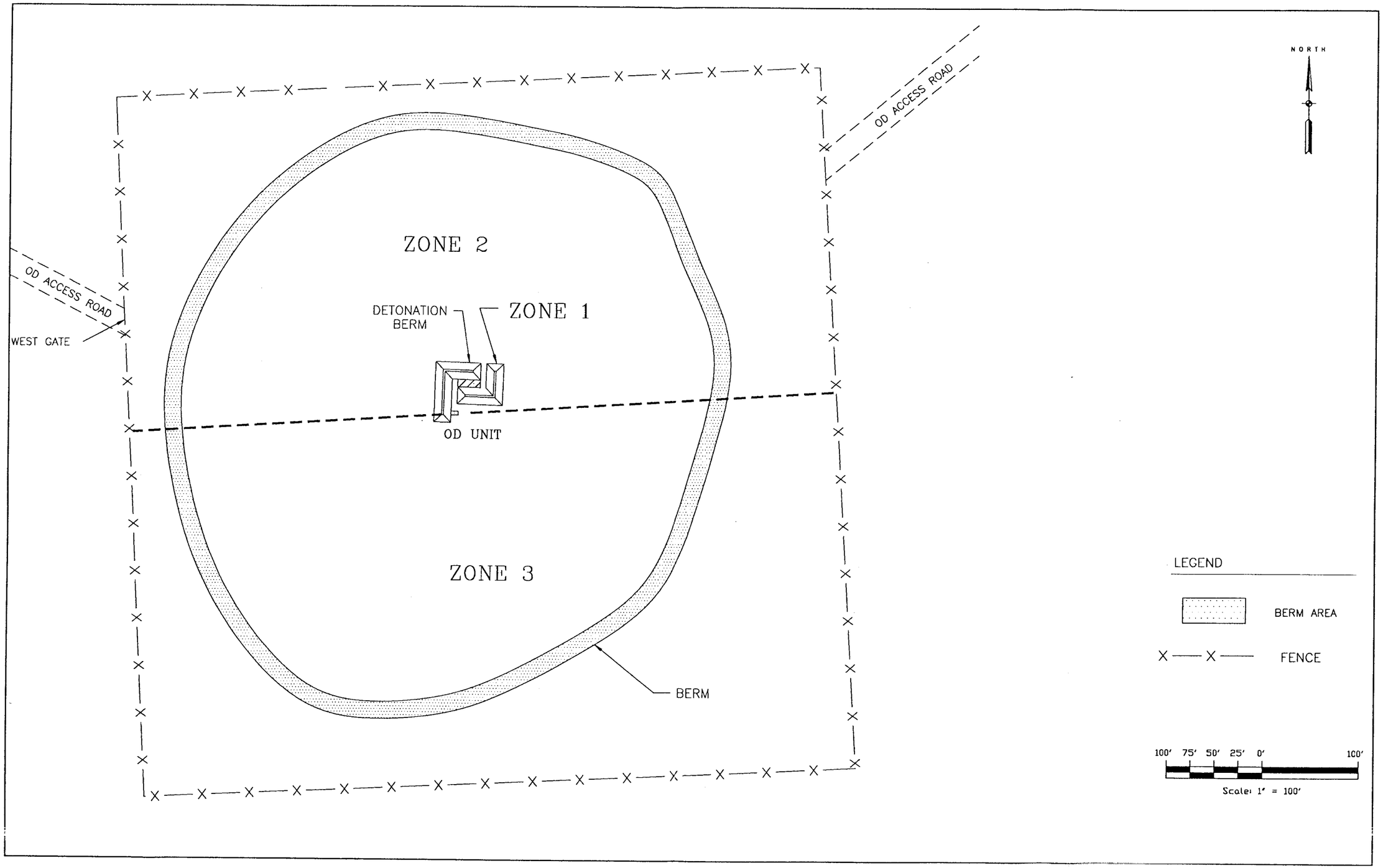

N:\26420512\01\BERMDESN\9-8-93

Figure 1. Sampling Zones, EOD Area, Melrose AFR

are adequate to prevent carryover of contamination from one sampling area to the next. Field rinsate blanks shall be collected by rinsing cleaned equipment with American Society for Testing and Materials (ASTM) Type II water and collecting the runoff as a sample. Field duplicates (samples taken at the same sampling location) will be collected during each sampling event. These duplicates are used to ensure that the sampling procedure is reproducible and that the sample is representative of the location. One duplicate sample will be taken from one of the three sampling zones (see Fig. 1). A different area will be chosen during each sampling event to ensure that over time duplicates are selected from all three sampling zones.

4.4 SAMPLING PROCEDURES

Required sampling equipment includes a soil auger for excavation, 100 - 500-mL glass vials, plastic caps, small stainless steel or Teflon-lined trowel, small stainless steel or Teflon-lined spatulas/scoops/spoons, and gummed labels for sample identification. Sampling procedures will be performed in accordance with ASTM D 1452, "Standard Practice for Soil Investigation and Sampling by Auger Borings," where applicable. Sampling procedures for the three sampling areas are as follows:

Zone 1: OD Unit

Samples will be collected from surface and subsurface soils to a minimum depth of 2 ft. The samples will be taken using a soil auger and a spatula, scoop, or spoon. A location within the bermed OD unit will be augured and sampled. When possible, sampling points will be located directly in the waste residue or visibly discolored soil. These procedures will ensure that the vertical and horizontal extent of any contamination will be adequately characterized.

Zone 2: North of the OD Unit

Samples will be collected from surface soil only to a maximum depth of 6-in. The samples will be taken using a spatula, scoop, or spoon. The area north of the OD unit receiving ejecta will be sampled to obtain an appropiate discrete sample or samples. When possible, sampling points will be located directly underneath the ejecta/metal fragments.

Zone 3: South of the OD Unit

Samples will be collected from surface soil only to a maximum depth of 6 in. The samples will be taken using a spatula, scoop, or spoon. The area south of the OD unit receiving ejecta will be sampled to obtain an appropiate sample or samples. Whenever possible, sampling points will be located directly underneath the ejecta/metal fragments.

Appropriate sampling information (date, time, sample number, etc.) and observations about the sample location will be recorded in the field logbook. A separate sampling implement will be used for each of the sampling locations. Field logbooks and chain-of-custody (COC) forms will be completed in accordance with Sects. 5 and 6 of this SAP. Samplers will be knowledgeable about care and preservation of environmental samples and the content of this SAP.

4.5 CONTAMINATION CONTROL

Sampling tools and equipment will be protected from contamination sources before sampling and decontaminated before and between sampling points. Sample containers should also be protected from contamination sources. Sampling personnel will wear chemical-resistant gloves when handling the sampling equipment and samples. Gloves will be decontaminated or disposed of between samples.

To prevent cross contamination, sampling equipment will be subject to decontamination procedures following sample collection at each location. Sampling equipment will be decontaminated in a decontamination zone by being:

- brush-scrubbed in tap water and Liquinox detergent wash in a tub to remove any soil from the equipment;
- rinsed in tap water in a separate tub;
- rinsed in deionized water;
- rinsed in isopropanol rinse;
- air-dried in an area upwind of the decontamination process; and
- stored for future sampling after being wrapped in aluminum foil (shiny side out).

4.6 HEALTH AND SAFETY PROCEDURES

Personnel performing sampling activities will utilize personal protective equipment such as rubber gloves, boots, aprons, and eye protection, if deemed necessary. Personnel will not be permitted to conduct any sampling until they have been cleared by the range contractor and EOD personnel.

5. SAMPLING HANDLING AND CHAIN OF CUSTODY

COC procedures will be followed to track possession of the samples from the time the samples are collected until the analytical data from the samples are received and recorded. For all soil samples, procedures will begin once sampling is complete. A sample will be considered under custody if it is:

- in the possession of the sampling team;
- in view of the sampling team; or
- transferred to a secure area.

An area is considered secure only when it is locked and access is controlled. The sampling team leader is responsible for custody of the collected samples in the field until they have been properly transferred to the shipping coordinator, who is responsible for sample custody until the samples are properly packaged, documented, and released to a courier or directly to the analytical laboratory. A COC record such as the one shown in Fig. 2 will be used for the sampling effort.

5.1 SAMPLE CONTAINER AND PRESERVATION REQUIREMENTS

The following arrangements will be made ahead of time for the selected laboratory to conform to the following special requirements:

- Method 6010 Elemental Metals: Refrigerate the samples at 4°C until analysis.
- Method 7471 Mercury: Refrigerate the samples at 4°C until analysis.
- Method 8330 Explosive Residues: If soil samples are wet, they should be air dried at room temperature or colder. Refrigerate the samples at 4°C until analysis.

Table 2 summarizes the container, preservative, and holding time requirements for the samples to be collected.

CHAIN-OF-CUSTODY RECORD

№ S 01379

PROJECT NAME:

PROJECT NUMBER:

SAMPLERS (SIGNATURE)

PRINTED NAME

CLIENT ID (9 CHARACTERS)

1	2	3	4	5	6	7	8	9

#	GC/MS					GC							INORGANICS				OTHER											SAMPLING INFO		REMARKS
No. of Bottles/Vials:	624-8240	625-8270	CLP-VOA	CLP-SVOA	Other:	601-8010	602-8020	608-8080	8140	CLP Pest/PCBs	Herbicides	Other:	Metals	Cyanide	CLP Metals	Other:	TOC	TOX	Oil & Grease	Pet. Hydro.	Phenols	Neutron Activation					MATRIX: Water/Soil/Sediment	DATE	TIME	

RELINQUISHED BY:	Date/Time	RELINQUISHED BY:	Date/Time	RELINQUISHED BY:	Date/Time	SHIPPING INFORMATION
COMPANY NAME:		COMPANY NAME:		COMPANY NAME:		Number of Shipping Containers:
						Method of Shipment
RECEIVED BY:	Date/Time	RECEIVED BY:	Date/Time	RECEIVED BY:	Date/Time	
COMPANY NAME:		COMPANY NAME:		COMPANY NAME:		
RELINQUISHED BY:	Date/Time	RELINQUISHED BY:	Date/Time	RELINQUISHED BY:	Date/Time	Special Handling Requirements
CO' NY NAME:		COMPANY NAME:		COMPANY NAME:		

Figure 2. Typical chain-of-custody form

Table 2. Summary of sample container, preservative, and holding time requirements.

SW 836 Method	Analyte	Container	Preservative	Holding time
6010	elemental metals	600-ml wide-mouthed glass or plastic jar	none, cool, 4°C	14 days to extraction 26 months after extraction
7471	mercury	400-ml wide-mouthed glass or plastic jar	none, cool, 4°C	14 days to extraction 28 days after extraction
8330	explosive residues	60-ml wide-mouthed amber glass jar with Teflon-lined cap	none, cool, 4°C	14 days to extraction 40 days after extraction

5.2 PACKAGING AND TRANSPORTATION

At the end of each sampling day, samples will be packaged in shipping containers with ice packs. The samples will be carefully packaged so that they will not break during shipping. Each shipping container will be sealed with a custody seal and shipped to the analytical laboratory by an overnight delivery service.

6. DOCUMENTATION OF ACTIVITIES

6.1 SAMPLE CODING

Labels for sample containers will be uniquely coded to identify the individual composite sample's location, the treatment unit, and date. Examples of a sample code for the three sampling zones are listed below.

- ODU080193 (OD unit sample taken on August 1, 1993)
- SOD080193 (sample from south of the OD unit taken on August 1, 1993)
- NOD080193 (sample from north of the OD unit taken on August 1, 1993)

6.2 SAMPLE IDENTIFICATION

The samples collected will be identified by a tag or other means (e.g., tape) along with the following information:

- Collector name,
- Sample code,
- Place of collection (facility and location),
- Date sample taken, and
- Time sample taken.

Any other information deemed necessary will also be added to the tag.

6.3 FIELD LOGBOOKS

Bound, water-resistant field logbooks and waterproof black ink pens will be used to document the methodology, procedures, and events pertaining to sample and data acquisition. The logbooks will be considered formal documents representing a complete and organized record of all field activities. The entries will include, but not be limited to the following:

- personnel present;
- name of sampler(s)
- date and time of every recording;
- work location;
- description of work and treatment process;
- purpose of sampling;
- environmental conditions (previous 24 hr and present weather conditions, amount and date of last precipitation, and any other conditions or activities that would affect samples);
- soil sample descriptions;
- description and location of area sampled;
- sample numbers;
- field QC data;
- other important notes on field activities, conditions, or problems; andinitials/signature of person entering data.

Entries made in the logbook should be of sufficient detail to reconstruct the taking of a sample by the reading of the entries and information recorded in it. No erasures or deletion marks are permitted. If a mistake is made in a logbook, it is corrected by placing a line through the error and rewritten in the note section.

7. LABORATORY ANALYSIS

7.1 LABORATORY

Design and execution of the testing program will be coordinated with an analytical chemist with experience in contaminated soil testing. The laboratory report will state the following in distinguishable print:

- dates of sampling and testing,
- sample descriptions and numbers,
- name and address of the laboratory performing the tests,
- name and qualifications of the person performing the test,
- test method used for all tests,
- detection limits achieved, and
- name and model number of major instruments used.

EPA SW-846 addresses all procedures proposed in this SAP. Extracts will be analyzed using Method 7471 for mercury and Method 6010 for elemental metals. The Method of Standard Addition will be performed for each metal on one of the submitted samples per sampling event. The laboratory will be required to achieve the required or estimated detection limits as specified in EPA SW-846. If equivalent methods are used, this must be justified in advance. Approval for any equivalent methods employed by the laboratory will be at the discretion of Cannon AFB and NMED.

7.2 QA/QC

For all tests, the samples will be spiked with known quantities of the hazardous constituent and spike concentration and percent recovery reported. The surrogate spike recoveries will be reported for all organic tests. Results from method blanks on the samples will be submitted. Blanks will not be subtracted. The method of how the reported lower detectable limit was determined must also be reported. To ensure that the established data quality objectives (DQOs) can be attained, the level of analytical quality achieved will be at least Level III. One set of samples (samples collected in any one day or one sample package) per year will undergo the more rigorous QA/QC to ensure data of Level IV data quality. The laboratory will report data equivalent to Contract Laboratory Program (CLP) Routine Analytical Services deliverables. Data will be sufficiently documented to allow personnel to review and evaluate data quality. Other samples sent for that year will be tested by the same analytical methods, but will require less QA/QC and reporting requirements to achieve Level III data quality. Quick turn-around time on the Level III data will allow Cannon AFB to determine whether, based on the results, the OD treatment process is affecting the environment.

7.3 SAMPLING DQOs

DQOs are quantitative and qualitative statements specified to ensure that data of known and appropriate quality are obtained during sampling. The overall objective of sampling is to provide an accurate, precise, and representative confirmation that the OD unit treatment process is not contaminating surrounding soils above RCRA action or background levels. DQOs will be followed in terms of precision, accuracy, representativeness, completeness, and comparability (PARCC). The PARCC parameters indicate data quality. The procedures described in this section are designed to obtain PARCC, for each sampling and analytical method and analysis.

7.3.1 Precision

Precision is a measure or estimate of the reproducibility of measurements under a given set of conditions. Specifically, precision is a qualitative measure of the variability of a group of measurements compared to their average value. A simple measure of precision is the standard deviation. The methods and protocols found in the most recent version of EPA SW-846 will be used by the laboratory performing the sample analyses.

The overall precision of measurement data is a mixture of sampling and analytical factors. The objective for precision in the chosen laboratory for certain samples is to equal the precision demonstrated for the CLP methods on similar samples. Laboratories commonly determine precision from duplicate samples; thus, precision is usually expressed as relative percent difference (RPD). The calculation for RPD is:

$$RPD = \frac{V1 - V2}{(V1 + V2)/2 \times 100}$$

where V1 and V2 are the reported concentrations for each duplicate sample.

7.3.2 Accuracy

Accuracy is the ability to obtain a true value. The accuracy of an entire measurement system indicates any bias that exists; this is generally difficult to measure through the entire data collection process, since there are potentially many sources of error. These include the sampling process, field and laboratory cross contamination, preservation, handling, sample matrix, sample preparation, and analytical techniques. Sampling accuracy can be assessed by evaluating the results of field blanks; and analytical accuracy, through use of known and unknown QC samples and matrix spiked samples.

Laboratory accuracy is checked by adding a known amount of surrogate compounds to a sample and ensuring that amount is recovered in the analysis. Surrogate compounds are compounds

unlikely to be found in actual samples. This addition of a compound(s) is referred to as spiking, and the samples are referred to as spikes. The objective for accuracy in the chosen laboratory for certain samples is to equal the accuracy demonstrated for the CLP methods on similar samples being analyzed for similar concentrations of contaminants. Laboratory accuracy is expressed as percent recovery (PR), calculated by:

$$PR = \frac{Ss - So}{Sa \times 100}$$

where So is the background value obtained by analyzing the sample (before the spike is added), Sa is the concentration of the spike added to the sample, and Ss is the value obtained by analyzing the sample after the spike has been added.

7.3.3 Representativeness

Representativeness expresses the degree to which sample data accurately and precisely represent a characteristic of a population, parameter variations at a sampling point, or an environmental condition. Representativeness is a qualitative parameter most concerned with the proper design of the sampling program. The representativeness criterion is satisfied by carefully selecting sample locations, sampling techniques, analytical techniques, and collecting a sufficient number of samples. Adherence to this SAP will ensure that sufficient representativeness has been achieved.

7.3.4 Completeness

Completeness is a measure of the amount of data actually obtained as compared to the amount of data planned to be obtained. Situations sometimes arise in the field and the laboratory that may deter the progress of an investigation. Technical difficulties are sometimes encountered both in the field and in the laboratory.

Completeness is recorded in the laboratory by comparing the number of theoretically obtainable results under ideal conditions to the actual number of valid results obtained. CLP data has been found to be 80 to 85% complete (PC) on a nationwide basis; therefore, the completeness goal for this sampling effort is 80%. The PC is calculated by:

$$PC = \frac{Na}{Ni \times 100}$$

where Na is the actual number of valid results obtained and Ni is the number of results that may have been obtained under ideal conditions.

7.3.5 Comparability

Comparability reflects the confidence with which data sets can be compared to each other. This is accomplished through using standard sampling techniques for all sampling events and standard analyzing techniques for all samples. Comparability is limited to the precision and accuracy parameters of PARCC, because only when these parameters are known can data sets be compared with confidence.

7.4 SAMPLE RETURN OR DISPOSAL

Unless directed otherwise by Cannon AFB, the laboratory will dispose of all soil samples following analysis. The laboratory will provide certification that its facilities qualify for the exemption in 40 Code of Federal Regulations (CFR) 261.4(d), which excludes waste samples from many hazardous waste management requirements. In addition, all laboratories will provide the base with an explanation of the disposal practices employed with respect to sample residual.

8. STATISTICAL ANALYSIS

The data collected will be evaluated annually to draw statistical conclusions and to demonstrate statistically the migration potential of all waste constituents. To provide statistical comparisons for evaluating analytical data, quantitative analysis will be performed using Cochran's Approximation to the Behrens-Fisher Student's t-Test. The analytical results from the routine soil sampling will be compared to background results for each parameter analyzed. The results from background sampling are found in Appendix E of the Permit Application.

The Cochran's Approximation to the Behrens-Fisher Student's t-Test is described below:

For any set of data (X_1, X_2, . . ., X_n) the mean is calculated by:

$$\overline{X} = \frac{X_1 + X_2 t \ . \ . \ . \ + X_n}{n}$$

and the variance is calculated by:

$$s^2 = \frac{(X_1 - \overline{X})^2 + (X_2 - \overline{X})^2 \ldots + (X_n - \overline{X})^2}{n-1}$$

where "n" denotes the number of observations in the set of data.

The t-test uses these data summary measures to calculate a t-statistic (t^*) and a comparison to calculate a t-statistic (t_c). The t^* value is compared to the t_c value and a conclusion is reached about whether there has been a statistically significant change in any indicator parameter. The t-statistic for all parameters except pH and similar monitoring parameters is:

$$t^* = \frac{\overline{X}_M^2 - \overline{X}_B^2}{\sqrt{\frac{S_M^2}{n_m} + \frac{S_B^2}{n_b}}}$$

If the value of this t-statistic is negative, then there is no significant difference between the monitoring data and the background data. However, significantly small negative values may indicate that failure of the assumption made for the test validity occurred, or errors were made in collecting the background data.

The t-statistic (t_c) against which t^* will be compared, necessitates finding t_b and t_m from standard (one-tailed) (see Table 3) where,

t_b = t-tables with (n_b-1) degrees of freedom, at a 0.05 level of significance
t_m = t-tables with (n_m-1) degrees of freedom, at a 0.05 level of significance

Finally, the special weightings W_b and W_m are defined as:

$$W_B = \frac{s_b^2}{n_b} \qquad\qquad W_m = \frac{s_m^2}{n_m}$$

and so the comparison t-statistic is:

$$t_c = \frac{W_b t_b + W_m t_m}{W_b + W_m}$$

Table 3. Standard T-Tables 0.05 Level of Significance

Degrees of Freedom (n)	t-values (1-tail)	t-values (2-tail)
1	6.314	12.706
2	2.920	4.303
3	2.353	3.182
4	2.132	2.776
5	2.015	2.571
6	1.943	2.447
7	1.895	2.365
8	1.860	2.036
9	1.833	2.262
10	1.812	2.228
11	1.796	2.201
12	1.782	2.179
13	1.771	2.160
14	1.761	2.145
15	1.753	2.131
16	1.746	2.120
17	1.740	2.110
18	1.734	2.101
19	1.729	2.093
20	1.725	2.086
21	1.721	2.080
22	1.717	2.074
23	1.714	2.069
24	1.711	2.064
25	1.708	2.060
30	1.697	2.042
40	1.684	2.021

The t-statistic (t^*) is now compared with the comparison t-statistic (t_c) using the following decision rule:

1. If t^* is equal to or larger than t_c ($t^* \geq t_c$), then conclude that there most likely has been a significant increase in this specific parameter.

2. If t^* is less than t_c then ($t^* < t_c$), then conclude that most likely there has not been a change in this specific parameter.

The t-statistic for testing pH and similar monitoring parameters is constructed in the same manner as previously described except that the negative sign (if any) is discarded and the caveat concerning small negative values is ignored. The standard (two-tailed) tables are used in the construction t_c for pH and similar monitoring parameters. Comparison of t^* and t_c follows the same decision rules listed above.

A further discussion of the test method may be found in *Statistical Methods* (6th Edition, Sect. 4.14) by G. W. Snedecor and W. G. Cochran.

9. DATA RESOLUTION

After statistical evaluation of the routine environmental sampling results (described in Sect. 8) has been completed, any results found to be above background levels will be flagged. In addition to the statistical comparison of analytical results with background levels, all results will also be compared with RCRA Subpart S action levels for soil. The RCRA Subpart S soil action levels are presented in Table 4 for the analytes being tested at Melrose AFR. If an analyte is not listed in Table 4, a soil action level has not yet been established by EPA. Any results found to exceed the Subpart S soil action levels will also be flagged. All flagged data, if any, will be reported to NMED quarterly. Based on the number of flagged data, the parameters that exceed action levels and/or background, and the magnitude of the exceedance(s), Cannon AFB and NMED will decide if (1) additional sampling is required, (2) remediation is required, or (3) use of the OD unit should be suspended and treatment methods reevaluated.

Table 4. RCRA Proposed Subpart S Media Action Levels

Chemical	Soil Action Levels[a]	
	noncarcinogenic (mg/kg)	carcinogenic (mg/kg)
ELEMENTAL METALS		
Antimony	3.20e+01	--
Arsenic	2.40e+01	--
Barium	5.60e+03	--
Beryllium	4.00e+02	1.63e-01
Cadmium	8.00e+01	--
Chromium (III)	8.00e+04	--
Chromium (VI)	4.00e+02	--
Copper	3.20e+03	--
Lead	1.14e+02	--
Nickel	1.60e+03	--
Selenium	4.00e+02	--
Silver	4.00e+02	--
Thallium	0.4e+01	--
Vanadium	5.60e+02	--
Zinc	1.60e+04	--
EXPLOSIVE RESIDUES[b]		
1,3-Dinitrobenzene	8.00e+00	--
2,4-Dinitrotoluene	1.60e+02	--
Nitrobenzene	4.00e+01	--

[a]Action levels are based on criteria outlined in Appendix D and Appendix E of the proposed rule.

[b]Action levels have yet to be established for all other explosive compounds listed in Table 1.

Source: Proposed 40 CFR Section 264.521

10. REFERENCES

New Mexico Environment Department, Hazardous and Radioactive Materials Bureau. "Notice of Deficiency Comments for Melrose Air Force Range RCRA Operating Permit." December 22, 1992, Santa Fe, New Mexico.

Snedecor, G.W. and Cochran, W.G. *Statistical Methods*, 6th Edition, Sect. 4.14

U.S. Environmental Protection Agency (EPA) November 1986. *Test Methods for Evaluating Solid Waste,* SW-846, 3rd Edition, Office of Solid Waste and Emergency Response, Washington, D.C.

Sampling and Analysis Plan for the Open Detonation Unit Melrose Air Force Range, New Mexico

February 1994

Prepared for
Cannon Air Force Base
New Mexico

Prepared by
Radian Corporation
120 South Jefferson Circle
Oak Ridge, Tennessee 37830

For Official Use Only

Sampling and Analysis Plan for the Open Detonation Unit Melrose Air Force Range, New Mexico

February 1994

Prepared for
Cannon Air Force Base, New Mexico

Prepared by
Radian Corporation
120 South Jefferson Circle
Oak Ridge, Tennessee 37830
Doc. #D940215.4PS51

TABLE OF CONTENTS

		Page
1.0	INTRODUCTION	1-1
2.0	SITE DESCRIPTION	2-1
3.0	SAMPLING APPROACH AND RATIONALE	3-1
3.1	Sample Approach	3-1
3.2	Analysis	3-1
3.3	Rationale	3-3
4.0	SAMPLING PROCEDURES AND METHODOLOGY	4-1
4.1	Sampling Frequency	4-1
4.2	Sample Location	4-1
4.3	QC Samples	4-3
4.4	Sampling Methodology	4-3
4.5	Contamination Control	4-8
4.6	Health and Safety Procedures	4-8
5.0	SAMPLE HANDLING AND COC	5-1
5.1	Sample Container and Preservation Requirements	5-1
5.2	Packaging and Transportation	5-3
6.0	DOCUMENTATION OF ACTIVITIES	6-1
6.1	Sample Coding	6-1
6.2	Sample Identification	6-1
6.3	Field Logbooks	6-2
7.0	LABORATORY ANALYSIS	7-1
7.1	Laboratory	7-1
7.2	QA/QC	7-1
7.3	Sampling DQOS	7-2
7.3.1	Precision	7-2
7.3.2	Accuracy	7-3
7.3.3	Representativeness	7-4

TABLE OF CONTENTS (Continued)

		Page
	7.3.4 Completeness	7-4
	7.3.5 Comparability	7-4
7.4	Sample Return or Disposal	7-5
8.0	STATISTICAL ANALYSIS	8-1
8.1	Preliminary Sample Calculations	8-1
8.2	Routine Sample Calculations	8-2
9.0	DATA RESOLUTION AND REMEDIAL RESPONSE	9-1
10.0	REFERENCES	10-1

LIST OF FIGURES

		Page
4-1	Sampling Strata, OD Unit, Melrose AFR	4-2
5-1	Typical COC Form	5-2

LIST OF TABLES

3-1	Test Methods for Soils	3-2
5-1	Summary of Sample Container, Preservative, and Holding Time Requirements	5-4
9-1	Calculated Risk-Based Action Levels for Soils	9-2

ACRONYMS

AFB	Air Force Base
AFR	Air Force Range
ASTM	American Society for Testing and Materials
CFR	Code of Federal Regulations
CLP	Contract Laboratory Program
COC	chain of custody
DQO	data quality objective
EOD	explosive ordnance disposal
EPA	U.S. Environmental Protection Agency
GZ	Ground Zero
NMED	New Mexico Environmental Department
OD	open detonation
PARCC	precision, accuracy, representativeness, completeness, and comparability
PC	percent complete
PR	percent recovery
QA	quality assurance
QC	quality control
RCRA	Resource Conservation and Recovery Act
RPD	relative percent difference
SAP	Sampling and Analysis Plan
SVOC	semivolatile organic compound
USAF	U.S. Air Force
VOC	volatile organic compound

1.0 INTRODUCTION

This Sampling and Analysis Plan (SAP) has been prepared to support the Resource Conservation and Recovery Act (RCRA) Subpart X Permit Application for the Melrose Air Force Range (AFR), assigned to Cannon Air Force Base (AFB), New Mexico. Melrose AFR is operated under contract by Westar Corporation, which also provides day-to-day maintenance of the explosive ordnance disposal (EOD) range. This SAP provides guidance for the required routine environmental sampling at the open detonation (OD) unit at Melrose AFR. Environmental sampling is necessary to demonstrate that the OD unit is operating so that residual waste constituents are not contaminating soils above RCRA action levels and/or background levels. The plan provides procedures to routinely test the soils at the OD unit to monitor the effectiveness of the treatment process and to ascertain whether any contamination has impacted ambient soils.

The plan ensures that sufficient samples are taken to draw statistical conclusions and to statistically demonstrate the migration potential of all waste constituents. The plan also explains how and why samples are collected and the spatial relationships for sample collection. The plan's design is based on U.S. Air Force (USAF) OD operational procedures, knowledge of the waste munitions' characteristics, and the environmental conditions at Melrose AFR. Where applicable, the procedures and quality assurance/quality control (QA/QC) techniques in U.S. Environmental Protection Agency's (EPA's) November 1986 Test Methods for Evaluating Solid Waste have been used to prepare this SAP.

Specific sections covered in this plan include: Site Description; Sampling Approach and Rationale; Sampling Procedures and Methodology; Health and Safety Procedures; Sample Handling and Chain of Custody (COC); Sample Documentation; Laboratory Procedures; QA/QC; Statistical Analysis; and Data Resolution and Remedial Response.

2.0 SITE DESCRIPTION

The OD unit is within the boundaries of Melrose AFR in Roosevelt County, New Mexico, approximately 25 miles west-southwest of Cannon AFB. The location of Melrose AFR and the exact location of the OD unit are shown in Figures B-2 and B-3 of Section B of the permit application. The OD area within which the OD unit is located generally consists of a 700-ft cleared, circular area devoid of vegetation and debris and encircled by an earthen berm. The OD unit is described in detail in Section B of the permit application, as well as the environmental conditions, including geology, hydrogeology, topographic and drainage features, and climate at the Melrose AFR. The OD unit is operated in accordance with Cannon AFB Regulation 136-18, USAF Regulation Technical Orders 11A-1-42, 60A-1-1-31, Maintenance Operation Instructions 136-6, and USAF Regulation 127-100 (Appendix C). Section D of the permit application describes the unit's operation in detail.

3.0 SAMPLING APPROACH AND RATIONALE

3.1 Sample Approach

Enough samples must be collected and analyzed to draw statistical conclusions and to demonstrate the migration potential of all hazardous waste constituents from the OD unit. Weapons testing site sampling plans differ from the simple random sampling procedures employed at other hazardous waste sites because concentrations of contaminants are stratified, i.e., greater and most variable at Ground Zero (GZ) and decrease with distance.

Sometimes, a systematic radii sampling procedure is employed. The systematic radii method has certain disadvantages in that incorrect conclusions may be drawn if the sampling pattern corresponds exactly or approximately to a pattern of contaminant distribution over space and time. Therefore, a stratified random sampling approach has been chosen for this sampling plan to help overcome this disadvantage. Sampling methodology and location are discussed in more detail in Section 4 of this plan.

3.2 Analysis

This section summarizes the analytical procedures to be followed for proper site characterization. Soil samples will be analyzed for all toxic metals, including priority pollutant metals, listed in the New Mexico Hazardous Waste Management Regulations-7, Part V, Appendix IX, for explosive residues, and soil moisture. Table 3-1 lists all analytes as referenced above, along with their EPA SW-846 or American Society for Testing and Materials (ASTM) test methods. Analytical requirements are discussed further in Section 7.

Table 3-1

Test Methods for Soils

Parameter/ Constituent	EPA Hazardous Waste Number	Test Method	Reference
Explosive Compounds	D003	Method 8330	Test Methods for Evaluating Solid Waste, Physical and Chemical Methods, EPA SW-846, 3rd Ed. November 1986 (amended)
HMX RDX 1,3,5-TNB 1,3-DNB Tetryl NB 2,4,6-TNT 2,4-DNT 2,6-DNT 2-NT 3-NT 4-NT			
Toxic Metals			Test Methods for Evaluating Solid Waste, Physical and Chemical Methods, EPA SW-846, 3rd Ed. November 1986 (amended)
Antimony	—	6010	
Arsenic	D004	6010	
Barium	—	6010	
Beryllium	—	6010	
Cadmium	D006	6010	
Chromium	D007	6010	
Copper	—	6010	
Lead	D008	6010	
Mercury	D009	7471	
Nickel	—	6010	
Selenium	D010	6010	
Silver	D011	6010	
Soil Moisture	—	ASTM D 2216	Laboratory Determination of Moisture Content of Soil, ASTM D 2216-71, 1972.

3.3 Rationale

Melrose AFR has never been used for the research and development of nuclear, chemical warfare, or other exotic warfare types of weapons. The only munitions delivered or disposed of at Melrose AFR have been conventional live and training munitions. Therefore, the chemical components and combustion by-products are consistent with what is typical for military munitions items; thus, the emphasis of sampling and analysis for the OD unit should be to search only for the constituents present in these types of wastes. This rationale is supported by the studies conducted to characterize emissions from thermal treatment (OD) of explosive munitions (the "Bang Box" studies conducted by Johnson et. al during 1991 and 1993). These studies included emissions analyses for volatile organic compounds (VOCs), semivolatile organic compounds (SVOCs), and metals. Conclusions drawn from the emissions testing of selected ordnance found that VOCs were consistently detected at trace concentrations and that SVOCs were detected at approximately two orders of magnitude less than metals (which is the primary indicator and most persistent form of contamination). Together, this approach supports using the analytical methods described in Table 3-1. Any further investigations should be addressed during closure of the unit, and then only if appropriate.

4.0 SAMPLING PROCEDURES AND METHODOLOGY

4.1 Sampling Frequency

Soil sampling will occur quarterly, immediately after (within one week of) a detonation episode, to demonstrate that the OD treatment activities are being performed properly and that residual waste constituents are not contaminating soils above RCRA action levels and/or background concentrations. If, after two years of quarterly monitoring, results from sampling indicate soils within the OD area are unaffected, then, with prior approval from New Mexico Environment Department (NMED), sampling frequency will be changed to an annual basis.

4.2 Sample Location

Sample locations will be chosen based on a stratified random sampling approach to adequately characterize any residual contamination from the OD waste treatment residues. A stratified random sample is obtained by separating the population elements into non-overlapping groups, called strata, and then selecting a simple random sample from each stratum.

Sampling locations will include the bermed OD unit into which the unexploded ordnance was placed for destruction and all areas outside the bermed unit that may have received ejecta, metal fragments, or explosive residues resulting from treatment activities. The OD area will be divided into three strata for sampling purposes: (1) Stratum A, (2) Stratum B, and (3) Stratum C (see Figure 4-1). Prevailing wind direction will be determined prior to each detonation episode and will be noted in the field logbook before OD to ensure that proper sampling locations are chosen following detonation.

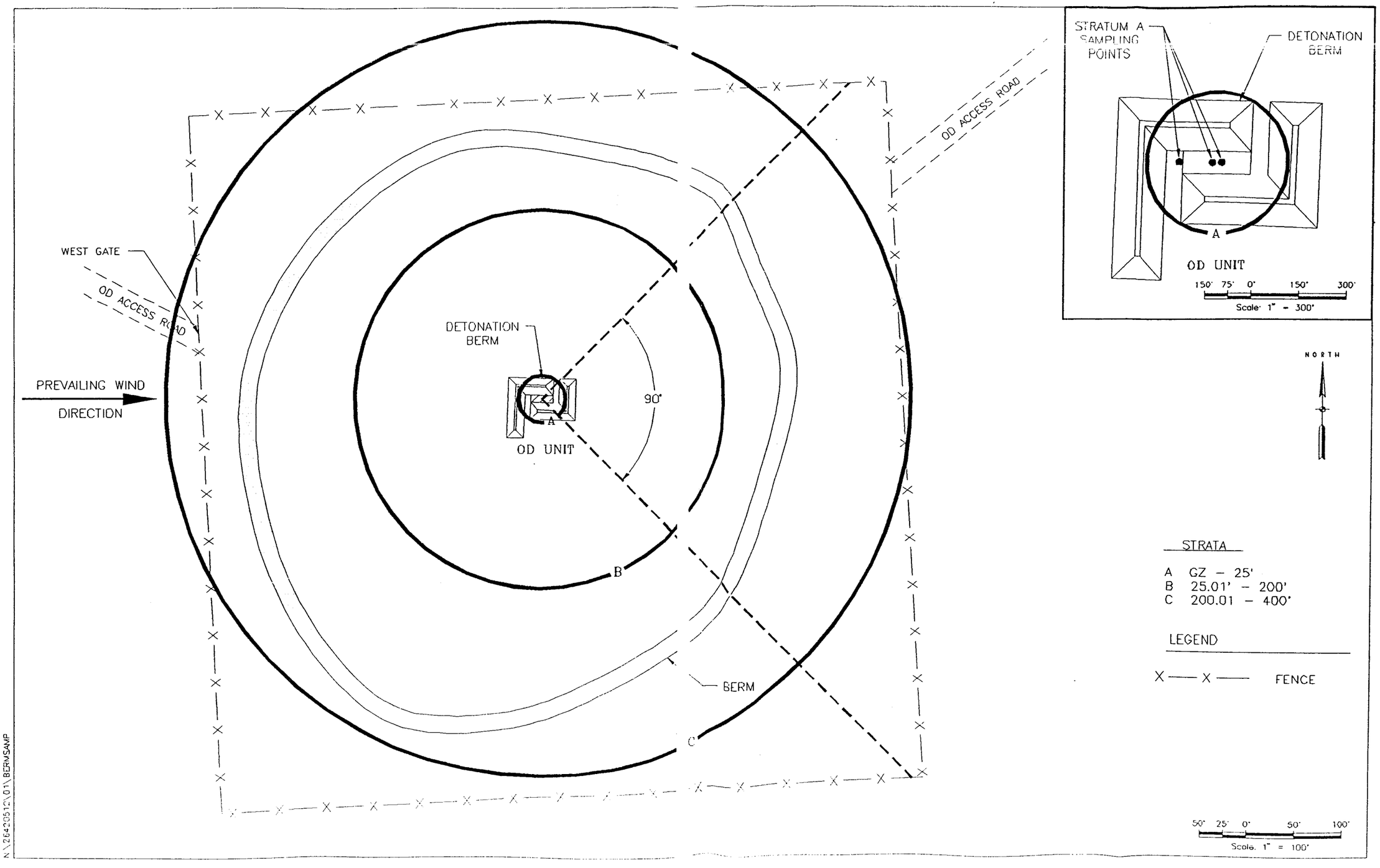

Figure 4-1. Sampling Strata, OD Unit, Melrose AFR

4.3 QC Samples

This section addresses requirements for field QC samples. Field QC is monitored by a variety of QC samples taken with sufficient frequency to verify the quality of field samples. Field rinsates will be collected during each sampling event to ensure that decontamination procedures in the field are adequate to prevent carryover of contamination from one sampling area to the next. Field rinsate blanks shall be collected by rinsing cleaned equipment with ASTM Type II water and collecting the runoff as a sample. Field duplicates (samples taken at the same sampling location) will be collected during each sampling event. Duplicates ensure that the sampling procedure is reproducible and that the sample is representative of the location. One duplicate sample will be taken from one of the three sampling strata (see Figure 4-1). A different area will be chosen during each sampling event to ensure that, over time, duplicates are selected from all three sampling strata.

4.4 Sampling Methodology

A stratified random sampling plan has been chosen for this site based on the unique contaminant distribution associated with detonation sites. There are three reasons stratified random sampling often results in increased information for a given cost:

1. The data should be more homogenous within each stratum than in the population as a whole.

2. The cost of conducting the actual sampling tends to be less for stratified random sampling than for simple random sampling because of administrative convenience.

3. When stratified sampling is used, separate estimates of population parameters can be obtained for each stratum without additional sampling.

If prior or historical data can be validated and placed in the appropriate stratum, then the following statistical equation can be used to determine initial sample (n_0) size.

$$n_0 = \sum_{i=1}^{h} \frac{W_h S_h^2}{V} \qquad (1)$$

where V is the specified variance. If, instead the margin of error, "d" has been specified, then $V=(d/t)^2$, where "t" is the normal deviate corresponding to the allowable probability that the error will exceed the desired margin. For example, if the margin of error of the sample results is estimated at $\pm$ 5% of the true population mean, then d = 0.05. Also, if the experimenter designates a 1 in 100 chance of pulling an invalid sample (99% confident), then this would give an α value of 0.01. The corresponding t value to α is 2.58. W_h is the stratum weight and S^2_h is the stratum variance.

If prior data cannot be validated and stratified, a minimum of three preliminary random samples need to be taken from each stratum. Three samples were chosen to produce somewhat statistically meaningful results. This value is not based upon any statistical formula and should only be used as a rough estimate to determine the population mean and variance. This information will then be used to help determine the number of samples needed to develop a 99% confidence interval for levels of contaminants (population mean).

If preliminary random sampling is conducted, it is recommended for the preliminary sampling effort to consist of three strata:

- Stratum A: GZ to 25-ft radius
- Stratum B: intermediate zone between 25.01- to 200-ft radius from GZ
- Stratum C: outer zone from 200.01- to 400-ft radius from GZ

Required sampling equipment includes a soil auger for excavation, containers consisting of 100- to 500-mL glass vials, plastic caps, small stainless steel or Teflon-lined

trowel, small stainless steel or Teflon-lined spatulas/scoops/spoons, and gummed labels for sample identification. Sampling procedures will be performed in accordance with ASTM D 1452, "Standard Practice for Soil Investigation and Sampling by Auger Borings," where applicable.

Preliminary and quarterly sampling procedures for the three sampling areas are as follows:

Stratum A: GZ to 25 ft

Stratum A includes the bermed area and the area up to a 25-ft radius of GZ. It is assumed that this area possesses a normal contaminant distribution. As mentioned earlier, if historical data cannot be validated and stratified, it will be necessary to perform preliminary sampling to determine the number of samples required to estimate the population mean per detonation event.

A minimum of three random samples is required to calculate the number of additional samples needed to develop a 99% confidence interval for the population mean. However, NMED has requested a minimum of five preliminary samples for a better estimate of initial sample size. Samples will be collected from two soil borings advanced within the detonation crater to a depth of 5 ft. Within each soil boring, two samples will be collected—one at surface (top 6 in.) and one at 5 ft below ground surface. One additional surface soil sample will be taken at the bottom of the sloped detonation pad (see the inset in Figure 4-1). Additional sampling will be performed according to the results of this calculation to produce statistically valid results (Section 8 discusses statistical analysis in greater detail).

Appropriate sampling information (date, time, sample number, etc.) and observations about the sample location will be recorded in the field logbook. A separate sampling implement will be used for each of the sampling locations. Field logbooks and

COC forms will be completed in accordance with Sections 5 and 6 of this SAP. Samplers will be knowledgeable about care and preservation of environmental samples and the content of this SAP

Stratum B: 25.01 to 200 ft

Stratum B is the intermediate zone between the 25.01- and 200-ft radius from GZ. It is assumed that this area possesses a normal contaminant distribution. However, due to prevailing wind direction, higher concentrations of contaminants could exist due to wind effects. To compensate for this possibility, the prevailing wind direction will be noted for each detonation period. It is assumed that the area 45° on either side of the prevailing wind direction will be the most contaminated. Therefore, samples will be randomly chosen in this area to produce a more conservative estimate of the population mean.

Three random preliminary samples will be taken, and the results will be used to calculate the initial sample size. Additional sampling will be performed according to the results of this calculation to produce statistically valid results (see Section 8). Samples will be collected from surface soil to a maximum depth of 6 in. The samples will be taken using a spatula/scoop/spoon according to ASTM D 1452.

Appropriate sampling information (date, time, sample number, etc.) and observations about the sample location will be recorded in the field logbook. A separate sampling implement will be used for each of the sampling locations. Field logbooks and COC forms will be completed in accordance with Sections 5 and 6 of this SAP. Samplers will be knowledgeable about care and preservation of environmental samples and the content of this SAP

Stratum C: 200.01 to 400 ft

Stratum C is designated as the outer zone from the 200.01- to 400-ft radius from GZ. It is assumed that this area possesses a normal contaminant distribution. However, due to prevailing wind direction, higher concentrations of contaminants could exist due to wind effects, as was indicated for Stratum B. To compensate for this possibility, the prevailing wind direction will be noted for each detonation period. It is assumed that the area 45° on either side of the prevailing wind direction will be the most contaminated. Therefore, samples will be randomly chosen in this area to produce a more conservative estimate of the population mean.

Three random preliminary samples will be taken, and the results will be used to calculate the initial sample size. Additional sampling will be performed according to the results of this calculation to produce statistically valid results (see Section 8). Samples will be collected from surface soil to a maximum depth of 6 in. The samples will be taken using a spatula/scoop/spoon according to ASTM D 1452.

If fall-out from a detonation event visibly exceeds the 400-ft radius designated for Stratum C, then two additional samples will be collected outside the perimeter of Stratum C at visually observed impact areas; upon analysis of results a Stratum D will be determined.

Appropriate sampling information (date, time, sample number, etc.) and observations about the sample location will be recorded in the field logbook. A separate sampling implement will be used for each of the sampling locations. Field logbooks and COC forms will be completed in accordance with Sections 5 and 6 of this SAP. Samplers will be knowledgeable about care and preservation of environmental samples and the content of this SAP.

4.5 Contamination Control

Sampling tools and equipment will be protected from contamination sources before sampling and decontaminated before and between sampling points. Sample containers should also be protected from contamination sources. Sampling personnel will wear chemical-resistant gloves when handling the sampling equipment and samples. Gloves will be decontaminated or disposed of between samples.

To prevent cross contamination, sampling equipment will be subject to decontamination procedures following sample collection at each location. Sampling equipment will be decontaminated in a decontamination zone by being:

- brush-scrubbed in tap water and Liquinox detergent wash in a tub to remove any soil from the equipment,
- rinsed in tap water in a separate tub,
- rinsed in deionized water,
- rinsed in isopropanol rinse,
- air-dried in an area upwind of the decontamination process, and
- stored for future sampling after being wrapped in aluminum foil (shiny side out).

4.6 Health and Safety Procedures

If deemed necessary, personnel performing sampling activities will use personal protective equipment such as rubber gloves, boots, aprons, and eye protection. Personnel will not be permitted to conduct any sampling until they have been cleared by the range contractor and EOD personnel. Sampling personnel will be properly trained in hazardous waste sampling, and have a minimum of 2 years sampling experience. Personnel will also have 29 Code of Federal Regulations (CFR) 1910.120 (Occupational Safety and

Health Administration training) and appropriate medical monitoring and certification. Sampling personnel will also be briefed by Cannon AFB on the hazards of sampling explosive compounds.

5.0 SAMPLE HANDLING AND COC

COC procedures will be followed to track possession of the samples from the time they are collected until the analytical data from the samples are received and recorded. For all soil samples, procedures will begin once sampling is complete. A sample will be considered under custody if it is:

- in the possession of the sampling team;
- in view of the sampling team; or
- transferred to a secure area.

An area is considered secure only when it is locked and access is controlled. The sampling team leader is responsible for custody of the collected samples in the field until they have been properly transferred to the shipping coordinator, who is responsible for sample custody until the samples are properly packaged, documented, and released to a courier or directly to the analytical laboratory. A COC record such as the one shown in Figure 5-1 will be used for the sampling effort.

5.1 Sample Container and Preservation Requirements

The following arrangements will be made ahead of time for the selected laboratory to conform to the following special requirements:

- Method 6010 Elemental Metals: Refrigerate the samples at 4°C until analysis.
- Method 7471 Mercury: Refrigerate the samples at 4°C until analysis.
- Method 8330 Explosive Residues: If soil samples are wet, they should be air dried at room temperature or colder. Refrigerate the samples at 4°C until analysis.

CHAIN-OF-CUSTODY RECORD

№ S02831

PROJECT NAME:

PROJECT NUMBER:

SAMPLERS (SIGNATURE)

PRINTED NAME

CLIENT ID (9 CHARACTERS)

1	2	3	4	5	6	7	8	9

#	GC/MS					GC							INORGANICS				OTHER											SAMPLING/INFO		REMARKS
No. of Bottles/Vials:	624-8240	625-8270	CLP-VOA	CLP-SVOA	Other:	601-8010	602-8020	608-8080	8140	CLP Pest/PCBs	Herbicides	Other:	Metals	Cyanide	CLP Metals	Other:	TOC	TOX	Oil & Grease	Pet. Hydro.	Phenols	Neutron Activation					MATRIX: Water/Soil/Sediment	DATE	TIME	

RELINQUISHED BY:	Date/Time	RELINQUISHED BY:	Date/Time	RELINQUISHED BY:	Date/Time
COMPANY NAME:		COMPANY NAME:		COMPANY NAME:	
RECEIVED BY:	Date/Time	RECEIVED BY:	Date/Time	RECEIVED BY:	Date/Time
COMPANY NAME:		COMPANY NAME:		COMPANY NAME:	
RELINQUISHED BY:	Date/Time	RELINQUISHED BY:	Date/Time	RELINQUISHED BY:	Date/Time
COMPANY NAME:		COMPANY NAME:		COMPANY NAME:	

SHIPPING INFORMATION

Number of Shipping Containers:

Method of Shipment

Special Handling Requirements

Figure 5-1. Typical COC Form

Table 5-1 summarizes the container, preservative, and holding time requirements for the samples to be collected.

5.2 Packaging and Transportation

At the end of each sampling day, samples will be packaged in shipping containers with ice packs. The samples will be carefully packaged so that they will not break during shipping. Each shipping container will be sealed with a custody seal and shipped to the analytical laboratory by an overnight delivery service.

Table 5-1

Summary of Sample Container, Preservative, and Holding Time Requirements

SW 836 Method	Analyte	Container	Preservative	Holding Time
6010	Elemental metals	600-mL wide-mouthed glass or plastic jar	None, cool, 4°C	14 days to extraction 26 months after extraction
7471	Mercury	400-mL wide-mouthed glass or plastic jar	None, cool, 4°C	14 days to extraction 28 days after extraction
8330	Explosive residues	60-mL wide-mouthed amber glass jar with Teflon-lined cap	None, cool, 4°C	14 days to extraction 40 days after extraction

6.0 DOCUMENTATION OF ACTIVITIES

6.1 Sample Coding

Labels for sample containers will be uniquely coded to identify the individual composite sample's location, the treatment unit, and date. Examples of a sample code for the three sampling zones are listed below.

- AOD080194 (OD unit sample taken within Stratum A on August 1, 1994)
- BOD080194 (sample from Stratum B of the OD unit taken on August 1, 1994)
- COD080194 (sample from Stratum C of the OD unit taken on August 1, 1994)

6.2 Sample Identification

The samples collected will be identified by a tag or other means (e.g., tape) along with the following information:

- Collector name,
- Sample code,
- Place of collection (facility and location),
- Date sample taken, and
- Time sample taken.

Any other information deemed necessary will also be added to the tag.

6.3 Field Logbooks

Bound, water-resistant field logbooks and waterproof black ink pens will be used to document the methodology, procedures, and events pertaining to sample and data acquisition. The logbooks will be considered formal documents representing a complete and organized record of all field activities. The entries will include, but not be limited to the following:

- personnel present; name of sampler(s);
- date and time of every recording;
- work location;
- description of work and treatment process;
- purpose of sampling;
- environmental conditions (previous 24-hour and present weather conditions, amount and date of last precipitation, and any other conditions or activities that would affect samples);
- soil sample descriptions;
- description and location of area sampled;
- sample numbers;
- field QC data;
- other important notes on field activities, conditions, or problems; and
- initials/signature of person entering data.

Entries made in the logbook should be of sufficient detail to reconstruct the taking of a sample by the reading of the entries and information recorded in it. No erasures or deletion marks are permitted. If a mistake is made in a logbook, it must be corrected by marking a line through the error and writing the correction in the note section.

7.0 LABORATORY ANALYSIS

7.1 Laboratory

Design and execution of the testing program will be coordinated with an analytical chemist experienced in contaminated soil testing. The laboratory report will state the following in distinguishable print: dates of sampling and testing, sample descriptions and numbers, name and address of the laboratory performing the tests, name and qualifications of the person performing the test, test method used for all tests, detection limits achieved, and name and model number of major instruments used.

EPA SW-846 addresses all procedures proposed in this SAP. Extracts will be analyzed using Method 7471 for mercury and Method 6010 for elemental metals. The Method of Standard Addition will be performed for each metal on one of the submitted samples per sampling event. The laboratory will be required to achieve the required or estimated detection limits as specified in EPA SW-846. If equivalent methods are used, this must be justified in advance. Approval for any equivalent methods employed by the laboratory will be at the discretion of Cannon AFB and NMED.

Soil samples will also be analyzed for soil moisture content, in accordance with ASTM D 2216.

7.2 QA/QC

For all tests, the samples will be spiked with known quantities of the hazardous constituent and spike concentration and percent recovery (PR) reported. The surrogate spike recoveries will be reported for all organic tests. Results from method blanks on the samples will be submitted. Blanks will not be subtracted. The method of how the reported lower detectable limit was determined must also be reported. To ensure that the established data quality objectives (DQOs) can be attained, the level of analytical quality

achieved will be at least Level III. One set of samples (samples collected in any one day or one sample package) per year will undergo the more rigorous QA/QC to ensure data of Level IV data quality. The laboratory will report data equivalent to Contract Laboratory Program (CLP) Routine Analytical Services deliverables. Data will be sufficiently documented to allow personnel to review and evaluate data quality. Other samples sent for that year will be tested by the same analytical methods, but will require less QA/QC and reporting requirements to achieve Level III data quality. Quick turn-around time on the Level III data will allow Cannon AFB to determine whether, based on the results, the OD treatment process is affecting the environment.

7.3 Sampling DQOS

DQOs are quantitative and qualitative statements specified to ensure that data of known and appropriate quality are obtained during sampling. The overall objective of sampling is to provide an accurate, precise, and representative confirmation that the OD unit treatment process is not contaminating surrounding soils above RCRA action or background levels. DQOs will be followed in terms of precision, accuracy, representativeness, completeness, and comparability (PARCC). The PARCC parameters indicate data quality. The procedures described in this section are designed to obtain PARCC for each sampling and analytical method and analysis.

7.3.1 Precision

Precision is a measure or estimate of the reproducibility of measurements under a given set of conditions. Specifically, precision is a qualitative measure of the variability of a group of measurements compared to their average value. A simple measure of precision is the standard deviation. The methods and protocols found in the most recent version of EPA SW-846 will be used by the laboratory performing the sample analyses.

The overall precision of measurement data is a mixture of sampling and analytical factors. The objective for precision in the chosen laboratory for certain samples is to equal the precision demonstrated for the CLP methods on similar samples. Laboratories commonly determine precision from duplicate samples; thus, precision is usually expressed as relative percent difference (RPD). The calculation for RPD is:

$$RPD = \frac{V1 - V2}{(V1 + V2) \div 2 \times 100} \qquad (2)$$

where V1 and V2 are the reported concentrations for each duplicate sample.

7.3.2 Accuracy

Accuracy is the ability to obtain a true value. The accuracy of an entire measurement system indicates any bias that exists; this is generally difficult to measure through the entire data collection process, since there are potentially many sources of error. These include the sampling process, field and laboratory cross contamination, preservation, handling, sample matrix, sample preparation, and analytical techniques. Sampling accuracy can be assessed by evaluating the results of field blanks; analytical accuracy, through the use of known and unknown QC samples and matrix spiked samples.

Laboratory accuracy is checked by adding a known amount of surrogate compounds (compounds unlikely to be found in actual samples) to a sample and ensuring that amount is recovered in the analysis. This process is referred to as spiking, and the samples are referred to as spikes. The objective for accuracy in the chosen laboratory for certain samples is to equal the accuracy demonstrated for the CLP methods on similar samples being analyzed for similar concentrations of contaminants. Laboratory accuracy is expressed as PR, calculated by:

$$PR = \frac{Ss - So}{Sa \times 100} \qquad (3)$$

where So is the background value obtained by analyzing the sample (before the spike is added), Sa is the concentration of the spike added to the sample, and Ss is the value obtained by analyzing the sample after the spike has been added.

7.3.3 Representativeness

Representativeness expresses the degree to which sample data accurately and precisely represent a characteristic of a population, parameter variations at a sampling point, or an environmental condition. Representativeness is a qualitative parameter most concerned with the proper design of the sampling program. The representativeness criterion is satisfied by carefully selecting sample locations, sampling techniques, and analytical techniques and collecting a sufficient number of samples. Adherence to this SAP will ensure that sufficient representativeness has been achieved.

7.3.4 Completeness

Completeness is a measure of the amount of data actually obtained as compared to the amount planned to be obtained. Situations sometimes arise in the field and the laboratory that may deter the progress of an investigation. Technical difficulties are sometimes encountered both in the field and in the laboratory.

Completeness is recorded in the laboratory by comparing the number of theoretically obtainable results under ideal conditions to the actual number of valid results obtained. CLP data has been found to be 80 to 85% complete (PC) on a nationwide basis; therefore, the completeness goal for this sampling effort is 80%. The PC is calculated by:

$$PC = \frac{Na}{Ni \times 100} \tag{4}$$

where Na is the actual number of valid results obtained and Ni is the number of results that may have been obtained under ideal conditions.

7.3.5 Comparability

Comparability reflects the confidence with which data sets can be compared to each other. This is accomplished through using standard sampling techniques for all sampling events and standard analyzing techniques for all samples. Comparability is limited

to the precision and accuracy parameters of PARCC, because only when these parameters are known can data sets be compared with confidence.

7.4 Sample Return or Disposal

Unless directed otherwise by Cannon AFB, the laboratory will dispose of all soil samples following analysis. The laboratory will provide certification that its facilities qualify for the exemption in 40 CFR 261.4(d), which excludes waste samples from many hazardous waste management requirements. In addition, all laboratories will provide the base with an explanation of the disposal practices used with respect to sample residual.

8.0 STATISTICAL ANALYSIS

Since contaminant populations of a weapons testing site are generally stratified, one cannot conclude that the entire population is normally distributed. It is necessary to divide this population into subpopulations that are non-overlapping groups, called strata. For this site we have initially designated these strata as A, B, C. Each stratum is assumed to be homogenous within itself thus yielding a normally distributed subpopulation. Together, these sub-populations comprise the whole population. When expressed mathematically, the basic ideas underlying stratified random sampling are:

- The total number of population units, N, is divided into L non-overlapping groups of population units. These groups are called strata (i.e., concentric rings around a detonation site). The number of population units in strata 1, 2, 3, ..., L are N_1, N_2, ..., N_L, respectively, where $N_1 + N_2 + \ldots, + N_L = N$.

- The N_1, N_2,...N_L, are known constants, i.e., the sizes of strata are known.

- A simple random sample is drawn from each strata independently. The size of the sample in the hth stratum is n_h, and $n = n_1 + n_2 + \ldots + n_L$ is the total sample size over all L strata.

8.1 Preliminary Sample Calculations

The analytical results from the preliminary soil sampling need to have the following statistical calculations performed for each analyte found in strata A,B,C above detection limits:

- Calculate the sample mean (i.e., strata mean)

$$\overline{X_h} = \sum_{i=1}^{n} \frac{X_i}{n} \qquad (5)$$

where X_i is the concentration, n is the number of samples in Stratum H, and h is the stratum.

- Next calculate the sample variance

$$S_h^2 = \sum_{i=1}^{n} \frac{\left(X_i - \bar{X}_h\right)^2}{n - 1} \tag{6}$$

where X_i is the concentration, $\bar{X}_h$ is the sample mean in Stratum H, and n is the number of samples in Stratum H

- Next calculate the standard deviation

$$S_h = \sqrt{S_h^2} \tag{7}$$

Calculate n_0 using equation 1. Then calculate n for your population based on the calculated n_0. The equation for n is given below:

$$n = \frac{n_0}{1 + \frac{n_0}{N}} \tag{8}$$

where n_o is the calculated initial sample size, and N is the number of population units.

Additional sampling will need to be performed as defined above, proportionally in each stratum (i.e., nW_h). Then the calculations in Section 8.2 should be completed.

8.2 Routine Sample Calculations

- Calculate the sample mean (i.e., strata mean)

$$\bar{X}_h = \sum_{i=1}^{n} \frac{X_i}{n} \tag{9}$$

where X_i is the concentration, n is the number of samples in Stratum H, and h is the stratum.

- Next, calculate the sample variance

$$S_h^2 = \sum_{i=1}^{n} \frac{\left(X_i - \bar{X}_h\right)^2}{n - 1} \tag{10}$$

where X_i is the concentration, $\bar{X}_h$ is the sample mean in Stratum H, and n is the number of samples in Stratum H.

- Next calculate the standard deviation

$$S_h = \sqrt{S_h^2} \tag{11}$$

- Next define stratum areas

$$A_a = \Pi r_a^2 \ , \quad A_b = \Pi r_b^2 - \Pi r_a^2 \ , \quad A_c = \Pi r_c^2 - \Pi r_b^2 \tag{12}$$

where Πr^2 is the area for a circle, r_a is the radius of Stratum A from GZ, r_b is the radius of Stratum B from GZ, and r_c is the radius of Stratum C from GZ.

- Next define stratum weights

$$W_a = \frac{A_a}{\Pi r_c^2} \ , \quad W_b = \frac{A_b}{\Pi r_c^2} \ , \quad W_c = \frac{A_c}{\Pi r_c^2} \tag{13}$$

where Πr^2_c is the total sampling area.

- The next step is to estimate the true mean for the population

$$\overline{X_{st}} = \sum_{h=1}^{L} W_h \overline{X_h} \tag{14}$$

where $\bar{X}_{st}$ is the true mean for the stratified population, W_h is the stratum weight for Stratum H, and $\bar{X}_h$ is the mean for Stratum H.

- Next, calculate the variance for the population, assuming measurement errors are negligible

$$S^2\left(\overline{X_{st}}\right) = \sum_{h=1}^{L} \frac{W_h^2 S_h^2}{n_h} - \sum_{h=1}^{L} \frac{W_h^2 S_h^2}{N} \tag{15}$$

where n_h is the number of samples in Stratum H.

- Next, calculate the standard deviation for the population

$$S\left(\overline{X_{st}}\right) = \sqrt{S^2\left(\overline{X_{st}}\right)} \tag{16}$$

Then if the n_h are sufficiently large, $100(1-\alpha)\%$ confidence limits on the true mean over all strata are computed as

$$\overline{X}_{st} \pm Z_{(\alpha/2)}\, S\left(\overline{X}_{st}\right) \tag{17}$$

where $Z_{\alpha/2}$ is the standard normal distribution value that cuts off $100(\alpha/2)\%$ of each tail of the normal distribution, e.g., 99% confidence interval would have a corresponding $Z_{\alpha/2}$ value of 2.58. If the n_h are small an alternative procedure for computing limits is to use the t-value from the tables of Student's *t* instead of from the normal table (Cochran 1963, p.94).

9.0 DATA RESOLUTION AND REMEDIAL RESPONSE

All data results from routine (i.e., quarterly) sampling activities will be statistically evaluated as prescribed in Section 8 to determine if a significant increase over the concentrations limits for any of the specified hazardous constituents in Table 9-1 has occurred. The action levels that will be used for monitoring are either calculated values or background upper threshold limits, which will be determined from soil sampling site baseline study (planned for the March–April 1994 period—analytical results generated from this activity should be available for submittal to NMED by June 1994). The analytes that will have background concentrations as action levels include arsenic, beryllium, cadmium, and chromium (VI). The rationale for using background levels for these particular toxic metals is because the background concentrations determined in 1993 for these contaminants approached or exceeded the calculated levels in Table 9-1. Therefore, calculated action levels would be inappropriate. Action levels were calculated for most of the constituents for soil using the methodology prescribed in the proposed RCRA Subpart S regulations, "Appendix D: Recommended Exposures Assumptions for Use in Deriving Action Levels" and "Appendix E: Examples of Calculations of Action Levels." These calculated soil action levels are for the analytes being tested at Melrose AFR.

In the event that soil sampling statistically determines (i.e., determine through a statistical evaluation, which may include simple comparison to the action level), that any concentration limit of those hazardous constituents listed in Table 9-1 is exceeded at any sampling point, the sampling point will be immediately resampled to confirm the presence of contamination. If such sampling confirms that there is contamination, then additional sampling will be performed to account for potential migration of waste constituents. For instance, if contamination is found at surface, additional sampling would be performed to an appropriate depth until no contamination is found. In any event where contamination is confirmed, such an occurrence will be noted, NMED will be duly notified in writing, and a report describing the occurrence will be submitted to NMED within seven days of the sample confirmation.

Table 9-1

Calculated Risk-Based Action Levels for Soils

Constituent	Carcinogenic Class[a]	Reference Dose (RfD)	Carcinogenic Slope Factor (CSF)[b]	Source[c]	Calculated Soil Action Level (mg/kg)[d]	
					Carcinogenic	Noncarcinogenic
Toxic Metals						
Antimony	NA[e]	4.00×10^{-4}	—	IRIS	—	$3.2 \times 10^{+1}$
Arsenic	A	3.00×10^{-4}	$5.00 \times 10^{+1}$	IRIS	1.4×10^{-2}[f]	—
Barium	NA	7.00×10^{-2}	—	IRIS	—	$5.6 \times 10^{+3}$
Beryllium	B2	5.00×10^{-3}	$4.30 \times 10^{+0}$	IRIS	1.63×10^{-1}[f]	$4.00 \times 10^{+2}$
Cadmium	B1	5.00×10^{-4}	$6.10 \times 10^{+0}$	IRIS	1.14×10^{-1}[f]	—
Chromium (III)	NA	$1.00 \times 10^{+0}$	—	IRIS	—	$8.00 \times 10^{+4}$
Chromium (VI)	A	5.00×10^{-3}	$4.10 \times 10^{+1}$	IRIS	1.7×10^{-2}[f]	—
Copper	NA	4.0×10^{-10}[g]	—		—	$3.2 \times 10^{+3}$
Lead	B2	NA	—		—	$5.0 \times 10^{+2}$[h]
Mercury	D	3.00×10^{-4}	—	IRIS	—	$2.4 \times 10^{+1}$
Nickel	D	2.00×10^{-2}	—	IRIS	—	$1.6 \times 10^{+3}$
Selenium	D	5.00×10^{-3}	—	IRIS	—	$4.00 \times 10^{+2}$
Silver	D	5.00×10^{-3}	—	IRIS	—	$4.00 \times 10^{+2}$
Explosive Compounds						
HMX	D	5.00×10^{-2}	—	IRIS/EPA Office of Water	—	$5.00 \times 10^{+3}$
RDX	C	3.00×10^{-3}	1.10×10^{-1}	IRIS/EPA Office of Water	$6.4 \times 10^{+1}$	—
1,3,5-Trinitrobenzene (1,3,5-TNB)	NA	5.00×10^{-5}	—	IRIS	—	$4.00 \times 10^{+0}$
1,3-Dinitrobenzene (1,3-DNB)	D	1.00×10^{-4}	—	IRIS	—	$8.00 \times 10^{+0}$
Tetryl	NA	1.00×10^{-2}	—	IRIS	—	$8.00 \times 10^{+2}$
Nitrobenzene (NB)	D	5.00×10^{-4}	—	IRIS	—	$4.00 \times 10^{+1}$
2,4,6-Trinitrotoluene (2,4,6-TNT)	C	5.00×10^{-4}	3.00×10^{-2}	Burrows, 1989[i]	$2.33 \times 10^{+2}$	—
2,4-Dinitrotoluene (2,4-DNT)	B2	2.00×10^{-3}	6.80×10^{-1}	IRIS	$1.03 \times 10^{+0}$	—

Table 9-1

(Continued)

Constituent	Carcinogenic Class[a]	Reference Dose (RfD)	Carcinogenic Slope Factor (CSF)[b]	Source[c]	Calculated Soil Action Level (mg/kg)[d]	
					Carcinogenic	Noncarcinogenic
2,6-Dinitrotoluene (2,6-DNT)	B2	1.00×10^{-3}	6.80×10^{-1}	IRIS	$1.03 \times 10^{+0}$	—
2-Nitrotoluene (2-NT)	NA	1.00×10^{-2}	—	IRIS	—	$8.00 \times 10^{+2}$
3-Nitrotoluene (3-NT)	NA	1.00×10^{-2}	—	IRIS	—	$8.00 \times 10^{+2}$
4-Nitrotoluene (4-NT)	NA	1.00×10^{-2}	—	IRIS	—	$8.00 \times 10^{+2}$

[a]The Human Health Assessment Group of the EPA classifies chemicals into one of the following groups:

Group A - Human carcinogen (sufficient evidence of carcinogenicity in humans)

Group B - Probable human carcinogen (B1 - limited evidence of carcinogenicity in humans; B2 - sufficient evidence of carcinogenicity in animals with inadequate or lack of evidence in humans).

Group C - Possible human carcinogen (limited evidence of carcinogenicity in animals and inadequate or lack of human data).

Group D - Not classifiable as to human carcinogenicity (inadequate or no evidence).

Group E - Evidence of noncarcinogenicity for humans (no evidence of carcinogenicity in adequate studies).

[b]Human risk is assumed to be via oral ingestion, where oral doses are all assumed to be chronic. In certain cases where there was no published (carcinogenic) oral slope factor for the constituent, the inhalation slope factor (which for many chemicals is the same as the oral slope factor) was used.

[c]Values cited for the RfD and the CSF were obtained from the June 1993 toxicity values from EPA's Integrated Risk Assessment System (IRIS) and Health Effects Assessment Summary Table (HEAST), unless otherwise noted.

[d]The methodology for performing the calculations of action levels are those referenced in Section 9 of the SAP.

[e]Carcinogenic classes designated as NA means that the criteria is not applicable (i.e., not classifiable) because the chemical is not currently considered a human carcinogen. NA and D group are similar designations.

[f]The action levels presented for these metals are for information purposes only. Background concentrations determined during the initial site characterization study approached or exceeded the calculated levels in this table. Therefore, background threshold limits to be determined during the follow-up site characterization effort will be provided.

[g]Reference dose (RfD) for copper is derived from its secondary maximum contaminant limit (1.3 mg/L).

[h]There is no published RfD for lead. The action level is based on guidance in OSWER Directive 9355.4-02 *Interim Guidance on Establishing Soil Cleanup Levels at Superfund Sites*, September 7, 1989.

[i]This source references the 1989 report (Burrows, Rosenblatt, Mitchell, and Parmer) *Organic Explosives and Related Compounds: Environmental and Health Considerations*, Technical Report 8901, U.S Army Medical Bioengineering Research and Development Laboratory, Fort Detrick, Maryland.

Remediation of soils will be conducted if confirmatory soil sampling indicates soil is contaminated with any of the hazardous constituents listed in Table 9-1 with levels above action levels or determined to be widespread over the OD site. Such remediation would constitute an interim measure coordinated with NMED to help minimize the potential spread of contamination and keep the facility uncontaminated. The remediation will be conducted by a properly qualified contractor in proper protective equipment (depending upon sample results). The actual equipment used will be based on the extent of the contamination. If remediation is necessary, simple work and safety plans will be developed to provide guidelines for this interim remediation. Remediated soil will be drummed and disposed of through Defense Reutilization and Marketing Office as a waste based on the sampling results.

10.0 REFERENCES

1. New Mexico Environmental Department, Hazardous and Radioactive Materials Bureau. "Notice of Deficiency Comments for Melrose Air Force Range RCRA Operating Permit." December 22, 1992, Santa Fe, New Mexico.

2. U.S. Environmental Protection Agency (EPA) November 1986. Test Methods for Evaluating Solid Waste, SW-846, 3rd Edition, Office of Solid Waste and Emergency Response, Washington, D.C.

3. Tran-Stat, Statistics for Environmental Studies, Battelle Memorial Institute, August 1983, Number 24, Chapter 4.

4. Elementary Survey Sampling, William Mendenhall et al., 1971, pgs. 53-64.

5. Sampling Techniques, William G. Cochran, 1963, pgs. 87-153.

Final 1/3/94

M E M O R A N D U M

TO: TOM TATKIN, RCRA PERMITTING SECTION

FROM: LW LEE WINN, RCRA TECHNICAL COMPLIANCE PROGRAM

DATE: DECEMBER 30, 1993

RE: **TECHNICAL REVIEW OF THE APPENDIX C1-4 SAMPLING AND ANALYSIS PLAN FOR THE MELROSE AIR FORCE RANGE OPEN DETONATION AREA AND APPENDIX E1-1 GEOLOGY AND ANALYTICAL RESULTS FOR SOILS AT THE OPEN BURN/OPEN DETONATION THERMAL TREATMENT FACILITY**

The Technical Compliance Program was requested by the Permitting Program to do a review and provide comments upon the Appendix C1-4: Sampling and Analysis Plan for the Melrose Air Force Range OD Area and Appendix E1-1: Geology and Analytical Results for Soils at the Open Burn/Open Detonation Thermal Treatment Facility. As a result of the review, the following are the apparent technical deficiencies with these Appendices. Items are referenced by item number, document section, page, and paragraph if applicable. All language taken directly from the document is represent in bold lettering, following are HRMB Technical Compliance Program comments.

Appendix C1-4: Sampling and Analysis Plan for the Melrose Air Force Range OD Area

ITEM REFERENCE AND COMMENT

1. Section 3.1, page 2, paragraph 1. **It is estimated that only three discrete samples from the OD area will be sufficient (see Attachment A).** COMMENT: Attachment A is not included with the submittal.

2. Section 3.1, page 2 paragraph 1. **This is based on historical data and the EPA SW-846 method for determining the appropriate number of samples to be collected.** COMMENT: The procedure used to determine the appropriate number of samples must be described in detail.

3. Section 3.1, page 2, paragraph 1. **The historical background data consists of 20 samples and the analytical results of these samples varied only slightly (Appendix E); therefore, only a minimum of three samples are needed to accurately represent the effectiveness of treatment operations of the OD unit.** COMMENT: A review of the referenced Appendix E is

provided under separate heading below. Please provide the rationale for a minimum of three samples. A minimum of three samples to accurately represent the effectiveness of treatment seems unacceptable. See comments for section 4 below.

4. Section 3.2, page 2, paragraph 1, **Soil samples will be analyzed for all elemental metals, including priority pollutant metals, listed in the New Mexico Hazardous Waste Management Regulations-7 (NMHWMR-7), Part V, Appendix IX for explosive residues.** COMMENT: Because of the uncertainty of what has been burned or detonated here historically, Melrose Air Force Range **(MAFR)** should conduct an investigation of all constituents of concern as part of an inclusive waste characterization process (see comment for item #5 below).

5. Section 3.3, page 3, paragraph 1, **Therefore, the emphasis of the sampling and analysis should be to search only for those constituents present in these waste...Any further investigations should be addressed during closure of the unit, and only if appropriate at that time.** COMMENT: It seems as if waste characterization at the site has not been completed. The proposed approach assumes there is a complete knowledge of process which defines every constituent ever used here. HRMB appreciates that MAFR has a knowledge of process which should list every constituent ever used here. If that is the case MAFR should provide a list of these constituents. However, for public interest and because of discrepancies found in knowledge of process at other sites, it would be beneficial to verify this. Additionally, because MAFR is proposing to continue to operate this Open Detonation site, waste characterization is an important first step to determine what hazardous constituents are contaminants of concern here. This is not only important from a human health standpoint but because of ground water considerations.

   The waste characterization plan should investigate for any hazardous constituents found to any depth, concentration, and constituent mobility in the vadose zone. These physical characteristics will influence the decision to require a ground water sampling and analysis plan.

   Waste characterization should include all constituents of concern and include explosive residues, metals, and gross alpha/beta because of possible historically unknown practices at the site. Investigations should be performed using US EPA SW846 "Test Methods for Evaluating Solid Waste". Laboratory analytical methods should be used which have sufficiently low practical quantitation limits. All analytical concentration data between the method detection limit and the method quantitation limit should also be reported.

A description of how to characterize the contaminant source, the environmental setting, and the design of a monitoring program to characterize releases may be found in sections 9.0 through 9.4 of the RFI Guidance Volume II of IV, Soil, Ground Water and Subsurface Gas Releases, EPA 530/SW-89-031, May 1989, OSWER Directive 9502.00-6D.

6. Section 4, page 5, **Sampling Procedures and Methodology**, After an acceptable waste characterization plan is completed (NOTE: This does not preclude implementation of an acceptable waste characterization plan at closure), and screening action levels are calculated using Subpart S guidance then constituents of concern should be added to the list in Table 1 (page 4). Finally, if it is determined that ground water is not presently at risk, a sampling and analysis plan for the vadose zone using these constituents of concern may be acceptable.

   During the waste characterization phase, acceptable background determination for naturally occurring metals should be done. See comments on background determination under review of Appendix E1-1 below.

7. Section 4.1, page 5, paragraph 1, **If annual sampling is not immediately approved, then analysis will be performed on a quarterly basis for the first eight quarters of permitted OD operations. After these eight quarters, sampling will revert to an annual basis provided that no significant contamination, determined through statistical evaluation, is present at the OD area.** Sampling frequency should be quarterly for the first eight quarters and revert back to an annual basis provided that no significant contamination is detected. This sampling analytical data should be provided to HRMB as soon as practically possible.

8. Section 4.2, page 5, **Sample Location**, After a list of constituents of concern with appropriate screening action levels is derived as a result of the waste characterization process, MAFR should have outlined the known affected area of the site. Subsequently MAFR should determine sampling locations, approach, and number of samples to be collected during the active life of the site. The following is an outline of what may be part an acceptable sampling plan for the Open Detonation Site which MAFR may wish to consider in their plan: Sample locations should be conducted along eight equidistant radial lines. The length of the lines should be determined by the projected radius of the affected area and extend past it. A figure should be provided depicting this pattern. At each sampling point, a discrete soil sample will be collected at the surface and at 1-foot depth. The number

of samples per event should be based on a statistical sampling design using a probability based scheme. The probability scheme may include randomly generated distances from the shot point along the radial lines at intervals which provide a .01 percent confidence interval that these locations provide a representative sample. In addition, surface and one foot samples should be collected at the bottom of the detonation pit. All sample locations should be shown on a topographic map of the OD unit for all sampling events to be conducted.

If concentrations of the contaminants of concern exceed screening action levels, or are characteristically hazardous, then the area of concern will be investigated. Investigation may be performed by coring and discrete sampling at 5 feet intervals until the nature and extent of contamination has been characterized. After investigation, constituents should be remediated or removed until there are no longer concentrations above screening action levels as part of a contingency plan. If concentrations of the contaminants which exceed screening action levels at a depth greater than 50 feet, then not only will it be necessary to remove this contamination but a ground-water monitoring system should be installed and an approved ground-water sampling and analysis plan be implemented. (NOTE: At closure a Superfund type Risk Characterization should be completed which addresses present and future land use, receptors, and all exposure pathways.)

9. Section 4.6, page 9, **Health and Safety Procedures,** Personnel performing sampling activities should be familiar with the Site Specific Health and Safety plan and should be instructed by the Site Safety Officer as to hazards present and protective equipment necessary.

APPENDIX E1-1: GEOLOGY AND ANALYTICAL RESULTS FOR SOILS AT THE OPEN BURN/OPEN DETONATION THERMAL TREATMENT FACILITY

ITEM REFERENCE AND COMMENT

1. Section 2.2.1, page 9, paragraph 3. **One additional 20-foot boring was drilled 200 feet west of the outer perimeter of the site to determine background. The rationale for the location chosen for the background sample was the predominantly westerly wind and the eastward-dipping alluvial sediments at this location, which provided an updip and upwind location for background samples. The 20-foot borings were sampled at 0, 5, and 10 feet for metals and explosive residue.** COMMENTS: Please provide a wind rose diagram based on wind direction measurements for one year's duration to verify the prevailing wind directions and velocities. MAFR should provide a

topographic map to verify the topographically high location of background borings.

RFI Guidance Volume II of IV, Soil, Groundwater and subsurface gas releases, EPA 530/SW-89-031, May 1989, OSWER Directive 9502.00-6D, page 9-19 states that because this is a non-point source unit in that airborne particles of contamination are released, the first step should be to determine the area in which the release is limited. Therefore, one objective of release characterization should focus on determining the boundaries of the contaminated area. How was it determined that 200 feet west of the OD site would be free of contamination?

Additionally, "Non-point type releases to soil may also result from deposition of particles carried in the air... Such releases generally have a characteristic distribution with concentrations often decreasing logarithmically away from the source and generally having low variability within a small area. The highest contaminant concentrations tend to follow the prevailing wind directions." MAFR should consider air borne particles in the down wind direction when outlining the affected area.

RFI Guidance Volume II of IV, Soil, Groundwater and subsurface gas releases, EPA 530/SW-89-031, May 1989, OSWER Directive 9502.00-6D, page 9-44 states:

> "Background soil samples should be taken from **areas** that are not near a suspected source of contamination and from the same **stratigraphic layer** as the study area samples, if possible. Selection and sampling of appropriate background areas may be important because verification of a release in a contaminated area may involve a comparison of study and background concentrations."

Please construct cross sections and determine concentrations of naturally occurring metals at five foot intervals to a depth of 50 feet. The reasoning for this is that in determining if a release has occurred as described under comments for item number 8 above then background concentrations for these metals at each five foot interval should be determined in advance. These corings should be taken outside the affected zone. The number of samples for each five foot zone should be determined to be representative to a .01 percent confidence level.

2. Section 2.2.2, pages 9-15, Site Geology, Because MAFR has drilled and completed a well in the perched aquifer, this well should be sampled for complete appendix IX constituents.

3. Section 2.2.3, page 15, **Analytical results and comparison to action levels.**

   a. According to the January 1993 submittal "USAF Work Plan and Sampling and Analysis Plan Open Burn/Open Detonation Thermal Treatment Facility Melrose Air Force Range, New Mexico": Work Plan Section 2.3, page 14. **RCRA action levels for soil and air have been adopted for this investigation and are given in Appendix A.** Appendix A screening action levels are only examples. The list does not include all hazardous constituents. These should be calculated using the currently acceptable toxicological data listed in IRIS, HEAST, or other available EPA sources.

   b. Once an acceptable waste characterization plan has been implemented, analytical results as in this Appendix E report should be tabulated such that results for each constituent are given for each clearly labeled sample location and depth.

GENERAL COMMENT: MAFR should include Mercury, Cobalt, and Copper in their background metal investigation.

cc Steve Alexander, RCRA Technical Compliance Program
MAFR File
Barbara Hoditscheck, Program Manager, RCRA Permits

File:S&AOBOD

A. APPLICATION

A-1 INTRODUCTION

This permit application is for the Cannon Air Force Base (AFB)/Melrose Air Force Range (AFR) open detonation (OD) area. The permit application was prepared for submission to the New Mexico Environmental Department (NMED), Hazardous and Radioactive Materials Bureau, to meet all applicable requirements of the New Mexico Hazardous Waste Management Regulations, Revision 7 (NMHWMR-7), which were promulgated under the New Mexico Hazardous Waste Act. [These regulations incorporated, by reference, U.S. EPA rules promulgated pursuant to the Resource Conservation and Recovery Act (RCRA) including those relating to Part B applications (Subpart X Miscellaneous Units)].

This permit application will allow Cannon AFB/Melrose AFR to continue on-site OD treatment of obsolete or unserviceable, conventional or off-specification munitions generated by Cannon AFB in support of its U.S. Air Force (USAF) mission. Cannon AFB is not seeking a permit for open burning (OB) of waste munitions at this time. Should Cannon AFB elect to open burn wastes, it will apply for a class 3 permit modification. Both Part A and Part B of this permit application for the OD unit are enclosed in this one document to fully establish all necessary permitting requirements.

The Explosive Ordnance Flight is responsible for day-to-day operations of the OD area and provides extensive training to personnel involved in storing, handling, and treating of waste munitions. Cannon AFB currently has no existing arrangements with alternate treatment facilities that could accommodate Cannon AFB's unserviceable munitions. Thus, the permitting of the OD unit at the Melrose range will ensure that Cannon AFB can continue its mission as a vital USAF installation and will eliminate the need and expense of finding alternate treatment facilities that can handle the Base's explosive munitions. It will also eliminate the need for transport of explosive wastes on public roads to alternate treatment facilities.

A-2 EPA APPLICATION FORM

Appendix A includes a copy of the 24 February 1994 Part A application covering the OD unit at Melrose AFR. The Melrose AFR is owned by the U.S. Department of Defense (DoD) and is operated under contract by Westar Corporation, which also provides day-to-day maintenance of the OD area further described in this application. Westar Corporation is not involved with the operation of the OD unit, only to maintain the unit according to the design parameters identified in Sect. D.

The commander in charge at Cannon AFB is currently Colonel Lance L. Smith, USAF. Design diagrams and maps are included in the application as required by NMHWMR-7.

APPENDIX C1-5
AIR FORCE SUPPLY FORMS

APPENDIX C1-5
AIR FORCE FORMS

AIR FORCE FORM 191

AMMUNITION DISPOSITION REQUEST FORM

★U.S.GPO:1985-0-495-453/4055

AMMUNITION DISPOSITION REQUEST

AF STOCK RECORD ACCT NO	ADR NO.	VOUCHER NO.

1

TO:	FROM:

FEDERAL STOCK NUMBER	NOMENCLATURE

LOT NO OR SERIAL NO	QUANTITY IN LOT	NO. INSPECTED	NO UNSVC	DATE MFTR	COND CODE	UNIT COST	TOTAL COST
TOTAL QUANTITY						**TOTAL COST**	

REASONS FOR REPORTING *(Description of unserviceable, excess serviceable, obsolete or dangerous condition. Include inspection details, sample size, No. of defective units and type of defect.)*

CLASSIFICATION	FACILITIES AVAILABLE FOR	OTHER FACILITIES *(specify)*
☐ OBSOLETE ☐ UNSERVICEABLE ☐ DANGEROUS ☐ EXCESS SERVICEABLE	☐ LOCAL DESTRUCTION ☐ LOCAL RENOVATION ☐ DEMILITARIZATION	

DATE	TYPE NAME, GRADE AND TITLE	SIGNATURE

2

FOR INTERMEDIATE COMMAND COORDINATION *(if required)*

TO:	FROM:	CONCUR YES	CONCUR NO

DATE	TYPE NAME, GRADE AND TITLE	SIGNATURE

TO:	FROM:	CONCUR YES	CONCUR NO

DATE	TYPE NAME, GRADE AND TITLE	SIGNATURE

3

DISPOSITION INSTRUCTIONS

TO:	FROM:

INSTRUCTIONS

	TYPE NAME, GRADE AND TITLE	SIGNATURE

4

COMPLETED ACTION BY INITIATING ACTIVITY

TO:	FROM:

The above authorized work has been completed.

DATE	TYPE NAME, GRADE AND TITLE	SIGNATURE

APPENDIX C1-5
AIR FORCE FORMS

DEPARTMENT OF DEFENSE FORM 1348-1

DOD SINGLE LINE ITEM RELEASE/RECEIPT DOCUMENT

DOC. IDENT. | RI FROM | M&S | STOCK NUMBER: FSC, NIIN, ADD | UNIT OF ISSUE | QUANTITY | DOCUMENT NUMBER: SERV, REQUISITIONER, DATE, SERIAL | SUFFIX | SERV | SUPPLEMENTARY ADDRESS | SIGNAL | FUND | DISTRIBUTION | PROJECT | PRIORITY | REQ'D DEL DATE | ADVICE | RI | UNIT PRICE: DOLLARS, CTS

SHIPPED FROM (A) | SHIP TO (B) | MARK FOR (C) | PROJECT (D) | TOTAL PRICE: DOLLARS, CTS (E)

WAREHOUSE LOCATION (F) | TYPE OF CARGO (G) | UNIT PACK (H) | UNIT WEIGHT (I) | UNIT CUBE (J) | U.F.C. (K) | NMFC (L) | FREIGHT RATE (M) | (N) | DOCUMENT DATE (O) | MAT COND (P) | QUANTITY (Q) | (R) | (S)

SUBSTITUTE DATA (ITEM ORIGINALLY REQUESTED) (T) | FREIGHT CLASSIFICATION NOMENCLATURE (U) | (V)

(W) | ITEM NOMENCLATURE (X) | (Y)

SHIPPERS USE: SELECTED BY AND DATE (1) | TYPE OF CONTAINER(S) (2) | TOTAL WEIGHT (3)

PACKED BY AND DATE (4) | NO. OF CONTAINERS (5) | TOTAL CUBE (6)

RECEIVERS USE: RECEIVED BY AND DATE (7) | INSPECTED BY AND DATE (8)

WAREHOUSED BY AND DATE (9) | WAREHOUSE LOCATION (10)

REMARKS: (AA) | (BB) | (CC) | (DD) | (EE)

FIRST DESTINATION ADDRESS (11) | DATE SHIPPED (12) | (FF) | (GG)

13 TRANSPORTATION CHARGEABLE TO | 14 B/LADING, AWB, OR RECEIVER'S SIGNATURE (AND DATE) | 15 RECEIVER'S DOCUMENT NUMBER

DD FORM 1348-1 (6 PT) 1 MAR 74 — DOD SINGLE LINE ITEM RELEASE/RECEIPT DOCUMENT

APPENDIX C1-5
AIR FORCE FORMS

AIR FORCE FORM 2005

ISSUE AND TURN-IN DOCUMENT

ISSUE/TURN-IN REQUEST

TRIC (1 2 3) | DEL DEBT TOTE BOX (4 5 6) | EX DAC (7)

A. INCHECKER, NAME, DATE (TIN)

REQUESTER, TIME & DATE (ISU)

B. INSPECTOR, NAME-STAMP, DATE (TIN)

STOCK NUMBER: NSC (8 9 10 11) | NIIN (12 13 14 15 16 17 18 19 20) | ADDN (21 22)

UNIT OF ISSUE (23 24) | QUANTITY (25 26 27 28 29)

C.

DOCUMENT NUMBER: ACT (30) | ORG (31 32 33) | SHOP (34 35) | DATE (36 37 38 39) | SER. NO. (40 41 42 43) | DMD COND (44)

PART NUMBER

D. PART NUMBER/MGFR CODE OR NAME/REMARKS

E. T.O. REFERENCE/TECHNICAL PUBLICATION OR END-ITEM APPLICATION/NEXT HIGHER ASSEMBLY

WORK ORDER (45 46 47 48 49 50) | SHIP TO | TEX (51) | CONS (52) | FAC (53) | (54) | SD (55 56) | PROJECT (57 58 59) | PRI (60 61) | REQ DEL DATE AT (62 63 64) | UJC CY CODE (65) | DMD CODE (66) | MARK FOR DOCUMENT NUMBER POST/POST (67 68 69 70 71 72 73 74 75 76 77 78 79 80)

F. T.O. PSC AND/OR ERRC

G. TIME & DATE OF DELIVERY

H. DELIVERY TIME

I.

J. NOMENCLATURE

AF Form 2005, JUN 86 PREVIOUS EDITION WILL BE USED

*U.S. GPO: 76-975

APPENDIX D
PROCESS INFORMATION

APPENDIX D1-1
ITEMIZATION OF WASTE MUNITIONS DISPOSAL AT MELROSE AFR OD AREA

Table D1-1. Itemization of waste munitions treated at OD unit, Melrose AFR, during 1989

Nomenclature	Quantity	Net Explosive Weight per item (NEW)	Total NEW
Ring, Severance	1	.0047	.0047
Cartridge Assembly	6	.0001	.0006
Connector, Explosive TRNS XB3	2	.0010	.0020
SMDC Line	2	.0010	.0020
Severance Assembly (ERRC XB3)	1	.0047	.0047
CTG, Impulse ERRC XB3	2	.0008	.0016
CTG, Impulse ERRC XB3	2	.0008	.0016
CTG, Set Impulse ERRC XB3	4	.0008	.0032
Cartridge Impulse ERRC XB3	2	.0008	.0016
CTG, Actuated Init ERRC XB3	2	.0003	.0006
Cartridge, Impulse ARD 863-1	1	.0090	.009
CTG, Fire Ext (ERRC) XB3	1	.0009	.0018
CTG, CAL 22 Ball Long Rifle	2	.0003	.0006
SMDC	1	.0010	.001
Cartridge Impulse ARD 446-1	1	.0276	.0276
Cartridge Impulse CCU-11/B XB3	1	.1726	.1726
Chaff Package RR141B/AL XB3	8	.0004	.0032
CTG, Signal Practice Bomb	1	.0013	.0013
Fuze Bomb Practice M904E2	2	.1650	.330
F835 Fuze Bomb	14	.0008	.0112
F989L M905 TL FZ	14	.0150	.21
F387E M147 A/BSTR/T	18	.8800	15.84
F372L T45 A/BSTR/NS	18	.3900	7.02
F372L T45 A/BSTR/NS	1	.3900	.390
L43L RR119B/AL Flare	14	1.5	21
Z999 Severance Ring	1	.0047	.0047
M662L Cart Assembly	6	.0001	.0006

Table D1-1 (continued)

Nomenclature	Quantity	Net Explosive Weight per item (NEW)	Total NEW
UY93L F111 Connector	2	.0032	.0064
S057L SMDC LN 159B	2	.0010	.002
VY37L Severance Assembly	1	.0047	.0047
M507 CTG Impulse	2	.0090	.018
UY13 CTG Impulse	2	.0090	.018
M397 CTG Impulse	4	.0090	.036
M359 Cart Impulse	2	.0090	.018
M731 CTG Act Initr	2	.0276	.0552
TY16L Fire Ext Cart	1	.0009	.0009
M237L Fire Ext Cart	1	.0009	.0009
A086L .22 Cal Ball	2	.0003	.0006
SK73 Det Cord	1	.0010	.001
M187L Ard 446-1 CTG	1	.0276	.0276
M073L CCU-11/B CTG	1	.1726	.1726
CY74L RR141AL Chaff	8	.0004	.0032
F562L MK4 Hot Spot	1	.0013	.0013
F919E M904 Nose Fuze	2	.1650	.33
F387E M147 A/BSTR/T	1	.8800	.88
Cartridge, Fire Extinguisher	2	.0009	.0018
Cartridge Assembly	15	.0001	.0015
Cartridge Assembly	22	.0001	.0022
Cartridge, Fire Extinguisher	3	.0009	.0027
Chaff Package RR-14IE/AL XB3	6	.001	.006
Cartridge Impulse ARD 863-1	6	.0090	.054
M189L ARD 863-1 CTG	6	.0090	.054
Initiator, Instant	33	.0070	.231
CTG, 40 mm Practice XB3	4	.0008	.0032
Explosive Time Delay	2	.0013	.0026

Table D1-1 (continued)

Nomenclature	Quantity	Net Explosive Weight per item (NEW)	Total NEW
Flare, Infrared Counter RR119	12	1.5	18
Cartridge, Fire Extinguisher	1	.0009	.0009
Chaff Package RR-141/AL	23	.0004	.0092
CTG, Cal .22 Ball, Long Rifle	6	.0003	.0018
Chaff Package RR141/AL XB3	15	.0004	.006
Cartridge, Fire Extinguisher XB3	8	.0009	.0072
Cartridge, 20 mm, TP	1	.0861	.0861
Cartridge Impulse ARD 446-1	3	.0276	.0828
Cartridge Impulse ARD 863-1	1	.0090	.009
Chaff Package RR141/AL	14	.0004	.0056
Mixed Small Arms Ammo XB3	120	.0008	.096
CTG, 20 mm, TP, M55A2	1	.0861	.0861
Chaff Package RR141B/AL	1	.0004	.0004
Shielded Mild Detonating Cord	13	.0009	.0117
Adapter Booster, Tail M147 XB	60	.8800	52.8
Kit, Signal, Distress	58	.056	3.248
Chaff Package RR141 Inert XB3	1	.0000	.000
Cartridge, ARD 800-1 XB3	14	.0090	.126
Cartridge Assembly	4	.0001	.0004
Shielded Mild Detonating Cord	7	.0010	.007
Bomb, Practice MK 106 MOD 1	1	.0065	.0065
Chaff PKG RR141 B/AL Dummy Kit	2	.0013	.0026
Cartridge, Impulse ARD863-1	18	.0090	.162
Cartridge, Impulse ARD446-1	1	.0276	.0276
Cartridge, Fire Extinguisher	3	.0009	.0027
		Total NEW for all items	184.842

Source: 27 ABOS/AOE, Cannon AFB, New Mexico
Munitions Disposal Report.

Table D1-2. Itemization of waste munitions treated at OD unit, Melrose AFR, for 1990

Nomenclature	Quantity	Net Explosive Weight per item (NEW)(lb)	Total NEW
BDU-33 Practice	900	.0013	1.17
MK-106, Practice	100	.0013	.13
MK-4, Signals	50	.0013	.065
Chaff	50	.0004	.02
RR-119 ACFT Flare	390	1.5000	585
Fuse FMU-54	1	.0008	.0008
Cart., Impulse	55	.0007	.0385
A/C Cart	1	.0009	.0009
Explosive Kit, E	1	.1869	.1869
Explosive Kit, Separate	1	.1610	.161
Insulator, Cart	1	.0007	.0007
Transfer, Assembly	2	.0008	.0016
Insulator, Cart	2	.0007	.0014
Initiator, Propellant	1	.0022	.0022
Initiator, Propellant	1	.0018	.0018
Initiator, Delay	1	.0009	.0009
Explosive Kit	1	.0007	.0007
Cord Assem Det.	1	.0037	.0037
Cord Assem Det.	1	.0007	.0007
Initiator	1	.0059	.0059
Delay, Initiator	2	.0006	.0012
A/C Cart	15	.014	.21
Cart., Impulse	108	.108	11.664
Gas Generator	1	.906	.906
Cord Asmby	6	.004	.024
SMK Grenade, MK	1	.720	.72
Projo Simulator	1	.141	.141

Table D1-2 (continued)

Nomenclature	Quantity	Net Explosive Weight per item (NEW)(lb)	Total NEW
Small Arms Ammo	1572	.0003	.4716
Grenade Simulator	1	.081	.081
Signal Cart.	62	.207	12.834
M905 Fuse	3	.045	.135
M904 Fuse	2	.330	.66
RR-141 Chaff Cart	2	.001	.002
Adpt. Booster	1	.880	.88
Time Fuse	25	.135	3.375
C-4	20	1.25	25
Nonele Blasting Cap	2	.005	.010
BDU-33 Practice, MK4 Signals	171	.0013	.2223
MK-106, Practice, MK4 Signals	5	.0013	.0065
MK-4, Signals	4	.0013	.0052
Ground Burst Sim	6	.85	5.1
A/C Cart	2	.0018	.0036
Hand Grenade	2	.72	1.44
Impulse Cart	3	.003	.009
Reel Assem.	1	.0022	.0022
Impulse Cart	3	.018	.054
Impulse Cart	4	.064	.256
Det Cord	2	.0016	.0032
Det Cord Assem.	2	.0014	.0028
A/C Cartridge	1	.0009	.0009
Det Cord	2	.0008	.0016
Impulse Cart.	8	.0056	.0448
A/C Cord	3	.0027	.0081
A/C Cart.	1	.0009	.0009
Det. Cord Assem	1	.0008	.0008

Table D1-2 (continued)

Nomenclature	Quantity	Net Explosive Weight per item (NEW)(lb)	Total NEW
Rifle Cart.	6	.0246	.1476
Rifle Cart.	1	.0041	.0041
12 Gauge Shell	8	.0304	.2432
Rifle Cart.	1	.0064	.0064
Rifle Cart. Mag.	1	.0128	.28
Rifle Cart. M-1	1	.0021	.0021
Shot Shell 20	20	.058	1.16
Det Cord	30	7lb/1000ft	.21
Time Fuse	30	.305lb/50ft	.162
C-4	30	1.25	37.5
Blasting Caps	10	.270	2.7
RDU-48	2	.0026	.052
Initiator, 1010-4	2	.0070	.133
Initiator, 1007-4	28	.0066	.2772
Delay Ctg., 25 Sec.	1	.0005	.0005
.22 Cal Ball	3	.0003	.0009
Ctg, Booster	1	.0001	.0001
Initiator Delay 1 Sec	22	.0070	.154
Grenade, SMK Green M18	1	.7200	.72
Initiator Deal .30 Sec	2	.0031	.0062
Initiator Delay 1.0 Sec	10	.0070	.07
Simulator, Projectile, M115A2	1	.1410	.141
Sim, Grenade, Hand M116A1	1	.0813	.0813
CTG, 5.56MM Blank M300	1	.0011	.0011
CTG, 20 GA. Shotgun	32	.0350	1.12
Initiator Delay 1.0 Sec	4	.0070	.028
BPIR Gas Generator	1	.0069	.0069
5.56MM	848	.0011	.9328

Table D1-2 (continued)

Nomenclature	Quantity	Net Explosive Weight per item (NEW)(lb)	Total NEW
7.62 MM	687	.0067	4.603
Cartridge, Aircraft	1	.0009	.018
Fuse Pract M904	1	.1650	.165
Fuse, Bomb Tail 905	1	.0150	.015
Fuse, Bomb	1	.0006	.0006
Cartridge, Impulse	1	.0276	.0276
Cartridge, Chaff, Inf	2	.0000	0
Cable, Inertia Reel	1	.0000	0
Cartridge, Aircraft	1	.0009	.0009
Cartridge, Signal PR	61	.0602	3.612
Cord Assembly, Deton	4	.0008	.032
SMDC Line #1080	2	.0010	.002
ARD 863 Ctg.	9	.0090	.081
Adapter-Booster, 80M	1	.8800	.88
Cartridge, Impulse	4	.0276	.1104
Fuze, Bomb	2	.3600	.72
Cartridge, Aircraft	3	.0009	.027
Cartridge, Signal MK-4	1	.0602	.0602
Bomb, Practice BDU-33D	1	.0013	.0013
5.56 Cartridge Ball	1	.0041	.0041
BDU-33 Practice, MK4 Signals	170	.0013	.221
MK-106, Practice, MK4 Signals	12	.0013	.0156
MK-4, Signals	13	.0013	.0169
BDU-48	4	.0013	.0052
Time Fuze	25	.305/50ft	.076
C-4	50	1.25	62.5
Nonele Blasting Cap	2	0.005	.010
		Total NEW for all items	771.586

Table D1-3. Itemization of waste munitions treated at OD unit, Melrose AFR during 1991

Nomenclature	Quantity	Net Explosive Weight per item (NEW)	Total NEW
BDU-33 Practice, MK4 Signals	246	.0013	.3198
MK-106, Practice, MK4 Signals	24	.0013	.0312
MK-4, Signals	5	.0013	.0065
Initiator, 1010-4	83	.0070	.581
MK13 Modo, Signal	1	.2120	.212
M115A1 Simulator	2	.1410	.285
Cart, 1 Sec	13	.0005	.0065
Cart, 25 Sec	19	.0005	.0095
.38 Cal Ball	1	.0008	.0008
.22 Cal Ball	68	.0003	.0204
5.56MM Blank	8	.0011	.0088
Cart Booster	1	.0001	.0001
Initiator, Delay	3	.0022	.0066
Initiator, Delay	7	.0007	.0049
Starter Cart, MXD-4	1	8.000	8
Manifold Cover	2	.0670	.134
Initiator Assy	1	.0006	.0006
Det Cord Assy	2	.0008	.0016
Det Cord Assy	2	.0012	.0024
Det Cord Assy	2	.0006	.0012
Det Cord Assy	1	.0009	.0009
Manifold Cover	3	.0007	.0021
Fire Ext. Cart.	5	.0009	.0045
Impulse Cart.	2	.0010	.002
Initiator	2	.0069	.138
Initiator	4	.0030	.012

Table D1-3 (continued)

Nomenclature	Quantity	Net Explosive Weight per item (NEW)	Total NEW
Hand Grenade	1	.7200	.72
Det Cord Assy	1	.0007	.0007
Det Cord Assy	5	.0008	.004
Det Cord Assy	1	.0010	.001
Det Cord	15	7lb/1000 ft	.105
Demp Chaic (TNT)	3	.500	1.5
RR141 Chaff	5	.0004	.002
Simulator, Grenade	2	.0813	.1626
Bomb Fuze, FMU-54	2	.3600	.72
Time Delay	1	.0018	.0018
Time Delay	3	.0034	.0102
Time Delay	1	.0018	.018
Initiator	3	.0059	.0177
MK-4, Signals	2	.0013	.0026
CTG Imp.	70	.012	.84
CTG 5.56 MM	768	.0011	.8848
CTG .50 Cal	3	.1017	.3051
C-4	60	1.25	37.5
		Total NEW for all items	52.528

Table D1-4. Itemization of waste munitions treated at OB/OD unit, Melrose AFR during 1992-1993

Nomenclature	Quantity	Net Explosive Weight per item (NEW)	Total NEW
CTG, .38 Cal.	1	.0006	.0006
CTG, 40MM	1	.0008	.0008
Fuze, Proximity	1	.0008	.0008
CTG, Signal	3	.1806	.5418
Signal, Smoke	2	.4240	.848
Flare, Aircraft	390	.4212	164.268
Water Gel	7	.5	3.5
CTG, Aircraft	13	.0177	.2301
CTG, Prop Int	1	.0018	.0018
Cord, Detonating	1	.0007	.0007
Cord, Detonating	1	.0006	.0006
Cord, Detonating	1	.0008	.0008
Cord, Detonating	1	.0012	.0012
Cord, Detonating	4	.0020	.008
Cord, Detonating	2	.0014	.0028
Cord, Detonating	1	.0005	.0005
Cord, Detonating	1	.0007	.0014
Cord, Detonating	3	.0024	.0072
CTG, Initiating	1	.0007	.0007
Squid, Electric	499	.1497	74.700
CTG, Impulse	12	.108	1.296
CTG, Initiating	1	.0034	.0034
CTG, Engine Start	2	16.0	32
Kit, Explosive	1	.0037	.0037
Relay, Explosive	4	.0052	.0208
Kit, Explosive	2	.0037	.0074

Table D1-4 (continued)

Nomenclature	Quantity	Net Explosive Weight per item (NEW)	Total NEW
Initiator	3	.0021	.0063
CTG, Impulse	81	.2025	16.403
CTG, Acft	2	.0018	.0036
Kit, Explosive	2	.322	.644
Kit, Explosive	4	.7476	2.990
Delay Init	8	.0012	.0096
Trans Assy, Det	4	.0032	.0128
CTG, Initiating	10	.007	.07
CTG, Prop Init	4	.0072	.0288
CTG, Prop Init	5	.011	.11
CTG, Initiating	2	.0014	.0028
Delay Init	5	.045	.225
CTG, Initiating	3	.0177	.0531
		Total NEW for all items	298.006

APPENDIX D1-2
CANNON AFB REGULATION 136-18

DEPARTMENT OF THE AIR FORCE
Headquarters 27th Combat Support Group (TAC)
Cannon Air Force Base, New Mexico 88103-5000

CAFB REGULATION 136-18

Armament

DECONTAMINATION OF MELROSE BOMBING/GUNNERY RANGE AND DISPOSAL OF MUNITIONS

This regulation establishes procedures for the removal of inert or live ordnance from Melrose Bombing/Gunnery Range, and munitions approved for disposal of AF Form 191, Ammunitions Disposition Request, by any approved method.

1. Responsibilities. The senior Explosive Ordnance Disposal (EOD) member, AFSC 464X0, of the team involved with the operation(s) and supervisors of supporting activities will be responsible for ensuring compliance with this regulation.

2. References. AFR 50-46, Weapon Ranges; AFR 127-100, Explosive Safety Standards; AFM 67-1, Volume VI, Excess & Surplus Personal Property; TACR 136-7, TAC Explosive Ordnance Disposal (EOD) Management Program; TO 11A-1-42, General Instructions for Disposal of Conventional Munitions; TO 11A-1-46, Fire Fighting Guidelines, Transportation, and Storage; and other applicable 60 series explosive ordnance disposal TOs.

3. Explosive Limits. Explosive limits will be held to the minimum. This includes transportation of dud ordnance to a disposal site, consolidation of duds, disposal in place, and munitions approved for disposal (AF Form 191, Ammunitions Disposition Report).

a. Consolidation of items. Charges prepared for disposal will be limited to 1,000 pounds of Class 1, Division 1 explosive.

b. Disposal in place. Explosive limits will be held to the minimum amount necessary to effect disposal of munition(s) encountered.

4. Location of Operations. Melrose Bombing/Gunnery Range.

a. Monthly, annual or 5-year clearance. Targets are cleared IAW AFR 50-46, as supplemented.

b. EOD site. Located 6,000 feet south of the main tower and 4,000 feet west of the east boundary fence of the range complex.

5. Personnel Limits.

a. Minimum:

(1) Munitions disposal operations will be conducted under the supervision and control of a qualified and experienced supervisor, E-5 or above, possessing the AFSC 46450 or 40548. At least two qualified and knowledgeable personnel will be physically present at each disposal operation.

(2) A minimum of two EOD or contractor will be physically present during any range decontamination operation.

(3) At least one qualified EOD or contractor will be included in each range team working in a contaminated area.

b. Maximum. Personnel limits will be based on the type of range decontamination or area clearance to be performed. At no time will the number of personnel exceed the number that can be effectively controlled or supervised. When practical, individual teams will be limited to one qualified EOD or assigned range personnel, or qualified supervisor for every seven team members.

6. Equipment Requirements:

a. EOD Equipment:

(1) Vehicle 4x4, as required.

---

ersedes CAFBR 136-18, 24 April 1987
of Printed Pages: 8
OPR: AOE (MSgt Samuel R. Silva)
Approved By: Lt Col Charles D. Whittenberg
Editor: I. M. York
Distribution: F; X: HQ TAC/DOSSY

ATAH 9

(2) Spare tires, one per vehicle.

(3) Intrabase radio, one per vehicle and one per operating team chief.

(4) Range book.

(5) First aid kit, one per vehicle.

(6) Fire fighting equipment, as required.

(7) Common hand tools, as required.

(8) Pioneer tools, as required.

(9) Munition inspector stamps, as required.

(10) Spray paint, as required.

(11) Spray handles, if available.

(12) Water cans, two each (with ice).

(13) Work gloves, as required.

(14) Non-explosive demolition equipment, as required.

b. Equipment provided by range contractor.

(1) Dump trucks, as required.

(2) Front end loader, as required.

(3) Grader, as required.

7. Safety Precautions.

a. General.

(1) All applicable safety precautions listed in referenced publications will be complied with.

(2) Personnel will not work on the range unless properly briefed by EOD, range, or explosive safety personnel.

(3) At least two individuals will be present during any work in contaminated areas.

(4) When doubt exists as to the condition of an item, the item will be considered hazardous until proven otherwise.

(5) During clearance operations, personnel will maintain safe distance and will assemble only in safe cleared areas.

(6) Ordnance items other than small arms and 20mm positively identified as Target Practice (TP) ammunition, will not be touched or picked up until inspected and certified as inert.

(7) When an unusual situation or safety deviation is noted, all work will be stopped and the senior EOD member or range NCOIC will be notified.

(8) Heavy equipment operators will not run over small ordnance items, such as small arms and miniature practice bombs.

(9) Areas will be cleared of all ordnance prior to grading or plowing. These areas include access roads and lead-in lines in, around, and through target areas.

(10) During range clearance operations, the senior EOD member will maintain radio communication with range tower by intrabase mobile radio. Range crews and teams will maintain communications with senior EOD member or range tower.

(11) Areas where work is to be performed, will be checked by EOD personnel or the range NCOIC prior to dispatching work crews.

b. Emergency procedures.

(1) Cease all operations immediately and, as time permits, relay specific details to 27th Tactical Fighter Wing (TFW) Command Post by phone or by intrabase mobile radio through Cannon Rescue Control.

(2) Unscheduled aircraft. Depart the area immediately to a safe area using the safest and most direct route. Concurrently notify range tower or Cannon AFB Control Tower by radio.

(3) Personal injury. Administer Self Aid and Buddy Care, and request an ambulance or if available, air evacuation by landline or intrabase radio.

(4) Range fires. Notify the senior firefighter. Do not attempt to control grass fires in areas contaminated with explosive ordnance. Control fires in a safe area by means of firebreaks.

8. Responsibilities of Support Agencies.

a. Range Contractor will:

(1) Notify and coordinate with the EOD Branch Operations NCOIC all range maintenance operations involving work in contaminated areas except strafe target areas.

(2) Clean and supervise the cleanup of strafe target as required by applicable directives. This ammunition consists of small arms (up to and including 50 cal ammunition and 20 mm cartridges, cartridge cases, projectiles, and hard objects which can be readily identified as being free of explosive hazards.

(3) Provide heavy equipment and operators for scheduled range clearance operations.

(6) Designate and control holding areas for munitions residue pending disposition by means other than burial.

(7) Do not release any munitions residue from the range without the approval of the EOD Branch.

(8) Ensure that all personnel assigned to the range complex receive required range safety briefings.

b. DRMO will:

(1) Furnish guidance on disposition of munitions residue where specific instructions have not been issued. As a rule, items which cannot be redistributed locally or sold with a monetary return

(2) Determine storage location and classification of munitions residue pending local redistribution/sale to commercial buyers.

(3) Contact the EOD Branch prior to the release of any munitions material recovered from the range.

c. The Base Fire Department will provide fire fighting equipment and personnel during disposal of explosive items and standby personnel when deemed necessary by the Base Fire Chief.

d. The Base Hospital will ensure that an ambulance and a qualified medical technician is available for dispatch to the range, should an emergency arise.

e. Munitions Storage Area will:

(1) Provide munitions inspectors for processing all small arms and 20mm brass (cartridge cases) for turn in to DRMO.

(2) Provide personnel and transportation to transport munitions IAW applicable directives.

(3) Assign holding areas for munitions which are documented on the Ammunitions Disposition Request (ADR) and jointly with EOD, ensure pre-inspection and accountability prior to range disposal operations.

f. EOD personnel will:

(1) Inspect and certify all munitions except small arms and 20mm IP ammunition.

(2) Destroy all items containing explosives or other hazardous materials.

(3) Process all munitions residue, with a resale value for disposition.

(4) Coordinate the disposition of all munitions residue with DRMO.

(5) Perform or monitor final inspection of munitions residue released for local redistribution or sale to commercial buyer.

g. Bio-Environmental Engineer will:

(1) Collect annual soil sample of Thermal Treatment, Open Burn, and Open Detonation Area.

(2) Preserve sample.

(3) Submit sample for Lab Analysis.

(4) Provide copy of Sample Analysis to 27 CSG/DEV.

9. Sequence of Operation.

a. Preliminary actions:

(1) Ensure specific dates and times for all range operations have been coordinated with Range Contractor, 27 TFW Command Post, and 27 TFW Current Operations.

(2) Upon notification of a range operation, determine personnel, equipment, and demolition explosive requirements.

(3) Coordinate the date of operation and action indicated (as applicable) with the following agencies:

(a) Inform munitions Operations Section of the pre-inspection and inventory of all munitions authorized for disposal as specified on completed AF Form 191, and ensure all required documents are available and properly filled out.

(b) Coordinate with the munitions storage section of the type, quantity, date, and time munitions will be picked up or delivered as required.

(c) Contact Base Fire Chief and coordinate the type of fire fighting equipment needed. Contact the Law Enforcement desk (4112) and coordinate any help that might be needed.

(d) Contact range contractor to coordinate heavy equipment requirements.

(e) Contact the Base Hospital Emergency Room and coordinate with the Base Medical Facility about the type of equipment to be readily available during range operations.

(f) Inform the Environmental Coordinator of the quantity (pounds) of explosives to be disposed and date of disposal.

(4) Notify all agencies involved of any change or cancellations.

(5) Postpone or cancel the disposal operation when adverse weather conditions are expected during the disposal period.

(6) Check vehicles for fuel, proper operating conditions, essential accessories, and ensure that all safety appliances are in good working order.

(7) Under no circumstance will ordinance pit be filled without notification and approval by 27 CSG/DEV.

b. Prior to departure to Melrose Range:

(1) Notify the following agencies as applicable. Inform each agency of location, type of operation, and duration:

AGENCY	REQUIREMENTS
Munitions Storage	See paragraph 9a(3)(b).
Munitions AFK	See paragraph 9a(3)(a).
Medical Facility	See paragraph 9a(3)(d).

Security Police	Notification only.
Fire Department	See paragraph 9a(3)(c)
Base Operations	Notification only.
Command Post	Overflight restrictions are in effect.
Wing Safety	Notification only.

(2) Assembly personnel, tools, and equipment.

(3) When more than one vehicle is used, dispatch vehicles with required number of personnel to pick up demolition material. Driver(s) will be briefed on the approved base explosive routes.

(4) Load equipment in other vehicle(s) when available.

(5) Proceed to Munitions Storage Area (MSA) and assemble convoy at the main entrance gate, if applicable.

(6) If transporting explosives from the MSA to Melrose, ensure that the explosives are properly secure to the vehicle and the proper placards are placed on the vehicle.

(7) Brief all personnel on convoy procedures. Refer to CAFBR 75-1, Movement of Explosives.

c. Arrival at Melrose Range:

(1) Notify Security Police of arrival, if applicable.

(2) Call Command Post to confirm that EOD is working on the range and the range is inactive.

(3) Ensure medical and firefighting personnel are available and proper equipment is operational.

(4) Coordinate range operations with range supervisor.

(5) Brief EOD, range, medical, and fire department personnel on specific operations to be conducted, to include the following:

(a) Location of work, size and number of working parties, team chief, and equipment requirements.

(b) Obtain range radio and establish communications with base or other control point. Sign out radio.

(c) Ensure range building is staffed by range personnel.

(d) Designate individual to administer EOD briefing of augmentees, and if required, range personnel.

(6) Assemble personnel for EOD briefing and emphasize the following:

(a) Emphasize safety as outlined in paragraph 7 of this regulation.

(b) Personnel will sign the EOD briefing statement only when instructions have been properly understood.

(c) Adherence to safety rules will be observed at all times.

(7) Divide into teams and assign work locations.

(8) Dispatch working parties.

d. Clearance of targets.

(1) Tactical targets:

(a) EOD personnel will line up and walk through an area to inspect and certify munitions for augmentee or contractor removal.

(b) Certify residue as follows:

1 BDU-33 and MK 106 practice bombs that are dud fired or non-probeable will be placed in the trailer or dump truck and transported to the EOD disposal site.

2 Expended munitions residue will be marked with white spray paint for removal by augmentees or contractor.

3 M/MK 80 series and BDU-45/50 practice bombs will be inspected to determine filler sand or concrete and marked as follows:

a. Inspect nose and tail to determine filler. If INERT, bomb will have "BURY" marked in white spray paint on the side and will be removed by range personnel to disposal area and 60 series procedures performed.

b. If determination cannot readily be made, item will be "BLOW" marked on the side in white paint and disposal procedures will be performed using applicable 60 series technical data. Then item will be removed by range personnel.

e. Disposal of munitions on Melrose Range:

(2) The BDU-33 practice bomb bodies will be placed in the range holding area as time permits for consolidation of items. They will be inspected, marked, transported, and processed through DRMO IAW TO 11A-1-60 and local directives.

(3) MK 80, M series, and BDU-50 practice bombs will be demilitarized in a manner to expose to filler.

(4) Dud fired practice bombs and ADR munitions will be processed and transported to the EOD disposal site and disposed of IAW TO 11A-1-42 and applicable 60 series technical orders.

(5) Coordinate with range control and verify permission to conduct required operations, such as disposal in place, detonation and disposal range and burn operations.

(6) Due to EPA concerns burning of munition items will only be accomplished if no other means of disposal are available.

f. Removal of munitions residue from Melrose Range:

(1) Coordinate equipment requirements with range supervisor.

(2) Inspect outgoing loads of brass for extraneous material and transport brass to MSA and turn in to inspection section.

(3) Ensure all items, except brass, are 100 percent inspected and marked IAW T.O. 11A-1-60 prior to being loaded for removal.

(4) Ensure loads are secured to vehicle so materials will not break loose enroute.

(5) Complete proper paperwork at DRMO, as applicable.

g. Release or sale of munitions residue by DRMO: see paragraph 8b of this regulation.

h. Completion of range operations:

(1) Inspect cleared and disposal areas for munitions residue and dispose of IAW applicable directives.

(2) Release medical and firefighting personnel, to include augmentees, when no longer required.

(3) Turn in range radios.

(4) Call the Command Post to notify them that EOD is departing the range and that the range may go active, as required.

(5) Return any unused explosives to the MSA.

(6) Accomplish the required reports.

(a) AFTO Form 358, Explosive Ordnance Disposal Report.

(b) AF Form 191, Ammunition Disposition Report, if applicable.

(c) AF Form 2005, Issue/Turn in Request.

(d) EOD Thermal Treatment Facility Inspection Log.

(e) DD Form 1348-1, DoD Single Line Item Release/Receipt Document, if applicable.

1 If the identity of the item is not retained and a salable quantity of residue remains after disposal, ensure that the disposal statement reads: "Disposal has been accomplished. There is material which has been downgraded to scrap or waste."

2 If the identity of the item is not retained and a salable quantity of residue does not remain after disposal, ensure that th disposal statement reads: "Disposal has been accomplished. There is not residue material which has been downgraded to scrap or waste."

3 When engaged in a demilitarization operation, the word "disposal" will be deleted form the statement. The "residue material" portion of the statement will be accomplished as in paragraph (e)1 and 2 above.

Distribution. This regulation will be readily available to all personnel concerned and will be available the operating location.

OFFICIAL

DAVID E. BENSON, Colonel, USAF
Commander

JAMES J. SCHNEIDER, Captain, USAF
Chief, Base Information Management

1 Attachment
Expended Munitions List

SUMMARY OF CHANGES
Changes responsibility of the hospital (paragraph 8d); adds requirement for Bio-Environmental Engineer (paragraph 8g); changes certifying residue (paragraph 9d(1)(b)); and adds to the disposal of munitions on Melrose Range (paragraph 9e(6)).

EXPENDED MUNITIONS LIST

The following munitions items have been expended on Melrose Range and may be found during clearance operations:

1. MINIATURE PRACTICE BOMBS

   a. MK 108
   b. BDU 33
   c. BDU 23
   d. AN MK 23
   e. MB 2
   f. MD 6

2. FULL SCALE PRACTICE BOMBS

   a. AN M38A2 (100 lb)
   b. AN M64A1 (500 lb)
   c. MK 81 (250 lb)
   d. MK 82 (500 lb)
   e. M117 (750 lb)
   f. MK 84 (2000 lb)
   g. BDU 38
   h. BDU 45
   i. BDU 50

3. BOMB FUZES USED

   a. M100 series
   b. M112 series
   c. M103
   d. M904 (nose)
   e. M905 (tail)

4. FIRE BOMBS

   a. FMU 7 fuze series
   b. M173 Fuze
   c. M23 igniters

5. AIRCRAFT ROCKETS

   a. 2.25 inch sub-cal
   b. 2.75 inch FFAR
   c. TDU 11 target rocket

6. WARHEADS FOR AIRCRAFT ROCKETS

   a. MK 1 Mod 0 2.75 inch practice
   b. M 61 2.75 inch practice
   c. MK 5 2.75 inch HEAT
   d. MK 156 2.75 inch WP

7. FLARES AND SIGNALS

   a. M 9 aircraft flares
   b. MK 24 aircraft flares
   c. Pen gun flares
   d. Slap flares
   e. MK 13 distress flares
   f. M18 smoke grenades

APPENDIX D1-3
AIR FORCE TECHNICAL ORDER 11A-1-42

T.O. 11A-1-42

TECHNICAL MANUAL

GENERAL INSTRUCTIONS FOR DISPOSAL OF CONVENTIONAL MUNITIONS

POSTED
JR
19 Jul 91

DISTRIBUTION STATEMENT: Distribution authorized to U.S. Government agencies only, administrative or operational use, 21 February 1987. Other requests for this document shall be referred to OO-ALC/PMDT, Hill AFB, Utah 84056-5320.

WARNING: This document contains technical data whose export is restricted by the Arms Export Control Act (Title 22, U.S.C., Sec 2751 et seq) or the Export Administration Act of 1979, as amended (Title 50, U.S.C., App 2401 et seq). Violations of these export laws are subject to severe criminal penalties. Disseminate in accordance with provisions of AFR 80-34.

HANDLING AND DESTRUCTION NOTICE: Comply with distribution statement and destroy by any method that will prevent disclosure of contents or reconstruction of the document.

Published under authority of the Secretary of the Air Force

1 MARCH 1979

CHANGE 21 - 30 MAY 1991

INSERT LATEST CHANGED PAGES. DESTROY SUPERSEDED PAGES.

LIST OF EFFECTIVE PAGES

NOTE: The portion of the text affected by the changes is indicated by a vertical line in the outer margins of the page. Changes to illustrations are indicated by miniature pointing hands. Changes to wiring diagrams are indicated by shaded areas.

Dates of issue for original and changed pages are:

Original	0	1 March 1979	Change	11	23 April 1986
Change	1	12 March 1980	Change	12	21 February 1987
Change	2	15 September 1980	Change	13	25 July 1987
Change	3	19 February 1981	Change	14	28 September 1987
Change	4	8 September 1981	Change	15	11 January 1988
Change	5	19 February 1982	Change	16	6 June 1988
Change	6	12 October 1982	Change	17	21 March 1989
Change	7	6 April 1983	Change	18	20 March 1990
Change	8	30 September 1983	Change	19	1 August 1990
Change	9	1 June 1984	Change	20	15 November 1990
Change	10	16 September 1985	Change	21	30 May 1991

TOTAL NUMBER OF PAGES IN THIS PUBLICATION IS 214, CONSISTING OF THE FOLLOWING:

A-PAGE
11 FEB 91

Page No.	*Change No.	Page No.	*Change No.	Page No.	*Change No.
Title	21	4-18B Blank	2	6-52B Blank	5
A	21	4-19	2	6-53 - 6-54	0
B - C Deleted	21	4-20	0	6-55	9
i - vi	21	4-21 - 4-22	16	6-56 Blank	1
vii - viii Deleted	21	4-22A Added	5	7-1 - 7-2	10
1-1 - 1-2	20	4-22B Blank	5	7-3	0
1-3	3	4-23	1	7-4	5
1-4	6	4-24	0	7-5 - 7-6	0
1-4A	9	5-1	1	7-7 - 7-8	10
1-4B Blank	6	5-2	0	7-9 - 7-12	0
1-5 - 1-6	0	5-3 - 5-4	1	7-13 - 7-14	5
1-7	1	6-1	17	7-15	0
1-8	0	6-2	20	7-16	5
2-1 - 2-13	16	6-3 - 6-5	17	7-17 - 7-18	11
2-14 Blank	0	6-6	20	7-18A - 7-18B	15
3-1 - 3-2	0	6-6A - 6-6B Deleted	17	7-19 - 7-20	10
3-3	7	6-7	17	7-21 - 7-22	0
3-4	0	6-8 Blank	17	7-23	1
3-5 - 3-7	9	6-9 - 6-15	20	7-24	0
3-8 Blank	0	6-16	12	7-25	11
4-1 - 4-2	1	6-17 - 6-28	20	7-26 Blank	11
4-3	16	6-28A Added	10	8-1 - 8-4	0
4-4	21	6-28B Blank	10	8-5	1
4-4A	21	6-29	19	8-6 - 8-10	0
4-4B Blank	9	6-30	20	9-1 - 9-2	17
4-5 - 4-8	16	6-31	1	9-3 - 9-6	0
4-9	1	6-32 - 6-38	0	9-7 - 9-8	20
4-10	0	6-39	1	9-9 - 9-14	0
4-11 - 4-12	16	6-40 - 6-43	0	9-15	1
4-13	18	6-44 - 6-46	1	9-16 - 9-37	0
4-14	20	6-47 - 6-48	20	9-38 Blank	0
4-15 - 4-16	18	6-49	1	Glossary 1	1
4-17	2	6-50 - 6-51	0	Glossary 2	0
4-18	0	6-52	5	Glossary 3	4
4-18A Added	2	6-52A	10	Glossary 4	0

*Zero in this column indicates an original page

TABLE OF CONTENTS

Section/Para		Page
	INTRODUCTION	v
I	SAFETY AND ACCIDENT PREVENTION	1-1
1-1	General	1-1
1-3	General Requirements	1-1
1-17	Range Requirements	1-2
1-29	Personnel Requirements	1-5
1-36	Weather Precautions	1-6
II	DESCRIPTION OF DEMOLITION MATERIALS	2-1
2-1	General	2-1
2-3	Demolition Explosive Charges	2-1
2-5	Demolition Charge Initiators	2-1
2-15	Demolition Accessories	2-6
2-25	Marking	2-11
III	METHODS OF DISPOSAL	3-1
3-1	General	3-1
3-3	Burning	3-1
3-10	Detonation	3-6
3-13	Static Firing	3-7
3-15	Demilitarization	3-7
3-17	Reports	3-7
3-19	Certification of Scrap Metal	3-7
3-21	Deactivation Furnace	3-7
IV	FIRING SYSTEMS PROCEDURES	4-1
4-1	General	4-1
4-3	Nonelectric Systems	4-1
4-9	Electric Firing Systems	4-4A
4-19	Dual Firing Systems	4-11
4-24	Use of Detonating Cord	4-11
4-30	Ignition Trains	4-19
4-33A	Misfires	4-22A
V	TREATMENT OF CHEMICAL AGENT CASUALTIES	5-1
5-1	General	5-1
5-3	Lacrimators (Tear Agents)	5-1
5-8	Sternutators (Vomiting Agents)	5-2
5-13	Screening Smokes	5-2
VI	MUNITION DISPOSAL PROCEDURES	6-1
6-1	General	6-1
6-3	Safety Precautions	6-29
6-5	Disposal Methods	6-29
VII	MISSILE EXPLOSIVE COMPONENTS	7-1
7-1	General	7-1
7-3	Safety Precautions	7-18A
7-5	Disposal Methods	7-18A
VIII	ROCKET MOTORS AND WARHEADS	8-1
8-1	General	8-1
8-3	Safety Precautions	8-1

TABLE OF CONTENTS - Continued

Section/Para		Page
8-5	Rocket Motor Disposal Procedures	8-2
8-14	Rocket Warhead Disposal Procedure	8-10
IX	AIRCRAFT EGRESS ITEMS	9-1
9-1	General	9-1
9-3	Safety Precautions	9-9
9-5	Disassembly Procedures	9-9
9-28	Disposal Procedures	9-33
	GLOSSARY	Glossary 1

LIST OF ILLUSTRATIONS

Figure	Title	Page
1-1	Typical Disposal Range	1-3
2-1	Demolition Charge, M5A1	2-5
2-2	Demolition Charge, M112	2-5
2-3	Demolition Charge Assembly, M183	2-5
2-4	Electric Blasting Cap (Typical)	2-6
2-5	Nonelectric Blasting Cap	2-7
2-6	Typical Blasting Safety Fuse (Time)	2-7
2-7	Detonating Cord	2-8
2-8	M60 Fuse Igniter	2-9
2-9	M1 Flash-Vented Electric Squib	2-9
2-10	Priming Adapter, M1A4	2-9
2-11	Detonating Cord Clip M1	2-10
2-12	Detonating Cord Connector	2-10
2-13	MK7 Charge Container	2-11
2-14	Blasting Machines	2-12
2-15	Galvanometer	2-12
2-16	M51 Blasting Cap Test Set	2-13
3-1	Burning Furnace	3-4
4-1	Cutting The Fuse	4-2
4-2	Priming Adapter	4-2
4-3	Starting Crimp	4-3
4-4	Completing Crimp	4-4
4-5	Testing Galvanometer or Test Set	4-6
4-6	Testing Firing Circuit	4-8
4-7	Wire Splicing	4-9
4-8	Splicing Two Pairs of Wires	4-9
4-9	Priming Adapter	4-10
4-10	Two Half Hitches	4-10
4-11	Nonelectric Dual Firing System Using Two Ring Mains	4-12
4-12	Nonelectric Dual Firing System for a Single Charge	4-12
4-13	Electric Dual Firing System	4-12
4-14	Dual Priming System	4-13
4-15	Detonating Cord Priming Methods	4-15

LIST OF ILLUSTRATIONS - Continued

Figure	Title	Page
4-16	Priming Composition C with Detonating Cord	4-16
4-17	Detonating Cord Connections, M1 Detonating Cord Clip	4-17
4-18	Detonating Cord Connector	4-18
4-18A	Wire Twist Connections	4-18A
4-19	Detonating Cord Connections, Square Knot	4-19
4-20	Detonating Cord Connection, Girth Hitch	4-19
4-21	Electrical Tape Splicing	4-20
4-22	Plastic Bag of Smokeless Powder	4-21
6-1	CBU-3 Series Charge Placement	6-32
6-2	CBU-24, -29, -49, -52 and -58 Charge Placement	6-35
6-3	CBU-25 Charge Placement	6-36
6-4	CBU-70 Charge Placement	6-37
6-5	Charge Placement for CBU-7 Tube Assembly Disposal	6-38
6-6	CBU-38 Charge Placement	6-39
6-7	Disposal, KMU-339/B Cluster	6-40
6-8	MK20 Series (Rockeye) Charge Placement	6-42
6-9	CBU-75 Charge Placement	6-43
6-10	Warhead Placement	6-43
6-11	M18A1 Antipersonnel Mine	6-48
6-12	MJU-6 Countermeasure Chaff Cartridge and Package Charge Placement	6-50
6-13	Control Section Disassembly (Typical) (GBU-10, -11, and -12)	6-53
6-14	Control Section Disassembly (GBU-8 and -9)	6-54
6-15	M1A1 Fuze Extension	6-55
6-16	BLU-107/B (Durandal)	6-55
8-1	Jig, JATO Disassembly 15-KS-1000	8-6
8-2	Jig, JATO Disassembly 15-DS-1000 (Top View)	8-7
9-1	Pendant Disconnect Activator, Part No. 365023-5 and -7	9-10
9-2	Pendant Disconnect Activator, Part No. 365323-1	9-11
9-3	Time Delay Parachute Actuator, Model 7000	9-12
9-4	Rotary Actuator 1925 Series (1000 Series Similar)	9-13
9-5	M3A1 Catapult (Typical)	9-13
9-6	Part No. 10100 Series Rocket Catapult, Typical	9-14
9-7	Part No. 2124-19, Rocket Catapult	9-16
9-8	Rocket Catapult Assembly, Part No. 2174-518-7, -520-7, -522-7	9-18
9-9	Rocket Catapult Assembly, Part No. 2174-518-9, -520-9, -522-9	9-19
9-10	Rocket Catapult 2400 Series (Typical)	9-21
9-11	M8 Cutter	9-23
9-12	M17 Propellant Actuated Gas Pressure Generator	9-24
9-13	Part No. RA061D0012 Series Drogue Chute Gun (Typical)	9-25
9-14	Part No. 807345 Series Parachute Deployment Gun and Cable Assembly (Typical)	9-26
9-15	M3 Initiator (Typical)	9-27
9-16	M27 Initiator (Typical)	9-28
9-17	M5 Initiator (Typical)	9-28
9-18	M28 Initiator (Typical)	9-29
9-19	Initiator, Part No. 0113226 Series	9-30
9-20	Canopy Remover M8A1	9-31
9-21	Canopy Remover, M9	9-32
9-22	Canopy Remover, Part No. 2218 Series (Typical)	9-34
9-23	Rocket Motor Disposal Setup	9-35

LIST OF TABLES

Number	Title	Page
1-1	Weather and Time Factors for Disposal of Chemical Munitions	1-7
2-1	Leading Characteristics, Explosive Charges and Initiating Devices	2-2
2-2	Disposal Accessories and Equipment	2-4
2-3	Demolition Charge Container, MK7 Mods 1 through 8	2-11
6-1	Aircraft External Stores Release and Related Devices	6-1
6-2	20MM, 30MM and 40MM Ammunition, Artillery and Small Arms	6-5
6-3	Bombs	6-9
6-4	CBU Dispensers	6-10
6-5	Chemical Munitions	6-12
6-6	Demolition Charges	6-16
6-7	Fuzes	6-17
6-8	Grenades, Hand, Fragmentation, Practice and Rifle	6-20
6-9	Land Mines	6-20
6-10	Miscellaneous Explosive Devices and Accessory Elements	6-20
6-11	Priming and Initiating Devices	6-22
6-12	Pyrotechnics	6-24
6-13	Explosive Components, Guided Bombs	6-28A
7-1	Explosive Components, ADM-20 (QUAIL)	7-1
7-2	Explosive Components, AGM-12B/C/E (BULLPUP)	7-2
7-3	Explosive Components, AGM-45A/B (SHRIKE)	7-3
7-4	Explosive Components, AGM-65A/B (MAVERICK)	7-3
7-5	Explosive Components, AGM-69A (SRAM)	7-4
7-6	Explosive Components, AGM-78A (STANDARD ARM)	7-4
7-7	Explosive Components, AIM-4A/D (FALCON)	7-5
7-8	Explosive Components, AIM-4F/G (FALCON)	7-5
7-9	Explosive Components, AIM-7D (SPARROW)	7-6
7-10	Explosive Components, AIM-7E/E-2 (SPARROW)	7-6
7-11	Explosive Components, AIM-7F (SPARROW)	7-7
7-12	Explosive Components, AIM-9B/E/JB (SIDEWINDER)	7-7
7-13	Explosive Components, AIM-9L (SIDEWINDER)	7-8
7-14	Explosive Components, AIM-26B (FALCON)	7-8
7-15	Explosive Components, CQM-10B (CIM-10B, BOMARC DRONE)	7-9
7-16	Explosive Components, LGM-25C (TITAN II)	7-9
7-17	Explosive Components, LGM-30 (MINUTEMAN)	7-11
7-18	Explosive Components, SLV-2 Series Launch Vehicles (437 Program)	7-16
7-19	Explosive Components, AQM/BQM-34 Series	7-16
7-20	Explosive Components for Air/Ground Launched Cruise Missiles, AGM-86B/BG-109G	7-18
8-1	Rocket Motors and Warheads	8-1
9-1	Aircraft Egress Systems Items	9-1

INTRODUCTION

PURPOSE AND SCOPE.

This technical manual provides munitions personnel with instructions for disposal of unserviceable, serviceable excess or obsolete munitions and explosive items except nuclear or hazardous items.

Disposal shall not be undertaken without prior approval of OO-ALC or in accordance with AFM 67-1. When disposal is authorized, specific instructions for disposal will be furnished in the Ammunition Disposition Report (AF Form 191) or other document which authorizes the disposal action. If the commander determines that immediate destruction of munitions or explosives is necessary for the protection of lives or property, disposal may be authorized by said commander, accomplished by qualified personnel, and an after-the-fact report submitted to OO-ALC. Hazardous munitions and explosives will be disposed of by explosive ordnance disposal (EOD) personnel. All disposal operations will be accomplished within the installation whenever possible.

This technical manual contains information and procedures for the disposal of explosive items and munitions. Disposition instructions for items not covered in this manual will be requested in accordance with AFM 67-1.

DEFINITIONS.

The word "shall" is used to express a provision that is binding. The words "should" and "may" are used when it is necessary to express nonmandatory provisions. "Will" may be used to express a mandatory declaration of purpose or when it is necessary to express a future event.

WARNINGS, CAUTIONS, AND NOTES. Warnings, cautions, and notes which appear in this manual are defined as follows:

WARNING

An operating or maintenance procedure, practice, condition, statement, etc., which, if not strictly observed, could result in injury to or death of personnel.

CAUTION

An operating or maintenance procedure, practice, condition, statement, etc., which if not strictly observed, could result in damage to or destruction of, equipment or loss of mission effectiveness or long term health hazards to personnel.

NOTE

An essential operating or maintenance procedure, condition or statement, which must be highlighted.

IMPROVEMENT REPORTS.

Suggested improvements to this manual shall be reported in accordance with T.O. 00-5.1.

ADDITIONAL PUBLICATION AIDS.

Other publications in addition to the specific iter technical manuals, which may be used in conjunctio with this manual are as follows:

AFM 66-1	Maintenance Management
AFM 67-1	USAF Supply Manual
AFR 71-4	Preparation of Hazardous Materials for Military Air Shipments
AFR 127-100	Explosives Safety Standards
AFOSH Reg 127-66	General Industrial Operations
AFM 127-201	Missile Accident Prevention
Code of Federal Regulations, Title 49	Transportation
AFM 160-12	Treatment of Chemical Agent Casualties and Conventional Military Chemical Injuries
MIL-STD-105	Sampling Procedures and Tables for Inspection by Attributes
MIL-STD-129	Marking for Shipment and Storage
T.O. 00-5-1	AF Technical Order System
T.O. 11A-1-1	Ammunition Restricted or Suspended
T.O. 11A-1-46	Fire Fighting Guidance, Transportation and Storage, Management Data, and Complete Round Charts

T.O. 11A-1-53	General Instructions for Ammunition Color Coding, Identification of Empty and Inert Loaded Ammunition Items and Components, and Assignment of Version Numbers to Training and Dummy Ammunition Items	T.O. 11A-1-60	General Instructions Inspection of Reusable Munitions Containers and Scrap Material Generated from Items Exposed to, or Containing Explosives

Pages vii and viii are deleted in their entirety.

SECTION I

SAFETY AND ACCIDENT PREVENTION

1-1. GENERAL.

1-2. These safety requirements and precautions will be complied with by munitions personnel during disposal of conventional munitions. All personnel engaged directly as well as indirectly in operations in which a munition is involved shall be thoroughly trained in explosives safety and capable of recognizing hazardous explosive exposures. Thinking safety and working safely must become a firmly established habit when working with or in the vicinity of items capable of creating a hazard due to the nature of their explosive, flammable of toxic fillers.

1-3. GENERAL REQUIREMENTS.

1-4. The Explosives Safety Standards, AFR 127-100 will be followed. The absence of a safety requirement in this technical manual, in a specific technical order covering a given item, or in AFR 127-100 does not necessarily indicate that no safeguards are required. Prompt action will be taken to control any hazard. If an immediately dangerous explosive item is encountered, all operations in the immediate vicinity will be shut down, personnel evacuated to a safe location, and EOD personnel called to render assistance in eliminating the hazard. Operations will not be resumed until the hazard has been eliminated.

1-5. If transmitting antenna of radio, radar or other electromagnetic generating devices are in the vicinity of items covered in this manual, the appropriate section of AFR 127-100 will be consulted. The applicable safety distances for electromagnetic devices will be followed.

1-6. When an abnormal condition is noted, and pertinent procedures contained herein do not specifically relate to the noted irregularity, work shall be stopped and technically qualified guidance will be obtained before continuing the operation.

1-7. All disposal operations will be conducted in accordance with approved procedures as required by AFR 127-100 and this manual. Written procedures will be prepared covering disposal operations and will include applicable safety requirements. No attempt will be made to dispose of any items using less than the amount of explosives specified in disposal methods.

1-8. Some munitions are comparatively difficult to explode; therefore, a search of the area will be made after each detonation for any material that has not been detonated. Use caution when investigating post-firing results. Misfired charges may be present even though the shot appeared to be normal.

1-9. AFR 127-100 provides basic damage data and information concerning hazards to personnel and damage to facilities that may be expected at given distances. These distances do not provide protection to personnel in the open from fragments and debris.

1-10. Fire prevention is an integral part of any munitions disposal operation. At locations where a high fire hazard exists, such factors as weather and local environment conditions become critical. When the fire department is contacted, the local fire hazard potential will be evaluated and a determination made as to additional protective measures necessary to ensure effective fire prevention. If adequate fire preventive/protective measures cannot be taken, disposal operations will not be conducted.

1-11. Disposal actions will be completed in the safest, most expeditious, and most cost effective manner available at a particular disposal site. Items with compatible characteristics and similar disposal methods should be disposed of in a single operation whenever possible. In disposal operations completed by detonation, consideration should be given to utilizing items with a high explosive content to enhance efficiency and cost effectiveness. Mixing of bulk explosives will not be permitted during burning operations.

1-12. The maximum quantity of explosives that may be disposed of at one time will include the net explosives weight of the item(s) to be disposed of plus the weight of the demolition charge. The established explosive limit for the range will not be exceeded and safety distances will not be violated.

1-13. The disposal of munitions by burning or detonation involves the release of toxic fumes. A covered pit may effectively limit the range of fragments; but the control of fumes is dependent upon a number of factors, each of which must be carefully assessed for the particular material being destroyed at the time and place the operation is conducted.

1-14. Chemical munitions will be destroyed in an open space (preferably on a hilltop) and there should be no woods or heavy bush that might trap the fumes close to the operation, especially in the downwind direction.

1-15. A pit should be used to limit fragments. The pit will be a minimum of 1.22 meters (four feet) deep and the item to be destroyed covered with 0.61 meter (two feet) or more of earth. Pits are not required when disposal takes place in a bombing range. If pits or similar aids are not used to limit fragments, cautions will be taken to protect personnel and equipment. The use of a pit or barricade or other means of confinement is mandatory where ranges do not have 732 meters (2400 feet) of clearance.

1-16. Inert filled items will not be disposed of or released for sale as scrap metal until internal fillers are exposed and unconfined. Heat generated during a reclamation operation can cause the filler, moisture and air to expand and burst sealed casings. Venting or exposure may be accomplished in any way necessary to preclude rupture due to confined pressure.

WARNING

- Pentachlorophenol (PCP) Fungicide/ Wood Preservative. Some wooden pallets, crates, and boxes have been treated with the chemical PCP as a preservative. Procurement of PCP treated items was stopped in FY 82 with the last deliveries in FY 84.
- PCP is a toxic chemical compound and skin contact should be avoided. Wooden materials that have been treated with PCP should have been marked with a P and have a clear waxy appearance. However, not all PCP treated wooden products were marked with the P.
- When handling PCP treated wooden ammunition boxes, pallets or crates, personnel will wear leather gloves, long sleeved clothing or protective coveralls to protect against skin absorption of PCP. Respiratory protection will be used whenever PCP treated wood is cut or sawed and inhalation of the wood particles is possible.
- Prior to using PCP treated wood as a combustible material for the disposal of munitions, check with the local bioenvironmental engineering office. If burning is allowable, take reasonable precautions to avoid inhalation of smoke. Stay upwind since the smoke is irritating.
- When disposing of PCP treated wood through Defense Reutilization/Marketing Office (DRMO), the following notification will be prepared and presented to the DRMO office: "NOTIFICATION FOR THE GENERAL PUBLIC - These wooden products have been treated with the preservative Pentachlorophenol (PCP). When handling, use gloves to avoid skin absorption. When cutting or sawing this PCP treated wood, respiratory protection should be used if inhalation of wood particles is possible. The preferred method is disposal by sanitary landfill. Before burning, check with local, county, and state health department (if overseas, consult local national health authorities) to ensure local air pollution codes and regulations will not be violated by open burning. If burning is allowable, take reasonable precautions to avoid inhalation of smoke. Stay upwind since the smoke is irritating."

1-17. RANGE REQUIREMENTS.

1-18. All disposal ranges will be cited in accordance with AFR 127-100. A typical disposal range is shown in figure 1-1.

1-19. Regulations of host nations concerning disposal operations will not be violated. When Army/ Navy disposal ranges are utilized by the Air Force, Army/Navy range requirements will control.

1-20. Bombing ranges may be utilized for disposal operations when authorized by the agency having operational control over them. Requirements of the range controlling activity will be adhered to; however, all safety criteria in this regulation must be followed. Normally, signs and warning devices employed during active range periods are adequate for disposal operations and need not be duplicated.

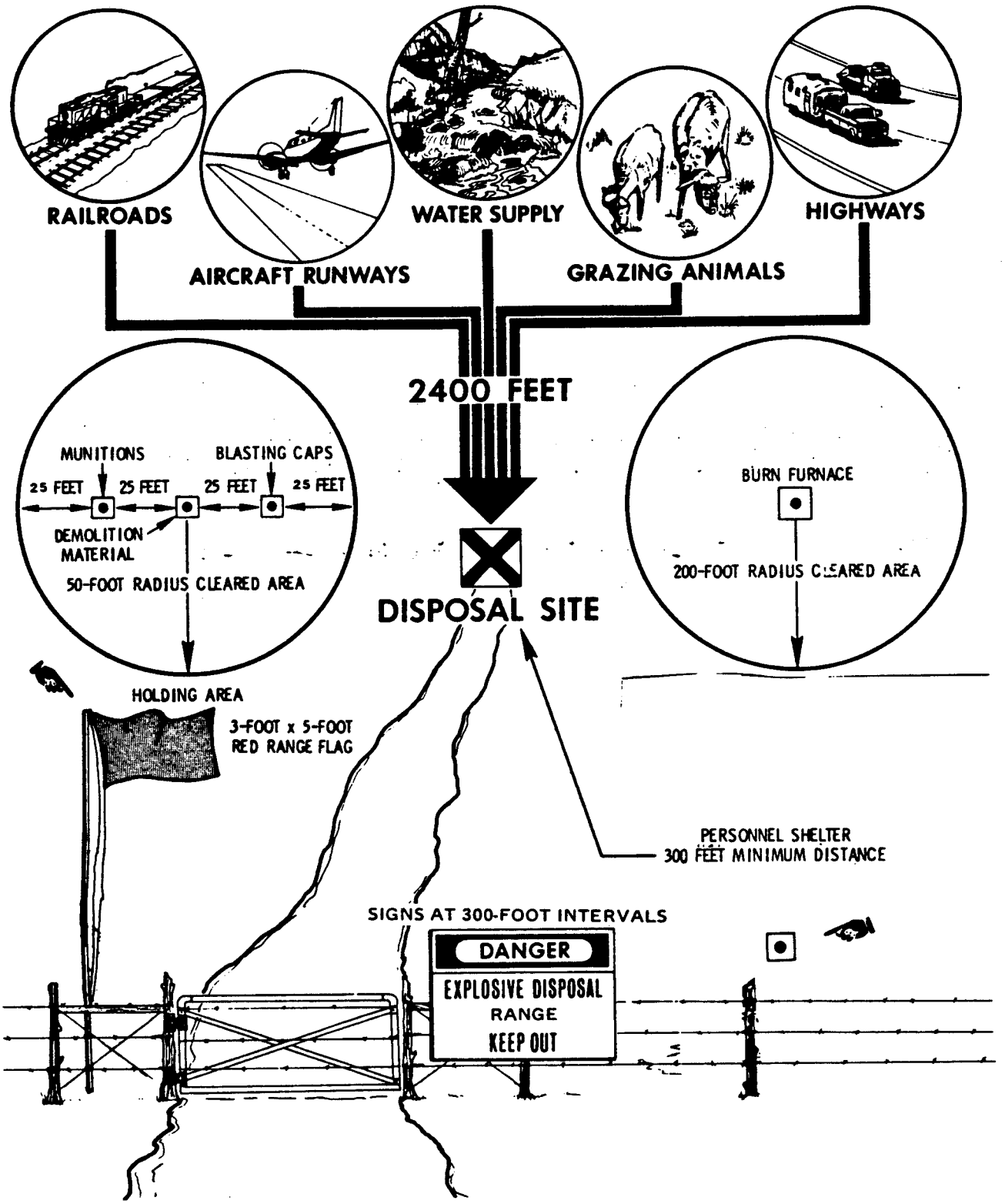

Figure 1-1. Typical Disposal Range

1-21. All dry grass, leaves, and other combustible materials within a radius of 61 meters (200 feet) will be removed from point of burning/detonating site. The radius may be reduced, commensurate with fire hazards, for recognized burning furnace sites provided written approval from Major Air Command has been received. Under no circumstances will the radius be reduced to less than 15 meters (50 feet). The site will be free of deep cracks in which unburned explosives or agents may lodge. The use of concrete pads for burning or detonation is not permissible.

1-22. A holding area will be provided to accept initial deliveries of munitions for disposal and demolition materials. The holding area will be located within the disposal range, but at a suitable distance from disposal sites to preclude uncontrolled destruction of the material by flying fragments, grass fires or burning embers. All dry grass, leaves and combustible material will be removed within a 15 meter (50-foot) radius of the holding area. Munitions to be disposed of, demolition material, and blasting caps will be separated by a minimum of 7.6 meters (25 feet) within the holding area. After initial delivery to the holding area, munitions for disposal and the necessary demolition material will be delivered to the actual disposal site as required. If a disposal range is not large enough to provide an absolutely safe holding area, munitions will only be delivered to the disposal site in quantities for immediate disposal.

1-23. Tools and equipment to be employed during disposal operations will be afforded protection to prevent damage. Safety equipment/clothing will be readily available but must be protected from damage.

1-24. A first aid kit, NSN 6545-00-116-1410, or suitable substitute, will be immediately available during disposal operations. An ambulance or first aid vehicle, manned by personnel trained to handle casualties that may occur during disposal of specific munitions, will be on hand or on call. Type of equipment for specific munitions being disposed of will be coordinated with the Base Medical Facility.

1-25. Fire fighting equipment will be present at the scene to combat grass, brush or equipment fires. Type of equipment and any additional protective measures deemed necessary in high fire risk areas/periods will be coordinated with the Base Fire Marshal.

1-26. A means of communication with both base facilities and disposal personnel will be established. Communication may be by the most convenient method (radio, telephone, walkie-talkie, etc); but the equipment used will be in good working order prior to commencing any disposal operation.

1-27. Where operations require the use of a personnel shelter, the shelter will be located not less than 91 meters (300 feet) from the disposal site and will afford substantial fragment-proof overhead cover and frontal protection.

1-28. The following minimum requirements are to be employed during a disposal operation:

a. Red range flag to be flown during disposal operations and removed only after the range has been declared safe. The flag will be a minimum of 0.91 meters (three feet) wide by 1.52 meters (five feet) long. Flag must be displayed at a height to where it will be a visible warning from a safe distance at all points of access to explosive operation.

b. AFTO Forms 61, with legend "Danger - Explosive Disposal Range - Keep Out" imprinted in them may be ordered in amounts needed through proper channels. AFTO Form 61 is listed in AFR 0-9. These forms will be posted at entrances and at 91 meter (300 feet) intervals around perimeter of range. Any additional required multilingual information will be posted below forms in black letters 5.08 centimeters (two inches) on a white background. See figure 1-1.

c. Barricades, gates or guards at all entrances.

d. In areas where disposal ranges are not under constant control of US Armed Forces, the provisions of preceding subparagraphs a, b, and c may be waived, provided the following safety requirements are strictly adhered to:

(1) Prior to starting disposal operations, the disposal range will be searched for unauthorized personnel.

(2) Guards will be posted to prevent entry into the area prior to and throughout the disposal operation. Guards will be afforded adequate protection from fragments.

1-29. PERSONNEL REQUIREMENTS.

1-30. Personnel requirements and restrictions listed below are the minimum requirements for personnel assigned to disposal operations. Persons not necessary to the operation being conducted will be barred from the disposal area. The number of personnel engaged in disposal operations will be kept to a minimum but in no case less than two.

1-31. Commanders will ensure that care is exercised in the assignment of personnel to disposal duties. All personnel employed in disposal activities will be thoroughly trained in the nature of the material being handled, the hazards involved, and the applicable operating safety procedures and precautions to be observed. The danger of using shortcuts will be thoroughly instilled in the minds of all personnel.

1-32. Supervisory Personnel. Disposal procedures will be performed under the supervision of personnel qualified and highly proficient in such activities. The supervisor will be present during all disposal operations and will be charged with the control of all firing devices and will be responsible for preparation, placement, and firing of charges. Responsibility will not be divided. Supervisory responsibilities include, but are not limited to, the following actions:

a. Have at the site approved written procedures covering the specific munition being disposed of and enforce strict compliance with procedures as written.

b. Instill in all personnel the dangers of shortcuts or deviations from written procedures.

c. Take corrective action in all violations of procedures or orders whether or not an accident occurs.

d. Direct construction and use of personnel shelters if and where necessary.

e. Ensure availability of required protective equipment; that personnel are familiar with the use of such equipment; and enforce, if necessary, use of such equipment.

f. Ensure that sufficient personnel are trained in treatment of casualties and will advise all personnel of any self-aid measures to minimize or prevent injury.

g. Be knowledgeable of the characteristics of chemical agents and methods of detecting leakage.

h. Be thoroughly familiar with the influence of weather conditions on disposal operations.

i. Contact Explosive Ordnance Disposal (EOD) personnel whenever hazardous conditions are encountered.

1-33. Protective measures regarding personnel and equipment will be strictly enforced during all disposal operations.

Additional guidance for explosive items and chemical agents may be found in AFR 127-100, AFM 160-12, Treatment of Chemical Agent Casualties and Conventional Military Chemical Injuries, and the specific item technical manual. The following agencies, as a minimum, will be notified prior to accomplishing disposal procedures listed in this manual:

a. Medical Facility

b. Security Police

c. Fire Department

d. Base Operations

e. EOD (When available on base)

1-34. At minimum safe distances in AFR 127-100, personnel in the open may be exposed to some fragments and debris. Therefore, greater distances should be used; explosive weights lowered; or action taken to reduce hazards by:

a. Confinement of the explosive results at the source to the extent possible.

b. Use of barricades adjacent to the exposure or the source or both.

c. Evacuation of personnel not essential to the disposal operation.

d. Employment of overhead and frontal cover for personnel involved.

1-35. Personnel engaged in disposal work shall be afforded ample time to reach a safe distance prior to detonation. The signal for detonation shall be given by the supervisor after all personnel in the vicinity are protected by substantial cover or have reached a safe distance. Safety distances will be observed by all personnel.

1-36. WEATHER PRECAUTIONS.

1-37. No disposal operation will be conducted during an electrical storm or when such a storm is approaching within 4.8 kilometers (3 miles). Additionally, disposal by detonation using an electrical firing system will not be conducted during sand, dust, or snow storms.

1-38. Disposal by open burning will not be conducted when wind velocity exceeds 15 miles per hour.

1-39. Factors Influencing Disposal of Chemical Munitions. The following factors will be carefully considered when disposing of munitions containing chemical agents. See table 1-1.

a. Temperature and Pressure. Under normal temperature and pressure, chemical agents may exist physically as solids, liquids, or gases. The physical state in which an agent normally exists determines to some extent its tactical use, its effective duration, its physiological action, the type of munition used for its dispersion and the disposal procedure for the chemical agent and the explosive components. The chemical evaporates or becomes a gas more rapidly as the temperature increases. If the temperature can be raised high enough, thermal decomposition may result.

b. Volatility. There are several factors which influence the period of time a chemical agent will exist at the point of its release. Volatility is important in determining the persistency effect of an agent. Volatility varies directly with temperature. A liquid or solid chemical having high volatility will evaporate or turn into a gaseous state more rapidly than a chemical of low volatility.

c. Temperature Gradient. The temperature gradient also effects the persistency of a chemical agent. Temperature gradient is difference obtained by subtracting the air temperature 0.5 meter

Table 1-1. Weather and Time Factors for Disposal of Chemical Munitions

FACTOR	CONDITION			
	Excellent	Fair	Fair*	Unsatisfactory**
Temperature	75°F (24C) and above	55°F (13C) 75°F (24C)	Under 55°F (13C)	Under 55°F (13C)
Sky	Clear	Partly Cloudy	Clear	Cloudy
Wind	4 mph-15 mph (6.5 - 24 km)	5 mph-20 mph (8 - 32 km)	7 mph-15 mph (11 - 24 km)	Under 3 mph (4.8 km) or over 20 mph (32 km)
Time of Day	1000 - 1600	1000 - 1600	1000 - 1600	----------

*This column pertains to winter conditions. When the ground is covered with snow; however, the disposal of toxic agents and munitions is not feasible.

**Chemical agents or munitions will not be disposed of under these conditions except under extreme emergency conditions.

NOTE

- Supervisory personnel should become thoroughly familiar with TM 3-240/AFM 105-7 FIELD BEHAVIOR OF CHEMICAL, BIOLOGICAL, AND RADIOLOGICAL AGENTS. This publication provides a complete discussion of the influence of weather on chemical agents. In general, conditions suitable for the disposal of toxic munitions are directly contrary to those conditions prescribed for their most effective use in combat operations.

- Disposal operations should be performed under weather conditions where a lapse condition exists. If the wind speed is 3 mph or less, it is probable that the wind direction will change so frequently as to be unreliable.

T.O. 11A-1-42

(1.6 feet) above the ground from the air temperature 4 meters (13.1 feet) above the ground. If the temperature at 4 meters (13.1 feet) is greater than that at 0.5 meter (1.6 feet), an inversion or stable atmospheric condition exists. Conversely, if the temperature at 4 meters (13.1 feet) is less than that at 0.5 meter (1.6 feet), a lapse or unstable atmospheric condition exists. If the difference is 1 degree or less, a neutral condition exists. Chemical agent clouds released under lapse conditions tend to dissipate more rapidly than under neutral or inversion conditions. Obviously, disposal work is best conducted under lapse conditions whenever possible.

d. Wind Speed. Persistency is also affected by wind speed. As wind speed increases, the chemical agent cloud covers the downwind hazard area more rapidly; however, the cloud will diffuse sooner and thus travel a shorter total distance. Buildings, vegetation, large bodies of water, contour of the land and other terrain features play an important role in the duration of effectiveness of agent at its point of release and its diffusion downwind. Any obstruction to the movement of air creates turbulence which breaks up the clouds.

e. Rain and Humidity. Rain and humidity vary in their effect on chemical agents. Depending upon the chemical involved, rain can hold the cloud close to the point of release or wash the chemical from the air. Moisture from rain or high humidity will cause some chemicals to break down through hydrolysis.

SECTION II

DESCRIPTION OF DEMOLITION MATERIALS

2-1. GENERAL.

2-2. In this technical manual the term demolition material means those explosive charges and incendiaries (together with necessary accessories) that are deliberately placed, for the express purpose of disposing of unserviceable or serviceable excess munitions. Such materials include explosive charges, explosive initiating devices designed for use with such charges, explosive and nonexplosive mechanical devices, and apparatus such as instruments, tools, and equipment used with charges for performing various disposal functions. This section contains descriptions of demolition materials used in this manual. Table 2-1 lists leading characteristics of explosive charges and initiators. Accessories and tools are listed in table 2-2.

2-3. DEMOLITION EXPLOSIVE CHARGES.

2-4. Demolition explosive charges used in disposal procedures in sections VI through IX are described as follows:

a. Charge, Demolition Block, M5A1 (figure 2-1). This is a 2-1/2 pound charge of composition C-4 explosive having a threaded cap well in both ends. It is 2-5/16 x 2-5/6 x 11-3/4 inches in size and is used where a brisant, powerful, plastic explosive capable of being shaped is required.

b. Charge, Demolition Block, M112 (figure 2-2). This is a 1-1/4 pound block of composition C-4. It is 2 x 1 x 11 inches in size and is in a mylar-film wrapper having a pressure sensitive adhesive tape on one surface, protected by a peelable paper cover. The adhesive feature and C-4 explosive make it an excellent tool for disposal by detonation.

c. Charge Assembly, Demolition M183. The M183 Charge Assembly (figure 2-3) consists of 16 M112 demolition blocks and four M15 priming assemblies. Demolition blocks are packed in two M5 charge bags, eight blocks per bag, and assembly placed in an M85 carrying case. Each priming assembly consists of a five foot length of detonating cord with an RDX booster crimped to each end and a pair of M1 detonating cord clips for attaching the priming assembly to a detonating cord main line. This charge assembly can be lashed or otherwise used as a whole unit or individual 1-1/4 pound M112 block charges can be removed from M85 carrying case and used separately. For detonation of large munitions, any number of assemblies can be attached and prepared for simultaneous detonation.

2-5. DEMOLITION CHARGE INITIATORS.

2-6. Charge initiators include a wide range of devices and materials which contain explosives in some form and which are used to initiate the detonation of demolition charges. Those used in the manual include the following:

2-7. BLASTING CAPS. Blasting caps are used for detonating high explosives. They are designed for insertion into cap wells and are also the detonating element in certain firing devices. Blasting caps are rated in power according to size of their main charge. Commercial blasting caps are normally No. 6 or No. 8 and are used to detonate the more sensitive explosives, such as commercial dynamite and tetryl. Special military blasting caps (M6 and M7) or their commercial counterparts (J1 and J2) are used to ensure positive detonation of the generally less sensitive military explosives. Their main charge is approximately double that of the commercial No. 8 blasting cap. They may be fired either electrically or nonelectrically.

a. Electric Blasting Caps (figure 2-4). These are used when a source of electricity, such as a blasting machine, is available. Two types are in use, military and commercial. Electric caps have lead wires of various lengths for connection into a circuit. The most commonly used are 12 feet long. To prevent accidental firing, they have a short circuiting shunt which must be removed before using the cap. If cap is without a shunt, bare ends of lead wires will be twisted together to provide shunting action. The M6 special electric blasting cap is standard issue electric blasting cap.

b. Nonelectric Blasting Caps (figure 2-5). Nonelectric blasting caps may be initiated by time blasting fuse, firing devices, and detonating cord. Those in use include commercial J1, No. 6 and No. 8, the military special nonelectric M7, and I (j-1). The M7 special nonelectric blasting caps are flared at open end for easy insertion of time fuse detonating cord and are standard issue nonelectric blasting caps.

Table 2-1. Leading Characteristics, Explosive Charges and Initiating Devices (Sheet 1 of 2)

NOMENCLATURE	NATIONAL STOCK NO.	DIMENSIONS (INCHES)				WEIGHT (POUNDS)		DIMENSIONS (INCHES) OUTER PACK
		LENGTH	WIDTH	HEIGHT	DIAMETER	GROSS	EXPLOSIVE (ONE ITEM ONLY - NOT FOR PACK)	
Cap, Blasting, Electric, M6	1375-00-889-2003	3.0			0.275		13.5 grains	
Cap, Blasting, Nonelectric, J1	1375-00-028-5228	2.344			0.237		13.5 grains	
Cap, Blasting, Nonelectric, 8	1375-00-028-5223							
Cap, Blasting, Nonelectric, M7	1375-00-756-1864	2.35			0.241		19.3 grains	
Charge, Demolition Block, M5A1	1375-00-028-5148 M038	12.00	2.00	2.00		2.5 pounds	2.5 pounds	
Charge, Demolition Block M112	1375-00-724-7040 M023	11.25	1.25	2.06		1.25 pounds	1.25 pounds	
Charge, Assembly, Demolition, M183	1375-00-926-3985 M757	10.25	4.87	12.75		22.50 pounds	20.00 pounds	
Cord, Detonating	1375-00-028-5161 M455	5000 feet in 100 foot spools			0.210	111.0	0.006 per foot	
	1375-00-028-5168 M456	4000 feet in 500 foot spools			0.235	117.00	0.007 per foot	
	1375-00-204-0851 M458	3000 feet in 1000 foot spools			0.235	77.00	0.007 per foot	
	1375-00-782-5527 M456	8000 feet in 1000 foot spools			0.235	191.00	0.007 per foot	
	1375-00-965-0800 M456	6000 feet in 1000 foot spools			0.235	152.00	0.007 per foot	

Table 2-1. Leading Characteristics, Explosive Charges and Initiating Devices (Sheet 2 of 2)

NOMENCLATURE	NATIONAL STOCK NO.	DIMENSIONS (INCHES)				WEIGHT (POUNDS)		DIMENSIONS (INCHES) OUTER PACK
		LENGTH	WIDTH	HEIGHT	DIAMETER	GROSS	EXPLOSIVE (ONE ITEM ONLY - NOT FOR PACK)	
Fuse, Blasting, Time	1375-00-028-5151 M670	4000 feet in 50 foot coils			0.205	93.0	0.007 per foot	
	1375-00-038-5246 M670	4000 feet in 50 foot coils			0.195	94.0	0.007 per foot	
Igniter, Fuse, M60	1375-00-691-1671 M766	3.90			0.63	0.25	0.04 grain	
Squib, Electric, M1 Flash Vented	1377-00-219-8567	1.5			0.27		1.6 grains	

Table 2-2. Disposal Accessories and Equipment

NOMENCLATURE	NSN	APPLICATION
Adapter, Priming, M1A4	1375-00-212-4595	Secure blasting cap in threaded cap well of demolition charge.
Battery, Silver Chloride, Dry Cell, BA-245/u	6135-00-128-1632	Authorized for use in testing of galvanometer.
Battery, Silver Chloride, Dry Cell, BA-2245/u	6135-00-833-9909	Authorized for use in testing of galvanometer. Recommended during cold weather.
Cable, Power, Electrical, Firing 500 foot coil		Use in electrical firing systems.
Charge, Shape, MK 7, Mod 0	1375-00-093-7095	When loaded with Comp C, is used when a straight linear cut is required.
Cable, Reel Assembly	1375-00-212-4618	
Clip/Connector, Cond, M1	1375-00-212-4602	Used to connect two lengths of detonating cord.
Crimper, Blasting Cap, M2	5120-00-029-0683	Crimping blasting cap to detonation board or blasting time fuze.
Galvanometer, Testing	6625-00-539-8444	Testing electrical firing systems.
Holder, Blasting Cap	1375-00-093-0140	Used when a perpendicular position of blasting cap is required.
Knife, Pocket	1386-00-832-4175	
Machine, Blasting, 10 Cap	1375-00-212-4814	Electric firing system initiator.
Machine, Blasting, 50 Cap	1375-00-141-9495	Electric firing system initiator.
Machine, Blasting, 50 Cap, M34	1375-00-567-0223	Electric firing system initiator.
Tape, Computing, Demolition Charge		
Tape, Insulation, Electrical, Adhesive, 3/4 inch wide		
Tape, Pressure Sensitive Adhesive, 2 inches wide	8135-00-914-1614 8135-00-663-0916	
Test Set, Blasting Cap, M51	4924-00-999-3454	Testing electric firing systems.
Twine, Hemp, No. 18 8 ounce ball	4020-00-241-8892	
Wire Twist (bundle of 250)	8135-00-846-8409	Used in detonating and connections.

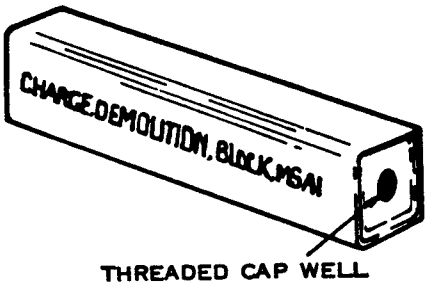

Figure 2-1. Demolition Charge, M5A1

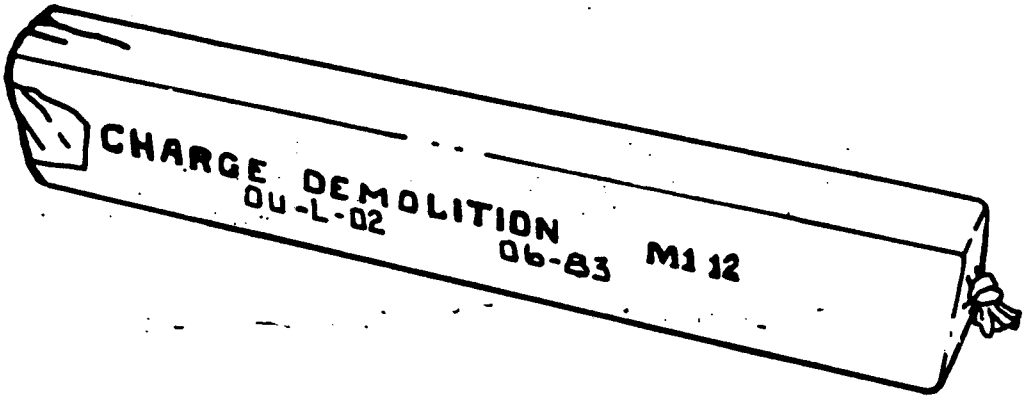

Figure 2-2. Demolition Charge, M112

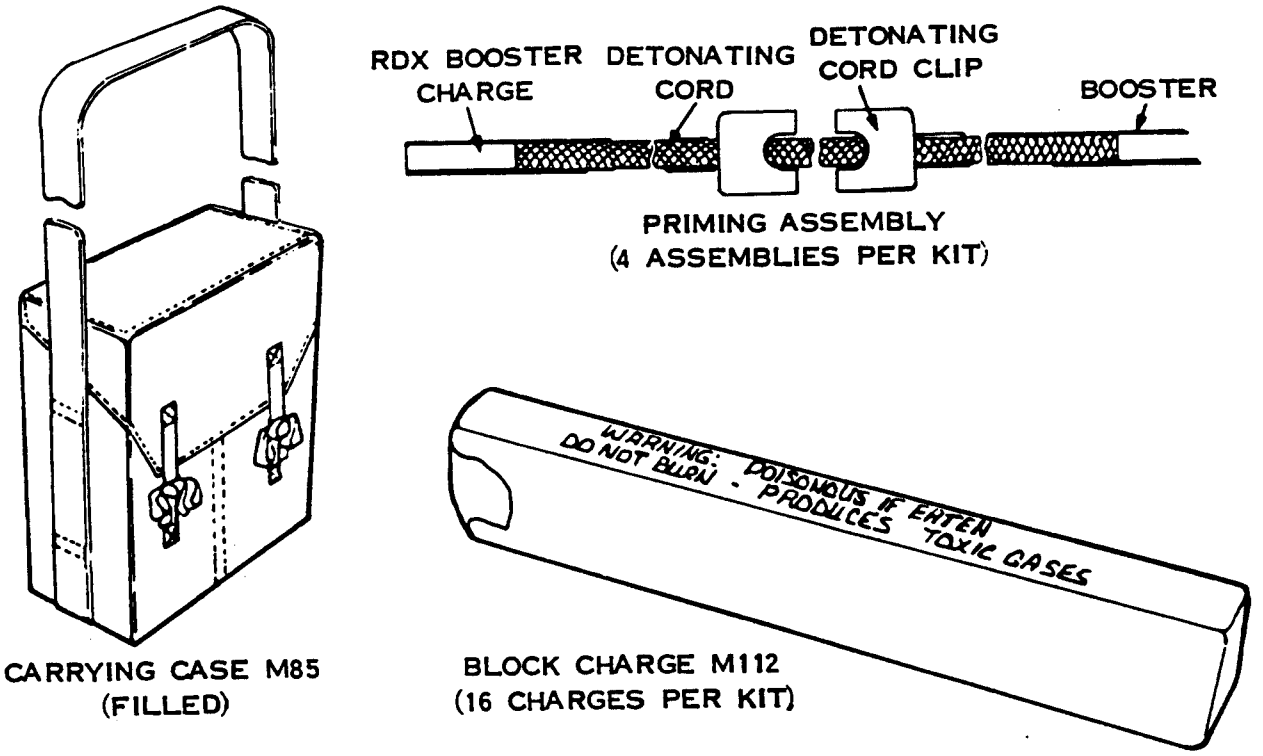

Figure 2-3. Demolition Charge Assembly, M183

2-8. Deleted

2-9. Deleted

2-10. SAFETY FUSE (figure 2-6). Safety fuse consists of black powder tightly wrapped with several layers of fiber and waterproofing material and may be any color, orange being most common. Burning rate may vary for the same or different rolls from 30 to 45 seconds per foot under different atmospheric an climatic conditions. Each roll will be tested prior to using in area where charge is to be placed. In arctic temperatures, outside covering becomes brittle and cracks easily.

2-11. TIME FUSE M700. This fuse is similar to safety fuse and may be used interchangeably with it. Fuse is a dark green cord 0.2 inch in diameter with a plastic cover. Depending on time of manufacture, cover may be smooth or have single bands around outside at one foot or 18 inch intervals and double bands at five foot or 90 inch intervals. These bands are provided for easy measuring purposes. Burning rate is approximately 40 seconds per foot. Burning rate, however, must always be tested in the same manner as that of safety fuse. In arctic temperatures, outside covering becomes brittle and cracks easily.

2-12. DETONATING CORD (figure 2-7). Detonating cord consists of a core of PETN or RDX in a textile tube coated with a thin layer of asphalt. On top of this is an outer textile cover finished with a wax gum composition or plastic coating. It transmits a detonating wave from one point to another at a rate of between 20,000 to 21,000 feet per second. Although it does not lose its explosive properties by exposure to low temperatures, covering becomes stiff and cracks when bent. Thus, great care is required in using detonating cord primers in arctic conditions. Detonating cord is issued in a variety of types and classes including commercial types which may use the trade name Primacord. Plastic reinforced and wirebound types are available. Detonating cord is used to prime and detonate other explosive charges. When its explosive core is detonated by a blasting cap or other explosive devices, it will transmit detonation wave to an unlimited number of explosive charges.

2-13. IGNITER, TIME BLASTING FUSE (figure 2-8). A time blasting fuse igniter is used to light time blasting fuse. M60 igniter is a weatherproof, pull type, percussion igniter.

2-14. SQUIB, ELECTRIC, M1 (figure 2-9). Small, explosive-initiating device used to ignite pyrotechnic or incendiary compositions or black powder when a source of electricity such as a blasting machine or battery is available.

2-15. DEMOLITION ACCESSORIES.

2-16. These accessories perform particular functions in detonation systems or adapt components or charges for disposal procedures.

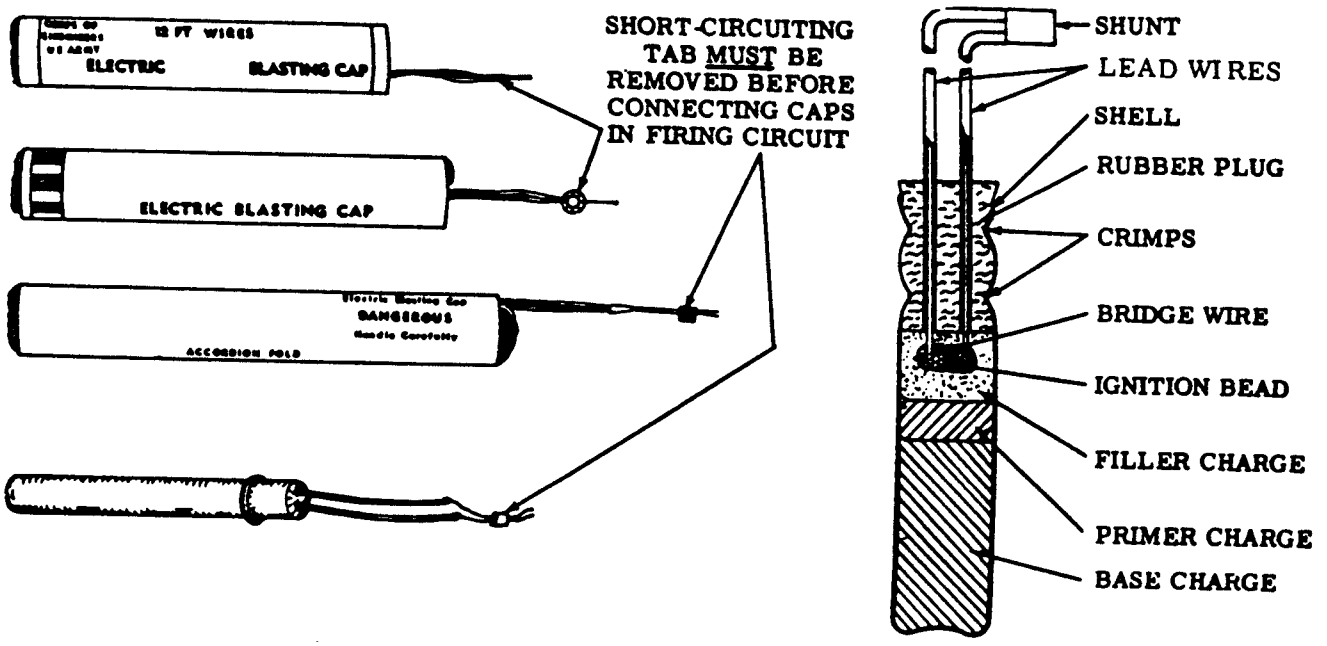

Figure 2-4. Electric Blasting Cap (Typical)

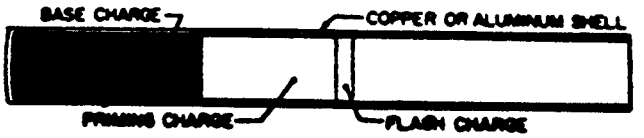

Figure 2-5. Nonelectric Blasting Cap

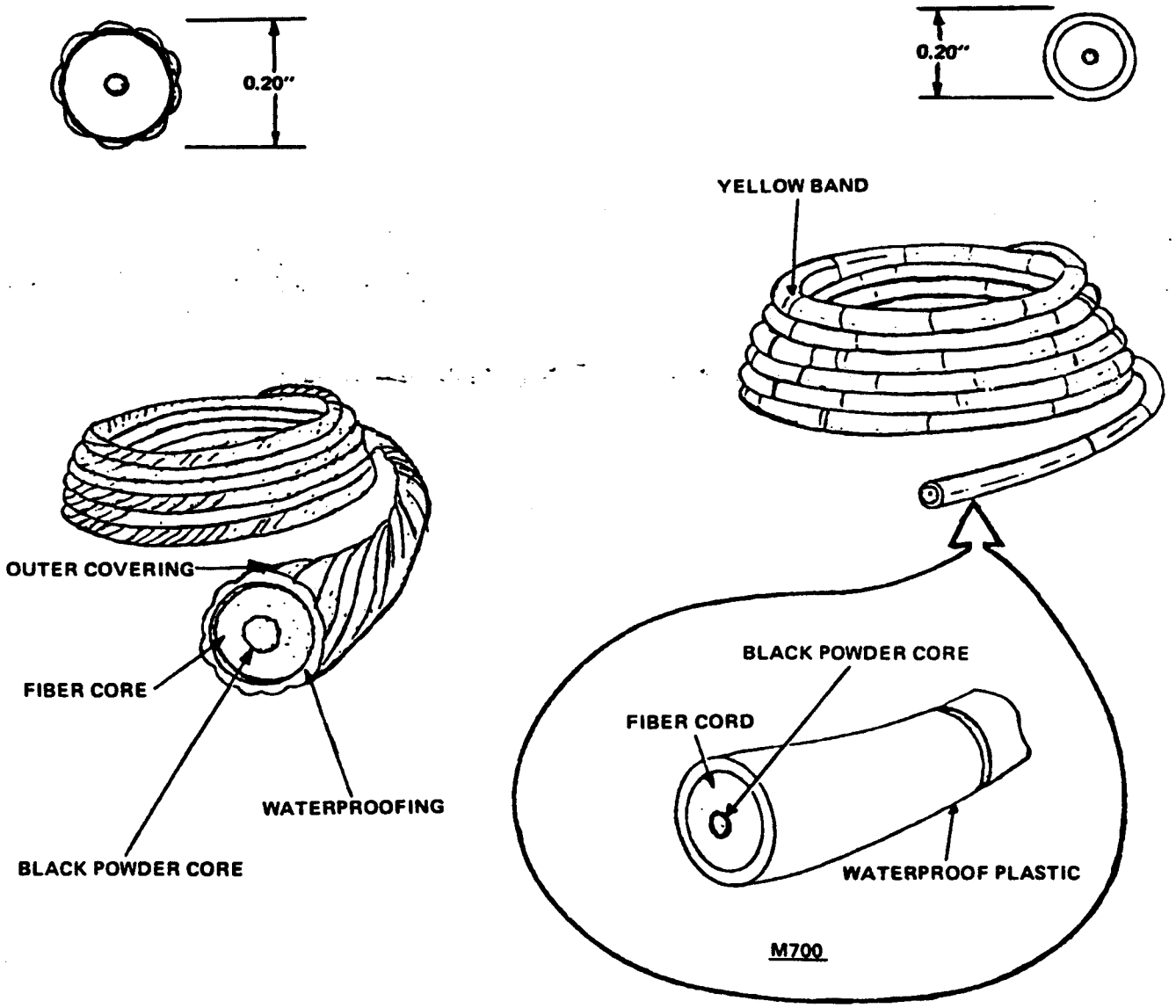

Figure 2-6. Typical Blasting Safety Fuse (Time)

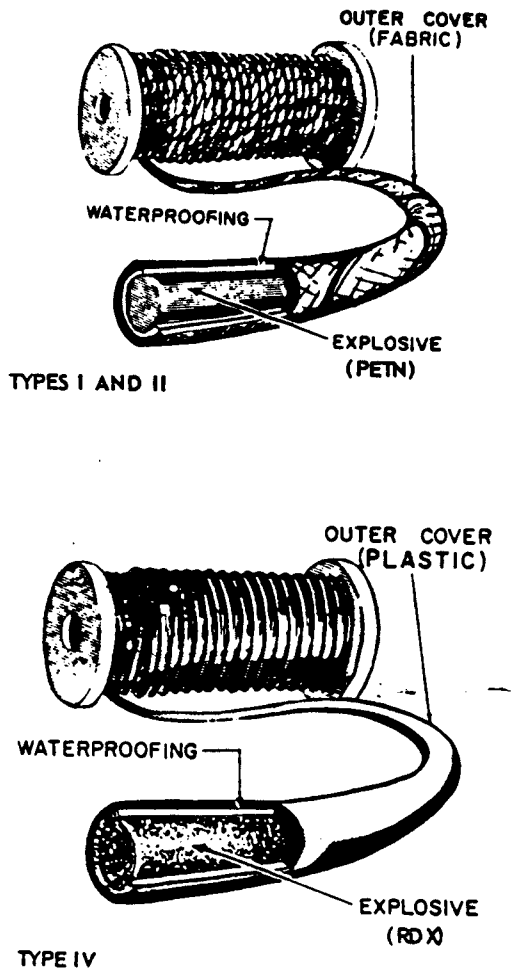

Figure 2-7. Detonating Cord

2-17. PRIMING ADAPTER M1A4 (figure 2-10). M1A4 priming adapter is used to secure an electric or nonelectric blasting cap in threaded activator well of a standard demolition charge. Adapter is made of plastic and is externally threaded at one end so that it can be screwed into activator well of any standard demolition charge. Bore in threaded end is large enough to receive a blasting cap. A smaller bore in opposite end is large enough to receive safety fuse or detonating cord. A blasting cap is held in place by a shoulder formed where bores meet. A slot along length of adapter allows insertion of lead wires of an electric blasting cap.

2-18. CLIP, CORD, DETONATING, M1 (figure 2-11). Detonating cord clip, M1, a steel device, is used to hold together two strands of detonating cord either parallel or at right angles to each other. Connections are made more quickly with these clips than with knots.

2-19. CONNECTOR, DETONATING CORD (figure 2-12). This connector is cylindrical and is composed of either white or blue plastic molding material. It is approximately 1.72 inches long and 0.62 inch in diameter with a 0.12 inch diameter hole located through body of connector. Also, two 60 degree slots are located on same end as holes and aid in easy installation of detonating cord. Detonating cord connector is used to connect two strands of detonating cord. Connections are made more quickly with connector than with knots.

2-20. BLASTING CAP HOLDER. A blasting cap holder is used when procedures require that blasting cap be placed perpendicular to charge. The holder is a three legged, 6.35 centimeters (2.5 inches) long, steel, nonexplosive item designed to hold a blasting cap in the upright position.

2-21. DEMOLITION CHARGE CONTAINER MK7 MODS 1 THROUGH 8 (figure 2-13). The container is inert (empty), made of mild steel, with mod number indicating size of container. See table 2-3. The container, when loaded with Composition C-4, is designated Demolition Charge, MK7. The charge produces a straight linear cut and can be used to open cases of explosive filled ordnance for disposal of explosive. Loaded containers of equal size can be attached in a series to conform to the surface to be cut. It is important that an equal standoff be maintained at all points, particularly when containers are used in series. These containers can be primed for either nonelectric or electric firing. Blasting cap should be inserted only slightly into plastic explosive, with a mound of explosive built up around blasting cap to act as a booster. Cap should be placed in the center of the length of the charge with its axis perpendicular to surface of explosive.

2-22. BLASTING MACHINES. Blasting machines are used to provide electrical impulse needed in electrical detonation procedures. Machines most often used are 10 cap and 50 cap machines shown in figure 2-14. These machines include a built-in safety circuit. This circuit allows no current to reach terminals until the machine's handle (or plunger) has been actuated with sufficient energy to gain nearly the maximum output from the machine. Therefore, unless such a level of output is reached, no current will flow to terminals.

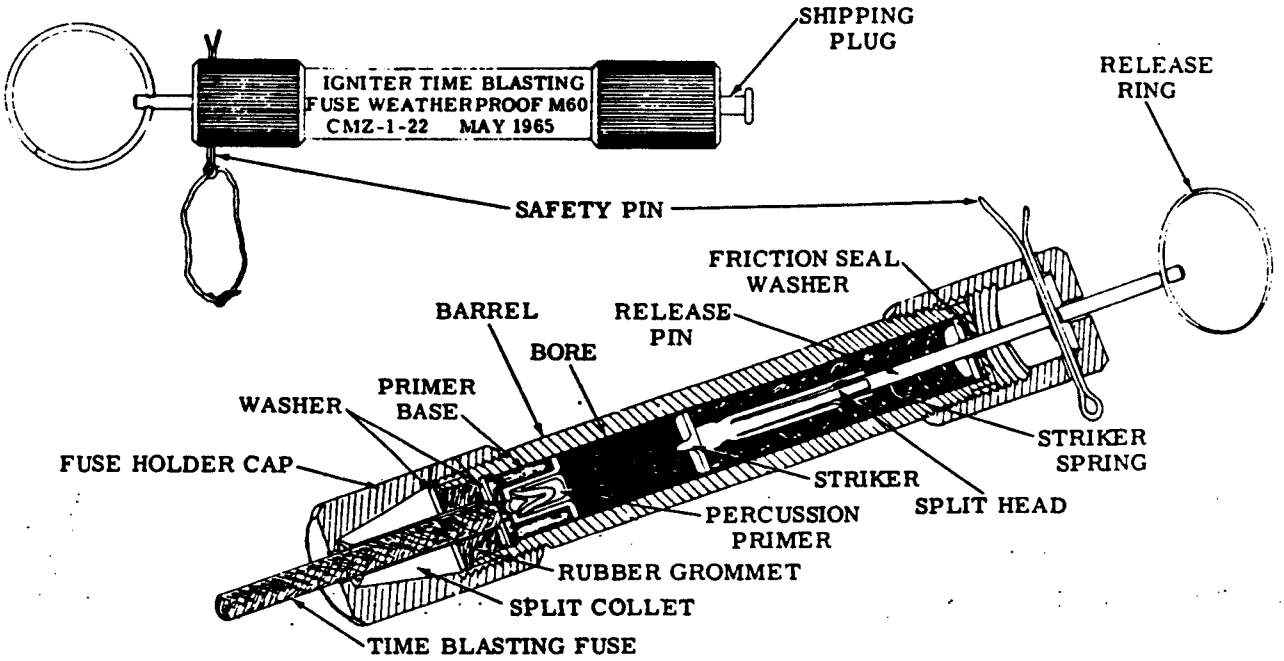

Figure 2-8. M60 Fuse Igniter

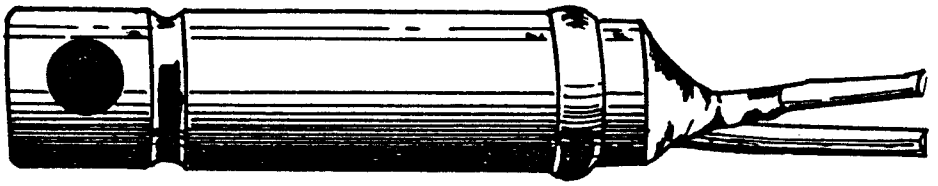

Figure 2-9. M1 Flash-Vented Electric Squib

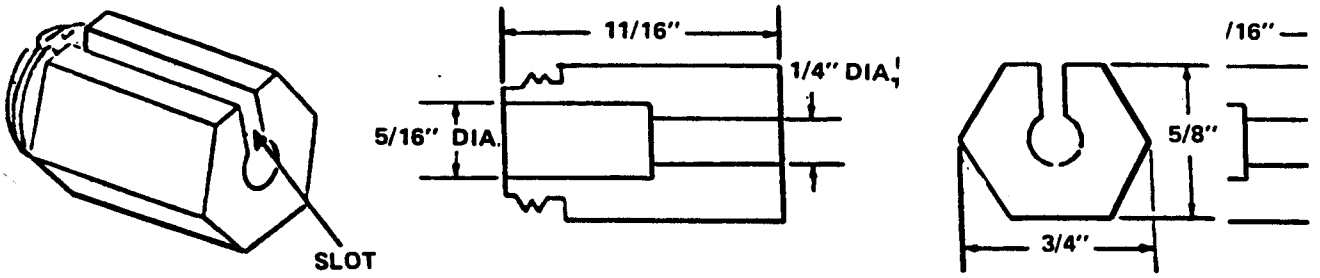

Figure 2-10. Priming Adapter, M1A4

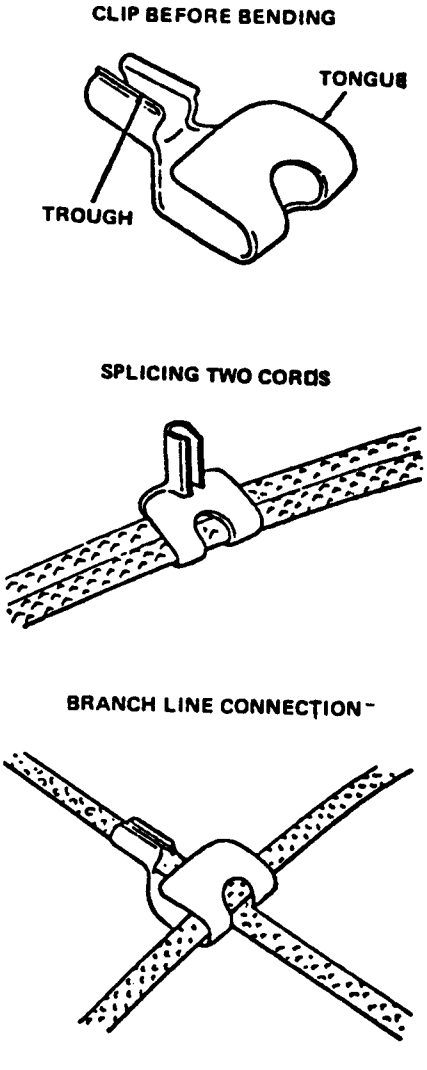

Figure 2-11. Detonating Cord Clip M1

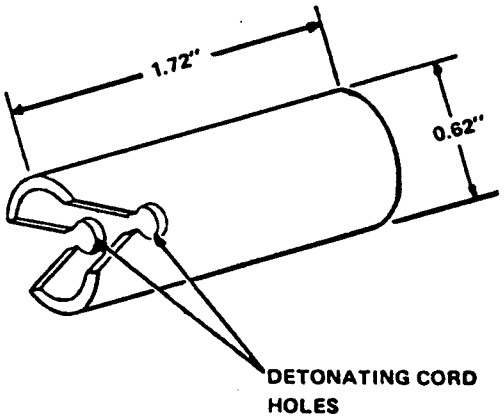

Figure 2-12. Detonating Cord Connector

2-23. GALVANOMETER (figure 2-15). Galvanometer is used to check electrical circuits and their components. It works by sending a minute amount of current from a silver chloride battery through blasting circuit and through a D'Arsonval meter. The meter's needle responds in proportion to amount of resistance current encounters in the circuit. Type of battery authorized is dependent on operating temperatures, and is listed below:

Normal temperatures (0 to +125°F)	Silver chloride dry cell, MIL type BA-245/u
Low temperatures (-20 to 0°F)	Silver chloride dry cell, MIL type BA-2245/u

2-24. TEST SET, BLASTING CAP M51 (Figure 2-16). This test set was developed as a replacement for blasting galvanometer to test continuity of electrical blasting circuit.

NOTE

The M51 should replace blasting galvanometer on an attrition basis only.

a. The M51 is a hand held, plastic bodied, rectangular prismoid with a protruding squeeze handle. There are two screw type contact terminals, one on either side of instrument body, and a test light near one corner of instrument body. Test set M51 contains a magnetotype electrical impulse generator.

b. When handle of test set is depressed, a minute amount of current flows from impulse generator, through blasting circuit, and through a switching circuit. If blasting circuit is continuous and has less than 200 ohms resistance, current can flow through blasting circuit and actuate switching circuit, which lights the indicator lamp. If blasting circuit is open or contains a high resistance, no current (or a very small amount) flows and switching circuit is not actuated.

c. The test set is waterproof and may be used at temperatures as low as -40°F. Continuity testing is accomplished by connecting firing circuit to test set binding posts and then depressing the handle sharply. If there is a continuous (intact) circuit (even one created by a short), indicator lamp will flash.

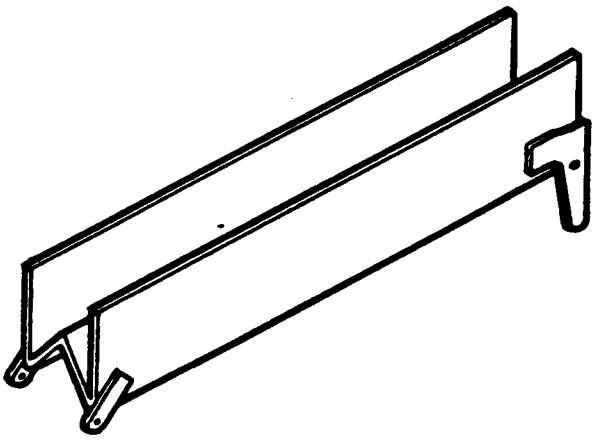

Figure 2-13. MK7 Charge Container

2-25. MARKING.

2-26. Demolition equipment is identified by its nomenclature, identification number, contract number, place and date of manufacture, lot number, and net weight. This information is stenciled on the item itself, on its container or both. Items designed under Army auspices are identified by M numbers, and letters and numbers indicating modifications to the original M-number device; for example, M1A2 indicates the second modification to the M1 device. Some demolition devices do not have either an Army or Navy identification number; these devices are identified by their nomenclature.

Table 2-3. Demolition Charge Container, MK7 Mods 1 through 8

PENETRATION*			ANGLE	DIMENSIONS (INCHES)				
PARTIAL	COMPLETE	DESIGNATION	N	W	T	H	L	D
0.16	0.22	Mark 7 Mod 1	120°	0.22	0.014	0.44	6	0.33
0.18	0.25	Mark 7 Mod 2	120°	0.25	0.016	0.38	6	88
0.15	0.19	Mark 7 Mod 3	80°	0.19	0.013	0.75	6	0.19
0.32	0.40	Mark 7 Mod 4	80°	0.40	0.021	0.81	3	0.38
0.32	0.40	Mark 7 Mod 5	80°	0.40	0.021	0.81	6	0.38
0.40	0.50	Mark 7 Mod 6	80°	0.50	0.030	0.94	6	0.50
0.60	0.75	Mark 7 Mod 7	80°	0.75	0.041	1.06	6	0.75
0.80	1.00	Mark 7 Mod 8	80°	1.00	0.053	1.12	6	1.06

*Penetration in inches in mild steel.

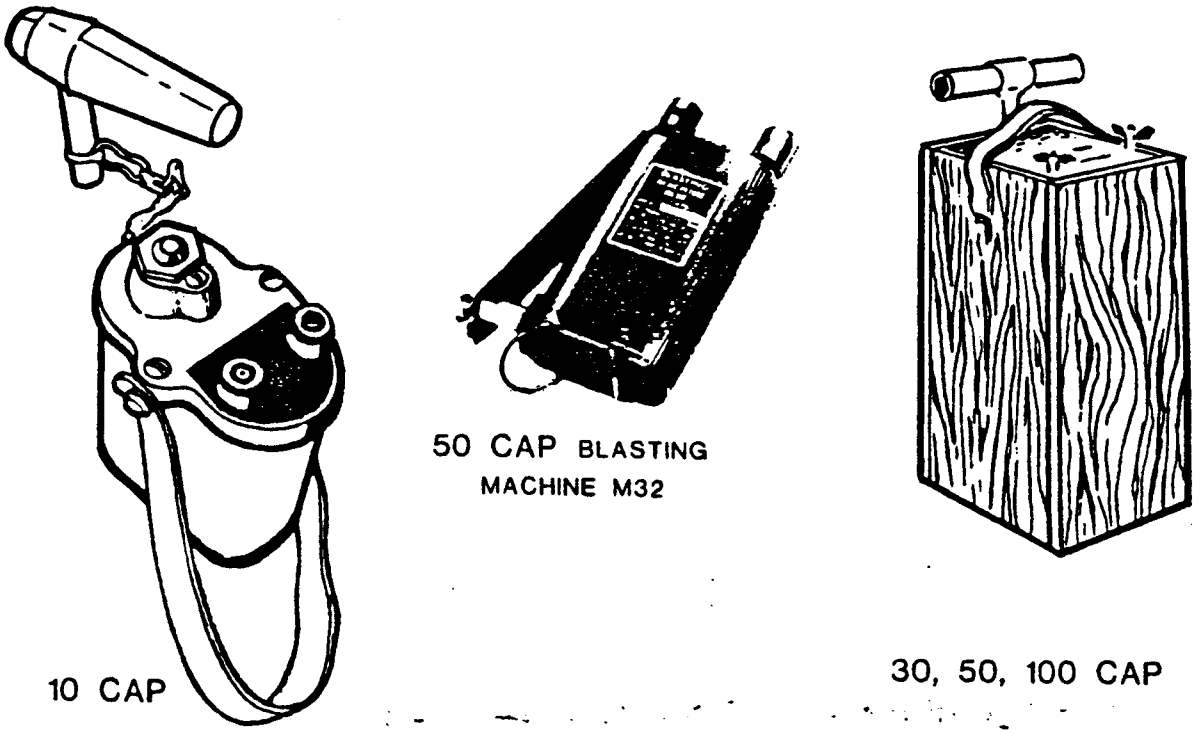

Figure 2-14. Blasting Machines

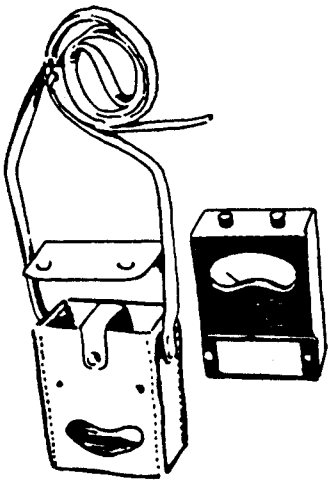

Figure 2-15. Galvanometer

APPENDIX E
ENVIRONMENTAL PERFORMANCE STANDARDS

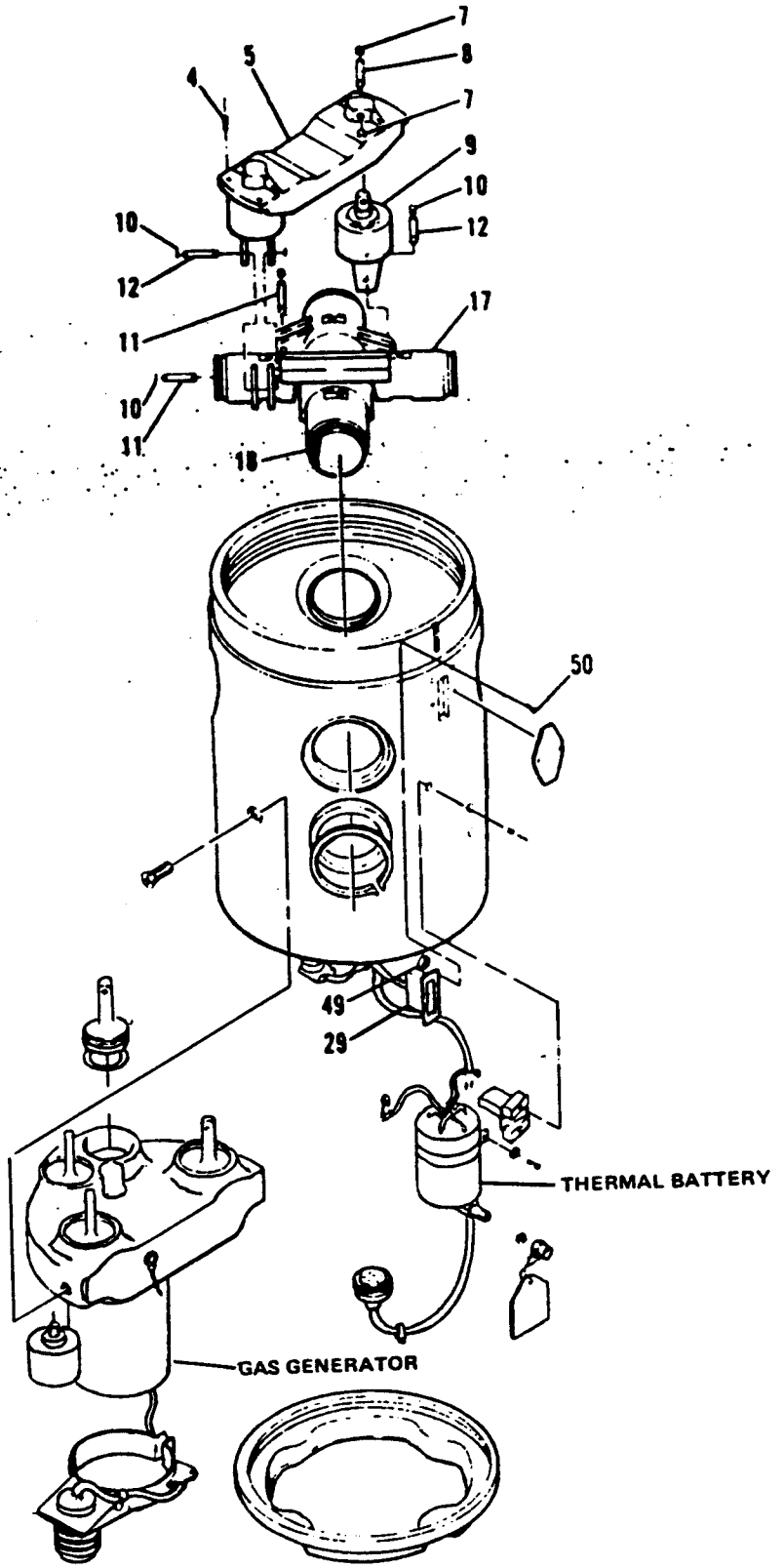

Figure 6-13. Control Section Disassembly (Typical) (GBU-10, -11, and -12)

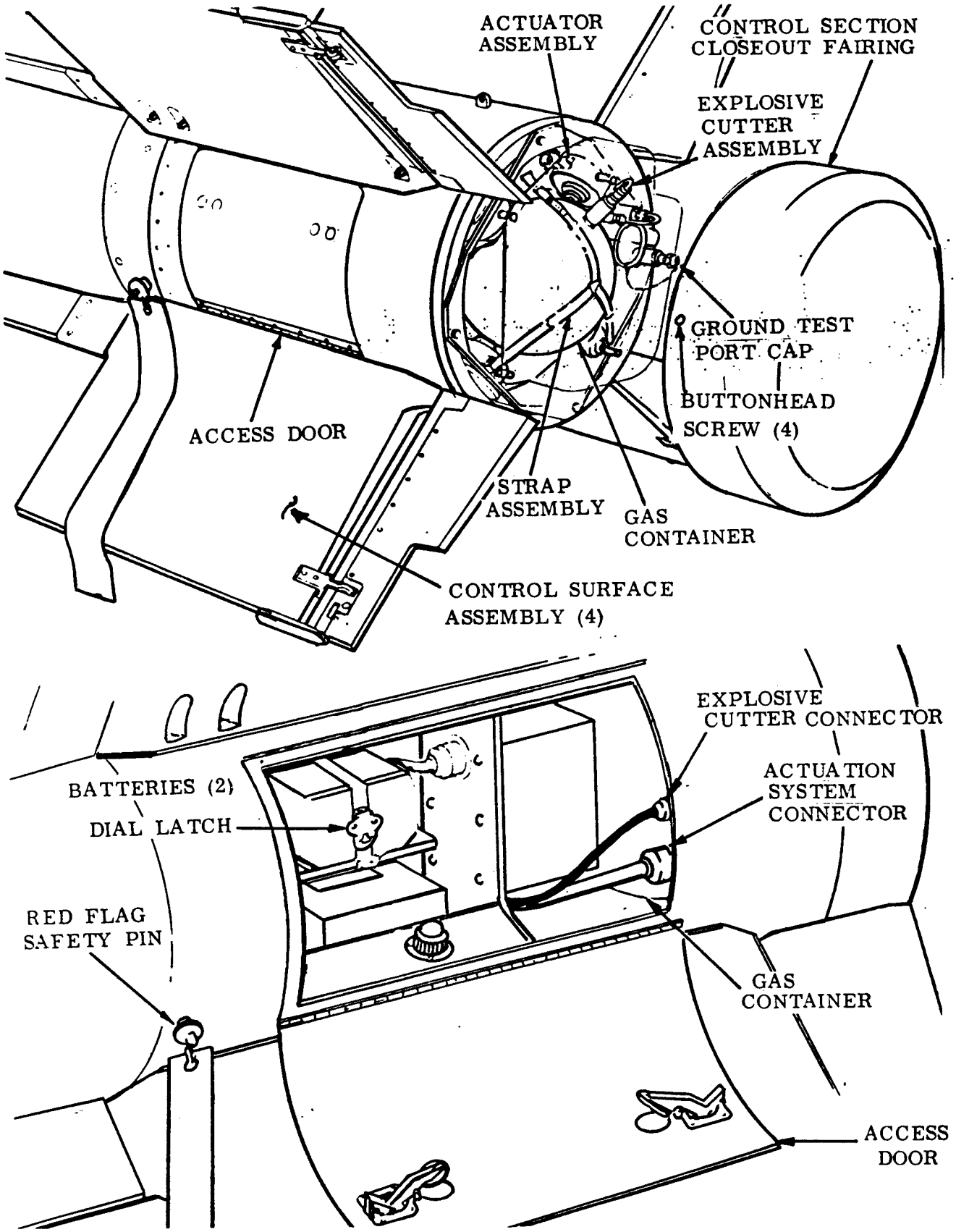

Figure 6-14. Control Section Disassembly (GBU-8 and -9)

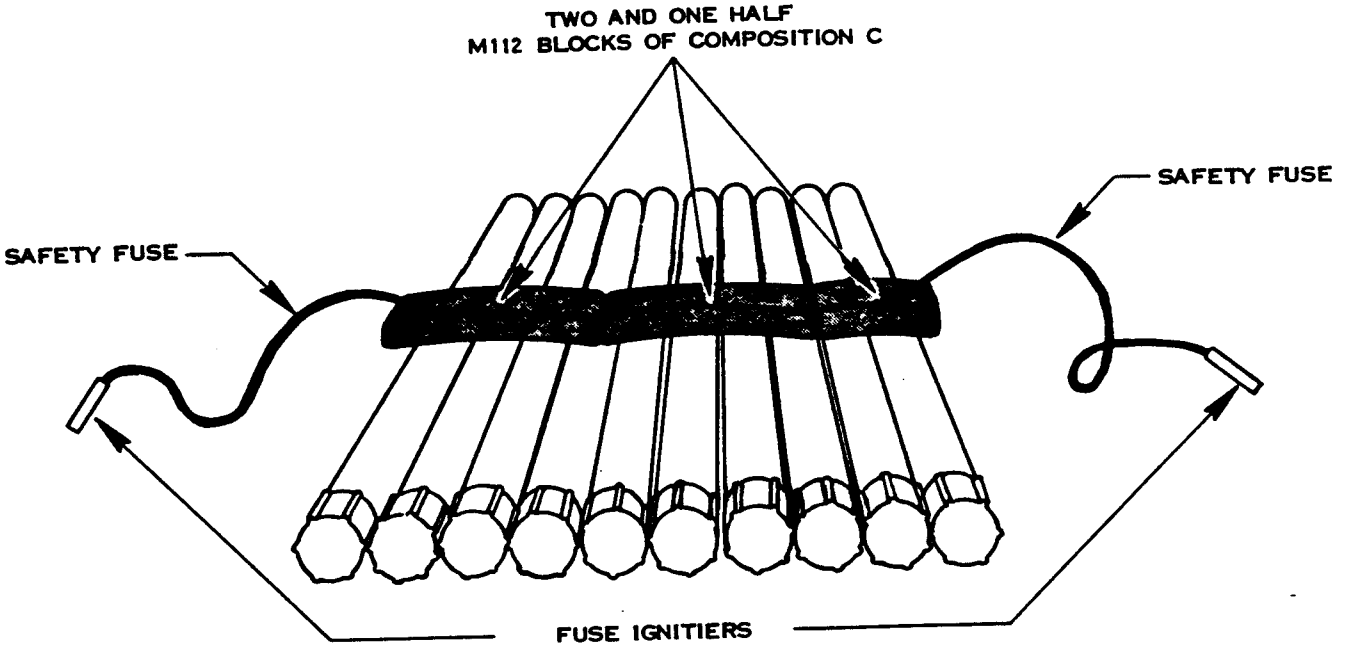

Figure 6-15. M1A1 Fuze Extension

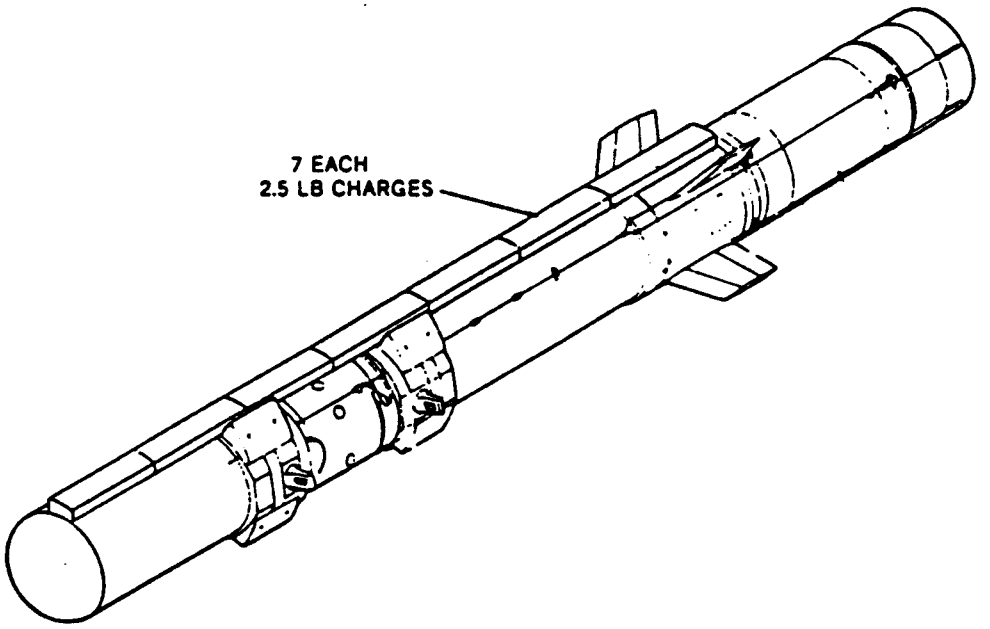

Figure 6-16. BLU-107/B (Durandal)

SECTION VII

MISSILE EXPLOSIVE COMPONENTS

7-1. GENERAL.

7-2. This section provides disposal procedures for missile explosive components. Each weapon system is covered by a separate table with all explosive components listed and the disposal method given by paragraph reference. Tables are as follows:

TABLE	TITLE
7-1	ADM-20 (QUAIL)
7-2	AGM-12B/C/E (BUILDUP)
7-3	AGM-45 (SHRIKE)
7-4	AGM-65A/B (MAVERICK)
7-5	AGM-69A (SRAM)
7-6	AGM-78A (STANDARD ARM)
7-7	AIM-4A/D (FALCON)
7-8	AIM-4F/G (FALCON)
7-9	AIM-7D (SPARROW)
7-10	AIM-7E/E-2 (SPARROW)
7-11	AIM-7F (SPARROW)
7-12	AIM-9B/E/J (SIDEWINDER)
7-13	AIM-9L/M (SIDEWINDER)
7-14	AIM-26B (FALCON)
7-15	CQM-10B (CIM-10B, BOMARC DRONE)
7-16	LGM-25C (TITAN II)
7-17	LGM-30 (MINUTEMAN)
7-18	SLV-2 Series Launch Vehicles (437 Program)
7-19	AQM/BQM-34 SERIES

Table 7-1. Explosive Components, ADM-20 (QUAIL)

ITEM	NOMENCLATURE	IDENTIFICATION NUMBER	DISPOSAL PARAGRAPH
1	*Cartridge, Gas Pressure	P/N 44-660092-301	3-6
	OSS No. 2	P/N 105-023-1100M	3-6
	Shackle Eject	P/N 105-017-2400M	3-6
	Track Jettison		
2	Igniter, OSS No. 3	P/N 4005B10F-5	3-6
		P/N 44-580024-301	3-6
3	*Valve, Fuel OSS No. 3	P/N 1802-063-01	3-6
		P/N 44-580263-301	3-6
	Fuel Shutoff	P/N 44-570222-1	3-6

*May be burned in a furnace.

Table 7-2. Explosive Components, AGM-12B/C/E (BULLPUP)

ITEM	NOMENCLATURE	IDENTIFICATION NUMBER	DISPOSAL PARAGRAPH
1	Aft Section Rocket Engine, (Red Fuming Nitric Acid and Mixed Amine Fuel - MAF-1) LR58RM4 (AGM 92B)	P/N 313207	7-14
	Aft Section Rocket Engine, (Red Fuming Nitric Acid and Mixed Amine Fuel - MAF-1)	P/N 316100	7-14
	Aft Section Rocket Motor, (Solid) MK 8 Mod 0	P/N 293C8000000-19	7-14
2	Center Section Warhead (AGM-12B)	P/N 293D7000000-19	7-7
	Center Section Warhead (AGM-12C)	P/N 293F7000000-009	7-7
	Center Section Warhead (AGM-12E)	P/N 293F0400118-029	Pending
3	Flare, MK 27 Mod 0	P/N LD282821 P/N 456998	3-6, 7-8
4	Fuze, MK 312 (All Mods) (W/o booster)	P/N 66C37781-1 P/N 66C37781-2	3-6 3-6
5	Fuze, MK 312 (All Mods) (W/booster)	P/N LD495642 P/N 66C37781-1 P/N 66C37781-2	7-8 7-8 7-8
	Fuze, Booster, MK44 Mod 0	P/N LD521579	7-8
6	Igniter, Rocket Engine (AGM-12B)	P/N RMD313511	3-6
	Igniter, Rocket Engine (AGM-12C/E)	P/N RMD315390	3-6
7	*Safety Switch and Battery Assembly	P/N 293F808005-009	3-6

*May be burned in a furnace.

Table 7-3. Explosive Components, AGM-45A/B (SHRIKE)

ITEM	NOMENCLATURE	IDENTIFICATION NUMBER	DISPOSAL PARAGRAPH
1	Rocket Motor, MK 39 Mod 0	P/N 2516348	7-13
	MK 39 Mod 1	P/N 2546999	7-13
	MK 39 Mod 2	P/N 2577827	7-13
	MK 39 Mod 3	P/N 2577838	7-13
	MK 39 Mod 4	P/N 2830151	7-13
	MK 39 Mod 7	P/N 4900026	7-13
	MK 53 Mod 1	P/N 2837643	7-13
	MK 78 Mod 0	P/N 4903598	7-13
2	Igniter, MK 265 Mod 0	P/N 2516361	3-6
	MK 274 Mod 0	P/N 2624255	3-6
	MK 274 Mod 1A	P/N 4903591	3-6
3	Warhead, MK 52 Mod 0	P/N 1568663	7-7
	MK 68 Mod 0	P/N 2580648	7-7
	MK 69 Mod 0	P/N 2581065	7-7
	MK 68 Mod 1	P/N 2605700	7-7
	MK 5 Mod 0	P/N 2603637	7-7
	MK 5 Mod 1	P/N 2605697	7-7
4	Fuze, MK 330 Mod 0	P/N 2226974	7-8
	MK 330 Mod 2	P/N 293AS100	7-8

Table 7-4. Explosive Components, AGM-65A/B (MAVERICK)

ITEM	NOMENCLATURE	IDENTIFICATION NUMBER	DISPOSAL PARAGRAPH
1	Battery	P/N 253563-1-1, -2-1	7-11
2	*Dome Cover Actuator	P/N 3240034-1-1, -2-1	3-6
3	Rocket Motor, SR109-TC-1	P/N 3102309-4-1, -4-2 -4-3	7-13
4	Safety, Arming and Fuzing (SAF) w/booster	P/N 3102314-1-1	7-8
5	*Squib, Pneumatic Actuator	P/N 966212 P/N 3285542-1	3-6 3-6
6	Warhead	P/N 3102313-1-1	7-7
7	Igniter	P/N 47099-50 P/N 51122-50	3-6

*May be burned in a furnace.

Table 7-5. Explosive Components, AGM-69A (SRAM)

ITEM	NOMENCLATURE	IDENTIFICATION NUMBER	DISPOSAL PARAGRAPH
1	Battery, Power Supply	P/N P-5560-10-1 GAP-4367-11-3	7-11 7-11
2	Explosive Transfer Assembly	P/N E24616-04	3-6, 7-8
3	Fin Unlock Subsystem Gas Generator Assembly	P/N 7888-2	3-6
4	Pressure Cartridge	P/N 9393-1 P/N 11403-1	3-6 3-6
5	Rocket Motor, SR75-LP-1 (composite propellant LPC-638A)	P/N 250777-506	7-25
6	Safe and Arm Device (Command Destruct)	P/N 71856-101	3-6
7	Shaped Charge, Linear	P/N E24817-01 P/N E24817-02	3-6, 7-8 3-6, 7-8

Table 7-6. Explosive Components, AGM-78A (STANDARD ARM)

ITEM	NOMENCLATURE	IDENTIFICATION NUMBER	DISPOSAL PARAGRAPH
1	Booster, MK 43 Mod 0	P/N LD495576 P/N 6D495576	7-8 7-8
2	Detonating Cord	P/N 423-601034	3-5, 7-9
3	Igniter, MK 190 Mod 3 MK 190 Mod 4	P/N 2825012 P/N 2493140	3-6 3-6
4	Rocket Motor, MK 27 Mod 4	P/N 423-402041 P/N 2556790	7-13 7-13
5	Safety Arming Device, w/booster MK 34 Mod 0 MK 34 Mod 1	 P/N 67A85F004 P/N 67A85F200	 7-8 7-8
6	Visual Marker, SDU 26B SDU 29B	P/N 423-221200 P/N 2604776	7-8 7-8
7	Warhead (Ordnance Section) MK 1 Mod 0/1	 P/N 67A85F451	 7-7

Table 7-7. Explosive Components, AIM-4A/D (FALCON)

ITEM	NOMENCLATURE	IDENTIFICATION NUMBER	DISPOSAL PARAGRAPH
1	Fuze, FMU-31A/B	P/N 69D30349	3-6, 7-8
2	Igniter, M50A1	P/N FR29009-52 P/N 67F29136 P/N 69F30246	3-6 3-6 3-6
3	Primer	P/N 252061 P/N 250016 P/N 257468	3-5, 7-9 3-5, 7-9 3-5, 7-9
4	Rocket Motor, M58A2	P/N FR15097	7-15
5	Warhead, MK 2 Mod 2	P/N 118292	7-7

Table 7-8. Explosive Components, AIM-4F/G (FALCON)

ITEM	NOMENCLATURE	IDENTIFICATION NUMBER	DISPOSAL PARAGRAPH
1	Fuze, T1407	P/N 214000 P/N 191900	3-6, 7-8 3-6, 7-8
2	Igniter, MK 6A	P/N 256261	3-6
3	Pistol, T1407	P/N 213990 P/N 202850	3-6 3-6
4	Propellant, MK 6A	P/N 256260	7-8
5	Rocket Motor, M46	P/N 256225	7-15
6	Warhead, MK 3	P/N 202798	7-7

Table 7-9. Explosive Components, AIM-7D (SPARROW)

ITEM	NOMENCLATURE	IDENTIFICATION NUMBER	DISPOSAL PARAGRAPH
1	Igniter	MK 258 Mod 0	3-5
2	Rocket Motor	MK 6 Mod 3	7-16
3	Safety and Arming Device w/booster	MK 5 Mod 1	7-8
4	Warhead	MK 18 Mod 0	7-7

Table 7-10. Explosive Components, AIM-7E/E-2 (SPARROW)

ITEM	NOMENCLATURE	IDENTIFICATION NUMBER	DISPOSAL PARAGRAPH
1	Igniter, MK 265 Mod 0	P/N 2516361	3-5
	MK 274 Mod 0	P/N 2624255	3-5
	MK 274 Mod 1	P/N 4901256	3-5
2	*Initiator, Dual Delay Squib	P/N 2624250	3-5
3	Rocket Motor, MK 38 Mod 0	P/N 2516329	7-13
	MK 38 Mod 1	P/N 2549616	7-13
	MK 38 Mod 2	P/N 2577830	7-13
	MK 38 Mod 3	P/N 2842411	7-13
	MK 38 Mod 4	P/N 4900000	7-13
	MK 52 Mod 1	P/N 2837646	7-13
	MK 52 Mod 2	P/N 4901262	7-13
4	Safety and Arming Device w/booster		
	MK 5 Mod 2	P/N LD521538	7-8
	MK 35 Mod 0	P/N 2204000	7-8
5	Warhead, MK 38 Mod 0	P/N 2841429-4	7-7

*May be burned in a furnace.

Table 7-11. Explosive Components, AIM-7F/M (SPARROW)

ITEM	NOMENCLATURE	IDENTIFICATION NUMBER	DISPOSAL PARAGRAPH
1	Safety and Arming Device, MK33 Mod 0, W/booster	P/N 917AS3009	7-8
2	Warhead WAU-10/B, MK71 Mod 0	P/N 2603967	7-7
3	Safety and Arming Ignition Assembly	P/N 4904228	3-7
4	Safety and Arming Ignition Assembly	P/N 1131AS114	3-7
5	Rocket Motor, MK58 Mod 2	P/N 4964225	7-13
6	Rocket Motor, MK58 Mod 3	P/N 1131AS100	7-13
7	Warhead, WAU-17B	P/N 1375AS100	

Table 7-12. Explosive Components, AIM-9B/E/J/P (SIDEWINDER)

ITEM	NOMENCLATURE	IDENTIFICATION NUMBER	DISPOSAL PARAGRAPH
1	Fuze, Contact, MK304	P/N 1464540 P/N 1817698	3-6, 7-8 3-6, 7-8
2	Fuze, Influence, MK303	P/N 1504746 P/N 1883783 P/N 67F29233 P/N 67F29233-10	3-6, 7-8 3-6, 7-8 3-6, 7-8 3-6, 7-8
3	Gas Generator, MK1 (NOTS-10D)	P/N 657275	7-8
4	Rocket Motor, MK17 SR-116	P/N 657041 P/N 776740	7-13 7-13
5	Warhead, MK8 Mod 1 Mod 2 Mod 3	P/N 657033 P/N 1802368 P/N 1568854	7-7 7-7 7-7
6	Target Detector, DSU-21/8	P/N 49915	3-6, 7-8

Table 7-13. Explosive Components, AIM-9L/M (SIDEWINDER)

ITEM	NOMENCLATURE	IDENTIFICATION NUMBER	DISPOSAL PARAGRAPH
1	Gas Generator, MK6 Mod 4	P/N 639AS754	7-8
2	Igniter, MK264 Mod 1	P/N 1568376	3-6
3	Igniter, MK297 Mods 0/1	P/N 1203AS01 P/N 639AS4612	3-6 3-6
4	Rocket Motor, MK36, Mods 5, 6, 7, 8, 9, 10, and 11	P/N 2580618 P/N 2880215 P/N 639AS2890 TBA P/N 639AS4600 P/N 639AS4992 P/N 639AS4993	7-13 7-13 7-13 7-13 7-13 7-13 7-13
5	Safe and Arm Device, MK13 Mod 2	P/N 639AS1130	7-8
6	Warhead, WDU-17/B	P/N 639AS631	7-7

Table 7-14. Explosive Components, AIM-26B (FALCON)

ITEM	NOMENCLATURE	IDENTIFICATION NUMBER	DISPOSAL PARAGRAPH
1	Explosive Harness	P/N 244050	3-5, 7-9
2	Primer	P/N 250016	3-5, 7-9
3	Rocket Motor, M60	P/N FR28889	7-15
4	Safe and Arm Firing Device	P/N 244000	3-6
5	Warhead, CR-HE	P/N 256751	7-7

Table 7-15. Explosive Components, CQM-10B (CIM-10B, BOMARC DRONE)

ITEM	NOMENCLATURE	IDENTIFICATION NUMBER	DISPOSAL PARA
1	Igniter, Gas Generator Igniter, Ramjet Engine	P/N 803135 P/N 1057-02	3-6 3-6
2	Initiator Assembly (for M51 motor)	P/N CR28635-502	See Note
3	Pyrogen Unit (for M51 motor)	P/N DR25629-52	3-6
4	Rocket Motor, M51	P/N FR28381-54	7-17
5	Trigger Assembly	P/N 1617-057-02 P/N 1617-039-01	3-6 3-6
6	Initiator Destruct	P/N E18059-02, -03	3-5, 3-9
7	Prima Cord Assembly	P/N E18087	3-5, 3-9
8	Linear Shaped Charge Assembly	P/N 40481	3-5, 3-9

NOTE: Submit ADR for special instructions.

Table 7-16. Explosive Components, LGM-25C (TITAN II)

ITEM	NOMENCLATURE	IDENTIFICATION NUMBER	DISPOSAL PARA
1	Booster, Detonating Cord	P/N P-11 or 60E7-1	3-5, 7-9
2	Cartridge, Gas Pressure	P/N PD60S0129-017, -507	3-6
		P/N 804095-3, 810454-1	3-6
3	*Detector, Stray Voltage	P/N PD64S0336-013	3-6
4	Detonating Cord	P/N MMSN170B-100	3-5, 7-9
5	Initiator, Attitude Control (AC)	P/N 892D729P2, P3	3-6
	Decoy Motor (for G11)	P/N 892D725P1	3-6
	Decoy Motor (for G14, G16)	P/N 892D725P2	3-6
	Decoy Motor (for G9, G10, G12, G13, G15)	P/N 892D725P3	3-6
	Retro Motor	P/N PD50S0001-014	3-6
	Translation Motor	P/N PD50S0003-078	3-6
	Vernier Motor	P/N PD50S0002-016	3-6

*May be burned in a furnace.

Table 7-16. Explosive Components, LGM-25C (TITAN II) (Cont)

ITEM	NOMENCLATURE	IDENTIFICATION NUMBER	DISPOSAL PARA
6	*Squib, Inflight Disconnect	P/N 892D725P3	3-6
7	Initiator, Start Cartridge	P/N 367676, 380162 P/N R1138	3-5, 7-9 3-5, 7-9
	Destruct	P/N PD64S0336-021	3-5, 7-9
8	Motor, Decoy Rocket	P/N 892D723G9 thru G16	7-18
9	Primer, End	P/N 887C518P1	3-5
10	*Primer, Simulator	P/N PD64S0336-005	3-6
11	Rocket Motor, Attitude Control (AC) Retro	P/N 892D724P1 P/N PD50S0001-049	7-18 7-18
12	Rocket Motor, Translation	P/N PD50S0003-067	7-20
13	Rocket Motor, Vernier	P/N PD50S0002-039 P/N PD50S0002-040	7-19 7-19
14	Shaped Charge, Aft Cover Spacer	P/N 131B5480G4 P/N 131B5480G3	7-9 7-9
15	Start Cartridge, Stage I Stage I Stage II Stage II	P/N 380371-9 P/N 380371-49 P/N 380155-9 P/N 380155-49	3-6 3-6 3-6 3-6
16	Wafer, Destruct	P/N PD60S0135-001 P/N PD60S0135-503	3-5, 7-9 3-5, 7-9

*May be burned in a furnace.

Table 7-17. Explosive Components, LGM-30 (MINUTEMAN) (Sheet 1 of 5)

ITEM	NOMENCLATURE	IDENTIFICATION NUMBER	DISPOSAL PARAGRAPH
1	Battery, Squib Actuated	P/N 66602-107	7-11
		P/N 66603-107	7-11
		P/N 1990011	7-11
		P/N 1990012	7-11
		P/N 200734	7-11
		GAP 4140	7-11
		GAP 4156	7-11
		GAP 4157	7-11
2	Battery, Thermal	P/N 66J55013-5	7-11
3	Battery Activation System (BAS)	P/N 69E48006G1	3-6
4	Battery Command Destruct	P/N 332613	7-11
5	Battery Power Supply	P/N 67647-107-11	7-11
6	Bolt, Explosive	P/N 9362073-3	3-6
7	Booster, Explosive, (H Booster)	P/N 31-115-4951	3-6
8	Booster, Time Delay (1 Sec)	P/N 31-115-5969	3-6
	(16/20 Sec)	P/N 31-115-4850	
9	Cable Assembly, Electroexplosive	P/N 66J55026-19	3-6
		P/N 66J55057-19	3-6
		P/N 66J55420-19	3-6
		P/N 66J55421-19	3-6
		P/N 66J55422-19	3-6
		P/N 66J55423-19	3-6
		P/N 66J55741-19	3-6
		P/N 66J55742-19	3-6
		P/N 67J62996	3-6
		P/N 67J62997	3-6
10	Canister, Countermeasure		3-6
11	Cartridge	P/N 3555	3-6
12	Cartridge Actuator	P/N 5280-5	3-6
13	Cartridge, Gas Generator	P/N 5290-9	3-6
		P/N 5290-11	3-6

Table 7-17. Explosive Components, LGM-30 (MINUTEMAN) (Sheet 2 of 5)

ITEM	NOMENCLATURE	IDENTIFICATION NUMBER	DISPOSAL PARAGRAPH
14	Cartridge, Impulse	P/N 150-10123 P/N 66C49103P9 P/N 66C49103P10 P/N 66C49103G2	3-6 3-6 3-6 3-6
15	Charge Assembly, Linear	P/N 0390-1719 P/N 995-4999	3-6 3-6
16	Charge Assembly, Antenna Projection	P/N Y1530	3-6
17	Charge Assembly, Shape	P/N 332660	7-18
18	Connector, Subassembly Explosive	SR-73-AJ-1 P/N 1214286-21	3-5, 7-10 3-5, 7-10
19	Cutter Assembly Tube	P/N 338B100061	3-6
20	Cutter Assembly Wire Bundle	P/N 338B100060	3-6
21	Detonator	P/N 50-3241	3-6
22	Detonator Assembly	P/N 995-5251	3-6
23	Dispenser Assembly	P/N 67E63190	7-18
24	Dispenser, Countermeasure	P/N 67E61828	7-18
25	Explosive Charge	P/N 0390-1727	3-6
26	Explosive Charge Assembly	P/N 31-115-4941	3-6
27	Explosive Charge, Linear	P/N 0390-1718 P/N 0390-1719	3-6 3-6
28	Explosive Assembly, Longitudinal	P/N 31-115-4858	3-6
29	Explosive Harness Assembly	P/N 332602	3-6
30	Fuze Rocket Fuze, Countermeasure	P/N 67D63425 P/N 67D62548 P/N 67D63525	3-6 3-6 3-6

Table 7-17. Explosive Components, LGM-30 (MINUTEMAN) (Sheet 3 of 5)

ITEM	NOMENCLATURE	IDENTIFICATION NUMBER	DISPOSAL PARAGRAPH
31	Generator, Gas Pressure	P/N 320007-1 P/N 322622-1 P/N 338B100055 P/N 66E55940-1 P/N 68D48669G1	3-6 3-6 3-6 3-6 3-6
32	Gas Generator Initiator	P/N 66D50601G6	3-6
33	Gas Generator, RC, 2nd Stage	P/N 1106909	7-23
34	Gas Generator, RC, 3rd Stage	P/N 1128070	7-23
35	Gas Generator, TVC, 2nd Stage	P/N 1107216	7-23
36	Igniter, 1st Stage	M55/M55A1	3-6
37	Igniter, 2nd Stage	M56/M56A1	3-6
38	Igniter, 2nd Stage	SR19-AJ-1 P/N 383617	3-6
39	Igniter. 3rd Stage	M57/M57A1	3-6
40	Igniter, 3rd Stage	SR73-AJ-1 P/N 1128360	3-6
41	Igniter, TVC/RC Gas, 2nd Stage	P/N 1112097	3-6
42	Igniter, RC Gas Generator, 3rd Stage	P/N 1128070	3-6
43	Initiator Assembly	P/N 66D55804-17 P/N 66D55804-19 P/N 26-511-2667	3-6 3-6 3-6
44	Initiator, Rocket Motor	P/N 66D50601G5	3-6
45	Initiator, Charge Assembly, Antenna Projection	P/N Y1580	3-6
46	Interconnecting Box Assembly	P/N 332620	3-6
47	Rocket Motor, 1st Stage TP-H1011	M55/M55A1	7-21

Table 7-17. Explosive Components, LGM-30 (MINUTEMAN) (Sheet 4 of 5)

ITEM	NOMENCLATURE	IDENTIFICATION NUMBER	DISPOSAL PARAGRAPH
48	Rocket Motor, 2nd Stage, ANP 2862 and 2864	M56/M56A1	7-21
49	Rocket Motor, 3rd Stage, CYH and DDP	M57/M57A1	7-22
50	Rocket Motor, 2nd Stage, ANB 3066	SR19-AJ-1	7-21
51	Rocket Motor, 3rd Stage, ANB 2066	SR73-AJ-1	7-21
52	Rocket Motor	P/N 66E49150G1	7-18
		P/N 67E2200	7-18
		P/N 67E2201	7-18
		P/N 67E2202	7-18
		P/N 67E2203	7-18
		P/N 67E2204	7-18
		P/N 67E2205	7-18
		P/N 67E2206	7-18
		P/N 67E2207	7-18
53	Rocket Motor, Countermeasure	P/N 66E55101-17	7-18
		P/N 66E55102	7-18
		P/N 66E55103	7-18
		P/N 66E55104	7-18
		P/N 66E55105-17	7-18
		P/N 66355106	7-18
		P/N 66E55107	7-18
		P/N 66E55108-17	7-18
54	Rocket Motor, Pitch	P/N 330198-1	7-18
		P/N 331121-1	7-18
55	Rocket Motor, Retro, MK 11A	P/N 01A90179-011	7-18
		P/N 01A90179-013	7-18
		P/N 66D56750-1	7-18
		P/N 66D56752-1	7-18
56	Rocket Motor, Spin	P/N 338E100054	7-18
		P/N 330130-1	7-18
		P/N 331120-1	7-18

Table 7-17. Explosive Components, LGM-30 (MINUTEMAN) (Sheet 5 of 5)

ITEM	NOMENCLATURE	IDENTIFICATION NUMBER	DISPOSAL PARAGRAPH
57	Rocket Motor, Tumble, MK 11A	P/N 01A90081-011	7-18
58	Safe and Arm Mechanism	P/N 25-25218	3-6
59	Safety and Arming Device	P/N 66J55130-5 P/N 332615	3-6
60	Safe and Arm/Arm-Disarm, 3rd Stage SR73-AJ-1	P/N 1214110	3-6
61	Safety and Arming Device	KR80000	See Note
62	Sector Assembly	P/N 01A00545	3-6
63	Squib, Electric	P/N 003-309 P/N 308086	3-6 3-6
64	Squib, Cartridge, SR73-AJ-1	P/N 1128115-41	3-6
65	Squib Ordnance Module	P/N 202-10143	3-6
66	Squib and Cable Assembly, Umbilical	P/N 5394	3-6
67	Squib, Electric	Model ES-003	3-6
68	Switch, Squib Actuated	P/N 65240-403-1 P/N 65240-403-11 P/N 2327177	3-6 3-6 3-6
69	Timer, Sequential	P/N 66J55010-3	3-6
71	TT, Manifold Block Assembly, 3rd Stage SR73-AJ-1	P/N 1214311	3-5, 7-10
72	TT, Ring Assembly, 3rd Stage SR73-AJ-1	P/N 1215685	3-5, 7-10
73	Valve Assembly	P/N 2325125 P/N 2328582	3-6 3-6

NOTE: Route to Missile Ordnance Repair Section for firing of explosive squibs.

Table 7-18. Explosive Components, SLV-2 Series Launch Vehicles (437 Program)

ITEM	NOMENCLATURE	IDENTIFICATION NUMBER	DISPOSAL PARAGRAPH
1	Igniter, Vernier Engine	P/N 650291	3-6
	Main Thrust Chamber	P/N 650580	3-6
	Gas Generator	P/N 650717	3-6
	Retro Motor	P/N C20538-B	3-6
2	Motor, Retro Rocket (DM-18)	P/N E20055-1 (w/ Igniter)	7-18
		P/N 7606468 (w/o Igniter)	7-18
3	Safety and Arming Device	P/N 4051X25	3-5
		P/N 84277	3-5
4	Squib, Latch Payload In-Flight Disconnect (IFD)	P/N 0A-B12-411-6.5 (955)	3-6
		P/N 887C827P1	3-6
		P/N 200X-53-3011	3-6

Table 7-19. Explosive Components, AQM/BQM-34 Series

ITEM	NOMENCLATURE	IDENTIFICATION NUMBER	DISPOSAL PARAGRAPH
1	Bolt, Explosive, Auxiliary Fuel Tank	P/N 116F138-1	3-6
2	Bolt, Explosive, Parachute Release	P/N 166L020-1	3-6
3	Charge Assembly, Flexible Linear Shaped	P/N 166L018-1 P/N 166L018-3	3-6
4	Cutter, Reefing Line (4 Sec Delay)	P/N 211520	3-6, 3-9
5	Cutter, Reefing Line (10 Sec Delay)	P/N 211631	3-6, 3-9
6	Cutter, Reefing Line (27 Sec Delay)	P/N 212210	3-6, 3-9

U S GOVERNMENT PRINTING OFFICE: 1982—576-062/3010 Region No 8

Table 7-19. Explosive Components, AQM/BQM-34 Series (Cont)

ITEM	NOMENCLATURE	IDENTIFICATION NUMBER	DISPOSAL PARAGRAPH
7	Cutter, Stabilization Chute Guillotine	P/N 166L082-1	3-6, 3-9
8	Igniter	MK 173, Mod 1	3-6
9	Initiator, Flexible Linear Shaped Charge Explosive Train	P/N 166L018-1 P/N 166L018-3	3-6 3-6
10	Rocket Motor, 2.2-KS-11,000	M77A1/MK23 Mod 1	8-13
11	Valve, Explosive Actuated	P/N 166L042-1	3-6

Table 7-20. Explosive Components for Air/Ground Launched Cruise Missiles. AGM-86B/BG-109G

ITEM	NOMENCLATURE	IDENTIFICATION NUMBER	DISPOSAL PARAGRAPH
1	Wing Ordnance Cartridge	P/N 50-8264-4	3-6
2	Fin Ordnance Cartridge	P/N 50-8268-3	3-6
3	Elevon Ordnance Cartridge	P/N 50-8324-3	3-6
4	Engine Starter Cartridge	P/N 36405	3-6
5	Low Fuel Isolation Initiator	P/N 103377-23	3-6
6	Oxygen Tank Assembly Initiator	P/N 103377-26	3-6
7	Air Supply Valve Initiator	P/N 103377-29	3-6
8	BGM-109G Electric Initiator	P/N 103377-32	3-6
9	Range Safety Valve EBW Initiator	P/N 9391465-2	3-6
10	Expanding Tube Release System (ETRS) Assembly Initiator	P/N 51220	3-6
11	Expanding Tube Release System (ETRS) Assembly Ring	P/N 51302	3-6
12	BGM-109G Rocket Motor Separation Subsystem (Detonator) (TMC/S) P/N 817447	P/N 76Z2737-7	3-6
13	BGM-109G Rocket Motor Separation Subsystem (Ring with Linear Shaped Charge) TMC/S P/N 817422	P/N 76Z2737-6	3-6
14	BGM-109G Rocket Motor	P/N 76A8159	3-25
15	BGM-109G Rocket Motor Safe/Arm Igniter	P/N 76Z2280	3-24
16	Battery Thermal	P/N MXU 692/A	7-11
17	Battery Thermal	P/N BA-648/U	7-11
18	BGM-109G Battery Thermal	P/N 76Z2431-3	7-11

7-3. SAFETY PRECAUTIONS.

7-4. General safety precautions and general requirements pertaining to disposal ranges, personnel, etc., will be adhered to at all times. Any additional precaution/requirement pertaining to a specific item is listed in appropriate disposal method.

7-5. DISPOSAL METHODS.

7-6. Disposal is accomplished by various methods depending on characteristics of item being disposed of. Item placement, method of placing explosive charge, priming, earth cover, etc., will vary with items being disposed of.

WARNING

A possibility of a high order detonation of rocket/missile propellent exists when using explosives/shaped charges to vent and burn missile/rocket motors. Precautions must be taken to provide adequate protection of personnel and equipment.

7-7. METHOD 1.

a. Prepare a pit approximately 1.22 meters (four feet) deep.

b. Place warhead(s) horizontally in pit, except continuous rod or controlled fragmentation warheads, which will be buried nosedown in bottom of pit with only base and fuzewell showing.

c. Using an M112 block of Composition C or equivalent, for each warhead, fill fuze well cavity and mound remaining Composition C over and around fuze well.

d. Connect all Composition C with detonating cord or molded Composition C.

e. Prime Composition C with detonating cord.

f. Cover warhead(s) with approximately 0.61 meters (two feet) of earth.

g. Prepare for detonation using electric/nonelectric firing system in accordance with section IV.

h. Retire to proper distance.

i. Effect detonation.

7-8. METHOD 2.

a. Prepare pit approximately 1.22 meters (four feet) deep.

b. Unpack container, remove any/all inner packing, and replace items in container in contact with each other.

c. Place container in pit.

NOTE

- When more than one layer is placed in container, Composition C will be molded over each layer.
- When disposing of items with boosters, Composition C will be in contact with all boosters in layer.

d. Mold Composition C across all items in layer.

e. Prime top layer of Composition C with detonating cord.

f. Cover container with approximately 0.61 meter (two feet) of earth.

g. Prepare for detonation using electric/nonelectric firing system in accordance with section IV.

h. Retire to proper distance.

i. Effect detonation.

7-9. METHOD 3.

NOTE

Items may be removed from containers and stacked or containers may be stacked.

a. Stack items/containers in a pile on surface.

NOTE

Items in containers require an M5A1 block of Composition C or equivalent, per 45.5 kilograms (100 pounds) of explosive items.

b. Place charge in accordance with one of the following:

(1) Place an M5A1 block of Composition C or equivalent, on top of each container to be disposed of.

(2) Mold Composition C across top and down opposite sides of the stack of items.

c. Prime charge using electric or nonelectric blasting cap firing system in accordance with section IV.

d. Retire to proper distance.

e. Effect detonation.

7-10. FIRE ELECTRICALLY.

7-11. METHOD 4. This method of disposal applies specifically to squib actuated batteries. Procedures are as follows:

WARNING

Battery cases may rupture, resulting in leakage of electrolyte that will cause injury to personnel if it comes in contact with skin or eyes. Electrolyte may be released through vent port. Plastic face shields, rubber gloves, aprons, and boots will be worn when handling electrolyte batteries.

NOTE

- Prior to starting disposal action, positively identify the batteries' contents, i.e., wet electrolyte, pyrotechnic mixture and type of metal.
- Batteries in this section contain precious metal and will be fired electrically to allow recovery of the metal. See T.O. 00-25-113 and/or T.O. 00-25-113-LGM-30.

NOTE

The electrical power source shall have an output of at least 24 volts dc power with a current rating of 10 amperes. Dry battery, BA26, NSN 6135-00-120-1023, or equivalent is recommended.

a. Place battery behind a protective shield.

b. Connect firing line to squib terminals on battery.

c. Connect firing line to power source and apply current.

d. Disconnect firing leads at power source and then at battery.

WARNING

Squib-actuated batteries generate sufficient heat to cause severe burns; allow time for heat to dissipate before handling batteries, or use asbestos gloves.

NOTE

Batteries will retain a charge capability for at least 24 hours. Batteries should be handled and stored carefully to ensure terminals are not shunted.

e. Move batteries to a secure area to preclude pilferage of silver during the 24 hour discharge period.

f. Wash batteries with water if contaminated with electrolyte.

g. Generated scrap will be inspected and certified in accordance with T.O. 11A-1-60.

7-12. MISSILE MOTOR DISPOSAL.

7-13. METHOD 5. (MK17 (AIM-9), MK27 Mod 4 (AGM-78A), MK38 (AIM-7E), MK39 (AGM-45), MK52 (AIM-7E), MK36 (AIM-9L/M), MK53 (AGM-45), MK78 (AGM-45B), SR109-TC-1 (AGM-65A), and MK58, Mod 2 (AIM-7F)).

a. Place motor on ground surface.

b. Place MK7 Mod 7 linear shaped charges lengthwise along motor case.

c. Prime charge using electric or nonelectric blasting cap firing system in accordance with section IV.

d. Retire to proper distance.

e. Effect detonation.

f. Check for explosive residue and dispose of by burning in pit.

g. Inspect and certify generated scrap metal in accordance with T.O. 11A-1-60.

7-14. METHOD 6. (MK88 Mod 0 Motor, LR58RM4 Engine and LR62-RM4 Engine (AGM-12B/C/E.))

WARNING

- Liquid engines showing evidence of leakage will be disposed of by EOD.
- The smoke from the burning liquid engines is toxic. All disposal operations will be conducted at a minimum distance of 732 meters (2400 feet) and downwind from inhabited building, public highways and railways.

a. Ensure MK178 igniter and thrust neutralizer are installed on MK8 Mod 0 motor. Install igniter, part No. RMD 313484 or RMD 313511 in LR58-RM4 rocket engine. Install igniter, part No. RMD 315390 in LR62-RM4 rocket engine. Connect firing line to igniter leads.

b. Place motor/engine forward end down in hole sufficiently deep to cover about three-fourths of the motor/engine; (approximately 0.46 meter (18 inches) in diameter by 0.91 meter (36 inches) deep for the MK8 Mod 0 motor and LR58-RM4 engine and approximately 0.61 meter (24 inches) diameter by 1.17 meters (4 6 inches) deep for the LR62-RM-4 engine).

c. Tamp dirt firmly around motor/engine.

d. Withdraw to safe distance; (up wind from the liquid engines).

e. Apply 28 volts direct current with at least 10 ampere capability to igniter firing line.

WARNING

Impermeable coveralls, hood, rubber boots, gloves and face shield will be worn while flushing liquid engine case and surrounding area.

f. After firing liquid engines flush case and surrounding area with water to remove any residue.

g. Dispose of motor/engine as condition condemned material.

7-15. METHOD 7. (M58A2 (AIM-4A/C/D), M46 (AIM-4F/G) and M60 (AIM-26)).

a. Place motor on ground surface.

b. Place five, M112 blocks of Composition C, or equivalent, along length of missile motor.

c. Prime charges using electric/nonelectric firing system in accordance with section IV.

d. Retire to proper distance.

e. Effect detonation.

f. Check for explosive residue and dispose of by burning in pit.

7-16. METHOD 8. (MK6 Mod 3 Motor (AIM-7D)).

a. Place motor on surface.

NOTE

These procedures are used with igniter installed.

b. Place two MK7 Mod 6 shaped charges across the motor, 15 centimeters (6 inches) from forward end and one just in front of the dovetails on the rear.

c. Connect charges with detonating cord.

d. Prepare for detonation using electric or nonelectric firing system in accordance with section IV.

e. Retire to proper distance.

f. Effect detonation.

g. Check for explosive residue and dispose of by burning.

7-17. METHOD 9. (M51 motor (CIM-10B)).

a. Remove Pyrogen unit and aft cover.

b. Refer to paragraph 7-21 for motor disposal.

c. Dispose of Pyrogen unit by removing cover and burning in pit (paragraph 3-6).

7-18. METHOD 10. (Rocket Motors, Solid Grain (Small).)

a. Procedure 1. Static Firing. (Igniter installed.)

(1) Prepare a hole in compact earth of a diameter and depth to accommodate the specific rocket motor with just the nozzle extending from the ground.

(2) Connect firing line to igniter leads.

(3) Place rocket motor into hole. Tamp dirt firmly around motor.

(4) Retire to proper distance.

(5) Effect ignition.

b. Procedure 2. Alternate Static Firing. (Igniter not installed.)

WARNING

Escaping gas at the initiator well may cause the motor to become propulsive.

(1) Prepare a hole in compact earth of a diameter and depth to accomodate the specific rocket motor with only the nozzle extending from the ground.

(2) Install an expended or unserviceable initiator/igniter.

(3) Mechanically rupture nozzle diaphragm to gain access to propellant.

(4) Place rocket motor into hole Tamp dirt firmly around motor.

(5) Prepare for detonation using electric or nonelectric firing system in accordance with Section IV.

(6) Insert electric or nonelectric blasting cap into the orifice ensuring contact with propellant.

(7) Retire to proper distance.

(8) Effect detonation.

c. Procedure 3. Detonation/Burning.

(1) Prepare a hole at least 0.91 meter (three feet) deep and large enough to accommodate specific rocket motor.

(2) Place rocket motor horizontally in hole.

(3) Split an M112 block of Composition C lengthwise and place on the top center of motor and the full length of the case.

(4) Prime explosive using electric or nonelectric firing system in accordance with Section IV.

(5) Cover pit with pierced steel planking, or suitable substitute.

(6) Retire to proper distance.

(7) Effect detonation.

(8) Check for explosive residue and dispose of by burning in pit.

7-19. METHOD 11. (LGM-25C (TITAN II) Vernier Rocket Motor.)

a. Prepare a hole approximately 0.56 meter (22 inches) deep so that the nozzle boss will be at ground level.

b. Remove motor nozzle.

c. Place motor in pit, nozzle boss up. Tamp dirt firmly around motor.

d. Prepare for detonation using electric or nonelectric firing system in accordance with Section IV.

e. Prime motor by inserting electric or nonelectric blasting cap against propellant grain. Cap will be inserted its full length against grain and se-secured in place with tape or wadded paper.

f. Retire to proper distance.

g. Effect detonation.

h. Check for explosive residue and dispose of by burning.

7-20. METHOD 12. (LGM-25C (TITAN II) Translation Rocket Motor.)

a. Procedure 1. Static firing.

(1) Prepare a hole approximately 1.53 meters (five feet) deep and wide enough to accommodate motor with thrust cone extending above surface of ground.

(2) Line bottom of pit with steel plate a minimum of 0.64 centimeters (1/4-inch) thick. The steel plate will have an opening to accommodate initiator. Remove dirt from below opening to allow clearance for initiator.

(3) Remove nozzle.

(4) Attach electrical connector to initiator. Tape electrical leads on nose and tape along side of rocket motor. To prevent damage or shorting against steel plate, heavily insulate lead wires approximately 0.38 meters (15 inches) from initiator.

(5) To avoid damage to initiator, carefully place rocket motor in hole. Tamp dirt firmly around motor.

(6) Retire to proper distance.

(7) Effect ignition.

(8) Check for explosive residue and dispose of by burning in pit.

b. Procedure 2. Alternate Static Firing.

(1) Prepare hold as in Procedure 1.

(2) Remove nozzle.

(3) Ensure that an initiator (previously fired or unserviceable) is installed to preclude a reverse thrust condition.

(4) Carefully place rocket motor in hole. Tamp dirt firmly around motor.

(5) Prepare for detonation using electric or nonelectric firing system in accordance with Section IV.

(6) Insert electric or nonelectric blasting cap into star perforation of the propellant. Clean waste or dry paper may be used to hold blasting cap against surface of the propellant.

(7) Retire to proper distance.

(8) Effect detonation.

(9) Check for explosive residue and dispose of by burning in pit.

c. Procedure 3. Detonation/Burning.

(1) Prepare a hole approximately 1.53 meters (five feet) deep, 1.53 meters (five feet) long and 0.61 or 0.92 meter (two or three feet) wide.

(2) If possible, remove initiator and nozzle.

(3) Place rocket motor horizontally in hole.

(4) Prime rocket motor using one of the following methods:

(a) Place strip of Composition C approximately 1.27 centimeters (1/2 inch) diameter the full length of rocket motor.

(b) Cut three lengths of detonating cord approximately the length of motor. Place one strand on top of other two and tie into a bundle; tape lengthwise on rocket motor.

(5) Prime Composition C/detonating cord using electric or nonelectric firing system in accordance with Section IV.

(6) Deleted

(7) Retire to proper distance.

(8) Effect detonation.

(9) Check for explosive residue and dispose of by burning in pit.

7-21. METHOD 13. (LGM-30 (MINUTEMAN) Motors, M55, M55A-1, M56, M56A1, SR19-AJ-1 and SR73-AJ-1 and any solid grain rocket motor over 227.3 kilograms (500 pounds).

WARNING

- Motors which have been damaged, or if damage is suspected, will be disposed of by EOD.
- No more than one LGM-30 rocket motor will be disposed of at a time unless an explosive safety distance of 91.5 meters (300 feet) is maintained between motors.

a. Inspect motor to ensure that explosive components (S/A device and igniter) have been removed.

b. Mold Composition C into a worm approximately 1.9 centimeter (3/4 inch) in diameter and place full length of the motor case. Mold additional Composition C completely around motor at both Y joints of the case.

c. Prime Composition C using electric or nonelectric firing system in accordance with Section IV.

d. Retire to proper distance.

e. Effect detonation.

f. Check for explosive residue and dispose of by burning in pit.

7-22. METHOD 14. (LGM-30 (MINUTEMAN) Motors, M57 and M57A1.)

WARNING

- Motors which have been damaged, or if damage is suspected, will be disposed of by EOD.

WARNING

- The motor contains hazard class/division 1.1 explosive (CHY and DDP propellant) and a high-order detonation will occur.

a. Inspect motor to ensure that explosive components (S/A device, frangible sectors and igniters) have been removed.

b. Place explosive charge using one of the following methods:

(1) Place 6.82 kilogram (15 pound) M2A3 shaped charge against side of motor case.

(2) Pack approximately 2.73 kilograms (six pounds) of Composition C into igniter well.

c. Prime explosive charge using electric or nonelectric firing system in accordance with Section IV.

d. Retire to proper distance.

e. Effect detonation.

7-23. METHOD 15. (Solid Propellant Gas Generators (SPGG).)

a. Static Firing:

(1) Prepare pit.

(2) Mechanically rupture diaphragm.

(3) Connect electrical leads to initiator/igniter.

(4) Carefully place SPGG in pit, orifice end up. Tamp earth around SPGG.

(5) Retire to proper distance.

(6) Effect ignition.

NOTE

The alternate method of static firing will be used if the initiator/igniter is not present or if a misfire has occurred due to malfunction of initiator/igniter.

b. Alternate Static Firing:

(1) Prepare pit.

(2) Carefully place SPGG in pit, orifice end up. Tamp earth around SPGG.

(3) Mechanically rupture diaphragm.

(4) Prepare for detonation using electric or nonelectric firing system in accordance with Section IV.

(5) Insert electric or nonelectric blasting cap into exposed orifice.

(6) Retire to proper distance.

(7) Effect detonation.

c. Detonation/Burning:

(1) Prepare a pit at least 0.92 meter (three feet) square and 0.92 meter (three feet) deep.

(2) Place SPGG lengthwise in pit.

(3) Place 1.27 centimeters (1/2 inch) diameter molded strip of Composition C in top centerline of SPGG.

(4) Prime Composition C using electric or nonelectric blasting cap firing system in accordance with Section IV.

(5) Cover pit with pierced steel planking or suitable substitute.

(6) Retire to proper distance.

(7) Effect detonation.

(8) Check for explosive residue and dispose of by burning in pit.

7-24. METHOD 16. (Hypergolic Igniter.)

WARNING

- Flameproof coveralls or full length flameproof aprons, face shields, and impermeable gloves will be worn when disposing of hypergolic igniters.
- Self-contained breathing apparatus, asbestos gloves and first aid kits containing burn ointment will be readily available.
- The contents of hypergolic igniters are highly volatile. When hypergolic igniters are received for disposal in containers filled with mineral oil, precautions will be taken to prevent contamination by water.
- The fumes from burning hypergolic igniters are highly toxic.

a. Burning:

(1) Place 0.31 meter (one foot) layer of combustible material on the ground ensuring that material will extend approximately 0.31 meter (one foot) beyond igniters to be disposed of.

(2) Place igniters on combustible material.

(3) Saturate combustible material with fuel oil.

(4) Place additional combustible material on top of igniters and saturate with fuel oil.

(5) Prepare ignition train in accordance with section IV.

(6) Effect ignition from upwind side.

(7) Retire to proper distance.

b. Detonation/Burning.

(1) Tape two electric blasting caps across exposed diaphragm end of igniter.

(2) Connect caps in series.

(3) Prepare for detonation using electric or nonelectric firing system in accordance with section IV.

(4) Retire to proper distance.

(5) Effect detonation.

7-25. METHOD 17. AGM-69A (SRAM) Motor, SR75-LP-1, BGM-109G Rocket Motor (GLCM).

NOTE

The procedures apply with or without igniters and nozzle installed.

a. Place motor on ground with race way channel in up position.

NOTE

The SRAM rocket motor contains two separate propulsion systems (boost and sustain).

b. Mold Composition C into a worm 1.91 centimeters (3/4 inch) in diameter and place full length of the motor case at 30 degrees from top center.

c. Mold additional Composition C into a 1.91 centimeters (3/4 inch) worm and place halfway around motor case at approximately 0.20 meter (eight inches) from forward dome bolt flange of motor and 0.20 meter (eight inches) from aft bolt flange (nozzle end).

d. Prime Composition C using electric nonelectric firing system in accordance with section IV.

e. Retire to proper distance.

f. Effect detonation.

g. Check for explosive residue and dispose of by burning using disposal method 3-5.

SECTION VIII

ROCKET MOTORS AND WARHEADS

8-1. GENERAL.

8-2. Rocket motors and warhead disposal procedures are covered in this section. Disposal procedures are listed herein and the appropriate paragraph number given in DISPOSAL PARAGRAPH column of the table.

8-3. SAFETY PRECAUTIONS.

8-4. General safety precautions and general requirements pertaining to disposal ranges, personnel, etc., will be adhered to at all times. Any additional precaution/requirement pertaining to a specific item is listed in the appropriate disposal method.

Table 8-1. Rocket Motors and Warheads

ITEM	NOMENCLATURE	PART NO.	DISPOSAL PARAGRAPH
1	Motor 2.75 inch MK4 MK40	9220804 9220803	8-6 8-6
2	Motor 5.0 inch MK 10 and Mods	655914	8-6
3	Motor, SR49-TC-1 (AIR-2A)	5685242-523 5685242-525	8-7 8-7
4	Motor, SR-45-AR-1 (PWN-6A and PWN-7A)	2313123	8-8
5	Motor, SR-71-AD-1 (PWN-8B)	67D47300	8-9
6	Motor, SR-110-AD-1 (PWN-10A, -10B 10C, -11A and -12A)	70J2222	8-9
7	Motor, JATO, 14-DS-1000	8796522	8-10
8	Motor, JATO, 15-KS-1000	2000087	8-11
9	Motor, JATO, 16-NS-1000	A02A001	8-12
10	Motor, JATO, 2.2-KS-11,000, M77A1 MK23 Mod 1	2516421 LD620850	8-13 8-13

Table 8-1. Rocket Motors and Warheads (Cont)

ITEM	NOMENCLATURE	PART NO.	DISPOSAL PARAGRAPH
11	Warhead 2.75 inch MK 1	656227	8-15
	MK 5	1350663	8-15
	M151	8882186-2	8-15
	WDU-4A/A	67D9700	8-15
	WDU-13A	9259995	8-15
12	Warhead 5.0 inch MK 6	561527	8-15
	MK 25	563481	8-15

8-5. ROCKET MOTOR DISPOSAL PROCEDURES.

8-6. METHOD 1. (MK 4, MK40 and MK 10.)

WARNING

Nitroglycerin fumes will cause headaches/nausea. If headaches/nausea occur cease operation and retire to an area away from propellant grains until symptoms subside.

NOTE

- Damaged rocket motors which cannot be disassembled or removed from shipping containers/launchers will be destroyed by EOD.
- Nozzle plates and fin assemblies will be inspected and certified in accordance with T.O. 11A-1-60.

a. Disassemble motors as follows:

(1) 2.75 inch, MK 4 and MK 40:

(a) Pull lock wire.

(b) Remove nozzle plate and fin assembly.

(c) Cut and short ignite wires.

(2) 5.0 Inch HVAR:

(a) Remove shipping cap and felt pads.

(b) Remove closing cap.

(c) Cut and short igniter wires.

WARNING

Igniters and propellant will be disposed of separately. No attempt will be made to dispose of both in the same operation.

NOTE

5.0 inch HVAR igniters must be removed prior to removing propellant.

b. Remove propellant grain.

NOTE

Igniters will remain in water until time of disposal.

c. Remove igniter and submerge in container of water. Igniters will be disposed of by burning in pit (paragraph 3-6).

d. Lay a bed of combustible material ensuring that material will extend not less than one foot beyond grains to be disposed of.

e. Place grains on combustible material end to end in a line. If more than one line is formed, lines will be approximately 0.31 meter (one foot) apart.

f. Prepare ignition train in accordance with Section IV.

g. Effect ignition in accordance with Section IV.

h. Retire to proper distance.

8-7. METHOD 2. (SR49-TC-1).

NOTE

- Disassembly operations will be accomplished in approved facilities, with safety pin installed, until electrical assembly is removed.
- Report serviceable components removed in subparagraphs a. and b. to OO-ALC (MMW), Hill AFB, Utah 84056, for disposition.

a. Remove fin assemblies, fin actuating assemblies, fairings and electrical assembly in accordance with T.O. 11A11-25-7.

WARNING

Do not attempt to dispose of motors with exit cones installed. The thrust developed by the motor is sufficient to propel the motor deeper into the ground, and if an obstacle is encountered the motor's direction of travel can be altered in such a manner that the motor could become airborne.

b. Remove exit cone by removing setscrew and unscrewing cone from motor aft closure assembly.

c. Prepare a hole in firm ground at least 1.22 meters (48 inches) deep and of sufficient diameter to accommodate motor.

d. Install a serviceable MXU-35/A igniter in motor igniter boss at forward end of motor, with lead wires of sufficient length to ensure safe operation. Tape lead wires to motor case.

e. Bury motor vertically up to aft closure (approximately 48 inches). Tamp fill dirt firmly around rocket motor.

f. Prepare electrical firing system in accordance with section IV.

g. Retire to proper distance.

h. Effect detonation.

8-8. METHOD 3. (SR-45-AR-1.)

a. Burn on the Surface.

(1) Remove snap retaining ring from inside forward end of rocket motor.

(2) Carefully slide propellant grain with attached separation device from motor case.

(3) Lay a bed of combustible material ensuring that material will extend not less than one foot beyond grains to be disposed of.

(4) Place grains on combustible material approximately one foot apart.

(5) Prepare ignition train in accordance with Section IV.

(6) Effect ignition in accordance with Section IV.

(7) Retire to proper distance.

b. Detonation.

(1) Place motor on ground surface.

(2) Mold an M5 block of Composition C, or equivalent, into a worm and place on top centerline of motor running full length of motor case.

(3) Prime Composition C using electric or nonelectric blasting cap firing system in accordance with Section IV.

(4) Retire proper distance.

(5) Effect detonation.

(6) Gather any unconsumed pieces of propellant and dispose of by burning.

8-9. METHOD 4. (SR-71-AD-1.)

NOTE

This rocket motor contains a cast-in-case propellant grain which is bonded to interior of case.

a. Burning.

(1) Prepare a hole in firm ground at least 1.68 meters (66 inches) deep for SR-71 and 2.24 meters (80 inches) deep for SR-110 and of sufficient diameter to accommodate motor.

(2) Place a 0.64 centimeters (1/4 inch) thick metal plate approximately 20.32 centimeters (eight inches) square in bottom of hole.

(3) Place rocket motor in hole with forward end against the metal plate. Fill and tamp dirt firmly around motor until only nozzle is exposed.

(4) Install a serviceable igniter.

(5) Retire to proper distance.

(6) Initiate igniter by electrical means.

b. Detonation.

(1) Place motor on ground surface.

(2) Mold an M5 block of Composition C, or equivalent, into a worm and place on top centerline of motor, running full length of motor case.

(3) Prime Composition C using electric or nonelectric blasting cap firing system in accordance with Section IV.

(4) Retire proper distance.

(5) Effect detonation.

(6) Initiate igniter by electrical means.

c. Detonation.

(1) Place motor on ground surface.

(2) Mold an M5 block of Composition C, or equivalent, into a worm and place on top centerline of motor, running full length of motor case.

(3) Prime Composition C using electric or nonelectric blasting cap firing system in accordance with Section IV.

(4) Retire proper distance.

(5) Effect detonation.

(6) Gather any unconsumed pieces of propellant and dispose of by burning.

8-10. METHOD 5. (JATO, 14-DS-1000.)

WARNING

Igniters will be removed prior to disposal of motors. If igniters are not removed, motors may become propulsive.

a. Remove shipping plug or igniter from igniter well of rocket motor, if installed.

b. Using a small hardwood stick or nonsparking tool approximately 1.27 centimeters (1/2 inch) in diameter, puncture and remove plastic nozzle closure.

NOTE

When burning two or more rows, the rows will be parallel and separated by not less than 15.25 meters (50 feet).

c. Place motors in a row, igniter end to nozzle end, on their mounting brackets for stability and ease of alignment. The igniter opening of one motor will be aligned with and fit against nozzle opening of adjoining motor.

d. Prepare ignition train in accordance with Section IV.

e. Effect ignition in accordance with Section IV.

f. Retire to proper distance.

8-11. METHOD 6. (JATO, 15KS-1000.)

a. Procedure 1.

(1) Disassemble as follows:

(a) Remove retaining ring screws with a screwdriver or chisel and hammer.

(b) Remove aft shipping cap or any other obstruction from nozzle end.

(c) Using a small hardwood stick or nonsparking tool approximately 1.27 centimeters (1/2 inch) in diameter, puncture and remove weather seal from nozzle well.

(d) Remove frangible shipping cap or igniter, if present.

NOTE

The jig is fabricated locally in accordance with figures 8-1 and 8-2.

(e) Place rocket motor in jig (figures 8-1 and 8-2) with nozzle end up. Apply pressure on nozzle end and compress aft cap assembly into main body approximately 3.2 centimeters (1/8 inch). Remove retaining ring with screwdrivers. Release pressure from nozzle end and remove motor from jig.

(f) Remove aft cap assembly and propellant grain from motor body.

(2) Lay a bed of combustible material ensuring that material will extend not less than 30.4 centimeters (one foot) beyond grains to be disposed of.

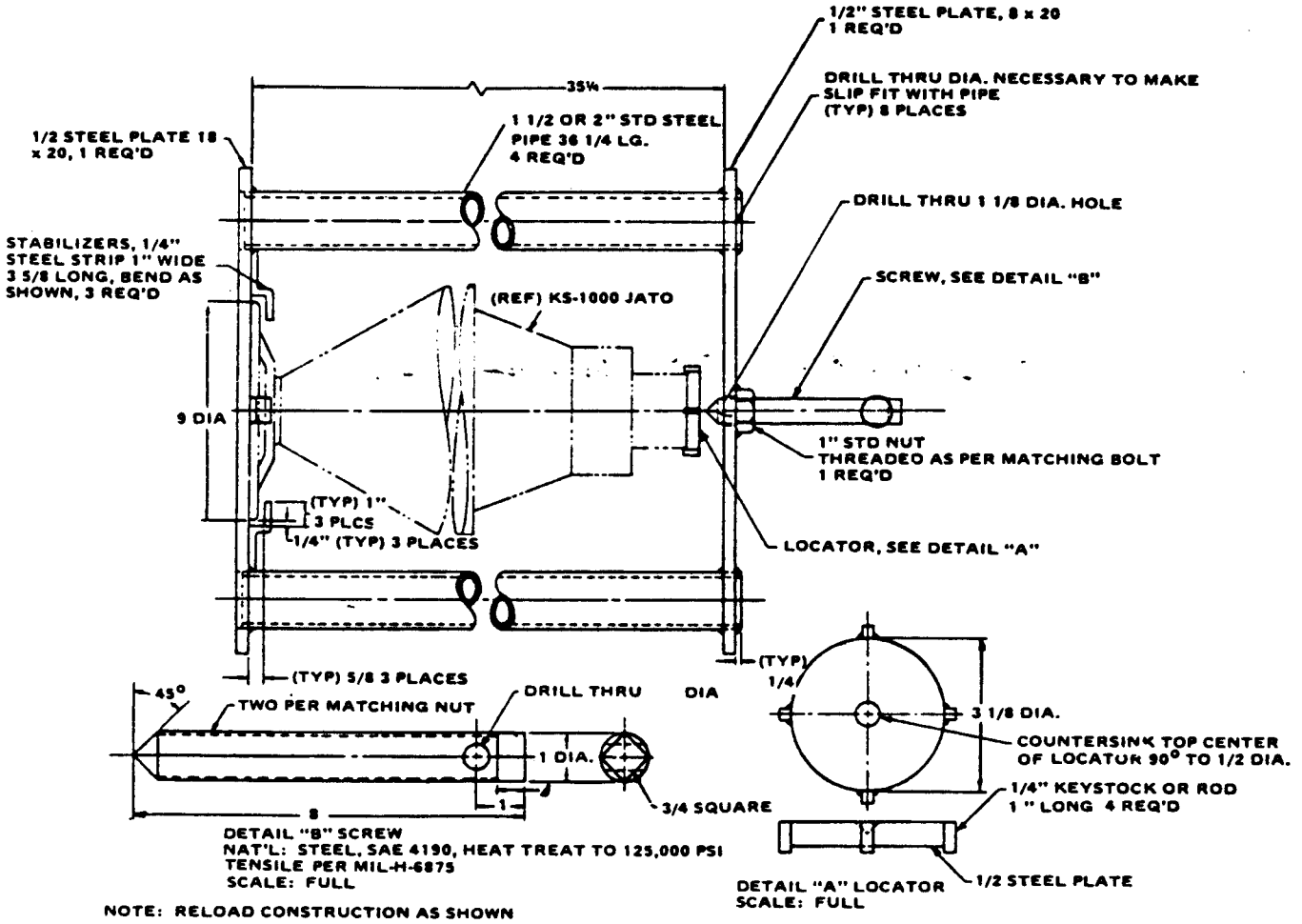

Figure 8-1. Jig, JATO Disassembly 15-KS-1000

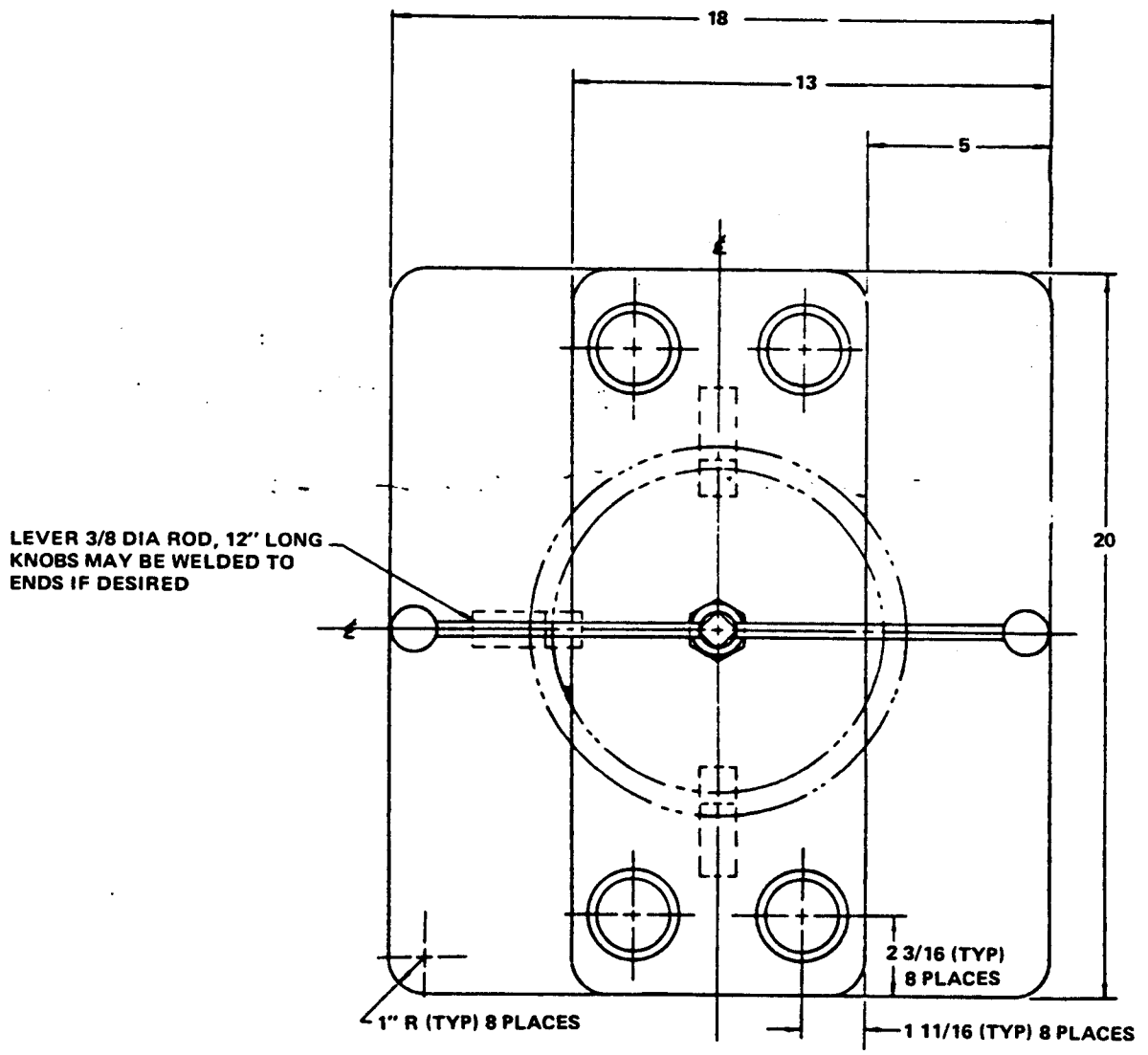

Figure 8-2. Jig, JATO Disassembly 15-DS-1000 (Top View)

(3) Place propellant grains on combustible material.

(4) Prepare ignition train in accordance with Section IV.

(5) Effect ignition in accordance with Section IV.

(6) Retire to proper distance.

b. Procedure 2.

NOTE

If retaining ring and propellant grain cannot be removed, the motor will be disposed of as follows:

(1) Remove frangible shipping cap or igniter, if present and serviceable, from igniter well of rocket motor.

WARNING

When motors are burned individually utilizing a hole in the ground, care must be exercised to ensure that igniter end is securely closed with an expended or unserviceable igniter to prevent escape of gases. Gas escapement at igniter will cause motor to become propulsive. The frangible shipping cap with which igniter opening is closed during shipment is too weak to withstand pressures developed by a burning motor.

(2) Install an expended or unserviceable igniter in igniter well and tighten.

(3) Prepare pit approximately 0.76 meter (30 inches) deep.

(4) Place motor in vertical position, nozzle end up, in pit so that nozzle is above ground surface. Tamp earth firmly around motor.

(5) Remove aft shipping cap or any other obstruction from nozzle end.

(6) Using a small hardwood stick or nonsparking tool approximately 1.27 centimeters (1/2 inch) in diameter, puncture and remove weather seal from nozzle well.

(7) Prepare ignition train in accordance with Section IV.

(8) Effect ignition in accordance with Section IV.

(9) Retire to proper distance.

8-12. METHOD 7. (JATO, 16NS-1000.)

WARNING

Igniters will be removed prior to disposal of motors. If igniters are not removed, motors may become propulsive.

a. Remove shipping plug and O-ring or igniter, if installed.

b. Remove cap from nozzle, if installed.

c. Using a small hardwood stick or nonsparking tool approximately 1.27 centimeters (1/2 inch) in diameter, puncture nozzle closure and remove nozzle closure.

NOTE

When burning two or more rows, the rows will be parallel and separated by not less than 15.25 meters (50 feet).

d. Place motors in a row, igniter end to nozzle end, on their support brackets for stability and ease of alignment. Igniter opening of one

motor will be aligned with and approximately 0.15 meter (six inches) away from nozzle opening of adjoining motor.

e. Prepare ignition train in accordance with Section IV.

f. Effect ignition in accordance with Section IV.

g. Retire to proper distance.

8-13. METHOD 8. (JATO, 2.2-KS-11,000; M77A1 and MK 23 Mod 1)

a. Place motor on ground in a horizontal position.

b. Punch out aft copper closure disc with a wooden stake or other nonmetallic object.

c. Prepare three thermite grenades as follows:

(1) Electric Initiation. Prepare grenades as follows:

(a) Connect three electric blasting caps in series and connect to firing line in accordance with Section IV.

(b) Raise safety lever and place an electric blasting cap between each grenade body and safety lever and tape in place.

(2) Electric/Nonelectric Initiation. Prepare grenades as follows:

(a) Carefully remove fuzes from three thermite grenades. Temporarily store fuzes in a safe area.

(b) Cut three equal lengths of detonating cord approximately 1.22 meters (four feet) in length.

(c) Insert one end of detonating cord into each of the grenades until it is touching the first fire mixture and tape in place.

(d) Tape the other ends of detonating cord together and prepare for firing in accordance with Section IV, either electrically or nonelectrically.

d. Securely tape three prepared thermite grenades parallel and top center line of motor body; one centered, one adjacent to forward ring, and one adjacent to aft ring.

e. If applicable, tape removed grenade fuzes securely to motor body adjacent to one of the grenades.

NOTE

- Ensure that dam is of sufficient height and tamped firmly enough to retain molten thermite around motor case.
- Do not place any earth/sand in motor forward of aft openings.

f. Shovel earth/sand around motor and shape and tamp to form a dam around each grenade.

g. Retire to proper distance.

NOTE

Grenades will ignite and burn through motor case in approximately 1-1/2 minutes, igniting propellant which will burn completely in approximately 3 to 5 minutes.

h. Effect ignition.

i. Inspect and certify generated scrap metal in accordance with T.O. 11A-1-60.

8-14. ROCKET WARHEAD DISPOSAL PROCEDURE.

8-15. METHOD 9. (Warheads)

WARNING

No attempt will be made to remove base detonating fuzes from 5.0 inch warheads. Nose fuzes will not be removed from the 2.75 inch warheads.

NOTE

See Chemical Munitions for disposal of M156 warhead which contains 0.97 kilogram (2.125 pounds) of White Phosphorus.

a. Prepare a pit at least 1.22 meters (four feet) deep.

b. Place warheads horizontally in pit.

c. Place explosive by one of the following methods.

(1) Place approximately 0.55 kilogram (1/4 pound) of Composition C, or equivalent, in contact with side of each warhead.

(2) For Flechette warheads, place approximately 0.55 (1/4 pound) of Composition C, or equivalent, at the base of each warhead.

(3) Fill fuze cavity of 5.0 inch warhead with Composition C.

d. Prime Composition C with detonating cord.

e. Cover warheads with at least 0.61 meter (two feet) of earth to decrease fragments.

f. Prepare for detonation using electric or nonelectric firing system in accordance with Section IV.

g. Retire to proper distance.

h. Effect detonation.

SECTION IX

AIRCRAFT EGRESS ITEMS

9-1. GENERAL.

9-2. Aircraft egress items disposal procedures are covered in this section. Disassembly procedures and disposal methods are listed herein and reference to appropriate paragraphs are made in table 9-1. If an item is not listed in the table, specific instructions will be provided on ADR. Disposition of recoverable items will also be supplied on ADR. Inert items/scrap metal generated from disassembly and/or disposal operations will be inspected and certified in accordance with T.O. 11A-1-60.

Table 9-1. Aircraft Egress Systems Items (Sheet 1 of 8)

ITEM	NOMENCLATURE	PART NUMBER	DISASSEMBLY	DISPOSAL PARAGRAPH
1	Activator:			
	Pendant Disconnect	365023-5, -7	9-6	9-31
	Pendant Disconnect	365323-1	9-7	9-31
2	Actuator:			
	Parachute, Time Delay	All	9-8	4-37
	Model 7000			9-37
	Model 11000			9-31
	Explosive, Linear			9-31
	Rotary	1000 Series	9-9	9-31
3	Battery, Gas Actuated	All		9-31
	Thermal	2204100		9-31
4	Bolt, Explosive	All		9-31
5	Cartridge, Actuating Device			
	Canopy Thruster	2197200		9-31
	Cartridge Set	2519696		9-31
	Delay, CCU-4/A	234AS100		9-31
	Delay	163-200-1		9-31
	Delay	163-500-1		9-31
	Delay	5750-3		9-31
	Delay, MK4 Mod 1	534546		9-31
	Delay, MK4 Mod 2	2519703		9-31
	Delay, MK5 Mod 1	534548		9-31
	Delay, MK5 Mod 2	2519704		9-31
	Delay, MK36	2164485		9-31
	Delay, MK86	534545		9-31
	Delay, MK136	2519923		9-31
	Delay, MK141	2519935		9-31
	Delay, MK142	2519943		9-31
	Delay, 0.40 Sec	21291700		9-31
		21291700-1		9-31
		1133-1		9-31
	Delay	52-400-1		9-31
	Delay, 0.30 Sec	2129300 and -1		9-31
		1132-1		9-31
	Delay, CCU-42A	1040AS100		9-31
	Delay	8044-2		9-31

Table 9-1. Aircraft Egress Systems Items (Sheet 2 of 8)

ITEM	NOMENCLATURE	PART NUMBER	DISASSEMBLY	DISPOSAL PARAGRAPH
	Delay, 4.0 Sec	6022100		9-31
	Delay, 1.0 Sec	6046100		9-31
	Delay, 0.25 Sec	6047100		9-31
	Delay, 0.5 Sec	6048100		9-31
	Delay, 2.0 Sec	6060100		9-31
	Delay, 0.75 Sec	6061100		9-31
	Drogue	1003-24		9-31
	Drogue	MBEU-7536		9-31
	Impulse, MK14	491824		9-31
	Impulse, MK47 Mod 0	419700		9-31
	Impulse, MK49 Mod 0	534539		9-31
	Impulse, MK49 Mod 0	534529		9-31
	Impulse, PPC-13	939907-3		9-31
	Impulse	6901003		9-31
	Impulse	200034		9-31
	Impulse, Canopy Remover	22973000-0		9-31
	Impulse, Canopy Remover	22973001-2		9-31
	Impulse, Canopy Remover	2404300-1		9-31
	Ejection Seat, Trainer	- -		9-31
	Guillotine	2103300		9-31
		2103400		9-31
		2103600		9-31
		MBEU-16650		9-31
	Igniter, Rocket Motor	MBEU-2250RU		9-31
		759AS103		9-31
	Harness Release	1002-41		9-31
	Mortar	1005-3		9-31
	Kit Deploy	140121-1		9-31
	Primary	MBEU-26434		9-31
	Secondary	MBEU-29231		9-31
	Parachute Spreading Gun	SK860016-1		9-31
	Pressure	876564		9-31
	Recovery	2209100		9-31
	Retractor	21341600		9-31
		21342400		9-31
	Stabilizing Chute	2208100		9-31
	Booster Cartridge	6010600		9-31

Table 9-1. Aircraft Egress Systems Items (Sheet 3 of 8)

ITEM	NOMENCLATURE	PART NUMBER	DISASSEMBLY	DISPOSAL PARAGRAPH
6	Catapults			
	M3A1	8593635	9-10	9-31, 9-33
	M4A1	8593609	9-10	9-31, 9-33
	M5A1	8593686	9-10	9-31, 9-33
	M9	8596866		9-31, 9-33
	Rocket, CKU-8/A	5184875	-	9-31, 9-33
	Rocket	10006-27		9-31, 9-33
	Rocket	10100 Series	9-11	Cartridge 9-31 Motor 9-32 Complete Assy, 9-34
	Rocket	2124-19	9-12	Cartridge 9-31 Motor 9-32, 9-34
	Rocket, CKU-2/A	11743866		9-31, 9-33
	Rocket, CKU-5/A	11743975		9-31, 9-33
	Rocket, CKU-7/A	11820361		9-31, 9-33
	Rocket	1001 Series		9-33
		2174-518-7	9-13	Cartridge 9-31
		2174-520-7	9-13	Motor 9-32
		2174-522-7	9-13	Complete Assy 9-34
		2174-518-9	9-14	Cartridge 9-31
		2174-520-9	9-14	Motor 9-32
		2174-522-9	9-14	Complete Assy 9-34
		2400 Series	9-15	Cartridge 9-31 Motor 9-32 Complete Assy 9-34
	Rocket	2174-518-13		9-33
		2174-522-13		9-33
		2174-533-13		9-33
7	Connector, Explosive	All for F-111		9-31
8	Cord Assembly, Shielded, Mild, Detonating	All for F-111 F-15 & AC-130H		9-31

Table 9-1. Aircraft Egress Systems Items (Sheet 4 of 8)

ITEM	NOMENCLATURE	PART NUMBER	DISASSEMBLY	DISPOSAL PARAGRAPH
9	Cord, Detonating Assembly	All		9-31
10	Cover Assembly	All for F-111		9-31
11	Cutter			
	M8	---	9-16	9-31
	Cable	60065-3		9-31
	Canopy	353544-1		9-31
		363544-2		9-31
		367530-31 (YPC-R-R-92)		9-31
		367530-33 (YPC-R-R0327)		
	Locking Cord	ISE172-4.0		9-31
	Survival Kit			
	Parachute Static Line	52-3		9-31
	Seat Static Line	52-1		9-31
	Release	---		9-31
	Reefing Line	ISE-171-2.5		9-31
	Reefing Line	ISE-172-1.15		9-31
12	Destructor Assembly			9-30
13	Destructor, Explosive	SKD538-76		9-30
14	Detonating Transfer Assy	16K0341 Series		9-31
		16K2038 Series		9-31
		51092 Series		9-31
15	Detonation Assy	51064 Series		9-31
16	Detonator Assy	4A3056-1		9-31
17	Drogue, FLSC Severance	811318-4		9-31
18	Ejector, Parachute	163-3		9-31
19	Extraction, Rocket and Launcher	All		9-31
20	Firing Device, Explosive	363541-1 (90202 -1)		Inert

Table 9-1. Aircraft Egress Systems Items (Sheet 5 of 8)

ITEM	NOMENCLATURE	PART NUMBER	DISASSEMBLY	DISPOSAL PARAGRAPH
21	Firing Mechanism	1225-4		9-31
		29378-1		9-31
		50057-1		9-31
22	Flexible Linear Shaped Charge	All for F-111 & AC-130H		9-30
23	Flexible Linear Shaped Charge, Drogue	811318-2		9-30
24	Gas Container w/squib	10068C-0002		6-7
25	Generator			
	Gas	1293-157		9-30
	Gas	807207		9-31, 9-30
	Gas, M17	10522490	9-17	9-31, 9-30
	Gas, Gyro Spin Up	1004-3		9-31, 9-30
26	Gun			
	Parachute Spreader	SK860051-1		9-37
	Drogue Chute	RA061D0012 Series	9-18	9-31
	Parachute Deployment Gun and Cable Assembly	807345 and 818345 Series	9-19	9-31
27	Igniter (CAD)			9-31
28	Initiator			
	M3	94-3-1	9-20	9-31
	M5	94-3-11	9-22	9-31
	M6		9-20	9-31
	M8	DLX-138-2	9-21	9-31
	M9	94-3-27	9-23	9-31
	M12	8593159	9-20	9-31
	M26	8597941	9-22	9-31
	M27	10520550	9-21	9-31
	M28	10520550	9-21	9-31
	M30	8595400	9-20	9-31
	M31	8595251	9-22	9-31
	M32	8595409	9-20	9-31
	M45	8596101	9-20	9-31
	M49 Series	10520232	9-20	9-31
	M53	10520621	9-23	9-31
	M64	10522498	9-21	9-31
	M72	10521631	9-22	9-31

Table 9-1. Aircraft Egress Systems Items (Sheet 6 of 8)

ITEM	NOMENCLATURE	PART NUMBER	DISASSEMBLY	DISPOSAL PARAGRAPH
28 (Cont)	Initiator (Continued)			
	M80	10522664	9-23	9-31
	M86	10522503	9-21	9-31
	M87	10522697	9-21	9-31
	M88 Series	10522364	9-22	9-31
	M89	10522698	9-21	9-31
	M99	10520405	9-21	9-31
	M104	10551446		9-31
	M110	10551587		9-31
	M113	11731474		9-31
	M114	11726503	9-22	9-31
	JAU2/A25	11731494		9-31
	JAU3/A25	11731674		9-31
	JAU4/A25	11731740		9-31
	JAU8/A25	11731737		9-31
	JAU9/A	11731482		9-31
	JAU-10/A25	11731484		9-31
	MK11 Mod 0	DL2518122		9-31
	Barostat	90166-5		9-31
	Cartridge Actuated	0113226	9-24	9-31
	Canopy Internal	2271700-2		9-31
	Canopy External	2271100		9-31
	SMDC/GAS	812666-9		9-31
	SMDC/GAS	812666-11		9-31
	GAS/SMDC	2293100		9-31
	Canopy Actuated	2271500-1		9-31
	One-Way Transfer	113355		9-31
	Time-Delay, .32 Sec	21200-1		9-31
	Time-Delay,. 40 Sec	813875-1		9-31
	Interdictor	816199-1		9-31
	Line Assy	816206-1		9-31
	Delay	1180-2		9-31
	Initiator	2650100		9-31
	Initiator	2651100		9-31
	Initiator	1007 Series		9-31
	Initiator	1008 Series		9-31
	Initiator	1153 Series		9-31
	Ejection	90363-1		9-31
	Explosive	809323-2		9-31
	Fitting	2095750-7		9-31
		2095850-8		9-31
	"G" Sensor	800850-9		9-31
	Inertia Reel	55-001-001		9-31

Table 9-1. Aircraft Egress Systems Items (Sheet 7 of 8)

ITEM	NOMENCLATURE	PART NUMBER	DISASSEMLY	DISPOSAL PARAGRAPH
28 (Cont)	Initiator (Cont)			
	Parachute Release	202-5-1		9-31
	Severance Flotation	202-4-5		9-31
	Time Delay	All for F-111		9-31
	Pressure Operated	2130300		9-31
		2130300-1		9-31
		1130-1		9-31
	0.75 Second Delay	21301900		9-31
		21301900-1		9-31
		1131-1		9-31
29	Line Assembly, Detonating	51062 Series		9-31
30	Line Assembly, Out-Put (Hivelite)	816202 Series		9-31
31	Line Assembly, Transfer	816204 Series		9-31
32	Lower Rotor	AC-130-H		3-6, 3-9
33	Manifold Assembly	363568-1		9-31
34	Manifold	363542-1 (90218-1)		9-31
		363542-2 (90210-1)		9-31
		363542-3 (90217-1)		9-31
35	Motor, Man/Seat Separator, 1033 Series			9-36
36	Primacord Assembly	272-6080159		9-31
37	Remover, Canopy	2218-18		9-30
	Canopy	2218-17		9-30
	Canopy, M4	8595439		9-30
	Canopy, M3A1	8593701		9-30
	Canopy, M1A3	8593731		9-30
	Canopy	2632100 Series		9-30
	Canopy	2820100 Series		9-30
	Canopy, M8A1	10522124	9-25	9-31
	Canopy, M9	10622539	9-26	9-31
	Canopy	2218 Series	9-27	9-31
38	Rocket Motor	MBEU-1850RU		9-31
		1175AS100		9-31
		2615-502		9-31
		759AS100		9-31
39	Rocket, Motor Stabilization	50436 Series		9-31
40	Rocket Trajectory, Divergence	1143-3		9-31

Table 9-1. Aircraft Egress Systems Items (Sheet 7 of 8)

ITEM	NOMENCLATURE	PART NUMBER	DISASSEMLY	DISPOSAL PARAGRAPH
41	Selector, Ejection Sequence	50905-3		9-31
42	Slide Block Assembly	90271-1		9-31
		90271-3		9-31
43	SMDC Line	AC-130-H		9-31
44	Transfer, Explosive	188-1-5		9-31
45	Thrusters	30247-3		9-31
	M1A2	8593854		9-31
	M3A3	10522629		9-31
	M5A2	8594746		9-31
	M6	8594149		9-31
	M7	8593277		9-31
	M9	10520478		9-31
	M11	10521565		9-31
	M13	10520971		9-31
	M15	10520875		9-31
	M16	10521321		9-31
	M17	8597496		9-31
	M18	8597514		9-31
	M20	FF9850		9-31
	M20A1	10533856		9-31
	M25	10434176		9-31
	M25A1	11730533		9-31
	M26	10551371		9-31
	Hatch	807268		9-30

☆U.S. GOVERNMENT PRINTING OFFICE: 1991 - 573-064/28 [illegible]

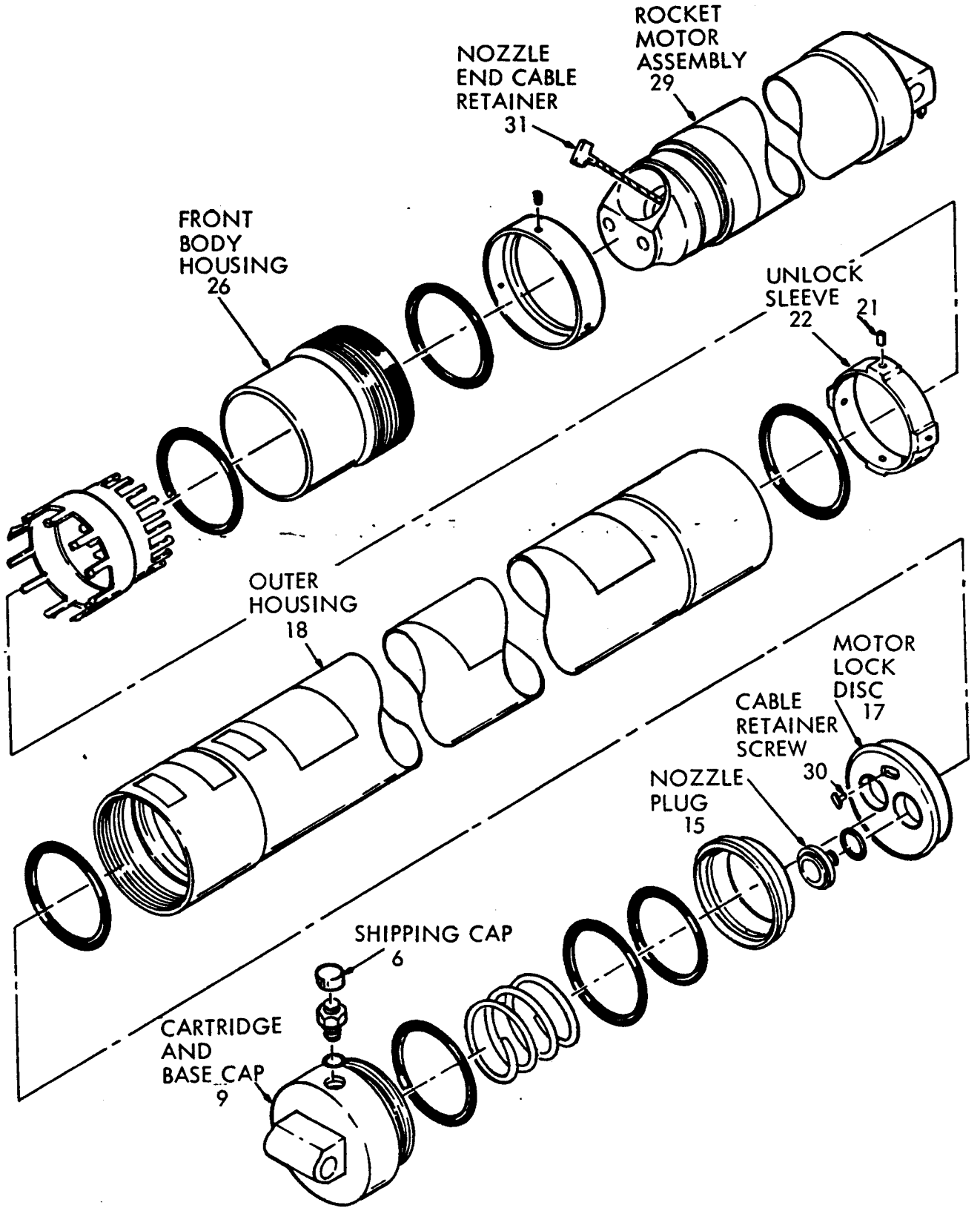

Figure 9-9. Rocket Catapult Assembly, Part No. 2174-518-9, -520-9, 522-9

g. Remove the two nozzle plugs (15) from the motor lock disc, and remove disc.

h. Using a spark proof drift punch and spark proof hammer, tap unlock sleeve (22), next to four shear pins, to cause pins to shear.

i. Slide unlock sleeve down to shoulder of lock and pad assembly and remove from the rocket motor nozzle.

j. Remove front body housing from rocket motor.

9-15. CATAPULT, ROCKET, 2400 Series, (figure 9-10) will be disassembled as follows:

WARNING

The rocket catapult as assembled is safe to handle; however, due to the cable activated rocket motor ignition system, disassembly of the rocket motor OUT of proper sequence rocket motor ignition, which could result in serious personnel injury.

NOTE

Perform the following task in the exact order presented.

a. Place the rocket motor assembly in a holding fixture and secure.

b. Remove and cap.

NOTE

If rocket motor is not configured with a cable igniter, proceed to subparagraph f.

c. Remove cable retainer screw from nozzle cup.

d. Slide the cable retainer sideways in keyhole slot of nozzle cup and push cable retainer through threaded hole to disengage.

e. Install a 0.25 to 0.50-inch long 1/4-20 standard cap screw into the nozzle cup to prevent cable retainer from reengaging in the keyhole slot.

f. Break and remove lockwire which secures four screws in piston housing.

WARNING

When removing screws, slowly relieve pressure from the compression spring to avoid instant spring extension.

g. Remove four screws which secure piston housing to catapult housing; and remove piston housing assembly.

NOTE

If rocket motor is not configured with a cable ignition system, proceed to subparagraph k.

h. Slide rocket motor aft (toward piston housing opening) until the nozzle cup has cleared the catapult housing.

i. Remove the nozzle cup.

WARNING

Do not pull the cable protruding from the nozzle as motor ignition could occur.

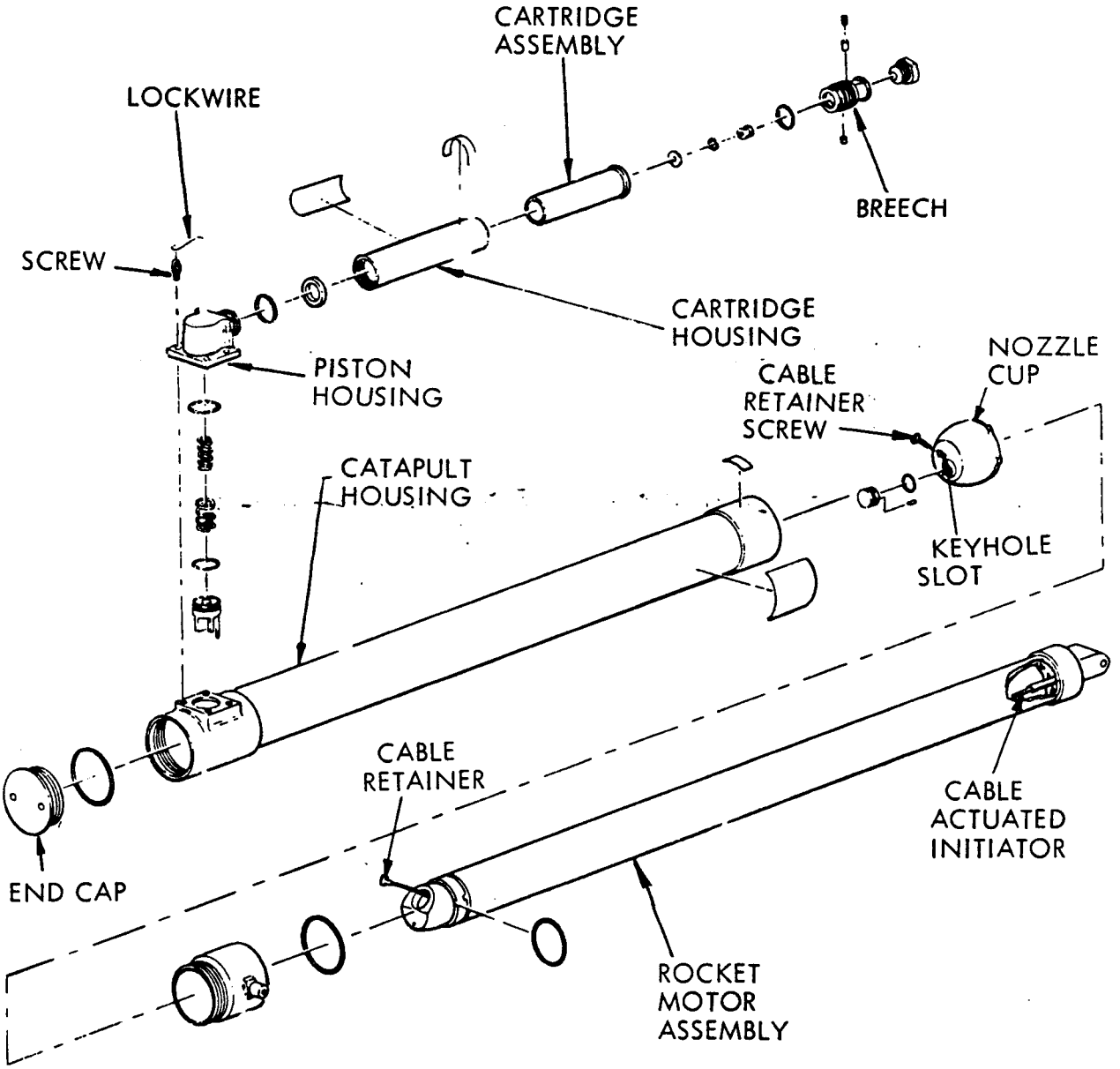

Figure 9-10. Rocket Catapult 2400 Series (Typical)

j. Place the cable into the nozzle and secure with tape to prevent accidently being pulled during handling.

k. Pull rocket motor assembly from catapult housing.

l. Unscrew breech from cartridge housing.

m. Remove cartridge assembly.

9-16. CUTTER, M8, (figure 9-11) will be disassembled as follows:

WARNING

Inadvertent functioning of the M8 cutter could cause injury or death to personnel and/or damage to equipment. Do not drop, jar or throw this unit or apply any source of pressure to the inlet port of this unit.

a. Ensure shipping plug is properly installed.

b. Unscrew head from body.

c. Remove cartridge.

9-17. GAS GENERATOR, M17, Part No. 10522490, (figure 9-12) will be disassembled as follows:

NOTE

The M17 gas generator is part of the MLU-24/B and the MLU-15/B parachute ejection cartridge kit (NSN 1377-00-966-5399-MY36 and NSN 1377-00-016-4805-MY37).

a. Ensure that pressure inlet port is properly plugged.

b. Remove setscrews from initiator cap.

c. Unscrew cap from chamber body.

d. Remove cartridge.

9-18. GUN, DROGUE CHUTE, Part No. RA061D0012 series, (figure 9-13) will be disassembled as follows:

WARNING

- Do not apply any source of pressure to the inlet port.
- Point housing away from all personnel during disassembly.

a. Ensure that pressure inlet port is properly plugged.

b. Unscrew cap.

c. Remove cartridge from housing.

9-19. PARACHUTE DEPLOYMENT GUN AND CABLE ASSEMBLY, Part No. 807345 and 818345 series, (figure 9-14) will be disassembled as follows:

WARNING

- Point barrel away from all personnel and toward a suitable barricade.
- If cable assembly conduit is severed or cut through, proceed as follows with subparagraph *b through *g. If conduit is not severed or cut through, disregard subparagraphs *b through *g.

a. Ensure that safety pin and streamer assembly are installed on cable assembly.

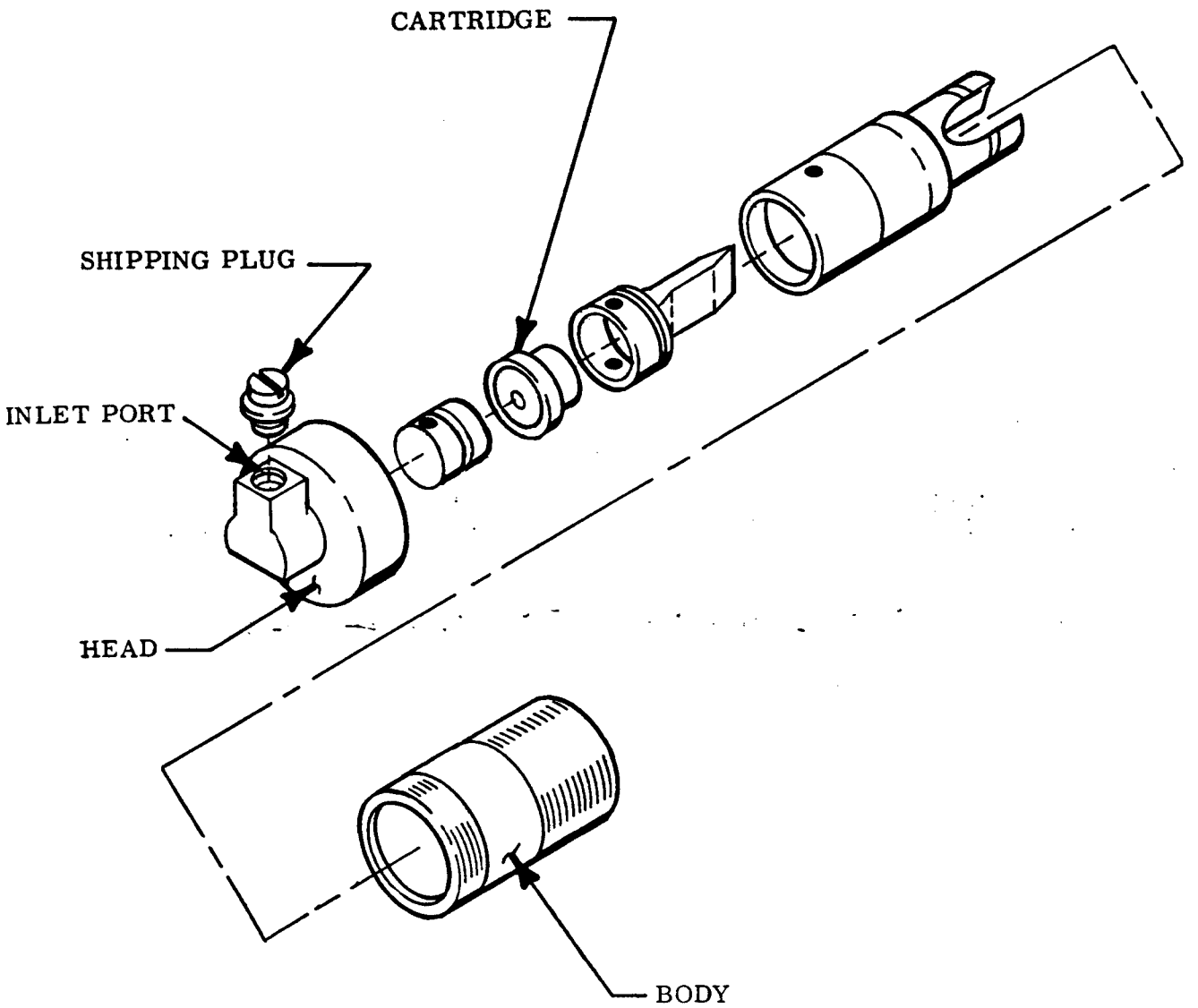

Figure 9-11. M8 Cutter

WARNING

Do not catch and pull on broken conduit end of cable assembly or pull on cable inside conduit during work in subparagraphs *b through *g.

*b. Cut safety wire between cable assembly attachment nut and gun assembly.

*c. Slowly back off cable assembly attachment nut with one hand while holding cable assembly conduit up against assembly. When nut is completely backed off gun assembly threads

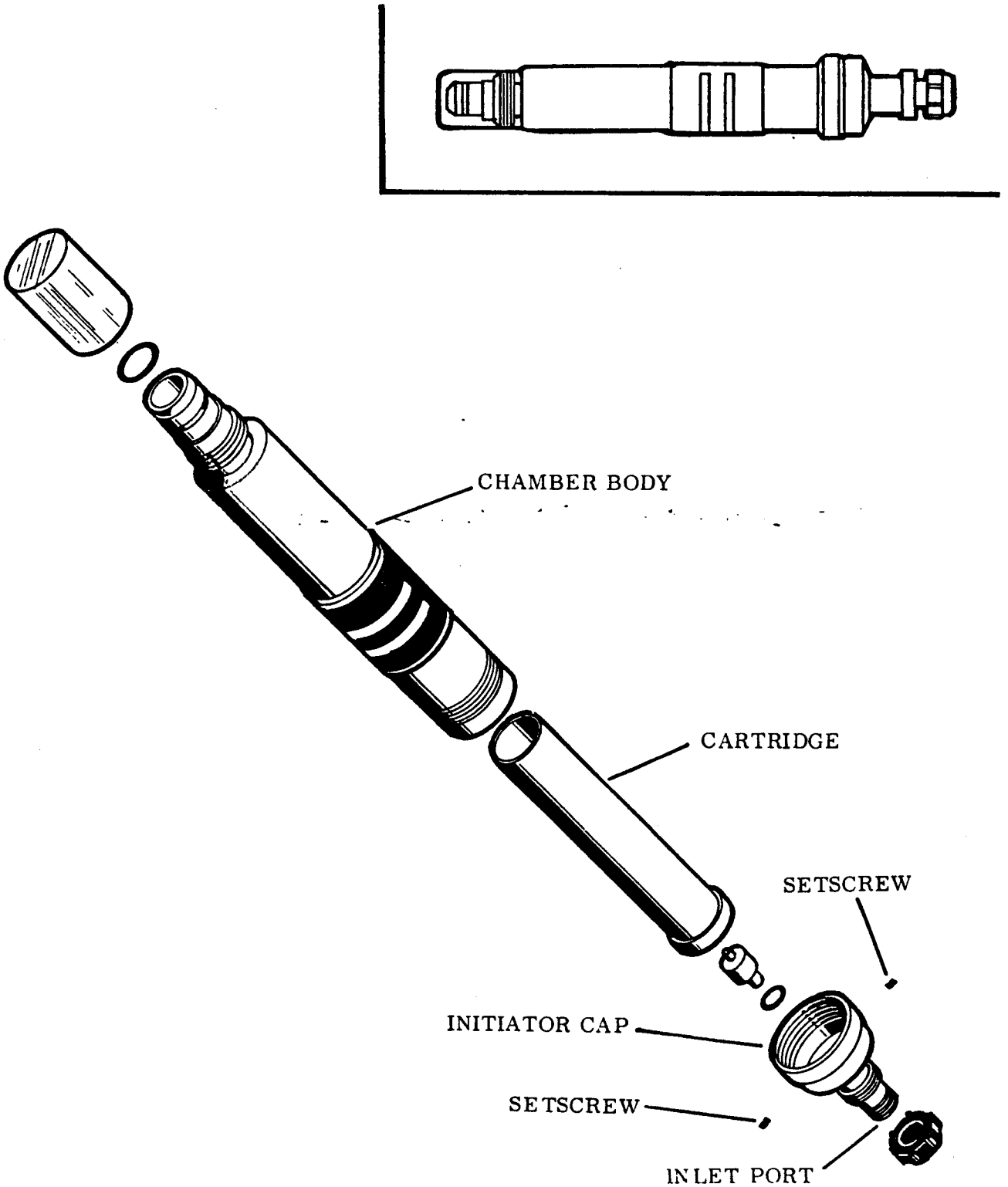

Figure 9-12. M17 Propellant Actuated Gas Pressure Generator

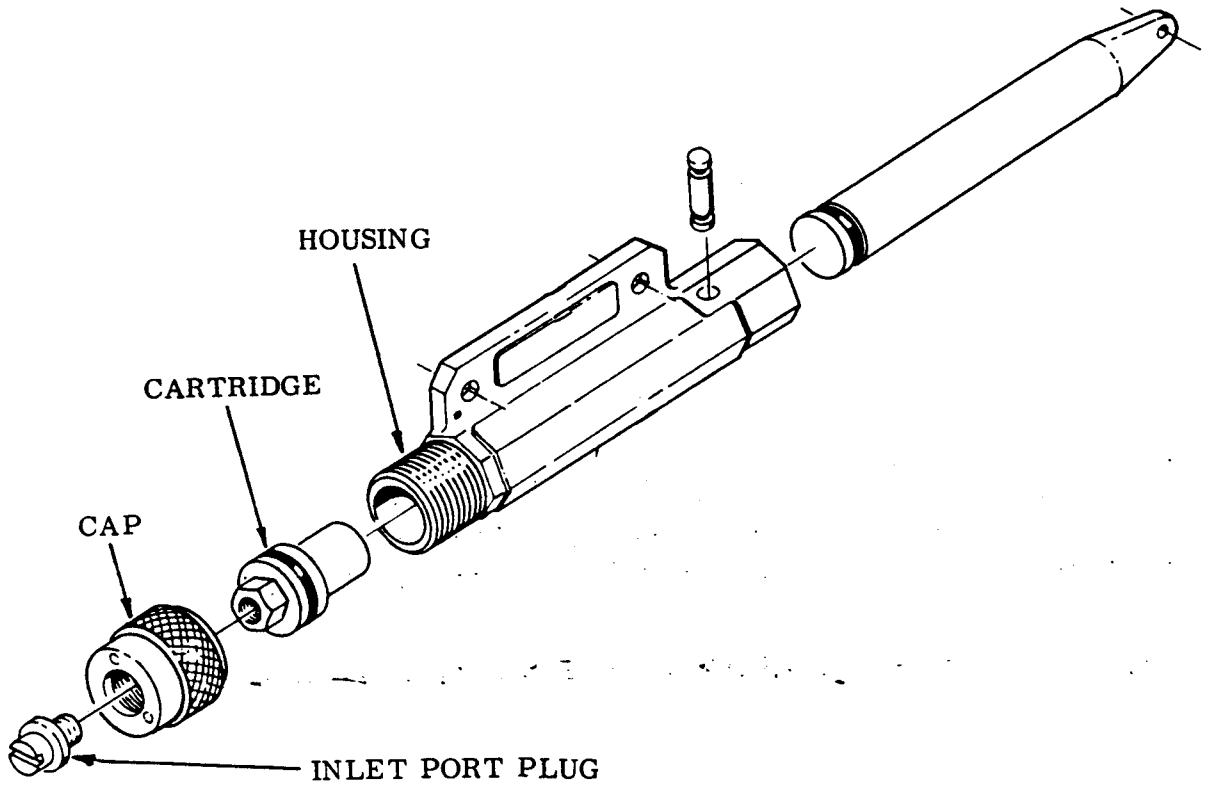

Figure 9-13. Part No. RA061D0012 Series Drogue Chute Gun (Typical)

and with flanged end of cable assembly conduit tight against gun assembly, lift cable assembly conduit straight out (parallel to work surface) approximately 0.32 centimeter (1/8-inch).

*d. Remove cable assembly.

*e. Cut cable in two at area where conduit is parted.

*f. Pull on cable assembly end fitting and remove cable from conduit.

*g. Install attachment nut and remaining part of conduit onto gun assembly. (If assembly is still installed in personnel parachute, remove unit from parachute at this time in accordance with applicable technical order.)

h. Remove shear pin from projectile and barrel.

i. Pull out projectile.

j. Utilizing a 1.27 centimeter (1/2-in) thin wall deep socket, unscrew cartridge counterclockwise.

9-20. INITIATORS, M3, M6, M12, M30, M32, M45, and M49 (figure 9-15) will be disassembled as follows:

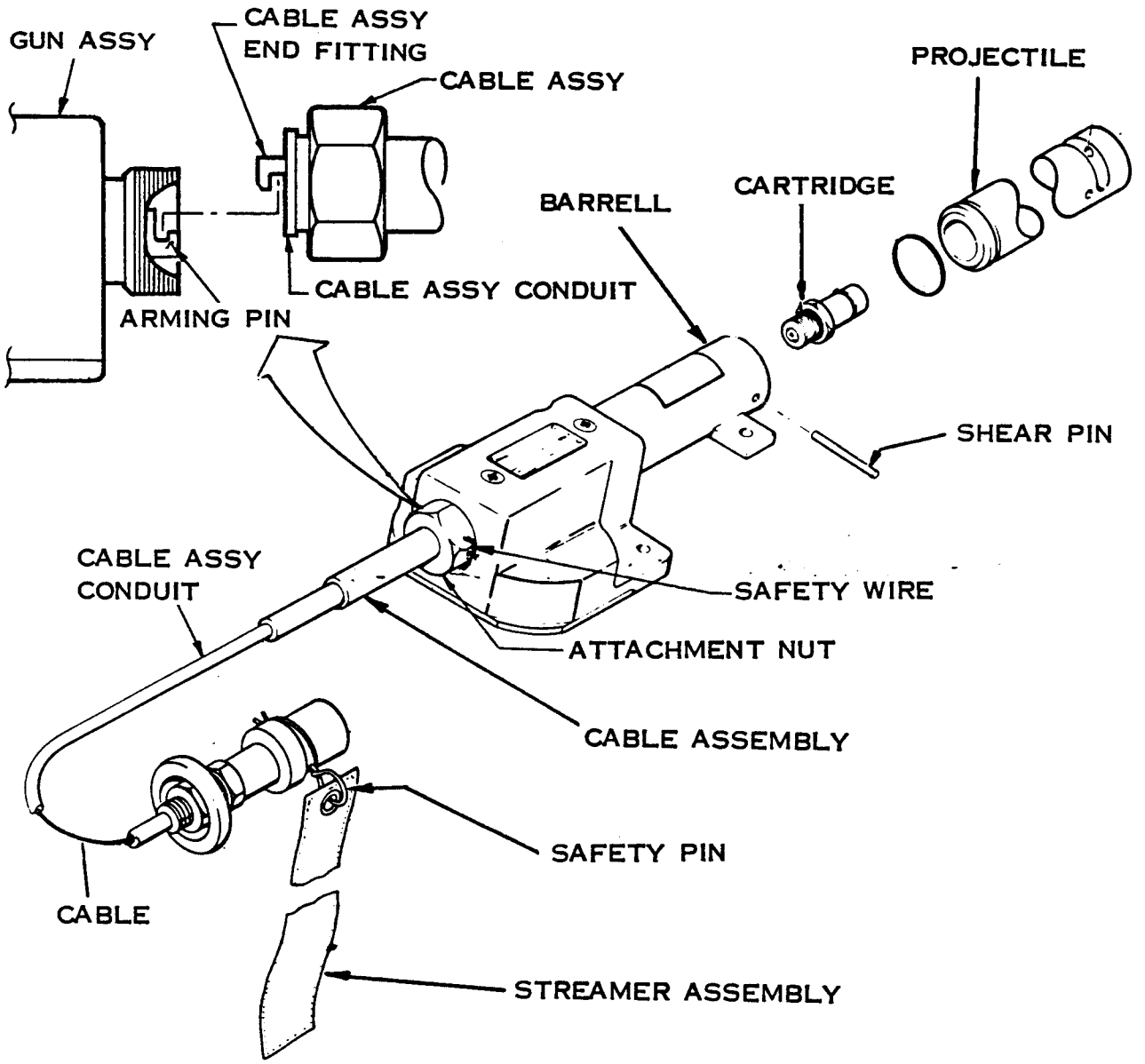

Figure 9-14. Part No. 807345 Series Parachute Deployment Gun and Cable Assembly (Typical)

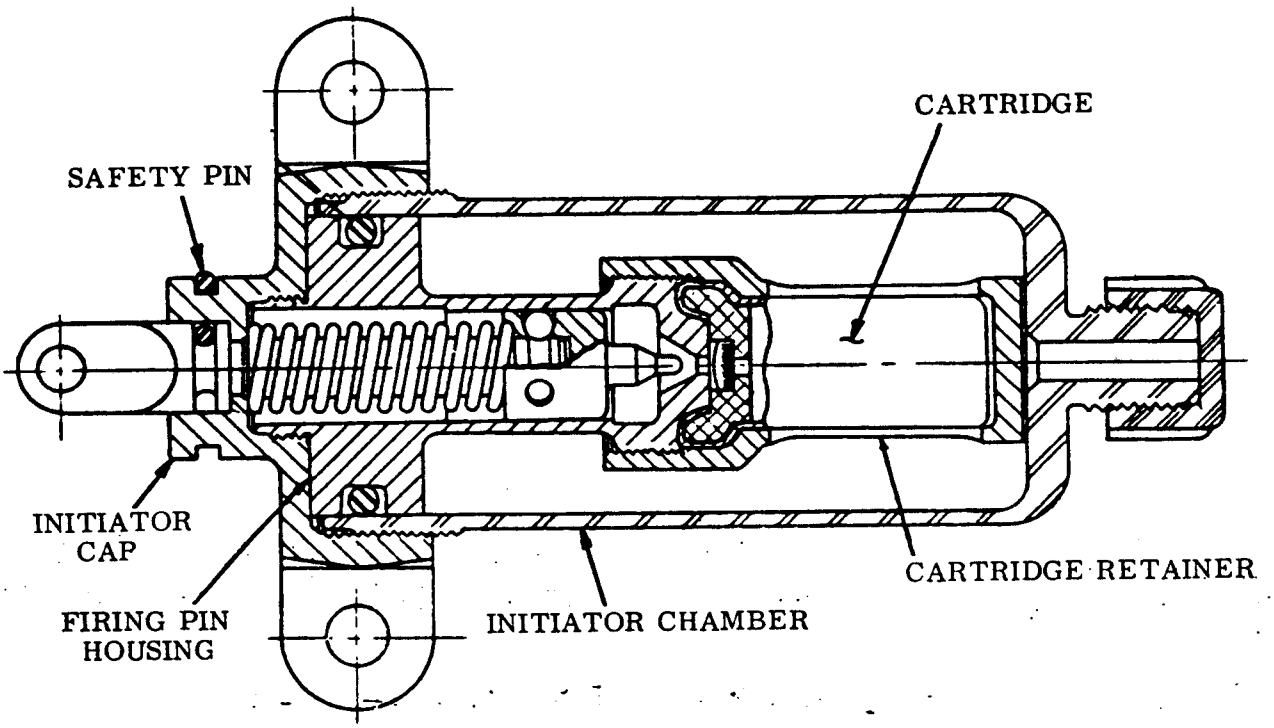

Figure 9-15. M3 Initiator (Typical)

a. Ensure that safety pin is properly installed.

b. Remove setscrews from initiator cap.

c. Unscrew cap from initiator chamber.

d. Unscrew cartridge retainer from firing pin housing.

e. Remove cartridge.

9-21. INITIATORS, M8, M27, M64, M86, M89, and M99, (figure 9-16) will be disassembled as follows:

a. Ensure that safety pin is properly installed.

b. Remove setscrews from initiator cap.

c. Unscrew cap from initiator chamber/body.

d. Remove cartridge.

9-22. INITIATORS, M5, M26, M31, M72, M88 Series and M114, (figure 9-17) will be disassembled as follows:

a. Ensure that pressure inlet port is properly plugged.

b. Remove setscrews from initiator cap.

c. Unscrew cap from initiator chamber.

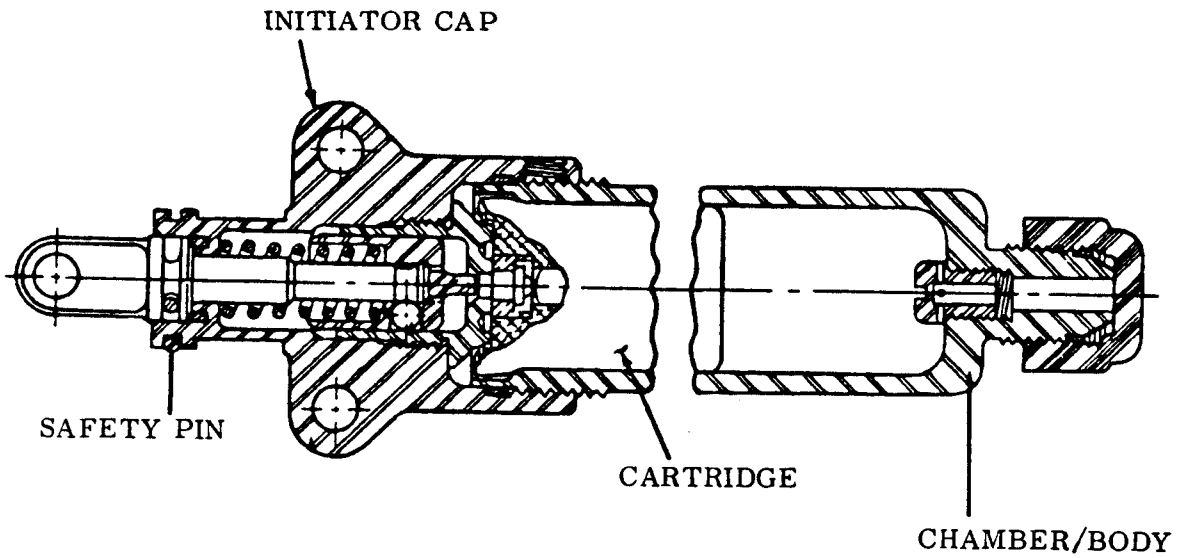

Figure 9-16. M27 Initiator (Typical)

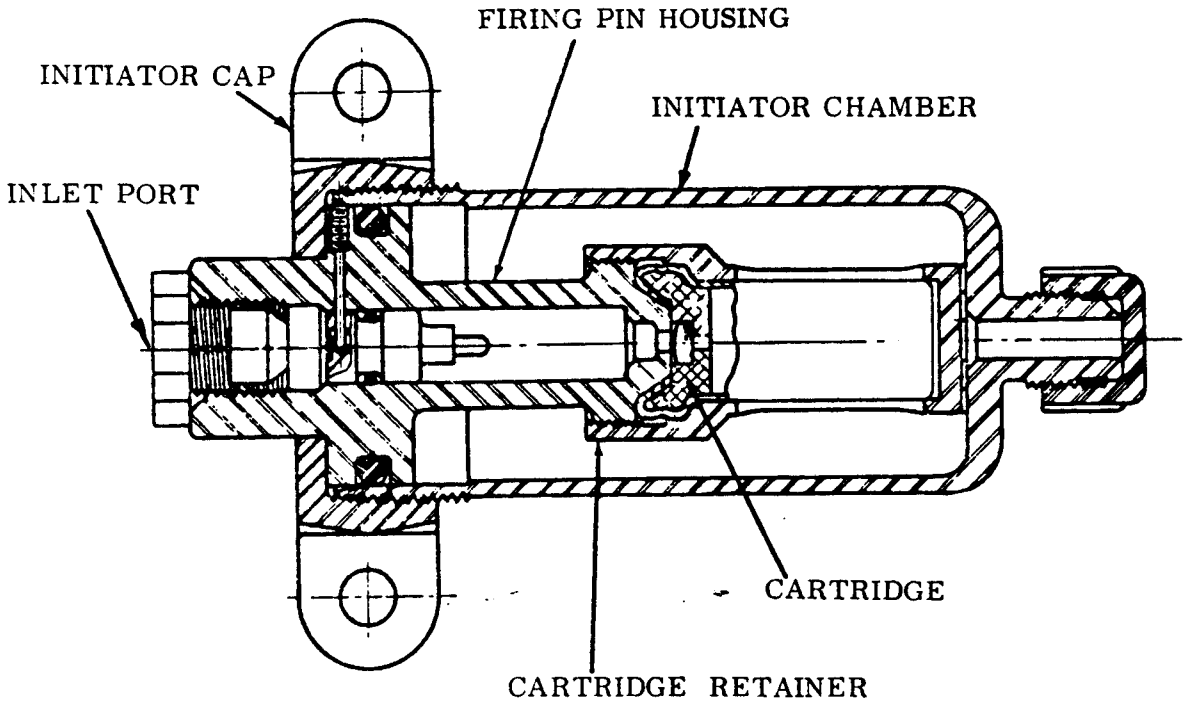

Figure 9-17. M5 Initiator (Typical)

d. Unscrew cartridge retainer from firing pin housing.

e. Remove cartridge.

9-23. INITIATOR, M9, M28, M53 and M80 Series, (figure 9-18) will be disassembled as follows:

a. Ensure that pressure inlet port is properly plugged.

b. Remove setscrews from initiator cap.

c. Unscrew cap from initiator chamber/body.

d. Remove cartridge.

9-24. INITIATOR, part No. 0113226 Series, (figure 9-19) will be disassembled as follows:

WARNING

Do not apply any source of pressure to the inlet port.

a. Remove cap and packing from housing.

b. Install two nuts on a 3/8 24 NF size bolt or threaded rod and tighten nuts toward each other to lock 1/8 inch from end of thread.

c. Screw bolt or rod into firing pin holder of the cartridge and carefully pull cartridge out of bore in the housing.

9-25. CANOPY REMOVER, M8A1 (figure 9-20) will be disassembled as follows:

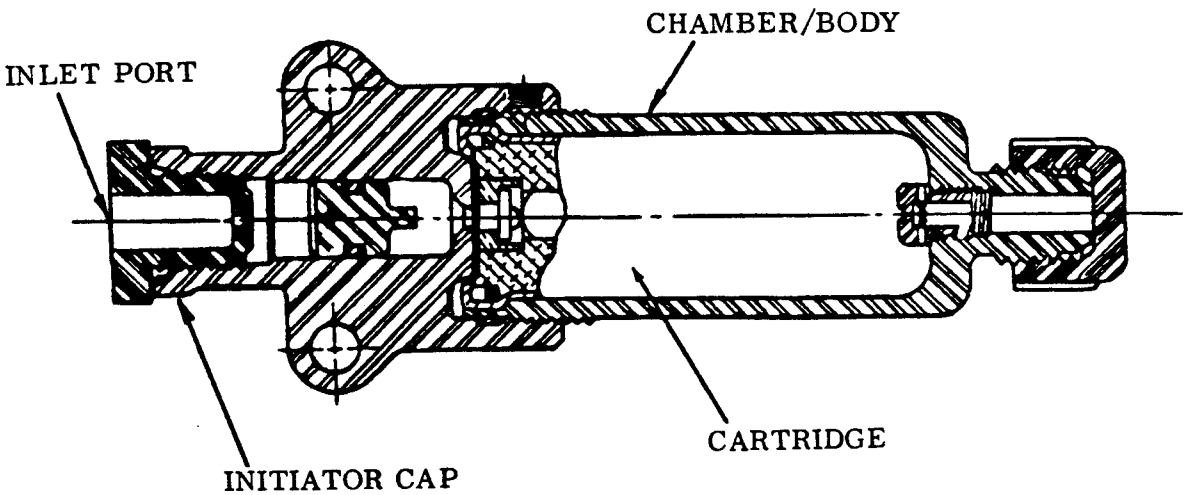

Figure 9-18. M28 Initiator (Typical)

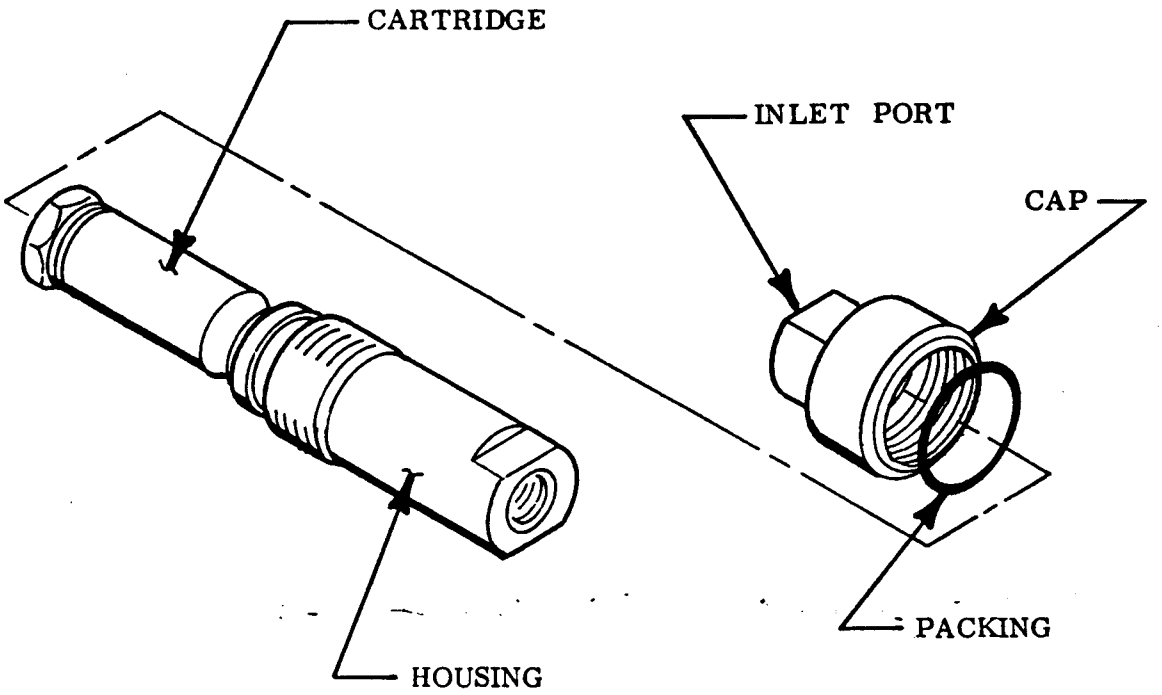

Figure 9-19. Initiator, Part No. 0113226 Series

WARNING

Do not apply any source of pressure to the inlet gas port.

a. Remove adapter (turn counterclockwise) from housing adapter assembly.

b. Carefully remove cartridge.

9-26. CANOPY REMOVER M9 (figure 9-21) will be disassembled as follows:

WARNING

Do not apply any source of pressure to the inlet gas port.

a. Turn gas port and cap together counterclockwise until gas port movement is restricted. Restrain cap and rotate gas port clockwise back to approximately original position. Repeat above procedures until gas port and cap screws off ballistic chamber tube.

b. Carefully remove cartridge.

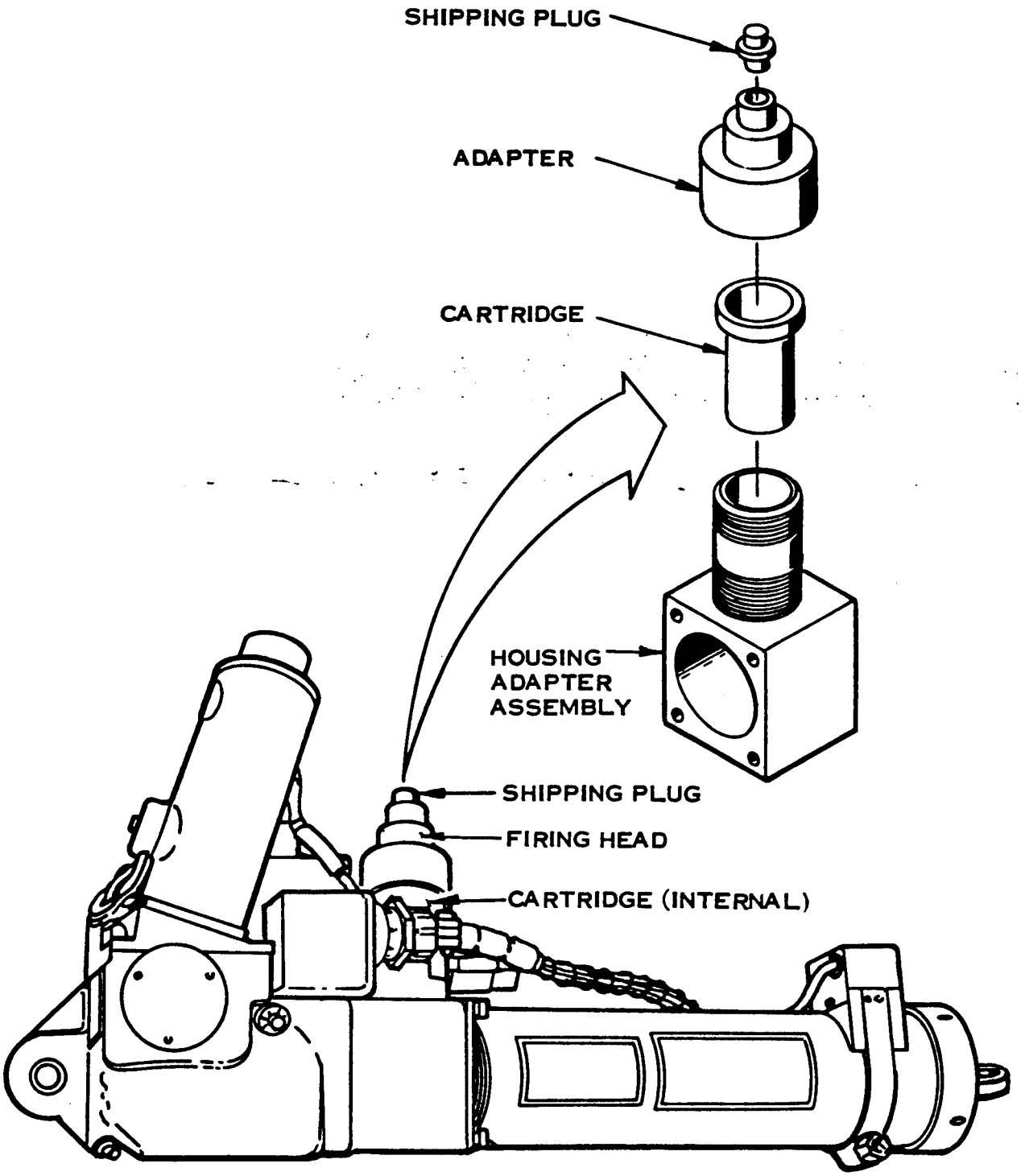

Figure 9-20. Canopy Remover M8A1

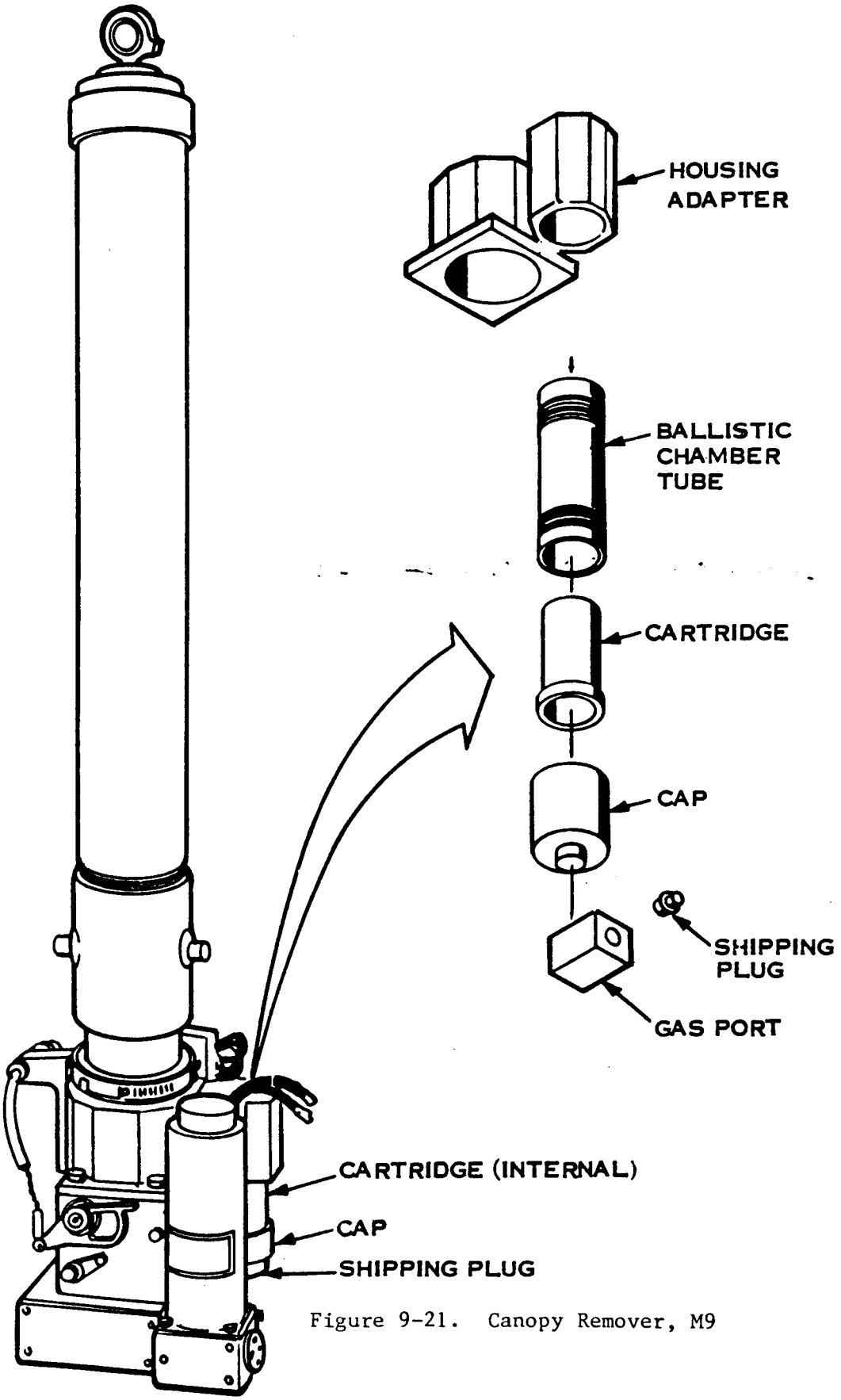

Figure 9-21. Canopy Remover, M9

9-27. CANOPY REMOVER, Part No. 2218 Series (figure 9-22) will be disassembled as follows:

WARNING

Do not apply any source of pressure to the inlet gas port.

a. Remove setscrew (turn counterclockwise) from retainer.

b. Slide retainer off firing head.

c. Unscrew firing head (turn counterclockwise).

d. Carefully remove cartridge.

9-28. DISPOSAL PROCEDURES.

WARNING

Egress items are extremely sensitive and will be handled carefully to avoid inadvertent functioning. Do not drop, throw or jar these items during handling. Items are extremely sensitive to shock, heat or friction.

9-29. Disposal of items listed in table 9-1 will be in accordance with the paragraph referenced in the table.

9-30. METHOD 1.

NOTE

Percussion primers need not be removed from inner packing.

a. Prepare pit.

b. Remove items from packing material and hand place in wooden container. Place items so that explosive charges are in close proximity to each other.

c. Remove cap protectors from friction detonators.

d. Hand place items in wooden container so that explosive charges are in close contact with each other.

e. Place Composition C in contact with all items.

f. Place containers in pit.

g. Prime Composition C with detonating cord.

h. Cover containers and demolition charges with at least 0.61 meter (two feet) of earth to limit fragments.

i. Prepare for detonation using electric/nonelectric firing system in accordance with Section IV.

j. Retire to proper distance.

k. Effect detonation.

9-31. METHOD 2.

NOTE

Items may be disposed of in a burning furnace if available.

a. Prepare pit.

b. Place a 0.31 meter (1-foot) layer of combustible material in bottom of pit.

c. Unpack items and place on combustible material.

d. Prepare ignition train in accordance with Section IV.

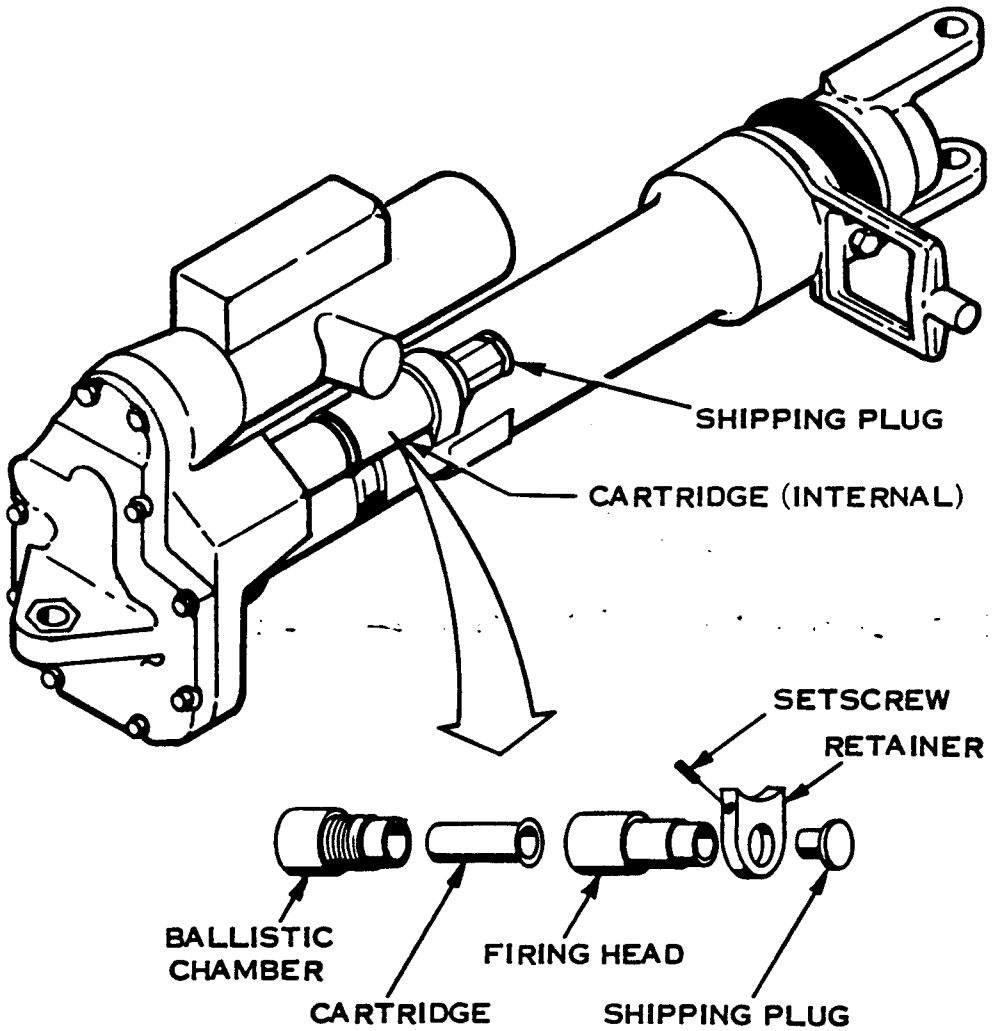

Figure 9-22. Canopy Remover, Part No. 2218 Series (Typical)

e. Cover pit with pierced steel planking or suitable substitute.

f. Effect ignition in accordance with Section IV.

g. Retire to proper distance.

9-32. METHOD 3 (Rocket Motor disposal by burning).

a. Fabricate a rocket motor disposal setup as follows (figure 9-23):

(1) Drill two 5.1 centimeters (2-inch) "I" beams or equivalent angle iron to accommodate rocket motor assembly mounting bolt. Mounting bolt must be a 1.27 centimeters (1/2-inch) steel bolt with nut attached or a pin of equal strength capable of being secured in place.

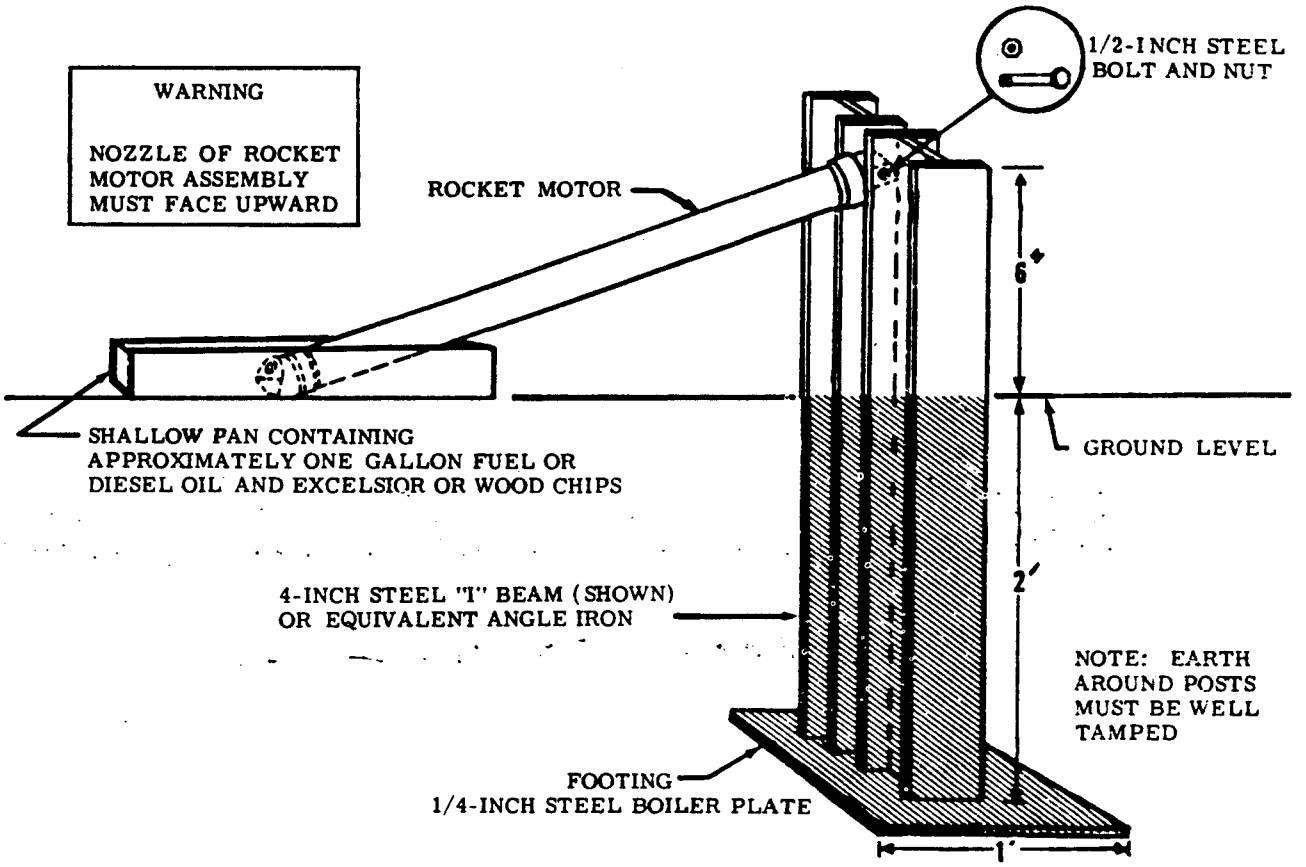

Figure 9-23. Rocket Motor Disposal Setup

(2) The "I" beams will be set in the ground a minimum depth of 0.61 meter (two feet) and firmly tamped. Holes drilled to accommodate mounting bolt or pin, used to secure rocket motor assembly, will be approximately 15.2 centimeters (six inches) above ground level. If dry, sandy or other unstable soil is encountered, weld a footing of 0.64 centimeters (1/4-inch) steel plate a minimum of 30.5 centimeters (one foot) square to bottom end of "I" beams or angle iron.

b. Attach rocket motor assembly to the "I" beams or equivalent angle iron. Ensure security of the 1.27 centimeters (1/2-inch) steel bolt or pin.

c. Place a shallow pan containing approximately one gallon of fuel or diesel oil under nozzle end of the rocket motor assembly. Wood shavings or excelsior may be used in and around fuel pan to promote burning.

d. Prepare ignition train in accordance with Section IV.

e. Effect ignition in accordance with Section IV.

f. Retire to proper distance.

WARNING

Allow sufficient time for expended rocket motor assembly to cool before handling.

g. Disassemble expended rocket motor from disposal setup.

NOTE

Items specified for disposal in accordance with paragraph 9-34 are inert. Cartridges are installed and removed as required by the specific aircraft maintenance manual.

9-33. METHOD 4. (Catapults M3A1, M4A1, M5A1, M9 and Rocket Catapult, 10006-27 series, CKU-2/A, CKU-7/A, 1001 Series.)

a. Place catapults/rockets horizontally, on firm ground, touching each other.

b. Cut an M112 block of Composition C, or equivalent, in half lengthwise, using one block per each catapult/rocket being disposed of.

c. Place two strips of Composition C along each catapult/rocket beginning at the cartridge/inlet end.

d. Connect strips of Composition C with additional Composition C at the cartridge/inlet end if required.

e. Prime Composition C using electric/nonelectric blasting cap firing system in accordance with Section IV.

f. Retire to proper distance.

g. Effect detonation.

9-34. METHOD 5. (Rocket Catapults 10100 Series, 2124-19, 2174 Series.)

a. Place rocket catapults horizontally on firm ground, touching each other with nozzle facing upward. Nozzle is facing upward if "This face aft" can be read on the seat lug.

b. Cut two M112 blocks of Composition C, in half lengthwise, using two blocks, or equivalent, for each catapult being disposed of.

c. Place Composition C strips the full length of each catapult.

d. Connect Composition C strips with additional Composition C, if required.

e. Prime Composition C using electric/nonelectric blasting cap firing system in accordance with Section IV.

f. Retire to proper distance.

g. Effect detonation.

9-35. METHOD 6 (Rocket catapult 2400 Series).

a. Place rocket catapults horizontally on firm ground with all cartridges at same end.

b. Cut M112 blocks of Composition C, or equivalent, in half lengthwise using 2-1/2 blocks for each catapult being disposed of.

c. Place four Composition C strips full length of catapult.

d. Place fifth strip of Composition C on top of cartridge.

e. Connect all strips of Composition C at cartridge end with additional Composition C, if required.

f. Prime Composition C using electric/nonelectric blasting cap firing system in accordance with Section IV.

g. Retire to proper distance.

h. Effect detonation.

9-36. METHOD 7. (Motor, Man/Seat Separator, part No. 1033)

a. Place rockets on firm ground, parallel and touching each other.

NOTE

If a single rocket is being disposed of, use one M112 block of Comp C, or equivalent, placed on top of the rocket. One block practically covers two rockets.

b. Place an M112 block of Comp C, or equivalent, on top of each two rockets being disposed of.

c. Connect Comp C blocks with additional Comp C, if required.

d. Prime Comp C using electric/nonelectric blasting cap firing system in accordance with Section IV.

e. Retire to proper distance.

f. Effect detonation.

9-37. Inert Items.

a. Ensure that cartridges have been removed.

b. Inspect and certify the items as scrap metal in accordance with T.O. 11A-1-60.

GLOSSARY

A

AEROSOL - A solid or liquid, not vaporized, but divided into particles small enough to float in the air for extended periods of time. Smokes are aerosols; however, aerosols are not necessarily always visible.

B

BARRICADE - An intervening barrier, natural or artifical, of such size, type and construction as to limit the effect of an explosion or exposure on buildings, structures or personnel near enough to suffer damage.

BIOLOGICAL AGENT - A solid, liquid or aerosol, which through its biological properties produces injurious or lethal effects on personnel, plants, or animals.

BLASTING CAP - A cylindrical detonator containing one or more sensitive initiating explosives used to initiate the detonation of demolition charges. There are several types of blasting caps, as follow:

a. Electric blasting caps. These are capable of being set off by an electrical current.

b. Nonelectric blasting caps. These are capable of being set off by a spit of fire (normally from a safety fuse).

C

CHEMICAL AGENT - A substance which, by its ordinary and direct chemical action and in concentrations attainable in the field, produces a toxic or irritating (harassing) effect; a screening smoke; an incendiary action, or any combination of these. An agent which produces more than one such effect is classified according to its principal use.

CONCENTRATION - The amount of a substance, regardless of its physical state, present in a given unit volume of air. Concentration is visually expressed in milligrams per cubic meter (mg/m^3). The amount of vapor actually inhaled or absorbed by an individual is not referred to as concentration.

CONTAMINATION - The presence of, or act of supplying, a chemical agent in a dangerous amount or concentration on an individual, object or area. For liquid agents, contamination is usually expressed in milligrams per square meter (mg/m^2), ounces per square yard (oz/yd^2) or tons per square mile ($tons/mi^2$).

CONVERSION OF TEMPERATURE - To convert Fahrenheit to Celsius subtract 32 from the Fahrenheit reading and divide by 1.8. To convert Celsius to Fahrenheit, multiply the Celsius reading by 1.8 and add 32.

D

DECONTAMINATING MATERIAL - Any substance used to chemically destroy, physically remove, seal in or otherwise make harmless a chemical agent.

DECONTAMINATION - The process of making any individual, object or area safe by chemically destroying or physically removing harmful chemical agents. An object or area may be made safe for unprotected personnel by effectively sealing in the harmful agent, if it cannot be removed chemically or physically.

DEMILITARIZATION - The act of destroying the military defensive or defensive advantage inherent in munitions and prevents further use of the item for its intended purpose.

DEMOLITION CHARGE - An intentionally placed explosive charge used under controlled conditions for a desired explosive effect.

DEMOLITION OUTFIT - A combination of explosive and nonexplosive accessory items which together provide for a specified demolition capability.

DETONATOR - A device capable of inducing a high-order detonation in high explosives.

DETONATING CORD - A flexible tubing containing a core of high explosive which carries the detonation wave from one end to the other at approximately the detonation velocity of the explosive in the core.

DOWNWIND VAPOR HAZARD (QUANTITY/DISTANCE) - The distance downwind from the munitions which exposed individuals can be expected to exhibit certain physiological effects. This distance is not only dependent on the source strength (quantity), but also upon the toxicity of the agent and the meteorological conditions at time of release.

DUD - A discharged but unexploded bomb, projectile or grenade. A dud may result from defects in the fuze booster, or charge; from the unscrewing of fuzes in flight; or from the character of the ground at point of impact. A dud is a source of danger; if improperly handled, it may explode and cause injury to personnel. A comparatively slight blow or disturbance may cause a dud to explode. Duds should be destroyed in place whenever possible.

E

ELECTROEXPLOSIVE DEVICE (EED) - An electrically initiated explosive device. It is susceptible to initiation from electromagnetic radiation.

EXPLOSIVE EQUIVALENT - The equivalent power of an explosive when compared to an equal weight of TNT. Usually identified as greater or less powerful than TNT and is normally identifiable to two decimal, e.g., Composition C-4 is 1.15 times more powerful than TNT (1 pound of Composition C-4 is equivalent to 1.15 pounds of TNT).

F

FIRING DEVICE - A device that causes the initiation of demolition charges either directly or through its effect on a blasting cap, electric squib, or detonating cord. It may be electrical, mechanical, or electromechanical.

FLAMEPROOF - Clothing and other combustible materials which have been treated or coated to decrease their normal burning characteristics.

FUSE - A slow-burning powder-filled cord that carries flame through its length at a known and uniform rate per unit of length. Also known as "Safety fuse," "time fuse," and "time blasting fuse."

FUZE - (Not to be confused with "fuse."). A mechanical, electrical, or electromechanical device used to function an explosive device such as a bomb or projectile. In demolition work, a firing device may be termed a fuze.

☆U.S. GOVERNMENT PRINTING OFFICE: 1980-677-156/166

H

HOLDING AREA - That area established, within a site, for temporary storage of munitions to be destroyed, demolition material and blasting caps. The holding area must be situated at great enough distance from the disposal point or barricaded to ensure the material stored therein is safe from premature detonation from flying debris resulting from a disposal action.

HYDROLYSIS - The reaction of a chemical agent or chemical substance with water, whereby decomposition of the substance takes place and one or more new substances are produced. Hydrolysis reduces the effectiveness of many chemical agents; although, in some, the resulting product of hydrolysis may in itself be a poison, as with agents containing arsenic. The rate of hydrolysis is determined by the resistance offered by a chemical agent or substance to decomposition by water.

I

INVERSION CONDITON - An increase of air temperature resulting from an increase in altitude (the ground being cooler than the surrounding air). This condition is usually found on clear or partially-clear nights, and early in the morning to about one hour after sunrise. There will be no convection currents and little mechanical turbulence, with winds less than six miles per hour. A stable atmospheric condition such as described is favorable for releasing chemical agents for tactical purposes, but it is the most unfavorable condition for disposal purposes.

INTRALINE DISTANCE - The minimum distance allowable between two buildings within one operating line.

L

LAPSE CONDITION - The condition in which a decrease of air temperature results from an increase in altitude (the ground being warmer than the surrounding air). This condition is usually found when skies are clear, between the hours of 1000 and 1600. During such conditions, strong convection currents may exist. An unstable atmospheric condition such as described is favorable for disposal of chemical materials, but it is the most unfavorable condition for release of chemical agents for tactical purposes.

M

MAGAZINE - A structure designed for storage of explosives, ammunition or loaded components.

MISFIRE - The failure of a charge to explode in response to a proper initiation attempt. When the charge fires at some time later than intended, it may be referred to as a "hang fire."

P

PERSONNEL SHELTER - A shelter providing frontal protection and overhead protection from fragments. Personnel engaged in demolition operations should always have ample time to reach shelter which provides substantial fragment-proof protection.

POWER - In relation to explosives, the term refers to relative end results. It takes into account such factors as brisance, detonation rate, cratering potential, steel penetration capability, etc.

PRIMER - A device or assembly used to prepare a demolition charge for firing. It may vary depending on the firing system to be employed and, in some cases, the type of charge to be set off.

PROTECTIVE (GAS) MASK - A face mask used by personnel to protect the respiratory system against inhalation of harmful chemical agents.

R

RANGE - Any area of land or water which has been designated by proper authority for exclusive use in functioning of munitions; i.e., bombing, gunnery, disposal, demolition training, etc. A range will have definite boundaries and will be clearly marked on maps/charts. Air space above specific locations will be included in the designated range area. Ranges will be sited in accordance with AFR 127-100.

S

SITE - The locations within a range which are reserved exclusively for use in conducting specific functions involving munitions. A range may have one or several sites; i.e., disposal, training, bombing and gunnery, etc.

STATIC FIRE - Firing, or functioning as designed, a munition in a hold-down position.

T

TOXICITY - The property possessed by a material which enables it to injure the physiological mechanism of a living organism by chemical means, with maximum effect being death.

W

WIND DIRECTION INDICATOR - Weather vanes, smoke pots, smoke grenades or similar devices used for indicating the direction the wind is blowing.

WIND VELOCITY INDICATOR - An anemometer.

☆U.S. GOVERNMENT PRINTING OFFICE: 1979-0-677-053/269

APPENDIX D1-4
AIR FORCE TECHNICAL ORDER 60A-1-1-31

NAVY EODB
ARMY TM
AIR FORCE TO
60A-1-1-31

TECHNICAL MANUAL

EXPLOSIVE ORDNANCE DISPOSAL PROCEDURES

EOD DISPOSAL PROCEDURES

Published under authority of the Secretaries of the Army, Navy, and Air Force.

(Prepared by the Naval Explosive Ordnance Disposal Technology Center, Indian Head, MD 20640-5070)

19 JANUARY 1982

CHANGE 6 14 APRIL 1987

FOR OFFICIAL USE ONLY

This manual is issued for the information and guidance of EOD personnel. It has been prepared by the Department of the Navy in carrying out its responsibilities per Joint Service Regulation AR 75-14/OPNAVINST 8027/1/AFR 136.3/MCO 3027.1.

Errors in this EODB or recommendations for its improvement by Navy units shall be submitted in accordance with NAVSEA OD 44627.

Errors in this EODB or recommendations for its improvement by Marine units should be submitted to the Officer-in-Charge, Marine Corps Detachment, Naval Explosive Ordnance Disposal Technology Center, Indian Head, MD 20640-5098 in accordance with MCO 3571.2.

Report of errors, omissions, and recommendations by Army units for improving this TM by the individual user is encouraged. Reports should be submitted on DA Form 2028, Recommended Changes to Publications, and forwarded directly to Commander, U.S. Army Technical Detachment, Naval Explosive Ordnance Disposal Technology Center, Indian Head, MD 20640-5096.

Recommended changes, additions, or deletions by Air Force units to this T.O., should be submitted in accordance with T.O. 00-5-1 to Commander, Detachment 63, 00/ALC, Naval Explosive Ordnance Disposal Technology Center, Indian Head, MD 20640-5099.

LIST OF EFFECTIVE PAGES

Insert latest changed pages. Destroy superseded pages in accordance with applicable regulations.

NOTE: On a changed page, the portion of the text or art affected by the change is indicated by a vertical line in the margin of the page.

Dates of issue for original and changed pages are:

Original	0	19 January 1982
Change	1	21 September 1982
Change	2	7 November 1983
Change	3	11 December 1984
Change	4	13 January 1986
Change	5	10 February 1987
Change	6	14 April 1987

Total number of pages in this manual is 156 consisting of the following.

PAGE NO.	*CHANGE NO.	PAGE NO.	CHANGE NO.
Title	6	ix	0
A	6	x	5
B	6	1-1	6
C Blank	6	1-2 blank	6
i	0	2-1 - 2-9	0
ii	6	2-10	6
iii - v	4	2-11 - 2-24	0
vi	6	2-25 - 2-26	6
vii - viii	6	2-26.1	6

*Zero in this column indicates an original page.

Section IV. DISPOSAL PROCEDURES

4-1. INTRODUCTION. The disposal of ammunition, explosives, and other dangerous articles may be required because of age, deterioration, damage, obsolescence, surplus, lack of identity, or other cause of unserviceability. The disposal may be emergency or routine in nature. EOD personnel may be required to participate in any of the aforementioned disposal operations.

NOTES

This section is provided for informational purposes and decision guidance only. It is not intended to be used as a procedural manual on any specific item. It will assist EOD personnel in planning operational approaches to munitions disposal procedures and with the layout of disposal sites. The safety summary and disposal procedures for the specific ordnance item take precedence over information herein.

Air Force personnel shall use specific service guidance on procedures such as routine disposal, emergency destruction of munitions, and general demolition techniques when specific guidance is provided. Specific service guidance or requirements convering transportation/handling of explosives, disposal range criteria, and general safety shall also be used when provided.

The criteria for ocean dumping is promulgated by appropriate service directives.

4-2. SCOPE. Emergency disposal operations are required when the immediate destruction of dangerously deteriorated or damaged ammunition or explosives is necessary to protect life and property. Routine disposal operations are normally conducted when personnel, disposal area, and equipment in proper amounts, are available.

4-3. METHODS OF DISPOSAL. The authorized methods of disposal are burning (surface, pit, or trench), detonation, and static firing.

NOTE

Disposal by burying or dumping in wells, streams, marshes, inland waterways, waste places, or pits is NOT authorized.

WARNING

When safety fuse is used to ignite the combustible train, layout the safety fuse in a straight line and place a heavy object on both ends so the fuse will not curl up and cause premature ignition or burn.

NOTE

Perform steps (5) and (6) if cartridge lead wires are less than 1.80 meters (6.0 feet) long. Leave lead wire extensions in place after conducting cartridge continuity test.

(5) Cut and shunt two 1.80 meter (6.00 foot) lead wire extensions for each short lead wire cartridge being used.

(6) Untwist cartridge lead wires, untwist one end of shunted lead wire extensions, splice lead wire extensions to cartridge lead wires, and insulate splices.

(7) Place cartridge(s) and breechplug(s) behind a barricade or sandbag.

(8) Remove shunt from lead wires/lead wire extensions.

(9) Using a galvanometer/blasting cap test set M51, test cartridge(s) for circuit continuity.

(10) Reshunt lead wires/lead wire extensions.

NOTE

For single cartridge-actuated tool, proceed to step (12), for dual cartridge-actuated tool, proceed to step (11).

(11) Remove shunts, connect, and insulate lead wires/lead wire extensions to form a series circuit. Perform continuity test on series circuit and shunt series circuit.

(12) Assemble cartridge(s) and breechplug(s) to cartridge-actuated tool as prescribed in the applicable 60-series manuals.

b. Nonelectric Cartridge. The bullet must be removed from the cartridge and the open end of the cartridge case closed by a small amount of tissue paper before the cartridge is used in a cartridge-actuated tool. Remove the bullet from the cartridge (figure G-3) with the extractor from the Mk 2 Mod 1 tool set (caliber .50 dearmer), as follows.

(1) Lift lock block and release lock plate. Seat cartridge in cartridge holder.

(2) Engage groove of cartridge case with lock plate. Slide lock block into lock plate to secure it.

(3) Place extractor subassembly over bullet, and thread extractor subassembly into cartridge holder.

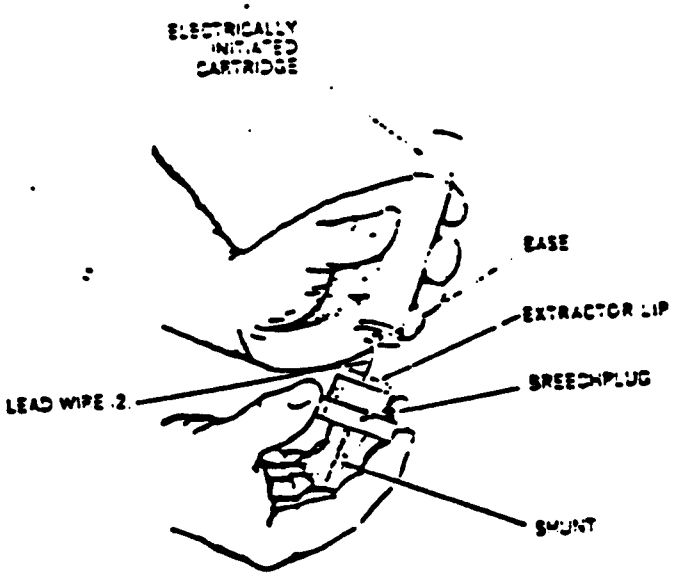

UNCLASSIFIED

Figure 3-2. Passing of Lead Wires Through Breechplug Flash Hole

a. Surface Burning. The burning site should be free of all combustible material (leaves, grass, for a radius of 91 meters (300 feet). Burn sites shall not be closer than 46 meters (150 feet) to another burn site. If required, the materials to be burned may be placed on a bed of combustibles (scrap lumber, wood, excelsior). Nonvolatile flammable liquids (motor or diesel oil) may be poured over the materials to be burned. Ignition may be accomplished using an electric firing system with an electric squib or match, or a nonelectric firing system, and a bag of smokeless powder (figure 4-1) or properly prepared thermite grenades.

NOTE

Burnings are not to be repeated on previously burned over plots within 24 hours.

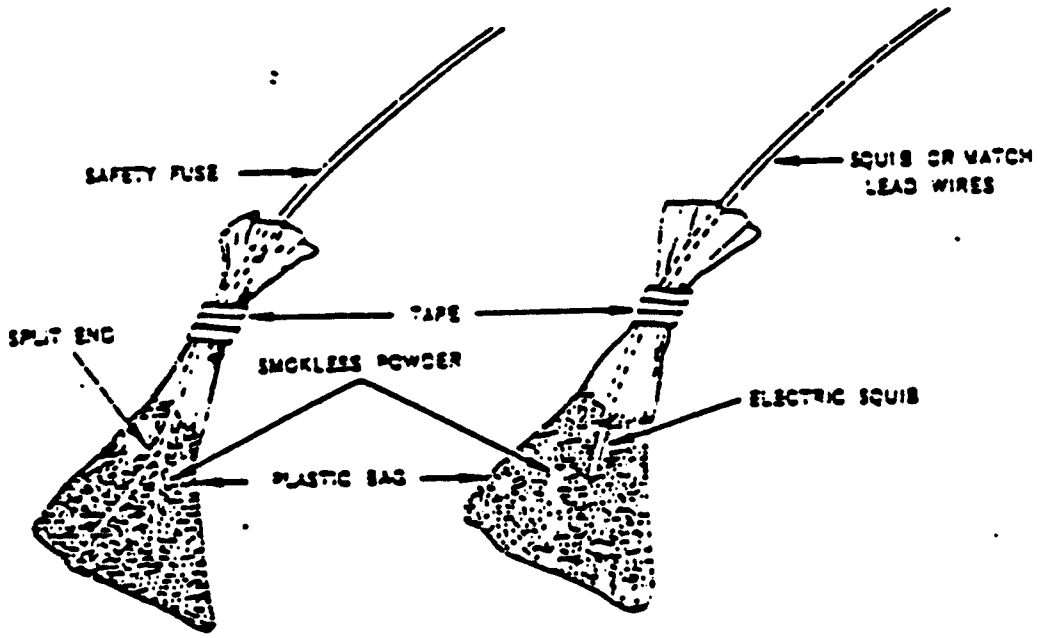

Figure 4-1. Plastic Bag of Smokeless Powder

b. Pit/Trench Burning. Pit/trench burning is normally used when material to be burned may detonate or become propulsive. Figure 4-2 illustrates a typical burning area, figure 4-3 a typical burning pit/trench.

(1) Typical items of ammunition, explosives, and explosive devices that may be burned are:

Black powder smokeless powder
Rocket motor propellants
Bulk high explosives and dynamite (in limited quantities)
Pyrotechnics
Small-arms ammunition to 30 millimeters (other than HE-loaded)
CAD/PAD components
Chemical agents and ammunition (requires specific authorization)
Bomb fuzes without boosters installed
Large primers, 75 millimeters (3.00 inches) and above (removed from cartridge cases)

c. Detonation. The detonation site will be in accordance with the applicable service directive. Detonation may be performed on the surface of the ground or a pit/trench or a natural depression in the earth may be used. A pit, trench, earth depression, and tamping are normally required when control of fragmentation is a factor.

(1) Typical items of ammunition, explosives, and explosive devices that may be detonated are:

Bulk high explosives and dynamite
Explosive loaded grenades and land mines
Explosive loaded bombs, sea mines, and torpedo warheads
Projectiles and mortars (HE, WP, and PWP)
Rocket heads (HE, WP, PWP)
Rocket catapults

d. Static Firing. Static firing may be accomplished on any approved range (burning or detonation). Static firing may be accomplished by placing the item nose down in a hole dug to fit the item. Ignition of the item may be through the item igniter or the use of a smokeless powder bag (figure 4-1). Figure 4-4 illustrates a typical rocket motor/JATO static firing setup. Items that may be disposed of are a rocket motor, a JATO unit or a rocket catapult.

NOTE

If possible, remove nozzles and/or vent prior to static-firing the units.

4-4. TYPICAL DISPOSAL METHODS FOR EXPLOSIVE ORDNANCE.

a. Surface Burning of Rocket Motor Grains.

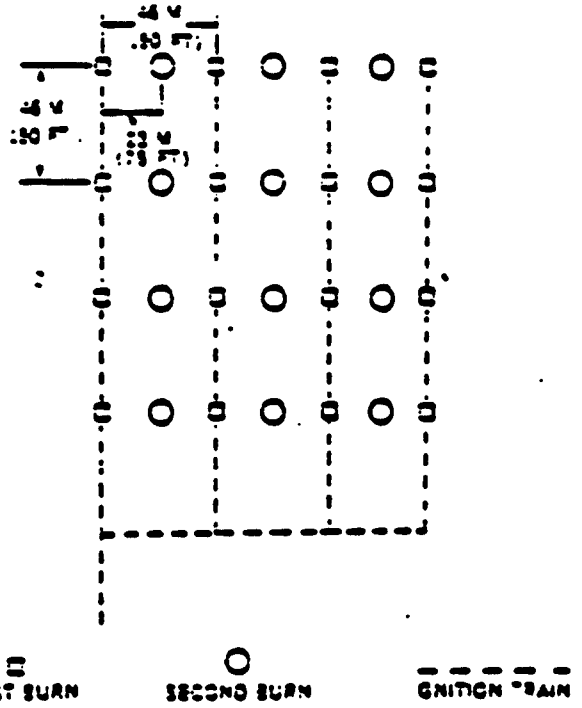

NOTE 1: WHEN MORE THAN ONE PAD OF EXPLOSIVE IS PREPARED, THE PADS MAY BE CONNECTED WITH A CONTINUOUS IGNITION TRAIN AS SHOWN ABOVE

NOTE 2: THE DISTANCE BETWEEN SUCCESSIVE BURNS SHALL BE A MINIMUM OF 30 FT

2391.42

Figure 4-2. Typical Surface Burning Area

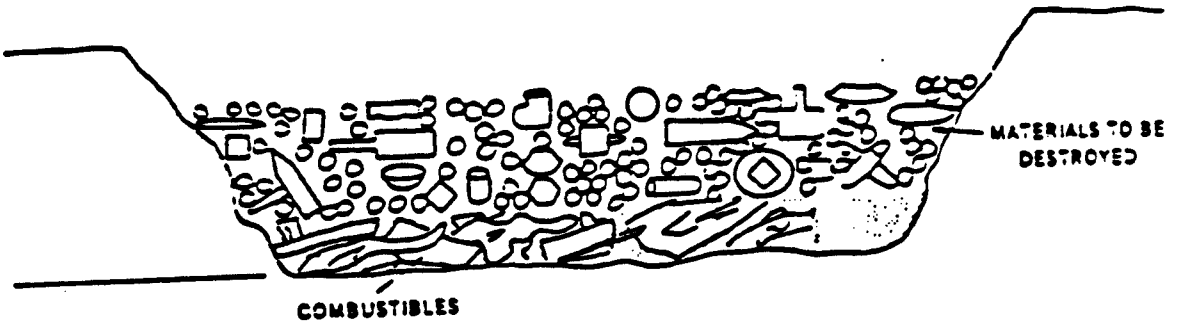

2891/4-3

Figure 4-3. Typical Burning Pit/Trench

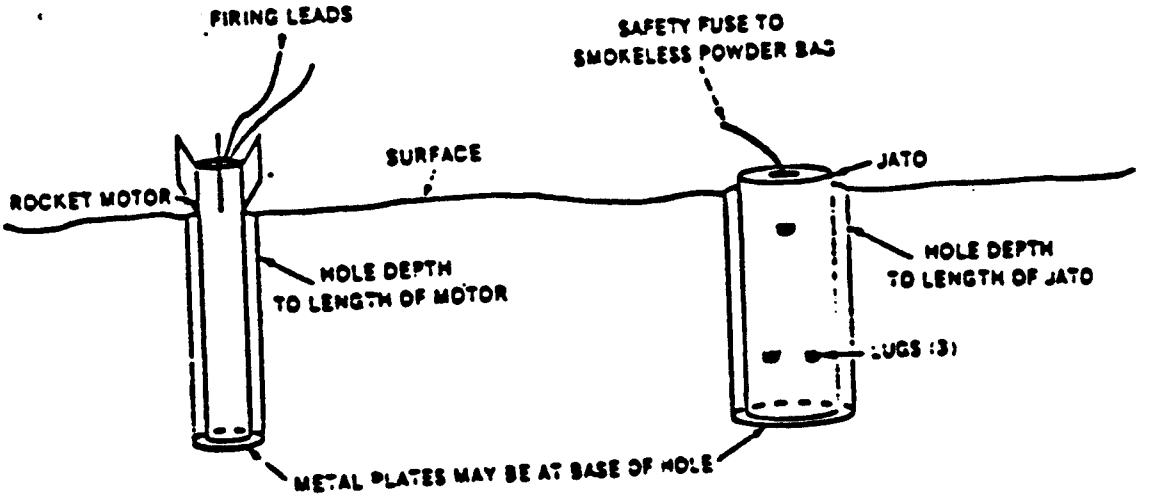

2891.4-4

Figure 4-4. Typical Static Firing Setup

(1) Rocket motor grains may be arranged for burning as shown in figure 4-5.

(2) Other combustible materials may be substituted for the smokeless powder and excelsior.

(3) Methods 2 and 3 are not recommended for the single-perforated rocket motor grain.

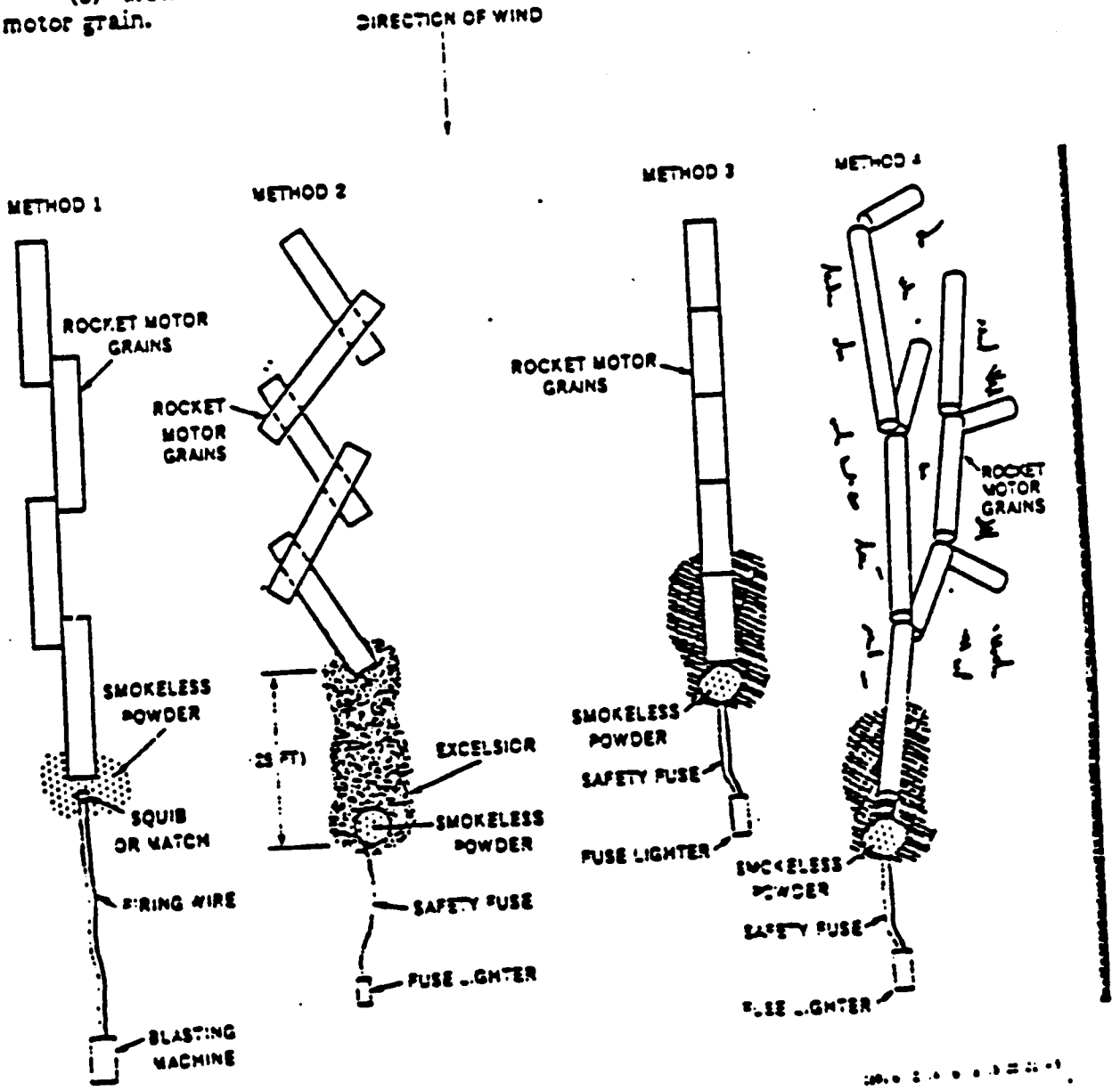

Figure 4-5. Disposal of Rocket Motor Grains

a.1. Surface Burning of Black Powder.

(1) Black powder may be arranged for burning as shown in figure 4-5.1.

(2) Other combustible material may be substituted for smokeless powder or excelsior.

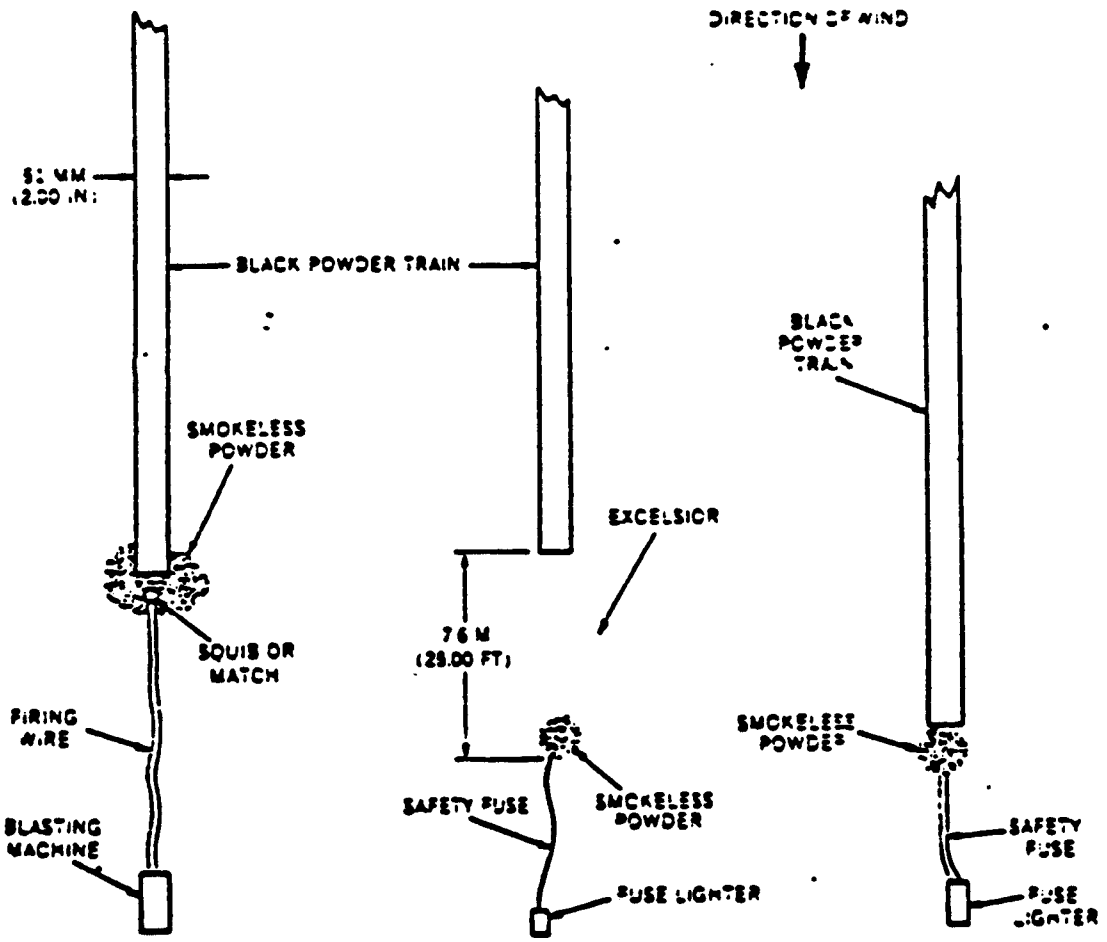

NOTE 1. OPTIONAL METHODS OF IGNITION
NOTE 2. THE DISTANCE BETWEEN TRAINS SHALL BE A MINIMUM OF 3 METERS (10 FEET)
NOTE 3. THE QUANTITY SHALL NOT EXCEED 22.7 KILOGRAMS (50 POUNDS) PER BURN.

Figure 4-5.1 Disposal of Black Powder

This page intentionally left blank.

b. Surface Burning of Bulk High Explosives.

(1) Table 4-1 sets forth the maximum weights allowable per explosive pile. A typical burning area is shown in figure 4-2.

Table 4-1. Maximum Weight Limit for Burning Explosives

Explosive	Maximum Weight limit (kg)	Maximum Weight limit (lb)	Maximum Pile separation (m)	Maximum Pile separation (ft)
Amatol	227	500	30	100
Composition A	227	500	30	100
Composition B	227	500	30	100
Composition C	227	500	30	100
Cyclotol	91.0	200	30	100
Explosive D	227	500	30	100
HBX composition	227	500	30	100
H-6	227	500	30	100
Minol II	227	500	30	100
Nitroguanidine, dry	227	500	30	100
**Nitroguanidine, wet	22.7	50	30	100
Octol	91.0	200	30	100
*PBX	91.0	200	30	100
PBXN	91.0	200	30	100
PBXW	91.0	200	30	100
*Pentolite	11.0	25	15	50
***PETN	11.0	25	15	50
*Picratol	91.0	200	30	100
***RDX	11.0	25	15	50
Tetryl	22.7	50	15	50
*Tetrytol	22.7	50	15	50
TNT	227	500	30	100
Torpex	22.7	50	15	50
*Tritonal	227	500	30	100
Dynamite	22.7	50		
Smokeless powder (large web)	1,384	4,000		
Smokeless powder (small web)	907	2,000		

* The burn weight limit and pile separation distance for these material have not been firmly established. Therefore, when burning these materials, the weight limit and the separation distance should be determined carefully by starting with a very limited amount of explosive and the separation distance shown. The weight limit may then gradually be increased. However, the maximum limit specified shall not be exceeded.

** Wet nitroguanidine has been found to be very difficult to burn. The piles should be saturated with fuel oil.

*** These explosives should be shipped to the burning ground wet, spread on the pad, and allowed to partially dry prior to ignition.

(2) It is possible that some explosives will melt and flow away from the burn into other burn pile, crust over, and not burn. To prevent this occurrence a small dam, a minimum of 76 millimeters (3.00 inches) in height may be erected around the pile to be burned.

(3) Specific guidance on destruction of high and low explosives by detonation, burning, or neutralization is contained in the applicable 60-series manual on Description Of, and Disposal Procedures For, Conventional Explosives and Related Hazardous Materials.

c. Surface Burning of Fire Bombs.

(1) Fire bombs are arranged for burning as shown in figure 4-5.

(2) Remove filler cap(s) or using an axe or other suitable nonsparking tool, perforate the bomb body.

(3) Allow the filler to run out onto the ground.

(4) Ignition may be accomplished as shown in figure 4-5.

d. Detonation.

(1) High-order detonation. The following (figures 4-7 through 4-29) illustrate methods of disposal by detonation of ordnance items. The figures will show single item, multiple item of like items disposal, and multiple mixed item disposal.

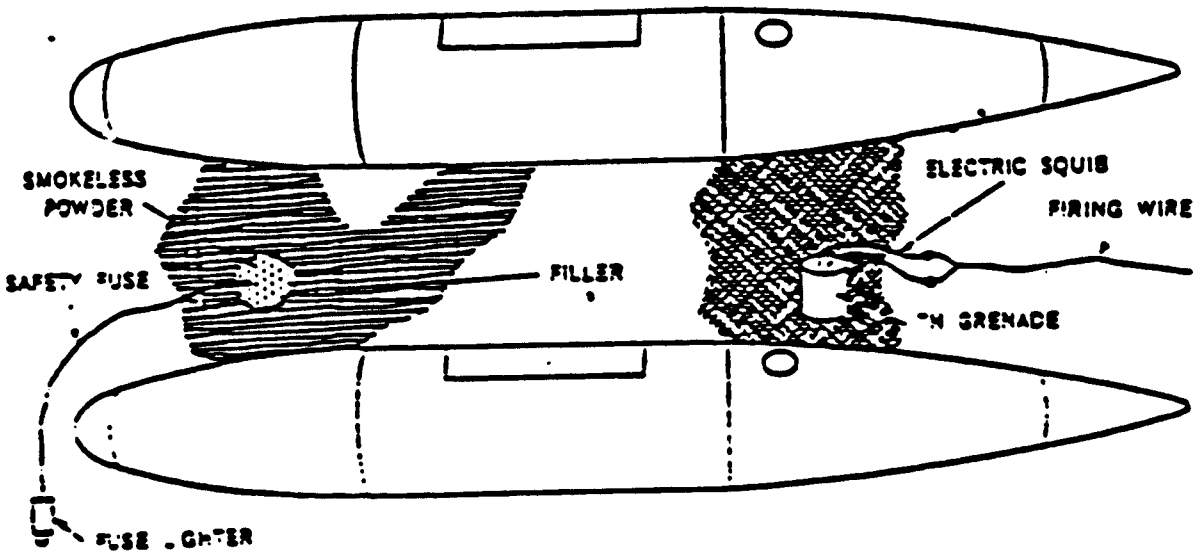

Figure 4-5. Disposal of Fire Bombs.

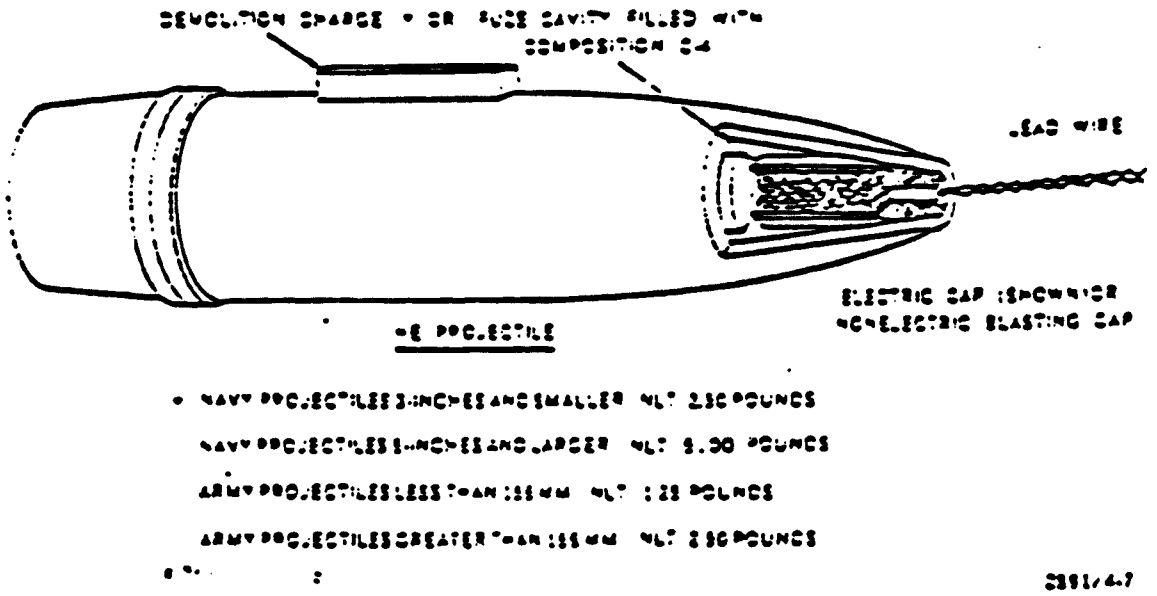

Figure 4-7. Disposal of High Explosive Loaded Projectiles

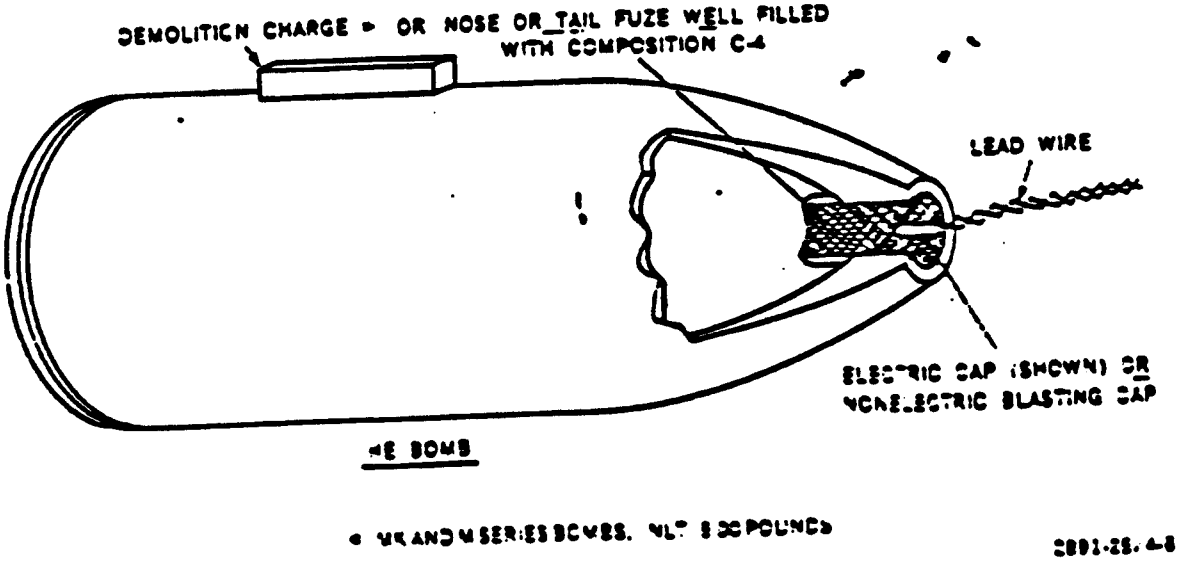

Figure 4-8. Disposal of High-Explosive Loaded Bombs.

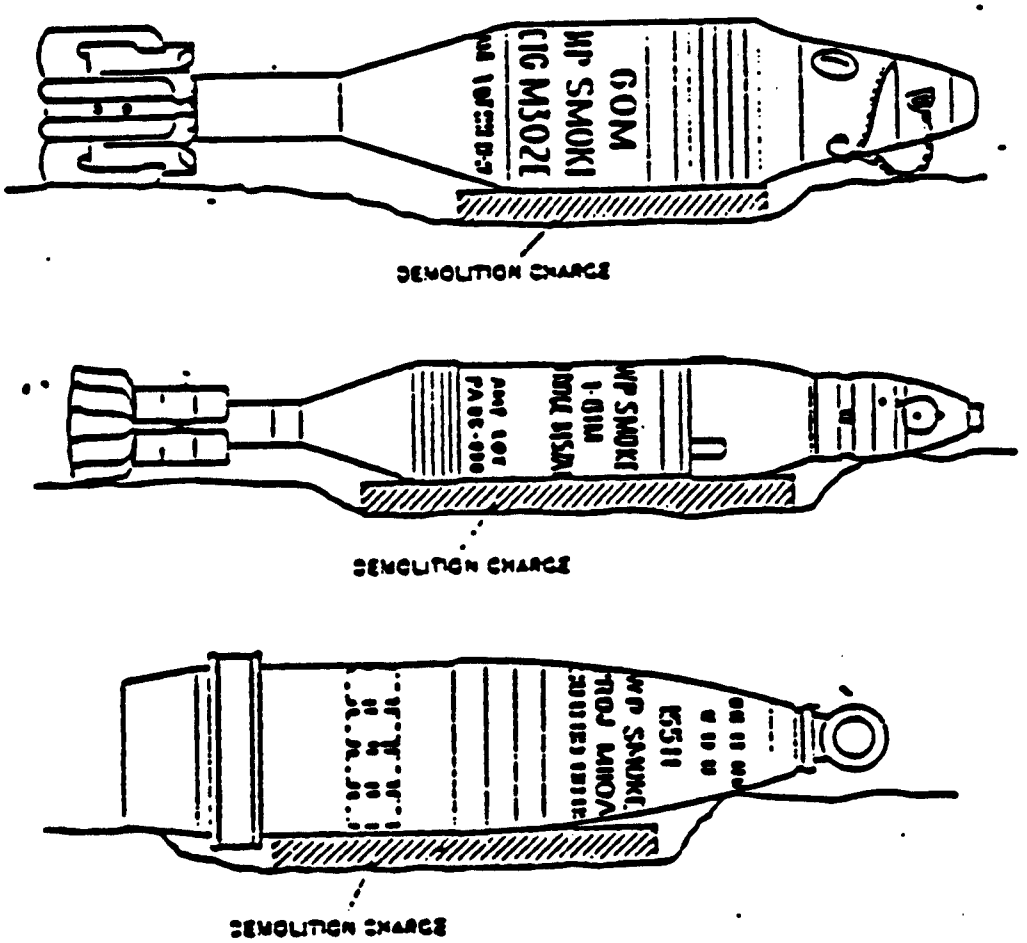

Figure 4-3. Disposal of WP- or PWP-Loaded Mortars and Projectiles.

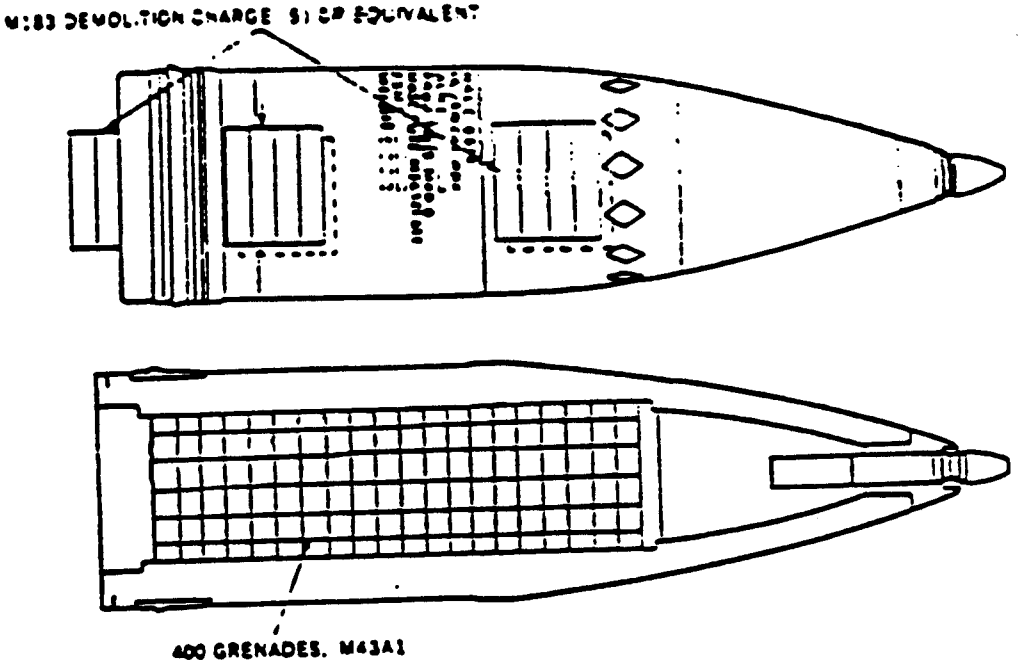

2891/4-10

Figure 4-10. Disposal of U.S. Mk 19 Mod 0 Projectile

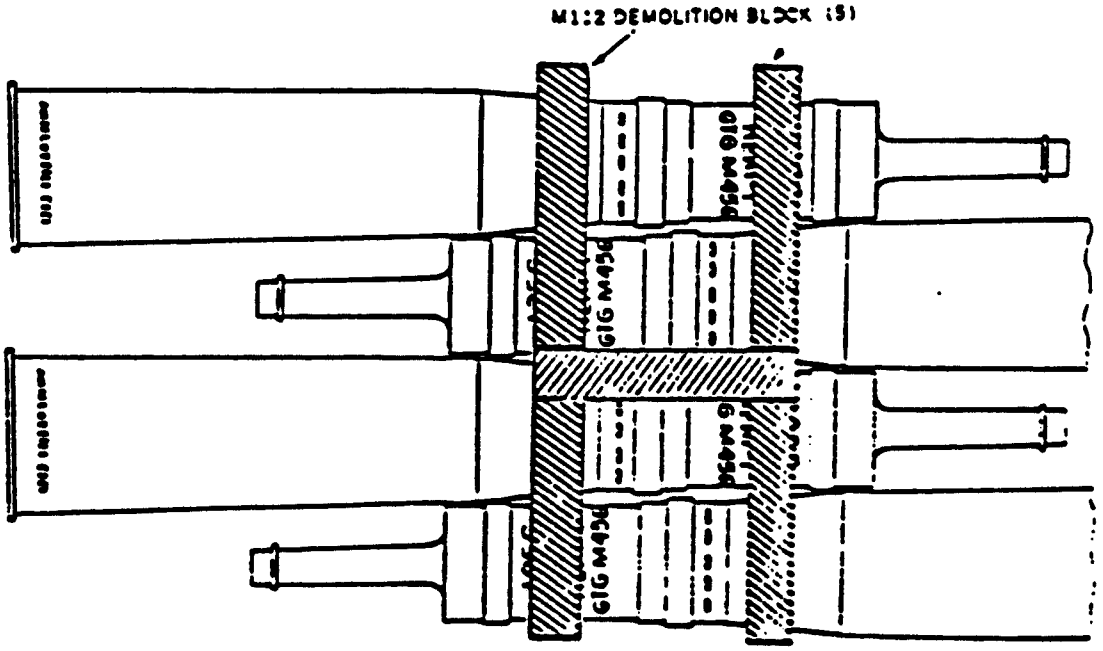

2891 4-11

Figure 4-11. Disposal of HEAT Cartridge

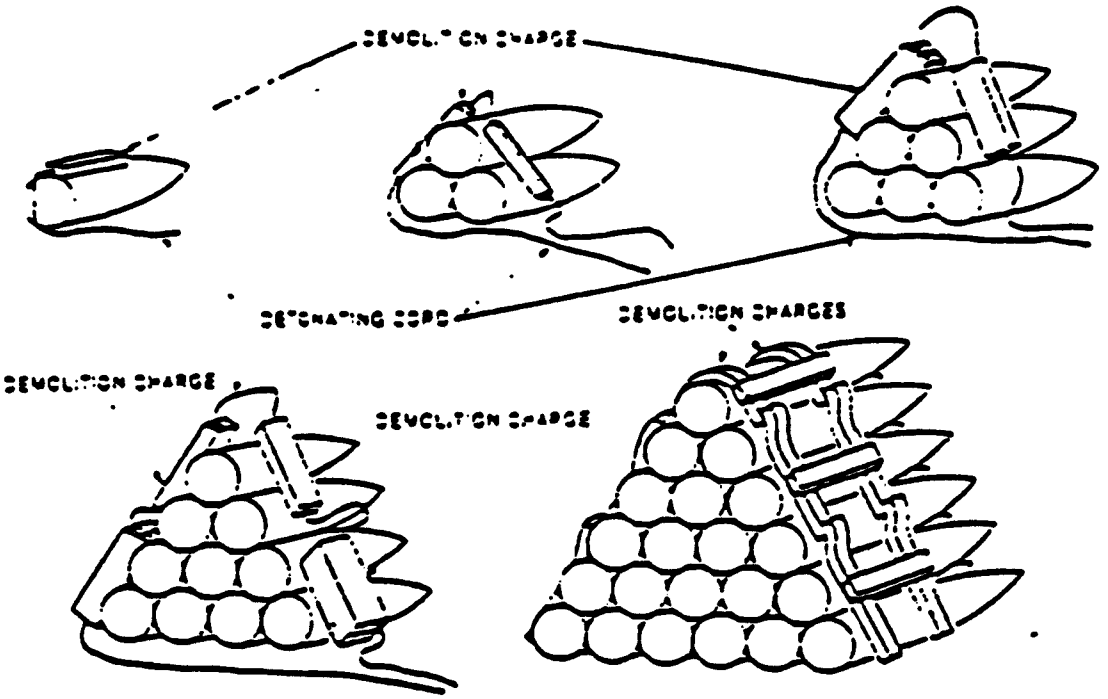

2891. 4-12

Figure 4-12. Single and Multiple Round Disposal Methods

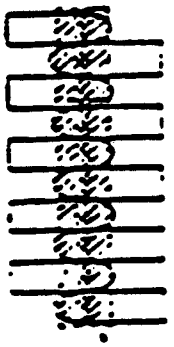

DUPLEXES

2891 4-13

Figure 4-13. Multiple Disposal of 40- Millimeter-Linked Rounds

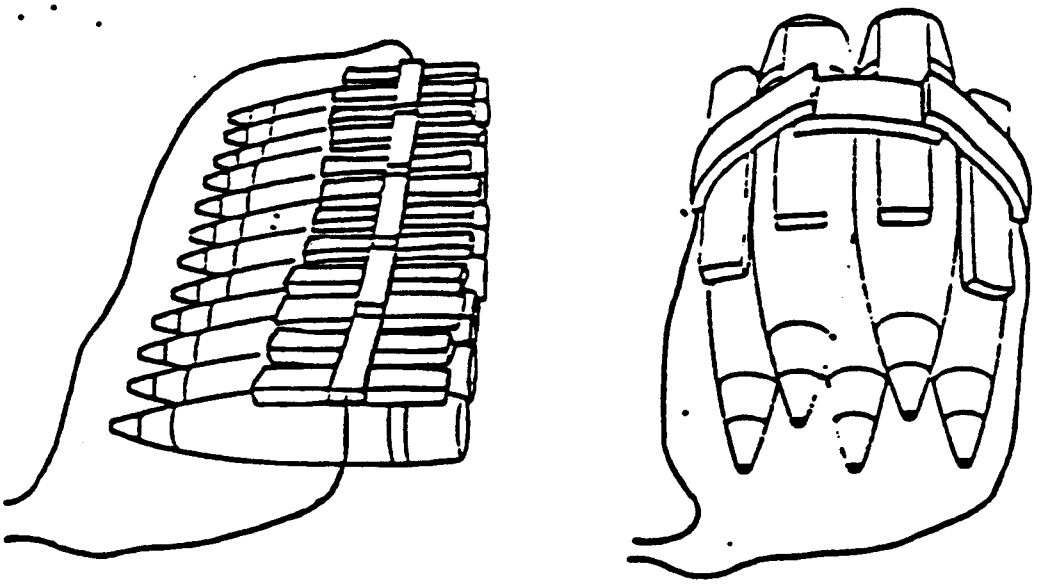

2891. 4-14

Figure 4-14. Multiple Disposal of 105/155-Millimeter ICM Rounds

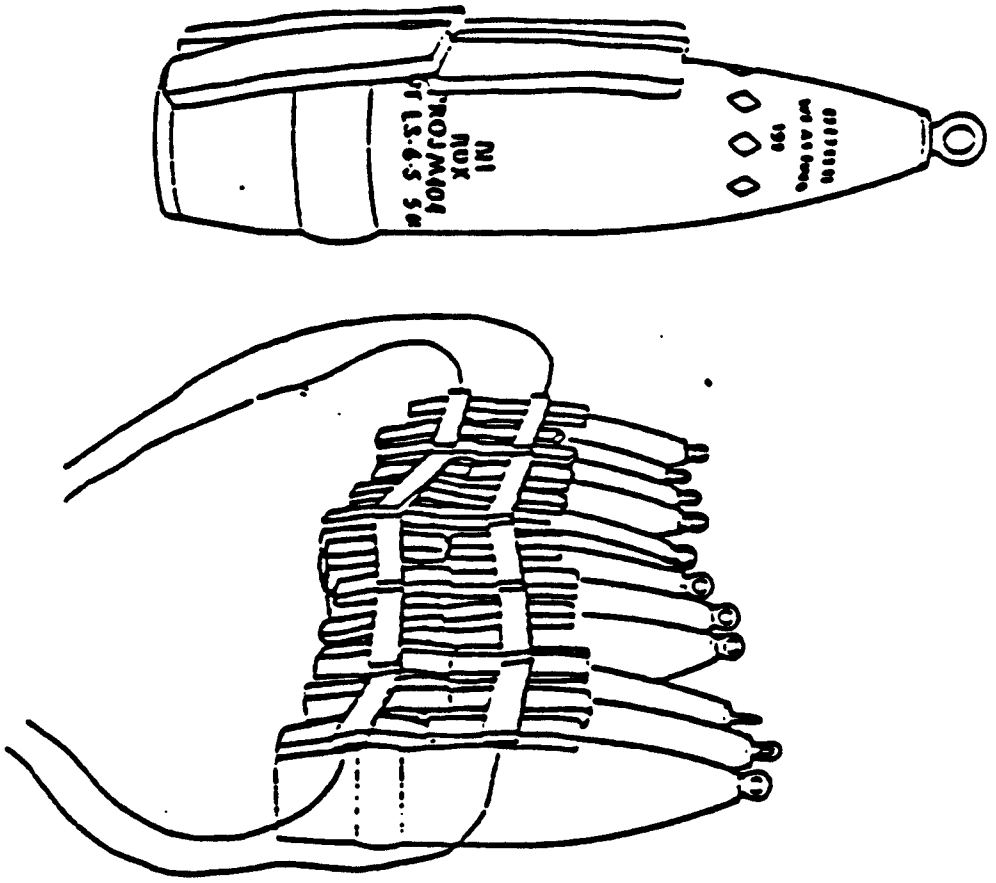

2391. 4.3

Figure 4-15. Single and Multiple Disposal of 5-Inch ICM Rounds

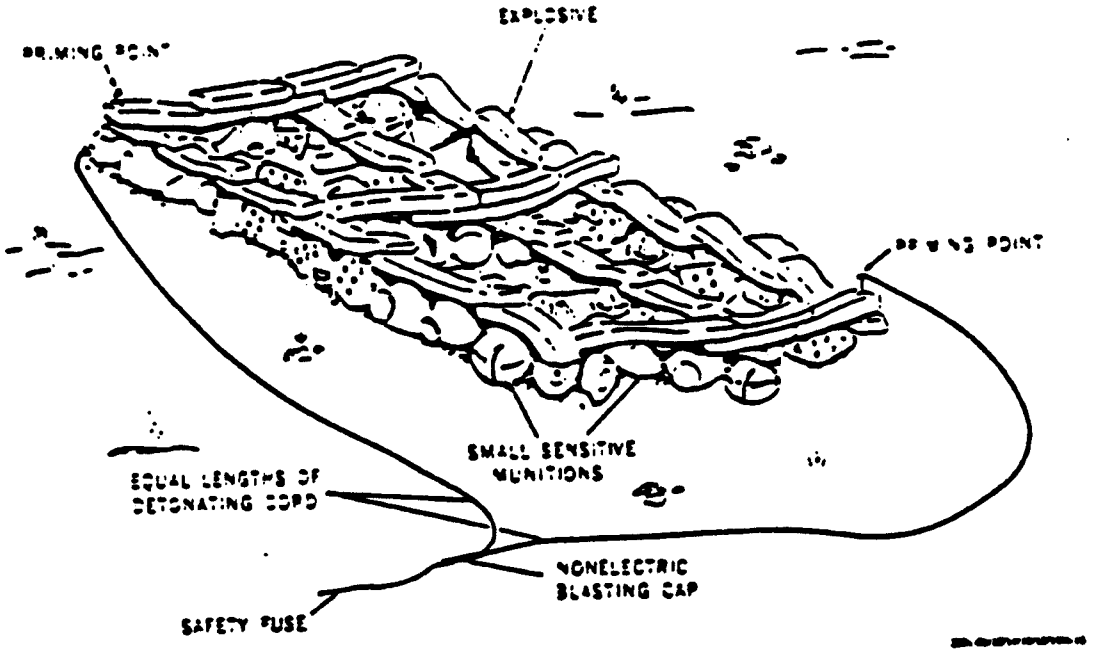

Figure 4-16. Disposal of Small Sensitive Items

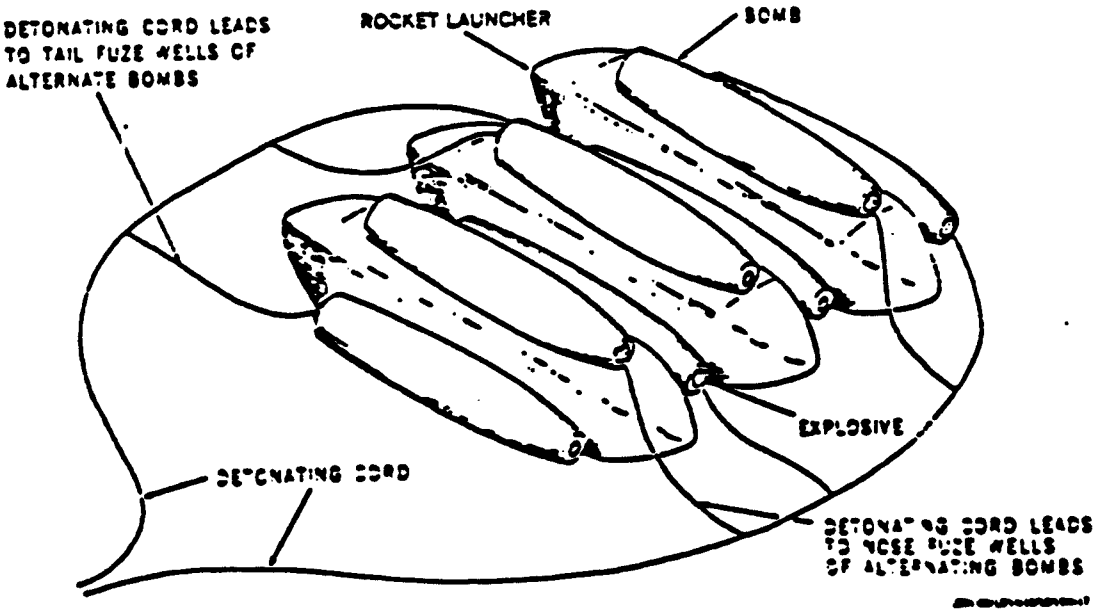

Figure 4-17. Disposal of Rocket Launchers and/or Dispensers

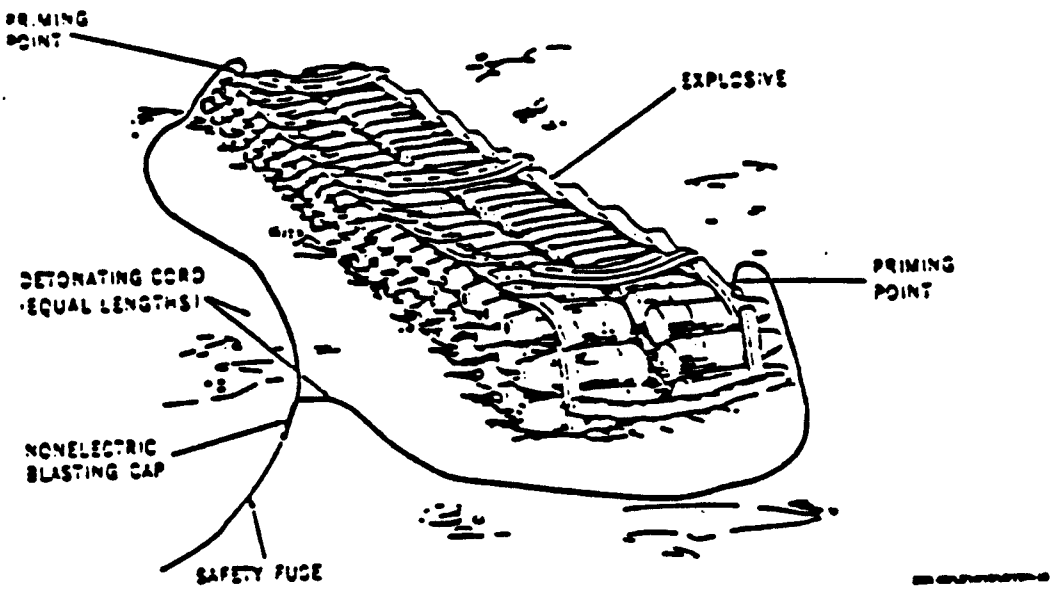

Figure 4-18. Disposal of Projectiles

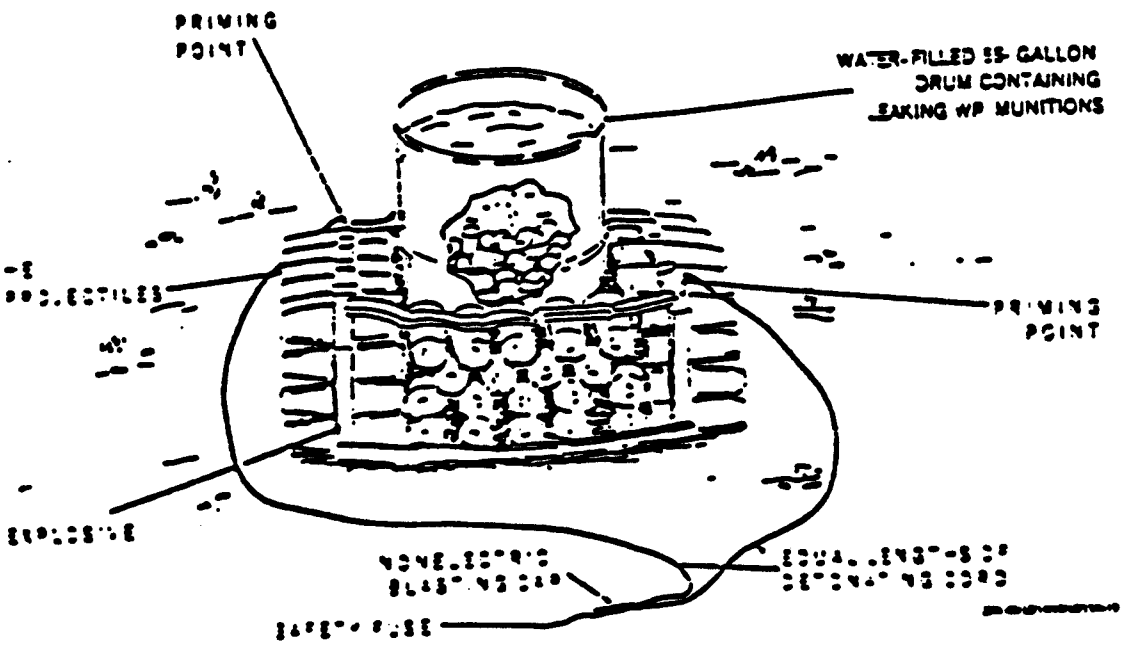

Figure 4-19. Disposal of WP Munitions in Water-Filled Drums

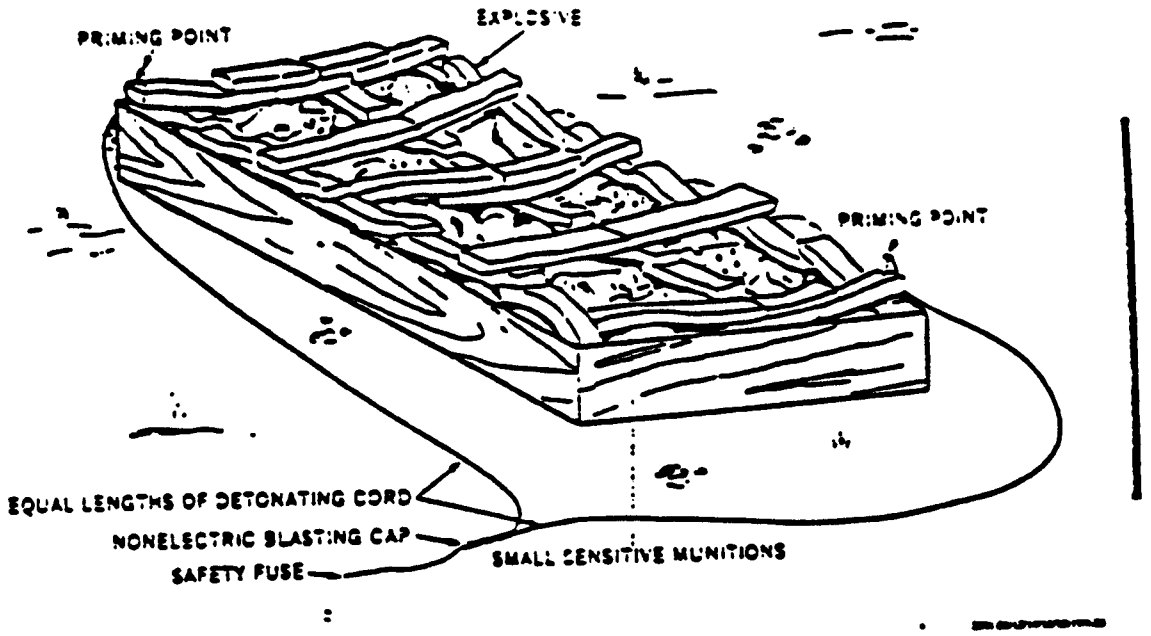

Figure 4-20. Disposal of Boxed Loose ICM's BLU/MLU

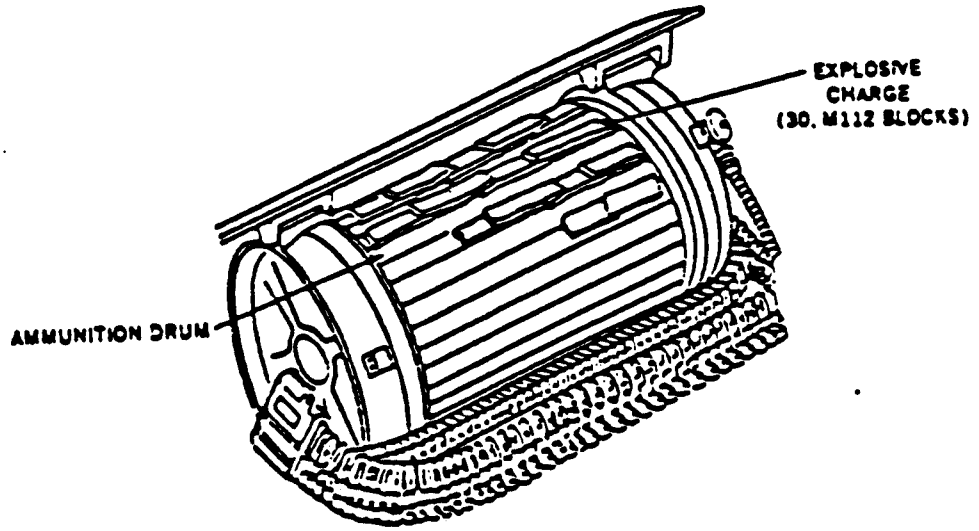

Figure 4-21. Disposal of Aircraft Ammunition Drum

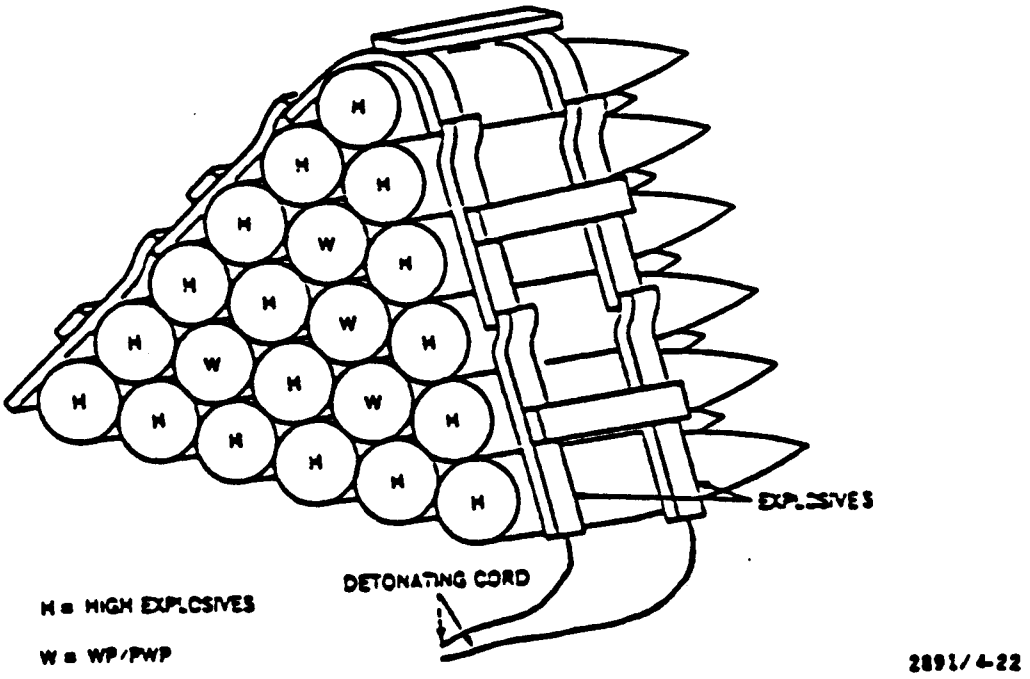

Figure 4-22. Disposal of Mixed Loaded Projectiles

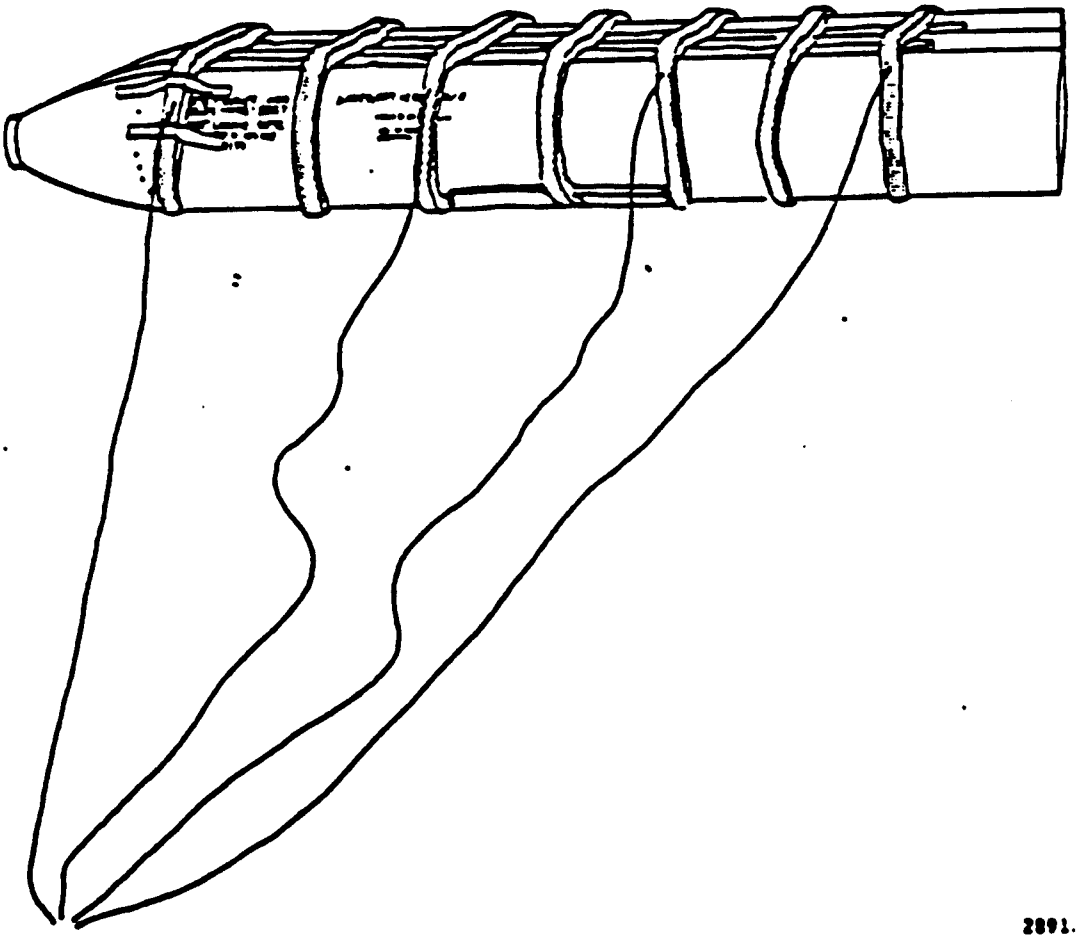

2891. 4-23

Figure 4-23. Disposal of High-Explosive-Loaded Dispensers

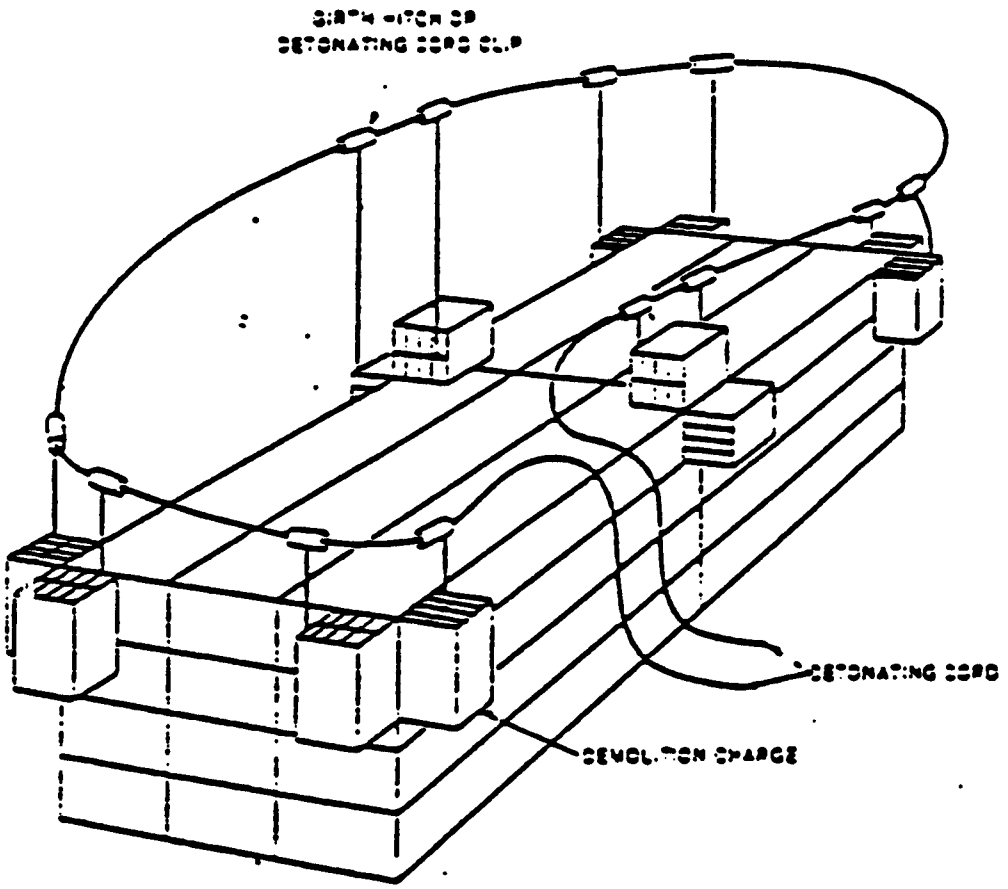

Figure 4-24. Disposal of Boxed Live Munitions

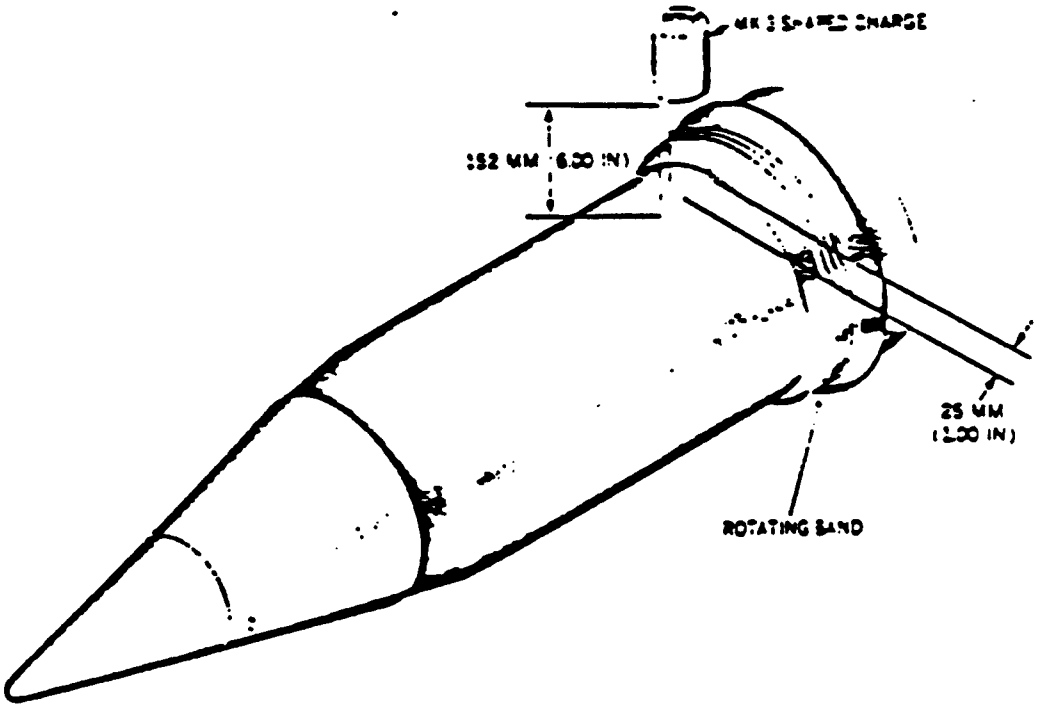

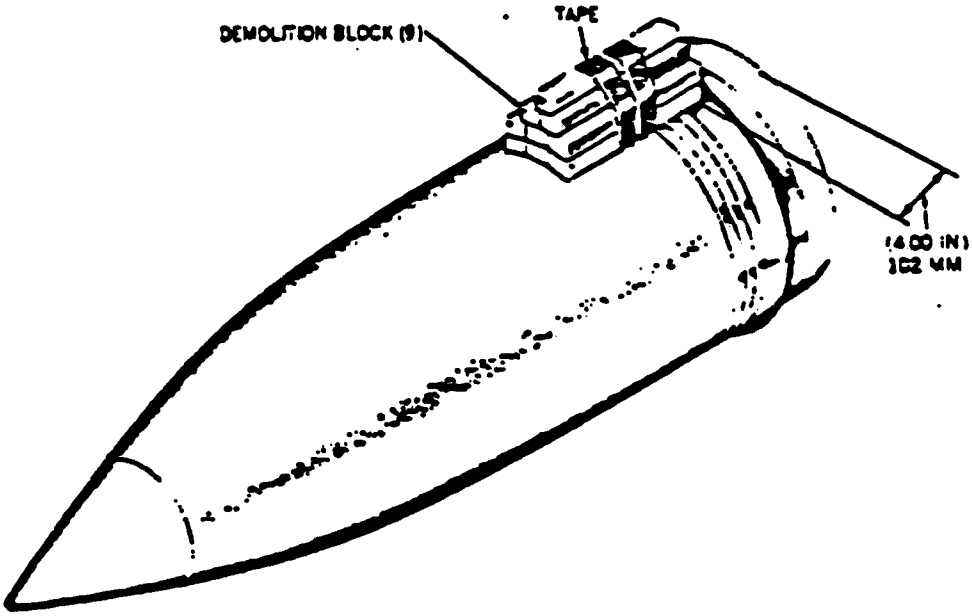

2291/4-25

Figure 4-25. Disposal of 16-inch Projectile AP or FC with Shaped Charge or Demolition Blocks

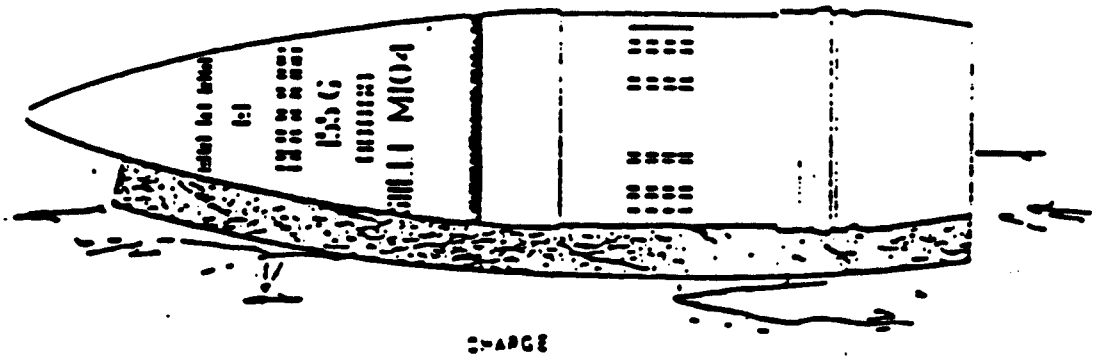

Figure 4-26. Disposal of FS or WP Loaded Projectile

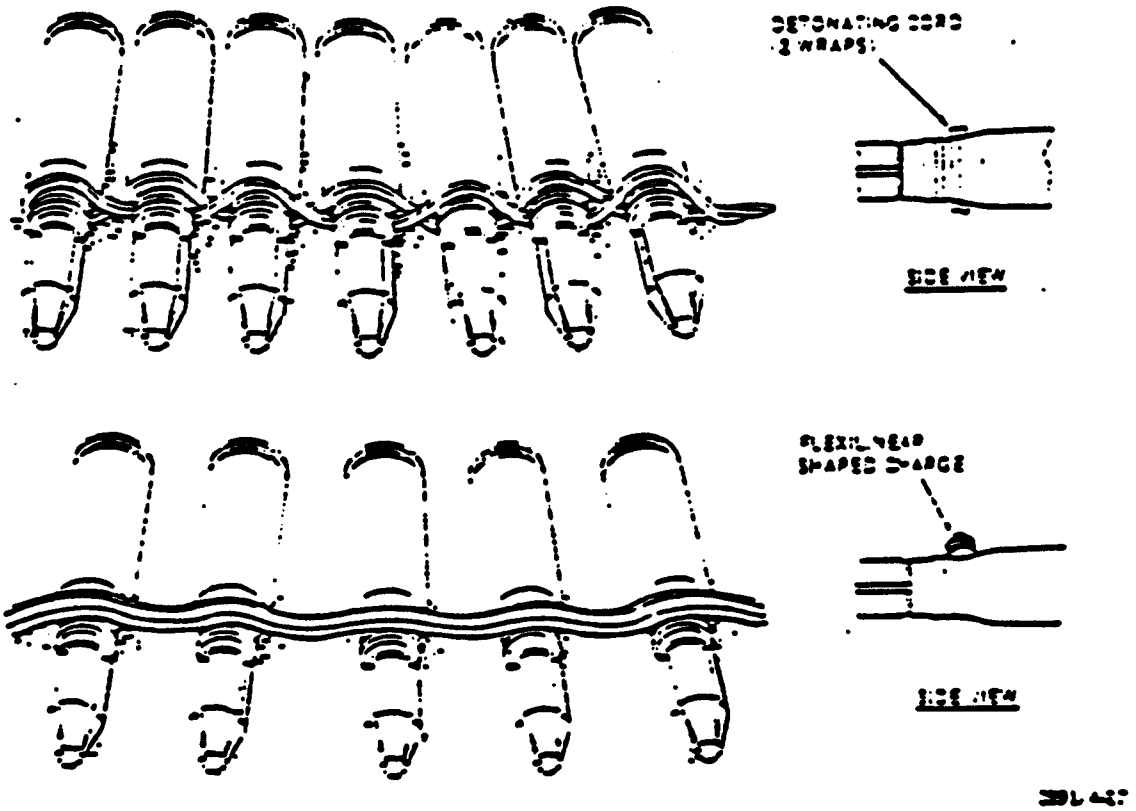

Figure 4-27. Recovery of 20-MM Mk 53 Projectiles Using Detonating Cord or Flexible Linear Shaped Charge

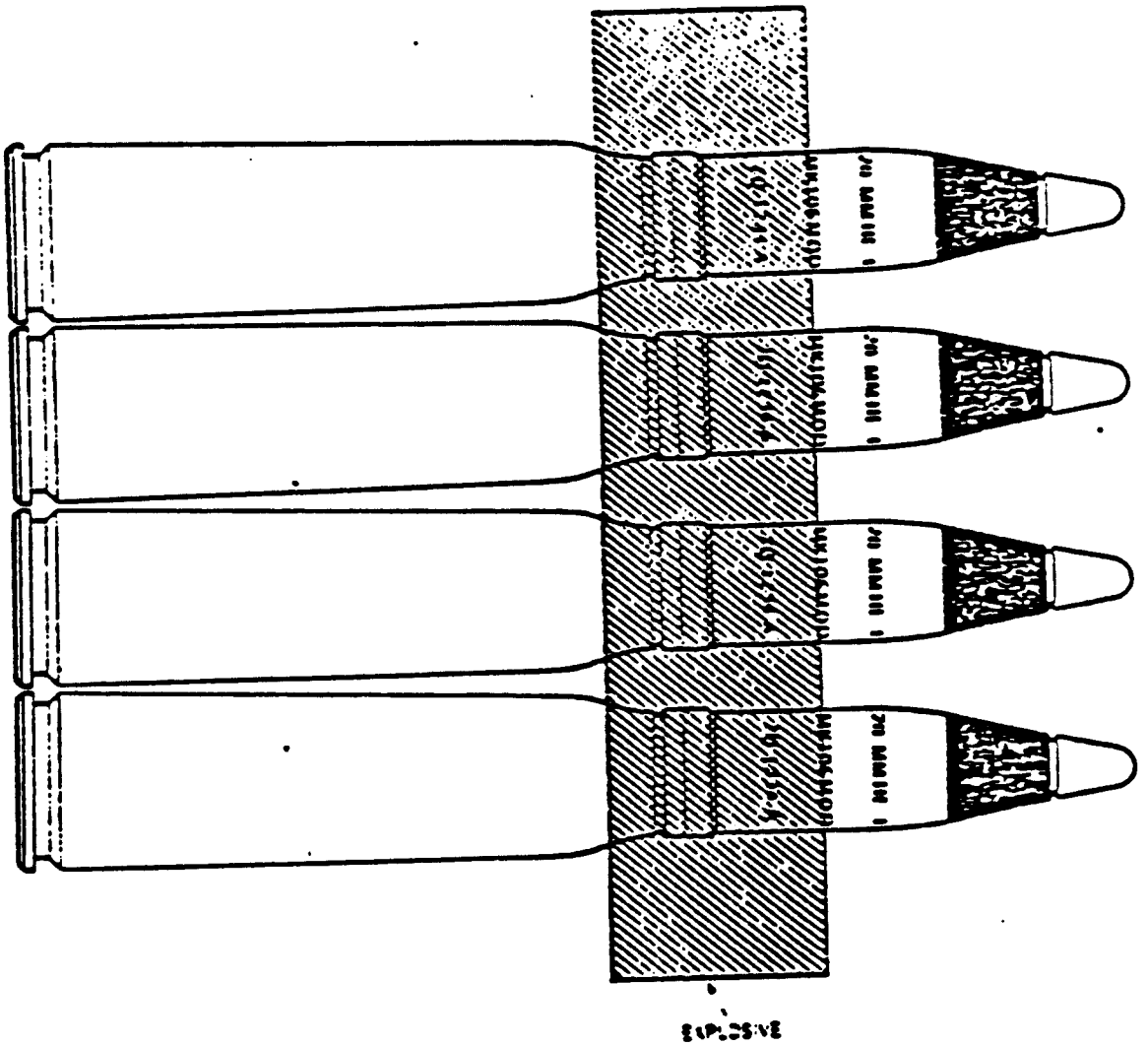

2891.4-28

Figure 4-28. Disposal of 20/30-MM High-Explosive Loaded Rounds

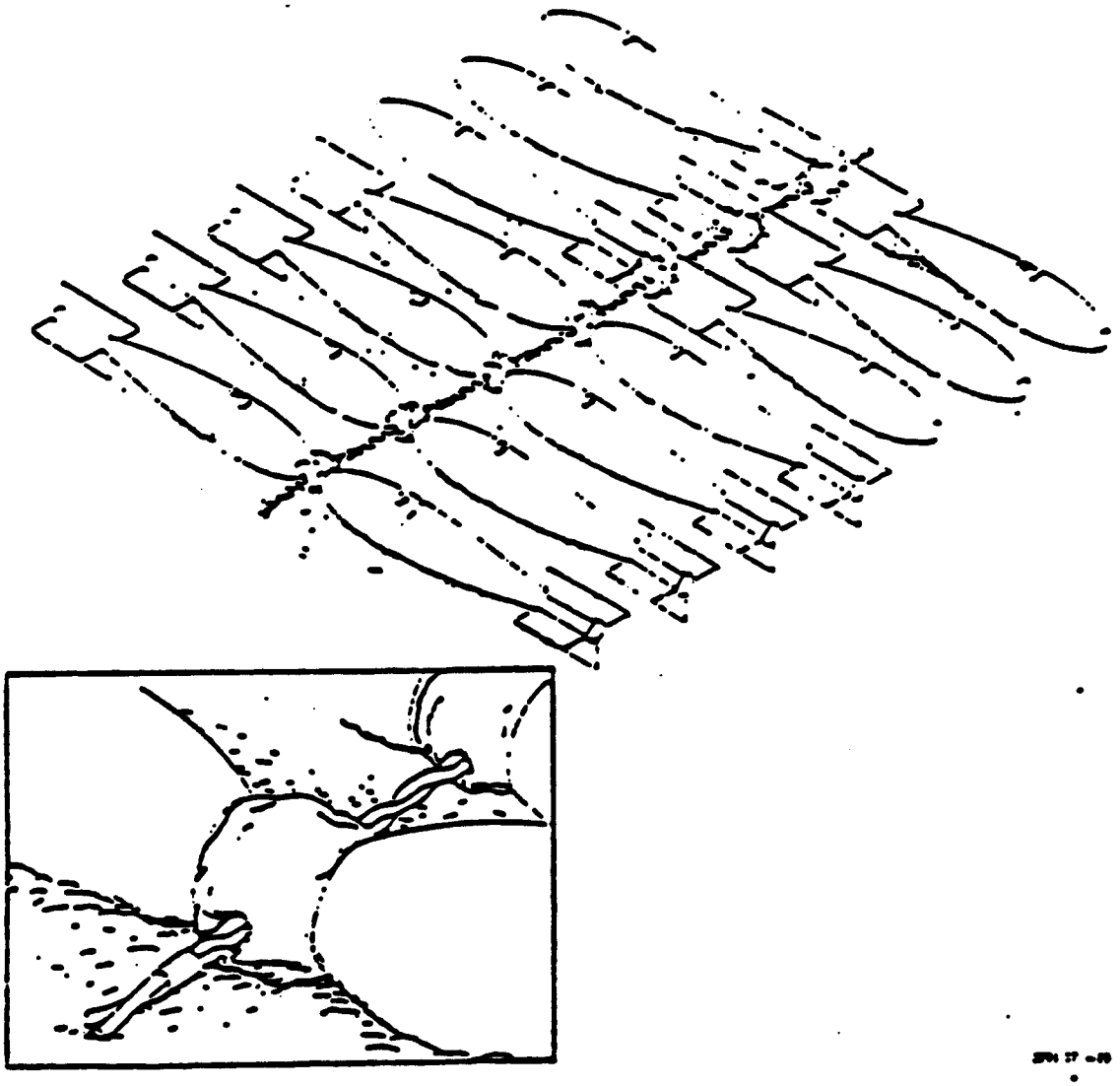

Figure 4-29. Disposal of Multiple Practice Bombs

APPENDIX D1-5
MAINTENANCE OPERATIONS INSTRUCTIONS 136-6

LGEC

DEPARTMENT OF THE AIR FORCE
Headquarters 27th Fighter Wing (TAC)
Cannon Air Force Base, New Mexico 88103-5000

MAINTENANCE OPERATING INSTRUCTION (MOI) 136-6

16 DEC 1991

Armament

CONTROL AND ACCOUNTABILITY OF UNIT TRAINING MUNITIONS

This maintenance operating instruction (MOI) establishes procedures for the control and accountability of unit training munitions. Squadron maintenance officers, the equipment maintenance squadron (EMS), munitions branch supervisor, and each flying squadron/combat munitions unit (CMU) supervisor will ensure compliance with this directive. References: AFR 67-1, TACR 66-5, AFR 125-37 and CAFBR 67-11.

1. General: This directive gives guidance for the issue, turn-in, control, and accountability of conventional training munitions loaded on aircraft for expenditure IAW USAF/TAC approved peacetime projects/tests and unit training allowances which are authorized in AFR 50-21. The wing weekly flying schedule, the daily revised schedule and operation order or plan will be used as a basis for issuing munitions. All personnel involved in operations which handle or control unit training munitions will be knowledgeable of this directive and comply with its contents.

2. Procedures:

a. Each CMU dispatch will:

(1) Direct line delivery to scheduled aircraft for upload/download as required to support the daily flying schedule.

(2) Compute the weekly munitions requirement in conjunction with the supply point custodian to support the flying schedule.

b. Each CMU flightline support section will:

(1) Perform a beginning-of-day munitions count on all flightline trailers departing the munitions storage area (MSA).

(2) Prepare frag sheets for the flying squadrons and have the line delivery member on the bomb rack assembly (BRA) trailer performing flightline delivery sign the form verifying the quantity of each type of munitions loaded on the BRA trailer.

(3) Deliver munitions to aircraft locations as directed by the CMU dispatcher or CMU shift supervisor between the hours of 0600 and 0200 for routine flying unless coordination has been made by the flying squadron 24 hours prior to the required deliveries.

(a) Maintain a running count by recording the time, aircraft number, type of load, quantity, lot number, and indicate either upload or download on frag sheets.

(b) The load crew member's signature will be entered in the gain block for uploads and the line delivery member's signature will be entered for downloads.

(c) Make sure that any unserviceable munitions are segregated and have a properly filled out AFTO Form 350, Reparable Item Processing Tag, attached. This form will be made out by the person who discovers the unserviceable condition.

(4) Stay with the frag trailer or ensure it's secure at all times and give munitions only to loading personnel. This availability does not imply that the line driver will be required to stay on the flightline but will be readily available for dispatch.

Supersedes 27 FW MOI 136-6, 26 Jul 91
No. of Printed Pages: 3
OPR: 27 EMS/MAEC
Approved by: Colonel Ronald J. Later and Colonel Donald A. Lamontagne
Editor: Sgt Jessica Chapman
Distribution: F, X (FTD 526)

(5) Pick up expended carts from the flying squadron as required and return them to the Munitions Storage Area (MSA) for disposition.

(6) Record all flightline trailer replenishments for the day on frag sheets.

(7) Record on frag sheets an inventory of the line delivery trailer for crew and shift changes.

(8) Perform an end of day munitions count at all flightline trailers and annotate the status on frag sheet.

(9) At the end of the flying day, the completed AF Forms 2434, Munitions Configuration and Expenditure Document, with line counts will be picked up from each flying squadron. At that time, it will be reconciled with the frag sheets(s). Any discrepancies noted will be corrected prior to issue of the following day's frag. This includes accountability of all safing blocks for BDU-33s and all hardware delivered with missiles (safe/arm keys, dome covers etc.).

(10) Account for all munitions issued to support the flying schedule not later than 2 hours after the last aircraft is downloaded. This includes safing blocks for BDU-33s and all hardware delivered with missiles (safe/arm keys, dome covers, etc.).

(11) Reconcile expenditures at the end of the flying day using the AF Form 2434, flying squadron line count and line delivery frag sheets.

(12) Line delivery frag sheets with inventory counts will be collected and all documents will be given to the Munition Supply Point Custodian.

c. Supply Point Custodian will:

(1) Coordinate with line delivery to ensure that an adequate working stock is maintained in building 2140 for flightline delivery.

(2) Verify expenditures determined by reconciliation transactions and prepare documentation IAW AFR 67-1, Vol II, Part II, Chapter 33, to drop expended munitions from the supply point.

(3) Coordinate with the CMU dispatcher in determining the amount of munitions required for issue in order to support his flying squadron's flying schedule.

(4) Sign for all issues made to the supply point on DD Form 1348, DOD Single Line Item.

(5) Maintain a running account of munitions available for use.

(6) Maintain supply point documentation as outlined in CAFBR 67-11, Munitions Customer Support Procedures.

(7) Coordinate with the flying squadron representative and line delivery personnel on account discrepancies.

(8) Account for reconciliation discrepancies as follows:

(a) Reverify reconciliation computations between the AF Form 2434, frag sheet, start of day count, and end of day count.

(b) Recount munitions on flightline delivery trailers if necessary.

(c) Contact concerned flying squadron personnel to verify AF Form 2434 annotations and line counts as required.

(d) If reconciliation cannot be accomplished by the above steps, contact the CMU supervisor or Munitions Branch supervisor and the flying squadron weapons flight chief for assistance.

(e) In the event munitions cannot be accounted for, the CMU dispatcher will then notify the appropriate authority IAW their special action checklists.

(9) Coordinate with the Combat Support Unit (CSU) on all unserviceable items requiring disposition.

d. Flying squadrons will:

(1) Complete an AF Form 2434 showing all transactions during the flying day i.e., uploads, downloads, diverted aircraft, items expended, loads on cross country aircraft, crossloads, etc., and end of day line count of munitions (if any) still loaded on aircraft.

(2) Be responsible for all munitions in their control that are awaiting aircraft loading or return to the MSA, to include BDU-33 safing blocks and all hardware delivered with missiles (safe/arm keys, dome covers, etc.).

(3) Ensure the AF Form 2434 is turned in to the MSA in time to reconcile the account before uploading is started for a new flying day. Munitions may be requested for the following day's loads on an exception basis before the current day's AF Form 2434 is closed out. Exceptions will be justified to and approved by the squadron maintenance officer on a case-by-case basis. These loads will be entered on the next day's AF Form 2434 as soon as the munitions are delivered.

(4) Provide a flying squadron representative to coordinate and assist the supply point custodian on any and all reconciliations of discrepancies. Reconciliation will be accomplished after the last aircraft is downloaded.

RONALD J. LATEK, Colonel, USAF
Logistic Group Commander

DONALD A. LAMONTAGNE, Colonel, USAF
Operations Group Commander

SUMMARY OF CHANGES

Change to reflect wing reorganization

APPENDIX D1-6
AIR FORCE REGULATION 127-100

DEPARTMENT OF THE AIR FORCE
Headquarters US Air Force
Washington DC 20330-5000

AF REGULATION 127-100

3 August 1990

Safety

EXPLOSIVES SAFETY STANDARDS

This regulation establishes a central source for safety criteria that apply in explosives operations. It explains hazards and states safety precautions and rules when working with explosives. It allows major commands to give guidance in areas which apply to their mission. It implements Department of Defense Directive (DODD) 6055.9, 25 November 1983, and the DOD Ammunition and Explosives Safety Standards outlined in DOD Standard 6055.9, and agrees with Occupational Safety and Health Administration (OSHA) Standard 1910.109.

When this regulation is in conflict with other Air Force directives, immediately notify HQ AFISC/SEWV, Norton AFB CA 92409-7001, through command channels.

Send recommendations for change or correction, as well as general correspondence about the contents of this regulation, through command channels to HQ AFISC/SEWV, Norton AFB CA 92409-7001.

The inclusion of names of any specific commercial product, commodity, or service in this publication is for information purposes only and does not imply endorsement by the Air Force.

	Paragraph	Page
Chapter 1—EXPLOSIVES SAFETY PROGRAM ELEMENTS, RESPONSIBILITIES, AND REQUIREMENTS		
Section A—General Instructions		
Purpose of This Regulation	1-1	10
Use of This Regulation	1-2	10
Section B—Explosives Safety Program		
General Information	1-3	10
Overseas Storage of US Title Ammunition and Explosives	1-4	10
Storage and Disposal of Non-DOD-Owned Explosives and Other Hazardous and Toxic Materials	1-5	11
Mobility Planning	1-6	12
Section C—Commander's Risk Assessment		
Risk Assessment	1-7	12
Chapter 2—SAFETY PRECAUTIONS		
Section A—General Guidance		
General Information	2-1	15
Personnel Qualifications	2-2	15
Use of Written Standards	2-3	15

Supersedes AFR 127-100, 20 May 1983. (See signature page for summary of changes.)
No. of Printed Pages: 220
OPR: HQ AFISC/SEWV (Lt Col John R. Wysowski)
Approved by: HQ AFISC/SE (Brig Gen James M. Johnston III)
Writer-Editor: R. M. Downey
Distribution: F

PLEASE RECYCLE

	Paragraph	Page
Local Written Procedures	2-4	15
Personnel and Explosives Limits	2-5	15
Static or Public Display	2-6	16
Safety Certification of Munitions Systems	2-7	17
Fireworks Displays	2-8	17
Handling and Movement Precautions	2-9	17
Operational Hazard Analysis	2-10	17
Fencing and Placarding	2-11	17
Housekeeping	2-12	18
Smoking	2-13	18
Hand Lights	2-14	19
Hunting	2-15	19
Training Ammunition	2-16	19
Simulators and Smoke Producing Munitions	2-17	19
Section B—Testing, Disassembly, and Modification of Explosives Items		
General Information	2-18	20
Technical Personnel and Guidance	2-19	20
Authorized Operations	2-20	20
Protective Requirements	2-21	20
Section C—Handling and Maintenance of Aircraft, Remotely Piloted Vehicles (RPV), and Drones Containing Explosives		
General Information	2-22	20
Forward Firing Munitions	2-23	20
Section D—Use of EOD Tool Kits at Off-Range Locations		
General Information	2-24	20
EOD Tool Kits and Procedures	2-25	20
Authorized Operations	2-26	21
Chapter 3—FIRE PROTECTION		
General Information	3-1	22
Training	3-2	22
Fire Drills	3-3	22
Fire Exit Drills	3-4	22
Alarms	3-5	22
Fire Prevention Requirements	3-6	22
Auxiliary Firefighting Equipment	3-7	24
Storage of Water for Firefighting	3-8	24
Access to Fire Hose	3-9	24
Limitation of Fire Areas	3-10	24
Reciprocal Agreements for Fire Protection	3-11	24
Public Withdrawal Distances for Nonessential Personnel	3-12	25
Firefighting Guidance Symbols	3-13	26
Posting Fire Symbols	3-14	26
Exceptions on Posting Fire Symbols	3-15	27
Posting Hazard Symbols	3-16	28
Firefighting Procedures for Chemical Agents and Other Toxic Substances	3-17	28
Firefighting at Railheads	3-18	28
Chapter 4—STORAGE AND COMPATIBILITY STANDARDS		
General Information	4-1	33
Basic Criteria	4-2	33
Requirements for Storage Locations	4-3	33

	Paragraph	Page
Storage Magazines	4-4	34
Explosives Stocks	4-5	35
Damaged Containers and Unpackaged or Unserviceable Items	4-6	35
Operations Allowed in Storage Spaces Containing Explosives	4-7	35
Container Repair	4-8	36
Repairs to Explosives Facilities	4-9	36
Licensed Explosives Storage Locations	4-10	37
Exceptions for Storage of Small Arms Ammunition	4-11	38
Safety Requirements for Certain Facilities and Munitions	4-12	38
Base Defense Support Munitions for Dispersed Locations	4-13	41
Storage of Toxic Chemical Ammunition, Agents, and Other Toxic Substances	4-14	42
Rockets and Like Items	4-15	42
Cellular Magazines and Substantial Dividing Walls	4-16	43
Compatibility of Ammunition and Explosive Items	4-17	43
Compatibility Groups	4-18	44
Mixed Compatibility	4-19	45
Exceptions to Compatibility	4-20	45
Prepositioned Demolition Explosives for Emergency Destruction Purposes Involving War Reserve Material	4-21	45
Shaped Charges	4-22	45
Chapter 5—PRINCIPLES AND APPLICATION OF EXPLOSIVES QUANTITY-		
Section A—Principles of Explosives Quantity-Distance (Q-D) Criteria		
General Information	5-1	48
Separation of Explosives Locations	5-2	48
Types of Separations	5-3	48
Description of the Hazard Classification System	5-4	50
Hazard Classes and Divisions	5-5	50
Section B—Q-D Applications		
General Information	5-6	51
Potential Explosion Sites	5-7	51
Explosives Content of PESs	5-8	51
Exposed Sites	5-9	52
Measuring Distance	5-10	52
Determining Q-D Separations	5-11	53
Hardening Exposed Sites	5-12	54
Barricades	5-13	67
Section C—Q-D Criteria For Specific Facilities		
Related Facilities	5-14	71
Rocket Storage, Checkout, and Assembly (RSCA) Building	5-15	74
Loading Docks	5-16	75
Rail Cars or Vehicles Spotted at Operating Buildings	5-17	75
Vehicle Parking Areas	5-18	75
Warehouses	5-19	76
Interservice Explosives Facilities	5-20	76
HASs and Flowthrough Revetments	5-21	76
Munitions in Austere Areas	5-22	80
Emergency Explosives Storage and Operations	5-23	83
Explosives-Loaded Aircraft, Airfield Areas, and Related Support Facilities	5-24	83
Petroleum, Oil, Lubricant (POL) and Hydrazine H-70 Facilities	5-25	84

	Paragraph	Page
Mineral Exploration and Extraction	5-26	85
Section D—Liquid Propellants		
Q-D Storage Criteria for Liquid Propellants	5-27	85
Section E—Risk Assessment and Damage Control Techniques		
Fragment and Overpressure Information	5-28	94
Sample Damage Assessment	5-29	95
Class/Division 1.1 Risk Assessment	5-30	95
Effects on Combat Aircraft	5-31	97
Chapter 6—ELECTRICAL HAZARDS		
General Information	6-1	100
Location of Electrical Equipment	6-2	100
Repairs of Electrical Equipment	6-3	100
Electrical Lines	6-4	100
Electrical Service Lines to Explosives Locations (Except Licensed Explosives Locations	6-5	101
Electrical Motors for Hazardous Locations	6-6	101
Portable Lighting Systems	6-7	101
Permanent Lighting for Storage Magazines	6-8	101
Portable Generators	6-9	102
Flexible Cords	6-10	102
Flashlights and Lanterns	6-11	102
Static Electricity and Grounding	6-12	102
Static Grounding	6-13	102
Installed Systems and Equipment Grounds	6-14	103
Grounding During Electrically Primed Ammunition Operations	6-15	104
Lightning Protection	6-16	104
Testing and Inspection of Lightning Protection Systems	6-17	105
Electrical Testing of Explosives Items, Components, and Weapon Systems	6-18	105
Procedures in Event of Electrical Storms	6-19	106
Grounding Aircraft for Explosives Loading and Unloading Operations	6-20	106
Hazards of Electromagnetic Radiation to Electroexplosive Devices (EED)	6-21	106
Chapter 7—TRANSPORTATION		
General Information	7-1	113
Federal Regulation	7-2	113
Basic Directives	7-3	113
Applying Basic Directives	7-4	113
Local Laws Regulating the Transportation of Explosives and Dangerous Articles	7-5	113
Hazard Classification Requirements	7-6	113
Mailing Prohibition	7-7	113
Authorized Transportation	7-8	113
Compatibility of Explosives During Transportation	7-9	113
Shipping Containers	7-10	114
Shipment of Explosives Which Have Been Damaged or Failed to Function	7-11	114
Guides for Controlling Incoming Explosives Shipments	7-12	114
Damaged or Improper Shipments	7-13	115
Selection of Operators	7-14	115

	Paragraph	Page
Explosives Movement Routes on Base	7-15	115
Temporary Storage	7-16	115
Vehicle and Materials Handling Equipment General Safety Requirements	7-17	115
Battery-Powered Materials Handling Equipment	7-18	118
Gasoline or Diesel-Powered Materials Handling Equipment Safety Precautions	7-19	118
Motor Vehicle Transportation	7-20	119
Transporting Dangerously Unserviceable Explosive Items for Disposal	7-21	121
Railroad Transportation	7-22	121
Movement of Explosives Shipments by Air	7-23	125
Transportation of Explosives by Water	7-24	125
Chapter 8—SITE PLANS, CONSTRUCTION, AND UTILITIES		
General Information	8-1	126
Section A—Explosives Site Planning		
Basic Guidance	8-2	126
Site Plans Requiring AFISC Approval	8-3	126
Weapons Ranges	8-4	127
Facility Modifications	8-5	127
Site Plans Requiring Major Command Approval	8-6	128
Aircraft Operations	8-7	128
Processing Site Plans	8-8	128
Site Plan Development	8-9	129
Clear Zones	8-10	130
Reduction or Redesignation of Clear Zones	8-11	130
Section B—Construction Considerations		
General Information	8-12	131
Buildings	8-13	131
Interior Finishes and Floors	8-14	132
Fire Walls	8-15	132
Reinforced Concrete Walls	8-16	132
Substantial Dividing Walls	8-17	132
Blast Doors	8-18	133
Building Exits	8-19	133
Exit Doors	8-20	133
Safety Chutes	8-21	133
Emergency Exits and Fire Escapes	8-22	134
Stairways	8-23	134
Fixed Ladders	8-24	134
Platforms, Runways, and Railings	8-25	134
Passageways	8-26	134
Roads, Walks, and Gates	8-27	134
Windows and Skylights	8-28	134
Drains and Sumps	8-29	135
Choosing and Installing Hardware	8-30	135
Tunnels	8-31	135
Powerhouse Equipment	8-32	135
Refrigeration	8-33	135
Laundries	8-34	135
Steam for Processing and Heating	8-35	136
Ventilation	8-36	136

	Paragraph	Page
Electrical Equipment	8–37	136
Outdoor Storage Sites	8–38	136
Collection of Explosives Dusts	8–39	136
Water Flow for Explosives Manufacturing Areas and Loading Plants	8–40	138
Automatic Sprinkler Systems	8–41	138
Deluge Systems	8–42	138
Maintenance and Repairs to Equipment and Buildings	8–43	138
Section C—Disposal Ranges		
General Information	8–44	139
Siting Requirements	8–45	139
Explosive Ordnance Disposal (EOD) Training Ranges	8–46	140
Explosives Contaminated Areas	8–47	140
Aircraft Battle Damage Repair Sites	8–48	141
Chapter 9—CHEMICAL AMMUNITION, DEFENSE BIOLOGICAL RESEARCH MATERIAL, AND OTHER TOXIC SUSBSTANCES		
General Information	9–1	142
Hazards and Safety Requirements	9–2	142
Medical Aspects	9–3	142
Safety, Control, and Surveillance of Chemical Ammunition and Agent Operations	9–4	143
Personnel Protective Equipment	9–5	143
Decontamination Requirements	9–6	144
Transit Handling Requirements	9–7	144
Requirements for Storage of Toxic Chemical Ammunition	9–8	145
Chemical Ammunition and Other Toxic Substance Unpackaging and Preparation Requirements	9–9	145
Preparation and Transportation of Toxic Chemical Ammunition to the Flightline	9–10	146
Loading and Unloading Toxic Chemical Ammunition on Combat Aircraft	9–11	147
Unloading Contaminated or Malfunctioned Ammunition	9–12	147
Disposal of Damaged or Leaking Chemical Ammunition	9–13	147
Jettison Area for Defective or Leaking Toxic Chemical Ammunition	9–14	148
Safety Requirements for Leaking Toxic Chemical Ammunition	9–15	148
Filling Chemical Ammunition	9–16	148
Handling, Transportation, and Storage of Defense Biological Research Material	9–17	148
Chapter 10—SPECIAL CRITERIA FOR MANUFACTURING, LOADING, RESEARCH, DEVELOPMENT, AND TESTING OF EXPLOSIVES		
Section A—General Criteria		
General Information	10–1	151
Building and Construction	10–2	151
Protective Clothing and Equipment	10–3	151
Operational Shields	10–4	151
Quantity-Distance (Q-D) Requirements	10–5	152
Castable Propellants	10–6	154
Mixing of Fuel Compositions and Oxidizers (Batch Method)	10–7	155
Casting Propellant	10–8	156
Block and Extrusion	10–9	156
Grain Contouring and Finishing	10–10	157
Propellant Curing	10–11	157

	Paragraph	Page
Motor Finishing and Assembly	10-12	157
Reworking	10-13	158
Double-Base Solventless Propellants	10-14	158
Military Pyrotechnics	10-15	162
Chlorates	10-16	165
Perchlorates	10-17	165
Peroxides	10-18	165
Nitrates	10-19	166
Powdered Metals--Aluminum, Magnesium, and Aluminum Magnesium Alloys	10-20	167
Charcoal	10-21	168
Sulfur	10-22	168
Volatile Flammable Liquids	10-23	168
Calcium Carbide	10-24	168
Nitrocellulose and Derivatives	10-25	168
Section B—Research, Development, and Testing Operations		
General Information	10-26	168
Blast and Fragment Confinement Facilities	10-27	169
Structure Reinspection	10-28	169
Program and Facility Review	10-29	169
Operational Approval	10-30	169
Operational Limitations	10-31	169
Incremental Safe Separation Distances	10-32	169
Storage Compatibility Exceptions for Laboratory and Field Test	10-33	169
Chapter 11—WAIVERS, EXEMPTIONS, AND DEVIATIONS		
General Information	11-1	170
Waivers, Exemptions, and Deviations	11-2	170
Time Limits	11-3	171
Reviews and Renewals	11-4	171
Cancellation of a Waiver, Deviation, or Exemption	11-5	171
Approval Authority	11-6	171
Preparing Waiver, Exemption, and Deviation Requests	11-7	173
Processing Waiver, Exemption, and Deviation Requests	11-8	173
Waivers and Exemptions on Overseas Storage of US Title Ammunition and Explosives	11-9	174
Waivers on US Air Force Exposure to Potential Explosion Sites of Foreign Governments	11-10	174
Restrictive Easements or Agreements	11-11	174
Preparing Drawings	11-12	175
Chapter 12—APPLYING QUANTITY-DISTANCE PRINCIPLES TO SPECIFIC WEAPONS SYSTEMS AND SPECIAL STORAGE CONFIGURATIONS		
General Information	12-1	176
Section A—Criteria for Specific Weapon Systems		
Strategic Missiles	12-2	176
LGM-30 (Minuteman) Separations	12-3	176
Peacekeeper Separation	12-4	177
Specific Items and Situations	12-5	177
Tactical Missile Separations	12-6	180
Aircraft Criteria	12-7	181

	Paragraph	Page
Section B—Special Storage Configurations		
General Concept	12-8	181
Buffered Storage Concept	12-9	181
Angled Storage of Munitions in Hardened Aircraft Shelters (HAS)	12-10	182
Weapons Storage Vaults in Hardened Aircraft Shelters	12-11	183

Figure(s)

1-1.	Generalize Risk Assessment Procedures	14
3-1.	Fire Symbols	29
3-2.	Chemical Hazard Symbols	30
3-3.	Fire Direction Symbol	30
5-1.	Front, Rear, and Side Exposure Boundaries	53
5-2.	Typical Barricade - Stack Relationships	70
5-3.	Barricade Locations	71
5-4.	Barricaded Modules	82
5-5.	Peak Overpressure vs Scaled Distance	99
6-1.	Recommended Safe Separation Distances for EEDs in Exposed Condition	112
12-1.	Fragment Zones of General Purpose Bombs	183

Table(s)

3-1.	Extinguishing Agents for Fires	31
3-2.	Fire Symbol Hazards and Actions	31
3-3.	Chemical Hazard Symbols and Actions	32
4-1.	Mixing Compatibility Groups	46
5-1.	Quantity-Distance Separation Criteria	56
5-2.	Quantity-Distance Separation Distances	64
5-3.	Class/Division 1.3 Separation Distances	66
5-4.	Class/Division 1.1 Intraline Distances From Earth-Covered Igloos	67
5-5.	RSCA Building Separation Distances	75
5-6.	Intershelter Separation Criteria for Aircraft Survival	78
5-7.	Intershelter Separation Criteria to Prevent Immediate Progagation	79
5-8.	Separation Distances for Missiles in Aircraft Shelters	80
5-9.	Liquid Propellant High Explosives (TNT) Equivalents	87
5-10.	Factors for Converting Gallons of Propellant Into Pounds	88
5-11.	Propellant Hazards and Compatibility Groups	89
5-12.	Hazard Group I Separation Distances	91
5-13.	Hazard Group II Separation Distances	92
5-14.	Hazard Group III Separation Distances	93
5-15.	Hazard Group IV Separation Distances	94
5-16.	Overpressure Effects	98
6-1.	Recommended EED Safe Separation Distances and Power Densities	110
9-1.	Chemical Agents	149
10-1.	Remote Control Requirements for Certain Propellant Processing Operations	153
10-2.	Suggested Quantities per Charge for Blenders	163
11-1.	Quantity-Distance Exception Approval Authorities[1]	172
12-1.	Minimum Distances for Specific Items and Situations	178

Page

Attachment(s)

1. Sources for Non-Air Force Reference Publications 185
2. Glossary of Terms and Abbreviations 187
3. How To Complete AF Form 2047, Explosives Facility License 195
4. How To Complete AF Form 943 for Site Planning 196
5. Sample AF Form 941. Sample Checklist 199
6. How To Complete AF Form 943 for Explosives Waivers and Exemptions 200
7. Sample Letter--Secretary of the Air Force Quantity-Distance Exemption Request 205
8. Subject Index 207

Chapter 1

EXPLOSIVES SAFETY PROGRAM ELEMENTS, RESPONSIBILITIES, AND REQUIREMENTS

Section A—General Instructions

1-1. Purpose of This Regulation. This regulation sets forth safety criteria for operations involving explosives and gives added guidance for establishing an explosives mishap prevention program. These standards apply when DOD personnel, civilian contractors, or host nation personnel are hazarded by US titled munitions.

1-2. Use of This Regulation. This regulation is to be used by Air Force personnel and organizations whose responsibilities and activities involve explosives. This includes chemical ammunition, defense biological research material, or toxic substances used with explosives or munitions. The safety criteria in this regulation are changed when new evidence indicates that either more or less protection is required. Unless specifically "grandfathered," violations resulting from changing criteria will require resiting, waivers, exemptions, or deviation as applicable.

a. This regulation has mandatory provisions as well as preferred and acceptable methods of accomplishment.

(1) The words "will" and "must" are used to state mandatory requirements.

(2) The word "should" indicates a preferred method of accomplishment.

(3) The word "may" indicates a suggested means of accomplishment.

b. There are situations described in this regulation where a mandatory requirement may be relaxed if certain requirements are met. These situations are identified as "exceptions."

c. This regulation provides formal procedures for authorizing temporary deviations from mandatory requirements.

d. Some of the procedures used in carrying out this safety program are outlined in publications that are not published by the Air Force and are not available through standard supply channels. (For example, several are published by the National Fire Prevention Association and some by the American National Standards Institute.) To save the reader's time, the source of these publications is given in attachment 1, with the latest address.

e. Where forms are required by this regulation, computers may be used to complete the forms or computer generated facsimiles may be used, provided they meet the intent and content of the specified form.

Section B—Explosives Safety Program

1-3. General Information. AFR 127-2 gives basic guidance for managers at all organizational levels for the explosives mishap prevention program. It identifies program elements and requirements and assigns responsibilities. The following instructions are in addition to those in AFR 127-2:

a. DOD Manual 4145.26, DOD Contractors Safety Manual for Ammunition and Explosives, is written in language that is directly applicable to the contractor. Guidance to government personnel is contained in Defense Federal Acquisition Regulations Supplements (DFARS). These DFARS require that all contracts involving ammunition or explosives, including all contracts between the prime and subcontractors, include the mandatory use of DOD Manual 4145.26.

b. Construction contractors working within explosives locations on Air Force installations will comply with this publication. The installation engineer will give a copy of this regulation to the contractor at the preconstruction conference. Installation weapons safety personnel will help the contractor to implement these safety standards.

c. Chapter 8 contains policy for applying these standards to facility construction and siting.

1-4. Overseas Storage of US Title Ammunition and Explosives. This regulation applies to all Air Force activities except where the use of other criteria (such as North Atlantic Treaty Organization (NATO) or host nation) has been agreed to in writing or is made mandatory by Status of Forces Agreement (SOFA) or other legally binding agreement.

a. Ammunition and explosives under US title, even though stored in a host country, remain the responsibility of the US commander. Storage must conform with the Air Force stan-

dards for explosives safety prescribed in this regulation as a minimum.

b. Where the quantity-distance (Q-D) criteria and other safety standards of the host nation are more restrictive than US criteria, the criteria to be used will be determined between the US and host nation. Determinations will be formalized in written agreements and reviewed periodically.

c. When possible, host nation coordination and approval should be accomplished to prevent further encroachment and additional hazards. If this coordination has potential adverse mission impact, HQ AFISC/SEWV should be contacted for guidance regarding required actions.

(1) If US criteria are not acceptable to the host nation authorities, their recommended criteria will be evaluated. Criteria which provide less protection than required by this regulation will only be authorized when an international agreement exists between the US and the host government which absolves the US of any liability in the event of a mishap.

(2) A copy of all agreement documents will be made a permanent part of the real property records. Actual copies of agreements need not be kept at the major command (MAJCOM) when the site plan includes a statement that US and host nation authorities agree on the appropriate criteria and its application.

(3) Two copies of the agreement documents will be sent to the MAJCOM involved and two copies sent to HQ AFISC/SEWV with site plans for review.

d. Within NATO countries, if US Air Force forces occupy leased bases, the safety distances in NATO AC/258-D/258 will apply to exposures outside the base boundary. Within the base, NATO criteria must be used to host nation exposed sites, and the criteria in this regulation must be used to US people and facilities.

1-5. Storage and Disposal of Non-DOD-Owned Explosives and Other Hazardous and Toxic Materials:

a. It is the policy of the Department of Defense not to permit the use of Air Force installations for the storage or the disposal of non-DOD-owned toxic or hazardous materials. The storage, disposal, transportation, and rendering safe of non-DOD-owned hazardous or toxic material, reported or discovered in areas outside of Air Force installations, are primarily the responsibilities of civil authorities.

b. This policy, however, does not apply to:

(1) Agreements with the General Services Administration for the storage of strategic and critical materials in the National Stockpile Program.

(2) Agreements or arrangements between DOD components and other federal agencies on the temporary storage or disposal of explosives, as necessary, to protect the public, or to assist those responsible for federal law enforcement in storing or disposing of explosives when no alternative solutions are available.

(3) Emergency lifesaving assistance to civil authorities on the temporary storage or disposal of explosives.

(4) Those excess explosives generated under an existing DOD contract when the Secretary of the Air Force determines, on a case-by-case basis, that no alternative, feasible disposal means are available to the contractor. The Secretary will consider public safety, available contractor resources, and national defense production requirements when weighing this option.

(5) Arrangements with the Department of Energy for the temporary storage of nuclear materials or nonnuclear classified materials.

(6) Military resources used during peacetime civil emergencies, according to AFR 355-1.

(7) Assistance and refuge for commercial carriers with material of other federal agencies during transportation emergencies.

c. The Assistant Secretary of Defense (Acquisition and Logistics) (ASD(A&L)) may grant exceptions to the policy stated above when such action is essential to protect the health and safety of the public from imminent danger, when the Assistant Secretary otherwise determines it to be essential, and when such assistance does not compete with private enterprise. Such support generally will be on a reimbursable cost basis. In the case of imminent danger, the use of Air Force facilities for the storage of non-DOD-owned toxic or hazardous materials will be temporary and will cease once the emergency situation no longer exists. In all other cases, the assistance shall be terminated as determined by the Assistant Secretary.

d. Commands should send requests for exceptions to these rules through command channels to HQ USAF/LEER, as prescribed in AFR 87-3. Send an information copy to HQ AFISC/SEWV. Exception requests will include, as a minimum, a discussion of alternative solutions, an explanation of essentiality, any appli-

cable environmental documentation (AFR 19-2), and an estimate of the impact of the planned action upon Air Force resources.

e. When an exception is granted, commands must ensure that any non-DOD agency that uses Air Force property for the storage or disposal of toxic or hazardous material obtains all necessary permits, meets proper financial requirements, prepares any required environmental documentation before using Air Force property, and returns the facility to its original condition.

f. When storage or disposal of non-DOD-owned toxic or hazardous materials has been authorized on Air Force installations, plans will be reviewed and approved to ensure that safe and environmentally sound procedures are followed to protect DOD personnel and property.

1-6. Mobility Planning. Each MAJCOM with a mobility or deployment tasking or tasked to support deployed forces must develop procedures and site plans for explosives-loaded aircraft parking locations, receipt, storage, buildup, and delivery of munitions at deployed operating locations. By mutual agreement, responsibilities may be split between the augmented and augmenting MAJCOM staffs. Tasked units should participate in this process at MAJCOM discretion; however, copies of site plans and procedures developed will be furnished to the deploying unit. Preplanning must include:

a. Initial site planning and periodic update as munitions commitments and beddown locations change. This planning must include civil engineering concept plans for constructing required aircraft revetments or protective shelters and munitions storage facilities. For units with a munitions mission but no specific deployment location, site preplanning must be adaptable to any deployment location (chapter 8).

b. Local written procedures (paragraph 2-4) for all phases of munitions operations at the deployed location.

c. Active involvement of explosives safety and munitions personnel from the tasked units. Unless impractical, senior munitions managers and an explosives safety representative should participate in site surveys and be part of the deployment team. If participation by unit safety personnel is impractical, the augmented MAJCOM must ensure adequate explosives safety support is available at the deployment location during planning and beddown.

d. Briefings to tasked unit personnel on the plans and procedures to be used at the deployment location.

e. Procedures to ensure availability of these plans and procedures at the deployed location.

Section C—Commander's Risk Assessment

1-7. Risk Assessment. The Q-D criteria specified by this regulation are based on the best information currently available and are considered necessary to make an informed decision on the proper mix of combat readiness and safety. Deviations to explosives safety standards must reflect the conscious managerial decision that operational necessity outweighs the additional risk that a particular course of action entails. Figure 1-1 is a generalized model for risk management which may be used in the decisionmaking process. The key to using this model is accurate identification of the three risk factors, mishap severity, mishap probability, and mission exposure. Hopefully, this level of risk may be quantifiable (number of casualties, aircraft destroyed, etc.), but it may require a subjective decision. Chapter 5, section E should be used to provide information on the risk associated with specific *management* decisions. The review process outlined in chapter 11 is designed to validate the need for a waiver, exemption, or deviation; however, the local commander is ultimately responsible for acceptance of the additional risk. Below is a method available to commanders to help manage risks:

a. To reduce exposures as much as possible, a potential explosion site (PES) may be sited for different explosives weights for different mission requirements. This three-tiered system would have a sited weight for peacetime, exercise, and wartime conditions. As an example, a PES, such as a hardened aircraft shelter, might be able to hold 110 pounds new explosives weight (NEW) during day-to-day operations without violation, it might be able to contain 1500 pounds NEW for exercises if the flightline barber shop is closed during the exercise; and the same shelter may hold 5000 pounds NEW during wartime. To support this final weight, the golf course would have to be closed to avoid Q-D violations.

b. When evaluating the risk to facilities in these different zones, it is important to recognize that as explosives weights and activities increase, the likelihood of a mishap increases. Use of facilities located in exercise or wartime

clear zones and quantities of explosives at potential explosion sites must be managed to assured Q-D rules are not violated. Detailed management actions, such as evacuation of personnel or removal of important assets, must be specified in local operating and support plans, host-tenant agreements, regulations, operating instructions, and checklists, as applicable. Further, the commander must fully understand the risk and be prepared to accept destruction of the facility in the event of a explosives mishap or hostile action against the PES.

c. Three-tiered siting simply means that procedures are developed to change the nature of exposed sites before allowing explosives to be introduced or weights increased in potential explosion sites. This ensures that Q-D rules are not violated. Requirements to properly site facilities, as specified in chapter 8, remain unchanged under this concept.

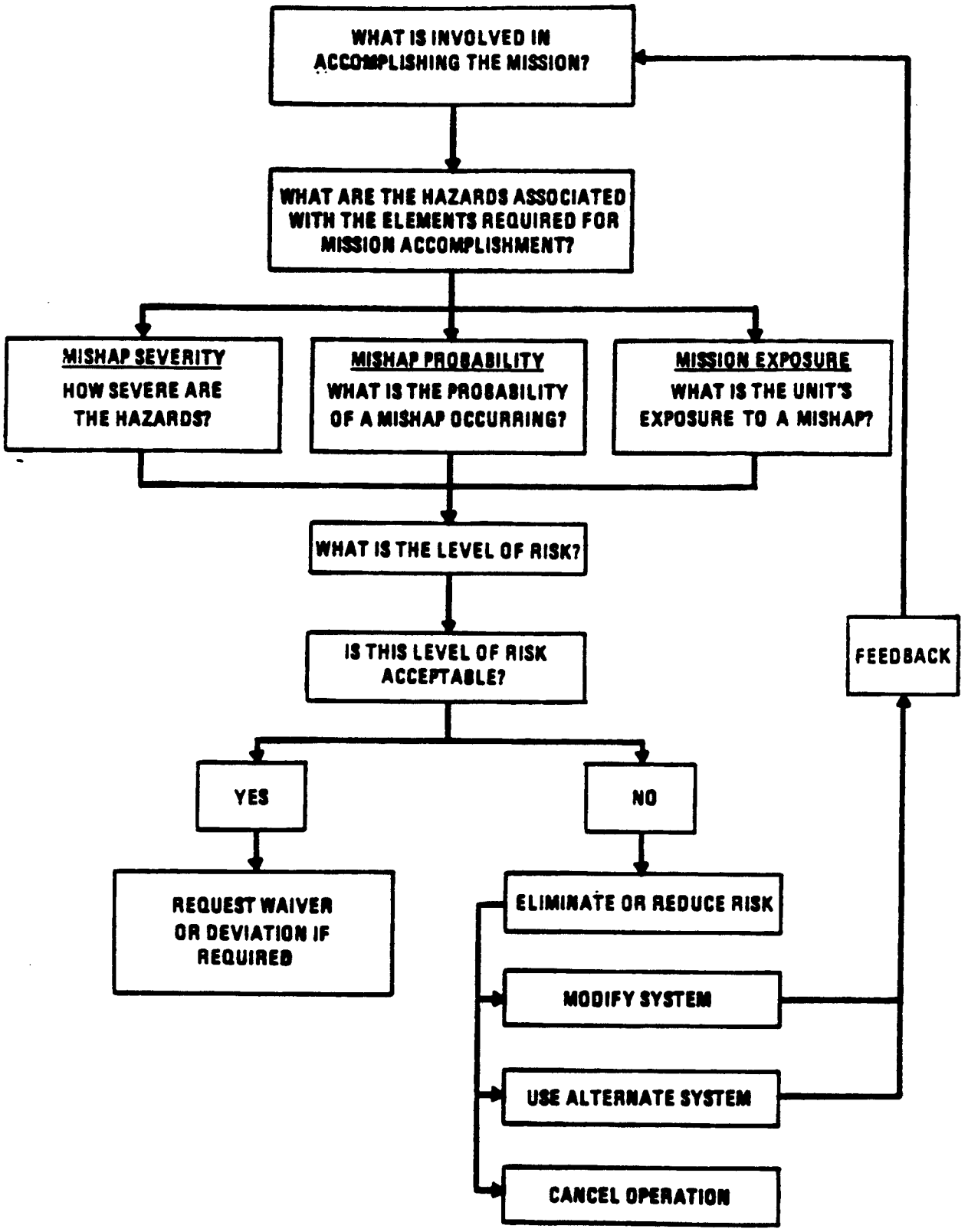

Figure 1-1. Generalized Risk Assessment Procedures.

Chapter 2
SAFETY PRECAUTIONS

Section A—General Guidance

2-1. General Information. This chapter provides general safety precautions for operations involving explosives. The absence of specific guidance on a particular operation does not imply that safeguards are not applicable.

2-2. Personnel Qualifications. Personnel who work with explosives will be trained and qualified in the tasks to be performed. They must understand all safety standards, requirements, and precautions that apply to their work.

2-3. Use of Written Standards. Written standards must be developed and used for each explosives operation. These standards may be included in Air Force publications, such as regulations or technical orders, or in local or higher headquarters standard publications.

2-4. Local Written Procedures. When explosives operations are not covered in sufficient detail by other standard publications, such as technical orders, local written procedures (operating instructions (OI), squadron regulations, etc.) are required. These written procedures will be coordinated with the base safety office and all other involved activities. They will be written and approved as specified in AFR 5-8, but approval will not be lower than the squadron commander level or equivalent. The intent of this requirement is to ensure workers have the information necessary to perform their tasks in a safe manner without being buried in lengthy or numerous local written procedures which merely repeat other standard publications. Locally produced checklists and work cards concerning nuclear operations require MAJCOM approval, according to Technical Order (TO) 00-5-1.

a. Written procedures will be in the language workers understand if they do not understand English.

b. Written procedures are not required for explosives ordnance disposal (EOD) emergency operations in connection with approved render-safe procedures.

c. When local written procedures are required, they will contain at least the following information:

(1) Explosives limits, including the hazard class/division of the explosives involved.

(2) Personnel limits.

(3) Exact locations where operations will be done.

(4) Safety requirements, to include all special requirements for personal protective clothing and equipment.

(5) Step-by-step procedures in proper sequence for doing the task. (You may refer to the TO if this is more effective.)

(6) Actions to be taken during an emergency.

d. Written standards for each explosives operation will be readily available at the work site. Applicable parts of local written procedures will be clearly posted at all stations involved in the operation, such as bays within a building, unless posting is not practical.

2-5. Personnel and Explosives Limits. Operations must be conducted in a manner which exposes the minimum number of people to the smallest quantity of explosives for the shortest period of time consistent with the operation being conducted. For example:

a. Tasks not necessary to the operation will be prohibited within the immediate area of the hazard.

b. Personnel not needed by the operation will be prohibited from visiting. This does not prohibit official visits by safety, quality assurance (QA), management, or inspection personnel.

c. Concurrent operations should be prohibited unless adequate personnel protection is provided.

(1) Testing has shown that "substantial dividing walls" (specific 12-inch reinforced concrete designs) will prevent propagation of an explosion for charge weights up to 425 pounds net explosive weight (NEW). However, at that NEW, the wall will be completely demolished and violently thrown into the adjacent bay, causing serious injury and/or death to the occupants of that bay. The relationship that describes whether these walls will be breached by an explosion is a function of the thickness of the wall, the standoff distance from the explosives to the wall, and the amount of explosives (NEW). The equation below calculates the maximum explosive weight W (in pounds), for

any given standoff distance D (in feet), that, if not exceeded, will prevent breaching of a 12-inch reinforced concrete wall. At these charge weights, the far side of the wall will experience severe spalling which may cause serious personnel injury; however, the survival of the occupants of that bay is considered likely. Paragraph 8-16d and AFM 88-22 contain information and procedures for providing a greater degree of personnel protection.

$$W = 9.88\ D^{0.858}$$

This equation produces the following parameters:

Standoff Distance	Maximum NEW Permitted To Preclude Preaching
3	25
5	39
7	52
10	71
15	100
20	129

(2) When several operations must be done concurrently in a single building, the layout should be planned to separate the operations by substantial dividing walls, barricades, or other means to ensure the maximum personnel protection practicable. If an operation requires NEWs in excess of those that will prevent breaching of a wall, the bay adjacent to the breached wall should be vacated. If the maximum credible event (MCE) in the operating bay exceeds 425 pounds, explosives should also be removed from the bay adjacent to the breached wall. Operations can safely be conducted concurrently in the remaining bays provided they satisfy the above criteria to each other. It is not necessary to determine whether the wall on the far side of the adjacent bay will be breached. The energy required to break up the near wall will substantially reduce the pressure acting on the far wall. When making these determinations, the explosives involved in the MCE will be used; therefore, placement of munitions within the bay to prevent propagation between them is important and can reduce the MCE significantly. For information on breaching of other than 12-inch walls, contact HQ AFISC/SEWV.

(3) For practical purposes, a bomb build-up operation may be subdivided into several individual operations which are conducted in adjacent bays. In this case, these adjacent bays are considered as one bay. A vacant bay should be maintained between bomb build-up and other operations since the NEW will grossly overload the intervening wall.

(4) The above guidance is not intended to change operations in a special weapons integrated maintenance facility. The layout and materials flow through this facility have been previously approved.

d. Personnel and visitor limits must be clearly posted at each operation and must not be exceeded when explosives are present in the operating area. Posting personnel limits is not required in a magazine used exclusively for the storage of explosives or in licensed facilities when the license specifies these limits. Limits for aircraft parking areas, disposal ranges, vehicle parking areas, and similar locations do not require posting but should be included in local written procedures.

e. Each worker must ensure that the explosives limits set for the work site are not exceeded. Limits may be expressed in units of weight, trays, boxes, pallets, or other units which may be more easily observed and controlled.

f. Explosives limits will be based on the minimum quantity of explosives sufficient for the operation and will be consistent with Q-D separation criteria.

g. The maximum amount of explosives of each class/division allowed will be clearly posted in each room, cubicle, magazine, or building used for storing explosives. For operating locations, post the operating limits for the operation being conducted. Separate posting of explosives limits is not required at licensed locations if the license is conspicuously posted. Explosive limits also need not be posted on demolition or EOD training ranges. However, limits should be included in local written procedures.

2-6. Static or Public Display. Live explosives items will neither be used for display nor loaded or installed on display aircraft. Explosives items will not be rendered inert for this purpose unless authorized by the specific Air Force Logistics Command (AFLC) item manager or Air Force Systems Command (AFSC) system program office (SPO).

a. Live or expended ammunition should be removed from aircraft gun systems, if feasible. If infeasible, gun systems must be made mechanically and electrically safe before the aircraft is placed on display.

b. Operational aircraft may be displayed without removing explosives components of

egress and life support systems. Proper technical order safety precautions will be taken and visiting personnel will not be allowed near actuating controls.

c. If installed, ejection cartridges should be removed from external stores release systems, if feasible. If infeasible, ensure that safety pins and devices cannot be easily removed and firing circuits are isolated (for example, circuit breakers pulled).

d. Procedures for static display of aircraft are contained in 00-80G-series technical orders.

e. The public will not be granted access to explosives storage or operating locations where such contact is not required as part of the duties of the agencies.

2-7. Safety Certification of Munitions Systems. All nonnuclear munitions systems used by the Air Force require safety certification, as specified in AFR 127-16. Local purchase of commercial explosives or munitions items is prohibited unless they are stocklisted, approved for local purchase by AFLC, or listed in TO 11A-1-46. Submit requests for AFLC approval according to AFM 67-1, volume I, part 1, chapter 8. If an emergency requirement exists, the MAJCOM must provide justification for approval to use to HQ AFISC/SEWV. Air Force laboratories or research and development activities are exempt from the purchasing limitations of this paragraph.

2-8. Fireworks Displays. Commercial fireworks for use in base holiday celebrations do not require AFR 127-16 certification or AFLC approval if fireworks are transported, stored, set up, and fired only by commercial firms or qualified pyrotechnic technicians licensed under local laws. Commercial fireworks which are confiscated or found on base will be placed in isolated storage until they can be destroyed by qualified personnel.

2-9. Handling and Movement Precautions. Explosives will be handled only by trained personnel under the supervision of an individual who understands the hazards and risks involved in the operation.

a. Detonators, initiators, squibs, and other such electrically or mechanically actuated devices required for operations, such as loading, EOD, and egress maintenance, will be carried in protective containers. The containers must be designed to prevent item-to-item contact. Containers will be marked to identify the contents.

b. Bale hooks will not be used to handle explosives.

c. Nails may be used to secure covers or make repairs on explosives containers only if there is no hazard to the explosive item or of penetrating protective coverings.

d. Nails and other packing materials will comply with special packaging instructions, military specifications, or Department of Transportation (DOT) specifications applicable to the item.

e. Munitions will not be tumbled, dragged, dropped, thrown, rolled, or "walked." Containers designed with skids may be pushed or pulled for positioning.

f. Unpalletized conventional high explosive bombs or those munitions authorized by the item TO may be rolled if lugs or other projections have been removed or if they are protected by dunnage rails during such movement.

g. Conveyors, chutes, hand trucks, and forklifts may be used in atmospheres and locations where they will not create hazards.

h. Sectional roller conveyors used to move explosives will be supported and the sections interlocked or secured. Boxes containing explosives or munitions will not be used to support conveyors.

2-10. Operational Hazard Analysis. When explosive dust or concentrations of vapors, fumes, or gases from explosives or other chemicals in the work area cannot be eliminated, the using organization will conduct an operational hazard analysis of the work area and the operation as outlined in Military Standard 882B. The analysis must provide recommended procedures, equipment, and precautions necessary to ensure a safe operation. The analysis will be approved by the chief of safety or as designated by the MAJCOM before operations are conducted.

2-11. Fencing and Placarding. Explosives storage areas will be placarded at each entrance. The placard will advise personnel to present proper credentials and turn over prohibited articles to the entry controller or place the articles in containers provided for that purpose before entering the area (paragraph 2-13a(2)(c)). Unauthorized persons must be prohibited from entering this area. The explosives storage area should be protected by a fence around the perimeter. When topography or other

physical conditions make fencing impossible or impractical, the commander should decide what trespass control methods to use. Fences will meet the requirements of AFR 125-37 or AFR 207-1. Where signs must be posted, and where applicable, bilingual signs should be posted.

2-12. Housekeeping. The following are minimum precautions:

a. Waste Materials:

(1) Waste materials, such as oily rags; hazardous waste, such as combustible and explosive scrap; and wood, paper, and flammable packing materials will not be commingled. Each of these categories of waste will be carefully controlled and placed in separate approved, properly marked containers. The containers will be placed outside the facilities, except for containers required at work locations during operations. Working location containers will be emptied as often as needed, but at least once each workday or shift.

(2) Containers for hazardous waste will have covers, preferably self-closing. Hazardous waste includes scrap powder, initiating or sensitive explosives, sweepings from explosives areas, and rags contaminated with these explosives.

(a) These receptacles should have enough liquid, normally water or oil, to cover the scraps or rags, if this does not add to the hazard.

(b) Number 10 mineral oil is useful for covering pyrotechnic, tracer, flare, and similar mixtures. If water is used to cover such materials, scrap should be put in so it is immediately immersed to reduce any production of dangerous gases.

(3) Hazardous waste material will be removed from operating buildings to the disposal area (or an isolated, temporary collection point) at frequent intervals and before leaving at the end of the duty day or shift. When isolated collection points are used, time and quantity limits will be set up to assure timely movement of the material to the disposal area. Hazardous material should not be "stored" in the disposal area but disposed of as soon as possible after arrival.

(4) Hazardous wastes will be disposed of in authorized facilities. Disposal operations will be covered by local written procedures. The base civil engineer will include disposal facilities on waste disposal permits, as required by the Environmental Protection Agency.

b. Cleaning. A regular cleaning program will be set up. Frequency, especially in operating buildings, will depend on local conditions to ensure safe conditions.

(1) General cleaning will not be done during an explosives operation or while explosives are in operating buildings.

(2) Where there are "exposed explosives" (and there is a risk from accumulated explosives), structural members, radiators, heating coils, pipes, and electrical fixtures will be cleaned.

c. Sweeping Compounds:

(1) Sweeping compounds containing wax or oil will not be used on conductive floors.

(2) Cleaning agents that include caustic alkalis must not be used in locations containing "exposed explosives," because sensitive explosive compounds may be formed.

(3) Where there may be "exposed explosives" on the floor, hot water or steam is the preferred method of cleaning. When sweeping compounds must be used, they must be nonabrasive. Such compounds may be combustible but will not be volatile. (Closed cup flash point will not be less than 230°F.)

d. Explosives Recovery and Reuse. All loose explosives recovered as sweepings will be destroyed.

2-13. Smoking:

a. Smoking is prohibited in all explosives storage or operating areas or locations, except as permitted below.

(1) Smoking may be allowed within an explosives area or location in specially designated and posted "authorized smoking areas." A certification of approval by the fire chief will be displayed in each designated smoking location.

(2) At designated smoking locations, the following minimum precautions will be taken:

(a) Provide suitable receptacles for cigarette and cigar butts and pipe heels.

(b) If power is available, electrical pushbutton type lighters that cut off when pressure is released or when the lighter tips over are recommended.

(c) Matches or flame-producing devices will not be allowed in areas containing exposed explosives.

(d) A fire extinguisher, as determined by the fire chief, will be provided.

(e) Persons whose clothing is contaminated with explosives or other hazardous materials will not be allowed in such areas.

(f) Persons who work with toxic chemical agents or containers, or other toxic materials, must wash their hands before smoking.

(g) A "No Smoking" sign will be posted at each entrance to an explosives storage area. In areas containing exposed explosives, include a notice that flame-producing devices must be turned over to the entry controller or placed in the container provided.

(3) Smoking on the flightline is governed by the applicable AFOSH standard and local fire protection directives, as determined by the fire chief.

b. Smoking is prohibited in, on, or within 50 feet of any motor vehicle, trailer, rail car, or material handling equipment loaded with explosives items.

(1) Smoking is permitted in "metro" vehicles and in the passenger compartment of security police vehicles when the explosives are inside a closed metal container secured to the vehicle, or when the explosives are on the person of Security Police personnel (in Pouches, etc.), and when authorized by the MAJCOM.

(2) Smoking is permitted in vehicles carrying only personnel wearing survival equipment containing installed explosives items.

(3) MAJCOM may authorize smoking in the cab of stopped cargo vehicles or in security police vehicles patrolling explosives storage areas where the driver is isolated from the explosives cargo. A suitable cigarette lighter and ash receptacle will be available.

c. Smoking is prohibited in any explosives-laden compartment of an aircraft.

2-14. Hand Lights. All battery-operated lights used in hazardous locations (paragraph 6-2a) or in locations containing exposed explosives will be approved as "permissible" by the US Bureau of Mines, or by another recognized authority.

2-15. Hunting. Written permits authorizing hunting within an explosives area may be issued by the commander if hunting conditions can be controlled to ensure life and property are not endangered.

a. Hunting will not be allowed in areas having lethal and incapacitating chemical agents or biological research material for defensive studies. Hunting will not be allowed within 1,250 feet of other munitions storage and operating locations.

b. Where hunting is allowed, maps will clearly define the "hunting" and "no-hunting" areas. Each hunter must become thoroughly familiar with the respective areas and local arrangements.

c. All hunting will conform to applicable state, federal, or host nation regulations.

2-16. Training Ammunition. Blank ammunition for small arms (less than .50 caliber) can be fired within the munitions storage area provided blank adapters are affixed to the weapons. Operating instructions must be approved by the weapons safety office outlining procedures, and including as a minimum the following provisions; fire extinguishers must be readily available, expended brass must be picked up, and appropriate agencies (i.e. safety, munitions branch chief, fire department, hospital) must be notified.

2-17. Simulators and Smoke Producing Munitions. The following applies to the use of these devices during exercises and training:

a. Only US Air Force stocklisted items are authorized for use.

b. Only personnel trained according to AFR 127-2 will be allowed to prepare and activate these devices.

(1) Smoke grenades, pots, generators, and flares. Smoke from grenades and pots can be toxic in high concentrations. All of these devices present a fire hazard, so special care must be taken when functioning these munitions.

(2) Ground burst simulators. These items present a blast hazard and care must be taken with regards to people, facilities, and equipment.

c. The following restrictions apply to the use of these items:

(1) The area where the items are to be used must be free of combustible material within a 10 foot radius surrounding the items.

(2) They will not be functioned within:

(a) One hundred twenty-five feet of any person, vehicle, or building with facing window.

(b) One hundred feet of any facility without facing window (50 feet from hardened facilities, including hardened aircraft shelters.)

(c) One hundred feet of bulk petroleum, oil and lubricants (POL) storage.

(d) One hundred feet of aircraft in the open; 200 feet if aircraft are explosives loaded.

(e) Two hundred feet from explosives operating locations, holding areas, open storage

areas, or butler-type storage facilities; 50 feet from above ground magazines of block, brick, or concrete construction; and 50 feet from earth covered magazines.

(3) Initiated items will be monitored for proper functioning, and residue will be properly disposed of.

(4) EOD will be notified when a munition malfunctions.

Section B—Testing, Disassembly, and Modification of Explosives Items

2-18. General Information. This section gives precautions to be taken in testing, disassembling, and modifying explosives items. (See chapter 10 for more detailed guidance.)

2-19. Technical Personnel and Guidance. All testing, disassembling, and modifying operations will be done by technically qualified personnel and according to approved procedures. Drawings, sketches, and OIs deemed necessary by the supervisor will be available and must be followed.

2-20. Authorized Operations. Live munitions items will not be used for verification, validation, or electrical testing of aircraft or other weapons systems. Modifying, testing, or disassembling explosives items will be allowed under the following circumstances:

a. When authorized by TOs.

b. When approval has been granted by the MAJCOM and the AFLC item manager or AFSC SPO.

c. When disassembly is required for technical intelligence or emergency render safe operations by EOD personnel.

2-21. Protective Requirements. Operational shields, remote controlled devices, fire protection systems, and ventilator systems will be used where needed for protection of personnel and property. Operations such as continuity checks of electrically actuated explosives devices, propellant cutting, explosives component assembly, modification, or disassembly, and demilitarization will require proven operator protection. Operational shields and remote control systems will be designed and tested to give complete protection against all potential hazards. These hazards include explosion, fragments, fire, heat, radiation, high intensity light, or toxic vapors, dependent on the explosive material involved. This paragraph does not apply to rod and gun club operations.

a. When protective devices of a specific design are required by a TO, the TO managing agency (AFSC or AFLC) must ensure that the devices are of a safe design. These devices will be tested with a 25-percent overload and will be approved by the Nonnuclear Munitions Safety Board.

b. When a using command establishes a requirement for protective devices, that command must ensure that the devices are of a safe design.

Section C—Handling and Maintenance of Aircraft, Remotely Piloted Vehicles (RPV), and Drones Containing Explosives

2-22. General Information. Rules for handling and working on explosives-loaded aircraft, RPVs, and drones are contained in the specific aircraft technical order and TO 11A-1-33. See attachment 2, "explosives loaded aircraft."

2-23. Forward Firing Munitions. Munitions such as guns, rockets, missiles, and flare dispensers pose an additional hazard because of their directional response and potentially long range if activated inadvertently on the ground. Aircraft carrying this type of munition should be positioned to present the minimum hazard to personnel and resources in the event of a mishap. Personnel will not stand or park vehicles unnecessarily in front of, or behind, these munitions when they are loaded on aircraft.

Section D—Use of EOD Tool Kits at Off-Range Locations

2-24. General Information. EOD tool kits and procedures using explosively propelled liquids, shots, gases, slugs, or heat may be used on military installations by trained personnel in support of unit inspections and evaluation taskings.

2-25. EOD Tool Kits and Procedures. The following tools and procedures are authorized for off-range operations in support of unit inspections and evaluations:

a. Tools:

(1) MK 1 Remote Wrench.

(2) MK 2 .50 Dearmer.

(3) MK 31 Jet Remote Opening Device (JROD).

(4) Improvised Dearmer (TO 60B-35-3-17).

b. Procedures:

(1) Detonating cord procedures must follow those outlined in TO 60L-1-1-1-1.

(2) Use of incendiary grenades must follow procedures outlined in applicable 60-series TOs.

c. Only the explosive items listed below may be used for off-range unit inspection and evaluation operations. Quantities shown are the maximums authorized for each inspection or evaluation scenario.

(1) Two .50 caliber impulse cartridges.

(2) Two .50 caliber Ball, M2.

(3) Two electric or nonelectric blasting caps.

(4) Six feet of detonating cord.

(5) Thirteen feet of safety fuse.

(6) Two M60 fuse lighter.

(7) Three AN-M14 thermite grenades.

2-26. Authorized Operations. If the following conditions are met, EOD off-range operations using the tools, explosives, and procedures described above are permitted without the use of barricades (see paragraph 8-46, EOD Training Ranges, for information on operations using barricades):

a. Proper notifications are made concerning anticipated noise.

b. The area or building selected for the operation must not be located in an explosives prohibited zone.

c. Essential and nonessential personnel must be evacuated to the applicable withdrawal distances required for an actual situation.

d. Tools that project slugs, fluids, or shot must have a minimum of three filled sand bags placed in front and behind the tool to limit directional force.

e. Only slugs made of plaster, which will disintegrate on impact, may be used in tool sets.

f. The area selected must be free of all fire hazards and only inert training ordnance may be used as a target.

g. Use of MK-31 tool sets inside buildings must be planned and executed to positively prevent any secondary damage resulting from tool use.

Chapter 3
FIRE PROTECTION

3-1. General Information. Fire and excessive heat are two of the greatest hazards to explosives. This chapter gives procedures for dealing with these hazards.

a. Each installation involved in explosives operations will develop prefire plans as required by AFR 92-1. Plans will cover all explosives areas and possible exposures of explosives to fire.

b. Each Air Force fire alarm central communications center (FACC) will have an area map or a computer generated display capable of showing all explosives areas or locations and their fire and hazard symbols and capable of identifying adjacent facilities which are at risk from explosives locations. Locations with less than 1,000 rounds of class/division 1.4 small arms ammunition (.50 caliber or less) are exempt.

c. Personnel in charge of explosives operations will promptly notify the fire department each time there is a change in explosives locations or fire or hazard symbols.

3-2. Training. All operating personnel and firefighting forces involved with explosives must be trained in the precautions to take and how to fight fires. This training will include the application and meaning of each type fire and hazard symbol, reporting fires, sounding alarms, area evacuations, and type and use of proper firefighting equipment. AFVA 127-3 may be used as a training aid for firefighting guidance symbols.

3-3. Fire Drills. Fire drills will be held within the explosives storage area at intervals not to exceed 6 months.

a. Drills are conducted to train firefighting forces, ensure other personnel involved understand their duties, and to evaluate fire alarm systems and firefighting equipment.

b. Fire drills involving a fire department response will be coordinated with the fire chief. This does not preclude unannounced tests of a fire department's response capabilities, provided coordination with the fire chief is accomplished at least 30 minutes before starting the drill. Personnel responsible for conducting these tests will make sure all involved are aware that an exercise, and not an actual fire, is in progress.

3-4. Fire Exit Drills. Frequent fire exit drills should be held when warranted by the size of the building and the number of occupants. If emergency exits other than the usual doors and stairways are provided, these drills will cover their use.

3-5. Alarms. Besides any automatic alarm systems required by AFM 88-15 or other applicable directives, an audible, manually operated fire evacuation alarm system should be installed in each explosives operating building.

3-6. Fire Prevention Requirements:

a. Heat-Producing Devices. The use of devices which produce temperatures higher than 228 °F (109 °C) in any explosives area should be confined to essential, temporary use. Written instructions are required. They should cover the location, purpose, duration, and details of general and explosives safety precautions to be used. Approved furnaces and electrical space heaters which are properly installed in an operating building and approved cigarette lighters are exempt.

b. Vegetation Control. Vegetation control within explosives areas and adjacent areas will be determined by the local commander. The following items should be considered in a vegetation control program:

(1) The primary purpose of vegetation control is to limit the probability of combustible vegetation causing an unacceptable hazard to munitions in storage. Control of combustible materials, such as long dry grass or brush, heavy clippings, or dead wood, is designed to slow the spread of vegetation fires.

(2) Except for firebreaks, those grounds in or near explosives areas or locations should be maintained as unimproved grounds (AFM 126-2). Maintenance should be limited to that necessary to prevent waste of natural resources (for example, erosion) and to prevent or suppress fires. Intensive maintenance should not be performed.

(3) Vegetation control requirements must be balanced with other operational factors, such as cost to control, security, erosion prevention,

and passive defense (camouflage). Each of these factors must be weighed in determining the level of vegetation control in and around a particular explosives area.

(4) Varieties of vegetation that are resistant to burning should be used where feasible. Soil sterilants will not be used where complete removal of vegetation will tend to cause soil erosion. Shrubs and trees planted on earth cover of magazines should be selected so that their weight or root system will not damage the structure. Dead or cut vegetation must not accumulate.

(5) When animals are used for vegetation control, overgrazing of barricade surfaces and igloo earth cover must be avoided to prevent erosion.

(6) Where vegetation growth is ineffective in preventing erosion, a layer of about 2 inches of pressure-applied (Gunite) concrete or asphalt mixture may be used.

c. Firebreaks. Firebreaks will be maintained around each aboveground magazine, operating building or location, outdoor storage site, and ready explosives facility.

(1) A 50-foot firebreak will be maintained around each aboveground magazine, operating building or location, outdoor storage site, and ready explosives facility.

(2) A 5-foot firebreak will be maintained around igloo ventilators.

d. Separation Criteria for Controlled Burning. Intentional burning will not be allowed within 200 feet of any explosives location. The fire chief will approve and provide oversight for controlled burning of vegetation.

(1) The windows, doors, and ventilators of magazines and buildings within 600 feet of burning operations will be closed.

(2) During burning operations, firebrands, sparks, and hot ashes must be controlled. Burning operations should not be undertaken when wind velocity exceeds or is forecasted to exceed 5 miles per hour.

(3) Firefighting personnel and equipment determined necessary by the fire chief will be present during burning operations.

e. Flammable Liquids for Cleaning. Flammable liquids will not be used for cleaning purposes within an explosives area or near explosives, except as authorized by TOs. The use of such liquids will be confined to specially designated work areas. In-use stocks will not exceed 1-workday supply requirement and will be kept in approved safety containers or dispensers.

f. Paint and Other Flammable Materials. Small stocks of flammable materials, such as paints and solvents required to support explosives maintenance operations, may be stored in an explosives storage area. AFOSH Standard 127-43, Flammable and Combustible Liquids, and TO 42A2-1-4 apply.

(1) Materials which add fuel sources, such as wood, paper, and rags, will not be stored with flammables. Containers of flammable materials will not be open except when in use.

(2) Flammable materials in weatherproof containers may be stored outdoors. Grounding is required when contents are being dispensed.

(3) Flammable storage will be located at least 50 feet from explosives locations.

(4) A limited supply of paint may be stored in individual rooms of explosives operating facilities if the requirements of AFOSH Standard 127-43 are met.

(5) At least one fire extinguisher, suitable for the type of materials involved, will be readily available for use (table 3-1).

g. Vehicle Parking. Vehicles, other than those being loaded or unloaded, will not be parked closer than 25 feet to any explosives facility within an explosives storage area or sited facility outside the storage area. This restriction does not apply to approved operations inside hardened aircraft shelters. Local fire and safety officials will establish controls, as necessary, for licensed locations.

h. Operating Support Equipment. The following applies to all support equipment (not including vehicles) powered by internal combustion engines used in connection with explosives and not otherwise regulated under chapter 7 except for operations in hardened aircraft shelters:

(1) This equipment should be located 50 feet or more from explosives, but in no case less than 25 feet. Aircraft ground support equipment will be placed as far away as possible, based on the length of their power cord, if the cord will not allow the minimum 25 feet separation. Equipment may be closer provided adequate ventilation and a fire resistant dividing wall are provided. Equipment designed into, and installed as part of an operating or storage facility is exempt.

(2) Only qualified personnel will use the equipment.

(3) The equipment will be inspected for cleanliness and visual defects before each use. Defects will be documented in the applicable forms.

(4) Equipment that is malfunctioning or has defects that present a hazard will be removed from the operational site for repairs.

(5) Equipment will not be refueled within 100 feet of explosives.

i. Stacking Combustible Material. Containers, dunnage, lumber, and so forth will be stacked in an orderly manner. Stacks should be limited to 1,500 square feet. Bulk stacks of combustible materials should not be closer than intraline distance from locations containing explosives. See paragraph 5-14a for minimum separations. Working quantities may be stacked in the vicinity of explosives. Suitable fire protection equipment will be provided in these areas.

j. Exceptions on Stacking Combustible Material. When needed to prepare for combat operations, empty containers, dunnage, and lumber which cannot be removed while the work is in progress may be temporarily stacked in or near the explosives storage site, if:

(1) The stacks are stable and are separated from the operations as far as practicable.

(2) All of the material is removed upon completion of the operation or once each day (24 hours), whichever comes first.

3-7. Auxiliary Firefighting Equipment:

a. Fire Extinguishers. A minimum of two fire extinguishers, suitable for the hazards involved, will be available for immediate use when explosives are being handled, except as noted in (1) thru (3) below. Extinguishers need not be permanently located at the site. Each extinguisher will be placed in a conspicuous and readily accessible location. Each fire extinguisher will be kept in a full, or fully charged, operable condition. Table 3-1 lists agents for fighting fires.

(1) Flightline fire extinguishers will be provided for each aircraft according to munitions loading manuals, TO 00-25-172, and AFOSH Standard 127-56.

(2) Vehicle fire extinguisher requirements are contained in paragraph 7-17c.

(3) Where more than one crew is working at the same location, only two extinguishers are required.

b. Water Barrels. Water barrels and pails are suitable for fighting class A fires. The base fire chief will decide if they are required and where to put these at explosives locations. At least two pails will be available for each barrel. Water barrels should be winterized as needed. Water barrels may not be needed in an explosives storage area if:

(1) Vegetation control measures are adequate and the area is regularly monitored.

(2) Each crew working in the area has two fire extinguishers readily available.

(3) The installation has an organized firefighting force with equipment for combating grass and brush fires and is capable of timely response.

3-8. Storage of Water for Firefighting. Adequate water to fight fires must be available. See the National Fire Codes, Standards 22, 24, and 1231 to determine adequate supplies. The following should be used as guidelines in separating water supplies from explosives:

a. Water towers will be located at a minimum of inhabited building distance (IBD) from explosives locations.

b. Tanks and reservoirs at or below ground level should be located at the underground POL separations given in table 5-1.

c. When three or more tanks or reservoirs are available in an explosives storage area, or where backup water for firefighting can be made readily available, Q-D criteria for tanks and reservoirs may be reduced when authorized by the MAJCOM.

3-9. Access to Fire Hose. A standard hose, as required, should be prepositioned and connected to fire hydrants where deemed necessary by the fire chief. Hose and accessories will be protected from deterioration by approved hose houses and other protection as determined by the fire chief.

3-10. Limitation of Fire Areas. Openings in fire walls will be provided with approved automatic fire doors. They will be installed and maintained according to NFPA Standard 80, Standards for Fire Doors and Windows. These doors will be clear of obstructions to ensure their proper closing.

3-11. Reciprocal Agreements for Fire Protection. Mutual aid agreements will be established where civilian fire departments provide support for major firefighting efforts or when the host nation provides fire protection.

a. The Air Force fire department will provide adapters if there is any difference in the thread size of equipment connections in use by the cooperating departments.

b. The Air Force fire department will give familiarization training to senior fire officials of cooperating departments for the special firefighting problems in the territory served by their departments. This is to ensure better integration of their forces in an emergency.

c. Non-DOD firefighters who support US Air Force units will be trained in the hazards of fires involving explosives and chemicals as prescribed in this chapter. A mutual aid agreement according to AFR 92-1 will specify the base agency responsible for providing this training.

3-12. Public Withdrawal Distances for Nonessential Personnel. The occurrence of certain accidents, demonstrations, or EOD activities dictates that the public and nonessential personnel be provided minimum protection as specified below. These withdrawal distances are intended for people in the open. Protective structures for personnel or measures taken to suppress blast and fragment effects, at disposals and demonstrations, may be used to reduce the required withdrawal distances.

a. The minimum public withdrawal distances for an accident depends on whether the event involves fire or whether the contents and quantities of explosives are known. If no fire is involved, on-site emergency authorities should determine whether or not to implement minimum withdrawal distances. The minimum distances for an accident involving fire are as follows:

(1) For an accident involving fire of an explosives laden facility, tractor trailer, truck, or rail car of unknown explosives content, the minimum public withdrawal distances are:

Facility, Tractor Trailer, or Truck . .3/4 mile
Rail Car ..... 1 mile

(2) The minimum public withdrawal distances for an accident, involving fire of an explosives laden tractor trailer, truck, or rail car of known content or quantity of "Explosive A" (class/division 1.1. and 1.2) are:

Range (feet) = K105, but not less than 1,250 feet, for nonfragmenting explosive materials.

Range (feet) = K328, but not less than 2,500 feet, for fragmenting explosive materials. For bombs and projectiles with caliber 5-inch or greater, use a minimum distance of 4,000 feet. If known, maximum debris throw ranges, with an appropriate safety factor, may be used.

b. The minimum public withdrawal distance for an accident involving fire of "Explosive B" (class/division 1.3) and "Explosive C" (class/division 1.4) laden tractor trailers or trucks and rail cars is 600 feet and 300 feet respectively.

c. The minimum withdrawal distances for an accident involving fire in an explosives facility of known contents and quantities are:

Fire Symbol	Public Withdrawal Distance (feet)	Special Requirements
1	105 W(lb)$^{1/3}$	Not less than 1250 ft for bulk explosives or not less than 4000 ft for fragmenting ammunition.
2	2500	
3	600	Use IBD for quantities greater than 500,000 lbs.
4	300	

d. If known, maximum debris throw ranges, with an appropriate safety factor, may be used to replace above minimum distances.

e. The minimum withdrawal distances for essential personnel at accidents sites will be determined by emergency response authorities on-scene. Emergency response authorities will determine who are essential personnel.

f. For demonstrations (impact areas) and EODs, the following minimum nonessential personnel withdrawal distances apply:

Range(feet) = K328, but not less than 1250 feet, for nonfragmenting explosive materials.

Range(feet) = K328, but not less than 2500 feet for fragmenting explosive materials. For bombs and projectiles with caliber 5-inches or greater, use a minimum distance of 4000 feet. Items should be positioned so that the lugs and strongbacks and nose and tail plate sections are oriented away from personnel locations.

g. Due to ballistic uncertainties for impact locations of various weapons and delivery systems, where demonstrations involve live fire exercises, range safety considerations will be determined on a case-by-case basis by competent test authorities.

h. There are three general categories of EOD activities that require differing withdrawal distances.

(1) On or off DOD Activity EOD operational incidents (actual threat devices) require the minimum public withdrawal distance of an accident defined in a(1) or a(2) above.

(2) EOD disposal operations and demonstrations conducted on ranges require minimum nonessential personnel separations defined in f above.

(3) Where EOD training (or other explosive demolitions) involve only essential personnel, the minimum separation distances do not apply. On-site authorities determine the minimum distances.

i. The minimum separation distance for essential personnel at disposal operations and demonstrations are to be determined by on-site authorities. These authorities will also determine who are essential personnel.

3-13. Firefighting Guidance Symbols. There are four types of symbols which give guidance for firefighting forces, security police, and other personnel; fire, chemical hazard, firefighting direction symbols, and explosives placards.

a. Fire Symbols. These symbols represent the four explosives divisions, 1 through 4. The hazard decreases as the fire symbol number increases. The hazard is based on the burning or explosive characteristics of the material. Fire symbols do not apply to liquid propellants, except for symbol 1, which is used to indicate a detonation hazard of Group IV propellant. Fire protection for insensitive high explosives (both bulk and filled items) is based on their equivalent storage classification (paragraph 5-8b(5) through (7)).

(1) Each of the four fire symbols is distinctively shaped, with the class/division number shown. See figure 3-1.

(2) The hazard and firefighting precautions for each symbol are summarized in table 3-2.

b. Chemical Hazard Symbols. These symbols are used to identify operating buildings and storage facilities which contain pyrotechnic and chemical munitions or agents and other hazardous material.

(1) Hazard symbols vary with the type of agent. These symbols are described in figure 3-2.

(2) The hazard each symbol represents and the firefighting precautions are summarized in table 3-3.

c. Firefighting Direction Symbol. The "apply no water" sign is intended for use with hazardous materials where use of water may intensify the fire, increase the hazard of explosion, or spread the fire. Posting of explosives locations will be according to TO 11A-1-46, table 2-1. This symbol is described in figure 3-3.

d. Explosive Placards. Explosive A, Explosive B, or Dangerous placards may be used for the transportation of explosives as allowed in chapter 7. Generally, Explosive A placards represent the same hazard as fire symbols 1 and 2, Explosive B placards replace fire symbol 3, and Dangerous placards represent fire symbol 4. See TO 11A-1-46 for the specific placard that applies to each explosive.

e. Posting Symbols. Symbols will be removed, covered, or reversed if the explosives or chemical agents are removed from a facility or location. The person in charge of the operation is responsible for positioning or changing the symbols. The fire alarm communication center (FACC) will be notified each time fire or hazard symbols are changed.

f. Symbol Dimensions. The dimensions shown in figures 3-1 through 3-3 are the normal minimum sizes. Half-size symbols may be used when applicable, such as on doors and lockers inside buildings and hangars.

g. Obtaining Symbol Decals. Decals for fire and chemical hazard symbols may be obtained through normal Air Force supply channels. National stock numbers (NSN) of standard and half-size decals are listed in figures 3-1 through 3-3.

h. Storing Toxic Chemical and Incendiary Items. Toxic chemicals without explosive components may be received as class 6, division 1 poisons (6.1). Incendiary items may be received as flammable solids (class 4) or flammable liquids (class 3). When this occurs, contact OO-ALC/MMWE, Hill AFB UT 84056-5609, who will provide necessary data. Items which contain chemical substances of another commodity class and which do not contain explosive components, may be stored with ammunition items containing explosives and the same chemical substance.

3-14. Posting Fire Symbols. TO 11A-1-46 gives firefighting guidance for each stocklisted munitions item. The fire symbol that applies to the most hazardous material present will be posted on, or near, all nonnuclear explosives locations. It will be visible from all approach roads. One symbol, posted on or near the door end of an igloo-type magazine, is normally enough. One or more symbols may be needed on

other buildings. When all munitions within a storage area are covered by one fire symbol, it may be posted at the entry control point. Backing material for fire symbol decals should be the shape of the decal and should be noncombustible.

a. When different class/divisions of explosives are stored in individual multicubicle bays or module cells, they may be further identified by posting the proper fire symbol on each bay or cell.

b. Where facilities containing explosives are located in a row on one service road and require the same fire symbol, only one fire symbol at the entrance of the row is required.

c. Fire symbols will be placed on entrances to small rooms in buildings that are licensed for storing or holding quantities of explosives. Where the licensed explosives are stored in a locker or similar container, the container will also be marked with the proper fire symbol. They are not required on the exterior of the building, if the building is exempt from Q-D according to paragraph 4-10 and approved by the base fire chief.

d. Aircraft loaded with nonnuclear weapons will be identified in any one of the following ways:

(1) Fire symbols posted at each aircraft or aircraft shelter.

(2) Proper fire symbol posted at an area entry when the same symbol is required for all aircraft in a designated and controlled area. Set up local procedures requiring the FACC to be notified when each aircraft is loaded or unloaded. Give the aircraft tail number, parking location, and the type of explosives involved. During mass loading of three or more aircraft when a fire truck is present, notification is not required after each aircraft is loaded. The FACC must be notified as soon as the last loading is complete.

(3) The method outlined in paragraph 3-15g.

e. Fire symbols may be used as placards on vehicles carrying explosives as outlined in paragraph 7-17b.

3-15. Exceptions on Posting Fire Symbols:

a. Fire symbols need not be posted at parking locations, maintenance facilities, or protective shelters housing aircraft having only exempted devices described in paragraph 5-24c(2) or other installed or loaded class/division 1.4 explosives. This exception does not apply to explosives cargo.

b. Fire symbols need not be posted on operational missile sites (such as Peacekeeper or Minuteman) where only single types of weapon systems are involved. Written firefighting plans or instructions must exist, and personnel concerned must be advised of the hazards involved.

c. Fire symbols need not be posted on locations having 1000 rounds or less of class/division 1.4 small arms ammunition (.50 caliber or less).

d. Fire symbols in this regulation are used unless host nation symbols differ, and by agreement, host nation symbols are used.

e. The responsible commander may, for emergency security purposes, remove symbols on a temporary basis pending resolution of the emergency. In such situations, increased emphasis will be placed on giving prompt and exact information to the fire department about changes in the status of explosives.

f. Fire symbols will not be used at facilities storing nuclear weapons or where both nuclear and nonnuclear weapons are stored and maintained. The following procedures will be used in these situations:

(1) Maintain a storage area facility map or listing in maintenance or munitions control, as applicable, showing the proper TO 11N-20-11 line number for nuclear weapons and components. For nonnuclear munitions, show the fire symbol.

(a) Provide the information on this map or listing to the fire department and update it as changes occur.

(b) If maintenance or munitions control is not staffed on a 24-hour basis, give the above information to the entry controller. The entry controller will keep a map or listing similar to the one in (1) above. This information will be given to firefighters responding to an emergency.

(2) If explosives are stored overnight in the maintenance and inspection building, advise the entry controller (when required) and FACC of the line number or fire symbol for the building.

g. If aircraft are in a designated explosives parking area, fire symbols need not be posted if such areas are described in a local publication, such as the aircraft parking plan, which includes:

(1) The class/division involved.

(2) The governing fire symbol for the parking area.

(3) Procedures to be followed during an emergency.

(4) The requirement to notify the fire department as in paragraph 3-14d(2).

h. Fire symbols will not be posted near aircraft loaded with nuclear weapons. Do not post fire symbols near aircraft loaded with nonnuclear munitions parked within the same designated area as nuclear weapons-loaded aircraft. In these cases, use the procedures in g above. If the munitions loaded on all aircraft are covered by a single fire symbol, the procedures in paragraph 3-14d(2) may be used as an alternative. During nuclear aircraft generation, fire symbols need not be changed at aircraft parking locations solely to comply with this paragraph.

3-16. Posting Hazard Symbols. If chemical or pyrotechnic munitions are assembled with explosive components, then hazard symbols must be used together with fire division symbols. Chemical munitions which do not have explosive components will be identified by the hazard symbol only. Requirements for posting hazard symbols are the same as for fire symbols, except there is no "priority" hazard symbol. If more than one is needed, each will be posted except that no "mask" symbol is required when a "suit" is posted (paragraphs 3-14 and 3-15).

3-17. Firefighting Procedures for Chemical Agents and Other Toxic Substances. These procedures vary according to the type of agent involved and are summarized in table 3-3.

3-18. Firefighting at Railheads. Fires are most likely to occur in the understructure of rail cars. Often they can be extinguished if found in the early stages. Every effort should be made to separate and promptly remove undamaged cars from yards where a fire has broken out. Where explosives operations are conducted at railheads, government railroad personnel should be trained in the use of fire equipment.

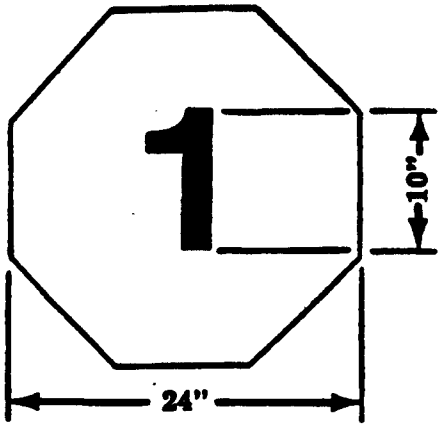

FIRE SYMBOL 1.

Decals: NSN 7690-01-082-0290 (Large)
NSN 7690-01-081-9581 (Small)

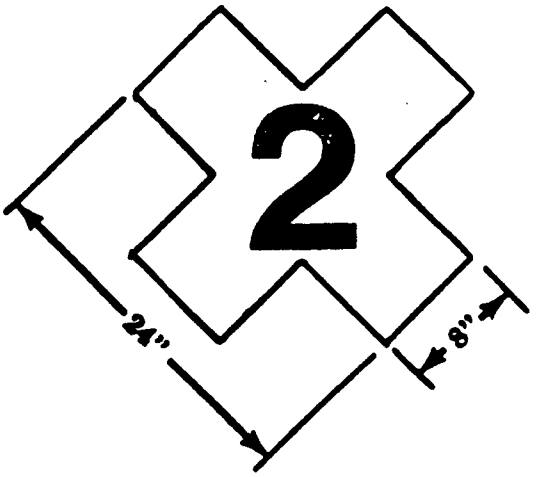

FIRE SYMBOL 2.

Decals: NSN 7690-01-082-0289 (Large)
NSN 7690-01-087-7340 (Small)

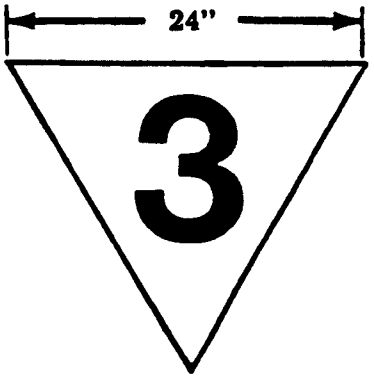

FIRE SYMBOL 3.

Decals: NSN 7690-01-081-9583 (Large)
NSN 7690-01-081-9582 (Small)

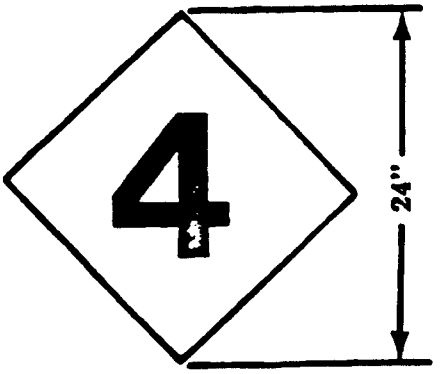

FIRE SYMBOL 4.

Decals: NSN 7690-01-082-6709 (Large)
NSN 7690-01-081-9584 (Small)

Color of Symbols: Orange

Numbers: Black 10" High and 2" Thick

NOTE: Small symbols may be used where appropriate. See para 3 - 13f.

Figure 3-1. Fire Symbols.

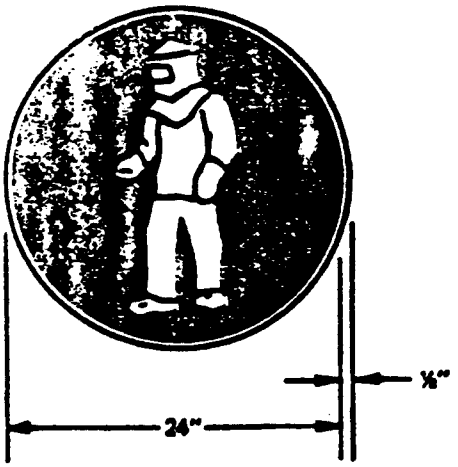

WEAR FULL PROTECTIVE CLOTHING.

Color: Background - Blue
Figure & Rim -
RED for Set 1 Protective Clothing
YELLOW for Set 2 Protective Clothing
WHITE for Set 3 Protective Clothing

Decals: NSN 7690-01-081-9586 (Set 1, Large)
NSN 7690-01-081-9585 (Set 1, Small)
NSN 7690-01-081-9587 (Set 2, Large)
NSN 7690-01-082-0291 (Set 2, Small)
NSN 7690-01-083-6272 (Set 3, Large)
NSN 7690-01-081-9588 (Set 3, Small)

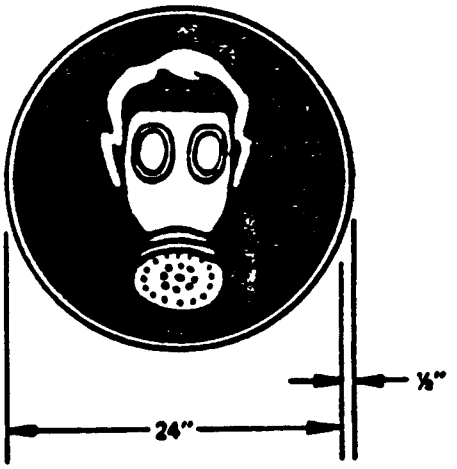

WEAR BREATHING APPARATUS.

Color: Background - Blue
Figure & Rim - White
(This symbol is not required if the Full Protective Clothing symbol is posted.)

Decals: NSN 7690-01-081-9589 (Large)
NSN 7690-01-082-6710 (Small)

NOTE: Small symbols may be used where appropriate See para 3 - 13f.

Figure 3-2. Chemical Hazard Symbols.

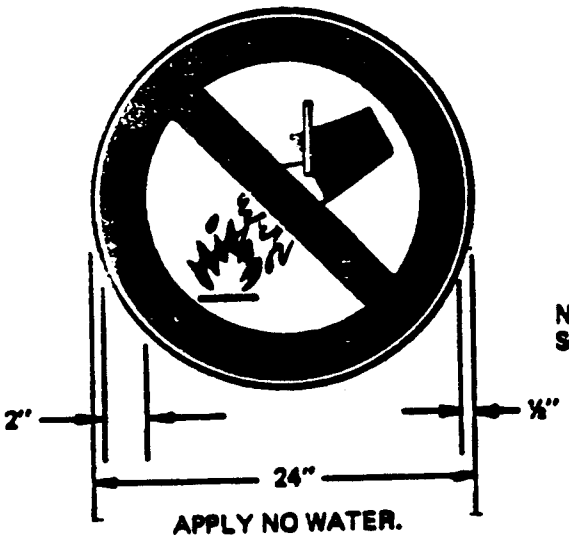

Color: Background and Rim - White
Circle & Diagonal Stripe - Red
Figures - Black

Decals: NSN 7690-01082-2254 (Large)
NSN 7690-01-082-0292 (Small)

NOTE: Small symbols may be used where appropriate See para 3 - 13f.

Figure 3-3. Fire Direction Symbol.

Table 3-1. Extinguishing Agents for Fires.

Type of Fire	Extinguishing Agent
Class A—Combustibles (Materials such as wood, paper, rubbish, or grass)	Water
Class B—Volatile Flammables (Materials such as oil, gasoline, grease, or paint)	Carbon dioxide, Halon, foam, or dry chemical
Class C—Electrical (Electrical Equipment)	Carbon dioxide, Halon, or dry chemical
Class D— Combustible Metals (Magnesium, Potassium, etc)	Dry powder

Table 3-2. Fire Symbol Hazards and Actions.

Fire Symbol	Materials	Hazard	Action/Remarks
1	1.1 Explosives and certain liquid propellants	Mass detonation	1. Will not be fought unless a rescue attempt is being made. 2. If there is suitable separation between nonexplosive and symbol 1 materials and if approved by the fire chief, firefighting forces may attempt to extinguish the fire. 3. If personal safety is in doubt, take suitable cover.
2	1.2 Ammunition and explosives	Explosion with fragments	1. Give the alarm and attempt to extinguish the fire if in an early stage. 2. Firefighting forces should fight the fire. If not possible, prevent the spreading of the fire. 3. Detonations of items could occur. Provide protection from fragments.
3	1.3 Ammunition and explosives	Mass fire	1. May be fought if explosives not directly involved. 2. If WP munitions are involved, smoke is liberated. a. WP munitions may explode. b. Phosphorus should be immersed in water or sprayed with water continuously. 3. For fires involving HC and incendiaries: a. Water should not be used unless large quantities are available. b. Use dry sand or dry powder agent in the early stage. 4. For fires involving pyrotechnics and magnesium incendiaries: a. Protect adjacent facilities and equipment. b. Do not use CO_2 or Halon extinguishers or water on or near the munitions. c. Allow magnesium to cool unless upon flammable material. In this case, use a 2-inch layer of dry sand or powder on the floor and rake the burning material onto this layer and resmother.
4	1.4 Ammunition and explosives	Moderate fire	1. Fight these fires. 2. Expect minor explosions and hot fragments.

Table 3-3. Chemical Hazard Symbols and Actions.

Chemical Symbol	Materials (Compatibility Gp)	Hazard	Action/Remarks
Full Protective Clothing—Set 1 (Red)	Nerve/Blister Agents (K)	Highly toxic as aerosol/vapor	1. Evacuate public 2 miles downwind or 1 mile upwind or to the sides. 2. Use munitions decontamination procedures 3. If explosion does not occur, approach from upwind and extinguish fire.
Full Protective Clothing—Set 2 (Yellow)	Riot Control/Smokes (G) Incapacitating Agents (K)	Toxic as aerosol/vapor	1. Approach from upwind and extinguish fire. 2. Decontamination may be required.
Full Protective Clothing—Set 3 (White)	TEA Smoke (L)	Spontaneously flammable	1. Do not look at burning material. 2. Do not use water.
	White Phosphorus (H)	Spontaneously flammable when exposed to air	1. Post fire guard until leaking phosphorus has been removed. 2. After removal of agents, post fire guard for 2 days for possible reignition. 3. Use putty knife to remove small amounts, then use blowtorch to burn off remainder.
Wear Breathing Apparatus	HC Smoke (G)	Smoke	1. Do not use water.
	Incendiary (G)	Burns with extremely high temperature	1. Do not use water. 2. Do not look at burning material.
	Napalm (J)	Mass fire	1. Fight fire as a POL fire.
Apply no Water	HC Smoke (G)	Smoke	1. Do not use water.
	Incendiary (G)	Burns with extremely high temperature	1. Do not use water. 2. Do not look at burning material.
	TEA Smoke (L)	Spontaneously flammable	

Chapter 4

STORAGE AND COMPATIBILITY STANDARDS

4-1. General Information. This chapter contains requirements for explosives storage facilities and locations and for storage of explosives. It also describes storage compatibility groups and the authorized combinations of these groups.

4-2. Basic Criteria. A segregated area must be set aside to store only explosives and related inert items, equipment, and supplies and to conduct explosives operations. The MAJCOM may authorize the use of empty munitions facilities for storing nonmunitions items to meet operational requirements. A deviation is not required. Explosives clear zones will not be reduced based on use of munitions facilities for storing nonmunitions items.

a. To be acceptable for storage, explosives must have an assigned hazard classification. This classification includes the Q-D hazard class/division and a storage compatibility group designation (TO 11A-1-47). Hazard classifications are published in TO 11A-1-46.

(1) Explosives items under development without an assigned hazard classification and scheduled for transportation or storage must be assigned an interim hazard classification as outlined in TO 11A-1-47.

(2) Items received without an assigned hazard classification may be held pending classification if they are segregated by type and stored alone.

b. Explosive items will not be stored with nonmunitions items, except as authorized in this regulation.

c. MAJCOMs may authorize the storage of firearms in explosives storage areas to meet operational commitments and under the following conditions, if other suitable storage facilities cannot be made available.

(1) Space is available without degrading storage conditions of explosives stocks.

(2) Firearms and explosives stocks will not be stored in a facility served by a common outer door unless they are controlled by the same agency.

(3) Firearms may be stored in individual cubicles of a multicubicle or segregated storage magazine or similar structure. Where several cubicles are required for firearms, they should be grouped together in a single building rather than spread among several buildings.

4-3. Requirements for Storage Locations. The following rules apply where explosives are stored:

a. Areas:

(1) Explosives locations will be sited as prescribed in chapter 8 and will comply with Q-D criteria in chapter 5.

(2) Good housekeeping will be practiced in all locations.

(3) Barricades, when used, will be constructed according to paragraph 5-13 and maintained in good repair.

(4) Access and internal roads and all explosives locations will have adequate drainage and be maintained in good repair.

b. Magazines and Spaces:

(1) Structures will be in good condition and suitable for the storage of explosives types and hazard class/divisions involved. The earth cover on igloos will be at least 24 inches thick and will be properly maintained to prevent erosion or fire hazards.

(2) Each storage space will have ventilation or other suitable means of air circulation or dehumidification. Steel arch, earth covered igloos may be built without roof ventilators (for integrity of the faraday cage lightning protection system); however, front wall ventilators are permitted.

(a) Where fusible links are required, they will be unpainted, serviceable, properly installed, and rated for 160°F (for example, NSN 4210-00-033-6032 or suitable substitute).

(b) Ventilators will be checked periodically to ensure they function properly. Ventilators may be closed where blowing snow or humid air would increase condensation. They may also be closed to protect supplies from blowing sand, if controls are set up to make sure heat does not build up within the storage space.

(3) Lightning protection systems will be installed and maintained except as provided in paragraph 6-16a. Copies of inspections, required in chapter 6, will be kept by the using unit according to AFR 12-50, table 91-1, rule 3.

(4) The interiors of all spaces will be clean and free of all prohibited articles and material.

c. Associated Equipment. Powered lift trucks, dunnage, empty boxes, excess packing material, or similar items will not be stored in a magazine or other space containing explosives.

d. Support Equipment for Contingencies. Noncombustible equipment required to support an approved contingency plan may be stored in explosives facilities for ready use.

e. Magazine Exits. Doors and locks will be kept in good working order. Magazines will be closed and locked at all times, except when being aired or when personnel are in the magazine. If security of the magazine or space is a consideration, a guard should be posted.

(1) Personnel working in magazines must have a clear path to the exit.

(2) If the magazine has more than one door, two or more doors will be unlocked and opened. This does not apply to doors equipped with panic hardware, which may remain closed. Doors may be closed in extreme weather conditions (for example, extreme cold or blowing snow or dust) or during advanced readiness conditions when attack is possible, provided the following conditions are met:

(a) Doors are locked open. That is, personnel outside cannot lock in those inside.

(b) Adequate lighting is available.

(c) Doors can be opened from the inside by a single individual.

(d) Internal combustion or other hazardous fume-producing equipment is not used.

f. Flammable Liquids. Flammable liquids must not be stored in magazines or other locations where explosives are present. This does not apply to liquids assembled as components of explosives items.

g. Inert Munitions. Inert munitions or munition components may be stored with explosives; however, training items must be physically separated from live items they represent.

4-4. Storage Magazines:

a. Temporary and Long-Term Arrangements:

(1) Earth-covered magazines (igloo or other subsurface) are preferred for the storage of all explosives. Other types of standard magazines which are built according to approved definitive drawings may also be used. Existing magazines of other descriptions (including contractors' facilities) providing the proper degree of protection and safety may be used when approved by the MAJCOM.

(2) Any magazine or warehouse-type building that gives protection from the weather and meets Q-D requirements may be used to store explosives hazard class/division 1.3 and 1.4 material.

(3) Indoor (magazine) storage is preferable for all types of explosives and is mandatory for bulk high explosives, solid propellants, and pyrotechnics. Priority for existing indoor storage should be given to items requiring the most protection from the weather (based on the method of packing).

(4) Outdoor storage may be used when approved by the MAJCOM except for those items identified in (3) above. If high density storage is needed in a restricted land area, the approved barricaded module is preferred (paragraph 5-22).

(5) AFRs 125-37 and 207-1 contain guidance for security of munitions. General information for munitions rewarehousing is in TO 11A-1-61-4.

(6) Priority for use of barricaded facilities should consider the fragmentation hazards of the munitions.

b. Temperature Control:

(1) A sudden change in temperature may damage airtight containers or may cause excessive condensation of moisture. If the temperature in a magazine exceeds 100°F for more than 24 hours, the magazine should be cooled by wetting the exterior of the building with water. As an alternate, open the doors and ventilators after sunset and close them before sunrise. When magazine doors are opened for airing, AFR 125-37 protection criteria will apply. If these steps do not lower the temperature, the materials should be moved to another magazine where the temperature is below 100°F.

(2) Besides the policy in (1) above, certain items which contain explosives have stringent temperature restrictions. The temperature range is given in the TO for the item. Precautions must be taken to ensure these limits are not exceeded.

c. Heating and Dehumidification. Storage magazines should not be provided with heat unless it is needed to prevent condensation of moisture or to keep a constant temperature.

(1) If heat is needed, it must come from a source which meets all safety standards for use in the environment involved and complies with the National Fire Codes (NFC).

(2) If mechanical dehumidifiers are installed, they must meet all environmental safe-

ty standards (Underwriters' Laboratories (UL) Bulletin 474, Dehumidifiers, and American National Standards Institute (ANSI) Safety Code B9.1, Mechanical Refrigeration).

(3) If dehumidifiers are installed at overseas locations, they must comply with the requirements above or those of the host nation, whichever is the most restrictive.

4-5. Explosives Stocks. Stocks of explosives normally will be stored in their approved, properly marked, storage or shipping containers. Outer containers will be in good condition and securely closed. Stocks of containers will be stable and arranged in magazines or other approved locations according to storage drawings or directives. If needed, assembled items may be stored with compatible items and components.

a. Ventilation of Stacks. Ventilation will be provided for all parts of the stack by use of dunnage.

b. Aisles. Aisles will be kept so that each stack may be inspected. When needed, block storage is allowed if stack ventilation is maintained.

c. Storage in Operating Buildings and Locations. Only the explosives needed to ensure a safe and efficient work flow will be present in an operating building when operations are being conducted. This does not preclude storage in an operating building when operations are not being conducted.

4-6. Damaged Containers and Unpackaged or Unserviceable Items:

a. Damaged Containers and Unpackaged Items. Loose explosives items, single inner packages (nonmetal), or explosives in damaged containers will not be stored in the same magazine or space with properly packed items. Until they are packaged properly or otherwise disposed of, they must be stored in a magazine or space set aside for temporary use. Nonstandard boxes of explosives may be stored with compatible and properly packed items. These boxes must be properly closed and clearly marked to show contents and quantity. Requirements of TO 11A-1-10 and the item TO apply.

b. Unserviceable Explosives Items:

(1) When dangerously unserviceable items cannot be destroyed immediately, place them in an isolated location separated from other facilities by intermagazine distance. Dangerously unserviceable items are those which have a substantially greater probability of inadvertent or unintentional activation than a normal item. Examples would be partially or fully armed fuses, exuding dynamite, or ruptured munitions with exposed explosives.

(2) Segregate other unserviceable items, including lots suspended from issue and use, from serviceable items. Put them in a separate facility or segregate them physically within the same facility. Normal lot-to-lot separation is not considered to be segregation.

(3) Mark each package or stack to show its exact status. The markings will be clear to prevent inadvertent issue and loss of information.

4-7. Operations Allowed in Storage Spaces Containing Explosives. The following operations are allowed in a storage magazine space if there is enough space to do them safely:

a. Palletizing, removing, and replacing shipping crates (boxes or protectors) on bombs.

b. Replacing unserviceable strapping on boxes.

c. Necessary testing or sampling specifically authorized for performance in the stored condition.

d. Opening an outer container for small issues, or opening a "lite" box (TO 11A-1-10) for inventory. Care must be taken in closing and resealing opened boxes.

e. Opening bolted or latched special storage containers housing self-contained weapons or missiles for authorized testing, sampling, or transfer to transport trailer or vehicle.

f. Minor repair, cleaning, painting, or restenciling of all-up-rounds (AUR) or containers. Solvents and paints used must not create a hazardous or explosive atmosphere within the storage space. See paragraph 6-15 for grounding requirements.

g. Inspecting munitions without unpackaging. Bomb and cluster bomb unit (CBU) fuse well plugs may be removed for inspection when they can be easily unscrewed as prescribed in the TO. However:

(1) If there is a binding of the plug or evidence of exposed explosives, bombs will be moved to an operating location before starting repairs.

(2) Threads and cavities may be cleaned and preservatives applied only if approved cleaning solvents are used. Plugs will be removed from the storage location for cleaning.

h. Maintaining and inspecting class/division 1.4 explosives. These explosives may be unpacked, inspected, reconditioned, and repacked if normal precautions are taken and if no other hazard class/division of explosives are present.

i. Assembling and disassembling explosives in storage locations:

(1) Explosives are normally assembled in a properly sited operating building, preload facility, or other designated separate facility or location. Empty storage locations or structures may also be used for assembly and disassembly if they meet the Q-D criteria for operating locations (table 5-1).

(2) Where it is essential to the mission and protective shelters are not readily available for munitions personnel, items shipped unassembled may be assembled in required quantities within an earth covered igloo without the igloo meeting the Q-D for operating locations. Munitions assembled within earth covered igloos may be temporarily placed in the area immediately in front of the igloo which is not included in the unbarricaded zone of adjacent igloos as depicted in figure 5-1. These assembly operations are authorized solely for providing protection to personnel who would otherwise be working in the open, and thus would be exposed to enemy attack. These assembly operations are subject to MAJCOM control and may be authorized only in support of increased readiness, combat conditions, or exercise or training scenarios simulating these conditions. Because of the increased exposure of personnel to explosives hazards, the MAJCOM will ensure corrective actions have been initiated to provide properly sited facilities for protecting personnel before approving use of these interim procedures. When conducting operations under the provisions of this paragraph, normal intermagazine separation distances required by chapter 5 must be maintained. Further, nothing in this paragraph should be interpreted as authority for siting new construction to be used for purposes outlined in this paragraph.

(3) Only those fuses authorized for prefusing by TO 11A-1-63 may be installed in the storage facility. Before moving prefused bombs, they must be inspected, where possible, to assure the fuses are in the proper safe configuration.

4-8. Container Repair. Except as allowed in paragraph 4-7, containers of explosives will not be repaired in magazines which contain other explosives. When maintenance and inspection facilities are not available, inspection and repair may be done in the open if the following distances are kept:

a. At least 100 feet or intermagazine distance, whichever is greater, from aboveground magazines and the unbarricaded door end of earth-covered magazines (igloos). This distance will be based on the quantity of explosives at the operation.

b. At least 50 feet or intermagazine distance, whichever is greater, from barricaded sides of earth-covered magazines (igloos). This distance will be based on the quantity of explosives at the operation.

4-9. Repairs to Explosives Facilities. Repairs to explosives facilities will not be made until munitions supervisory and safety personnel decide whether the contents must be removed. Repairs will not be made to the interior of a magazine that contains bulk explosives. Usually roofs, ventilators, lightning rods, doors, and other parts of, or appendages to, the exteriors of magazines which contain bulk explosives may be repaired without removing the explosives. Minor repairs may be made to the interior of facilities that contain finished and packaged explosives items, complete weapons, or protected components.

a. Requirements During Repair. When the facility is being repaired, additional safety precautions are necessary. For example:

(1) The floor in the immediate area of the repair will be kept clean and free of extraneous materials and equipment.

(2) Flame or heat-producing equipment will not be used inside a facility that contains explosives, unless the contents are protected from the flame, sparks, and heat by physical separation or shielding. Fire department personnel will be notified before the repair operation and will be present at the scene during the operation, if deemed necessary by the base fire chief. Also this equipment will not be used outside if it would expose the contents of the building to flame or sparks or other unfavorable conditions. Applicable requirements of AFOSH Standard 127-5 will be met.

(3) The facility will be inspected during and after completion of the work. If melting pots or other heat-producing devices are used, they must be kept at least 100 feet from the explosives location. When needed, baffles and

screens should be used to confine sparks and flames.

b. Prerepair Briefing. Personnel doing building or area maintenance will be briefed on the hazards involved and precautions needed to perform the work safely.

(1) If explosives remain in the facility and hazards warrant, trained explosives safety personnel will monitor repair activities for safety.

(2) The monitor will halt repair activities when, in his or her opinion, hazards are being created. The senior supervisor of the facility will resolve the problem before resuming operations.

4-10. Licensed Explosives Storage Locations. These are operational explosives locations normally located outside the explosives storage area, but within the US Air Force area of control.

a. Mission essential quantities of explosives and chemical items may be stored within nonexplosives operational buildings and locations. Each organization whose mission requires such storage will request a license from the host base explosives safety representative. The following facilities do not require a license:

(1) An explosives building or location sited and approved according to chapter 8, unless sited for a lesser class/division of explosives. For example, a location sited for class/division 1.3 and 1.4 may be licensed for class/division (04)1.2 explosives.

(2) A building within a sited explosives location. For example, a storage container or shed within a sited ready explosives facility.

(3) Sited and approved parking areas for explosives-loaded aircraft.

(4) Certain facilities exempted in paragraphs 4-11 and 4-12.

(5) IG team storage of explosives used in disaster preparedness exercises. The quantity limitations and safety requirements of b through d below apply. The storage location selected will be away from populated locations and the base weapons safety officer will approve the location. IG personnel may perform required inspections and designate smoking areas. Fragment barriers are not required if class/division (04)1.2 items are limited to M115-series ground burst simulators stored in nonmetal containers. Only the M9- or M17-series gas mask of the protective equipment specified in table 9-1 need be available if hexachloroethane (HC) smoke munitions are being stored.

b. Compliance with Q-D and compatibility criteria is not required for explosives in class/division 1.4 or class/division 6.1; up to 100 pounds net explosives weight (NEW) class/division 1.3; and up to 50 pounds NEW class/division (04) 1.2 (paragraph 4-12). When class/division (04) 1.2 is stored inside or at less than inhabited building distance (IBD) from inhabited buildings, fragment barriers will be provided. Minimum acceptable fragment barriers are: 1/4 inches of mild steel plate, one layer of sand bags, 12 inches of loose sand or dirt, or equivalent protection. Fragment barriers are not required for storage of class/division (04) 1.2 in or at less than IBD from related facilities, such as armories, where only those personnel who exclusively support the licensed storage facility work. Quantities in excess of these must comply with the Q-D requirements of chapter 5 and must be sited according to chapter 8.

c. Locations licensed for class/division (04) 1.2 material will be separated from each other and from locations containing class/division 1.3 material by a substantial dividing wall or 50 feet. Locations licensed for class/division 1.3 material will be separated from each other by a fire wall or 25 feet. Where these separations are not met, the total NEW for all locations may not exceed the limits in b above, and the combining rules of d(1)(e)*1* below apply.

d. Before granting the license, the installation weapons safety representative will:

(1) Physically inspect the proposed facility for compliance with the following: (See paragraph 4-12 for additional requirements that apply to specific facilities.)

(a) It must be possible to lock and secure the structure or room used for storage to prevent pilferage and unauthorized handling. Each item must be stored in an approved shipping container which is closed and in good repair, unless the item needs to be kept in a greater state of readiness.

(b) The stocks must be protected from moisture and high temperatures. The area should be free of steam pipes, stoves, and other heat-producing equipment, or the stocks must be as far away from such equipment as possible.

1. Storage facilities exposed to the direct rays of the sun must be ventilated to allow for a free flow of air. Stacks must be ventilated by using dunnage between layers when the

items are stored in their normal outer packing containers.

2. Each skylight or window near the explosives items must be shaded to prevent exposure to direct sunlight.

(c) In locations where handling explosives is not the primary job of the function, it is important to observe all fire and explosives safety rules. In these locations, fire extinguishers proper for the hazard must be readily available. The base fire chief will determine the type and quantity of fire extinguishers required, extinguisher placement at the licensed location, and whether additional fire prevention practices are required. Fire and chemical hazard symbols must be displayed near the entrance to the inner room which contains the explosive material.

(d) Smoking may be allowed in the room if:

1. The room cannot be reserved exclusively for storage of explosives.

2. The stocks are kept in properly marked, closed metal boxes or lockers.

3. The fire chief has granted written permission to do so.

(e) If the location requires combined storage of explosives in class/division 1.3 and class/division (04) 1.2, these rules must be followed:

1. The combined quantity of these two class/divisions will be not greater than 100 pounds NEW. When combining the two divisions, class/division (04) 1.2 material will not exceed 50 pounds NEW.

2. The total quantity in storage must never exceed the level authorized by the license.

3. Replacement stocks will be stored in the base explosives storage area or a separate sited facility.

(2) Validate the license request and the quantity of explosives to be kept, ensuring that only the smallest quantities needed to support requirements are authorized. License must clearly state the location and explosives quantities authorized.

(3) Coordinate with the base fire chief and security police to decide whether to approve such a request. The fire chief will enter the specific type, quantity, and physical placement of fire extinguishers on the proposed AF Form 2047, Explosives Facility License, in the Remarks section. After coordination, the installation weapons safety representative may approve and issue the license. (See attachment 3 for instructions on how to complete AF Form 2047.)

e. Licenses will be renewed each time a type or quantity of explosives or munitions changes. As a minimum, review each license annually for continued requirement and applicability. Licenses should be revoked when the requirement no longer exists.

f. A copy of the approved license will be clearly displayed at each storage location.

g. The weapons safety office will keep copies of all approved licenses for the installation, maintain surveillance over licensed locations, and exercise cancellation authority when conditions warrant such action. When a tenant's request cannot be resolved, handle the matter in the same way as tenant waiver requests (paragraph 11-8).

4-11. Exceptions for Storage of Small Arms Ammunition. Paragraph 4-10 does not apply to the storage of small arms ammunition (.50 caliber or less), commercial maritime distress signals, and like items held by base exchanges and individuals in family housing. However, if the base exchange stores primers and smokeless powder, a license is required and the limitations of paragraph 4-12h apply. This exception also applies to locations storing less than 1000 rounds of class/division 1.4 small arms ammunition or cartridges for cartridge actuated tools, or for locations storing thermal batteries. Storage or reloading of ammunition or flares in dormitories or bachelor officer quarters is prohibited. Base commanders or MAJCOMs may set up controls as deemed necessary in the above cases.

4-12. Safety Requirements for Certain Facilities and Munitions:

a. Control Tower. Necessary quantities of hazard class/division 1.3 pyrotechnics needed to conduct emergency operations may be kept in fixed and mobile control towers on the following basis:

(1) Pyrotechnic projectors and pistols will not be loaded unless the operational situation demands such a state of immediate readiness. (The same safety requirements that apply to firearms apply here.)

(2) Projectors and pistols must be given the same security as small arms weapons. They should be placed in a proper rack, locker, box, or compartment to prevent damage, unauthorized handling, theft, or accidental discharge.

b. Survival/Rescue Equipment. A license is not required for assembled parachutes, survival and rescue kits, life rafts, and life preservers containing authorized explosives when kept in personnel equipment rooms or life raft, survival equipment, and life support shops. A license is required for areas where explosives items are removed and replaced in kits, or when spares are stored.

c. Riot Control Items. Riot control and smoke grenades (except white phosphorus (WP) grenades) may be stored with small arms ammunition in arms rooms and other such locations. However, if the arms room is collocated with a facility where personnel are under physical restraint or confinement, the National Fire Codes, Standard 101, Life Safety Code, applies, and no amount of 40 millimeter (mm) grenades, pyrotechnics, tear gas, or chemical irritant may be stored in the room regardless of the Q-D class/division or compatibility, unless protective features are designed into the arms room which completely protect detainees from the effects of accidental munitions activation. Protective features include fragment barriers, blast doors, and exhaust fans. Capabilities of protective features must be evaluated by qualified engineers.

(1) The quantity should be limited to the smallest amount needed to support approved contingency plans.

(2) Protective mask and suitable gloves will be readily available for use in removing these items safely in the event of a fire or functioning.

d. Egress Systems Maintenance Shops. A limited quantity of in-use egress explosive components of any class/division (including c/d 1.1) may be held in egress shop storage when these items are removed from aircraft undergoing maintenance. The quantity will not exceed the total number of complete sets for the number of aircraft in maintenance. The following special provisions apply:

(1) The NEW limitations imposed by paragraph 4-10 do not apply for those components installed in egress seats not being worked.

(2) Egress explosive items will be stored in a secure space used only for explosives storage. Storage of uninstalled components must meet the NEW limitations of paragraph 4-10.

(3) Within the egress maintenance work area, the NEW limitations in paragraph 4-10 apply to the number of seats and spare components undergoing maintenance at any one time.

(4) Unserviceable items will be turned in to the base storage activity as soon as possible.

e. Remotely Piloted Vehicles (RPV), Drones, Air Launched Cruise Missiles (ALCM), and Ground Launched Cruise Missiles (GLCM):

(1) Maintenance may be done on RPVs and drones in maintenance hangars with the recovery system explosive components installed if:

(a) The circuits for the explosive components are made safe.

(b) No maintenance involving the recovery system safing circuits is done.

(2) Explosive components of recovery systems may be removed and reinstalled within the maintenance hangar. These class/division 1.1 and 1.2 components may be held in a licensed location within the maintenance facility. The number of explosive components removed from RPVs and drones needed to maintain an orderly work flow will be determined by the base explosives safety representative and included on the license (paragraph 4-10).

(3) No limit is set on the number of RPVs and drones with explosive items installed allowed in a maintenance hangar.

(4) ALCMs and GLCMs without warheads and booster motors may be handled, stored, and maintained as authorized in (1), (2), and (3) above. When fueled, they may be stored at class/division 1.4 intermagazine distance from explosives.

f. Gun Systems Maintenance Shops. All operations will be carefully planned and controlled. When possible, ammunition will be removed from guns and gun systems before they are brought into a weapons maintenance facility for repair. However:

(1) Ammunition need not be removed from gun systems using drums if the feed system can be mechanically isolated so that ammunition cannot enter the gun.

(2) Q-D requirements do not apply to class/division 1.4 explosives or to less than 50 pounds NEW of class/division (04) 1.2 explosives if:

(a) Safety precautions are taken to prevent inadvertent firing. This must include grounding of gun systems which contain live ammunition. Weapons must be pointed in the least hazards direction to reduce the risk of inadvertent firing.

(b) All ammunition removed from gun systems is removed from the building as soon as possible.

(c) Explosives-loaded gun systems are not brought into the maintenance facility until needed to meet the work scheduled and are removed at once after they are repaired.

(d) Licensing and general rules about the presence of explosives in any given location are followed.

g. Incendiary Equipment and Document Destroyers. These items may be kept near the planned point of use to comply with emergency destruction plans. Quantities will be established for each location through coordination of the using agency and base explosives safety representative. The 100-pound class/division 1.3 limit does not apply in this case, but the quantity will be limited to the minimum required. Storage rooms should be constructed of, or protected by, noncombustible or fire-resistive material.

(1) All requirements of paragraph 4-10 apply except of NEW limitations as noted above.

(2) Storage in nearby small low-cost structures (sheds, conex, etc.) is preferred over storage at the point of use. The structures should have a 50-foot firebreak or vegetation control zone around it and be at least 75 feet from any other building.

(3) Replacement stocks will be stored in the base explosives storage area.

h. Rod and Gun Clubs. Each club that handloads ammunitions on Air Force property must be licensed as an explosives location. A qualified member will be designated to make sure criteria are set up and enforced.

(1) Retail Stores. Where only retail sales are made, paragraph 4-10 will apply, except that a license is not required unless primers and smokeless powder are to be sold.

(a) Compliance with Q-D standards will not be required for reasonable quantities of small arms ammunition, 100 pounds of propellant, and 25,000 primers packed in their shipping containers.

(b) Class/division 1.3 propellant will not be placed in other containers, if it would result in extreme confinement in the event of ignition.

(c) When complying with (a) and (b) above, an exception to Q-D and fire symbol requirements for class/division 1.1 primers will apply. Fire symbols 3 may be used to designate the presence of the propellant and primers. The symbol need not be changed during temporary periods when the propellant has been sold out, but primers are still in stock.

(2) Handloading. Handloading operations will be done in a room or building used solely for this purpose. The safety requirements outlined above for a retail store apply, as well as the following:

(a) A local written procedure will be developed, approved, and posted. Security will be according to AFR 125-37.

(b) Only authorized personnel, trained in the use of handloading equipment, safety provisions, and hazards involved, will be allowed loading privileges. During loading operations, all will wear safety goggles or face shields. Personnel in training must be under strict supervision.

(c) A log will be kept which shows the names of the certifying instructor and each person who has satisfactorily completed the training.

(d) Smoking, matches, or flame-producing devices will not be allowed in any loading or storage location.

(e) A ground bar with a resistance of 25 ohms or less will be placed at each entrance to the handloading room. A sign will be clearly posted to require each person to touch the bar before entering the room. The ground bar will be maintained and inspected as outlined in chapter 6.

(f) Explosives and personnel limits will be posted, No more than 10 pounds of propellants, 10,000 primers, and 5,000 assembled rounds will be allowed in the handloading room at one time. (These quantities are considered as part of the overall limits for the building.)

(g) Storage lockers will be provided for the explosives. Only quantities required to sustain a continuous operation will be transferred to the loading point. Only one packing tray at a time will be removed from primer storage. Unused components will be repacked in their original containers and returned to the storage locker at the end of each loading operation. Lockers will be locked when not in use.

(h) Tables used for handloading must be covered with nonporous, nonsparking conductive material.

(i) Handloading equipment and conductive work table tops will be electrically grounded through a resistance of 25 ohms or less. The grounding system will be tested twice a year and when connectors are broken. Test results will be documented. Connectors will be visually inspected before each day's operation.

(j) Floors and walls must be free of cracks that could accumulate explosive dust and foreign materials. Good housekeeping practices will be observed at all times.

(k) In case of a spill, all operations will stop until the explosives are cleaned up. Put all salvaged propellant in a metal container that contains water and is marked "Scrap Explosives." Put all damaged components or complete rounds in separate, properly marked containers. Separate unserviceable items from serviceable stocks. Salvaged propellants, damaged rounds, or components, and empty explosives containers will be disposed of by qualified personnel as directed in TOs 11A-1-42 and 11A-1-60.

(l) Handloading equipment will be permanently attached to the work table and electrically bonded to the table top.

(m) Only commercial-type loading tools, dies, scales, powder measures, and so forth will be used during handloading operations.

(n) Operational shields will be placed between each piece of handloading equipment mounted on a work table.

(o) Bullet molding will be done outside the handloading room.

i. Morale, Welfare, and Recreation (MWR) Activities. MWR activities such as aero clubs and boating activities may be required to maintain and store commercial pyrotechnic signals. These items should be controlled and stored using the same criteria as the military item which they resemble. Paragraph 4-10 applies, and storage locations must be licensed and personnel given proper training. TOs or manufacturer's data may be used to develop local written procedures.

j. Minuteman Handling Team (MHT) Facility. The transporter erector (TE) tractor or autocar with missile in tow may require temporary storage in the MHT facility. This procedure is authorized when the following conditions are met:

(1) Temporary storage is essential to meet operating requirements.

(2) The vehicle must be chocked and grounded.

(3) A complete vehicle safety inspection is performed to ensure that no fuel leaks, hydraulic leaks, and other safety deficiencies exist.

k. Flightline Ready Explosives Areas (Holding Areas). These areas will be identified by a physical boundary (such as, rope and stanchions), and signs will be posted to keep unauthorized personnel out of the area, and to prohibit smoking within 50 feet. Explosives limits will be posted to assure authorizations are not exceeded. Fire extinguishers will be located at the area and fire symbols will be posted. Where permanent shelter is provided for personnel operating these areas, missiles in the area should be positioned so the shelter is out of radial alignment with the warheads. Munitions will be secured as specified in AFR 125-37 or removed from the area when the area is not monitored. Normal Q-D outlined in chapter 5 will apply except for those licensed holding areas meeting the NEW limits of paragraph 4-10b.

4-13. Base Defense Support Munitions for Dispersed Locations. When required for defense against hostile forces, base defense support explosives stocks may be prepositioned in temporary magazines. When licensed facilities and stocks are located, stored, and protected as stated below, they are exempt from waiver and deviation requirements.

a. Ventilation must be provided for all items stored.

b. If needed to avoid attention of hostile forces, fire and hazard symbols may be omitted. However, "no smoking" signs will be posted. The fire department will be kept informed of each facility's location and type of explosives stored in it.

c. If the facility is stocked with class/division 1.3 and 1.4 and riot control items, follow the instructions above (paragraphs 4-10 and 4-12).

d. If the facility is stocked with class/division 1.1 and categories (04), (08), (12), and (18) class/division 1.2 items:

(1) The maximum limit per magazine will be 100 pounds NEW. If more than 100 pounds is required at that location, use additional portable magazines. (If the facility meets this weight limit, site plans described in chapter 8 are not required.)

(2) If two or more magazines are required in the same location, they will be separated by the proper aboveground magazine distance. As an alternate, they will be placed side-by-side or back-to-back with 4 feet of earth fill or sandbags between the magazines.

(3) If explosive items are fragment-producing, barricades should be used to the maximum around the magazines.

(4) If it is not possible to comply with Q-D criteria in siting these facilities, each side of any facility that violates Q-D criteria should be

barricaded with a barricade at least 4 feet thick. This should be made of sandbags or other comparable retainers placed against the wall. Place door end barricades as close as personnel access clearance will allow. Cover top with at least 14 inches of earth, two layers of sandbags, or other suitable retainers.

4-14. Storage of Toxic Chemical Ammunition, Agents, and Other Toxic Substances:

a. Toxic Chemical Ammunition and Agents. All compatibility Group K ammunition and agents (nerve, blister, and psychological) may be stored in the same storage area since many of the storage and safety requirements are the same. Some Group K items can not be mixed in the same storage facility with different items in Group K as specified in table 4-1, note 4. They must be stored in igloos (or underground structures of comparable or greater strength), with concrete floors treated with sodium silicate to prevent agent absorption. (In special cases, floors may be stainless steel, if all seams are welded. In laboratories or munitions preparation areas, absorbent tile can be used over concrete or stainless steel surfaces, if the tiles can be easily removed and destroyed as part of the decontamination procedures.)

(1) Storage facilities should be located in a separate area or section of the explosives storage area.

(2) Normally, because of the reduced explosive material in these munitions, the quantity that may be stored is limited only by the physical capacity of the building.

(3) To detect leaks or other abnormal conditions, the stored munitions and storage facility will be inspected at least once a month.

(4) The stored items will be arranged so that any damaged or leaking container can be easily seen and removed.

(5) Field telephones, radios, agent alarms, or other means of communication will be maintained so responsible personnel can be notified in an emergency.

(6) Detection equipment, medical supplies, and decontamination equipment and solutions will be immediately available.

(7) Change houses and showering facilities, either stationary or mobile, will be provided at the storage area. Eating, drinking, and smoking will be confined to designated safe areas.

(8) Wind direction indicators will be used so that the upwind direction is obvious in the event of an emergency evacuation. If possible, conduct operations downwind of personnel and critical facilities.

(9) Safety training will be conducted periodically for all personnel involved in any operation. Make sure all personnel know the toxic symptoms of the agents and how to use protective, detection, and decontamination equipment.

b. Storage of Other Toxic Substances. Riot control, smoke, spontaneously flammable, and incendiary items may be stored in any approved explosives storage facility. However, they must comply with storage compatibility requirements of this chapter and Q-D requirements of chapter 5.

4-15. Rockets and Like Items. For safety during all logistical phases, keep in mind the propulsive characteristics of explosive items (rockets, rocket motors, assist takeoff units, and missiles). If in doubt whether an item or configuration (state of assembly) is propulsive or not, treat it as propulsive until technical information is available. Because of the number of types, sizes, and conditions of assembly encountered, only general safety guidance is given in this regulation. Every effort should be made to prevent or safely interrupt flight in the event of inadvertent ignition during any operation involving these items.

a. Restraint and Containment Devices. Restraint or containment devices may be prescribed by applicable TOs during electrical test and checkout operations to prevent flight of propulsive items. Restraint or containment devices are required where the failure of a single component of the testing or munitions system could cause activation of the munitions item. (For example, if a voltage limiter in a test set allowed excessive voltage to be applied to a rocket igniter circuit containing no other device, that would prevent ignition.) When multiple safety devices exist to prevent initiation, the responsible engineering authority (air logistics center (ALC) or system program office (SPO)) and responsible MAJCOM weapons safety office must decide if electrical tests can be safely conducted without restraint or containment devices. If a specific restraint or containment device is not required, consider the use of barricades at the operational site or outside the facility and position the items in the direction presenting the least hazard to personnel and property.

b. General Storage Arrangements. Items that could be self-propelled will have priority for storage in facilities with the greatest protection from the results of inadvertent ignition. The nose-down position is preferred because it offers the most protection. If this is not feasible, the items should be stored as follows:

(1) In an igloo magazine, point the items to the maximum extent possible toward, or against, any wall, including the head-wall of the igloo. Items will not be pointed toward the door or toward wall ventilators.

(2) In an aboveground magazine, point the items toward, or against, any substantial restraining wall or barricade. If there is no restraining construction, position the items in such a way as to present the least hazards.

(3) To the maximum extent possible, do not orient these items toward other explosive items.

c. Climatic (Temperature) Control. Rockets and like items should be stored in cool, dry magazines, and never in the direct rays of the sun. An environment as near "optimum" as possible for the item offers the safest storage. The upper and lower temperature limits stated for the item should not be exceeded. Prolonged exposure of the propellants of these items to either high or low temperatures may increase the normal rate of deterioration and it may make them more susceptible to initiation or damage during handling. This damage might cause uneven burning, dangerously high internal pressure, or explosions during use.

4-16. Cellular Magazines and Substantial Dividing Walls:

a. Multicubicle Magazines. Multicubicle magazines, AF DEF Drawings AD 33-13-19 (SAC-type) and AD 33-13-20 (ADC-type), are considered aboveground magazines for Q-D purposes. They are not considered barricaded unless barricades are provided.

(1) Because tests show that dividing walls of these magazines offer only limited protection, they are not recommended for construction. They may be approved for construction if the siting request clearly shows there is unusual and special need for them. However, the continued use of existing structures is authorized.

(a) Segregated storage magazines, AF DEF Drawing AD 33-03-18, and revisions, must be treated the same way as the multicubicle for storage and Q-D purposes. This also applies to similar structures built with substantial dividing walls of reinforced concrete equal to one of the multicubicle magazines cited above.

(b) Multicubicle and segregated bay magazines built with other than the standard substantial dividing walls are considered without separation for Q-D purposes. The Q-D calculations will be based on the entire contents.

(2) The substantial dividing walls of these buildings should reduce the possibility of simultaneous detonation in adjacent cells if the explosives limit of each bay does not exceed the 425 pound NEW of mass-detonating explosives and explosives are kept at least 3 feet from the dividing wall. The Q-D requirements will be based on the quantity of explosives in the individual cells. If the 425 pound NEW limit must be exceeded in any one bay, compatibility must be complied with between all bays, then Q-D will be based on one of the following:

(a) (AD 33-13-20) If the cells exceeding 425 pounds NEW of mass detonating explosives are all on one side of the 3-foot dividing wall, total the explosives weight of all cells on that side and compute Q-D requirements based on this total. If the 425 pound limit is exceeded on both sides, total both sides separately and use the larger of the two quantities.

(b) (AD 33-13-19) This building has an 18 inch center dividing wall; therefore, total the explosives content for the entire building for Q-D purposes.

(3) For storage of non-mass detonating explosives in a cell, the 425 pound limit does not apply. However, all classes are to be added according to paragraph 5-8 when the 425 pound mass-detonating explosives limit is exceeded in one bay.

(4) Cell dividing walls may not (depending on types and quantities of explosives involved) prevent propagating explosions from occurring.

(5) Rockets and missiles should be stored with nose ends toward the center (back) dividing wall.

b. Steel Arch Earth-Covered Igloos. Multiple steel arch igloos in a common earth cover (AF DEF AD 33-15-67, -68, -69, and -70) are considered barricaded except from the door end. Such buildings, when built according to pertinent cell loading or separation formulas, offer protection against both simultaneous detonations and propagating explosions.

4-17. Compatibility of Ammunition and Explosive Items. Ammunition and explosive items are assigned to compatibility groups for

:torage and transportation at and between DOD ıcilities. Ideally, each type item or division hould be separated, but this is generally not easible. Therefore, a proper balance of safety ınd other factors may require a combination of arious types of ammunition and explosives in torage and transportation.

a. If different types of ammunition and ex-ılosives, by item and division, are compatible, hey may be kept together. In developing the arious compatibility groups, these factors are onsidered:

(1) Chemical and physical properties.

(2) Design characteristics.

(3) Inner and outer packaging configura-ions.

(4) Q-D class/divisions.

(5) NEW.

(6) Rate of deterioration.

(7) Sensitivity to initiation.

(8) Effects of deflagration, explosion, or etonation.

b. Compatibility groups for certain ammuni-.on and explosive items, components, and as-embled weapons are given in TO 11A-1-46.

c. When intransit explosives shipments are :ored temporarily, the criteria in Title 49, Code f Federal Regulations (CFR) ; AFR 71-4; or ta-le 4-1 may be used. Do not store other danger-ıs articles with these explosives.

(1) Transportation compatibility criteria ı Title 49, CFR ; AFR 71-4; or table 4-1 may be sed for shipments of DOD explosives in DOD ehicles operated by DOD personnel. Commer-al shipments must comply with Title 49, CFR. :andard Air Munitions Packages (STAMP) ıd similar packages may be stored and trans-ırted by either criteria.

(2) This does not prohibit developing new ems in an increased state of assembly or ship-ng an assembled version of existing items. ıipment of assembled items on trailers or in ecial containers will require a safety analysis ıd approval by the Nonnuclear Munitions fety Board. Hazard classification actions will processed according to the procedures in TO A-1-4.

d. Compatibility during maintenance oper-ions is desirable, but not mandatory.

18. **Compatibility Groups.** Ammunition d explosives are assigned to one of twelve npatibility groups (A through H, J, K, L, and These groups have the following characteris-s:

a. Group A--Initiating Explosives. These are bulk explosives with the necessary sensitivity to heat, friction, or percussion that makes them suitable as initiating elements in an explosives train. Examples: Wet lead azide, wet lead styphnate, wet mercury fulminate, wet tetracene, dry RDX, and dry PETN.

b. Group B--Detonators and Similar Initiating Devices. These are items which contain initiating explosives that are designed to start or continue the functioning of an explosives train. Examples: Detonators, blasting caps, small arms primers, and detonating fuses without two or more safety features.

c. Group C--Bulk Propellants, Propelling Charges, and Devices Containing Propellant, With or Without Their Means of Ignition. These are items that will deflagrate, explode, or detonate upon initiation. Liquid propellants are not included. Examples: Single, double, and triple base and composite propellants, rocket motors (solid propellant, and ammunition with inert projectiles).

d. Group D--Black Powder, High Explosives (HE), Ammunition Containing HE Without Its Own Means of Initiation and Without Propelling Charge, and Fuses With Two or More Safety Features. These are ammunition and explosive items that can be expected to explode or detonate when any given item or any of its components are initiated. Examples: Bulk TNT, Comp B, black powder, wet RDX or PETN, bombs, projectiles, and CBUs.

e. Group E--Ammunition Containing HE Without Its Own Means of Initiation and With Propelling Charge (Other Than One Containing a Flammable or Hypergolic Liquid). Examples: Artillery ammunition, rockets, and guided missiles.

f. Group F--Ammunition Containing HE With Its Own Means of Initiation and With a Propelling Charge (Other Than One Containing a Flammable or Hypergolic Liquid) or Without Propelling Charges.

NOTE: As used in groups D, E, and F, "with its own means of initiation" indicates that the ammunition has its normal initiating device assembled to it, and this device is considered to present a significant risk. However, the term does not apply when the initiating device is packaged so there is no risk of detonating the ammunition if the device functions accidentally. It also does not apply when fused end items are configured and packaged so that they cannot be armed.

(1) Initiating devices may be assembled to the ammunition when their safety features preclude initiation or detonation of the end item if the initiating device functions accidentally. In this case, the items are considered to be "without its own means of initiation." For example, hand grenades are considered "with their own means of initiation" because the fuse has no out-of-line component. It will detonate the grenade if the fuse is initiated.

(2) Conversely, 20 millimeter (mm) high explosive incendiary (HEI) ammunition is considered to be "without its means of initiation" because the fuse, if initiated, will not detonate the projectile because of the out-of-line rotor.

g. Group G--Fireworks, Illuminating, Incendiary, Smoke (Including HC), or Tear-Producing Munitions Other Than Those Munitions That Are Water-Activated, or Which Contain WP, or Flammable Liquid or Gel. These are ammunition items which upon functioning, cause an incendiary, illumination, lachrymation (tear gas), smoke, or sound effect. Examples: Flares, signals, incendiary or illuminating ammunition, smoke, or tear-producing devices.

h. Group H--Ammunition Containing Both Explosives and WP or Other Pyrophoric Material. These are ammunition items which contain fillers that are spontaneously flammable when exposed to the atmosphere. Examples: WP, plasticized white phosphorus (PWP), and other ammunition containing pyrophoric material.

i. Group J--Ammunition Containing Both Explosives and Flammable Liquids or Gels. These are ammunition items which contain flammable liquids or gels other than those which are spontaneously flammable when exposed to water or the atmosphere. Napalm-filled fire bombs, with or without explosive components, are included in this group.

j. Group K--Ammunition Containing Both Explosives and Toxic Chemical Agents. These are ammunition items which contain chemicals specifically designed for incapacitating effects more severe than lachrymation. See restrictions in table 4-1, note 4.

k. Group L--Ammunition Not Included in Other Compatibility Groups. These are ammunition items that cannot be commingled with any other type of ammunition or explosives, or dissimilar ammunition of this same group. Examples: Water-activated devices, prepackaged hypergolic liquid-fueled rocket engines, fuel-air-explosives (FAE) devices, and pyrophorics such as TEA (triethylaluminum) or TPA (thickened triethylaluminum). This group also includes damaged or suspect ammunition or explosives of any other group. (Types presenting similar hazards may be mixed together but not with other groups.)

l. Group S--Ammunition Presenting No Significant Hazard. These are ammunition items packaged or designed to confine hazardous effects arising from accidental functioning within the package, unless the package has been degraded by fire. In this case, all blast or fragmentation effects are limited so they do not significantly hinder firefighting. Examples: Thermal batteries, explosive switches or valves, and other ammunition items packaged to meet the criteria of the compatibility group.

4-19. Mixed Compatibility. Compatibility groups may be combined in storage, maintenance, and transportation as shown in table 4-1. Paragraph 7-9 also contains transportation compatibility requirements.

4-20. Exceptions to Compatibility. Table 4-1 does not apply to maintenance operations which require the assembly or disassembly of incompatible components or during the transportation of munitions to or from combat aircraft loading areas (including temporary storage in flightline holding areas).

4-21. Prepositioned Demolition Explosives for Emergency Destruction Purposes Involving War Reserve Material. These materials may be prepositioned in storage spaces in minimum quantities needed for emergency destruction based on a and b below. "Prepositioned" means located within the confines of the same storage facility containing the munitions designated for emergency destruction. It does not mean placed upon the items to be destroyed, unless ordered in an emergency.

a. Detonators, blasting caps, and other firing devices may be stored in the magazine with prepositioned demolition material. They must be separated as far as possible from all other explosives and be barricaded with sandbags.

b. Prepositioned shaped charges must be pointed toward exterior walls or the floor.

4-22. Shaped Charges. Shaped charges focus blast effect into a directional jet, resulting in far greater penetrating ability than an equivalent size unfocused charge. Because of this di-

rectional effect, special storage considerations apply.

a. When packaging and storage criteria allow, shaped charges will be pointed toward the floor. When this is not possible, shaped charges should be pointed towards an exterior wall. In an earth covered igloo, shaped charges which face walls should face the side or rear walls.

b. Shaped charges should not be pointed at any wall when explosives are stored on the opposite side of that wall, such as in a multicubicle magazine.

Table 4-1. Mixing Compatibility Groups.

	A	B	C	D	E	F	G	H	J	K	L	S
A	X	Z										
B	Z	X	Z	Z	Z	Z	Z					X
C		Z	X	X	X	Z	Z					X
D		Z	X	X	X	Z	Z					X
E		Z	X	X	X	Z	Z					X
F		Z	Z	Z	Z	X	Z					X
G		Z	Z	Z	Z	Z	X					X
H								X				X
J									X			X
K										Note 4		
L												
S		X	X	X	X	X	X	X	X			X

NOTES:

1. "X" at an intersection means that those groups may be combined. Otherwise, mixing is prohibited or restricted.

2. "Z" at an intersection means that limited quantities of mission essential items maybe mixed. This mixing is approved only when operational considerations or lack of magazine space warrant it, and when safety is not sacrificed. However, these items must be kept packaged according to DOT shipping container specifications of Transportation Packaging Orders, or equivalent. Also, these containers may not be opened in the magazine for any reason, including actions specified under paragraph 4-7. Examples of acceptable combinations of class 1 are:

a. Division 1, group A, initiating explosives with division 1, group B, fuses not containing two or more independent safety features.

b. Group C rocket motors, with group E complete rocket systems having the same rocket motors.

c. Ammunition items without explosives which contain substances belonging to another hazard class may be assigned to the same compatibility group of items containing explosives and the same substance. Both items may be stored together.

Table 4-1. Continued.

3. Equal numbers of separately packaged components of complete rounds of any single type of ammunition (for example, missiles, GP bombs) may be stored and transported together. They may also by be stored or transported with assembled rounds made up from these components. When so stored or transported, the compatibility will be that of the assembled round. That is, group H for WP rounds; group D, E, or F, as appropriate, for HE rounds. (The "equal number" provision is intended to limit the material stored to enough packaged components to make up the desired number of complete rounds. It is not necessary to unpack extra components from normal packaging to make an "equal numbers" condition.) All assembled end items in a storage location must belong to the same compatibility group.
4. Group K items cannot be mixed with other groups. Also, some group K items cannot be mixed with different items within the same group K. HQ AFISC/SEWV will determine which items under group K may be mixed with other items and which must be kept separate when such a requirement develops.
5. Ammunition designated "Practice" or "Target Practice" by National Stock Number and nomenclature may be combined with the fully loaded ammunition that it simulates (for example, 2. 75-inch target practice (TP) rockets with WP rockets).
6. Small quantities (not to exceed 1,000 pounds total NEW) of compatibility groups B through J and S may be stored and transported together. The NEW of 1.4S items need not be included.
7. See paragraph 7-9 for information on compatibility of explosives during transportation.
8. For purpose of mixing, all items must be packaged in approved storage containers. Items will not be unpacked at storage locations except as authorized in paragraph 4-7i.
9. Articles of compatibility groups B and F will each be segregated in storage from articles of other compatibility groups by means which are effective in preventing propagation to those articles.

Chapter 5

PRINCIPLES AND APPLICATION OF EXPLOSIVES QUANTITY-DISTANCE CRITERIA AND RELATED STANDARDS

Section A—Principles of Explosives Quantity-Distance (Q-D) Criteria

5-1. General Information. This chapter outlines general explosives quantity-distance (Q-D) criteria and related standards for storing and handling explosives. It defines the hazard classification system and describes the expected damage and limits of protection given by these criteria under varying circumstances. Testing has been accomplished on several systems and specific storage configurations which have demonstrated that the general criteria of this chapter do not apply. Chapter 12 covers these special items and situations.

a. The Q-D criteria and tables prescribe acceptable minimum separation distances for storing and handling explosives. They also state maximum quantities of the various class/divisions of explosives allowed in any one location. Explosives limits set up locally will be no greater than needed for a safe and efficient operation. Operations and personnel will be located to minimize exposure to hazards.

b. Where explosions are to be deliberately initiated, a greater degree of protection is normally needed. This may include maximum possible confinement of the explosion at the source, barricades next to the explosives or exposed sites, greater separation distances, etc. This could also require "operational shielding" for personnel involved or evacuation of unprotected personnel from the area. TO 11A-1-42 and TOs for specific munitions provide guidance.

c. Commanders must give careful attention to the exposure of essential resources located at less than inhabited building (IB) or public traffic route (PTR) distances from explosives hazards. For example, intermagazine distances, although acceptable for separating explosives from explosives on adjacent loaded aircraft, may not protect such aircraft from destruction in the event of an accidental explosion. (See section E for a full discussion of damage expectancy and risk assessment.)

d. Hazards or risk associated with explosive operations can be reduced or eliminated by controlling the hazard, such as discontinuing an operation or evacuating a facility. When the hazard can be eliminated, no violation to Q-D criteria is considered to exist; however, the operation and required management actions must be specifically addressed in local operating instructions or regulations.

e. Where distances are specified, protection provided by hardening exposed sites may be used to reduce distances, provided equivalent protection is provided.

f. When a minimum fragment distance is specified, this distance may be reduced if adequate protection can be provided from both high and low angle fragments. The required overpressure protection must be provided.

5-2. Separation of Explosives Locations. Separation is needed to minimize explosives hazards. Locations which contain explosives will be separated from:

a. Other locations which contain explosives and propellants.

b. Inhabited buildings. This includes structures or other places not directly related to explosives operations where people usually assemble or work.

c. Public traffic routes.

d. Aircraft parking and storage areas, runways and approach zones, and taxiways.

e. Operating lines or buildings. This includes structures or other places where people usually assemble or work that are directly related to explosives operations.

f. Petroleum, oil, and lubricant (POL) storage.

g. Utilities, buildings, and facilities.

5-3. Types of Separations:

a. Inhabited Building (IB) Distance. IB distance is the minimum allowable between an IB and an explosives location. This distance must be provided between explosives locations and base boundaries or to the perimeter of any existing "local restrictive easement estate" or agreement. See paragraph 11-1 for information on restrictive easements or agreements. IB distance does not apply if the base or restrictive easement boundary is adjacent to land that is open and both unsuitable for habitation and unsuitable for public gatherings. In this case, a quarterly review of the area to ensure it remains open, uninhabited, and unused must be per-

formed. If any building, habitation, or recreational activity is initiated, explosives limits must be reduced to the maximum amount allowed by the existing base or restrictive easement boundary. IB separation will also be applied to (but not limited to):

(1) Main power houses providing vital utilities to a major part of the installation.

(2) Storehouses, shops and essential facilities which must not be placed at risk because of their vital nature or high intrinsic value.

(3) Functions which would cause an immediate secondary hazard because of their failure to operate.

(4) Joint use runways. For Q-D purposes, joint use runways are the same as base boundaries, and the restrictions in a above apply.

(5) Certain electrical transmission lines (paragraph 6-4c(2)).

(6) EOD facilities (offices, classrooms, shops, etc).

(7) Public roadways with 5,000 or more vehicles per day. (Traffic density will be determined for a 24-hour period on days which reflect normal busy periods.)

b. Public Traffic Route (PTR) Distance:

(1) For mass-detonating explosives, these distances are 60 percent of the incremental IB distances. While a building is stationary and subject to constant risk, the exposure of a passenger train or automotive vehicle, for example, is temporary. Vehicles on the road should suffer little damage unless they are hit by a fragment or the blast wave causes the driver to lose control. Although persons in the open should not be injured directly by blast or shock, some may be injured by fragments.

(2) Minimum PTR distance for class/division 1.1 and 1.2 explosives are based on 60 percent of the minimum IB distance. See paragraph 5-11a(2).

(3) PTR separation is also used to:

(a) Open passenger load and unload areas.

(b) Joint Military - Nonmilitary Use Taxiways.

(c) Open recreational areas.

(d) Military training areas, such as RED HORSE or other combatant-type exercises, instruction areas for small arms firing ranges, or similar fixed facilities designed for permanent use by groups or classes.

(e) Personnel exposed to operations that are conducted by remote control procedures. Minimum PTR fragment distance need not be applied. See chapter 10 for additional guidance on protecting operating personnel.

(f) Ground control approach facilities and equipment.

(g) Public roadways with less than 5,000 vehicles per day. (For roadways with less than 200 vehicles per day, no minimum fragment distance need be applied.)

c. Intraline (IL) Distance. These distances are the minimum used to separate:

(1) Any two buildings within an explosives operating line or to separate buildings housing successive steps of a single production or maintenance operation.

(2) Explosives operating buildings from explosives storage locations, including magazines servicing the operating line. This also applies to field operations in magazine areas when performing minor maintenance, packaging, or surveillance inspections.

(3) Operating buildings which are not a part of an "operating line" from each other if each building presents similar explosives hazards, that is, mass detonation, fragment hazard, etc.

(4) Structures housing nonexplosives operations from explosives operating buildings, storage magazines, and explosives-loaded aircraft if such structures are used in direct support of the explosives operation or area.

(5) Facilities of a tactical missile site.

(6) Certain other facilities exclusively serving explosives areas or locations (paragraph 5-14).

(7) Construction activities from explosives facilities or areas used for loading of aircraft with explosives. This separation requirement applies to all major construction activities whether being accomplished by civilian contractors or military construction teams. Donor facility explosives quantities should be reduced as necessary and feasible to realize this separation for the duration of construction activities.

d. Intermagazine (IM) Distance. This is the minimum distance allowed from any PES to another explosives location. The required separation depends on the type of magazine, location, and the type and quantity of explosives stored. It is expected to prevent blast propagation from one magazine to another. It offers reasonable protection against propagation from fragment impact. It does not protect magazines, except possibly earth-covered magazines, from severe structural damage. When less than required intermagazine separation exists between any two

or more explosives locations, the quantities of explosives in these locations must be added to form a single, combined explosives location. For this reason, any separation between explosives locations less than IM distance may not be waived according to chapter 11.

e. Fragment Distance. Fragment distance is based on the number of "hazardous fragments" in a given area. See fragmentation in attachment 2.

5-4. Description of the Hazard Classification System:

a. The DOD hazard classification system is to be applied in the development, manufacture, test, maintenance, storage, handling, transportation, loading, and unloading of vehicles and aircraft of ammunition and explosives. The classes and divisions identify hazards and are used to determine the levels of protection for personnel and property from the effects of fires and explosions on and off military installations.

b. The DOD hazard classification system is based on the system recommended for international use by the United Nations Organization. It consists of nine classes for dangerous goods. Ammunition and explosives are included in "Class 1, Explosives." Ammunition without explosive components, but which contains toxic chemical agents in bulk, is included in "Class 6, Poisonous (Toxic) and Infectious Substances."

c. The ammunition and explosives hazard class is subdivided into divisions based on the nature of the hazard and its potential for injury or damage. The divisions are not based on compatibility groupings or intended use. The list of items for each division contains examples of the type of product in that division, but does not include all articles which may be in the division.

d. The separation of the hazard class into divisions does not always mean that the different items in a division may be stored together. Also, some items may appear in more than one division. This depends on the degree of confinement or separation, type of packaging, storage configuration, or state of assembly.

5-5. Hazard Classes and Divisions:

a. Class 1 is divided into four divisions which show the types of hazards expected:

(1) Class/Division 1.1 (Mass-Detonating):

(a) Items in this division are principally a blast hazard and may be expected to mass-detonate when a small portion is initiated by any means.

(b) These explosions generally cause severe structural damage to adjacent objects. Propagation may occur so rapidly to explosives stored nearby which are unprotected from the initially exploding stack, that the quantities must be considered as a single source for Q-D purposes. The combined shock wave, in this case, is the same as a single detonation of a charge equal to the total of the stacks.

(c) Items in class/division 1.1 include bulk explosives, some propellants, mines, bombs, demolition charges, missile warheads, rockets, palletized projectiles loaded with TNT or Comp B, mass-detonating cluster bomb units (CBU), and ammunition components having mass-detonating characteristics.

(d) Explosives and munitions in class/division 1.1 will also generally present a fragmentation hazard, either from the explosive device or from the packaging or facility in which the explosives are stored. Unless otherwise specified, a minimum distance of 1250 feet will be used to separate class/division 1.1 explosives from IBs. Some munitions items have been tested and demonstrated to have a lesser fragment hazard. In these instances, the fragment hazard distance will be given in parentheses where the hazard classification is listed, such as (07) 1.1 for a 700-foot-fragment hazard.

(2) Class/Division 1.2 (Nonmass-Detonating, Fragment-Producing):

(a) These are items whose principal hazard is fragments, but will have an associated blast hazard. The hazards may be either individual or in combination, depending on the item's storage configuration, type of packing, and quantity. Minimum separation distances, based on the range of hazardous fragments, must be used for IB and public highway traffic route distances. Because most of the hazardous fragments will fall within a minimum distance, which is determined during hazard classification testing (400, 800, 1200, and 1800 feet), fragment distance categories are established for class/division 1.2. The most common categories are 04, 08, 12, and 18, corresponding to the distance in hundreds of feet.

(b) Although the fragment distance varies for items within a category, the distance is essentially the same for one as for several items. For these items, the distance varies according to packing, state of assembly, charge-weight ratio, and caliber. These items may explode or detonate progressively when initiated.

(3) Class/Division 1.3 (Mass Fire). These items burn vigorously, and the fires are difficult to put out. Explosions are usually pressure ruptures of containers, which may produce fragments (especially missile motors), but will not produce propagating shock waves or damaging blast overpressure beyond intermagazine distance. A severe hazard of the spread of fire may result from tossing about of burning container materials, propellant, firebrands, or other debris. Toxic effects usually do not exist beyond IB distances.

(4) Class/Division 1.4 (Moderate Fire, No Blast). These items present a fire hazard but no blast hazard. There is virtually no fragmentation or toxic hazard beyond the fire hazard clearance required. The following procedures are to be used only by personnel responsible for hazard classification assignments (that is OO-ALC/MMWE, MSD/SES, AFSC/IGF, AFISC/SEWV).

(a) Devices containing about 1 ounce or less of explosives and classified based on test results as 1.4S may be considered as inert for storage purposes and are not subject to 49 CFR, part 173, for transport.

(b) Devices containing larger quantities of explosives, but also classified as 1.4S based on tests, may be considered inert for storage purposes but must be reviewed by HQ AFISC/SEWV on an individual basis to determine if 49 CFR, part 173, is to be applied for transport.

(5) Insensitive High Explosives (IHE). Although not categorized as a separate class/division, IHE is unique in that it is a class/division 1.1 explosive substance which, although mass-detonating, is so insensitive that there is negligible probability of initiation or transition from burning to detonation in transport or storage. IHE ammunition is that ammunition which contains IHE substances and which has demonstrated through test results that the mass and confinement effects of the ammunition case are negligible on the probability of initiation or transition from burning to detonation of the IHE in transport or storage. IHE ammunition, when intentionally initiated, will be incapable of transferring detonation to another IHE-filled munition (that is, propagating). Paragraph 5-8b(5) through (7) outlines separation criteria.

b. Class 6, Division 1, Chemical Items. These items are toxic chemical agents. They are usually assembled without explosive components. Q-D separations are not required for this class; however, they will be stored separately from explosives (except as noted in paragraph 3-13h and table 4-1, note 2c). Agent persistence, volatility, toxicity, or other features may create the need for a safety criteria for an item. When a safety separation appears necessary, request information from OO-ALC/MMW, Hill AFB UT 84056-5609.

Section B—Q-D Applications

5-6. General Information. Q-D separations ensure an acceptable level of risk between an explosives location, called a Potential Explosion Site (PES), and surrounding facilities, called Exposed Sites (ES). Q-D principles are based on four factors which are discussed in the following paragraphs.

a. The type of PES.
b. The explosives content of the PES.
c. The type of ES.
d. The distance separating the PES from the ES.

5-7. Potential Explosion Sites. Most common PESs are defined in attachment 2 and shown in table 5-1. Separations for certain specialized PESs are covered in section C of this chapter.

5-8. Explosives Content of PESs. The content is based on the type, quantity, packaging, and class/division of the explosives present. The content is expressed as a net explosives weight (NEW) in pounds.

a. Determining Explosives Content of Items:

(1) The NEW or the high explosives equivalency of a specific explosive, explosive item, component, or assembled weapon can be found in TO 11A-1-46. If the information is not available in this publication, request it from OO-ALC/MMWE, Hill AFB UT 84056-5609.

(2) The explosives content of items listed in TO 11A-1-46 are determined by OO-ALC/MMWE as follows:

(a) For items containing only mass-detonating explosives. The explosive content equals the NEW.

(b) For items containing only nonmass-detonating explosives.

1. Propellants. The explosives content equals the net propellant weight.

2. Pyrotechnic items. The explosives content equal the sum of the net weight of explosives and pyrotechnic compositions involved.

3. Bulk metal powders and pyrotechnic compositions. The explosives content is the sum of the net weights of metal powder and pyrotechnic compositions in containers.

(c) For other ammunition containing both mass-detonating and nonmass-detonating explosives. The explosives content is the net weight of high explosives plus a suitable contribution, as determined by test, from propellant, pyrotechnic components, or expelling charges.

b. Determining the Explosives Content of a PES. Follow these steps, in the order shown, for the proper solution (see chapter 12 for exceptions for specific tactical missiles):

(1) Determine the explosives weight of each type item involved and the total explosives weight of each explosives class/division.

(2) When all items stored in a single building or location area are of the same class/division, use the applicable column of table 5-1 for that class/division.

(3) Combinations of mass-detonating and nonmass-detonating ammunition and explosives (excluding class/division 1.4) will be treated on the basis that all explosives are subject to mass detonation. The total quantity of class/division 1.1, 1.2, and 1.3 present will be treated as class/division 1.1. In the event that the nonmass-detonating items require a greater distance than the class/division 1.1 distance so computed, the greater distance is mandatory.

(4) Combinations of nonmass-detonating ammunition and explosives of different class/divisions 1.2, 1.3, and 1.4 will be treated as follows:

(a) Determine the required separation for each class/division according to table 5-1.

(b) Use the greatest separation of those determined.

(5) Bulk insensitive high explosives are stored as though they were class/division 1.3, provided they are:

(a) Separated from all class/division 1.1 and 1.2 PESs by at least intermagazine distance.

(b) Stored alone or only with other class/division 1.3 or 1.4 explosives.

(6) When bulk IHE is stored with class/division 1.1 or 1.2, or when the required separations listed above are not maintained, the following rules apply:

(a) When stored with class/division 1.1 or at less than intermagazine distance from a class/division 1.1 PES, consider the bulk IHE to be class/division 1.1.

(b) When stored at less than intermagazine distance from or with class/division 1.2, consider both the class/division 1.2 and bulk IHE as class/division 1.1.

(7) IHE munitions may be assigned to either class/division 1.2, 1.3, or 1.4, depending on design and configuration. See TO 11A-1-46 for the assigned classification. Nuclear weapons with IHE have been certified to be classification 1.4 (except in the United Kingdom where class/division 1.2 must be applied) with compatibility group D. When IHE munitions are stored with compatible items of other class/divisions, the most restrictive class/division present will apply to the combination.

5-9. Exposed Sites. Most common exposed sites are defined in attachment 2 and listed in table 5-1.

5-10. Measuring Distance:

a. Measure the distance to or from the outside of the nearest wall of the structure or room containing explosives. When a structure is subdivided so that mass detonation between compartments will not occur, measure from the outside of the nearest wall of the compartment containing the greatest explosives hazard. In some overseas areas, measurements may be made from inside the nearest wall of earth-covered igloos when specifically approved by HQ AFISC/SEWV. Measurements for open storage, such as modules and revetments, are made from stack face to stack face.

b. Where explosives are outdoors, or on aircraft parked in the open or in unhardened protective shelters, measure distances to the explosives. In hardened aircraft shelters (HAS), measure distances from the external wall of the shelter or stall containing the explosives or explosives-loaded aircraft. Measure distances from the center of large missile silos, launchers, or launch pads.

c. Measure to the nearest point of a nonexplosives location, building, aircraft, or taxiway.

d. Measure to the centerline of the runway.

e. Measure to the nearest edge of open recreational areas. For golf courses, measure to the nearest edge of the tee or green, or to the centerline of the fairway.

f. Determine front, rear, and side exposures to and from igloos and HASs according to figure 5-1.

g. Measure separation distances along a straight line. Express all distances in feet. For large intervening topographical features, such as hills, measure distance over or around the feature, whichever is shortest.

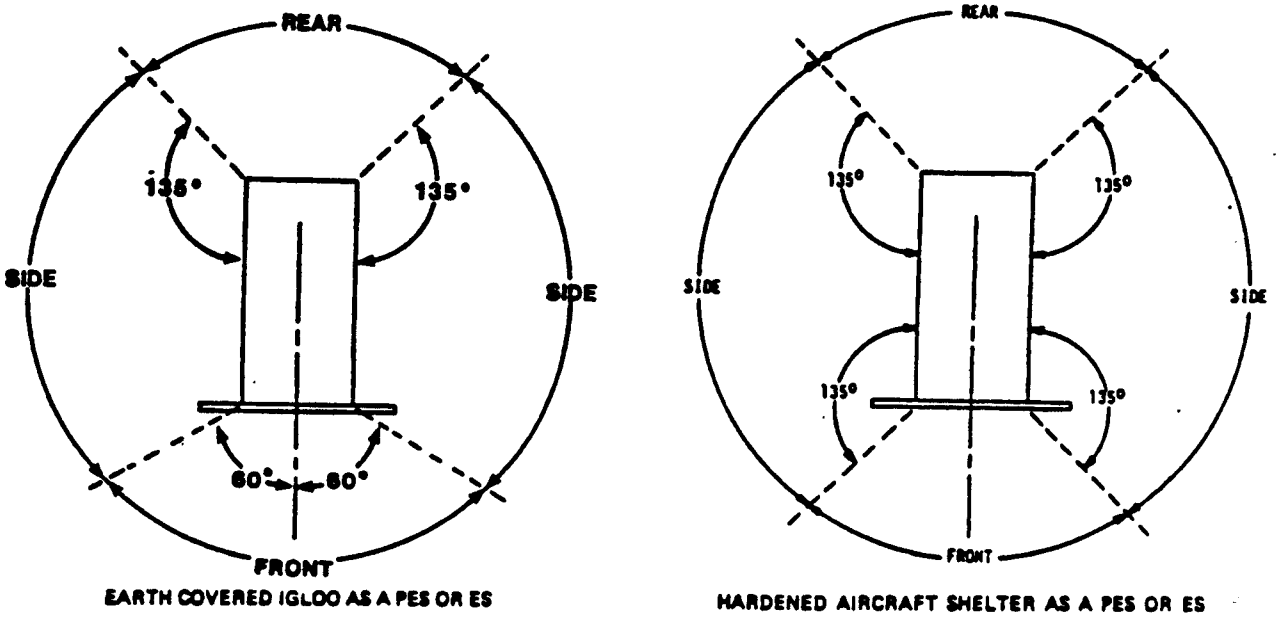

Figure 5-1. Front, Rear, and Side Exposure Boundaries.

5-11. Determining Q-D Separations:

a. Table 5-1 shows the Q-D criteria for each class/division, type of PES, and type of ES. Separation criteria generally fall into two types.

(1) K-Factors. Net explosives weight is used to calculate Q-D separations by means of the formula:

$D = KW^{1/3}$,

Where:

D = required distance (in feet),

K = protection factor depending on the degree of risk assumed or permitted

$W^{1/3}$ = cube root of the net explosives weight (in pounds).

Distance requirements are sometimes expressed by the value of K, using the terminology K9, K11, K18, ... to mean K equals 9, K equals 11, K equals 18, etc. When the criteria in table 5-2 are expressed as a K-factor, go to the applicable column of table 5-2 to find the required separation corresponding to the explosives content of the PES under consideration. For an existing PES, the maximum explosives content allowed is determined by the actual distance to the ES, as shown in the applicable column of table 5-2.

(2) Minimum Distances. While K-factor criteria provide protection against blast, minimum distances, when shown in table 5-1, are based on fragment distances (paragraph 5-3e) and provide protection from most hazardous fragments. As such, these distances cannot be reduced, except for some specific exceptions listed in the notes to table 5-1 and in chapter 12. Minimum distances fall into two categories:

(a) General distances for class/division 1.1. Where specific item testing or analogy has not established a fragment distance for a class/division 1.1 item, a 1250 foot minimum IB distance is required in most cases (table 5-1).

(b) Specific minimum distances for all class/division 1.2 and some class/division 1.1 and 1.3 explosives. Based on testing or analogy, fragment distances have been determined for some specific stocklisted items. Specific minimum distances, when known, are shown in hundreds of feet by a numerical figure (in parentheses) to the left of the class/division designator. For example, (07)1.1 would indicate a class/division 1.1 item with a 700-foot-minimum IB distance. Minimum PTR distance (paragraph 5-3b(2)) would be 60 percent of 700 feet, or 420 feet.

NOTE: These are minimum distances. For large quantities of hazard class/division 1.1 items, the total NEW content of the PES must be considered since the overpressure may require a greater separation.

(3) The quantity of explosives allowed in each PES is the amount permitted by the distance calculated from table 5-1 to an adjacent ES. Where the intersecting block in table 5-1 shows one or more K-factors and minimum distances, the required separation is the greater of those calculated by K-factor or the minimum distances. Where there are two or more adjacent ESs, the quantity allowed at the PES will be the smallest of the amounts permitted by considering each ES, in turn, using the criteria in table 5-1.

(4) Where the total quantity is subdivided and separated by a suitable barrier or intermagazine distance, the net weight of the subdivision requiring the greatest distance will apply. Where prescribed separations or barriers are not provided between explosives locations, the total net weight of all explosives (or authorized equivalencies) will be used.

(5) The separation distances between explosives locations shown in table 5-1 assume that both the PES and ES contain the same class/division explosives. Because propagation mechanisms and acceptable levels of safety differ for different class/division explosives, the separations shown may not apply when the PES and ES are not sited for the same class/division. Normally, explosives locations are sited for the highest class/division, usually 1.1, to be stored or maintained. Where adjacent explosives locations are to be sited for different class/divisions, provide details through channels to HQ AFISC/SEWV, Norton AFB CA 92409-7001, for determining proper separation distances.

b. Explosives Content Limitations. Regardless of actual separations, maximum quantity limitations are imposed on certain hazard class/divisions and types of PESs, as follows:

Class/ Division	Type PES	Maximum Explosives Content Per Location (lbs NEW)
1.1	Standard igloo	500,000
	Nonstandard igloo	250,000
	Aboveground magazine	500,000
	Modules (per cell) at K2	500,000
	Modules (per cell) at K1.1	250,000
	Aircraft shelters	10,000
	Flightline ready service storage facilities	10,000
(18)1.2	All PESs	500,000
(18)1.2	All PESs	500,000

c. TOs 11N-20-7 provides limiting factors for special weapons and, when more restrictive, override Q-D criteria in this regulation.

d. Where it is determined that Q-D criteria do not apply to a specific weapon system or a given situation, HQ AFISC/SEWV will furnish separate instructions upon request. Such cases may include unusual circumstances, configurations, protection, or hazards.

5-12. Hardening Exposed Sites. Facilities which have been designed and constructed to provide resistance to blast and fragment damage and, when applicable, to protect personnel inside from overpressure are considered to be hardened. Buildings hardened to a specific level (as determined by test or analysis) may be located at that blast level. For example, an alert crew facility requires K18 separation from combat loaded aircraft. This equates to a peak overpressure of 3.5 pounds per square inch (psi). Engineering analysis indicates that, for this hardened alert crew facility, a 26 psi external peak overpressure will create no more than 3.5 psi overpressure within the structure, and that fragments will not penetrate or cause spalling. K6 separation equates to 26 psi external peak overpressure. In this example, the hardened facility can be located at the reduced separation of K6 from the combat aircraft. The following facilities have been evaluated and approved for separation at reduced distances, based on their degree of hardening; except that all facilities sited for people, 300 feet minimum separation is required from a HAS.

NOTE: Those facilities sited at less than 300 feet from a HAS before 1 January 1988, no waiver or exemption is required.

a. Liquid Oxygen (LOX) Storage Facility - K9

b. POL Truck Shelters - K9

c. Chemical Biological Radiological (CBR) Collective Protection Facility - K7

d. Hardened Squadron Operations Facility - K7

e. Response Force Tactical Facility (RFTF) - K9

f. Survivable Collective Protection System (SCPS) With 5 feet of Earth Cover - K3. With less than 5 feet of earth cover (never less than 3 feet), - K5. Near a HAS, a 300-foot-minimum separation is required.

NOTE: Those sited at less than 300 feet from a HAS before 1 September 1988, no waiver or exemption is required if they meet all other criteria.

Table 5-1. Quantity-Distance Separation Criteria.

HAZARD CLASS/DIVISION →			CLASS/DIVISION 1.1								
LINE	COLUMN →		1	2	3	4	5	6	7	8	9
	FROM → / TO: ↓	POTENTIAL EXPLOSION SITE (PES) / EXPOSED SITE (ES) (EXPLOSIVES)	EARTH COVERED IGLOO (1)				ABOVE GROUND MAGAZINE, UNBARRICADED (2)	ABOVE GROUND MAGAZINE, BARRICADED (2)(3)	BARRICADED MODULE (38)	OPERATING LOCATION, UNBARRICADED (46)	OPERATING LOCATION, BARRICADED (3)(46)
			SIDE	REAR	FRONT UNBARRICADED (39)	FRONT, BARRICADED (39)					
1	EARTH COVERED IGLOO (1)	SIDE	K 1.25 (14)	K1.25 (14)	K2.75 (14)	K2.75 (14)	K4	K4	K1.25 (14)	K4	K4
2		REAR	K1.25 (14)	K1.25 (14)	K2	K2	K4	K4	K1.25 (14)	K4	K4
3		FRONT, UNBARRICADED (39)	K2.75 (14)	K2	K11 (5)	K6 (5)	K11	K6	K6	K11	K6
4		FRONT, BARRICADED (39)	K2.75 (14)	K2	K6 (5)	K6 (5)	K6	K6	K6	K6	K6
5	ABOVE GROUND MAGAZINE, UNBARRICADED (2)		K6 (31)	K6 (31)	K11	K6 (31)	K11	K6 (31)	K6 (31)	K11	K6
6	ABOVE GROUND MAGAZINE, BARRICADED (2)(3)		K4.5 (31)(55)	K4.5 (31)(55)	K6 (31)	K6 (31)	K6 (31)	K6 (31)	K6 (31)	K6	K6
7	BARRICADED MODULE (38)		K1.25 (14)	K1.25 (14)	K6 (31)	K6 (31)	K6 (31)	K6 (31)	K1.1 (4)	K6	K6
8	OPERATING LOCATION, UNBARRICADED		K18 (61)(6)	K18 (61)(6)	K18	K18 (6)	K18	K18 (6)	K18 (6)	K18	K18 (6)
9	OPERATING LOCATION, BARRICADED (3)		K18 (61)(6)	K18 (61)(6)	K18 (6)	K18 (6)	K18 (6)	K18 (6)	K18 (6)	K18 (6)	K18 (6)
10	COMBAT AIRCRAFT PARKING AREA		K18	K18	K30	K30	K30	K30	K30	K30	K30
11	AIRCRAFT EXPLOSIVES CARGO PARKING AREA		K6 (55)	K6 (55)	K11 (7)	K6	K11 (7)	K6	K6	K11 (7)	K6
12	READY EXPLOSIVES FACILITY		K6 (55)	K6 (55)	K11 (7)	K6	K11 (7)	K6	K6	K11 (7)	K6
13	HARDENED AIRCRAFT SHELTER (12)(37)		K5 (51)	K5 (51)	K8	K8	K8	K8	K8	K8	K8
14-20	RESERVED FOR FUTURE USE										

Table 5-1. Continued.

CLASS/DIVISION 1.1					CLASS/DIVISION 1.2				CLASS/DIVISION 1.3	CLASS/DIVISION 1.4
10	11	12	13	14	15	16	17	18	19	20
COMBAT AIRCRAFT PARKING AREA	AIRCRAFT EXPLOSIVES CARGO PARKING AREA (32)	READY EXPLOSIVES FACILITY	HARDENED AIRCRAFT SHELTER (EXCEPT 2ND & 3RD GENERATION) (37)	2ND & 3RD GENERATION AIRCRAFT SHELTER (37)	ALL TYPES OF POTENTIAL EXPLOSION SITE (10) (11)				ALL TYPES OF POTENTIAL EXPLOSION SITE (13) (10) (21)	ALL TYPES OF POTENTIAL EXPLOSION SITE (13) (19) (20)
					(04) (13)	(08) (13)	(12) (13)	(16)		
K4	K4	K4	K4	K4	100' MIN (41) (26)	100' MIN (41) (26)	100' MIN (41) (26)	100' MIN (26)	USE TABLE 5-3, COL A	100' MIN (26)
K4	K4	K4	K4	K4	100' MIN (41) (26)	100' MIN (41) (26)	100' MIN (41) (26)	100' MIN (26)	USE TABLE 5-3, COL A	100' MIN (26)
K11 (7)	K11 (7)	K11 (7)	K11 (8)	K11 (8)	100' MIN (41) (26)	100' MIN (41) (26)	100' MIN (41) (26)	100' MIN (26)	USE TABLE 5-3, COL A	100' MIN (26)
K6	K6	K6	K6	K6	100' MIN (41) (26)	100' MIN (41) (26)	100' MIN (41) (26)	100' MIN (26)	USE TABLE 5-3, COL A	100' MIN (26)
K11 (7)	K11 (7)	K11 (7)	K11 (8)	K11 (8)	200' MIN (41)	300' MIN (41)	300' MIN (41)	300' MIN	USE TABLE 5-3, COL A	100' MIN (26)
K6	K6	K6	K6	K6	200' MIN (41)	300' MIN (41)	300' MIN (41)	300' MIN	USE TABLE 5-3, COL A	100' MIN (26)
K6	K6	K6	K6	K6	200' MIN (41) (16)	300' MIN (41) (16)	300' MIN (41) (16)	300' MIN (16)	USE TABLE 5-3, COL A	100' MIN (26)
K18	K18 (6)	K18 (6)	K18 300' MIN (23) (6)	K18 300' MIN (23) (6)	200' MIN (41)	400' MIN (41) (58)	600' MIN (41) (58)	900' MIN (41)	USE TABLE 5-3, COL A	100' MIN (26)
K18	K18 (6)	K18 (6)	K18 300' MIN (23) (6)	K18 300' MIN (23) (6)	200' MIN (41)	400' MIN (41) (58)	600' MIN (41) (58)	900' MIN (41)	USE TABLE 5-3, COL A	100' MIN (26)
K11 (22) (7)	K11 (7)	K11 (7)	K11 (8)	K11 (8)	240' MIN (17)	480' MIN (17)	720' MIN (17)	1080' MIN (17)	USE TABLE 5-3, COL B (17)	100' MIN (17)
K11 (7)	K11 (7)	K11 (7)	K11 (8)	K11 (8)	200' MIN (41) (18)	300' MIN (41) (18)	300' MIN (41) (18)	300' MIN (18)	USE TABLE 5-3, COL A (18)	100' MIN (18) (26)
K11 (7)	K11 (7)	SEE TABLE 5-6	SEE TABLE 5-6	SEE TABLE 5-6	200' MIN (41) (15)	300' MIN (41) (15)	300' MIN (41) (15)	300' MIN (15)	USE TABLE 5-3, COL A (15)	100' MIN (15) (26)
K2.75 (50)	K2.75 (50)	SEE PARA 5-21	SEE PARA 5-21	SEE PARA 5-21	240' MIN (17)	480' MIN (17)	720' MIN (17)	1080' MIN (17)	USE TABLE 5-3, COL B (17)	100' MIN (17)

Table 5-1. Continued.

HAZARD CLASS/DIVISION →			CLASS/DIVISION 1.1								
LINE ↓	COLUMN →		1	2	3	4	5	6	7	8	9
	TO: ↓ EXPOSED SITE (ES) (NON-EXPLOSIVE)	FROM: → POTENTIAL EXPLOSION SITE (PES)	EARTH COVERED IGLOO (1)				ABOVE GROUND MAGAZINE, UNBARRICADED (2)	ABOVE GROUND MAGAZINE, BARRICADED (2) (3)	BARRICADED MODULE (38)	OPERATING LOCATION, UNBARRICADED (46)	OPERATING LOCATION, BARRICADED (3) (46)
			SIDE	REAR	FRONT, UNBARRICADED (38)	FRONT, BARRICADED (38)					
21	AIRFIELD, MILITARY USE ONLY	RUNWAY	K18 (61) (30)	K18 (61) (30)	K30 (30)	K30 (30)	K30 (30)	K30 (30)	K30 (30)	K30	K30
22		TAXIWAY	K18 (61) (30)	K18 (61) (30)	K21/30 (30)	K21/30 (30)	K24/30 (30)	K24/30 (30)	K24/30 (30)	K24/30	K24/30
23	AIRFIELD, JOINT MILITARY/ NONMILITARY USE	RUNWAY	K35/50 1250'MIN (47) (52)	K25/50 1250'MIN (47) (52)	K35/50 1250'MIN (47) (52)	K35/50 1250'MIN (47) (52)	K40/50 1250'MIN (47)	K40/50 1250 'MIN (47)	K40/50 1250'MIN (47)	K40/50 1250'MIN (47)	K40/50 1250'MIN (47)
24		TAXIWAY	K21/30 750'MIN (53) (48)	K15/30 750'MIN (48) (53)	K21/30 750'MIN (48) (53)	K21/30 750'MIN (48) (53)	K24/30 750'MIN (48)	K24/30 750'MIN (48)	K24/30 750'MIN (48)	K24/30 750'MIN (48)	K24/30 750'MIN (48)
25	NONEXPLOSIVES LOADED AIRCRAFT (59)		K35/50 1250'MIN (42) (47) (52)	K25/50 1250'MIN (42) (47) (52)	K35/50 1250'MIN (42) (47) (52)	K35/50 1250'MIN (42) (47) (52)	K40/50 1250'MIN (42) (47)	K40/50 1250'MIN (42) (47)	K40/50 1250'MIN (42) (47)	K40/50 1250'MIN (42) (47)	K40/50 1250'MIN (42) (47)
26	PASSENGER LOAD/UNLOAD AREA (45)		K21/30 750'MIN (48) (53)	K15/30 750'MIN (48) (53)	K21/30 750'MIN (48) (53)	K21/30 750'MIN (48) (53)	K24/30 750'MIN (48)	K24/30 750'MIN (48)	K24/30 750'MIN (48)	K24/30 750'MIN (48)	K24/30 750'MIN (48)
27	FACILITIES FOR COMBAT AIRCRAFT ALERT FORCES (49)		K18 (61)	K18 (61)	K18	K18	K18	K18	K18	K18	K18
28	ABOVE GROUND UTILITIES, EXCEPT POWER LINES (24)		K21/30 750'MIN (48) (53)	K15/30 750'MIN (48) (53)	K21/30 750'MIN (48) (53)	K21/30 750'MIN (48) (53)	K24/30 750'MIN (48)	K24/30 750'MIN (48)	K24/30 750'MIN (25) (48)	K24/30 750'MIN (25) (48)	K24/30 750'MIN (25) (48)
29	UNDERGROUND UTILITIES & POL FACILITES, OVER 500 GALLON (24) (44)		K3 80'MIN	K3 80'MIN	K3 80'MIN	K3 80'MIN	K3 80'MIN	K3 80'MIN	K3 80'MIN	K3 80'MIN	K3 80'MIN
30	POL FACILITIES, ABOVE GROUND, OVER 500 GALLON (44)		K35 1250'MIN (54)	K35 1250'MIN (54)	K35 1250' MIN (54)	K35 1250' MIN (54)	K40 1250' MIN	K40 1250' MIN	K40 1250' MIN	K40 1250' MIN	K40 1250' MIN
31	PUBLIC TRAFFIC ROUTE (9)		K21/30 750'MIN (48) (53)	K15/30 750'MIN (48) (53)	K21/30 750'MIN (48) (53)	K21/30 750'MIN (48) (53)	K24/30 750'MIN (48)	K24/30 750'MIN (48)	K24/30 750'MIN (48)	K24/30 750'MIN (48)	K24/30 750'MIN (48)
32	RECREATIONAL AREA/ FACILITY (34)		K35/50 1250'MIN (47) (52)	K25/50 1250'MIN (47) (52)	K35/50 1250'MIN (47) (52)	K35/50 1250'MIN (47) (52)	K40/50 1250'MIN (47)	K40/50 1250'MIN (47)	K40/50 1250'MIN (47)	K40/50 1250'MIN (47)	K40/50 1250'MIN (47)
33	RELATED FACILITY (36)		K18 (61) (6)	K18 (61) (6)	K18 (6)	K18 (6)	K18 (6)	K18 (6)	K18 (6)	K18 (6)	K18 (6)
34	INHABITED BUILDING (60) (33)		K35/50 1250'MIN (47) (52)	K25/50 1250'MIN (47) (52)	K35/50 1250'MIN (47) (52)	K35/50 1250'MIN (47) (52)	K40/50 1250'MIN (47)	K40/50 1250'MIN (47)	K40/50 1250'MIN (47)	K40/50 1250'MIN	K40/50 1250'MIN (47)

Table 5-1. Continued.

CLASS/DIVISION 1.1					CLASS/DIVISION 1.2				CLASS/ DIVISION 1.3	CLASS/ DIVISION 1.4
10	11	12	13	14	15	16	17	18	19	20
COMBAT AIRCRAFT PARKING AREA	AIRCRAFT EXPLOSIVES CARGO PARKING AREA (32)	READY EXPLOSIVES FACILITY	HARDENED AIRCRAFT SHELTER (EXCEPT 2ND & 3RD GENERATION) (37)	2ND & 3RD GENERATION AIRCRAFT SHELTER (37)	ALL TYPES OF POTENTIAL EXPLOSION SITE (10) (11) (32)				ALL TYPES OF POTENTIAL EXPLOSION SITE (32)	ALL TYPES OF POTENTIAL EXPLOSION SITE
					(04) (13)	(08) (13)	(12) (13)	(16)	(13) (10) (21)	(13) (10) (20)
NONE REQUIRED (56)	NONE REQUIRED (56)	NONE REQUIRED (56)	NONE REQUIRED (56)	NONE REQUIRED (56)	240' MIN (17) (30)	480' MIN (17) (30)	720' MIN (17) (30)	1080' MIN (17) (30)	USE TABLE 5-3, COL B (17) (30)	100' MIN (17)
NONE REQUIRED (56)	NONE REQUIRED (56)	NONE REQUIRED (56)	NONE REQUIRED (56)	NONE REQUIRED (56)	240' MIN (17) (30)	480' MIN (17) (30)	720' MIN (17) (30)	1080' MIN (17) (30)	USE TABLE 5-3, COL B (17) (30)	100' MIN (17)
K40/50 1250'MIN (47)	K40/50 1250'MIN (47)	K40/50 1250'MIN (47)	K40 REAR K62 SIDE K50 FNT 300' MIN (40)	K40 REAR K62 SIDE K50 FNT 300' MIN (40)	400' MIN	800' MIN	1200' MIN	1600' MIN	USE TABLE 5-3, COL B	100' MIN
K24/30 750'MIN (27) (48)	K24/30 750'MIN (27) (48)	K24/30 750'MIN (48)	K24/30 REAR K37 SIDE K30 FNT 300' MIN (27) (40)	K24/30 K37 SIDE K30 FNT 300' MIN (27) (40)	240' MIN (27)	480' MIN (27)	720' MIN (27)	1080' MIN (27)	USE TABLE 5-3, COL B (27)	100' MIN (27)
K40/50 1250'MIN (43) (47)	K40/50 1250'MIN (43) (47)	K40/50 1250'MIN (43) (47)	K40 REAR K62 SIDE K50 FNT 300' MIN (40) (43)	K40 REAR K62 SIDE K50 FNT 300' MIN (40) (43)	400' MIN (43)	800' MIN (43)	1200' MIN (43)	1600' MIN (43)	USE TABLE 5-3, COL B (43)	100' MIN (43)
K24/30 750'MIN (48)	K24/30 750'MIN (48)	K24/30 750'MIN (48)	K24/30 REAR K37 SIDE K30 FNT 300' MIN (40)	K24/30 REAR K37 SIDE K30 FNT 300' MIN (40)	240' MIN	480' MIN	720' MIN	1080' MIN	USE TABLE 5-3, COL B	100' MIN
K18 (6)	K18 (6)	K18 (6)	K18 300' MIN (23) (6)	K18 300' MIN (23) (6)	200' MIN	400' MIN	600' MIN	800' MIN	USE TABLE 5-3, COL A	100' MIN (26)
K24/30 750'MIN (25) (48)	K24/30 750'MIN (25) (48)	K24/30 750'MIN (25) (48)	K24/30 REAR K37 SIDE K30 FNT (40)	K24/30 REAR K37 SIDE K30 FNT (40)	240' MIN	480' MIN	720' MIN	1080' MIN	USE TABLE 5-3, COL B	100' MIN
K3 80'MIN	K3 80'MIN	K3 80'MIN	K3 80'MIN (23)	K3 80'MIN (23)	80' MIN	80' MIN	80' MIN	80' MIN	80' MIN	80' MIN (26)
K40 1250' MIN	K40 1250' MIN	K40 1250' MIN	K40 REAR K62 SIDE K50 FNT 300' MIN (23)	K40 REAR K62 SIDE K50 FNT 300' MIN (23)	300' MIN (35)	600' MIN	900' MIN	900' MIN	USE TABLE 5-3, COL B 100' MIN 600' MAX (28)	100' MIN (28)
K24/30 750'MIN (48)	K24/30 750'MIN (48)	K24/30 750'MIN (48)	K24/30 REAR K37 SIDE K30 FNT 300' MIN (40)	K24/30 K37 SIDE K30 FNT 300' MIN (40)	240' MIN	480' MIN	720' MIN	1080' MIN	USE TABLE 5-3, COL B	100' MIN
K40/50 1250'MIN (47)	K40/50 1250'MIN (47)	K40/50 1250'MIN (47)	K40 REAR K62 SIDE K50 FNT 300' MIN (40)	K40 REAR K62 SIDE K50 FNT 300' MIN (40)	400' MIN	800' MIN	1200' MIN	1600' MIN	USE TABLE 5-3, COL B	100' MIN
K18 (6)	K18 (6)	K18 (6)	K18 300' MIN (23) (6)	K18 300' MIN (23) (6)	200' MIN	400' MIN	600' MIN	800' MIN	USE TABLE 5-3, COL A	100' MIN (26)
K40/50 1250'MIN (47)	K40/50 1250'MIN (47)	K40/50 1250'MIN (47)	K40 REAR K62 SIDE K50 FNT 300' MIN (40)	K40 REAR K62 SIDE K50 FNT 300' MIN (40)	400' MIN	800' MIN	1200' MIN	1600' MIN	USE TABLE 5-3, COL B	100' MIN

NOTES:

1. Earth-covered igloos must meet the requirements of attachment 2, under the definition of "magazine," subparagraph a, to use the separation criteria shown. Igloos previously sited as "standard igloos" will also use the listed separations. Igloos not meeting the requirements listed under "magazine" in attachment 2, paragraph 63, will be separated as

originally sited or identified to HQ AFISC/SEWV for assignment of applicable separation criteria. Pending receipt of criteria, use listed igloo distances from the side and rear and above ground magazine distances from the front of nonstandard igloos.

2. Includes open air stacks, light structures (for example, Butler buildings), and trucks, trailers, or railcars loaded with explosives. See paragraph 7-20f for vehicle inspection point criteria.

3. Barricades must meet the requirements of paragraph 5-13.

4. Cells which contain buildings heavier than metal Butler-type buildings require K6 barricaded and K11 unbarricaded to all other cells containing class/division 1.1 explosives; however, the MAJCOM may waive barricaded K6 separation to not less than K2. Cells provided with all metal buildings and properly sited for class/division 1.1 may be filled to their physical capacity with nonmass-detonating CBUs and 20 and 30 mm ammunition provided class/division 1.2 distances (other than intermagazine) are met.

5. When any two standard igloos are positioned so that a straight line drawn between the headwalls does not pass through an earth-covered surface of either igloo, the following criteria apply:

a. If each igloo headwall is outside of a 120° sector in front of the other (60° on either side of the igloo centerline, with the vertex of the angle placed so that the sides of the angle pass through the intersections of the headwall and the side walls), K1.25 applies to both igloos.

b. If one igloo headwall is inside and one is outside of the 120° sectors defined in a above, K2.75 applies to both igloos.

c. If both igloos are inside the 120° sectors, use K6 for barricaded exposures and K11 for unbarricaded exposures.

6. Properly barricaded facilities sited at K9 before 1 June 1980 may continue to be used at K9 until a revised siting of that facility is necessary, except as noted below. K18 separations, or reduced intraline distances from earth-covered igloos (table 5-4) are required for new or revised sitings. Barricades should continue to be used in designing new facilities to limit fragment damage. K9 may continue to be used for the following properly barricaded facilities:

a. Buildings housing successive steps of a single production, renovation, or maintenance operation.

b. Hardened response force tactical facilities. No barricade is required to use K9 for RFTFs.

c. Facilities of a tactical missile site.

d. Break rooms and change houses used exclusively by personnel of a, b, or c above.

e. Field operations in magazine areas when performing minor maintenance, packaging, or surveillance inspections.

f. Unoccupied auxiliary power facilities, transformer stations, water treatment and pollution abatement facilities, and other utilities that serve only the flightline or storage area.

7. K6 may be used if a barricade meeting the requirements of paragraph 5-13 separates the PES from the ES.

8. Use K11 where no shelter wall, revetment wall, or barricade separates the PES from the ES. Use K6 where a shelter wall, revetment wall, or barricade separates the PES from the ES.

9. See paragraph 5-3b for additional exposures requiring PTR separation.

10. Earth-covered igloos may be filled to their physical capacity with class/division 1.2 and 1.3 explosives, provided they comply with the construction and siting requirements for class/division 1.1 material. In no case, however, will the required IB and PTR distance be less than the minimum specified if a subdivision of class/division 1.2 is being stored. (Example: 1800 feet for (18) 1.2.) See note 13 for an exception to IB and PTR distance for (04) 1.2 CBUs in HASs.

11. Items in this division present a risk of propagation to adjacent aboveground magazines, particularly when packed in combustible containers. Distances shown are not to be reduced by the presence of barricades or earth cover. Storage in earth-covered igloos is preferred.

12. Separations are based on shelter doors remaining closed, except for aircraft towing, fueling, servicing, runup, or taxi and during integrated combat turnarounds or short periods

when maintenance equipment or munitions are being moved into or out of the shelter. Where doors are left open for extended periods, normal combat aircraft parking area criteria apply.

13. For reasons of operational necessity, 50-pounds NEW or less of class/division (04) 1.2 items may be stored without regard for Q-D requirements. See paragraph 4-10 for licensing requirements. No separation is required for class/division 1.2 (except (18) 1.2), 1.3, or 1.4 munitions in HASs, provided the front doors remain closed. With the doors open, or when doors are not installed, the separations shown apply to the front cone only.

14. In austere areas (paragraph 5-22), K1.25 may be reduced to K1.1, and K2.75 may be reduced to K2.5, where igloo contents are limited to those items listed in paragraph 5-22e.

15. From combat aircraft parking areas, no separation is required.

16. See paragraph 5-22f for reduced separations for austere area storage of nonmass-detonating CBUs and 20 and 30 mm ammunition.

17. From combat aircraft parking areas, HASs, aircraft explosives cargo parking areas, and ready explosives facilities, no separation is required.

18. From combat aircraft parking areas, HASs, and aircraft explosives cargo parking areas, no separation is required.

19. With reasonable care in storage, class/division 1.4 items may be stored in any weatherproof warehouse, if required separation distances to all other facilities are maintained. Earth-covered igloos may be filled to physical capacity with class/division 1.4 explosives without requirement for separation to other facilities.

20. For reasons of operational necessity, limited quantities of class/division 1.4 items may be stored without regard for Q-D. See paragraph 4-10 for licensing requirements.

21. For reasons of operational necessity, 100-pounds NEW or less of class/division 1.3 items may be stored without regard for Q-D. See paragraph 4-10 for licensing requirements.

22. Where explosives-loaded combat aircraft are grouped at less than intermagazine distance, K18 is required between groups. Intervening barricades are recommended between groups but do not reduce the required separation.

23. For 110-pounds (50 kilograms (kg)) NEW or less, no separation is required from the sides or rear of the HAS and the minimum distances shown does not apply to the front exposure.

24. Utilities covered include water, natural gas, steam, sewage, and air. See paragraph 6-4 and 6-5 for power line separations. Use paragraph 3-8 for storage of water for firefighting.

25. K24/30 is the minimum separation authorized. K40/50 should be used where practical.

26. A 50-foot-separation distance may be used from a PES of noncombustible construction.

27. No separation is required between an explosives-loaded aircraft parking area and the taxiways exclusively serving or constructed as part of the area.

28. No less than 50 feet is required from combat aircraft parking areas and aircraft explosives cargo parking areas. Use 100 foot minimum for all other PESs.

29. The 100-foot-minimum separation does not apply to combat aircraft parking areas and aircraft explosives cargo parking areas. All other requirements apply.

30. At overseas locations only, K4.5 may be used for class/division 1.1 storage locations, and 125 feet may be used for nonmass-detonating storage locations. (In NATO, $D=1.8Q^{1/3}$, where D is the distance in meters and Q equals the NEW in kilograms.) The use of these reduced separations is predicated on operational necessity, providing transient risk to military aircraft movements is acceptable. If facilities are to be sited at these distances, the major commander will provide HQ AFISC/SEWV and the Department of Defense Explosives Safety Board (DDESB-KO), 2461 Eisenhower Ave, Alexandria VA 22331-0600, a letter listing all bases at which these distances will be applicable and stating acceptance of transient risk to military aircraft movements. Recertification for each

site plan submitted is not necessary. All USAFE sitings will be as specified in AC/258-D/258, Safety Principles for the Storage of Ammunition and Explosives, as well as this regulation.

31. Barricaded intermagazine separation between existing structures may be waived to K2 by the MAJCOM when deemed essential to meet operational requirements. Explosives storage locations separated by K2 may not contain bulk primary explosives or those items vulnerable to heavy spalling (for example, missile and rocket motors, most special weapons). The MAJCOM will approve contents of the storage locations when granting a K2 waiver. For K2 separations, no deviations will be allowed to the barricade requirements of paragraph 5-13.

32. No separation is required from explosives-loaded cargo aircraft when temporarily parked for refueling, servicing, crew rest or change, or maintenance performed under TO 11A-1-33, if the aircraft is under constant surveillance and explosives are not loaded, unloaded, or handled in any way. These aircraft should be parked on the hot cargo pad. When this is not possible, they will be parked as remotely as practical from hazardous or populated areas.

33. See paragraph 5-3a for additional exposures requiring IB separation.

34. Use PTR distances for recreational facilities in the open, such as golf courses, tennis courts, etc. Use the listed separation where structures, including bleachers, are part of the facility (such as indoor tennis courts, golf clubhouses, etc). No separation is required to recreational areas used exclusively by personnel supporting the PES.

35. From explosives loaded aircraft, use 50 feet as the minimum separation.

36. See paragraph 5-14 for additional information and specific requirements.

37. See paragraph 5-21 for additional information and specific requirements. Use combat aircraft parking area criteria for steel bin revetments and the unhardened front or rear of Korean TAB VEE or Flowthru shelters.

38. See paragraph 5-22 for additional guidance concerning modules. Separations shown apply to side, rear, and barricaded front exposures. For exposures to or from the unbarricaded front of a module, use unbarricaded aboveground magazine criteria. Paragraph 5-28 contains more information on how K-factors relate to overpressure.

39. The front of an igloo is considered unbarricaded within 60° from either side of the igloo centerline unless it is protected by a barricade meeting the requirements of paragraph 5-13.

40. Applies to all class/division 1.1 munitions except AIM-7, AIM-9, and AGM-65 missiles. See paragraph 5-21c for separation distances for these items. For 110-pounds (50 kg) NEW or less, no separation is required from the sides or rear of the HAS and the 300 feet minimum distance does not apply to the front exposure.

41. Column 5 or 6, as applicable, may be used (up to the minimum distance shown) provided the PES was approved for construction before 1 January 1978, if:

a. Corrective action to meet the minimum distance is infeasible.

b. The current hazard posed by the PES is no greater than when constructed (NEW not increased, operations not expanded, ESs not added within minimum distance shown, etc.).

c. Local documentation and periodic review of the situation are made, including original siting date, original NEW limit and use, a map showing ESs at time of original siting, and a statement of why corrective action is infeasible.

42. Criteria shown apply to nonmilitary aircraft. Use incremental K30 to military, nonexplosives-loaded aircraft.

43. The separation to nonexplosives, military aircraft parking areas from combat aircraft parking areas, aircraft explosives cargo parking areas, and ready explosives facilities are considered to be a host MAJCOM function. Separation distances should be coordinated between MAJCOMs when the nonexplosives military aircraft are assigned to another MAJCOM. Parked aero club aircraft are considered nonmilitary aircraft for Q-D purposes.

44. See paragraph 5-25 for special requirements and for separations from 500 gallons of

POL or less. Cut and cover POL tanks are considered underground. For Q-D proposes, hydrazine H-70 facilities are considered as POL.

45. Applies to open locations where passengers enplane or deplane. For structures where passengers assemble, such as terminal buildings, use IB distance.

46. Specific criteria for Rocket Storage, Checkout and Assembly Buildings are contained in paragraph 5-15.

47. The minimum IB distance for specific items and situations (paragraph 12-5) or authorized under paragraph 5-11a(2)(b) will be used in place of the 1250-foot-minimum distance.

48. The minimum PTR distance for specific items and situations (paragraph 12-5) or authorized under paragraph 5-11a(2)(b) will be used in place of the 750-foot-minimum distance.

49. Where alert force facilities are collocated with sheltered alert aircraft sited at less than K18 from other explosives locations, the alert force facilities may also be sited at the lesser distance. Use greater separation where response time will permit. Alert crews and essential support personnel may be housed in the same structure with alert aircraft if aircraft and personnel areas are separated by substantial dividing walls and blast doors.

50. Use K5 barricaded and K9 unbarricaded to the front of a TAB VEE or TAB VEE Modified. K2.75 protects against propagation. If aircraft and shelter survival is desired, use K8.

51. Use K9 from the rear of an igloo to the front of a TAB VEE or TAB VEE Modified. Use K11 from the side of an igloo to the front of a TAB VEE or TAB VEE Modified.

52. K-factors shown apply to 26- by 60-foot or larger igloos. For smaller igloos, use K40/50.

53. K-factors shown apply to 26- by 60-foot or larger igloos. For smaller igloos, use K24/30.

54. K-factors shown apply to 26- by 60-foot or larger igloos. For smaller igloos, use K40.

55. Where a barricade, other than the side or rear of the igloo, separates the PES from the ES, K4.5 may be used. Otherwise, K6 applies.

56. Although no explosives safety separation is required, airfield safety criteria apply. See paragraph 5-24 and AFR 86-14.

57. Intentionally left blank.

58. For quantities of 5,000 pounds or less, a minimum separation of 200 feet may be used between operating locations only.

59. Alert tanker aircraft, when parked with their associated combat-loaded alert aircraft, will be separated from the combat-loaded alert aircraft as though they were combat aircraft.

60. For sparsely populated locations, the minimum 1250-foot fragment distance can be reduced to 900 feet (270 meters (m)) if the PES does not exceed 11,400 pounds (5140 kg), and no more than 25 persons are located in any sector bounded by the sides of a 45° angle, with the vertex at the PES, and the 900 feet (270 m) and 1250 feet (380 m) arcs from the PES.

61. Reduced specific distances for certain exposures may be used. Testing has shown some attenuation of the airblast overpressures from the sides and rear of earth-covered igloos relative to an unconfined surface burst. Intraline distances from earth-covered igloos may be computed from the following factors or directly from table 5-4:

FROM:	NEW (lbs.)	K-FACTOR
Side	1-300K	16
	300K-400K	16-18
	Over 400K	18
Rear	1-100K	12
	100K-300K	12-14
	300K-400K	14-18
	Over 400K	18

Table 5-2. Quantity-Distance Separation Distances.

NET EXPLOSIVE WEIGHT (POUNDS)			DISTANCE FROM POTENTIAL EXPLOSION SITE TO EXPOSED SITE (FOR GIVEN K-FACTOR) (FEET)														
OVER-	NOT OVER-	CUBE ROOT OF UPPER LIMIT	K1.1 IM	K1.25 IM	K2 IM	K2.5 IM	K2.75 IM	K3 POL	K4 IM	K4.5 IM	K5 HAS	K6 IM	K7	K8 HAS	K9 IL	K11 IM	K18 IL
0	1	1.00	2	2	2	3	3	3	4	5	5	6	7	8	9	11	18
1	2	1.26	2	2	3	4	4	4	5	6	6	8	9	10	12	14	23
2	5	1.71	2	3	4	5	5	5	7	8	9	11	12	14	16	19	31
5	10	2.15	3	3	5	6	6	6	9	10	11	13	15	17	20	24	39
10	20	2.71	3	4	6	7	8	8	11	12	14	17	19	22	25	30	49
20	30	3.11	4	4	7	8	9	9	12	14	16	19	22	25	28	35	56
30	40	3.42	4	5	7	9	10	10	14	15	17	21	24	27	31	38	62
40	50	3.68	5	5	8	10	11	11	15	17	18	23	26	29	33	41	66
50	100	4.64	6	6	9	12	13	14	19	21	23	28	32	37	40	51	80
100	200	5.85	7	7	12	15	16	18	23	26	29	35	41	47	53	64	100
200	300	6.69	7	8	13	16	18	20	27	30	33	40	47	54	60	74	120
300	400	7.37	8	9	15	18	20	22	29	33	37	44	52	59	65	81	130
400	500	7.94	9	10	16	20	22	24	32	36	40	48	56	64	70	87	140
500	600	8.43	9	11	17	22	23	25	34	38	42	51	59	67	75	93	150
600	700	8.88	10	11	18	22	24	27	36	40	44	53	62	71	80	98	160
700	800	9.28	10	12	19	24	26	28	37	42	46	56	65	74	84	102	170
800	900	9.65	11	13	19	24	27	29	39	43	48	58	68	77	87	106	175
900	1,000	10.00	11	13	20	25	28	30	40	45	50	60	70	80	90	110	180
1,000	1,500	11.45	13	14	23	28	31	34	46	52	57	69	80	92	105	126	210
1,500	2,000	12.60	14	16	25	32	34	38	50	57	63	76	88	100	115	139	230
2,000	3,000	14.42	16	18	29	36	40	43	58	65	72	86	100	115	130	158	260
3,000	4,000	15.87	17	20	32	40	44	48	63	71	79	95	110	125	145	175	290
4,000	5,000	17.10	19	21	34	42	47	51	68	77	85	103	120	135	155	188	310
5,000	6,000	18.17	20	23	36	46	50	54	73	82	91	109	125	145	165	200	330
6,000	7,000	19.13	21	24	38	48	53	57	77	86	96	115	135	155	170	210	345
7,000	8,000	20.00	22	25	40	50	55	60	80	90	100	120	140	160	180	220	360
8,000	9,000	20.80	23	26	42	52	57	62	83	94	105	125	145	165	185	230	375
9,000	10,000	21.54	24	27	43	54	59	65	86	97	110	130	150	170	195	235	390
10,000	15,000	24.66	28	31	50	62	68	74	99	110	125	150	175	195	225	275	445
15,000	20,000	27.14	30	34	55	68	75	81	110	120	135	165	190	215	245	300	490
20,000	25,000	29.24	33	37	59	74	81	88	115	130	145	180	205	235	265	325	530
25,000	30,000	31.07	35	39	62	78	85	93	125	140	155	185	220	250	280	340	560
30,000	35,000	32.71	36	41	66	82	90	98	130	145	165	200	230	260	295	360	590
35,000	40,000	34.20	38	43	69	85	95	105	135	155	170	205	240	275	310	375	620
40,000	45,000	35.57	40	45	72	89	98	105	140	160	180	215	250	285	320	395	640
45,000	50,000	36.84	41	46	74	90	100	110	145	165	185	220	260	295	330	405	665
50,000	55,000	38.03	42	48	77	96	105	115	150	170	190	230	265	305	340	420	685
55,000	60,000	39.15	44	49	79	98	110	115	155	175	195	235	275	315	350	430	705
60,000	65,000	40.21	45	51	81	105	115	120	160	180	200	240	280	320	360	445	725
65,000	70,000	41.21	45	52	82	105	115	125	165	185	205	245	290	330	370	455	740
70,000	75,000	42.17	46	53	85	110	120	125	170	190	210	255	295	335	380	465	760
75,000	80,000	43.09	47	54	86	110	120	130	170	195	215	260	300	345	390	475	780
80,000	85,000	43.97	49	55	88	110	125	130	175	195	220	265	310	350	395	485	790
85,000	90,000	44.81	50	56	90	110	125	135	180	200	225	270	315	360	405	495	810
90,000	95,000	45.63	51	58	92	115	130	135	185	205	230	275	320	365	410	505	820
95,000	100,000	46.42	51	59	93	115	130	140	185	210	230	280	325	370	420	510	840
100,000	110,000	47.91	53	60	96	120	135	145	190	215	240	290	335	385	435	530	865
110,000	120,000	49.32	54	62	99	125	140	150	195	220	245	300	345	395	445	545	890
120,000	125,000	50.00	55	63	100	125	140	150	200	225	250	300	350	400	450	550	900
125,000	130,000	50.66	56	64	105	130	140	150	205	230	255	305	355	405	460	560	915
130,000	140,000	51.92	58	65	105	130	145	155	210	230	260	315	365	415	470	575	935
140,000	150,000	53.13	59	66	110	130	145	160	215	240	265	320	370	425	480	585	960
150,000	160,000	54.29	60	68	110	140	150	165	215	245	270	330	380	435	490	600	980
160,000	170,000	55.40	61	70	110	140	155	165	220	250	275	335	390	445	500	610	1,000
170,000	175,000	55.93	62	70	110	140	155	170	225	250	280	335	390	445	505	615	1,010
175,000	180,000	56.46	63	71	115	145	160	170	225	255	280	340	395	450	510	625	1,020
180,000	190,000	57.49	64	72	115	145	160	170	230	260	285	345	400	460	520	635	1,035
190,000	200,000	58.48	65	74	115	145	160	175	235	265	290	350	410	470	525	645	1,055
200,000	225,000	60.82	67	76	120	150	165	180	245	275	305	365	425	485	545	670	1,095
225,000	250,000	63.00	70	79	125	160	175	190	250	285	315	380	440	505	565	695	1,135
250,000	275,000	65.03	72	82	135	165	180	195	260	295	325	395	455	520	585	720	1,170
275,000	300,000	66.94	74	84	135	170	185	200	270	300	335	400	470	535	600	735	1,205
300,000	325,000	68.75	76	86	140	175	190	205	275	310	345	415	480	550	620	760	1,240
325,000	350,000	70.47	78	89	140	175	195	210	280	315	350	425	495	565	635	775	1,270
350,000	375,000	72.11	80	91	145	180	200	215	290	325	360	435	505	575	650	795	1,300
375,000	400,000	73.68	81	92	145	185	205	220	295	330	370	440	515	590	665	810	1,330
400,000	425,000	75.18	83	94	155	190	210	225	300	340	375	455	525	600	680	830	1,355
425,000	450,000	76.63	85	96	155	190	210	230	305	345	385	460	535	615	690	845	1,380
450,000	475,000	78.02	86	98	160	200	215	235	310	350	390	470	545	625	705	860	1,405
475,000	500,000	79.37	88	100	160	200	220	240	315	355	395	475	555	635	715	875	1,430

Table 5-2. Continued.

NET EXPLOSIVE WEIGHT (POUNDS)			DISTANCE FROM POTENTIAL EXPLOSION SITE TO EXPOSED SITE (FOR GIVEN K-FACTOR) (FEET)										
OVER-	NOT OVER-	CUBE ROOT OF UPPER LIMIT	K15/30	K21/30	K24/30	K30	K37	K40	K25/50	K35/50	K40/50	K50	K62
			IG-PTR	IG-PTR	PTR	ACFT	HAS-PTR	POL	IG-IB	IG-IB	IB	HAS-IB	HAS-IB
0	1	1.00	15	21	24	30	37	40	25	35	40	50	62
1	2	1.26	19	26	30	38	47	50	32	44	50	63	78
2	5	1.71	26	36	40	52	63	69	43	60	69	85	105
5	10	2.15	32	45	52	65	80	87	54	75	87	110	135
10	20	2.71	41	57	65	82	100	110	68	95	110	135	170
20	30	3.11	47	65	75	94	115	125	78	110	125	155	195
30	40	3.42	51	72	83	105	125	140	86	120	140	170	210
40	50	3.68	55	77	89	115	135	150	92	130	150	185	230
50	100	4.64	70	97	115	140	170	190	115	160	190	230	290
100	200	5.85	88	125	140	180	215	235	145	205	235	290	365
200	300	6.69	100	140	160	205	250	270	165	235	270	335	415
300	400	7.37	110	155	175	225	275	295	185	260	295	370	455
400	500	7.94	120	165	190	240	295	320	200	280	320	395	490
500	600	8.43	125	175	205	255	310	340	210	295	340	420	525
600	700	8.88	135	185	215	270	330	355	220	310	355	445	550
700	800	9.28	140	195	225	280	345	375	230	325	375	465	575
800	900	9.65	145	205	235	290	355	390	240	340	390	485	600
900	1,000	10.00	150	210	240	300	370	400	250	350	400	500	620
1,000	1,500	11.45	170	240	275	345	425	460	285	400	460	570	710
1,500	2,000	12.60	190	265	305	380	465	505	315	440	505	630	780
2,000	3,000	14.42	215	305	350	435	535	580	360	505	580	720	895
3,000	4,000	15.87	240	335	380	480	585	635	395	555	635	795	985
4,000	5,000	17.10	255	360	410	515	635	685	430	600	685	855	1,060
5,000	6,000	18.17	275	380	440	550	670	730	455	635	730	910	1,125
6,000	7,000	19.13	285	400	460	575	710	770	480	670	770	955	1,185
7,000	8,000	20.00	300	420	480	600	740	800	500	700	800	1,000	1,240
8,000	9,000	20.80	310	435	500	625	770	835	520	730	835	1,040	1,290
9,000	10,000	21.54	325	450	520	650	795	865	540	755	865	1,075	1,335
10,000	15,000	24.66	370	520	595	740	NOT	990	615	865	990	NOT	NOT
15,000	20,000	27.14	405	570	655	815	AUTH	1,090	680	950	1,090	AUTH	AUTH
20,000	25,000	29.24	440	615	700	880		1,170	730	1,025	1,170		
25,000	30,000	31.07	465	650	745	935		1,245	775	1,085	1,245		
30,000	35,000	32.71	490	685	785	985		1,310	820	1,145	1,310		
35,000	40,000	34.20	515	720	820	1,030		1,370	855	1,195	1,370		
40,000	45,000	35.57	535	745	855	1,070		1,425	890	1,245	1,425		
45,000	50,000	36.84	555	775	885	1,110		1,475	920	1,290	1,475		
50,000	55,000	38.03	570	800	910	1,145		1,520	950	1,330	1,520		
55,000	60,000	39.15	585	820	940	1,175		1,565	980	1,370	1,565		
60,000	65,000	40.21	605	845	965	1,210		1,610	1,005	1,405	1,610		
65,000	70,000	41.21	620	865	990	1,240		1,650	1,030	1,440	1,650		
70,000	75,000	42.17	635	885	1,010	1,270		1,685	1,055	1,475	1,685		
75,000	80,000	43.09	645	905	1,035	1,295		1,725	1,075	1,510	1,725		
80,000	85,000	43.97	660	925	1,055	1,320		1,760	1,100	1,540	1,760		
85,000	90,000	44.81	670	940	1,075	1,345		1,795	1,120	1,570	1,795		
90,000	95,000	45.63	685	960	1,095	1,370		1,825	1,140	1,595	1,825		
95,000	100,000	46.42	695	975	1,115	1,395		1,855	1,160	1,625	1,855		
100,000	110,000	47.91	770	1,045	1,175	1,440		1,920	1,290	1,740	1,960		
110,000	120,000	49.32	850	1,110	1,240	1,480		1,975	1,415	1,855	2,065		
120,000	125,000	50.00	890	1,145	1,270	1,500		2,000	1,480	1,910	2,115		
125,000	130,000	50.66	925	1,180	1,300	1,520		2,030	1,545	1,965	2,165		
130,000	140,000	51.92	1,005	1,245	1,355	1,560		2,080	1,675	2,070	2,255		
140,000	150,000	53.13	1,085	1,305	1,410	1,595		2,130	1,805	2,175	2,350		
150,000	160,000	54.29	1,160	1,370	1,460	1,630		2,175	1,935	2,280	2,435		
160,000	170,000	55.40	1,240	1,430	1,515	1,665		2,220	2,070	2,385	2,520		
170,000	175,000	55.93	1,280	1,460	1,540	1,680		2,240	2,135	2,435	2,565		
175,000	180,000	56.46	1,320	1,490	1,565	1,695		2,260	2,200	2,485	2,605		
180,000	190,000	57.49	1,400	1,550	1,615	1,725		2,300	2,335	2,585	2,690		
190,000	200,000	58.48	1,480	1,610	1,660	1,755		2,340	2,470	2,680	2,770		
200,000	225,000	60.82	1,685	1,750	1,780	1,825		2,435	2,810	2,920	2,965		
225,000	250,000	63.00	1,890	1,890	1,890	1,890		2,520	3,150	3,150	3,150		
250,000	275,000	65.03	1,950	1,950	1,950	1,950		2,605	3,250	3,250	3,250		
275,000	300,000	66.94	2,005	2,005	2,005	2,005		2,680	3,345	3,345	3,345		
300,000	325,000	68.75	2,065	2,065	2,065	2,065		2,755	3,440	3,440	3,440		
325,000	350,000	70.47	2,115	2,115	2,115	2,115		2,820	3,525	3,525	3,525		
350,000	375,000	72.11	2,165	2,165	2,165	2,165		2,885	3,605	3,605	3,605		
375,000	400,000	73.68	2,210	2,210	2,210	2,210		2,950	3,685	3,685	3,685		
400,000	425,000	75.18	2,250	2,250	2,250	2,250		3,010	3,760	3,760	3,760		
425,000	450,000	76.63	2,300	2,300	2,300	2,300		3,070	3,830	3,830	3,830		
450,000	475,000	78.02	2,340	2,340	2,340	2,340		3,125	3,900	3,900	3,900		
475,000	500,000	79.37	2,380	2,380	2,380	2,380		3,175	3,970	3,970	3,970		

Table 5-2. Continued.

NOTES:

1. To compute distance for K-factors not shown, either use the formula $D = K \times W^{1/3}$ or use multiples of given K-factors, as shown in the following example:

   K36 distance = 2 x K18 distance
   K60 distance = 1.5 x K40 distance
   K300 distance = 10 x K30 distance

2. For weights not shown or weights over 500,000 pounds, distance may be calculated using $D = K \times W^{1/3}$.

3. K24/30, K40/50, etc., are K-factors that vary with NEW. For any of these type K-factors with a lower (Kxx) and upper (Kyy) value, the change in value is as follows:

NEW (pounds)	Kxx/yy Value
0-100,000	Kxx
100,000-250,000	Kxx-Kyy
Over 250,000	Kyy

The K-factors between 100,000 pounds and 250,000 pounds increase gradually, but not proportionately, to the NEW. These changes are based on test results that have shown increased blast effects for large NEWs. For NEWs between the values given, compute the required distance using the following formula:

$$W_X = W_L + (W_H - W_L) \times \frac{(D - D_L)}{(D_H - D_L)}$$

$$D_X = D_L + (D_H - D_L) \times \frac{(W - W_L)}{(W_H - W_L)}$$

Where:

W_X = unknown NEW (for a given D)
D_X = unknown distance (for a given W)
W_H and D_H = known NEW (from "NOT OVER" column) and distance greater than the unknown NEW/distance (from table 5-2)
W_L and D_L = known NEW (from "NOT OVER" column) and distance less than the unknown NEW/distance (from table 5-2)

Table 5-3. Class/Division 1.3 Separation Distances.

NET EXPLOSIVES WEIGHT (LBS)[4]		DISTANCE FROM PES TO ES (FEET)[1]	
OVER-	NOT OVER-	COL A	COL B
		IM/IL	PTR/IB
0	1,000	50	75
1,000	2,000	60	85
2,000	3,000	65	95
3,000	4,000	70	105
4,000	5,000	75	115
5,000	7,500	90	135
7,500	10,000	100	150
10,000	20,000	125	190
20,000	30,000	145	215
30,000	40,000	155	235
40,000	50,000	165	250
50,000	60,000	175	260
60,000	70,000	185	270
70,000	80,000	190	280
80,000	90,000	195	295
90,000	100,000	200	300
100,000	125,000	215	320
125,000	150,000	225	340
150,000	175,000	240	360
175,000	200,000	250	375
200,000	300,000	300	450
300,000	400,000	350	525
400,000	500,000	400	600
500,000	1,000,000	500	800
1,000,000	AND UP	NOTE 2	NOTE 3

NOTES:

1. Distances are not reduced due to the presence of barricades.
2. Use $D = 5\sqrt[3]{W}$
3. Use $D = 8\sqrt[3]{W}$
4. For weights not shown, use the formulas in table 5-2, note 3.

Table 5-4. Class/Division 1.1 Intraline Distances From Earth-Covered Igloos.

Net Explosives Weight (Lbs)		Distance from Igloo to ES (Feet)		Net Explosives Weight (Lbs)		Distance from Igloo to ES (Feet)	
Over	Not Over	Side	Rear	Over	Not Over	Side	Rear
0	50	60	45	35,000	40,000	545	410
50	100	75	55	40,000	45,000	570	425
100	200	95	70	45,000	50,000	590	440
200	300	105	80	50,000	55,000	610	455
300	400	120	90	55,000	60,000	625	470
400	500	125	95	60,000	65,000	645	480
500	600	135	100	65,000	70,000	660	495
600	700	140	105	70,000	75,000	675	505
700	800	150	100	75,000	80,000	690	520
800	900	155	115	80,000	85,000	705	530
900	1,000	160	120	85,000	90,000	715	540
1,000	1,500	185	135	90,000	95,000	730	545
1,500	2,000	200	150	95,000	100,000	745	555
2,000	3,000	230	175	100,000	125,000	800	605
3,000	4,000	255	190	125,000	150,000	850	650
4,000	5,000	275	205	150,000	175,000	895	700
5,000	6,000	290	220	175,000	200,000	935	745
6,000	7,000	305	230	200,000	225,000	975	795
7,000	8,000	320	240	225,000	250,000	1005	840
8,000	9,000	330	250	250,000	275,000	1040	890
9,000	10,000	345	260	275,000	300,000	1070	935
10,000	15,000	395	295	300,000	325,000	1135	1035
15,000	20,000	435	325	325,000	350,000	1200	1130
20,000	25,000	470	350	350,000	375,000	1265	1230
25,000	30,000	500	370	375,000	400,000	1330	1330
30,000	35,000	525	390	400,000	500,000	1430	1430

NOTES:

1. See Table 5-1, Note 61 for additional information.
2. For front exposures, use K-18 separation.

5-13. Barricades. Properly constructed or natural barricades provide protection against fragments and, in the past, were considered to give enough overpressure protection to allow reduction in some Q-D requirements. Barricades or earth-covered structures will eliminate the risk of propagating explosions caused by low-angle, high-speed fragments. Barricade elevation is effective when a straight line, drawn from a point in a below to a point in b below, passes through the top width of the barricade. A barricade of this elevation should prevent simultaneous propagation of an explosion from one quantity of mass-detonating explosives to another.

a. From:

(1) The top of the side wall of a magazine or operating building;

(2) The top of a stack containing explosives, as in (4) below; or

(3) Explosive items on aircraft or emplaced missiles.

(4) Barricade heights derived from the use of (2) above will be based on the following. A straight line drawn from the top of the far edge of the stack (figure 5-2) (edge away from the barricade) at a 2° angle above the horizontal must pass through the 3 foot width of the crest (berm) of the barricade. Where feasible, barricade heights should be scaled up 3 to 5 feet, based on a line drawn (as explained above) at an angle of 5° above the horizontal. When protecting aircraft, facilities, and personnel at K26 or less, a vertical-sided barricade will provide a reduction in blast overpressure to three or four times the height of the barricade in a horizontal line (for example, a 20-foot barricade would shield a 40-feet-deep building setting 20 feet from the barricade, from low-angle, high-speed fragments and some blast pressure). The slope-sided

barricade has been known to ricochet fragments and is less effective in deflecting blast pressure.

b. To:

(1) The highest point of any IB being protected.

(2) A point 12 feet above the center of any highway or railway being protected.

(3) Explosive items on aircraft or emplaced missiles. However, barricade protection to the highest point on the aircraft or missile launcher may be desirable to reduce direct fragment damage to the aircraft.

(4) The highest point selected for protection on any magazine, operating building, storage site, or other facility or materiel. Where such protected places contain explosives, the highest point chosen must be at least the minimum given in (1), (2), and (3) above.

c. Natural Barricades. Although Q-D criteria may be partially reduced for protected storage facilities built underground, into hills, or separated by hills, each case must be considered separately because of the variables involved. Details must be submitted in the site plans, including topographical maps of the terrain. In addition, separations are considered barricaded when the gross average density of vegetation between the PES and ES is at least 2000 grains per cubic foot. Each instance of vegetation barricading must be presented to HQ AFISC/SEWV, Norton AFB CA 92409-7001, for approval.

d. Artificial Barricades. The earth fill for artificial barricades will be select cohesive material, free from unhealthful organic matter, trash, debris, and frozen material. Any stones should be mostly in the lower center of the barricade, and stones heavier than 10 pounds, or larger than 6 inches, are not allowed. The surface will be compacted and prepared to keep structural integrity and control erosion. Effective artificial barricades are:

(1) Earth, 20 feet or less in height, having a crest (berm) at least 3 feet wide. The slope will not be steeper than 1-1/2 horizontal to 1 vertical. (Newly built facilities should have a slope of 2 horizontal to 1 vertical to reduce erosion and ease maintenance.)

(2) Earth more than 20 feet in height and at least 5 feet wide at the top, with earth sloping as in (1) above.

(3) Earth meeting the requirements of (1) or (2) above, modified by substituting a retaining wall for the slope on one side. The slope and thickness of the retaining wall (preferably of concrete) must ensure a wide enough top so the earth will be held firmly in place.

(4) Earth-filled, steel-bin-type barricades (ARMCO, Republic type, or equal) are acceptable if:

(a) The explosives are at least 10 feet from the wall.

(b) The top of the wall is at least 2 feet higher than the explosives (in addition to the requirements of a and b above).

(c) No more than 5,000 pounds of mass-detonating explosives are placed behind the barricade or in a revetment having the type B, 5-foot, 3-inch (approximate) thick wall.

(d) No more than 30,000 pounds of mass-detonating explosives are placed behind the barricade or in a revetment having the type A, 7-foot (approximate) thick wall.

(e) The quantities under (c) and (d) above are less when possible.

(f) The barricades are to be used with explosives-loaded aircraft, subject to the weight limits in (c) and (d) above. Such barricades will minimize the possibility of explosion propagation to explosives loaded on aircraft in an adjacent connected revetment; however, they will not prevent major damage or destruction of the aircraft. A connected series of such revetments may be sited for the explosives weight in one revetment for determining Q-D separations.

(g) These barricades may also be used to construct holding pads at preload facilities, subject to the weight limits in (c) and (d) above.

(5) Other types of approved obstructions giving protection at least equal to that in (1) through (4) above.

e. Inspection of Barricades. Barricades will be inspected periodically to determine the degree of settling or erosion. If a barricade has deteriorated so it no longer provides effective protection, add fill. Also, inspect wood revetted barricades and replace rotten timbers or planking that weaken them.

f. Siting Barricades. Place barricades as near the potential explosion site or exposed site as practical (figure 5-3). They must not be more than the distance required for operations, walking, or building maintenance. The barricades may be placed either next to the exposed site or the potential explosion site, whichever provides the most effective protection.

g. Magazines as Barricaded Structures:

(1) The earth cover over an igloo magazine must be at least 2 feet deep. Earth cover and side fill requirements are the same as for barricades

in d above. If necessary, use larger stones only in the lower half of fills. Igloo magazines are considered barricaded except for a 60° arc on either side of the centerline of the igloo. If there is a separate barricade (c or d above) in front of the door, then barricade distance applies for all exposures.

(2) An aboveground magazine is considered barricaded when it is protected by a barricade meeting the requirements of c or d above.

(3) A concrete-arch or steel-arch, earth-covered igloo is the preferred type of "barricaded" magazine for storing maximum amounts of class/division 1.1 explosives, with minimum separation between locations.

h. Barricade Value. For facilities sited before 1 June 1980, a distance reduction "credit" is given for some barricades. For newly sited facilities and for some old cases, no credit is given for the following reasons:

(1) Barricades have no effect on high-angle fragments that escape over their top. Some of these fragments may travel to the outer limits of protection areas set up for PTR and IB distances.

(2) Eliminating dangerous low-angle, high-velocity fragments by barricading will considerably reduce fragment density within a given radius. This will not reduce the size of the hazardous circle at distances discussed in (1) above. Thus, no credit is given at the greater distances. Credit is given where nearby exposures are involved, such as intermagazine separations.

(3) Barricades, if properly designed and located, stop fragments. A barricade at the source can reduce fragment speed and density where high-density exposures of personnel and equipment may occur. A secondary barricade at sites of mission-essential equipment and personnel (for example, wing communications, trim pads, etc.) can provide some additional protection; however, high-angle, low-velocity fragments will still impact the exposed site.

(4) Barricades with sloped sides are less effective than those with vertical sides (for example, steel bin barricades at least K1.1 from the source) in reducing blast pressure. However, for sources under 100,000 pounds NEW, either may give overpressure reduction of several psi out to three or four times the height of a barricade. The barricade becomes less effective as the blast wave progresses toward K40, where it is negligible; however, even here it is still effective against low-angle fragments. For quantities greater than 100,000 pounds NEW, the barricade provides some reduction in overpressure out to K15; however, it tends to increase overpressure from K15 to K40. Therefore, use of barricades at sources over 100,000 pounds NEW makes desirable the use of K28 to K36 for PTR distance, instead of K24/30 which is prescribed.

(5) Barricades around the exposed site can be used to reduce minimum separations required by table 5-1 or fragment distances from 1.2 munitions provided tests or engineering analysis shows the barrier will stop the low-angle, high-velocity fragments and the building will provide protection from the high-angle fragments that can be expected from the PES. The distance cannot be reduced below that required to provide adequate overpressure protection to the ES.

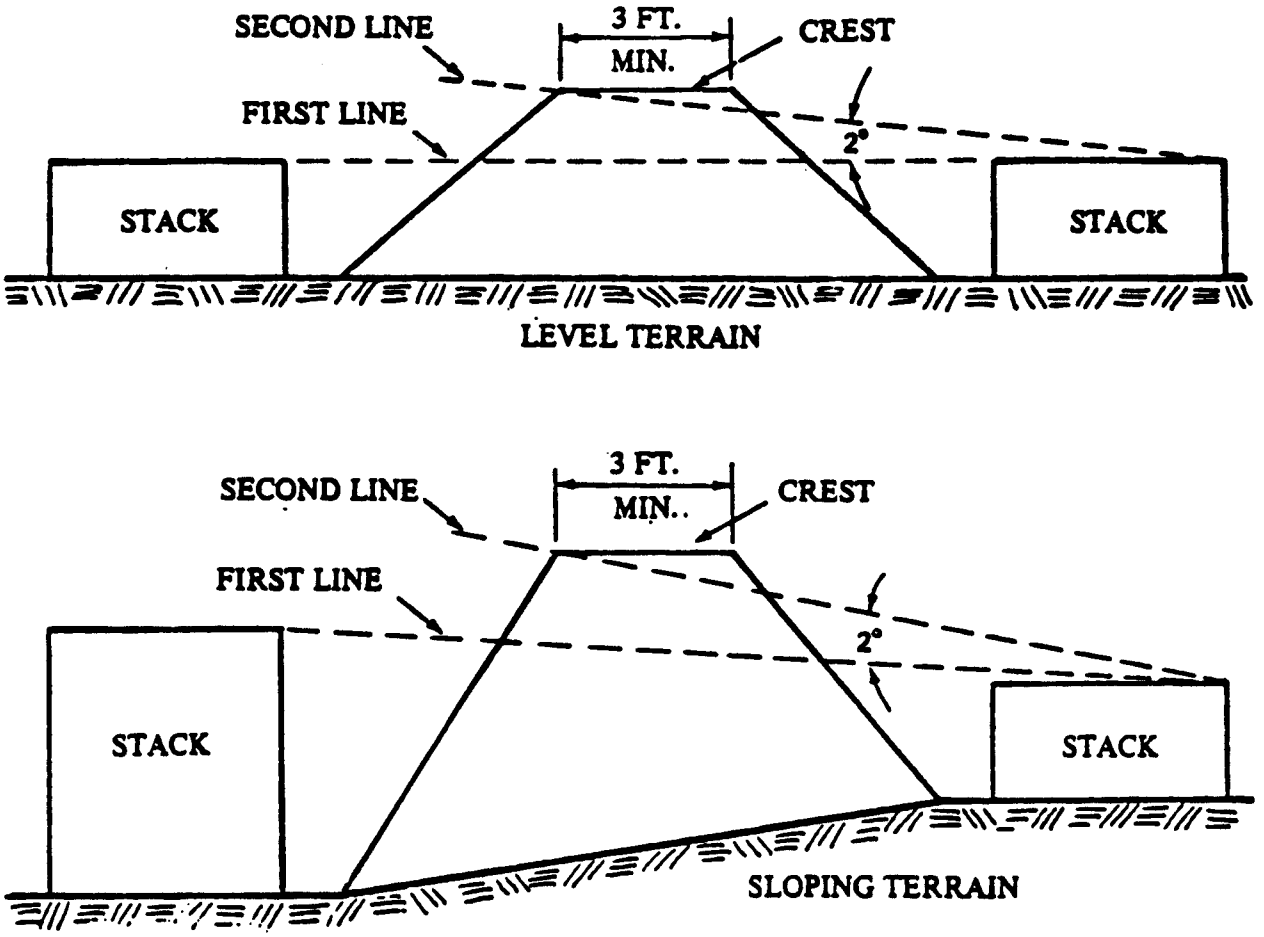

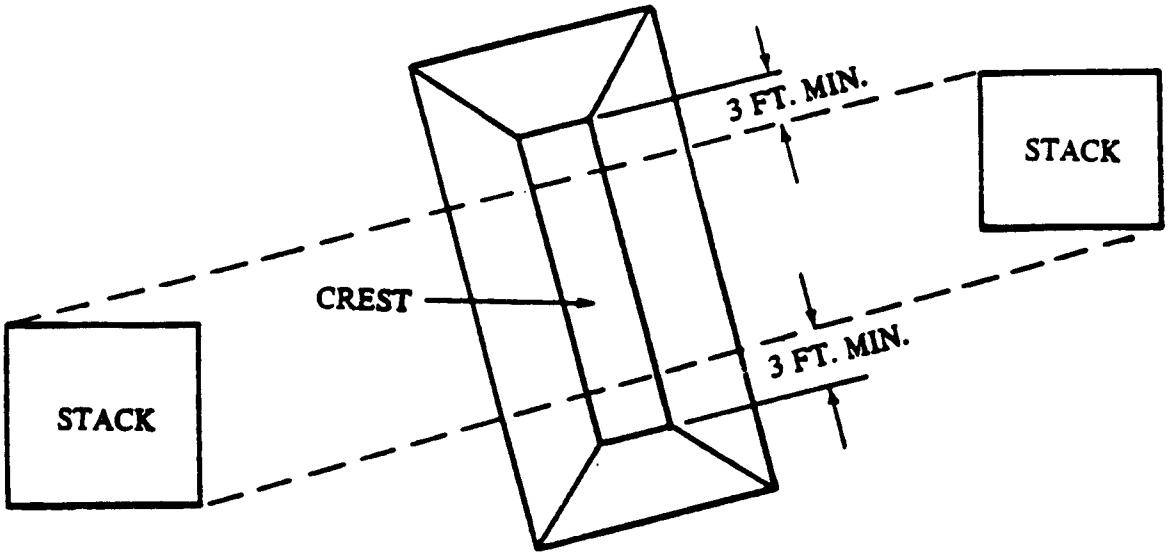

Figure 5-2. Typical Barricade - Stack Relationships.

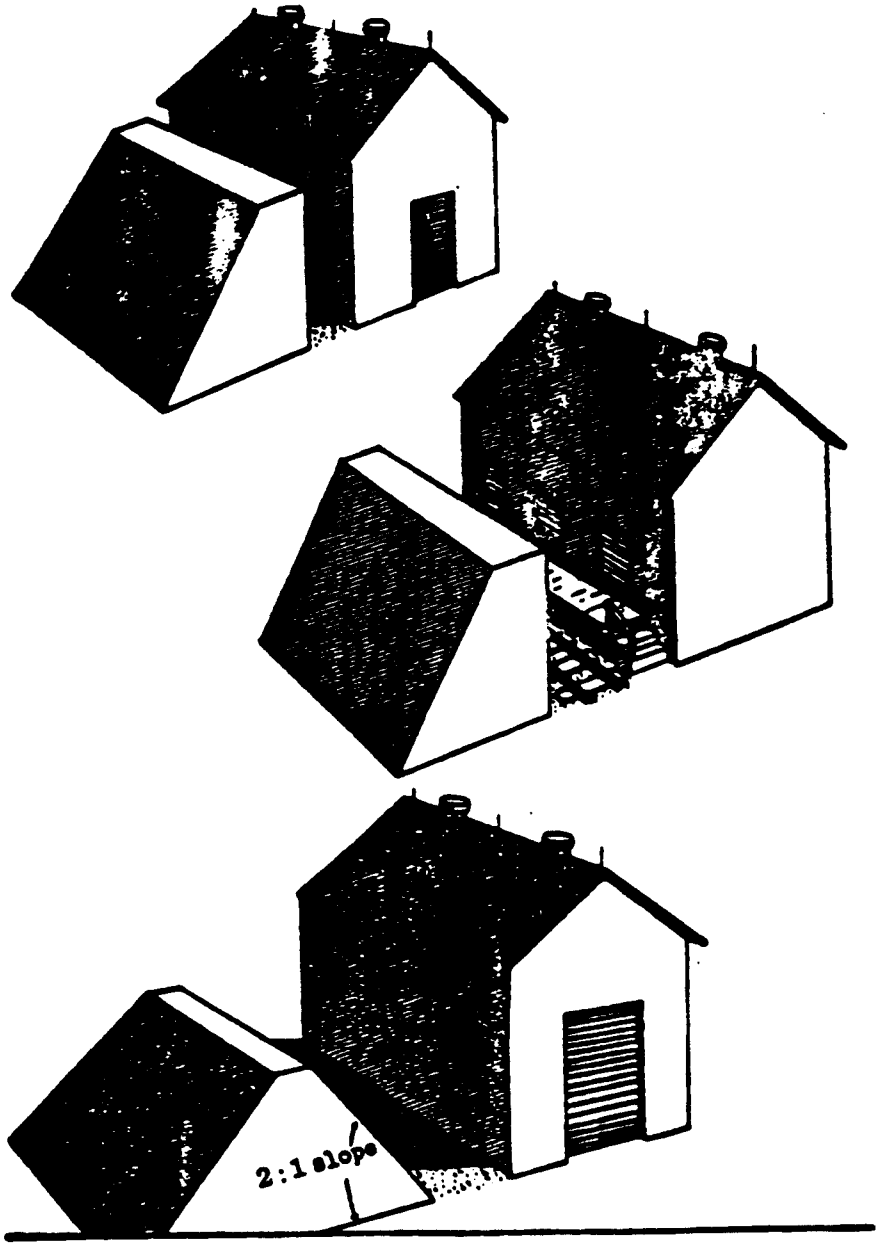

Figure 5-3. Barricade Locations.

Section C—Q-D Criteria For Specific Facilities

5-14. Related Facilities. Certain facilities which directly support a PES are known as related facilities. These facilities are authorized K18 separation from the supported PES, except that no facility housing personnel is allowed within 300 feet of a HAS containing explosives.

a. General Related Facilities. Facilities serving a PES are considered related and will be separated from that PES by the following minimum distances. Greater separations should be provided where possible.

Facility	Separation Required
Gatehouses[3]; small field offices[2], [3]; dunnage preparation; small packing and shipping buildings; dog kennels; area security control (not central security control (CSC); motor pool storage area, or dispatch points (for vehicles supporting storage area only); staffed power plants (only supporting the weapons storage area); maintenance and inspection facilities; response force tactical facilities (RFTF); lunch rooms, breakrooms, and change houses used exclusively by personnel with duties within the PES; utility installations that serve only the PES[5].	Use the "Related Facilities" row of table 5-1.
One-person guard towers[1],[4], unoccupied power plants; electrical interchanges.	50 feet minimum (if fire resistant), 100 feet if not.
Inert and dunnage storage facilities; low pressure boilers; paint storage buildings providing direct support to the PES[6].	50 feet minimum from PES supported.
Guard (sentry) shelters and defensive fighting positions.	None

NOTES:

1. When essential for security purposes, one-person guard towers should be sited at a distance equal to the height of the tower plus 50 feet (fire break distance) from explosives locations. However, the distance must not be less than the minimum given above.

2. Distance given does not apply to office and supply rooms, supporting facility operations, inside specially designed and built operating buildings.

3. Intermagazine separation is authorized from facilities which contain nonmass-detonating explosives. (Table 5-1, columns 15 through 20, as applicable.)

4. One-person security structures for nuclear weapons-loaded aircraft are exempt from separation requirements. However, the distance shown should be provided when possible.

5. Where the unoccupied auxiliary power plant or transformer station serves several buildings and fence lighting in the specific area, they may be at 50 feet if fire resistant or 100 feet if not fire resistant.,Where they serve only one or two buildings, they may be separated by a 2-hour-rated firewall.

6. Some specially designed operating buildings have attached rooms for low-pressure boilers and other facilities. These buildings have safety features such as protective concrete separating walls (without openings) between boiler and working areas, light roof, and frangible exterior walls for boiler enclosures. Such buildings, built according to Air Force definitive drawings, are exempt from these distance criteria. This exception applies only where equipment installed or contained in attached rooms meets or exceeds original specifications and does not create additional hazards.

b. Munitions Maintenance (Munitions Storage Area or Weapons Storage Area)--Related Facilities:

(1) These facilities must not only be separated by K18 from the PES they directly support (for example the munitions storage area office from the storage igloos), but must also be separated from any PES which they do not support, by incremental K40/50 from class/division 1.1 explosives.

(2) Munitions maintenance facilities may be sited at related facility separation from those explosives-loaded aircraft that they support.

(3) There is generally only one storage area for munitions on an installation; therefore, where more than one unit operates within a single munitions storage area, related facility distances may be used from any unit's explosives locations to any unit's related facilities.

c. Direct Combat Aircraft Generation--Related Facilities. These are nonexplosives facilities which directly support the servicing, launching, and flying of a unit's combat config-

ured aircraft. They include activities and their operating facilities that prepare and handle munitions and explosives for and on the flightline; prepare, service, and maintain combat aircraft; and those who direct and perform flying operations. (A unit may be a squadron, wing or group; or any combination thereof, including additive and/or contingency forces. For Q-D purposes, all combat forces at a single location are a unit and may include Air Force, Navy, host nation, and Army aircraft.) One set of Q-D criteria apply to all combat forces at a single location.

(1) Separation of two or more units with different missions by IB distance is required for preservation of individual mission capabilities and resources. (For example, a rescue mission and it's personnel, equipment, and facilities should not be hazarded by an explosives-loaded combat aircraft even though the rescue aircraft may be considered as combat aircraft.) The responsible local commanders must agree on the degree of hazard they are willing to accept from and to each unit's combat resources. Separation between explosives locations of different units is according to table 5-1.

(2) Unhardened combat aircraft generation-related facilities (shops, offices, breakroom, etc.) must be separated from unrelated PESs (munitions storage and operating facilities) by incremental K40/50. If these functions are located in HASs, the separations from these unrelated PESs may be reduced to K30 to the frontal cone and K9 or K18 (table 5-1, note 6) to the sides or rear. Other hardened facilities may be sited at less than K40/50, dependent on the design of the facility and the hazards of the PES, if analysis shows that equivalent protection is provided. (See paragraph 5-12 for examples.)

(3) The primary test to be applied in determining related facilities is that the function must provide essential daily and direct support for the PES which presents the hazard. To determine if a facility is truly related and can be sited at K18, the following statements must all be applicable:

(a) Yes. The function is critical to the generation and launching of combat aircraft.

(b) Yes. If the facility or function was sited at K40/50, the ability to generate or launch combat aircraft would be adversely affected.

(c) Yes. If the function were broken into subfunctions and separated, the ability to generate or launch combat aircraft would be adversely affected.

(4) Examples of facilities and functions that are generally considered to be related to combat aircraft generation include:

(a) Directorate of Maintenance functions.

(b) Directorate of Operations functions.

(c) POL and LOX servicing facilities, including hot pit refueling areas (paragraph 8-7).

(d) Civil engineering functions that are dedicated to the maintenance of the runway and taxiways.

(e) Forward supply points.

(f) Intelligence, debriefing, and flightline security functions.

d. Cargo Aircraft Separations. Explosives-loaded cargo aircraft are considered the same as aboveground magazines. Munitions maintenance activities are considered related to these aircraft. Because cargo aircraft are not considered to be combat aircraft, the provisions of c above do not apply. Support facilities for cargo aircraft do not provide essential and direct support to the combat mission of the base and thus must be separated by IB distance from munitions storage structures and combat aircraft parking areas. Cargo aircraft support facilities must be separated from the explosives-loaded aircraft parking areas by K40/50, except facilities specifically built to support the hot cargo pad, which may be located at K18 separation.

e. Other Required Separations. All of the functions below support the people involved in operating a PES (combat aircraft); however, their function is neither direct nor essential to the actual activities of the PES.

(1) The following facilities are not considered "related" to any potential explosion site:

(a) MWR facilities, except those which are for exclusive use by flightline personnel.

(b) Base civil engineering headquarters.

(c) Central base supply.

(d) Family housing, passenger terminals, and chapels.

(e) Military billets, including permanent party dormitories, transient quarters, and other temporary billeting facilities, such as tent cities.

(f) Commissaries, schools, and nurseries.

(g) Wing and base headquarters, comptroller functions.

(h) Hospitals and dispensaries.

(i) Theaters.

(j) Main exchanges, except for flightline annexes.

(k) Base fire department, except for flightline fire stations.

(l) Law enforcement.

(2) When two distinct missions (such as aircraft and strategic missiles) are located on one installation, the facilities supporting one mission (missiles) must be separated by IB distance from the PESs of the other mission (aircraft). However, the collocated storage area facilities are related as described in b above.

(3) Other facilities and operations requiring separation from explosives locations are shown below:

Facilities and Operations	Paragraph Reference
Paint and other flammable materials; internal combustion engines; combustible material	3-6
Water storage for firefighting	3-8
The Base Boundary	5-3a
EOD facilities	5-3a
Military training areas	5-3b
Ground Control Approach Facility	5-3b
Rocket storage, checkout and assembly building	5-15
Loading docks	5-16
Vehicle parking areas	5-18
Warehouses	5-19
Interservice explosives facilities	5-20
Aircraft shelters	5-21
Modules (austere areas)	5-22
Emergency storage of munitions	5-23
Airfields and explosives-loaded aircraft	5-24
POL facilities	5-25
Peacekeeper facilities	12-4
Minuteman facilities	12-3
Mineral exploration and extraction	5-26
Electrical Lines	6-4
Vehicle inspection stations; interchange yards; suspect vehicle sites; holding yards	7-20
Railroad inspection stations; suspect car sites; interchange yards, holding yards; classification yards; piggyback rail sites	7-22
Arm and dearm areas	8-7
Hot pit refueling areas	8-7
Disposal ranges	8-44
Aircraft battle damage repair sites	8-48
Foreign government sources	11-10

5-15. Rocket Storage, Checkout, and Assembly (RSCA) Building:

a. The RSCA building, Air Force Definitive Drawing 33-39-03, is an explosives operating building, originally built on or near the flightline for on-line support of 2.75-inch rockets and AIM-4 missiles. Use of the RSCA building is limited to storage and maintenance of the explosive items shown in table 5-5.

b. Normal IB and PTR distances are not applicable when the provisions listed in c below are followed. Use table 5-5 instead. For separations to other explosives facilities (for example, combat aircraft, ready explosives facilities, etc.), use the applicable "operating location" column of table 5-1. If the RSCA building is used solely for ready storage, separation to combat aircraft generation-related facilities will be according to paragraph 5-14c. When the RSCA building is used for explosives maintenance operations or component storage, combat aircraft generation-related facilities must be separated by table 5-5 IB distance.

c. RSCA Building Requirements. The RSCA building will:

(1) Have an all-weather access road.

(2) Meet airfield clearance criteria in AFR 86-14.

(3) Not be located in the explosives prohibited area.

(4) Meet the following minimum fire clearance distances to uninhabited facilities.

(a) Buildings of noncombustible construction or underground pipelines--50 feet.

(b) Buildings of combustible construction--100 feet.

(c) Aboveground storage of POL and other flammable or hazardous oxidizers or fuels--500 feet. (See paragraph 5-25d for quantities less than 500 gallons.)

(5) All rockets and missiles should be stored with their nose ends pointing to a 12-inch reinforced concrete wall.

(6) Doors in munitions storage and operating bays must be constructed of 3/8-inch-steel plating.

d. Either complete rounds or components may be stored, if siting and storage configuration requirements are met.

e. Table 5-5 distances may also be used for buildings of construction substantially equal to the RSCA building. The siting requirements and storage configurations must be the same.

f. If the RSCA is to be used as an explosives facility for items other than those shown in table 5-5, normal operating location separation criteria will apply. Example: When an AUR container with four AIM-7 missiles with WAU-17 warheads is in the bay, 1250-foot-IB separations are required.

Table 5-5. RSCA Building Separation Distances.

LINE NO.	ITEM	REQUIRED SEPARATION		STORAGE CONFIGURATION REQUIREMENTS
		IB	PTR	
1	Class/Division 1.4 Explosives	None	None	
2	Class/Division 1.3 Explosives	None	None	Maximum of 100 lbs per bay. For larger quantities, normal Q-D applies.
3	Class/Division (04) 1.2 Explosives	None	None	Maximum of 50 lbs per bay. For larger quantities, normal Q-D applies.
4	2.75-inch Rockets	None	None	Maintain a 4-inch parallel and vertical separation (not applicable to practice rockets). Store in racks.
5	AIM-4 Series Missiles	None	None	Stored in storage containers.
6	AIM-7 Series Missiles (except with WAU-17/B Warhead)	300'	180'	Separated according to paragraphs 12-6b and e.
7	AIM-7M Missiles with WAU-17/B Warhead	670'	400'	Maximum of 3 warheads in radial alignment/bay. (Max effective NEW-105 lbs) See also paragraph 12-6c.
8	AIM-9 Series Missiles	300'	180'	Separated according to paragraph 12-6d.
		None	None	Stored in concrete pipes with the nose end towards a 12-inch concrete wall.
9	ACM-65 Missiles	400'	240'	Separated according to paragraph 12-6f.
		300'	300'	Two or more missiles preloaded on launchers and separated according to paragraph 12-6f.
10a	Class/Division 1.1 Explosives	670'	400'	Maximum of 100 lbs per bay.
10b		300'	180'	Maximum of 25 lbs per bay.

5-16. Loading Docks. Explosives loading docks are considered the same as aboveground magazines for Q-D purposes. Separation for the class/division of explosives and the exposures involved are required.

a. The separation distance required between loading docks and the nearest explosives storage magazine is intermagazine distance. If explosives loading docks are used as part of an operating line, intraline distance applies.

b. When a loading dock is an integral part of an explosives facility, explosives on the dock will be counted as part of the explosives content of the facility. Items should not be left on the dock overnight.

c. Loading or unloading docks are considered IBs when used for general activities, such as handling cargo or supplies unrelated to explosives functions.

5-17. Rail Cars or Vehicles Spotted at Operating Buildings. Rail cars and vehicles should not be used as service magazines for operating buildings or locations. If such use is essential, they must be parked at intraline distance from the operation or operating building.

5-18. Vehicle Parking Areas:

a. Parking areas for government motor vehicles, handling equipment, etc., should be located at no less than intraline distance from explosives locations within the storage area. This separation also applies to dispatch points exclusively serving the storage area. Government

motor vehicle parking areas will be located at least 100 feet from explosives locations. Temporary vehicle parking will be according to e below. (Other motor pools normally require IB separations because of office, workshops, and such.)

b. Parking areas for privately owned vehicles (POV) belonging to personnel employed in the munitions storage area should be located outside the storage area and must be at least 100 feet or intraline distance, whichever is greater, from explosives locations. Parking areas for POVs belonging to personnel employed at other type PESs must be located at least 100 feet or intraline distance, whichever is greater, from the PES.

c. In those limited situations when a parking lot supports only one PES, such as near a maintenance and inspection building, and is used exclusively by personnel at the PES, K-18 is not required. However, the parking lot must be 100 feet from the supported PES and K-18 from all other PESs.

d. Parking areas for all other POVs must be located outside munitions storage areas and must be at least PTR distance from explosives locations.

e. Temporary parking of government vehicles, other than those being loaded or unloaded, will not be parked closer than 25 feet to any explosives facility within an explosives storage area or sited explosives facility outside the storage area.

f. Parking areas used exclusively for war reserve material (WRM) vehicles and other WRM resources may be sited at intraline distances from explosives locations. PTR or IB separation distances should be used, when possible, to prevent unacceptable damage to critical war support vehicles and equipment.

5-19. Warehouses. These are facilities for storing material and supplies not related to explosives operations where personnel are infrequently present. As a minimum, these facilities will be separated from explosives locations by the applicable unbarricaded, intermagazine distance. When the warehouse is used for important WRM, intraline separation, as a minimum, must be used from explosives locations. Separation by PTR or IB distance should be used, when possible, to further limit damage or loss of assets in storage.

5-20. Interservice Explosives Facilities. The following rules apply to separations between US Air Force facilities and facilities of other US and foreign military services:

a. Between US Air Force explosives storage locations and explosives storage locations of another service, use the applicable intermagazine separation as though both facilities were US Air Force-owned.

b. Between explosives storage or operating locations of one service and explosives operating locations of the other service, use IB separation. When operations in each facility present a similar degree of hazard or for joint or support operations, this separation may be reduced to intraline separation.

c. Between explosives storage and operating locations of one service and explosives tactical facilities of another service (for example, missile launch facilities, alert aircraft parking area, fixed gun position), use IB distance. For joint or support operations, use the applicable separation as though both facilities were US Air Force-owned.

d. Between US Air Force and another service's explosives tactical facilities, use the applicable separation as though both facilities were US Air Force-owned.

e. To ensure a mutually acceptable degree of safety, coordinate with the non-US Air Force unit on the required separation distance. When the services disagree on the required safety distance, forward the problem through channels to HQ AFISC/SEWV, Norton AFB CA 92409-7001, for action.

5-21. HASs and Flowthrough Revetments:

a. Tables 5-6 and 5-7 show intershelter separation requirements that provide different levels of protection to meet different levels of risk. Table 5-1 shows separation requirements to other facilities.

(1) The separations shown in table 5-6 provide reasonable assurance that aircraft in closed, hardened shelters will remain operable should an explosion occur in an adjacent shelter or ready service storage facility. These aircraft may not be immediately removable due to debris. For shelters with third generation-type rear doors, the aircraft may be damaged substantially unless modifications have been made to prevent the rear doors from being blown against the aircraft.

(2) The separations shown in table 5-7 provide reasonable assurance that an explosion in one shelter or ready service facility will not propagate immediately to adjacent shelters, aircraft, or ready service facilities. However, these adjacent structures, aircraft, and stored munitions may be substantially damaged or destroyed. This is equivalent protection to that provided unsheltered aircraft separated by intermagazine distance (K6 or K11).

(3) Table 5-6 will be used in siting of new first, second, and third generation shelters. Existing first, second, and third generation shelters used to store munitions in peacetime will be separated from other shelters and ready service facilities according to table 5-6, unless the MAJCOM commander approves the use of the separations in table 5-7. This approval must be based on compelling mission or readiness requirements and must acknowledge the probable loss of adjacent aircraft in a peacetime mishap. Table 5-7 will be used to separate Korean TAB VEE and Flow-Through shelters and ready service facilities from other shelters and ready service facilities. The MAJCOM may establish procedures to allow use of the lesser separations in table 5-7 to first, second, and third generation shelters during periods of increased readiness or during operational readiness exercises.

b. The strength of construction of aircraft shelters varies from design to design. These variations have been evaluated and considered in establishing separation requirements. To ensure uniform reference to HAS types, the following definitions are provided:

(1) USAFE TAB VEE--24-foot radius semicircular arch, 48 feet wide by 100.8 feet long, front closure prow shaped, vertically hinged, recessed door.

(2) TAB VEE Modified--24-foot radius semicircular arch, 48 feet wide by 100.8 feet long, front closure prow shaped, laterally opening, external flush door.

(3) Second Generation--29.4-foot double-radius, pseudoelliptical arch, 82 feet wide by 124 feet long, vertical reinforced concrete panel, laterally opening, sliding, external flush door.

(4) Third Generation--27.4-foot double-radius, pseudoelliptical arch, 70.8 feet wide by 120 feet long, vertical reinforced concrete panel, laterally opening, sliding, external flush door. Personnel door at one side with barricade.

(5) Korean TAB VEE--24-foot radius semicircular arch, 48 feet wide by 100.8 feet long, open front. Exhaust port in rear wall protected only by a blast deflector barricade (otherwise identical to USAFE TAB VEE). When hardened doors are installed, consider these shelters as TAB VEE Modified.

(6) Korean Flow-Through--Constructed from third generation drawing but omits front door, back wall, and personnel door, 70.8 feet wide by 120 feet long, 27.4-foot double-radius, pseudoelliptical arch.

(7) Steel Bin (ARMCO) Flowthrough Revetment--Constructed using steel bin-type earth-filled barricades (paragraph 5-13d(4)). Spaced to clear aircraft wingspan while taxiing. Alternate space may be used for ready storage of quick-turn loads on trailers and aerospace ground equipment (AGE). Therefore, four parallel barricades can provide flowthrough protection for two aircraft with a central ready storage for munitions and AGE for both aircraft.

(8) Steel Bin (ARMCO) Aircraft Revetment--Same as (7) above, except rear is also barricaded.

c. The following criteria apply to the listed munitions when loaded on sheltered aircraft or stored as additional loads in shelters. See also chapter 12 for ways to limit the MCE of weapons in shelters.

(1) Twenty- and thirty-millimeter (mm) ammunition is exempt from Q-D requirements.

(2) Class/division 1.2 (except (18) 1.2), 1.3, and 1.4 munitions are exempt from Q-D requirements if the shelter doors remain closed. With the doors open, only the frontal separation required by table 5-1 applies.

(3) For 110 pounds (50kg) NEW or less of class/division 1.1 munitions, only the frontal separation required by table 5-1 applies, except the 300-foot-minimum separation is not required.

(4) AIM-7, AIM-9, and AGM-65 missiles meeting the missile-to-missile separation requirements of paragraph 12-6 may use the separations in table 5-8. For, the AIM-7M with the WAU-17/B warhead, table 5-8 may be used if no more than three warheads are in radial alignment. Twenty- and thirty-mm ammunition may also be stored with the above missiles.

(5) Additional AIM-7 and AIM-9 missiles and 20- and 30-mm ammunition may be prepositioned in shelters, provided they do not interfere with normal operations within the shelter. Shelter operations should be adjusted to ensure protection of additional items.

d. Where existing shelters are constructed so their sides abut other shelters, the loaded air-

craft and/or the stored munitions in adjacent shelters must be separated by at least K1.25 (munition to munition).

e. The side walls of the arch provide a shotgun effect which projects most hazardous fragments in a 30° cone. This cone applies to the front of a HAS as a PES only. Use figure 5-1 to determine HAS exposure boundaries.

f. Ready service storage facilities are intended to provide a holding area between shelters for quick-turn munitions. A maximum of two quick-turn loads per shelter, not to exceed 10,000 pounds NEW, may be stored in these facilities. In addition, ready service igloos are limited to a loading density of not more than 0.6 pounds NEW stored per cubic feet of interior volume. Use the separations listed in table 5-6 or 5-7, as appropriate, to separate ready service storage facilities from aircraft shelters.

Table 5-6. Intershelter Separation Criteria for Aircraft Survival.

FROM → PES / TO ↓ ES		TAB VEE or TAB VEE Modified			2nd or 3rd Generation Aircraft Shelter			Ready Service Igloo				Ready Service Magazine		Ready Service Module
		Side	Rear	Front	Side	Rear	Front	Side	Rear	Front, Barricaded	Front, Unbarricaded	Barricaded	Unbarricaded	Barricaded
TAB VEE, TAB VEE/ Modified (1st Generation Aircraft Shelter)	Side	K9	K6	K9	K9	K6	K9	K2.75	K2.75	K8	K8	K8	K8	K8
	Rear	K6	K5	K6	K6	K5	K6	K2.75	K2.75	K8	K8	K8	K8	K8
	Front	K18	K18	K18	K18	K18	K18	K11	K9	K18	K18	K18	K18	K18
2nd/3rd Generation Aircraft Shelter	Side	K9	K8	K9	K9	K8	K9	K2.75	K2.75	K8	K8	K8	K8	K8
	Rear	K8	K5	K8	K8	K5	K8	K2.75	K2.75	K8	K8	K8	K8	K8
	Front	K11	K9	K18	K11	K9	K18	K2.75	K2.75	K8	K8	K8	K8	K8

Table 6-7. Intershelter Separation Criteria to Prevent Immediate Propagation.

TO ↓ / FROM → (ES / PES)		TAB VEE or TAB VEE Modified (1st Generation Aircraft Shelter)			2nd or 3rd Generation Aircraft Shelter			Korean TAB VEE			Korean Flow Through		Ready Service Igloo				Ready Service Magazine		Ready Service Module
		Side	Rear	Front	Side	Rear	Front	Side	Rear	Front	Side	Front & Rear	Side	Rear	Front, Barricaded	Front, Unbarricaded	Barricaded	Unbarricaded	Barricaded
TAB VEE, TAB VEE/ Modified	Side	K2	K2	K2.75	K2	K2	K2.75	K2	K2	K4.5	K2	K4.5	K1.25[2]	K1.25[2]	K2.75[3]	K2.75[3]	K2.75	K2.75	K2.75
	Rear	K2	K2	K2.75	K2	K2	K2.75	K2	K2	K4.5	K2	K4.5	K1.25[2]	K1.25[2]	K2.75[3]	K2.75[3]	K2.75	K2.75	K2.75
	Front	K6	K4.5	K9	K6	K4.5	K9	K6	K4.5	K9	K6	K9	K2.75[3]	K2.75[3]	K6[3]	K9[3]	K6	K9	K6
2nd/3rd Generation Aircraft Shelter	Side	K2	K2	K2.75	K2	K2	K2.75	K2	K2	K4.5	K2	K4.5	K1.25[2]	K1.25[2]	K2.75[3]	K2.75[3]	K2.75	K2.75	K2.75
	Rear	K2	K2	K2.75	K2	K2	K2.75	K2	K2	K4.5	K2	K4.5	K1.25[2]	K1.25[2]	K2.75[3]	K2.75[3]	K2.75	K2.75	K2.75
	Front	K4.5	K2.75	K6	K4.5	K2.75	K6	K4.5	K2.75	K4.5	K4.5	K4.5	K1.25[2]	K1.25[2]	K2.75[3]	K2.75[3]	K2.75	K2.75	K2.75
Korean TAB VEE	Side	K2	K2	K2.75	K2	K2	K2.75	K2	K2	K4.5	K2	K4.5	K1.25[2]	K1.25[2]	K2.75[3]	K2.75[3]	K2.75	K2.75	K2.75
	Rear	K2	K2	K2.75	K2	K2	K2.75	K2	K2	K4.5	K2	K4.5	K1.25[2]	K1.25[2]	K2.75[3]	K2.75[3]	K2.75	K2.75	K2.75
	Front	K11	K11	K11	K11	K11	K11	K11	K11	1200'	K11	1200'	K6[3]	K6[3]	K6[3]	K11[3]	K6	K11	K6
Korean Flow Through	Side	K2	K2	K2.75	K2	K2	K2.75	K2	K2	K4.5	K2	K4.5	K1.25[2]	K1.25[2]	K2.75[3]	K2.75[3]	K2.75	K2.75	K2.75
	Front/ Rear	K11	K11	K11	K11	K11	K11	K11	K11	1200'	K11	1200'	K6[3]	K6[3]	K6[3]	K11[3]	K6	K11	K6
Ready Service Igloo	Side	K2	K2	K2.75	K2	K2	K2.75	K2	K2	K2.75	K2	K2.75	K1.25[2]	K1.25[2]	K2.75[3]	K2.75[3]	K4	K4	K1.25
	Rear	K2	K2	K2.75	K2	K2	K2.75	K2	K2	K2.75	K2	K2.75	K1.25[2]	K1.25[2]	K2[3]	K2[3]	K4	K4	K1.25
	Front, Barricaded	K2.75	K2.75	K6	K2.75	K2.75	K6	K2.75	K2.75	K6	K2.75	K6	K2.75[3]	K2[3]	K6[3]	K6[3]	K6	K6	K6
	Front, Unbarricaded	K6	K4.5	K9	K6	K4.5	K9	K6	K4.5	K9	K6	K9	K2.75[3]	K2[3]	K6[3]	K11[3]	K6	K11	K6
Ready Service Magazine	Barricaded	K6	K6	K6	K6	K6	K6	K6	K6	K6	K6	K6	K4.5[1, 3]	K4.5[1, 3]	K6[1, 3]	K6[1, 3]	K6[1]	K6[1]	K6[1]
	Unbarricaded	K11	K11	K11	K11	K11	K11	K11	K11	1200'	K11	1200'	K6[1, 3]	K6[1, 3]	K6[1, 3]	K11[3]	K6[1]	K11	K6[1]
Ready Service Module	Barricaded	K6[1]	K4.5[1]	K6	K6[1]	K4.5[1]	K6	K6[1]	K6[1]	K6	K6[1]	K6	K1.25[3]	K1.25[3]	K6[1, 3]	K6[1, 3]	K6[1]	K6[1]	K1.1

Table 5-7. Continued.

NOTES:

1. Separation may be reduced to K2 subject to MAJCOM approval. See table 5-1, note 31.

2. Use K2.75 if the loading density of the igloo exceeds 0.6 pounds NEW per cubic foot of interior volume. The maximum NEW limit of 10,000 pounds must not be exceeded.

3. The separation shown may be used regardless of loading density. The maximum NEW limit of 10,000 pounds must not be exceeded.

Table 5-8. Separation Distances for Missiles in Aircraft Shelters.

TYPE OF AIRCRAFT SHELTER		INTRALINE/RELATED FACILITY DISTANCE (FEET)				PUBLIC TRAFFIC ROUTE DISTANCE (FEET)				INHABITED BUILDING DISTANCE (FEET)[7]			
		AIM-7	AIM-9	AGM-65		AIM-7	AIM-9	AGM-65		AIM-7	AIM-9	AGM-65	
				1/ Launcher	2 or 3/ Launcher			1/ Launcher	2 or 3/ Launcher			1/ Launcher	2 or 3/ Launcher
TAB VEE, TAB VEE/Modified (1st Generation Aircraft Shelter)	Front	50[1]	40[1]	80[1]	300[2]	80[4]	86[4]	240[4]	300[4]	150[8]	110[8]	400[5]	500[5]
	Side	0	0	0	300[2]	0	0	185[4]	300[2]	0	0	275[6]	395[3]
	Rear	0	0	0	300[2]	0	0	105[4]	300[2]	0	0	175[6]	300[2]
2nd and 3rd Generation Aircraft Shelter	Front	50[1]	40[1]	80[1]	300[2]	80[4]	86[4]	240[4]	300[4]	150[8]	110[8]	400[5]	500[5]
	Side	0	0	0	300[2]	0	0	185[4]	300[2]	0	0	275[6]	395[3]
	Rear	0	0	0	300[2]	0	0	105[4]	300[2]	0	0	175[6]	300[2]
ARMCO Steel Revetment	Front	50[1]	40[1]	80[1]	300[2]	420[4]	240[4]	240[4]	300[4]	700[5]	400[5]	400[5]	500[5]
	Side & Rear	0	0	80[1]	300[2]	0	0	240[4]	300[4]	0	0	400[5]	500[5]
ARMCO Steel Flow Through	Front & Rear	50[1]	40[1]	80[1]	300[2]	420[4]	240[4]	240[4]	300[4]	700[5]	400[5]	400[5]	500[5]
	Side	0	0	80[1]	300[2]	0	0	240[4]	300[4]	0	0	400[5]	500[5]
Korean Flow Through	Front & Rear	50[1]	40[1]	80[1]	300[2]	420[4]	240[4]	240[4]	300[4]	700[5]	400[5]	400[5]	500[5]
	Side	0	0	0	300[2]	0	0	185[4]	300[4]	0	0	275[6]	395[3]

NOTES:

1. Based on K18 for the NEW of one missile.
2. Based on minimum HAS fragment distance.
3. Based on K62 for NEW of 3 missiles/launcher. For 2/launcher, use 346'.
4. Based on 60% of 1B distance.
5. Based on minimum fragment distance.
6. Based on K62 from the side or K40 from the rear.
7. Also applies to other facilities or locations requiring 1B separation.
8. Based on K50 for the NEW of one missile. For AIM-7M with WAU-17B warhead, use 188' for a single warhead (no radial alignment), 208' for 2 warheads in radial alignment, and 236' for 3 warheads in radial alignment.

5-22. Munitions in Austere Areas:

a. Applicability. The following "austere area" provisions for explosives storage areas are authorized for use in the following areas:

(1) All zones where hostilities exist.

(2) All areas approved by PACAF and USAFE where arrangement under paragraph 1-4 will allow their application.

(3) All "bare bases" and "limited bases."

(4) Other areas as approved by HQ AFISC/SEWV.

b. General Information. Normal explosives safety standards, procedures, Q-D criteria, and methods of application in this regulation apply, except as authorized below. These exceptions are alternatives to normal criteria and may be used if needed. Minimum separations are expected to prevent simultaneous detonation of

explosives on opposite sides of an approved barricade and minimize the possibility of later, nonsimultaneous propagating explosions. Greater separations should be used where possible.

c. Concept for Munitions Storage in Austere Areas:

(1) Open storage may be used. Give priority for cover to items requiring protection from the elements, considering their packing.

(2) Single stacks of large quantities of mass-detonating explosives must be avoided. Smaller stacks may limit losses due to accident or enemy action and often result in decreased land area requirements by reducing the distance required between the explosives storage area and "outside" exposures, such as flightline areas, IBs, or POL storage.

(3) When normal aboveground magazine separation is not feasible, use the modular concept of barricaded open storage described in d below. Large quantities of explosives may be stored in this manner with relative safety.

(4) If land is scarce and covered storage is required, consider the use of approved steel arch, earth-mounded igloos (either standard types as in paragraph 4-16b or austere field types shown in Air Force Definitive Drawing AD-33-15-72). These sectionalized, corrugated-arch structures allow storage of maximum amounts of mass-detonating explosives with minimum space between igloos. They are available in any practical length in widths up to 30 feet. The common earth cover gives acceptable protection against propagation of an explosion from one igloo to another.

(5) Triservice or joint use storage facilities may be sited under the standard criteria. See paragraphs 1-6 and 5-20. However, if operational requirements prescribe, austere area criteria apply to any part of the facility falling directly under Air Force control.

d. Module Description and Siting Criteria:

(1) A module is a barricaded area (figure 5-4) composed of a single separate or several connected hard-surfaced cells, separated from one another by a barricade. These pads are normally without cover. A light, shed-type metal roof or comparable structure may be used to cover individual cells. Heavy structures or flammable material will not be used. All barricades must comply with paragraph 5-13a, b, and d(1) and (2). Paragraph 5-13d(3) and (4) do not apply to modules.

(a) Module barricades must comply with the 2° rule in paragraphs 5-13a and b. Where possible, use of a 5° angle instead of 2° angle is recommended.

(b) Natural barriers should be used as much as possible in siting these modules. To substitute completely for a given part of the module barricade, natural barriers must give protection at least equal to that of a barricade.

(2) Cell storage pad size should accommodate stocks. Storage pads should be hard surfaced to minimize the effects of earth shock from an explosion. There is no restriction on the arrangement of cells within a module or groups of modules, except that cell openings must not face each other. The latter restriction does not apply if they are barricaded or meet the standard Q-D criteria for unbarricaded aboveground magazines.

(3) Within each cell, the NEW must not exceed the limits shown in paragraph 5-11b. Module separation requirements are shown in table 5-1.

e. Module Use. The items which may be stored in modules are limited to high-explosive bombs, similar cased class/division 1.1 ammunition, CBU munitions in authorized nonflammable containers, and 20- and 30-mm ammunition packaged in metal or other nonflammable containers.

(1) Within a module, stocks should normally be limited to one type of munition. Within a cell, mixed storage of high-explosive bombs and CBUs present an extreme fragment hazard and should be avoided unless essential. However, to reduce the Maximum Credible Event (MCE) expected from an explosion in one cell, "buffered" storage arrangements may be used as described in chapter 12.

(2) Nonmass-detonating CBUs and 20- and 30-mm ammunition, when stored in barricaded facilities, are exempt from meeting the 2° requirement of paragraph 5-13.

f. Open Storage. Open storage sites, pads, and modules (aboveground magazines), used solely for the storage of nonmass-detonating CBUs in metal containers and/or 20- and 30-mm ammunition in metal containers, may be separated by a minimum distance of 70 feet for a maximum of 500,000 pounds NEW at each location. All other normal Q-D requirements (IB, PTR, intraline, and airfield areas) apply.

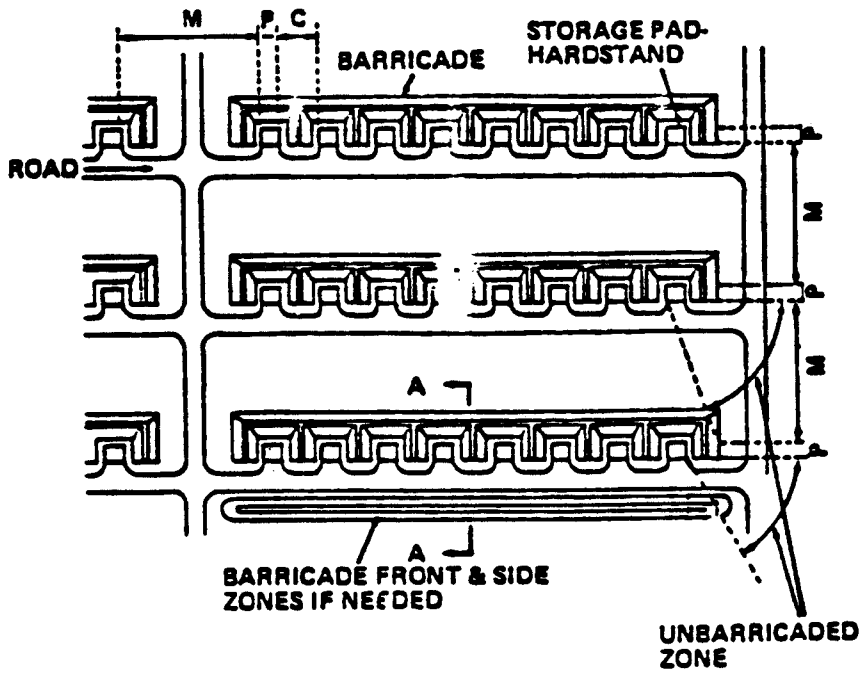

TYPICAL 8 CELL MODULE

NUMBER OF CELLS, CELL EXPLOSIVES WEIGHTS, PAD SIZE (P), AND DISTANCES BETWEEN CELLS (C) AND MODULES (M) VARY.

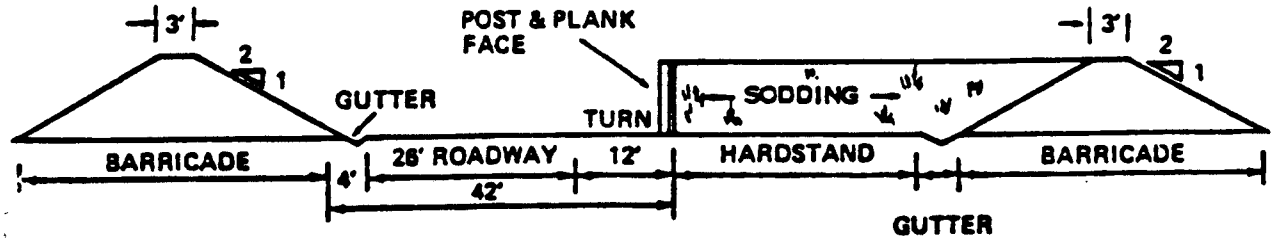

SECTION A-A

BARRICADE HEIGHT ABOVE EXPLOSIVES STACK

Figure 5-4. Barricaded Modules.

5-23. Emergency Explosives Storage and Operations:

a. During combat and certain increased readiness conditions, as determined by the MAJCOM commander, explosives may be stored at reduced Q-Ds and under conditions which do not meet the normal provisions of this regulation. In the event of a mishap, use of these reduced distances, while preventing propagation, will result in extensive damage and serious injury to personnel. Commanders should refer to section E to determine the additional risk to facilities and operations when these reduced distances are used.

b. Off-base and on-base non-US targets will continue to be protected by the normal minimum safety distances established in this regulation unless overseas hosts are willing to accept reduced distances during the emergency.

c. It is essential that preplanning be done by the base and the MAJCOM to control the emergency storage of explosives. Overseas commands should work out emergency agreements with their host countries where possible. Also, units should consider constructing barricaded facilities in those locations where normal Q-D criteria have precluded any explosives storage capacity but which could be used under these emergency conditions. During peacetime, these facilities could be used for storage of inert material or low-hazard munitions. Use of the reduced distances below during peacetime is not permitted.

d. The following on-base emergency storage Q-Ds may be applied during the duration of the emergency situation.

(1) IB distances may be reduced from K40/50 to 45 percent of K40/50, with mission (strategic) essential facilities protected by close-in barricades or incremental K30 without barricades. The minimum distance of 1250 feet need not be applied.

(2) K18 (intraline) distances may be reduced to K9 if barricades are provided.

(3) Unbarricaded intermagazine separation will be maintained to prevent propagation and mass detonation of the munitions assets. Barricaded intermagazine separation may be reduced to K2, unless lesser separation is authorized for peacetime use. This is for storage only and no operations will be conducted at locations separated by K2 as authorized by this paragraph.

(4) For class/division 1.2, intraline and PTR distances may be reduced to the required intermagazine separation. IB exposures may be separated from the PES by PTR distance.

e. This reduced criteria for emergency storage will not be used when siting new facilities. All new facilities must be sited using normal peacetime criteria to assure maximum capability is built into each facility.

5-24. Explosives-Loaded Aircraft, Airfield Areas, and Related Support Facilities:

a. Parked explosives-loaded aircraft must comply with minimum airfield criteria in AFR 86-14. MAJCOMs may waive airfield criteria as stated in AFR 86-5. AFR 86-5 waivers will not be requested as prescribed for Q-D waivers in chapter 11 of this regulation.

b. Airfield and heliport explosives-prohibited areas are defined in AFM 86-3, volume II, and AFR 86-14. Explosives and explosives-loaded aircraft should not be parked in these areas. If they are, a waiver must be obtained as specified in AFR 86-14.

(1) Explosives, explosives facilities, and parked explosives-loaded aircraft (or those being loaded or unloaded) must be excluded from:

(a) The ground area under the approach-departure zone of all fixed and rotary wing aircraft landing facilities.

(b) Ground areas in "clear zones" and on either side of runways and taxiways, to the outer limits of the primary surface (lateral safety zones) described for the facility in AFM 86-3, volume II, or AFR 86-14, tables 2-2 and 2-7.

(2) On airfields for fixed wing aircraft, explosives should be kept out of those parts of the approach-departure zones that extend beyond the prohibited zones. This should be for the width and entire distance as prescribed in AFM 86-3, volume II, or AFR 86-14, as applicable.

c. Q-D separation requirements for explosives-loaded aircraft and related facilities are shown in table 5-1, except as follows:

(1) Combat aircraft configured only with the items listed below are exempt from Q-D requirements; however, they must still be parked in a designated combat aircraft parking area and are treated as explosives-loaded aircraft in all other respects. This principle is expected to give enough clearance to protect against the effects of an accidental, nonsimultaneous detonation of a single item or a series of propagating explosions.

(a) Gun ammunition (30 mm or less). When loaded with other nonexempt munitions, gun ammunition is not expected to mass deto-

nate and need not be added to the other munitions to determine total NEW for separation or siting purposes.

(b) Rockets--2.75-inch.

(c) Photoflash cartridges.

(d) Class/division 1.4 munitions.

(e) AIM-4 series missiles.

(f) MK64 Mod 0 sounder underwater signals.

(g) Pyrotechnics.

(h) Gunships loaded with 40 and 105 mm ammunition. (Ammunition must not be left unattended, must remain in shipping containers, and will be delivered and loaded immediately before engine start. MAJCOM safety approval is also required.)

(2) Aircraft which contain only the installed explosive items listed below are considered "nonexplosives-loaded" and should be parked accordingly, unless they are awaiting an explosives load. These items are not added to the explosives load in determining Q-D requirements.

(a) Moderate quantities of small arms ammunition for crew use.

(b) Authorized signals or flares.

(c) Egress system components.

(d) Squibs.

(e) Detonators for jettisoning external stores.

(f) Engine starter cartridges.

(g) Fire extinguisher cartridges.

(h) Destructors in electronic equipment.

(i) Explosive components of emergency kits and equipment.

d. An aircraft of a contract carrier is considered a military aircraft if it is performing exclusive military functions. Parked aero club aircraft are nonmilitary aircraft for Q-D purposes. Operation of aero club aircraft on military runways or taxiways does not affect the military use only designation.

e. In separating explosives from airfield and heliport explosives-prohibited areas, consider all limiting factors of Q-D, airfield prohibited areas, and airfield and airspace criteria (AFM 86-3, volume II, or AFR 86-14). The minimum separation will be the criteria requiring the greatest distance.

5-25. Petroleum, Oil, Lubricant (POL) and Hydrazine H-70 Facilities:

a. Facilities With More Than 500 Gallons:

(1) Except for the special situations described in b below, table 5-1 will be used for determining separations from explosives locations or explosives-loaded aircraft to POL bulk storage, railroad tank car and tank truck discharge operations, POL transmission pipelines, hydrants, and fill standards for "retail" dispensing operations involving quantities in excess of 500 gallons. Pumps and pumphouses serving underground POL systems must be located a minimum of 50 feet from explosives locations.

(2) Fire clearance criteria from POL locations is specified in the NFPA, Standard 30. If required fire clearances are greater than those required by this regulation, use the greater required separation.

(3) Antisiphon systems will be used where applicable.

(4) Any aboveground petroleum storage tank which has a capacity of 661 gallons or more must be enclosed within a diked area as prescribed in AFM 88-15, AFOSH Standard 127-40, and NFPA, Standard 30.

b. POL Facilities Servicing Only Potential Explosion Sites:

(1) POL tanks built on or above the surface of the ground which are supplied by underground pipes and service only an explosives operating area or line (such as a combat aircraft parking area or series of explosives inspection, build-up, and/or ready storage facilities) may be sited at incremental (K40/50) IB distance with a minimum of 400 feet from the supported PESs if:

(a) A dike system is provided according to requirements of National Fire Protection Association (NFPA), Standard 30.

(b) The major command accepts the possible loss of the tanks and any collateral damage that a fire might cause as a result of tanks being punctured by fragments.

(2) When POL tanks service a single PES, the tanks may be located at the applicable fire protection distances from the PES as prescribed by NFPA requirements. Distances from other PESs shall be according to table 5-1.

c. Explosives safety separation is not required between explosives locations and underground petroleum facilities with 6,000 gallons or less of fuel oil for oil heaters or diesel-powered generators if:

(1) The tank is properly buried and meets construction and fire criteria according to NFPA, Standard 30.

(2) The tank top is below the level of the heater room floor or equipment installation level or if antisiphoning devices are installed.

d. Quantities of 500 Gallons or Less. Where tanks serve equipment (such as oil heaters or diesel generators) located in explosives buildings, antisiphoning devices will be used. They are not needed if the level of the tank installation is such that siphoning is impossible.

(1) Aboveground petroleum facilities (such as tanks, pumps, or pumphouses) will be located a minimum of 50 feet from explosives locations.

(2) If the tank meets the criteria in c above, explosives safety separation is not required between explosives locations and underground petroleum facilities.

e. Parking Fuel Service Trucks. Parking areas for fuel service trucks are considered aboveground petroleum facilities.

f. Mobile Dispensing Units. There must be at least 100 feet between explosives and any mobile petroleum dispensing unit operating in an explosives area, except:

(1) Where a shorter distance is needed during transfer operations to an underground tank located at less than 100 feet (as allowed under d above).

(2) Where needed to refuel a mobile explosives transporter (such as the Environmental Control Unit for the LGM-30) with the load aboard.

(3) Where needed to refuel vehicles with missiles in an alert or rapid dispersal posture (such as GLCM Launch Control Centers or Transporter Erector Launchers) in a Ready Storage Shelter or Quick Reaction Alert Facility.

g. Liquid Petroleum (LP) Gas Facilities. LP gas tanks will meet the requirements of this section for like quantities of fuel and explosives of the various divisions.

h. Exceptions. The following are excepted from the above requirements:

(1) Separation between POL hydrants set on the flightline flush with the pavement and explosives-loaded aircraft or explosives loading and unloading operations.

(2) POL supplies to support a single facility or small complex in a clear zone do not require Q-D separation from a PES. POL tanks do require separation for fire protection from all facilities, as prescribed by NFPA.

(3) Materials-handling equipment.

(4) Separation of facilities licensed according to paragraph 4-10 and POL facilities.

5-26. Mineral Exploration and Extraction. DOD Directive 4700.3 (implemented by AFR 87-9) requires that DOD land be made available for mineral exploration and extraction to the maximum extent possible consistent with military operations. However, it also recognizes that explosives operations or land contamination may restrict or prohibit exploration or extraction.

a. Plans for mineral exploration or extraction near explosives locations, or for leasing, transfer, or disposal of DOD property contaminated with, or suspected to be contaminated with, explosives must be approved by the DOD Explosives Safety Board (DDESB). Submit such plans according to the rules for site plans in chapter 8.

b. Mineral exploration and drilling activities must be separated from explosives locations by PTR distance, provided there is no occupancy of the site by personnel when the exploration or drilling is completed. Use IB distance if occupancy is to continue after exploration or drilling is completed. If toxic chemical agents or munitions are present, contact HQ AFISC/SEWV, Norton AFB CA 92409-7001, to determine distances to be maintained to the exploration or drilling activity. Examples of exploration activities are seismic or other geological tests. Drilling activities include exploration or extraction of oil, gas, and geothermal energy.

c. Mining activities must be separated from explosives locations by IB distance. If toxic chemical agents or munitions are present, contact HQ AFISC/SEWV to determine distances to be maintained to the mining activity. Examples of mining activities are strip, shaft, open pit, and placer mining which normally require the presence of operating personnel.

d. Exploration, drilling, and mining are prohibited on the surface of explosives or toxic chemical agent contaminated lands. Exploration and extraction are permitted by directional (slant) drilling at a depth greater than 50 feet beneath the contaminated land or by shaft mining at a depth greater than 100 feet beneath such land surfaces.

Section D—Liquid Propellants

5-27. Q-D Storage Criteria for Liquid Propellants:

a. General Information:

(1) These criteria are minimum requirements for all Air Force installations where liquid propellants are present. This includes liquid and gaseous substances used for propulsion of

missiles, rockets, and other related devices. They apply to all types of liquid propellant storage areas in which liquid fuels or liquid oxidizers are stored, including missiles, rockets, and multicompartment tanks. For more information on the characteristics of these propellants, see AFM 161-30, volume I or II, as applicable.

(2) These criteria do not apply to:

(a) Liquid propellant manufacturing facilities.

(b) Prepackaged liquid propellant units when installed as components of weapon systems having assigned storage compatibility and explosives classifications.

(c) A single, minimum-size standard shipping container of a given propellant. This container may be one 55-gallon drum or one 500-pound net weight cylinder. Such containers will be stored in the normal manner prescribed for the commodity.

(d) One nonstandard container with lesser quantities than (c) above.

(3) When storage involves other explosives (solid) or explosive items, the Q-D criteria for those hazards, together with the criteria for the liquid propellant, will be used.

(4) These criteria do not consider toxic hazards. If the toxic hazard is a controlling factor in siting and storing a liquid propellant, it should be considered along with explosives hazards when a site plan is prepared.

(5) Q-D criteria tables shown below do not apply to propellants contaminated to a degree that would increase the hazards involved. Send a request through channels to HQ AFISC/SEWV, Norton AFB CA 92409-7001, to set up:

(a) Q-D criteria for conditions other than those shown here;

(b) Explosives equivalents for propellants; or

(c) Combinations other than those in table 5-9.

(6) The military department developing a liquid propellant (or first adopting for use any liquid propellant not listed here) must assign the hazard classification and compatibility group designation. This will be coordinated with the other military departments. The responsible MAJCOM will forward substantiated proposals for such assignments as soon as systems application planning allows or warrants to HQ AFISC/SEWV, Norton AFB CA 92409-7001.

b. Determining the Propellant Quantity To Consider in Calculating Required Separation:

(1) The NEW of a propellant is the total quantity of the propellant in a tank, drum, cylinder, or other container. When storage containers are not separated from each other by required distances, calculate the quantity of propellant on the basis of the total contents of all such storage containers. Propellant in related piping must be included to the point that positive means have been provided for interrupting the flow in the event of a mishap.

(2) Where incompatible propellants are not separated by the required distances, or provisions are not made to prevent their mixing, the combined quantity of the two will be used. Consult table 5-9 to see if high-explosives equivalents apply.

(3) When quantities of propellants are given in gallons, table 5-10 will be used to find the quantity in pounds.

c. Measuring Separation Distances to Exposures:

(1) Measure the distance from the closest point of all hazard sources (containers, buildings, or positive cut-off points in piping). The source requiring the greatest distance will be the controlling factor. See d(2)(h) below for pipelines.

(2) When buildings containing a propellant in cylinders or drums are effectively subdivided, measure distances from the nearest container or the separate subdivision of containers requiring the greatest separation.

d. Hazard and Compatibility Storage Groupings:

(1) Liquid propellants may be hazards of various types and degrees (table 5-11). The following groups are based on these hazards:

(a) Group I. Relatively Low Fire Hazard (Table 5-12). These materials are the least hazardous. They have, or may develop, a fire hazard potential requiring some separation.

(b) Group II. Fire Hazard (Table 5-13). These materials are strong oxidizers, subject to rapid combustion. When they come in contact with certain materials, such as organic matter, these propellants present a serious fire hazard. Therefore, storage facilities are prescribed, on the basis of quantities involved, to minimize property loss.

(c) Group III. Fragment and Deflagration Hazard (Table 5-14). Storage containers of these materials may rupture in a fire or deflagration or there may be a vapor phase explosion.

Either the pressure rupture or vapor phase explosion can cause a fragment hazard from the container, its protective structure, or adjacent material.

(d) Group IV. Detonation Hazard (Table 5-15). These materials present the same hazard as mass-detonating explosives. They create air blast overpressure as well as severe fragment hazards from containers and surrounding equipment and material.

Table 5-9. Liquid Propellant High Explosives (TNT) Equivalents.

PROPELLANT COMBINATION (1)	STATIC TEST STAND (2)	RANGE LAUNCH PADS (2)
LO_2 - LH_2	60 percent	60 percent
LO_2 - LH_2 + RP-1	Sum of 60 percent for LO_2 - LH_2 10 percent for LO_2 - RP-1	Sum of 60 percent of LO_2 - LH_2 20 percent for LO_2 - RP-1
LO_2 - RP-1 or LO_2 - NH_3	10 percent	20 percent up to 500,000 pounds plus 10 percent over 500,000 pounds
Inhibited Red Fuming Nitric Acid (IRFNA)-Aniline (3)	10 percent	10 percent
IRFNA-UDMH (3)	10 percent	10 percent
IRFNA-UDMH + JP-4 (3)	10 percent	10 percent
N_2O_4-UDMH + N_2H_4 (3)	5 percent	10 percent
N_2O_4-UDMH + N_2H_4-Solid (3)	Five percent plus H.E. equivalent of the solid propellant	10 percent plus H.E. equivalent of the solid propellant
Pentaborane + a Fuel	10 percent	20 percent up to 500,000 pounds plus 10 percent over 500,000 pounds
Pentaborane + an Oxidizer	60 percent	60 percent
Tetranitromethane (alone or in combination)	100 percent	100 percent
Nitromethane (alone or in combination)	100 percent	100 percent
Substitutions	Percentages given above continue to apply where any of the substitutions shown below are made in the basic combination. (4)	

NOTES:

1. Basis of the table. Developed by the Department of Defense Explosives Safety Board Work Group on Explosives Equivalents for Liquid Propellants. Tetranitromethane and nitromethane are Hazard Group IV propellants and are known to be detonable. The net weight of all nonnuclear mass-detonating explosives involved in any configuration, including components of nuclear items, will be added to the above equivalencies, where applicable, in determining required separations. See paragraph 5-27a(5) concerning equivalents for combinations other than shown above.

2. The percentage factors used for the explosives equivalencies of propellant mixtures at launch pads and static test stands were based on such propellants located aboveground and unconfined except for their tankage. Other configurations will be considered on an individual basis to determine applicable equivalencies. MAJCOMs concerned will submit substantiated recommendations to HQ AFISC/SEWV, Norton AFB CA 92409-7001, together with, or in the same manner as, site plans for new facilities under chapter 8.

3. These are hypergolic combinations. (Fuel and oxidizers that will ignite with each other.)

Table 5-9. Continued.

4. Substitutions, Alcohols or other hydrocarbons substitute for RP-1; H_2O_2, F, BrF_5, CLF_3, OF_2, or O_3F_3 substituted for LO_2, Monomethylhydrazine substituted for hydrazine or unsymmetrical dimethylhydrazine (UDMH), or ammonia substituted for any fuel where hypergolic combination results.

Table 5-10. Factors for Converting Gallons of Propellant Into Pounds.

ITEM	POUNDS PER GALLON	AT TEMP DEGREE F
Anhydrous Ammonia	5.1	68
Aniline	8.5	68
Bromine Pentafluoride	20.7	68
Chlorine Trifluoride	15.3	68
Ethyl Alcohol	6.6	68
Ethylene Oxide	7.3	68
Fluorine	12.6	-306
Furfuryl Alcohol	9.4	68
Hydrogen Peroxide (90 percent)	11.6	68
Hydrazine	8.4	68
Isoproply Alcohol	6.6	68
Liquid Hydrogen	0.59	-423
Liquid Oxygen	9.5	-297
Methyl Alcohol	6.6	68
Monomethylhydrazine	7.3	68
Nitromethane	9.5	68
Nitrogen Tetroxide	12.1	68
Otto Fuel	10.3	77
Oxygen Difluoride	12.7	-229
Ozone Difluoride	14.6	-297
Pentaborane	5.2	68
Perchloryl Fluoride	12.0	68
Red Fuming Nitric Acid (III A)	12.5	68
RP-1	6.8	68
Tetranitromethane	13.6	78
UDMH	6.6	68
UDMH/Hydrazine	7.5	68

Table 5-11. Propellant Hazards and Compatibility Groups.

Propellant	Liquid Propellant Hazard Group (Note 1)	Liquid Propellant Compatibility Storage Group (Note 2)
The alcohols: CH_2OH, C_2H_3OH, $(CH_3)_2CHOH$	I	Liq-C
Anhydrous Ammonia, NH_3	I	Liq-C
Aniline, $C_6H_5NH_2$	I	Liq-C
Hydrocarbon fuels, JP-4, JP-5, RP-1	I	Liq-C
Nitrogen Tetroxide, N_2O_4	I	Liq-A
Otto Fuel II	I	Liq-G
Red Fuming Nitric Acid, HNO_3	I	Liq-A
NOS-58-6 Monopropellant	I	Liq-G
Bromine Pentafluoride, BrF_5	II	Liq-A
Chlorine Trifluoride, ClF_3	II	Liq-A
Hydrogen Peroxide greater than 52% H_2O_2	II (Note 3)	Liq-A
Liquid Fluorine, LF_2	II	Liq-A
Liquid Oxygen, LO_2 (Note 5)	II	Liq-A
Perchloryl Fluoride, ClO_3F	II	Liq-A
Oxygen Difluoride, OF_2	II	Liq-A
Ozone Difluoride, O_3F_2	II	Liq-A
Ethylene Oxide, C_2H_4O	III	Liq-D
Hydrazine, N_2H_4	III	Liq-C
Hydrazine-UDMH mixtures	III	Liq-C
Liquid Hydrogen, LH_2	III	Liq-C
Mixed Amine fuels	III	Liq-C
Monomethylhydrazine, CH_3NHNH_2	III	Liq-C
Pentaborane, B_5H_9	III	Liq-D
UDMH, $(CH_3)_2NNH_2$	III	Liq-C
Nitromethane, CH_3NO_2	IV (Note 4)	Liq-F
Tetranitromethane, $C(NO_2)_4$	IV	Liq-F

NOTES:

1. The toxic hazard may be an overriding consideration. Consult AFM 161-30, volume I or II, to determine toxicity and related siting criteria.

2. If the propellants can be stored together without increasing the hazards, they are assigned the same compatibility group letter. Propellants with unlike letters are incompatible for storage. The prefix "Liq" is used here to distinguish liquid propellant groups from the groups listed in paragraph 4-18. Do not mix liquid compatibility storage groups with other explosives storage groups. This list does not include group E commodities listed in AFM 161-30, volume II, because they do not require explosives safety considerations. Groups F and G have been added.

3. Under certain conditions, concentrated hydrogen peroxide greater than 74 percent can detonate.

4. Although nitromethane is chemically compatible with Liq-C propellants, it is assigned to a separate group because of explosives hazard differences. Group F has been added to provide the required degree of safety under the circumstances.

5. LOX generating plants and storage facilities containing breathing oxygen will be separated from explosives locations by at least 75 feet if unoccupied. If normally occupied, they must be separated from explosives locations according to table 5-1.

(2) Since the hazards differ in each of the above groups, the predominant hazard of a propellant can vary with the storage location and the operation involved. In determining safety criteria and separation distances, consider the following conditions:

(a) Range Launch Pads. Range launch pads involve research, development, test, and

space exploration launches. The closeness of fuel and oxidizer to each other makes these operations hazardous. Launch vehicle tanks are also involved. High-explosives equivalents must be used.

(b) Operational Launch Pads. Activities at operational launch pads are similar to those at range launch pads. Launch vehicle tanks are involved at these locations. High-explosives equivalents must be used for all quantities of incompatible propellants that could possibly become mixed in the event of a mishap. When an operational launch pad is used for training launches, it will be considered a range launch pad.

(c) Static Test Stands. These units remain static and are subject to better control than obtainable in (a) and (b) above. To reduce the hazard related to rockets or missiles on launch pads, tanks may be separated (except fuel and oxidizer tanks that are mounted one above the other). High-explosives equivalents must be used for all quantities of incompatible propellant that could possibly become mixed in the event of a mishap. The hazards from properly separated "run tanks" (operating tanks) and piping are generally the hazards for the materials they contain. This does not apply if the materials are incompatible and may become mixed. If the materials are subject to mixing, use high-explosives equivalents.

(d) Ready Storage. This storage is close to launch and static test stands, but it is not usually directly involved in feeding the engine. If the facility is designed to prevent mixing fuels and oxidizers or initiation of a detonation in or on nearby facilities, it presents Group I through III hazards. However, if positive measures cannot be taken to prevent mixing of fuel and oxidizer or to prevent the propagation of a detonation, use high-explosives equivalents.

(e) Cold-Flow Test Operations. These present only fire and fragment hazards if the system is airtight, fuels and oxidizers are never employed concurrently, each commodity has a completely separate isolated system and fittings to positively prevent intermixing, and the propellants are of required purity. Otherwise, use high-explosives equivalents.

(f) Bulk Storage. This is the most remote storage. It is never directly connected to any launch or test operation. It consists of the area, tanks, and other containers. It includes the tanks and containers used to hold propellant for supplying ready storage and, indirectly, run tanks where no ready storage is available. It generally presents fragment hazards. However, if positive measures cannot be taken to prevent mixing of fuel and oxidizer or to prevent propagation of a detonation, use high-explosives equivalents.

(g) Rest Storage. This resembles bulk storage. It is a temporary parking location for barges, trailers, tank cars, and portable tanks used for topping operations (when not engaged in topping operations). It includes parking locations for such vehicles when they are unable to empty their cargo promptly into proper storage containers. Fire and fragment hazards govern. A transporting vehicle becomes a part of the storage container to which it is attached during propellant transfer.

(h) Transfer Pipelines. These present minimum hazards when used to transfer Group I through III propellants between unloading points and storage areas or between storage areas and points of use. Group IV material is generally too hazardous to be moved any significant distance through such lines. Short fill, drain, or feeder lines that are part of a system are not considered "transfer pipelines" within the meaning of this paragraph. The following apply to transfer pipelines:

Group I	No minimum Q-D has been set up. Give normal fire protection for each pipeline site.
Groups II and III	Keep at least 25 feet between the pipeline and inhabited buildings of any type. Give normal fire protection for each pipeline site.
Group IV	Generally considered too hazardous to transport by pipeline. However, if the line is designed to carry the material, apply the criteria in table 5-15 to each part of the line not covered by the safety radius formed by applying the principles in c above.

(3) Liquid propellants used for propulsion or operation of missiles, rockets, and other related devices are assigned to hazard groups and compatibility storage groups.

e. Tables of Distances:

(1) Group I. Relatively Low Fire Hazard. Table 5-12 applies.

(2) Group II. Fire Hazard. Table 5-13 applies.

(3) Group III. Fragment and Deflagration Hazard. Table 5-14 applies.

(4) Groups I, II, and III. When Groups I, II, and III materials are stored with more hazardous materials under conditions described in d(2) above, tables 5-9 and 5-15 apply, as appropriate.

(5) Group IV. Detonation Hazard (100 percent high-explosives equivalent). Table 5-15 applies.

(6) Compatible Storage. Separation distance between stored quantities of different propellants of the same compatibility storage group will be determined as follows:

(a) For propellants of the same hazard group, use the distance given in the intragroup/intraline column of the applicable table (5-12, 5-13, 5-14, or 5-15) for the largest quantity of propellant involved.

(b) For propellants of different hazard groups, based on each quantity of propellant involved, determine the distance given in the intragroup/intraline column of the applicable table for each hazard class. Use the greatest distance.

(7) Incompatible Storage:

(a) When propellants are of different compatibility groups, use the greatest IB distance. EXCEPTION: If propellants are subdivided by barriers, or other means to prevent mixing in the event of a mishap, determine the minimum separation as in (6)(a) or (b) above, as applicable.

(b) Minimum separation between quantities of hazard Groups I through IV and the various "divisions" of other explosives will be the distances prescribed for POL in paragraph 5-25. Use table 5-1 for the division of explosives involved. If more than one division is involved, use the distance for the greatest separation.

Table 5-12. Hazard Group I Separation Distances.

Pounds of Propellant		Inhabited Buildings, Public Traffic Routes, & Incompatible Storage Groups. [2]	Intragroup/ Intraline for Compatible Storage Groups. [3]	Pounds of Propellant		Inhabited Buildings, Public Traffic Routes, & Incompatible Storage Groups. [2]	Intragroup/ Intraline for Compatible Storage Groups. [3]
Over	Not Over	Distance in feet	Distance in feet	Over	Not Over	Distance in feet	Distance in feet
Col 1	Col 2	Col 3	Col 4	Col 1	Col 2	Col 3	Col 4
	100[1]	30	25	60,000	70,000	130	95
100	200[1]	35	30	70,000	80,000	130	100
200	300[1]	40	35	80,000	90,000	135	100
300	400[1]	45	35	90,000	100,000	135	105
400	500[1]	50	40	100,000	125,000	140	110
500	600	50	40	125,000	150,000	145	110
600	700	55	40	150,000	175,000	150	115
700	800	55	45	175,000	200,000	155	115
800	900	60	45	200,000	250,000	160	120
900	1,000	60	45	250,000	300,000	165	125
1,000	2,000	65	50	300,000	350,000	170	130
2,000	3,000	70	55	350,000	400,000	175	130
3,000	4,000	75	55	400,000	450,000	180	135
4,000	5,000	80	60	450,000	500,000	180	135
5,000	6,000	80	60	500,000	600,000	185	140
6,000	7,000	85	65	600,000	700,000	190	145
7,000	8,000	85	65	700,000	800,000	195	150
8,000	9,000	90	70	800,000	900,000	200	150
9,000	10,000	90	70	900,000	1,000,000	205	155
10,000	15,000	95	75	1,000,000	2,000,000[4]	215	175
15,000	20,000	100	80	2,000,000	3,000,000[4]	225	190
20,000	25,000	105	80	3,000,000	4,000,000[4]	235	200
25,000	30,000	110	85	4,000,000	5,000,000[4]	275	210
30,000	35,000	110	85	5,000,000	6,000,000[4]	285	215
35,000	40,000	115	85	6,000,000	7,000,000[4]	295	220
40,000	45,000	120	90	7,000,000	8,000,000[4]	300	225
45,000	50,000	120	90	8,000,000	9,000,000[4]	305	230
50,000	60,000	125	95	9,000,000	10,000,000[4]	310	235

NOTES:

1. See paragraph 5-27a(2)(c) and (d).

2. See paragraph 5-27e(7).

3. See paragraph 5-27e(6).

4. CAUTION: Extrapolations above 1,000,000 pounds extend well outside data included in the Bureau of Mines report forming the original basic criteria. However, they are supported by independent calculations and knowledge of like phenomena.

b. Intraline Distance:

(1) K9 corresponds to a peak overpressure level of 10 to 11 psi (0.7 bars). Blast occurring at this distance may cause the following damage:

(a) Unstrengthened buildings will suffer severe structural damage approaching total destruction.

(b) Severe injuries or death to occupants of the exposed site are to be expected from direct blast, building collapse, or by impact with hard surfaces.

(c) Aircraft will be damaged both by blast and fragments to the extent that they will be beyond economical repair. If the aircraft are loaded with explosives, delayed explosions are likely to result from subsequent fires.

(d) Transport vehicles will be heavily damaged, probably to the extent of total loss.

(e) Direct propagation of explosion between two explosives locations is unlikely when barricades are interposed between them to intercept high-velocity, low-angle fragments.

(f) Improperly designed barricades or structures may increase the hazard from flying debris or may collapse in such a manner as to increase the risk to personnel and equipment.

(g) Barricading is required. Additionally, exposed structures containing equipment of high-monetary value of critical mission importance or wherein personnel exposure is significant may require hardening.

(h) Reinforced concrete facilities will sustain major damage. Serious injuries and fatalities are expected.

(2) K18 corresponds to a peak overpressure level of 3.5 psi (0.24 bars). Blast occurring at this distance is not expected to result in direct propagation of the explosion but may cause the following damage:

(a) Some possibility that delayed communication of an explosion may occur from fires or as a result of equipment failure at the exposed site.

(b) Damage to unstrengthened buildings will be of a serious nature and approximate 50 percent or more of the total replacement cost.

(c) There is a 10-percent chance of eardrum damage to personnel.

(d) Personnel injuries of a serious nature or possible death are likely from fragments, debris, firebrands, or other objects.

(e) Unsheltered aircraft can be expected to suffer considerable structural damage from blast. Fragments and debris are likely to cause severe damage to aircraft when small quantities of explosives are involved. Aircraft parked in hardened shelters are nearly totally protected.

(f) Transport vehicles will incur extensive, but not severe, body and glass damage consisting mainly of dishing of body panels and cracks in shatter-resistant window glass.

(g) Control of pressure by suitably designed suppressive construction at the PES or protective construction at the exposed site may be practical. Use of such construction to withstand blast at the exposed site may be practical. Use of such construction to withstand blast overpressure is encouraged if it is more economical than distance alone, or if sufficient distance is not available to prevent the overpressure from exceeding this level.

(h) Reinforced concrete facility walls will receive moderate cracking. Minor injuries to occupants may occur.

c. Public Traffic Route Distance. K24 corresponds to a peak overpressure level of 2.3 psi (0.16 bars). Blast occurring at this distance may cause the following damage:

(1) Unstrengthened buildings can be expected to sustain damage approximating 20 percent of the replacement cost.

(2) Occupants of exposed structures may suffer temporary hearing loss or injury from secondary blast effects, such as building debris, and by impact with hard surfaces.

(3) Personnel in the open are not expected to be killed or seriously injured directly by blast. There could be some personnel injuries caused by fragments and debris depending largely on the explosives source structure and the amount and fragmentation characteristics of the ammunition.

(4) Vehicles on the road should suffer little damage unless hit by a fragment or unless the blast wave causes momentary loss of control.

(5) Unsheltered aircraft should suffer moderate damage to appendages and sheet metal skin from blast and possible fragment penetration. However, the aircraft should be operational with field-level repair.

(6) The risk of injury or damage due to fragments for limited quantities of explosives at the explosives source can be reduced by barricading. Also, many situations arise where control of pressure by suitably designed suppressive construction at the PES or protective construction at the exposed site is practical.

(7) Reinforced concrete facilities and their occupants are protected.

d. Airfield Distance. K30 corresponds to a peak overpressure level of 1.7 psi (0.1 bars). Blast occurring at this distance may cause the following damage.

(1) Unstrengthened buildings can be expected to sustain damage approximating 10 percent of the replacement cost.

(2) Occupants of exposed unstrengthened structures may suffer injury from secondary effects, such as building debris.

(3) Aircraft in landing and takeoff status could lose control and crash.

(4) Unsheltered military and commercial aircraft will likely sustain minor damage due to blast but should remain airworthy.

(5) Personnel in the open are not expected to be killed or seriously injured directly by blast. There could be some personnel injuries caused by fragments and debris depending largely on the explosives source structure and amount of ammunition and fragmentation characteristics thereof.

(6) The risk of injury or damage due to fragments for limited quantities of explosives at the PES may be reduced by barricading or by applying minimum fragment distance requirements.

e. IB Distance. K40/50 corresponds to a peak overpressure range of 1.2 to 0.85 psi (0.08 to 0.06 bars). (For igloos, where reduced IB distances (K25/50 and K35/50) are authorized, the blast effects will be equivalent to K40/50 for other explosives locations.) Blast occurring at this distance may cause the following damage:

(1) Unstrengthened buildings can be expected to sustain damage up to about 5 percent of the replacement cost.

(2) Personnel are provided a high degree of protection from death or serious injury. Injuries that do occur are caused principally by glass breakage and building debris.

(3) Personnel in the open are not expected to be seriously injured directly by blast. There could be some personnel injuries caused by fragments and debris, depending largely on the PES, the amount of ammunition, and its fragmentation characteristics.

(4) Unsheltered aircraft are nearly totally protected.

(5) Control. Glass breakage and structural damage can be reduced by means of orientation and by keeping the surface area of exposed glass panels to a minimum.

5-31. Effects on Combat Aircraft:

a. The degree of damage to an aircraft by a detonation not only depends on the distances but on other factors such as the type of protection given, aircraft design and size, height of burst, and material ductility. Aircraft parked with the nose pointed toward the burst will suffer less damage than those with the tail or either side pointed toward it. Overpressures of 1 to 2 psi are enough to dish in panels and buckle stiffeners and stringers. Peak overpressures of 4 to 6 psi may cause damage beyond economical repair or destruction. The following are generally accepted as damage classification guidance for aircraft:

(1) Major Damage. Depot level maintenance required to restore aircraft to operational status.

(2) Moderate Damage. Intermediate level maintenance required to restore aircraft to operational status.

(3) Minor Damage. Flight of the aircraft not prevented, although performance may be restricted.

b. Barricaded K6 (27 psi) or unbarricaded K11 (8 psi) will prevent simultaneous detonation of explosives on adjacent aircraft. It will not prevent delayed communication by fire from one aircraft to another. Thus, these aircraft could be a total loss.

c. K18 (3.5 psi) is the minimum distance offering a reasonable degree of protection against propagation between explosives-loaded aircraft in the open.

d. Whatever the separation, the risks to other aircraft can be substantially reduced if they are oriented correctly. Virtually all weapon warheads have markedly directional fragmentation patterns, even where they were not specifically designed to achieve this effect. For general purpose (GP) bombs, some 80 percent of the fragments, and all these having the highest velocities, are found to occur in a zone of approximately 30° at right angles to the bomb's major axis. If a loaded aircraft is aligned so that this zone is not pointing at another loaded aircraft, the chances of propagation are reduced significantly.

Table 5-16. Overpressure Effects.

ELEMENT	DAMAGE	SIDE ON OVERPRESSURE
Aircraft	Control surface or other minor damage	1.0-2.0
	Major repair	2.0-3.0
	Complete destruction	4-10
Glass windows, large and small	Shattering, occasional frame failure[1]	0.5-1.0
	Severe frame failure[1]	1.5-3.0
Wood frame structures	Roof rafters cracked	0.5-1.5
	Studs and sheathing cracked	1.0-3.0
	Collapse	over 5.0
Metal (Butler type) buildings	Corrugated aluminum/steel paneling moderately buckled/joints seperated	0.5-1.0
	Severe buckling/some panels torn off	1.0-2.0
	Complete destruction of siding/interior destroyed[2]	over 3.0
Concrete block or brick wall, 8-12 inches (unreinforced)	Severe damage/shattering	1.0-2.0[3]
	Collapse	7.0-8.0
Corrugated asbestos siding	Shattering	1.0-2.0
Reinforced concrete walls	Moderate cracking	3.0-4.0
	Severe spalling/wall displacement	6.0-8.0
	Concrete shelters, bare steel remains	10-14
	Complete destruction	14-20
Liquid storage tanks (unpressurized)	Slight damage	0.5-1.5
	Severe damage	3.0-4.0
	Collapse	8-10
Vehicles/trailers	Complete destruction	10-14
Heavy machinery (generators, compressors, etc)	Moderate damage	6-8
	Complete displacement	8-10
	Destruction	14-20
Steel towers	Blown down	30[4]

NOTES:
1. Frame failure will not occur if glass is thin and breaks easily.
2. Frame failure may occur if siding has been reinforced or strengthened.
3. For reinforced walls or those built between rigid supports, pressures of 3.0 to 4.0 pounds per square inch (psi) are needed for damage or shattering.
4. Where explosives quantities are large, lesser pressures may destroy towers.

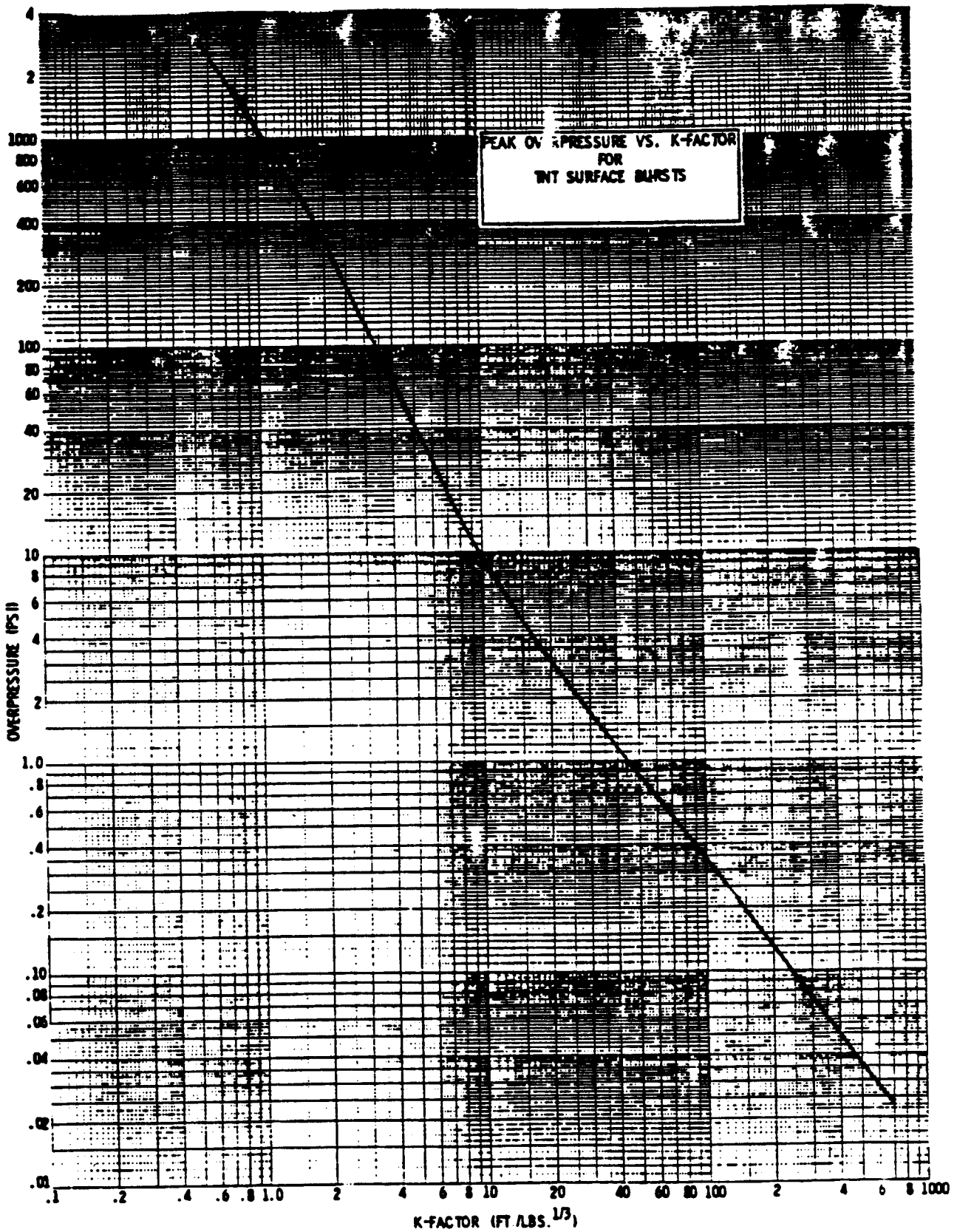

Figure 5-5. Peak Overpressure vs Scaled Distance.

Chapter 6
ELECTRICAL HAZARDS

6-1. General Information. The installation and use of electrical equipment within explosives buildings, magazines, operating locations, shelters, etc. will comply with the latest edition of the National Fire Codes, Standard 70 (NFC 70), as a minimum, unless stated otherwise in this chapter. NFC 70 is also known as the National Electric Code (NEC).

6-2. Location of Electrical Equipment. In planning electrical equipment for hazardous locations, it is often possible to reduce the quantity of special equipment needed by placing the equipment in safe or less hazardous areas.

a. Hazardous Locations. The presence of explosives does not necessarily make an area a "hazardous location" with respect to electrical equipment or wiring. To qualify as a "hazardous location," conditions listed in (1) through (3) below should either exist or be probable under operational or accidental situations. Some specific definitive drawings for explosives facilities require the installation of certain basic electrical equipment meeting parts of the code for the sake of versatility. Hazardous locations are divided into three classes. Each class is broken down into two divisions: Division 1 (the more hazardous) and Division 2. For additional information, see the NEC.

(1) Class I. A location where enough flammable gases or vapors exist, or may be present in the air to produce explosive or ignitable mixtures. A room or building that contains vapors from which explosives may condense will be considered a Class I hazardous location.

(2) Class II. A location which is hazardous because of the presence of combustible dust. For example, a room or building that contains explosive dust whose size or chemical composition is such that particles may disperse to create an explosive atmosphere.

(3) Class III. A location which is hazardous because of the presence of easily ignitable fibers which are not likely to be in suspension in air in large enough quantities to produce an ignitable mixture.

b. Approved Equipment. Electrical equipment listed by the Underwriters' Laboratories (UL) or other recognized testing agency is acceptable only when used under the recommended environmental and operational conditions. Equipment will be approved not only for the class of location, but also for the explosion properties of the specific gas, vapor, or dust that will be present. For additional details see the NEC.

c. Special Requirements:

(1) Electrical equipment and installations in Class I, II, or III hazardous locations involving explosives will comply with the requirements of the code for Division 1 of the appropriate hazardous location class. Equipment and installations in locations which could be used as either a Class I or II hazardous location will meet the requirements of both classes.

(2) An alternate source of power must be available for explosives operations where the lack of a continuous power supply may cause a fire or explosion.

(3) Low power, solid state devices which are "intrinsically safe" under the National Fire Codes, Standard 493, may be used in any hazardous location.

d. Maintenance. More than ordinary care will be taken in the maintenance of equipment and electrical installations in hazardous locations. The equipment must be periodically inspected and maintained by qualified personnel, with a written record kept of the inspections and maintenance. Where inspection frequency is not prescribed in a technical order (TO), technical manual (TM), or other directive, the inspection period will be fixed by local authority on the basis of the existing situation.

e. Photographic Lighting. Magnesium flashlights or photoflash bulbs are not allowed in hazardous locations. Only lighting equipment bearing the UL listed label for the hazard involved will be used in photography.

6-3. Repairs of Electrical Equipment. Repairs and changes will be made only by qualified persons authorized to do such work. Where the equipment may have been exposed to contamination from explosives, the explosives will be removed or neutralized before repairs are started.

6-4. Electrical Lines. The following standards apply to each explosives location within an explosives storage area and to ready explosives facilities located outside a storage area. They are mandatory for new construction and

recommended for existing facilities. They do not apply to licensed explosives locations on the base (such as survival equipment rooms, egress systems maintenance shops, or arms rooms).

a. Existing lines of all types carrying 15,000 volts or less should be separated by at least 50 feet from the nearest conductive point of any explosives operating or storage location. The separation distance should be greater than the distance between the poles which support the lines. Items such as metal window frames, lightning arresters and their exposed and down connectors, metal doors, ventilators, and ground systems are examples of conductive points.

b. Public service communications lines, primary military emergency communications lines, and existing high voltage electrical power lines exceeding 15,000 volts should be separated from explosives by incremental public traffic route (PTR) distance as shown in table 5-1, but in no case will the separation be less than 200 feet. Underground electrical distribution systems are separated as a government-controlled underground utility according to table 5-1, line 29. For existing aboveground main distribution systems, use the criteria in c(2) below.

c. For power lines or explosives locations sited after 1 February 1982, the following separations also apply:

(1) For aboveground electrical distribution lines carrying less than 69 kilovolts (kv), the towers or poles supporting these lines and unstaffed electrical substations will be no closer to explosives exposures than incremental PTR distance.

(2) For aboveground electrical transmission lines carrying 69 kv or more, the towers or poles supporting these lines and power houses which are part of a grid system serving a large off-base area will be located no closer to explosives exposures than incremental inhabited building distance. Incremental PTR may be used if loss of the line will not create serious social or economic hardships.

(3) Electrical transmission lines which can be interrupted without loss of power (i.e., power is rerouted through other existing lines or networks) will be separated from explosives sites according to (1) above.

6-5. Electrical Service Lines to Explosives Locations (Except Licensed Explosives Locations). Each service line (except for local telephone connections and similar low voltage "intercom" or alarm systems) must be run underground from a point at least 50 feet away from the building. The line side of the main disconnecting switch or circuit breaker must have suitable lightning arresters, usually at the point of the overhead to underground riser service connections.

a. When the service entrance conductor terminates in a normally open switch or a single transformer (in, on, or near the building), there must be a second set of properly grounded lightning arresters nearby.

b. Aboveground electrical service lines required to be in close proximity to an explosives operating facility will be no closer to that facility than the length of the lines between the poles or towers which support the lines, unless effective means are provided to assure that energized lines which break, cannot come into contact with the facility.

c. If possible, local telephone service and similar low voltage "intercom" or alarm systems should also comply with the same underground routing for the last 50 feet. Where overhead "service drops" are used, the stored explosives must be protected from undue exposure to lightning and from the introduction of excessive power through the line from other outside sources, such as broken power lines.

6-6. Electrical Motors for Hazardous Locations. Electrical motors should not be installed in a room or building which is a Class I or II hazardous location. They should have no connection to the building except through glands or apertures adequately sealed against entrance of hazardous materials either into the location or into the motor itself. If it becomes necessary to mount an electrical motor within a hazardous location, paragraph 6-2 applies.

6-7. Portable Lighting Systems. UL-listed floodlight systems, mounted on heavy portable stands and placed outside the magazine door or the outdoor working area, may be used where required. Service cords must be placed or protected so that they cannot be walked on or run over by equipment.

6-8. Permanent Lighting for Storage Magazines. If permanent lighting is essential, use an approved type of disconnect switch placed outside the magazine and arranged so that the switch can be locked in the open position. The power will be on only when personnel are working in the magazine. Internal fixtures will be

standard UL-approved or equal. Explosive proof lighting is required only for the hazardous locations as listed in paragraph 6-2a.

6-9. Portable Generators. See chapter 3 for positioning and use of portable support equipment. Place or protect each electrical cord so that it cannot be walked on or run over by equipment.

6-10. Flexible Cords. Flexible cords should be type SO hard service cord. Splices are not allowed. All flexible cords, receptacles, and attachment plugs must be equipped with three prongs so that the third prong (green wire) acts as ground. Flexible cords will not be used in place of fixed or installed electrical wiring.

6-11. Flashlights and Lanterns. Flashlights and hand lanterns powered by low voltage dry cell batteries and "miners' cap lamps," each approved as "Permissible" by the US Bureau of Mines and by UL for Class I hazardous locations, are considered satisfactory for both Class I and II hazardous locations. In Class III hazardous locations and nonhazardous explosives locations, any type dry cell flashlight is acceptable. Devices which provide "cold light" through chemical action are acceptable for use in any hazardous location.

6-12. Static Electricity and Grounding. Static electricity is a hazard created when charges are allowed to accumulate to the point where an uncontrolled discharge occurs through, or in the presence of, a hazardous substance susceptible to initiation.

a. Personnel who work in a hazardous location or who handle or install unpackaged electrically initiated explosive devices and ammunition must avoid using rags and wearing clothing made of materials which have high-static generating characteristics. Normally, clothing materials acceptable for flightline use are acceptable for handling munitions (TA 016). Cotton or cotton-synthetic blend materials are preferred. Materials of 100 percent polyester, nylon, rayon, silk, or wool are highly static-producing. Wool socks, glove inserts, and caps as well as undergarments of synthetic fabrics or silk are less of a hazard. Nylon field jacket liners should not be worn as an outer garment.

b. Personnel, regardless of the type of clothing worn, can collect a charge of static electricity by being in contact with moving nonconductive substances, or coming in contact with a mass that has been previously charged. Therefore, personnel must be particularly careful to discharge their static electrical potential or equalize it to that of the explosive item before it is handled.

c. Garments will not be put on or removed while engaged in explosives operations. This reduces the generation of static charges caused by physical separation of materials. If outer garments need to be removed, personnel will step out of the immediate area of operation, remove the garment, ground themselves, then reenter.

6-13. Static Grounding:

a. Grounding Equipment. The method generally used to eliminate or reduce the hazard from static electricity is to provide an electrically continuous path to ground.

(1) When all of the objects are conductive, they can be grounded by electrically connecting all parts to a common ground conductor.

(2) When deemed necessary, effective grounding must include the exterior of the facility and the contents of a container. Partial grounding, or using conductors that are too weak or have too much resistance, may increase the static hazard by providing opportunities for discharge through an uncontrolled path to ground.

(3) Electrical continuity may be broken by oil on bearings, paint, or rust at any contact point. To get a continuous circuit, grounding straps should be used to bridge such locations. Equipment in contact with conductive floors or table tops is not adequately grounded.

(4) Static grounds will not be made to telephone grounds; electrical conduit systems; gas, steam, hot water, or air lines; sprinkler systems; or air terminals of lightning protection systems (connection to the "down wire" of the system at the ground level is authorized). Wire used as a static ground conductor should be large enough to withstand mechanical damage and must never be less than American Wire Gauge (AWG) No. 8, or a braided cable of equal resistance, for permanent grounds. Wires used as static grounds for portable or movable equipment will be large enough to carry the expected current load as specified in the item technical data, but will not be smaller than AWG No. 12 (3/32-inch cable).

b. Belting. If static electricity is a hazard, use nonstatic-producing belting which has a resistance to ground not exceeding 600,000 ohms.

This will include belt-driven compressors, conveyor belts, and so forth.

c. Conductive Floors and Conductive Shoes. Use standard conductive floors and shoes to provide proper static grounding for personnel at operations where exposed explosives are present.

(1) Dust-air mixtures of ammonium picrate, tetryl, tetrytol, and dust of solid propellants are also sensitive to static electricity discharge. The static discharge on people can ignite many flammable liquids and air mixtures.

(2) When conductive floors and shoes are required, table tops on which exposed explosives or dusts are encountered should be covered with a properly grounded conductive material meeting the same requirements as those required throughout an entire building or room if the hazard remains localized. In small areas, conductive mats or runners may be substituted.

(3) Personnel, except electricians performing system checks, in places where conductive floors or coverings are required and installed will wear conductive footwear. (See chapter 8 for more information on conductive floors.)

(a) Where conductive floors and shoes are required, the resistance between the ground and the wearer will not exceed 1,000,000 ohms; that is, the total resistance of conductive shoes on a person, plus the resistance of floor to ground.

(b) Conductive shoes and floors need care to ensure retention of their conductive properties. When the shoes are not in use, they should be stored in lockers close to the room where they will be worn, and the change from nonconductive to conductive shoes should be made at that location. Take precautions to prevent the accumulation of even a thin layer of dust or wax which can insulate conductive shoes from the floor. Supervision will ensure that conductive shoes are not altered so as to negate their safety features and that only conductive material is used in their repair. They must also be cleaned thoroughly before being repaired.

(c) Tests of conductive shoes and floors will be made initially and at least semiannually to ensure that they meet resistance requirements.

(d) Test instruments will not be used until all exposed explosives that are subject to possible ignition or initiation have been removed from the room or hazardous area.

6-14. Installed Systems and Equipment Grounds. Attention must be given to the installation and maintenance of electrical grounding where explosives are involved. All grounding mediums should be bonded together. If the structure is equipped with a lightning protection system, all grounds, including static grounds, must be interconnected. Grounding will be tested when installed to ensure that design specifications are met and at intervals thereafter as prescribed in AFP 91-38 and AFR 91-43. Before making any electrical continuity and resistance tests or electrical repairs, remove all exposed explosives that are subject to initiation under the specific circumstances. If there is an operating generator or energized transformer at the location, connect a shunt grounding strap before opening an installed grounding connection for repair or replacement. If the TO or TM does not state the grounding requirements, testing requirements, or the frequency of inspection and testing, use the following guidance:

a. In a hazardous location (as defined in paragraph 6-2a):

(1) Where the installation permits viewing, make a visual inspection of all static bonds for breaks and corroded connections before starting operations on each day the equipment is to be used. Test any suspected connections and bring them up to required standards before starting operations.

(2) Test the static bonding straps on equipment for electrical continuity and resistance every 3 months.

(3) Consider equipment (except a belt-driven machine) as a unit in testing of resistance to ground. In measuring the total resistance to ground for belt-driven machinery, do not count the resistance of the belting.

(4) Ground all conductive parts of equipment through a resistance of 25 ohms or less, unless 10 ohms is required for lightning protection, or unless the system attaches to a lightning protection installation with a ground loop conductor (previously referred to as a counterpoise).

b. In a nonhazardous explosives location:

(1) Static bonding straps must be inspected visually for breaks and corroded connections quarterly. Suspect connections will be tested for continuity, brought up to required standards, and retested before starting operations.

(2) Static bonds for equipment will be tested for electrical continuity and resistance as of-

ten as needed, and at least semiannually to ensure that they are safe. The testing and resistance measurement requirements are the same as those set forth in a above.

c. There is no requirement to perform an earth (ohms) resistance test of the counterpoised system. However, continuity of the static grounding system must be assured. (Resistance between points within the system itself should be very low, as considered inherent in the physical characteristics of the system.)

6-15. Grounding During Electrically Primed Ammunition Operations:

a. Electrically initiated munitions and explosive devices will be grounded when:

(1) The responsible engineering function has determined grounding is necessary for specific maintenance or electrical test operations.

(2) Performing maintenance on any explosive components which incorporate an electrical initiating system.

(3) Assembling to, or disassembling from, an all-up-round (AUR) configuration for a munition which incorporates an electrical initiating system, and when electrical connection or disconnection is being accomplished.

(4) The operations which require grounding listed in (1) to (3) above are normally included in the specific item technical order.

b. Electrically initiated munitions and explosive devices need not be grounded when:

(1) Cleaning, painting, restenciling, or preserving AURs, or replacing components of those AURs which do not incorporate an electrical initiating system.

(2) Cleaning, painting, restenciling, or preserving explosive components which do not incorporate electrical initiating systems.

(3) Replacing components of AURs which incorporate an electrical initiating system when the replacement operation does not require electrical connection or disconnection.

c. When any electrically initiated explosive device is unpackaged and handled, personnel must be electrically grounded as follows:

(1) When working with electrically initiated munitions that require grounding, signs should be posted at entrances and in the room reminding personnel that periodic grounding is required.

(2) Where feasible, personnel should wear conductive sole shoes and stand on conductive floors or conductive mats. Testing of conductive sole shoes should be accomplished before each shift.

(3) Conductive materials may be installed on work table surfaces which are then connected to building ground systems to provide a continual ground.

(4) If the above is not feasible, one or more grounding bars or other suitable grounding device should be installed at the entrance of, or in, the work bay, room, or building. Require each person to touch that grounding device before handling the ammunition and at frequent intervals while working to discharge any spark potential.

(5) The aircraft should be grounded when ammunition is being loaded (unless exempt under paragraph 6-20). Personnel handling the ammunition will touch the airframe before beginning operations and at frequent intervals thereafter to discharge any spark potential. Ensure the aircraft being loaded is not within the hazard cone of operating radar.

(6) When wearing protective clothing, the same grounding requirements apply. Even though the conductivity of the clothing is low, the probability of discharge during handling of explosive components is reduced by grounding.

d. Personnel must not move ammunition rapidly across any nonconductive surface or strike the primer.

e. Personnel should test any grounds associated with these operations as specified in AFR 91-43.

6-16. Lightning Protection. Lightning protection will be installed on facilities, including open pads, revetments, and modules used for manufacturing, processing, handling, or storing explosives, ammunition, explosive ingredients, flammable gases or liquids, and other hazardous materials except as specifically exempted by this regulation. Lightning protection systems must comply with National Fire Protection Association (NFPA) 78, Lightning Protection Code, AFM 88-9 and AFR 91-43. Temporary storage facilities and structures housing operations not regularly conducted at a fixed location should be evaluated as to their need for lightning protection. These systems will be designed using parts and materials listed by the UL or equal.

a. Protection is desirable but not mandatory under the following circumstances:

(1) Igloos that have metallic ventilators, metallic doors, and reinforcing steel which are

all electrically bonded together (that is, made electrically continuous) and grounded.

(2) Facilities used for temporary (nonrecurring) storage of munitions.

(3) Structures, facilities, or mobile equipment housing explosives or explosives operations not regularly situated at a fixed location.

(4) Structures and facilities in areas with an annual average of less than five lightning storms, unless the MAJCOM determines that the protection is required.

(5) Structures and facilities limited to the storage or handling of small arms ammunition where the value of the ammunition is $10,000 or less.

(6) Air terminal systems (lightning rods) are not required on metal aircraft shelters under 50 feet in height.

(7) Miscellaneous explosives locations outside the explosives storage area but situated in buildings primarily used for other purposes and that have relatively small quantities of explosives.

NOTE: This exemption from additional or special lightning protection is made because of the explosives. Other contents of the building may require protection.

b. Air terminals may be omitted on earth-covered igloos constructed according to approved definitive drawings, unless the structures qualify as a "hazardous location" (paragraph 6-2a). The steel arch, earth-covered igloo, having a properly grounded, electrically continuous steel arch is an example. (Air Force drawings AD 33-15-67, 68, and 69 provide examples of such igloos.) When air terminals are removed, the following apply:

(1) Ammunition and explosives must be in closed containers or in their approved shipping configuration.

(2) The lightning protection system must meet the requirements of AFP 91-38 and AFR 91-43.

(3) When a metal ventilator is located directly above the roof of an igloo and the thickness of the metal is less than 3/16 of an inch, the following actions must be taken:

(a) An air terminal must be installed at least 2 feet above the ventilator.

(b) Materials, such as heavy gauge screen wire, must be installed directly below the ventilator to catch molten metals.

(c) Combustible containers and ammunition or explosives must not be stored directly below the ventilator.

c. Explosives storage buildings not constructed under current protection criteria are acceptable and need not be "modernized" if:

(1) The existing lightning protection system is serviceable.

(2) Use of the particular storage facility does not violate any technical requirement for the explosives or weapons systems involved.

(3) The MAJCOM electrical engineer and weapon safety officer determine that engineering and safety considerations at the facility are adequate for the local conditions and explosives involved.

6-17. Testing and Inspection of Lightning Protection Systems. AFR 91-43 and AFP 91-38 contain guidance for installing, inspecting, and maintaining electrical bonding and grounding systems. Facility managers must coordinate with the base civil engineering function to ensure explosives storage and operating locations and facilities are properly protected.

6-18. Electrical Testing of Explosives Items, Components, and Weapon Systems. Follow instructions in specific weapon or weapons system technical orders for testing individual explosive items or weapon systems. Where there is doubt about the safety or adequacy of any test procedure or instrumentation, submit a request to the responsible technical agency (prime AFLC or AFSC element) for advice or assistance. To aid in determining safe testing practices, consider the following guidance:

a. Electrical or electronic test equipment should normally use the weakest possible power source. If feasible, use battery-powered equipment instead of that with a 110-volt source. In any event, the test power source should be incapable of initiating the explosive item being tested. Where greater power must be used, provide positive safeguards to prevent delivery of enough power to start the item.

b. Test equipment should not be placed in hazardous locations (atmospheres) unless necessary, and then it must be suitable for safe operation in that environment (paragraph 6-2).

(1) Special attention should be given to the ventilation requirements of equipment containing vacuum tubes and the possibility of malfunction of equipment using resistors and other devices for limiting testing power.

(2) Unless the test equipment is incapable of initiating the item being tested, operational

shields should be provided where needed to protect personnel from injury.

(3) The explosive item, test equipment, and leads should be protected from any possible exposure to electromagnetic (induction and radiation fields) and electrostatic energy.

6-19. Procedures in Event of Electrical Storms:

a. When an electrical storm (thunderstorm) approaches the near vicinity, personnel will be evacuated (according to a written plan) from locations containing explosives which could be initiated by lightning, unless minimum personnel must remain to carry out an urgent operational mission. The evacuation location or site will depend on the nature of the munition and the protection provided at the withdrawal site.

(1) An electrical storm may be considered "in the near vicinity" when the time between the lightning flash and thunder report is 15 seconds or less. (This will place the flash about 3 miles from the observer.) However, since untrained personnel cannot always evaluate this situation accurately, it may be safer to ask the local weather unit for an evaluation or to arrange for weather warnings when existing or scheduled operations might create an exceptional hazard.

(2) Responsible persons should be empowered to order evacuation when considered necessary. Personnel will be evacuated from these locations:

(a) Explosives locations (other than those licensed under paragraph 4-10), operating buildings, open storage sites or loading docks without approved lightning protection systems, which contain explosives.

(b) Facilities containing exposed explosives, explosive dust or explosive vapor, or unpackaged electrically initiated explosive devices, even though equipped with approved lightning protection systems.

(c) Parked, explosives-laden vehicles and railroad cars.

(d) All locations within intraline distance of facilities and carriers listed above.

b. When buildings containing explosives are evacuated, operations requiring constant attention will continue to be staffed by the minimum number of personnel until it is safe to leave.

c. Evacuated personnel should go to approved protection shelters or to empty earth-covered magazines located at safe distances from any possible explosion. If such shelters are not available, personnel should be withdrawn to safe places at inhabited building distances from the hazardous locations.

d. Aircraft explosives loading, unloading, or preload operations will be stopped at the same time that fueling and defueling operations are suspended (AFOSH Standard 127-39). The chief of maintenance and weather officer will develop and set up warning procedures so that timely precautionary measures may be taken.

6-20. Grounding Aircraft for Explosives Loading and Unloading Operations. Aircraft will be electrically grounded so that resistance to ground does not exceed 10,000 ohms. See TO 00-25-172 for grounding procedures.

EXCEPTION:

a. If there are unusual parking problems in operating from "bare" and "limited" bases, nonmilitary airfields, host nation airfields, etc., the exceptions in b below apply. This exception does not relieve commands from responsibility of providing proper grounding in locations where operations continue or where parking facilities are required on a recurring basis.

b. If static grounding facilities are not available at a suitable parking location, commands should use the best alternate method of reducing the hazard in the following order of precedence:

(1) Commands should accomplish static grounding to 10,000 ohms (or the lowest resistance possible) by using ground rods, as described for refueling operations in TO 00-25-172.

(2) If feasible, the aircraft and the vehicle or handling equipment used in loading and unloading will be connected (bonded) together with an approved static ground capable of equalizing the static charge between the two. For example, although it is considered feasible to bond a cargo vehicle to the aircraft, it may not be feasible to bond an aircraft to a forklift if the lift must move during the loading operation.

(3) Personnel will be particularly careful to discharge themselves or to equalize their static electrical potential to that of the aircraft, vehicle, handling equipment, etc., while loading and unloading explosives (paragraph 6-12).

(4) Cargo aircraft do not require grounding during engine running on/off (ERO) operations.

6-21. Hazards of Electromagnetic Radiation to Electroexplosive Devices (EED):

a. General Information. Use the criteria in this paragraph unless a specific and valid exception has been authorized for a given hazard.

(1) If an electromagnetic hazard to EEDs cannot be solved by technically qualified personnel at the local level, obtain consultation and measurement survey assistance as shown in h below.

(2) If an exception to the guidance given in this regulation has been authorized, take the following action as appropriate:

(a) When the findings apply to a given weapon system, equipment, or explosive item, the applicable weapons system or other TO must be changed to include the criteria. The agency requesting assistance will notify the command and activity responsible for the TO of the required changes, with information copies to all concerned parties.

(b) When circumstances make it appropriate, details of the situation and the authority and basis of the approved criteria will appear in permanent base or unit publications.

b. Electromagnetic Radiation Hazards:

(1) EEDs are initiated electrically. One aspect of possible hazards is the accidental firing of EEDs by stray electromagnetic energy. A large number of these devices are initiated by low levels of electrical energy and are susceptible to unintentional ignition by many forms of direct or induced stray electrical energy, such as from lightning discharges, static electricity, or triboelectric (friction-generated) effects, the operation of electrical and electronic subsystems onboard weapon systems, and radio frequency (R-F) energy due to ground and airborne emitters (transmitters).

(2) Hazards from lightning discharges applicable to ground operations are covered elsewhere in this chapter. Lightning protective systems and requirements normally preclude inadvertently initiating EEDs by direct lightning strikes. Mishaps have occurred where EEDs have been initiated by induced currents from nearby and even distant lightning strikes.

(3) Hazards from static electricity to EEDs in explosive items occur mainly in ground operations. Some airborne incidents attributed to static electricity probably were due to induced effects from lightning strikes or to stray energy from onboard equipment.

(4) Stray energy, such as transients and other forms of induced energy, can be imposed on circuits affecting EEDs from other subsystems by various methods. Examples are inductive or capacitive coupling from other cabling; sneak ground circuits; defective components or wiring; errors in design, modification, or maintenance.

(5) EEDs may be started by exposure to radiated fields of R-F emitters. The degree of susceptibility depends on many variables. These variables are the threshold firing level of the EED; the ability of the leads, circuit, or installation to capture R-F energy; the type and characteristics of R-F energy, and methods of coupling which can introduce this energy into the EED.

c. Safe Separation Distance Criteria. Figure 6-1 should be used as a guide in setting up safe separation distances between EEDs and the transmitting antenna of all R-F emitters. (More accurate distance calculations can be made using the procedures in d(1) below.) These criteria apply generally to critical areas involving explosives assembly, disassembly, testing, loading, and unloading operations. The distances are based on a "worst case" situation; that is, most sensitive EEDs presently in the inventory, unshielded, having leads or circuitry which could inadvertently be formed into a resonant dipole, loop, or other antenna. Where EEDs are in less hazardous configurations, use the procedures outlined in d(2) and (3) below.

d. Shorter Distance Considerations. Less separation distance may be allowed when EEDs are not in an exposed condition. Before the separation distance is reduced, there must be an analysis of local conditions, type of operations, and the inherent R-F protection afforded EEDs in a given situation. Use the formulas in table 6-1 for calculating safe separation distances from EEDs in specific configurations. Other possible configurations are:

(1) For unknown "worst case" situations or exposed EEDs, use table 6-1, column B.

(2) EEDs stored or transported in metal containers with their leads twisted (shorted) together. Such items normally would be safe in almost any military electromagnetic environment; however, due to discontinuities, thickness of metal, or nonconducting gaskets, the inherent shielding effectiveness of the container may be degraded. Use table 6-1, column C, to calculate recommended safe separations and maximum safe power densities.

(3) EEDs stored or transported in nonmetallic containers with their leads twisted (shorted). Use table 6-1, column D, to calculate

recommended safe separations and maximum safe power densities.

(4) Aircraft parked, taxiing, or in flight with externally loaded weapons. Use table 6-1, column E, to calculate recommended safe separations and maximum safe power densities.

(5) Shipments of EEDs and EED subsystems in the transport packaged configuration, inside cargo aircraft. Use table 6-1, column E, to calculate recommended separations and power densities.

(6) Leadless EEDs. For EEDs which do not have lead wires and are in the original shipping configurations and containers, the recommended separation is shown in table 6-1, column F.

(a) When handling and installing EEDs, apply the distance listed in figure 6-1 or table 6-1, column B, even though leadless EEDs are involved, since weapon systems wiring could form a resonant antenna during installation.

(b) Every person who handles these devices must be careful not to touch any electrical contact to the metal surfaces of aircraft and missile skin and/or structure, and must take precautions against building up or discharging static electricity through such contacts.

e. Precautionary Procedures. Leave EEDs in their containers until ready to install them. Be careful not to untwist leads into the form of a resonant dipole, loop, or other effective type antenna. Do not remove shorting clips until the EED is actually ready to be installed.

f. Power Density Criteria. When electrical characteristics of the EEDs in question are not known or when the minimum safe separation distances cannot be complied with because of lack of real estate or other limitations, a power density and field intensity survey should be made. These measurements are more exacting methods of determining a hazard, since actual conditions are involved rather than "worst case" conditions which are assumed for distances in figure 6-1. Compare the measured power density with the recommended maximum power density (for the transmitter frequency) found by using the proper formula in table 6-1. The measured power density should be no greater than the recommended maximum power density.

g. Multiple Transmitters. When more than one transmitter is operating in a certain area, each at a different frequency and distance from an electroexplosives area, the most realistic method of determining whether a hazard exists is by means of a power density survey. There is no simple method, however, of calculating the recommended maximum allowable power density where multiple transmitters of differing frequencies are involved. To evaluate multiple transmitter exposures, follow the procedures in h below. Include in the request for assistance the required data on each involved transmitter and the results of any power density survey performed.

h. Assistance Requests. When a hazardous situations is suspected or the minimum safe separation distances for a particular location are in question, request assistance from higher-headquarters explosives safety personnel. If they are unable to help:

(1) Direct detailed assistance requests to HQ AFISC/SEWV, Norton AFB CA 92409-7001, with information copies to:

(a) MAJCOM headquarters for the host base and tenant unit involved, where applicable. Requests by tenant units will be processed through the host safety office.

(b) HQ AFISC/SEWM, Norton AFB CA 92409-7001, when strategic missile systems are involved. HQ AFISC/SN and AFWL/NTS, Kirtland AFB NM 87117-6001, when nuclear weapons are involved.

(c) HQ AFSC/SDDE and IGF, Andrews AFB DC 20331-5000.

(d) HQ AFLC ISC/IGFW, AFLC LOC/TLMC, Wright-Patterson AFB OH 45433-5001, and applicable air logistics centers.

(e) 1842 EEG/EEIM, Scott AFB IL 62225-6001.

(f) ASD/ENACE, Wright-Patterson AFB OH 45433-6503.

(2) The assistance requests will include all information needed for a complete understanding of the situation. The following information is typically required as a minimum:

(a) Operating frequencies, pulse widths, pulse repetition frequencies, peak power and average power of each transmitter.

(b) Gain characteristics (main and sidelobe), focal length, largest dimension, scan characteristics (rates, dwell times, angles, etc.) and height above the ground for each antenna.

(c) Type aircraft, ordnance and applicable EEDs involved, along with available characteristics of EEDs (no-fire power or energy levels).

(d) Base layout and contour map of the area in question showing transportation routes of EEDs and ordnance subsystems, and location of ordnance and EEDs maintenance, storage

and assembly and disassembly areas, and location of all transmitting antennas, etc.

(3) HQ AFISC/SEWV will determine the technical support requirements from AFSC, AFLC, or AFCC agencies. These organizations will provide support as necessary directly to HQ AFISC/SEWV. HQ AFISC/SEWV decisions will be directed to the originating base or command, with information copies to all agencies involved in the decision process.

i. Examples of Safe Separation and Power Density Calculations:

(1) Example 1. Use figure 6-1 or the proper formula in table 6-1 to find the recommended safe separation distance for the following conditions:

Condition of EED: Exposed
Transmitter frequency = 300 MHz
Average transmitter power = 1000 watts
Antenna gain = 15dB

(a) When using the nomograph:

1. Step 1. Mark the point where 300 MHz lies on the frequency scale.

2. Step 2. Determine the effective radiated power (ERP) by multiplying P_tG_t.

P_t = 1000 watts (given)
$G_t = \log^{-1}(G_{dB}/10) = \log^{-1}(15/10) = \log^{-1} 1.5$
$G_t = 31.6$
$PtG_t = (1000)(31.6) = 31{,}600$ watts.

Mark this spot on the Effective Radiated Power scale.

3. Step 3. Draw a straight line through the points established in steps 1 and 2 to the distance scale. The recommended safe separation distance, about 250 feet, is read where the line intersects the distance scale.

(b) When using the formula:

1. Step 1. Find the proper column and formula from table 6-1. Since the EED is exposed and the frequency is 300 MHz, the applicable formula is:

$$D = \frac{450}{f}\sqrt{P_tG_t}$$

2. Step 2. Determine P_tG_t:

P_t = 1000 watts (given)
$G_{dB} = 15$
$G_t = \log^{-1}(G_{dB}/10) = 31.6$
$P_tG_t = (1000)(31.6) = 31{,}600$ watts

3. Step 3:Substitute these values into the formula:

$$D = \frac{450}{300}\sqrt{31{,}600} = 267 \text{ feet}$$

(2) Example 2. Is EED exposure within the maximum allowable power density, given the following conditions?

Actual measured power density = 450 W/m^2

Condition of EEDs: In nonmetallic containers. Frequency: 200 MHz.

(a) Step 1. Find the proper column and formula in table 6-1. Since the frequency is 200 MHz, the proper formula to determine maximum safe power density is:

$P_e = 4.256 \times 10^{-5} \times f^2$

(b) Step 2. Solve the equation.

$P_e = 4.256 \times 10^{-5} \times (200)^2$
$P_e = 1.7\ W/m^2$

Therefore, EEDs are being exposed to 450 W/m2 which is more than the computed maximum safe power density.

Table 6-1. Recommended EED Safe Separation Distances and Power Densities.

COLUMN	A	B		C	D		E	F
Configuration of EED	Unknown (Worst Case)	EED In Exposed Condition		EED In Storage or Transport			EED Installed or Onboard Aircraft	Leadless EED
				Metal Container	Nonmetal Container			
		Freq.	Formula		Freq.	Formula		
Recommended Separation Distance (or Formula for Distance)	Use Figure 6-1 or Column B	Up to 20kHz	$D=0.083\,x\sqrt{P_t G_t}$	$D=0.083x\sqrt{P_t G_t}$	Up to 63 kHz	$D=0.083\,x\sqrt{P_t G_t}$	$D=0.083x\sqrt{P_t G_t}$	D=10 Feet
		20kHz to 2MHz	$D=4.63f\,x\sqrt{P_t G_t}$		63 kHz to 2MHz	$D=1.46f\,x\sqrt{P_t G_t}$		
		2MHz to 48.5MHz	$D=8.26\,x\sqrt{P_t G_t}$		2 MHz to 48.5MHz	$D=2.93\,x\sqrt{P_t G_t}$		
		48.5MHz to 4.85GHz	$D=\frac{460}{f}\,x\sqrt{P_t G_t}$		48.5MHz to 1.53GHz	$D=\frac{142}{f}\,x\sqrt{P_t G_t}$		
		4.85GHz to 45GHz	$D=0.083\,x\sqrt{P_t G_t}$		1.53GHz to 45GHz	$D=0.083\,x\sqrt{P_t G_t}$		
Recommended Maximum Power Density	$P_o=0.01W/m^2$	Up to 20kHz	$P_o=100\,W/m^2$	$P_o=100W/m^2$	Up to 63kHz	$P_o=100W/m^2$	$P_o=100W/m^2$	Not Applicable
		20kHz to 2MHz	$P_o=\frac{0.04}{f^2}$		63kHz to 2MHz	$P_o=\frac{0.4}{f^2}$		
		2MHz to 48.5MHz	$P_o=0.01W/m^2$		2MHz to 48.5MHz	$P_o=0.1W/m^2$		
		48.5 MHz to 4.85GHz	$4.256\times10^{-6}\,x\,f^2$		48.5MHz to 1.53GHz	$P_o=4.256\times10^{-5}\,x\,f^2$		
		4.85GHz to 45GHz	$P_o=100W/m^2$		1.53GHz to 45GHz	$P_o=100W/m^2$		

NOTES:

1. In the above formulas:
   - D = distance (feet)
   - f = Frequency (MHz)
   - P_t = transmitter power (watts)
   - G_t = $\log^{-1}(G_{dB}/10)$ = power gain ratio of the transmitting antenna.
   - G_{dB} = antenna gain (decibels). G_{dB} should be considered 0 for omnidirectional antenna.
   - P_o = recommended maximum power density (watts per square meter)

a. Use peak power for the following:
   (1) Pulsed systems with pulse width greater than one millisecond.
   (2) Systems with modulation schemes other than pulsed.
   (3) Electrically conducting explosive composition type or carbon bridge type EEDs are involved.

Table 6-1. Continued.

b. For pulsed systems with all pulse widths less than one millisecond, use the larger of the following:

(1) Average Power.

(2) (Peak power) x (largest pulse width expressed in milliseconds)/one millisecond.

2. The formulas above assume an EED with a maximum no-fire sensitivity of 50 milliwatts.

3. P_tG_t is commonly referred to as the "effective radiated power" and includes antenna efficiency.

4. For frequencies outside the range of table 6-1, follow the procedures in paragraph 6-21h.

5. Formulas apply to the far field of the antenna only. For antennas with long focal lengths, see TO 31Z-10-4, chapter 4, section 2, for near field formulas.

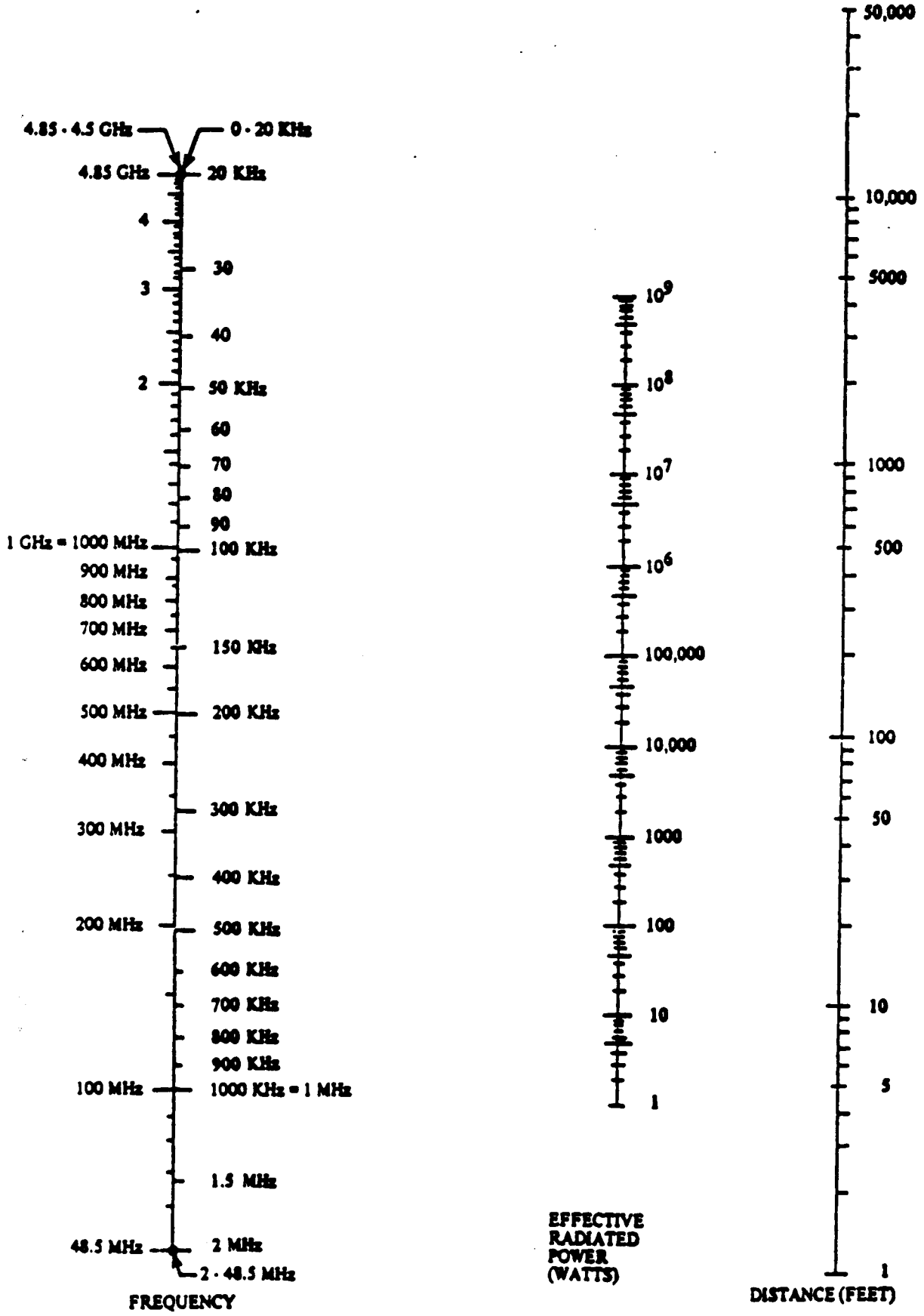

Figure 6-1. Recommended Safe Separation Distances for EEDs in Exposed Condition.

Chapter 7
TRANSPORTATION

7-1. General Information. This chapter gives safety requirements for transporting explosives and for safely operating vehicles and materials handling equipment in explosives locations. In-use ammunition items which must accompany security police or other defense forces are not governed by transportation rules; however, safety considerations should be applied to the extent possible as directed by the major commands (MAJCOM). Quantity-distance (Q-D) criteria does not apply to munitions and explosives in the transportation mode. However, caution must be taken to ensure minimum exposure of people and property during all phases of transportation.

7-2. Federal Regulation. Code of Federal Regulation (CFR) 49, Hazardous Materials Regulation, Transportation, regulates commercial shipment of hazardous material, including explosives, by rail, motor vehicle, cargo aircraft, and ship within the United States (except maritime explosives).

7-3. Basic Directives. The following directives apply to military shipments of hazardous materials within the Defense Transportation system:

a. The basic directives are AFRs 55-14, 71-4, 75-1, 75-2, and 136-4. AFR 71-4 regulates transportation of hazardous materials (including explosives) by military air, including contract air carriers. The Air Force 75-series regulations cover other phases of transportation. The TO 11N-45-series regulate the movement of nuclear weapons and their applicable components.

b. These regulations parallel the Code of Federal Regulation, but due to the many special items required by the Department of Defense (DOD) and the controlled transportation conditions within DOD, these items are assigned hazard classifications by the services according to TO 11A-1-47. Tests determine the item hazard and the related packaging and handling requirements. The military services coordinate in the hazard classification assignments and forward the pertinent classification data to DOT.

7-4. Applying Basic Directives. DOT and Department of Health and Human Services regulations, as such, do not apply to the movement of explosives beginning and ending within the confines of a given military base or installation. DOT regulations do not apply to any shipment of DOD munitions in DOD vehicles operated by DOD personnel. However, to promote safety, parts of these regulations have been adopted for use by the US Air Force, and are in this regulation where applicable.

7-5. Local Laws Regulating the Transportation of Explosives and Dangerous Articles. Each state and nearly all local and foreign governments have laws or ordinances regulating the transportation of explosives and other dangerous articles within their jurisdiction. The local laws must also be obeyed. Where there is a conflict, notify HQ AFISC/SEWV for clarification.

7-6. Hazard Classification Requirements. Explosives, to be acceptable for transportation by any mode, must have an assigned hazard classification (Q-D hazard class/division; storage compatibility group; DOT class, markings, shipping name and label; and United Nations (UN) serial number).

a. Developmental or test items without a final classification must be assigned an interim hazard classification. Procedures and authority for assigning both final and interim hazard classifications are in TO 11A-1-47.

b. Commercial explosive items purchased for official use that do not have a proper hazard classification must be assigned a hazard classification before transportation and use. See paragraph 2-8 for an exception for fireworks.

7-7. Mailing Prohibition. Explosives items, including those exempted under Title 49, CFR, Part 173.55, will NOT be mailed. Provisions and penalties of the US Postal Manual about "nonmailable" matter apply to the US Air Force.

7-8. Authorized Transportation. Government explosives will be moved only in an approved manner in acceptable military and commercial rail, air, or surface vehicles.

7-9. Compatibility of Explosives During Transportation. Items that may be shipped

in the same commercial railcar, motor vehicle, cargo aircraft, or vessel are listed in Title 49, CFR. These regulations are reproduced by the American Trucking Association (ATA) as ATA Hazardous Materials Tariff and the Association of American Railroads as Bureau of Explosives Tariff No. BOE-6000, Hazardous Materials Regulations of the Department of Transportation by Air, Rail, Highway, Water and Military Explosives by Water, Including Specifications for Shipping Containers. Cargo-configured items that may be shipped in the same Air Force aircraft are listed in AFR 71-4 and TO 11N-45-51. Compatibility criteria for the movement of DOD munitions in DOD vehicles operated by DOD personnel will be according to chapter 4.

NOTE: Nothing in this paragraph is to be construed to prohibit:

a. The development of new items in an increased state of assembly or the standardizing of an assembled version of existing items to meet approved military characteristics or requirements. Such items will be subjected to the normal hazard classification procedure (TO 11A-1-47).

b. The movement of assembled or partially assembled explosive items between servicing explosives locations and aircraft loading points or other such locations where necessary to meet valid operational requirements.

c. The movement of minimum quantities of explosive items necessary for demolition operations, to include proficiency training. Blasting caps, demolition explosives, and unserviceable (but not dangerous) munitions may be transported in the same vehicle, subject to MAJCOM control. Dangerously unserviceable munitions should be transported in a separate vehicle or, when this is not possible, segregated and sandbagged from other explosives being transported.

d. The movement of complete round (item) component loads when essential to meet operational requirements, and when separate (unmixed) movement is not feasible. (See AFR 71-4 or 75-2 for procedures where exceptions to such directives are required.)

7-10. Shipping Containers. Containers of explosives offered for shipment will comply with Title 49, CFR, Part 173, or AFR 71-4 specifications, as appropriate.

a. Locally made containers must meet the packing and marking specifications for the item being packed.

b. Each container must be marked to identify the contents; show the correct DOT marking, as well as other required markings. See TO 11A-1-46, AFR 71-4, TO 11N-45-51, or the triservice hazard classification listing, as appropriate.

c. If the item is not listed in the above references or if it must be shipped to a United Nations country, OO-ALC/MMWE, Hill AFB UT 84056-5609, should be contacted for the required data.

d. A container must not be opened or repaired in a railcar, motor vehicle, or aircraft unless it is essential for inflight safety or to safely unload a damaged container. If a container is damaged or defective, remove it from the transporting vehicle at the earliest opportunity for repair. If it is held for repair, it must be stored properly.

7-11. Shipment of Explosives Which Have Been Damaged or Failed to Function. If it is necessary to ship a "live" explosive item that has been damaged, subjected to abnormal force, or has failed to function, ask the cognizant AFLC (prime ALC) or AFSC element for shipping, packing, marking, and safety instructions.

a. The item must be judged safe for shipment (within the meaning of the normal DOT category for the material involved) before being offered for movement by a commercial carrier or transported over a public transportation system by a government conveyance. The shipment must be carefully packed and blocked to prevent movement and shock in transit.

b. Items containing a small quantity of explosives that is so constructed or packaged that the effects of an explosion are self-contained are excepted from this paragraph.

7-12. Guides for Controlling Incoming Explosives Shipments. Personnel concerned with the operation of aircraft and transportation of explosives must review the guidance in AFR 75-42 (Defense Logistics Agency Handbook 4510.3), Terminal Facilities Guide, United States Air Force. Notification procedures must clearly state the net explosives weight, by hazard class/division, that can be received at unloading facilities without violating approved explosives capacities. If amendments to this publication are needed, they must be processed promptly.

7-13. Damaged or Improper Shipments. Any shipment received in damaged or improper condition will be reported on SF 364, Report of Discrepancy, according to AFR 400-54. Transportation discrepancies will be reported on SF 361, Transportation Discrepancy Report, according to AFR 75-18. (Also see TO 11A-1-10.)

7-14. Selection of Operators. Operators of vehicles and equipment used in transporting and handling explosives will be carefully selected, physically fit, trained and tested in the operation of the type vehicle or equipment being used, and informed of the explosives hazards involved. AFR 77-4 contains additional instructions.

7-15. Explosives Movement Routes on Base. The safest possible primary and alternate explosives movement routes will be designated. Such routes will cover all phases of movement on base from the point of entry, storage, delivery to and on the flightline, etc. Routes and any limitations on quantities by hazard class/division of explosives will be set forth in base publications. Movement routes will avoid built-up areas and key, mission-oriented facilities and equipment to the maximum extent possible.

EXCEPTION: Movements of munitions within a munitions storage area or to and from licensed storage locations are not restricted to designated routes.

7-16. Temporary Storage:

a. DOT, AFR 71-4, or table 4-1 compatibility criteria will be used while explosives are in the transportation mode. Either of these criteria may also be used for the temporary mixing of explosives while undergoing packing and unpacking operations or while in temporary storage awaiting shipment. However, shipping, receiving, and storage facilities will comply with DOD Q-D criteria for the hazard class/division involved.

(1) Incoming shipments will be moved on or be sent to proper storage with a minimum of delay.

(2) The assembly of outgoing shipments should be scheduled to reduce to a minimum the holding time in the shipping and receiving building.

b. Rooms, other than those exempted under paragraph 4-10, used for the storage of explosives awaiting shipment will be separated from other rooms by substantial dividing walls.

c. The total quantity of explosives in buildings, on loading platforms, and on transporting vehicles will be used to determine Q-D requirements to other facilities.

7-17. Vehicle and Materials Handling Equipment General Safety Requirements:

a. Passengers:

(1) No person will be allowed to ride on, or in the cargo compartment of, a motor vehicle transporting explosives.

(2) Passengers may ride in compartments that do not contain explosives if they can be safely seated.

(3) Explosives will not be transported in a passenger compartment of a vehicle.

EXCEPTIONS:

1. Under certain conditions, the minimum essential personnel and limited quantities of class/division 1.4, 1.3, and (04) 1.2 explosives, as approved by a local OI, may be transported together in the cargo portion of vehicles (including "Metro" types used on flightlines) or in vehicles used as runway supervisory unit (RSU). Additionally, basic load munitions issued to security police personnel in the performance of their duties are exempt from these requirements. However, transportation of resupply stocks must comply with all the requirements of this paragraph. These conditions are:

a. Explosives must be packed separately from other items and packed in closed, clearly identified, metal or wooden containers properly secured in the vehicle body.

b. Seats must be provided for personnel.

c. Smoking in the vehicle must be prohibited or controlled as prescribed in paragraph 2-13b.

d. Explosives-laden vehicles must not be left unattended.

e. Aircraft seats or survival kits with explosive devices installed must contain all of the required safety pins and devices, and all seats or survival kits must be secured to prevent movement during transit.

2. When units responsible for demolition operations are issued vehicles without separate cargo compartments, such as Highly Mobile Motorized Wheeled Vehicles (HMMV), in lieu of vehicles with separate cargo compartments, such vehicles may be used to transport minimum quantities of explosives necessary to support demolition operations.

this code will neither be allowed in explosives areas or locations nor be used in transporting explosives.

i. Safety Chains. Safety chains will be fastened between towing vehicles and trailers carrying explosives when lunette and pintle fastenings are used. Safety chains are not required when other types of specifically designed "breakaway control" safety features, as prescribed by the pertinent TO, are used.

j. Storage. Battery, gasoline, or diesel-powered equipment may be stored in a magazine, storehouse, or other suitable location that contains only inert materials.

(1) The equipment should be at least 10 feet from any combustible material.

(2) Aisles will be kept clear at all times and individual pieces of equipment stored should be spaced to minimize the spread of fire from one unit to another.

(3) Equipment may be parked in fire-resistive buildings containing explosives, providing such equipment is essential to day-to-day operations. However, the following minimum requirements must be met:

(a) Equipment must be stored in an area that is suitably and completely separated (by fire walls and closed doors) from the bays, rooms, or cubicles that contain the explosives.

(b) Designed fire-resistant ratings for the enclosures containing explosives are not degraded.

(c) Battery charging should not be done. However, where it is essential, venting will be provided, and the operation will be monitored to prevent overcharging.

(d) Safety and fire protection personnel review the local situation for any additional measures necessary to enhance safety.

(e) Base commander approval has been granted.

(f) Detailed safety rules or conditions are available to the immediate supervisors or posted in the parking area.

k. Operating Inside Structures. Hazardous concentrations of exhaust fumes can develop within 20 minutes from operating a properly serviced forklift inside a structure the size of a 60-foot igloo with the door open. Commanders and supervisors must ensure mission requirements are met without exposing workers to unsafe levels of these fumes. Exhaust fans, respirators, or alternate mechanical or electrical lifting devices may be needed. If gasoline or diesel-powered vehicles or equipment are operated inside buildings, the following precautions will be taken:

(1) The concentration of carbon monoxide in the operating area must not exceed the current threshold limit value (TLV). Consult the local environmental health services for a determination of time-weighted TLVs and short-term maximum exposure limits. Exhaust purifiers are authorized where necessary to reduce carbon monoxide concentrations in locations where ventilation is inadequate (AFOSH Standard 161-2).

(2) The base bioenvironmental engineer will periodically check the area to monitor the adequacy of ventilation and recommend methods to control the hazard.

7-18. Battery-Powered Materials Handling Equipment. Battery-powered equipment is preferred for handling explosives and should be used when possible.

a. Battery-powered equipment used within an explosives area will have all electrical cables mounted to prevent catching on stationary objects or damage by cutting or abrasion. Cables will be protected to prevent short circuiting as far as is practicable.

b. Batteries will be securely fastened. Battery boxes will give ample ventilation, with ventilation openings that prevent access to the cell terminals from the outside.

c. Battery-powered equipment must be equipped with a dead-man switch and a main service switch that can be operated from the driving position.

7-19. Gasoline or Diesel-Powered Materials Handling Equipment Safety Precautions:

a. Equipment for handling materials within an explosives storage area will be equipped with a standard muffler and air cleaner.

b. Gas caps must be in place.

c. If necessary, a deflector plate will be installed to prevent overflow from the fuel tank from reaching the motor or exhaust pipe.

d. On gravity feed fuel systems or on pump systems that can be siphoned, an emergency shutoff valve will be installed at the fuel tank, or in the feed line.

e. Fuel lines will be protected from rupture due to vibration.

f. All electrical connections will be securely fastened to prevent accidental disconnection which might result in sparks or fire.

g. This equipment will not be used in areas which are classified as hazardous locations for electrical equipment (paragraph 6-2a).

7-20. Motor Vehicle Transportation:

a. General Information:

(1) Existing specially designed equipment for explosives and specific weapons should be used where possible or required.

(2) Cargo-type trucks and tractor-drawn semitrailer vans are preferred for the general transportation of explosives. Other types of vehicles should not be used unless the items involved make handling by cargo vehicles or vans impractical. Cargo will be properly secured, regardless of the transportation used.

(3) Vehicle batteries and wiring will be located so that they will not come in contact with containers or explosives.

b. Vehicle Body. Exposed ferrous metal in the cargo compartment will be covered before transporting any explosives which are not packaged in DOT specification containers or equivalent. If tops or coverings are needed, they should be of a noncombustible or flameproof material.

c. Red Lights. Red lights will not be used on the front of vehicles transporting explosives on or off base. A security police vehicle may use a flashing red light on and off base when escorting a convoy unless prohibited by local law.

d. Inspection of Vehicles. Motor vehicles used to transport explosives will be inspected before use to determine that:

(1) Fire extinguishers are filled and are in good working order.

(2) Electric wiring is in good condition and properly attached.

(3) Fuel tank and piping are secure and not leaking.

(4) Mufflers and spark arresters, when applicable, meet military specifications and are properly installed and clean.

(5) LP-fueled vehicles comply with the National Fire Codes.

(6) Safety chains or other breakaway control devices are properly installed, if applicable.

(7) Brakes, tires, steering, and other equipment are in good condition and tires are properly inflated.

(8) Exhaust system is free of oil, grease, and fuel.

e. Operating Requirements. Ensure safe operation of vehicles transporting explosives. The following applies:

(1) Use wheel chocks (in addition to brakes or gears as prescribed for the specific vehicle) while loading or unloading, or for explosives loaded vehicles and trailers parked, on any grade or ramp steep enough to cause the vehicle to roll.

(2) When it is necessary to transport explosives on routes where ferryboats, tunnels, or toll bridges will be encountered, ask local or state officials what procedures must be followed to comply with their regulations.

(3) If a motor vehicle containing explosives is to use a ferryboat or other passenger-carrying vessel, give the driver an identification letter, signed by an officer, requesting transportation on the vessel. The letter will be presented to the master of the vessel or his or her representative. The letter will refer to the bill of lading (copy of which will be in the possession of the driver) and will state the truck license number and the name of the owner (CFR 49).

(4) Refuel trucks before loading explosives. Trucks containing explosives should not be refueled within an explosives area of an installation, including refueling from mobile units. A central refueling station should be used. Trucks should be refueled before loading explosives.

(5) Do not load or unload explosives from a motor vehicle while the engine is running, except under the following conditions:

(a) Where the engine is required to provide power to vehicle mechanical handling equipment used in loading and unloading the vehicle.

(b) Where necessary for emergency operations or timing for exercises simulating execution of emergency plans. In this case, small loads or packages of explosives, requiring only momentary unloading time to be delivered to aircraft on the flightline, may be removed from a vehicle while the motor is running.

(c) Engines of diesel-powered vehicles may continue to run during loading or unloading of explosives except when exposed explosives are involved.

(d) When the vehicle engine is being operated under (a), (b), or (c) above, the following conditions apply:

1. Ensure adequate ventilation is provided to prevent unnecessary build-up of exhaust gases.

2. Equip the vehicle with spark and flame arresters where necessary according to paragraph 7-17g(2).

3. Only keep the vehicle at the aircraft or storage location as long as needed to complete the explosives loading or unloading operation. If a delay occurs, the vehicle must be moved away from the location.

4. Ensure the vehicle operator sets the brakes and remains in the driver's position; or sets the brakes, chocks the wheels, and remains close to the vehicle.

(e) Where the vehicle was designed and built for these operations. Refer to the drivers manuals for accepted procedures.

(6) Do not operate vehicles containing explosives until the cargo has been checked to ensure safe transportation. **Explosives containers will be loaded, blocked, braced, tied down, or otherwise secured to the vehicle to prevent movement.** Load securing methods must not damage explosives or containers. Vehicles will have sideboards and tailgates as high as the load. These are not needed where item size would make such protection impractical (b above) or where the vehicle is specially designed or adapted for the item and the load is securely held.

(7) When transporting items containing EEDs, fully consider the hazards discussed in paragraph 6-21 where vehicles are equipped with transmitters or other electromagnetic radiation sources which may create exposures on the routes to be traveled.

(8) **Do not leave explosives-laden vehicles unattended unless they are parked in a properly designated area,** such as the weapons storage area, holding yard, or ready munitions area.

(9) Ensure forklifts use skids or pallets to transport containers of explosives, except when containers are designed with fully enclosed stirrups (360 o) for forklift tines.

(10) Unfused weapons may be carried on forklift forks when the weapon body is long enough to be firmly supported on both forks and strong enough to prevent damage.

f. Off-Base Explosives Shipments:

(1) Inspection of Incoming Shipments. All incoming motor vehicles carrying DOT Class A and B explosives and poisons will be inspected at a designated inspection station by a representative of the commander.

(a) The inspection station should be as remote as practical from hazardous areas such as explosives or POL sites, populated areas, and flightlines.

(b) If the inspection station is used as a temporary explosives storage or operating location, it must meet Q-D criteria. Also, vehicle inspections must be stopped while storage or operations are in progress.

(c) The inspection station may be used as an interchange yard ((4) below).

(d) Inspections will be done according to AFR 75-2, using DD Form 626, Motor Vehicle Inspection (Transporting Hazardous Material).

(e) Once a vehicle has passed the initial inspection, a visual inspection of the external condition of the cargo may be done at any suitable location, including the unloading point.

(f) Any vehicle found or suspected to be in a hazardous condition will be moved to a "suspect vehicle" area which is isolated from other locations by the proper Q-D, unless it is more hazardous to move the vehicle. If use of the suspect vehicle area is very infrequent, an event waiver as specified in paragraph 11-2f may be used if Q-D cannot be met. Prompt corrective action or a detailed inspection will be done at this location to ensure that the vehicle and cargo are safe enough for further movement.

(2) Inspection of Outgoing Shipments. All vehicles to be used for off-base shipments of explosives will be inspected by shipping activities before and after loading for compliance with safety regulations.

(a) DD Form 626 will be filled out according to AFR 75-2.

(b) A record will be kept of the vehicle number, the type of explosive cargo, and the number of each seal applied to the vehicle.

(c) Drivers must be thoroughly familiar with the DOT Motor Carrier Safety Regulations.

(d) DD Form 836, Special Instructions for Motor Vehicle Drivers, will be used to instruct drivers on the nature of their cargo, firefighting methods, and other specific precautions for the particular shipment. Information on the preparation and use of DD Form 836 is in AFR 75-2.

(e) Overseas units should use bilingual instructions on the DD Forms 626 and 836 where needed.

(f) Where special purpose vehicles are authorized to transport explosive loads, applicable technical data will be used.

(g) Use of DD Forms 626 or 836 is not required for military vehicles or drivers transporting explosives (assembled or partially assembled in a delivery mode) across or on public highways from one part of a base to another. For example, transportation of munitions from

12-30-1993 10:25AM FROM 27 CES/CEV CANNON AFB NM TO 9750582743 61 P.02

a preparation area across the highway to the main base flightline, or on the highway to a nearby auxiliary field. If this is a daily operation, there should be an agreement with local authorities on any local restrictions to be imposed. Driver qualification and motor vehicle inspection requirements of paragraphs 7-14 and 7-20d apply.

(3) Internal Shipments by Commercial Carrier. Commercial carriers used to move explosives over public highways from one area to another area of an installation will be externally inspected before entering the second area. This is not needed if they were escorted or under surveillance en route.

(4) Interchange Yards. Where necessary, an interchange yard may be established in a remote area on the same basis, or together with the inspection station in (1) above. This location will be used for the exchange of tractor trailers between the common carrier and the base activity involved. Explosives Q-D criteria will not be applied if the exchange is made and the vehicles removed promptly.

g. Holding Yards. If the explosives-loaded vehicles cannot be dispatched to unloading points immediately, they must be moved to a holding yard.

(1) The holding yard must be sited to meet Q-D criteria according to chapter 8.

(2) Where possible, explosives-loaded vehicles should be separated from each other by the applicable aboveground magazine distance.

(3) If magazine distance between vehicles cannot be met, vehicles should be parked in groups, with magazine separation between each group. Distances to other exposures will then be based on the total amount of explosives within a group of vehicles.

(4) Where neither (2) nor (3) above is possible, the total explosives weight of all vehicles will be used to determine separation distances.

(5) Loaded vehicles should not remain in a holding yard for a period exceeding 24 hours.

(6) Holding yards may be used for interchange and inspection activities. However, when loaded vehicles are being held there, the yard may not be concurrently used for vehicle inspections.

h. Maintenance of Vehicles Carrying Explosives:

(1) Only operator inspection and maintenance normally related to the operation of a vehicle will be done on explosives-laden vehicles. Such maintenance includes servicing with fuel, oil, air, lubrication and water, changing tires, fuses, hoses and drive belts, etc.

(2) No maintenance will be done on an explosives-loaded vehicle or trailer that would increase the probability of fire or would require the use of heat-producing equipment.

(3) No restrictions are imposed on tractor maintenance when the tractor is physically separated by at least 50 feet from an explosives-loaded trailer.

(4) When tires are being changed, the vehicle or trailer must not be elevated so as to shift the load or place an excessive strain on the tiedowns.

(5) Vehicles carrying nuclear weapons are also subject to the maintenance restrictions in TO 11N-45-51.

7-21. Transporting Dangerously Unserviceable Explosive Items for Disposal:

a. Dangerously unserviceable items such as partially burned signals, markers, etc., should be packaged and marked as specified in item technical publications or EOD publications. In some cases, the training and experience of EOD supervisors and unique hazards of a specific situation may dictate modifying the packaging. Authorization for modifying procedures is in TO 00-5-1.

b. It is not intended that only EOD personnel can transport these items; however, EOD should be consulted before transporting any dangerously unserviceable items other than as approved by DOT. Any DOD personnel who are properly trained in procedures to be followed and specific hazards of the material may routinely transport explosive item residue.

7-22. Railroad Transportation. DOT safety regulations for safety devices, safeguards, design of equipment, etc., are mandatory for railway equipment transporting materials outside an installation. These regulations should also be followed within an installation. Special attention should be given to rail clearances to buildings, loading docks, overhead lines, etc.

a. Locomotives. Portable fire extinguishers will be carried on all locomotives and other self-propelled rail vehicles.

b. Track Layout. Railroad lines serving explosives areas should be looped to give at least two ways of exit.

c. Movement of Railcars Containing Explosives:

12-30-1993 10:25AM FROM 27 CES/CEV CANNON AFB NM TO 9750582743 61 P.03

(1) By Engine. Before any movement of one or more cars containing explosives, the load will be secured and the air brakes will be cut-in. Cars should not be uncoupled while in motion or pulled apart by locomotive power. Safety precautions will be observed in breaking air hose connections.

(2) By Car Mover. An individual must be stationed at the hand brake during any manual movement of a car.

d. Spotting Railcars:

(1) When single cars are spotted, the hand brakes will be set and the wheels properly chocked. When more than one car is spotted and the engine detached, the hand brakes will be set on enough cars of a cut of cars to ensure adequate braking is provided. The hand brakes will be set on the downgrade end of the cut of cars. Do not rely on the automatic air brakes to hold spotted cars.

(2) Locomotives will not stop in front of buildings and loading docks containing hazardous materials longer than needed to "spot" cars for loading or unloading.

(3) Cars at a magazine or building should be located so that personnel may evacuate the building or car rapidly if necessary.

e. Switching Railcars. Special care will be taken to avoid rough handling of cars.

(1) Cars must not be "cut off" while in motion. Cars will be coupled carefully to avoid unnecessary shocks. Other cars will not be "cut off" and allowed to strike a car containing explosives.

(2) Cars will be placed in yards or on sidings so that they may be removed from danger of fire quickly and so that they will be handled as little as possible. They will not be placed under bridges or alongside passenger sheds of stations. Engines on a parallel track should not be allowed to stand opposite or near them.

(3) "Dropping," "humping," "kicking," or use of the "flying switch" is prohibited.

f. Marking Railcars with Blue Flags or Signals. Blue flags or signals will be placed at both ends of a car or cut of cars when personnel are working in, on, or under the cars. Cars marked in this manner will not be coupled to or moved. The supervisor or foreman in charge of the personnel loading or unloading the cars will be responsible for placing and removing the blue flag or signal. Train crews will be informed of the use of blue flags or signals.

EXCEPTIONS:

1. Flags are not required when flat cars are involved and the presence of a working party is clearly evident.

2. Flags or signals may be omitted from the end of a car located against or toward a dead end spur. This also applies to a loading ramp where no other rolling stock can approach from that direction.

g. Control of Vegetation Along Railroad Right-of-Way. Vegetation along the railroad right-of-way which presents a fire hazard to explosives-laden cars will be controlled on the base as directed in paragraph 3-6.

h. Loading Railcars. When a car arrives, it should be inspected thoroughly, inside and out, to determine its suitability to carry the type of explosives involved. The interior of the car should be "broom clean" before explosives are loaded into it.

(1) Protruding nails and bolt heads should either be removed or covered to prevent the packages from being damaged. Substantial gangways should be provided. Any obstructions that may prevent free entry to the car should be removed. The immediate area should be cleared of leaves, dry grass, and other flammable materials.

(2) During loading operations, the car and magazine doors should be closed when engines or speeders are passing.

(3) Cars should not be left partly loaded unless it is impossible to finish loading at one time. In this case, car doors will be securely locked. If it becomes necessary to move a partially loaded car before loading has been completed, the load will be braced.

(4) During and after loading, the shipment should be properly braced and stayed, the car properly sealed, and a permanent record of car numbers kept.

i. Loading and Bracing Guidance. When loading freight cars, consult Bureau of Explosives Pamphlets 6 and 6A for guidance unless specific instructions or car loading drawings are available for the items involved. These pamphlets govern the method of loading, staying, and bracing of carload and less than carload (LCL) shipments of explosives. Refer to Bureau of Explosives Pamphlet 6C for guidance in securing truck bodies or trailers on flat cars. Also see this pamphlet for loading, blocking, and bracing of the cargo within, or on, such vehicles or containers. The carrier or cargo must not shift under an impact of 8 miles per hour from either end. Bureau of Explosives pamphlets

12-30-1993 10:26AM FROM 27 CES/CEV CANNON AFB NM TO 9750582743 61 P.04

may be obtained by writing: Bureau of Explosives, 50 F St NW, Washington DC 20336.

j. Placarding of Railcars. Railcars transporting explosives will be placarded according to paragraph 7-17b or those of the host nation involved.

(1) Placards will be displayed when the first container of explosives is loaded in the railcar. Placards will be removed when the last container of explosives is removed from the railcar. Four placards are required for each railcar. It is the responsibility of the shipper to furnish the needed placards.

(2) Commanders may omit placards on conclusion of suitable arrangements with the host nation or governmental agency involved, where necessary, to avoid attention of hostile forces. All involved (including essential train crews) must be instructed in proper emergency actions.

k. Railcar Requirements. Cars used for the shipment of material requiring placarding under Title 49, CFR, Part 172, must meet standards for the class of material being shipped as specified in Title 49, CFR, Part 172. Cars for DOT Class A explosives will be inspected before and after loading. Car certificates will be accomplished, distributed, and affixed to cars according to Title 49, CFR, Part 174.104.

l. Leaking Packages in Railcars. A constant alertness will be maintained to detect leaking packages or leaking tank cars.

(1) Leaking packages should be removed from cars and repaired. In the case of tank cars, the contents should be transferred. Leaking tank cars containing compressed gases should be switched to a location distant from habitation and highways and action taken to transfer contents.

(2) Cars containing leaking packages or leaking tank cars will be protected to prevent ignition of liquid or vapors.

(3) Movement of a leaking car will be held to a minimum until the unsafe condition is corrected. If artificial light is necessary, only approved explosion proof electric lights should be used.

m. Tools for Loading and Unloading Railcars. Steel tools may be used inside cars with reasonable care if explosives that are subject to initiation are not exposed. When explosives subject to initiation are exposed, special care will be taken to prevent sparks.

n. Sealing Railcars. Cars containing explosives will be sealed with railway-type car seals on which is stamped an identifying number. The shipper will keep a record of car numbers and seals (see AFR 75-2 for additional car seal regulations). If the seal is not in place when the car is received, the car will be thoroughly inspected at a suspect car site.

o. Changing Car Seals. When a car seal is changed on a car of explosives, a record will be made showing the following information:

(1) Railroad.

(2) Place.

(3) Date.

(4) Number or description of seal broken.

(5) Number or description of seal used to reseal car.

(6) Reason for opening car.

(7) Condition of load.

(8) Name and occupation of persons opening car. This record will be shown on waybill or other form or memorandum that accompanies car to destination.

p. Inspection of Incoming Loaded Railcars:

(1) Railcars containing explosives will be inspected by a competent representative of the commander at a designated inspection station.

(a) The inspection station should be as remote as practical from any hazardous or populated area. It should not be near any POL sites, other explosives locations, and flightlines.

(b) The outside and underside of each car must be inspected to detect damage (such as defective brakes, couplings, wheel flanges, or hot boxes) or unauthorized and suspicious articles. Check individual car numbers and seal numbers against bills of ladings.

(c) Such inspections may be done from ground level if pits are not available. If sabotage is possible, an inspection pit should be provided.

(d) If rail traffic is heavy enough or in an emergency, a pit will help in inspecting and moving cars rapidly.

(2) Cars of explosives will be isolated for prompt corrective actions when foreign and suspicious articles have been attached outside or underneath the car. They will also be isolated when they have a defect that could affect the safety of the installation or contents of the car.

(a) Unless the problem prohibits, the car will be moved over the safest route to a location separated from other areas by proper inhabited building distances.

(b) Before the car and cargo are released from the designated "suspect car" site, the unsatisfactory conditions will be corrected unless a determination is made that they are safe to move.

12-30-1993 10:27AM FROM 27 CES/CEV CANNON AFB NM TO 9750582743 61 P.05

(3) If the seal numbers on a car do not correspond to the numbers shown on the bill of lading, the car must be treated as a suspect car. Remove it to the suspect car siding for additional inspection, as under (2) above.

(4) Visual inspection of the external condition of the cargo in cars that pass the initial inspection may be done at any suitable place, including the unloading point. Such cars may be considered reasonably safe. However, care should be exercised in breaking seals and opening doors because of the possibility of shifting lading or leaking containers.

(5) If warranted by the inspection results, cars at the inspection station will be moved promptly from the site.

(6) The inspection station will not be used as an explosives location or holding yard unless Q-D criteria are applied. However, the inspection station may be used as an interchange yard (q below).

(7) Commercial carriers used to move explosives through a public access route, from one area to another area of the installation, will be externally inspected before entering the second area. This is not needed if it was escorted or under surveillance en route.

q. Rail Interchange Yards. Rail interchange yards are set up and operated on the same basis as truck or trailer interchange yards. The rules in paragraph 7-20f(4) apply.

r. Rail Holding Yards. If the car cannot be dispatched immediately to the point where it is to be unloaded, it may be moved to a holding yard. Rail holding yards, where required, are set up and operated on the same basis as holding yards for motor vehicles. The rules in paragraph 7-20g apply. In developing large holding yards, consider the following layout guidance:

(1) Rail holding yards should be laid out on a unit car or explosives weight group basis. (For example, 50,000, 100,000, or 250,000 net pounds of class/division 1.1 explosives, regardless of the number of cars involved). Each such explosives quantity car group will be separated from all other groups by intermagazine distance.

(2) Yards may be formed by two parallel ladder tracks connected by diagonal spurs or by a "Christmas tree" arrangement (a ladder track with diagonal dead-end spurs projecting from each side at alternate intervals). Other arrangements tailored to the operation are allowed. However, parallel tracks and spurs of all types will be separated by intermagazine distances for the group quantities of explosives involved.

s. Classification Yards. A classification yard may be established primary for receiving, classifying, switching, and dispatching explosives-laden rail cars, where the volume of rail traffic necessitates. These rules apply:

(1) Intermagazine Q-D separation is required, as a minimum, between explosives locations of all types and the classification yard.

(2) Car inspection station activities under p above may be done in classification yards, if such yards are remotely located according to the cited paragraph.

(3) Interchange yard activities under paragraph 7-20f(4) and g may be done in classification yards, if such yards are remotely located according to the cited paragraphs.

(4) Cars may be opened in the yard for removing documents or for visual inspection of the external condition of the cargo if the entrance can be done in the normal manner. Freeing or repairing a stuck or damaged car door or doing any work inside a car is prohibited unless Q-D requirements can be met.

(5) The Q-D criteria other than in (1) above do not apply to a classification yard used exclusively for the purposes outlined above. If yards are used for other purposes (such as placing or removing dunnage or explosive items into or from cars), Q-D criteria will apply.

t. Trailers on Flat Cars (TOFC) or "Piggyback" Explosives Loading and Unloading Sites. This transportation method is considered a "change-of-mode" during loading or unloading operations. It requires only the use of good judgment in the site choice and proper control of operations in the local environment. The following criteria govern the siting and use of explosives TOFC railheads.

(1) Location will be as remote as practical from hazardous or populated areas. Clear zones should be maintained around these sites as outlined in paragraph 8-10 to prevent encroachment.

(2) Facilities will be adequate for the operation, and safe loading or unloading ramps will be designated.

(3) Loading or unloading operations will be controlled to reduce exposures to a minimum.

(4) Trailers will be removed quickly from the railroad car and sent at once to their destination or scheduled for prompt loading on arrival at the site. If there is an unforeseen delay in loading or unloading, an explosives-loaded

12-30-1993 10:28AM FROM 27 CES/CEV CANNON AFB NM TO 9750582743 61 P.06

trailer may be kept at the site for a short time. This holding period will not exceed 24 hours.

(5) Piggyback shipping trailers and containers will not be opened at the site unless an emergency or suspected emergency situation necessitates.

EXCEPTION: "Shipping and Storage Containers, Ballistic Missile" (SSCBM) received by TOFC may be opened at the site only for inspection and road transport preparation as required by pertinent TOs.

(6) Adequate tie-down of trailers to railcars and blocking and bracing of the explosives in the trailer to ensure cargo stability in transit is essential.

(7) All of the safety rules in this chapter on explosives-laden motor vehicles and their operation will be applied.

(8) The provisions of Bureau of Explosives Pamphlet 6C apply to explosives "Piggyback" operations (lists railcars and hitches approved for TOFC service).

(9) Operations other than the foregoing are not to be done on explosive items or explosives-laden containers, trailers, cars, etc., unless Q-D criteria can be met.

u. Inspection of Outgoing Empty Railcars. Cars transporting explosives will be inspected after unloading to make sure that they are clean and free from loose explosives and from other flammable materials. Ensure that placards and car certificates are removed.

7-23. Movement of Explosives Shipments by Air. Air transportation of explosives by commercial aircraft is regulated by Federal Aviation Administration (FAA) regulations which are now incorporated into Title 49, CFR. Instructions about explosives-laden military aircraft (and certain DOD contract airlift operations) are in AFRs 71-4 and 55-14, the applicable aircraft TO, and other parts of this regulation.

7-24. Transportation of Explosives by Water. Transportation of explosives and other hazardous materials by water in vessels engaged in commercial service is regulated by the United States Coast Guard. Shipments overseas will be made according to the regulations of the carrier, the United States Coast Guard, or the Department of the Army.

12-30-1993 10:29AM FROM 27 CES/CEV CANNON AFB NM TO 9750582743 61 P.07

Chapter 8

SITE PLANS, CONSTRUCTION, AND UTILITIES

8-1. General Information. This chapter provides criteria for use by civil engineering, safety, and other personnel when planning to build, modify, expand, site plan, or use facilities and locations where explosives are involved. Site plans are normally prepared by the installation civil engineer in coordination with the facility user and installation explosives safety personnel.

Section A—Explosives Site Planning

8-2. Basic Guidance:

a. Site plans for explosives related facilities and any facility to be located in established explosives clear zones must be submitted through engineering and safety channels to the DOD Explosives Safety Board (DDESB), for review and approval. **The DDESB will not approve site plans which do not meet all safety standards. Units requesting site plan approval under these conditions must include an exemption request with the site plan package (chapter 11). The Secretary of the Air Force must certify the operational necessity of the facility for the site plan to be acceptable.** Where the unit is uncertain if a site plan is required, either submit a site plan or request clarification from the MAJCOM safety staff.

b. When construction is not involved (e.g. change in facility use), but a waiver or exemption is necessary, the site plan must be submitted through command channels to HQ AFISC/SEWV, Norton AFB CA 92409-7001, for resolution.

c. Site plans may be submitted in one or more increments, depending on unit needs and the stages of construction plans and facility designs. Preliminary or location plans can be used to gain DDESB approval of Q-D standards only for the project. Final site plan approval can be requested later when facility design has progressed to the point where safety features are known and included in the design drawings.

d. Site plans need not be submitted when increased storage capacity results from changes in storage criteria and there is no increase in the established clear zone, or an increase in exposed sources. No action is required when clear zones are reduced because of criteria changes. Notify MAJCOM weapon safety of these changes. Site plan historical documentation will be maintained according to AFR 12-50, volume II. Normally this documentation will be retained until the explosives mission is terminated by higher headquarters.

e. Small miscellaneous structures, such as paint lockers and storage sheds, for nonexplosive support items that meet the separation criteria of paragraph 5-14 do not require site plan submittals.

f. To preclude unnecessary expenditure of resources, construction of facilities and locations requiring a site plan will not begin until the site plan is approved. Exceptions to this restriction will be on a case-by-case basis with requests processed through safety channels.

g. Vehicle inspection and suspect areas do not require site planning. These locations should be isolated as much as possible, and exposures in the area restricted to avoid encroachment. Any vehicle containing explosives suspected of being in a hazardous condition should be isolated consistent with applicable withdrawal distances given in chapter 3.

8-3. Site Plans Requiring AFISC Approval. The following conditions require submitting site plans to HQ AFISC/SEWV, Norton AFB CA 92409-7001, for approval:

a. Construction of a facility for explosives operations and or storage, regardless of class/division.

b. Explosives operations that do not involve construction but require explosives separation standards as outlined elsewhere in this regulation.

c. Licensed locations when NEW limits for operations exceed authorized limits.

d. Construction of nonexplosives facilities or operations within an established explosives clear zone.

e. Mission or facility use changes which result in increased exposure to hazards of explosives and ammunition. For example, when a military-use-only airfield is changed to joint-use, or when a facility sited for 1.2 explosives is changed to store 1.1 materials.

f. Contingency plans requiring the use of munitions or explosives other than those outlined in paragraphs 4-10 and 5-23, will be site planned as follows:

12-30-1993 10:29AM FROM 27 CES/CEV CANNON AFB NM TO 9750582743 61 P.08

(1) If time and circumstances permit, site plans will be prepared and submitted as outlined above.

(2) Tentative site plans should be based on known munitions requirements (prepackaged, prepositioned, or predirected items), explosives safety and Q-D requirements, site surveys, and available maps and photographs. Augmenting and augmented commands should develop and coordinate typical storage area layouts for the types of operations called for in contingency plans. (See paragraph 1-8 for other contingency requirements.)

(3) In the absence of a formally approved site plan, the command tasked to operate the contingency location will forward a copy of the tentative site plan to HQ AFISC/SEWV, Norton AFB CA 92409-7001, within 7 days of the contingency base activation.

(4) If a war or contingency operation require use of a location for which a tentative site plan has not been developed, the command tasked to operate the location will:

(a) Notify HQ AFISC/SEWV by immediate message of the following:

1. Location of one or more operations.

2. Types of operations to be conducted.

3. Types and quantities of munitions to be stored and handled.

4. Unusual or unique hazards and considerations.

5. Name and telephone number of weapons safety personnel and senior munitions personnel.

(b) As soon as possible, forward a scaled aerial photograph or equivalent site drawing showing, as a minimum:

1. Planned and in-use munitions storage sites and holding areas. Include class/division and NEWs for each location or facility.

2. Aircraft parking areas to include explosives loaded combat spots and support aircraft, or nonexplosives loaded ones.

3. Fuel storage sites.

4. Off-base exposures.

(c) If operations last more than 30 days, formal site plans will be developed as soon as practical by the command tasked to operate the location.

g. Construction of contractor-owned and operated facilities on Air Force property, contractor operated, government-owned facilities, or contractor facilities storing or processing government-furnished explosives.

h. Facility use changes affecting long-term reduction of clear zones.

i. Explosive loaded aircraft parking locations when initially planned or established, and when established NEW limits must be increased. Siting is not required for locations in use before April 1986, or when only those items exempt under paragraphs 4-10 and 5-24c are involved.

j. Facility use changes which result in a different, or more hazardous operation, within the facility or site. For example, converting a conventional bomb buildup facility to a missile assembly and checkout operation would require a site plan because of the nature of the operation and different safety precautions involved.

k. Increased storage at existing facilities which causes an increased clear zone.

8-4. Weapons Ranges. These facilities do not require site plans under this regulation, unless located within the clear zone of an explosives location. See AFR 50-46. Combat arms training and explosives demolition ranges require siting as outlined in paragraph 8-6 and chapter 8, section C.

8-5. Facility Modifications. Existing facilities may be modified as needed to meet changing mission requirements. Unit and MAJCOM safety staffs must work closely with civil engineers and users, to ensure safety standards are not compromised. The following rules apply to these modifications:

a. Modifications of facilities not covered by a waiver or exemption. These actions may be approved at MAJCOM, or delegated to a subordinate level provided the following rules are observed:

(1) Modifications must not cause additional hazards or reduce the effectiveness of built-in safety features of the building.

(2) The facility and its occupants/contents must be mission essential and related to the potential explosion site. For example, if a maintenance and inspection facility, sited at K18 is to be modified, a site plan will not be needed if only K18 authorized people are exposed after the modification.

(3) The modification must not change the nature of the operations or cause additional hazards. For example, the modification of a conventional bomb buildup facility to handle chemical bombs or missile refueling/defueling

12-30-1993 10:30AM FROM 27 CES/CEV CANNON AFB NM TO 9750582743 61 P.09

would require a site plan since specific safeguards and protective equipment are required.

(4) The modifications must not require congressional, NATO, or host nation funding.

(5) If the modification is designed to reduce the required quantity-distance separation standards, a site plan must be submitted.

(6) Modifications must be limited to internal areas only. External modifications that increase the overall floor space, such as room additions, will require a site plan.

b. Modifications of facilities under waiver or exemption.

(1) Facilities covered by a waiver or exemption will require HQ AFISC/SEWV review. The final approval authority will be determined on an individual basis, but will depend primarily on the nature of the exposure and the original approval level of the waiver or exemption. SAF review will be necessary on all requests for modifications involving exemptions granted at that level.

(2) A request will be submitted as a site plan, using the format of attachment 7 for justification.

(3) HQ AFISC/SEWV will coordinate the modification request with appropriate staff agencies.

8-6. Site Plans Requiring Major Command Approval. An information copy of site plans for the following projects will be sent to HQ AFISC/SEWV, Norton AFB CA 92409-7001, upon approval by the MAJCOM:

a. Contractor-owned and operated facilities on private property, when engaged in explosives work under Air Force contract.

b. EOD training ranges located outside clear zones using only explosively operated tool kits (.50 caliber or less).

c. Disposal ranges sited on weapons ranges.

d. Aircraft battle damage repair sites.

e. Combat arms training ranges, when not within required clear zones.

8-7. Aircraft Operations. Taxiing aircraft, and those undergoing end-of-runway checks, loaded with explosives are considered in the transportation mode and are exempt from Q-D and site planning rules. Care must be exercised when establishing locations for these operations, and they should be isolated from other areas to the maximum extent possible.

a. Q-D separation standards do not apply to hot pit refueling pads and arm and dearm pads when the PES is an aircraft undergoing servicing at these locations.

b. Aircraft parking ramps and aprons will be separated according to table 5-1.

c. Integrated combat turnaround sites, and other aircraft operations using live ordnance, will be site planned according to standard safety rules of this regulation.

d. See TO 11A-1-33 for guidance on performing maintenance on explosives loaded aircraft. Maintenance on special weapons loaded aircraft must also comply with nuclear safety standards.

e. Parked, explosives loaded aircraft are considered aboveground magazines.

f. Hot cargo pads are considered as an extension of the munitions storage area for determining separation standards.

8-8. Processing Site Plans. Operating bases and agencies must identify and preplan explosives activities to allow review and processing at all levels. Host and tenant coordination is essential to ensure proper consideration is given to protection of assets and personnel. Site plans will be processed as outlined below.

a. Installations and Contractor Activities. Forward site plans through safety channels to the MAJCOM as instructed by that headquarters or, in the absence of special instructions, as in d below.

b. Tenant Units. Forward site plans through host command safety channels with an information copy to the tenant MAJCOM. The host MAJCOM will obtain agreement of the tenant MAJCOM before processing the site plan where the host targets a tenant. When a US Air Force unit is tenant on a non-US Air Force DOD base, formal site plan approval is requested through the host. As a minimum, the site plan must meet the requirements of this regulation. The tenant will submit a copy of the site plan through command safety channels to HQ AFISC/SEWV, Norton AFB CA 92409-7001.

c. Air National Guard (ANG) and Air Force Reserve (AFRES) Units. Forward site plans through safety channels to the National Guard Bureau (NGB) or HQ AFRES. The NGB or AFRES process the plan as in d below. For ANG and AFRES units tenant on an Air Force installation, process site plan as in b above.

d. Major Commands. Submit correspondence and site plans in duplicate to HQ AFISC/SEWV, Norton AFB CA 92409-7001. The endorsement will state approval of the proposal, along with

any changes, modification, or specific precautionary measures considered necessary.

(1) The MAJCOM will provide an information copy to HQ AFOMS/SGPA, Brooks AFB TX 78235-5000, if planned explosives facilities involve biological and chemical fillers, liquid propellants, toxic gases, sonic hazard areas, any form of electromagnetic radiation affecting health (including radioactive sources and microwave generators) and industrial x-ray. Correspondence should show that command medical personnel have reviewed the plans (AFR 161-2).

(2) Normally, the MAJCOM may expect notification of final action on properly prepared and submitted routine plans within 90 days from HQ AFISC/SEWV. MAJCOMs must provide the following information to request priority action. Prior coordination by telephone is encouraged. MAJCOMs will notify HQ AFISC/SEWV, Norton AFB CA 92409-7001, when site plans are cancelled or no longer required.

(a) Date reply is required.

(b) Proposed contract award date.

(c) Reason priority action is needed.

(d) Reason for not forwarding plans in time for routine processing.

(e) Staff agencies and individuals to be contacted in the event clarification is required for any technical or operational detail.

(3) When approval letters contain conditions under which the DDESB granted approval, the MAJCOM will ensure such conditions are met, and HQ AFISC/SEWV, Norton AFB CA 92409-7001, is notified in writing of planned or corrective actions.

8-9. Site Plan Development. The site plan package will include all information needed to achieve understanding of the siting, construction, and future operations or operational plan to be supported. Detailed, graphic data are essential for prompt, proper, and accurate evaluation. Developers may use alternate methods to outline proposals when prescribed forms are insufficient or inadequate to describe the situation.

a. Include the site plan identification and Programming, Design and Construction (PDC) number (attachment 4) in the requesting letter subject line. All related correspondence should refer to this site plan identification number.

b. Complete AF Form 943, Explosives Waiver/Exemption/Site Plan. according to attachment 4. If not used, the information required must be shown by other means, and reported in the format of attachment 4.

c. To certify there are no plans to locate unrelated facilities within the resulting "clear zones," state that the proposed siting has been reconciled with the base master plan ("basic" and "development" elements).

d. Submit a site location plan at 1 inch equals 400 feet (or metric equivalent) scale. Show the proposed site (highlighted) and its relationship to runways, housing, other explosives storage, and all likely targets. Prepare drawings as shown in paragraph 11-12. Ensure clean and clear copies (original) of maps and drawings are submitted to avoid unnecessary processing delays. A map of the entire base is not required if the proposed siting and all exposures can be shown on a smaller map. If photo copies are being used, ensure sites and exposures are highlighted as done for the originals.

e. Submit only those construction drawings relating directly to safety and protective features. It is not necessary to include drawings of landscapes, roads, etc., unless requested.

f. Show topographic contours or features that would affect separation distances (for example: natural barricades, hills, etc.) on the site plan.

g. Submit scale drawings or plans, 1 inch equals 50 feet, or equivalent, if they will clarify relationships or distances between facilities or provide data pertinent to the approval of the facility.

h. Identify standard facilities by Air Force definitive drawing numbers. Detailed drawings of such facilities are not required. Fully explain any proposed deviation from standard specifications. Construction drawings must be provided when protective features such as blast doors and walls are being changed or modified.

i. For new or nonstandard facilities, forward basic "concept" drawings or sketches. As an attachment to any initial "concept" plan, give a description of planned substantial dividing walls, vent walls, fire walls, roofs, operational shields, barricades, exits, types of floor finish, and type of material to be used in construction. Identify by room number or other means, exactly where explosives, by class/division and NEW, are located. Tentative or provisional approval may be granted based on these drawings. For final approval HQ AFISC/SEWV will advise MAJCOMs of additional submission requirements for drawings. This will be done during

initial processing review. As a general rule, final approval may be given to concept plans when required safety features are included in design drawings, and verified by HQ AFISC/SEWV and the DDESB.

j. If the same complex or facility is planned for use at several installations, initially process the details of the proposed complex or facility as a "typical" layout. Later base sitings need only cover the details needed to show the placement of this "typical" facility in the local environment. MAJCOMs may assign "typical" drawings numbers if desired. This will aid in future siting.

k. Include AF Form 941, Site Plan Checklist, as an attachment to all site plan requests. Ensure that the status of each item is shown in the appropriate column. For example, if hardened POL shelters are being sited, the appropriate K-factor must be added to item 3f and the appropriate column checked. Comments may be expanded in the body of the submission letter by referencing the appropriate paragraph of the letter in item 3f of the form. See attachment 5 for an example of a completed AF Form 941.

8-10. Clear Zones. Once an explosives location is sited, every effort must be made to keep a clear zone equal to the original designed capacity. Reduction of a clear zone due to a temporary stock level reduction or other reasons may result in land disposal or encroachment by unrelated facilities. Later stock increases resulting from changed or expanded mission requirements could result in priority construction, abandonment of unrelated facilities, or unnecessary risks resulting in numerous waivers.

a. Preparation of site plans and construction of facilities affected by explosives criteria are civil engineering responsibilities. Personnel responsible for explosives operations and safety will assist the base civil engineer in:

(1) Determining the explosives Q-D clear zone required for each facility or location. Use design capability as the basis for these determinations. Clear zones will reflect actual sited or waived NEW, whichever is greater. Markings on the base master plan need not be changed when clear zones are expanded by short-term (1 year), nonrecurring waiver situations.

(2) Justifying retention of each established clear zone during surveys by the General Services Administration or the Office of the Secretary of Defense.

b. Base civil engineering personnel will submit changes and revisions to base comprehensive planning documents (Tabs C-1 and D-8) according to 86-series publications and applicable portions of this regulation. These documents will be submitted to base weapons safety personnel for review and coordination before submission to higher headquarters. Information copies will be sent through command safety channels for review according to command directives.

c. Tabs C-1 and D-8 will reflect all explosives clear zones.

d. Overseas bases may establish separate clear zones based on minimum peacetime, exercise, and wartime storage requirements. Any construction between these zones will require site-planning; however, as described in paragraph 1-9, it may be possible to site without exemptions, if proper procedures can be implemented so that during exercises or wartime exposed personnel and equipment are removed from the clear zone.

8-11. Reduction or Redesignation of Clear Zones. Any permanent reduction in the design capacity or the change in use of facilities in Category Group 42 (except ancillary facilities), or listed in section H or J for Category Group 21, AFM 86-2, requires prior approval by HQ USAF/LEYW. HQ AFISC/SEWV reviews and provides a safety analysis of the request to HQ USAF/LEYW. Reductions for all other facilities will be approved by MAJCOM weapons safety and logistics personnel. Requests will be submitted as outlined below.

a. Permanent Reductions or Redesignations:

(1) Where a contemplated change in use of a facility will make it a different type facility (AFR 87-2) and the change will result in a permanent clear zone reduction or redesignation, submit the request, through command safety and engineering and HQ AFISC/SEWV, to HQ USAF/LEYW, using AF Form 123, Request for Changed Use of Real Property. Include a map showing both the old and proposed clear zone. Provide a copy of the request to all agencies included in the original siting request.

(2) When a permanent reduction or redesignation of clear zones results from other than a change in facility type, submit requests by letter, through command safety and engineering channels and HQ AFISC/SEWV, to HQ USAF/LEYW. Include a clear zone map showing both the old and proposed clear zones. Pro-

vide a copy of the request to all agencies involved in the original siting request.

b. Temporary Reduction or Redesignation of Clear Zones. To meet mission requirements, a temporary reduction of the established clear zone may be approved by the MAJCOM. Submit requests for temporary reduction or redesignation of clear zones using the applicable procedures in a(1) or (2) above through command engineering and safety channels for review and approval.

(1) Temporary reductions or redesignations are effective for the period required to meet the anticipated need but will not exceed 2 years. Requests for renewal need not be on AF Form 123 unless there have been significant changes which make information on the original request obsolete.

(2) Every effort must be made to avoid building permanent structures in the area resulting from a temporary reduction in clear zones. If permanent structures are built in this area, they will be built with the understanding that they may require change in use or abandonment due to changed or expanded storage requirements. Such facilities should be designed for adaptability to munitions maintenance and storage. They should be sited at no less than intraline distance based on sited capacity criteria or inhabited building distance applicable to the reduced and redesignated storage capacity, whichever is greater.

(3) When temporary structures are constructed or located outside the temporary clear zone but within the sited capacity clear zone, these structures will be removed immediately when mission requirements dictate return to the established sited capacity clear zone.

(4) Structures located outside the temporary clear zone, but within the sited capacity clear zone, must be sited waiver-free.

Section B—Construction Considerations

8-12. General Information. The primary objective of this section is to ensure design procedures and construction techniques used in siting and constructing explosives facilities will provide the desired margin of protection for personnel and valuable materiel. The secondary objective is to ensure that explosives and nonexplosives related facilities are constructed in a way that will maximize cost effectiveness in facilities planning and utilization.

a. AFM 88-22, Structures to Resist the Effects of Accidental Explosions, and AFM 88-2, Air Force Design Manual, Definitive Designs of Air Force Structures, should be used in selecting and designing explosives facilities.

b. By using the standards and guidelines provided in these directives, units can ensure that both of the above objectives are met. Managers must carefully evaluate their need for explosives facilities and ensure that construction techniques match mission requirements. The following are examples of items that should be considered.

(1) Blast doors and substantial dividing walls should be provided only where high explosives are involved and protection of personnel or prevention of propagation or simultaneous detonation is desired.

(2) Any facility that provides weather protection and meets security and safety standards is acceptable for nonmass-detonating explosives storage and operations.

(3) Definitive drawings may be altered provided the designed protection levels are not compromised. For example, the rocket storage checkout and assembly building, drawing AD 33-39-03, may be constructed without frangible roofs and other definitive safety features if they are not needed for the planned contents of the facility.

8-13. Buildings:

a. Earth-covered, igloo-type structures are preferred for explosives. Air Force construction should follow standard definitive drawings, unless operational requirements dictate the use of special structures.

b. Exterior walls and roof coverings should be constructed of noncombustible materials.

c. Roofs and walls, except for specifically designed containment and protection purposes, should be as light in weight (weak) as practicable. They should be constructed and supported to allow venting of an internal explosion with the minimum number of large fragments. Exceptions are made where design requirements such as the following must be met: fire walls, substantial dividing walls, special roof loadings, external overpressure protection, and specialized manufacturing facilities.

d. Each magazine will be provided with appropriate means of air circulation or dehumidification.

8-14. Interior Finishes and Floors:

a. Noncombustible material will be used for interior surfaces of buildings (AFM 88-15).

(1) Where hazardous locations (paragraph 6-2a) exist, interior surfaces should also be smooth, free from cracks and crevices, and have joints taped or sealed.

(2) If painted, the surfaces should be covered with a hard gloss paint that is easily cleaned. Horizontal ledges which might hold dust will be avoided or beveled. Cove bases at the junction of the walls and floor are recommended.

(3) If it is necessary to use combustion-supporting materials in the interior of an operating building, treat or cover all exposed surfaces with fire-retardant material.

b. Conductive nonsparking floors are required where certain exposed explosives and materials, sensitive (easily detonated or ignited) to the uncontrolled discharge of static electricity, are present.

(1) Such floors will be constructed of nonsparking material such as lead, conductive rubber, or conductive flooring. This flooring must be smooth, free from cracks, and of a type that will not develop surface separations, wrinkle, or buckle under operational conditions.

(2) The electrical resistance measured between the ground and a 5-pound electrode in direct contact with 5 square inches of floor area will not exceed 250,000 ohms.

c. Where washing is required, floors must be able to withstand repeated applications of hot water or other compatible cleaners.

8-15. Fire Walls. Fire walls are designed to limit the spread of fire. They should extend through the roof and walls of the buildings. They must be constructed as prescribed in AFM 88-15. If openings are required, they must be protected as described in the National Fire Code, Standard 80, Standards for Fire Doors and Windows.

a. As a minimum, 2-hour fire walls will be installed between explosives operating bays, cubicles, etc., and other areas not involved in munitions activities.

b. Two-hour fire walls may be used to provide required separation for compatibility groupings of class/division 1.3 and 1.4 munitions.

c. Walls in munitions buildings should be constructed of approved nonporous materials and sealed with coating materials to prevent absorption of explosive and chemical agents.

8-16. Reinforced Concrete Walls. These walls may vary in thickness, but will be at least 12 inches thick and constructed as specified in AFM 88-22 unless engineering studies determine that less protection is acceptable for present and known future requirements. Concrete should have a design compressive strength of 2,500 psi or greater.

a. The capability of a 12-inch reinforced concrete wall to prevent simultaneous detonation is based on a limit of 425 pounds NEW of class/division 1.1 explosives, with explosives kept 3 feet or more from the wall. Where these weight and spacing restrictions cannot be met, civil engineering personnel must evaluate the specific conditions according to AFM 88-22 criteria to determine the proper wall construction or weight and spacing limitations.

b. For special weapons, the criteria in TO 11N-20-7, when more restrictive, will be the limiting factor and override the above criteria.

c. The provisions of paragraph 8-14a apply.

d. If the 425 pound NEW limit is not exceeded, these walls may be used to provide the required separations for compatibility groupings of all types classes of explosives. These walls do not protect personnel near the wall from high explosives because the spalling of wall surfaces, opposite the explosion source may form dangerous secondary fragments. Refer to AFM 88-22 for personnel protection standards.

(1) A 12-inch reinforced concrete wall provides adequate protection for disassembly operations involving an item containing 15 pounds or less of high explosives when the nearest part of the item is at least 3 feet from the wall and 2 feet from the floor.

(2) A 30-inch reinforced concrete wall provides adequate protection against the effects of an item containing not more than 50 pounds of high explosives. The same separation distance as stated in (1) above applies.

(3) A 36-inch reinforced concrete wall provides adequate protection against the effects of an item containing not more than 70 pounds of high explosives. The same separation distance as stated in (1) above applies.

8-17. Substantial Dividing Walls:

a. These walls are one way of separating explosives into smaller groups to minimize the results of an explosion and allow a reduction in Q-D separation. They may also be used to separate stocks of munitions to ensure compliance with compatibility requirements involving all Haz-

ard Class/Divisions. (Shielding is generally required only from certain hazardous phases of manufacturing or renovation. See chapter 10.)

b. Reinforced concrete walls must meet the criteria in paragraph 8-16.

c. Retaining walls filled with earth or sand must be at least 5 feet wide, with earth or sand packed between concrete, masonry, sheet steel, or wooden retaining walls.

d. Sandbag-type dividing walls will be at least 5 feet thick, except where approved for other uses as in TO 11N-20-7.

e. Retaining walls and sandbags offer little personnel protection, but may be used as barricades to reduce intermagazine separations from K11 to K6 (paragraph 5-13).

8-18. Blast Doors. Blast doors which separate explosives working spaces or storage spaces in existing buildings will meet design definitive drawing specifications. Such doors should be at least equal in strength of adjacent walls. (See AFM 88-22 for design factors for new structures.) Care must be exercised to ensure these doors are not installed as a matter of convenience. Blast doors should be avoided when a continuous reinforced wall would not interfere unnecessarily with operations.

8-19. Building Exits. One properly located exit is suitable for small operating rooms or cubicles that have substantially constructed walls on three sides if personnel are limited to the minimum required to do the particular task.

a. In other circumstances, at least two exits remote from each other (regardless of dimensions), will be provided for each operating room or building containing explosives.

b. If more than eight persons are employed in the room, it should have additional exits on the basis of one exit for each additional group of five persons (or fraction thereof).

c. Exits should be at least 32 inches wide. However, in determining the total number of exits required, each 32 inches of width may be considered an additional exit. Exits should be spaced equally about the perimeter of the building.

d. Exits should be no more than 25 feet, but never more than 75 feet, away from employees. Exits should lead directly outside. Each exit will be planned to avoid obstructing the escape of personnel. Explosives should not be placed between personnel and exits.

8-20. Exit Doors. Exit doors in operating buildings will open outward. During operating hours, these doors may be fastened with deadbolt panic hardware that cannot be operated from the outside. The opening of the exit door should never be less than 32 inches by 80 inches high. Exit doors will not be obstructed.

a. Except for storage magazines, exit doors should be panel or flushtype doors in pairs.

b. Vision panels in each door are desirable. The using agency may omit them for security. Vision panels should be in the upper half of the door, not exceed 100 square inches, and glazed with acrylic plastic or equivalent material. They should be of shatter resistant, noncombustible material or slow-burning material of a type which is practically smokeless.

c. All interior doors should open in the direction of flow of material.

8-21. Safety Chutes. Safety chutes will be provided as exits from multistory hazardous locations where rapid egress is vital and cannot be otherwise obtained.

a. Supporting members for safety chutes should be made of noncombustible materials.

b. These chutes must be provided for work levels above the ground floor. They should be placed on opposite sides of the operation (so that people will not be trapped by a fire between them and a single chute).

c. Exits to safety chutes will open on a platform at least 3 feet square, equipped with guardrails. The chutes will begin at the outside edge of the platform.

d. Landings from safety chutes should be located where escape routes will be free from tripping hazards, low guy lines, drains, ditches, or other obstructions.

e. A manual or automatic tripping device should be installed at or near the entrance to chutes to give an alarm in the operating building and nearby structures. This tripping device may also actuate deluge valves and water curtains in the building or room affected.

f. Recommended safety chute dimensions and construction are: angle, 40-50 degrees with the horizontal; depth of chute, 24 inches; radius at bottom of chute, 12 inches. The lower end of the chute will not be over 24 inches above the ground. It will have enough of a horizontal run to prevent an injury to the employee because of speed of exit.

(1) In general, chutes less than 15 feet long require no horizontal run. Those 40 feet long require 6 feet of horizontal run.

(2) The juncture of sections will be well-rounded and must overlap in the direction of travel.

8-22. Emergency Exits and Fire Escapes. Use the American National Standards Institute (ANSI) Safety Code A156.3, Building Exits, and NFC, Standard 101, Life Safety Code, as a guide in constructing emergency exits and fire escapes.

a. The rules for emergency exits, including safety chutes for explosives operating buildings, are the same as those in paragraphs 8-19 and 8-21.

b. Exterior fire escapes from a two or more story building must be of noncombustible material. They should be separated from the interior of the building by fire-resistant walls. Fire escape stairs will be arranged so they are exposed to the smallest number of window and door openings. All openings will be protected as required by the NFC, Standard 101.

8-23. Stairways. Stairways will conform with AFOSH requirements. Open-sided stairways in an explosives building (or in one where a dangerous fire hazard exists) must have handrails at least 42 inches high. It must have midrailings to preclude falls when vision might be impaired by injury or when panic might result. Open risers should be avoided.

8-24. Fixed Ladders. Fixed ladders should conform to the ANSI Safety Code A14.3, Construction, Care, and Use of Ladders, and AFOSH Standard 127-6.

8-25. Platforms, Runways, and Railings. Platforms, runways, and railings should conform with AFOSH requirements.

a. Platforms and runways less than 30 feet long require one stairway or fixed ladder. Those over 30 feet long or more than 250 square feet in area require two stairways or ladders.

b. Platforms, floor openings, runways, tanks, or open vats with tops which are less than 3 feet above the floor of the building or platform must be provided with a standard 42-inch guardrail with midrails and toeboards.

c. Permanent railings should be of metal except in those process buildings where metal railings would increase the hazard.

8-26. Passageways. If weather-protected passageways (ramps) are needed between buildings or magazines, they should have suitable fire stops between the buildings.

8-27. Roads, Walks, and Gates:

a. Good all-weather roads should be provided to, and within, the explosives area.

b. There is no mandatory safety requirement for more than one gate in the fence around an explosives area. The MAJCOM usually determines how many gates are needed after considering all elements of the situation. Consideration should be given to providing an alternate personnel gate for emergency evacuation.

c. Road systems serving groups of magazines or explosives buildings will be arranged without dead ends so that motor vehicles carrying explosives cannot be isolated. To prevent dead ending, interconnecting roads for magazine service roads need only be passable trails adequate to accommodate the typical vehicles used at the installation.

d. Roads serving a single magazine or explosives processing building (including its service facilities) may dead end at the magazine or building. The road system should be designed to eliminate the need for passing through an intermediate explosives area in traveling from one area to another.

e. Walkways and roads at the entrances to or between adjacent operating buildings containing explosives will be hard surfaced or boardwalks. These walkways and roads should be kept free from foreign material. Foot brushes, door mats, or scrapers should be provided at the entrance of each building, except magazines. Special attention will be given to passageways, walkways, and stairs which have been subjected to the effects of inclement weather.

8-28. Windows and Skylights. Inhabited building distances do not protect against the hazards of flying glass. Buildings of the administration area, shops, and similar areas, separated by inhabited building distance, must not have windows and other large glass areas that face buildings where explosives are manufactured, processed, handled, or stored.

a. Transparent, shatter resistant, slow-burning plastic which is practically smokeless may be used as glazing if an explosion could cause injury from falling or projected glass. For windows glazed with conventional glass, the hazard from falling and projected glass may be

reduced by covering the inside with wire mesh screening. Where plastic or mesh-reinforced windows are used, the base fire department should note this type construction on prefire plans to facilitate firefighting personnel entry in emergency situations.

b. Windows in buildings having class/division 1.3 explosives should be large enough to provide for release of pressure in the event of an explosion. The frame or sash should be of a suitable venting type. Shatter resistant-type glazing is recommended.

c. Skylights will not be used in buildings where explosives or ammunition are processed and should not be used in any buildings in an explosives establishment.

8-29. Drains and Sumps. When lines are required for draining liquid explosives or liquids containing explosive waste, they will be free of pockets and low spots. The drain line will be sloped at least one quarter inch per foot so that explosives will not settle in the drain line. The drain system will include a sump or basin so explosives can be removed.

a. Sumps will be designed so that suspended and solid explosive material that may settle cannot be carried in the wash waters beyond the sumps. They will be constructed so that the overflow will not disturb any floating solids. The design will allow enough settling time, based on the settling rate of the material and the usual rate of flow. It will allow the collected explosives to be removed easily and allow those which float on water to be retained until they can be skimmed off.

b. Bolted sump tanks or other types of construction that allow the explosives to settle in obscure or hidden spaces are prohibited. Avoid any deposition of explosives from sump effluent due to drying, temperature changes, or interaction with other industrial contaminations. Use sweeping and other dry-collecting measures to keep explosives which are appreciably soluble in water out of the drainage system.

c. In all new construction, drains between the source of explosives and the sump will be troughs with rounded bottoms. The drains will have removable, nonsparking, ventilated covers for ease of inspection for accumulated explosives. Waste liquids will not be run into closed drains and sewers.

d. Drains will be inspected periodically and steps taken to prevent the buildup of explosive deposits. Drains and sewers containing explosive waste will not be connected to the normal sewage systems.

8-30. Choosing and Installing Hardware:

a. To reduce the risk of accidental ignition by spark, consider the operational conditions in any hazardous location in the choice and installation of hardware. Certain hazards may be great enough to warrant the use of materials that will reduce the possibility of sparking. Therefore, special precautions must be taken for hardware having metal components which is used around exposed explosives.

b. Secure hardware firmly in place by using locking devices if it might become loose and enter into an explosive mix. This precaution is especially important in manufacturing and renovation operations.

c. Avoid installing hardware (including pipes and ducts) on light blowout-type walls and roofs. If it is necessary, select materials or items that will not yield heavy fragments in an explosion.

8-31. Tunnels. Tunnels must be drained, ventilated, well lighted, and have at least two exits. Water and steam service lines in tunnels will be lagged with suitable insulation. Tunnels between buildings that contain explosives will be built to resist the shock wave and blast of an explosion. Only authorized personnel will enter the tunnels.

8-32. Powerhouse Equipment. Powerhouse equipment, boilers, engines, and auxiliary equipment will be installed in compliance with the American Society of Mechanical Engineers (ASME), Boiler Code (includes Code for Unfired Pressure Vessels), the National Electrical Code, and other codes, regulations, or standards accepted as standard good practice.

8-33. Refrigeration. Refrigeration equipment (including air conditioning) must be installed as required by the ANSI Safety Code 89.1, Mechanical Refrigeration.

8-34. Laundries. Laundries should have facilities for washing and flameproofing uniforms if such clothing is in use.

a. The facilities will include a safe place to store uniforms and rags that are contaminated with explosives before washing. Sumps will also be provided to remove explosives from waste water. There should be facilities available to

test whether the contaminant (particularly any insoluble toxic substance) has been removed.

b. Commercial concerns laundering such articles will be informed of the nature of the explosives contamination and possible dangerous chemical reactions. These concerns should also have the facilities listed in a above.

8-35. Steam for Processing and Heating. Steam used to heat operating buildings that contain explosives must never be hotter than 228°F (108.9°C). Process steam may exceed this if necessary but will not exceed 249.5°F (120.8°C). (Process steam is steam that is in direct contact with explosives or which, in case of equipment failure, would exhaust directly into contact with explosives or explosive fumes.)

a. The exterior of steam or hot water pipes in contact with wood, paper, or other combustible materials must never be hotter than 160°F (71°C). If the steam is hotter than this, the steam lines must be covered and painted with an impervious material or otherwise protected against contact with explosives.

b. Where a reducing valve is used, a relief valve should be installed on the low pressure piping. The production of superheated steam caused by the throttling action of reducing valves will be prevented by positive means, preferably by using a "water leg" or water column to control steam pressure of 5 psi or less.

c. Where close control of steam temperature is needed, indicating and recording pressure or temperature gauges should be installed. Such devices should be periodically tested and the test results recorded.

d. Where circulating hot water is used for heating, the installation and operating conditions will be according to AFM 88-8.

e. Where resistance to ground is high, steam or hot water lines should be grounded where they enter buildings.

8-36. Ventilation. Buildings where dust, fumes, or vapor are formed will be adequately ventilated, preferably at the source of the hazard. Air should not be recirculated through these ventilation systems.

a. Exhaust fans through which combustible dust or flammable vapor pass will be equipped with nonferrous blades (or casting lined with nonferrous material) and approved motors. The entire ventilating system will be bonded electrically and grounded properly. The NFC, Standard 91, Blower and Exhaust Systems, may be used in the installation of such systems.

b. For buildings in which there is explosive dust, an air balance that gives a slight negative pressure within the building is required.

c. If air conditioning equipment is installed, it should be done as directed in the NFC, Standard 90A, Air Conditioning and Ventilating Systems, and Standard 90B, Warm Air Heating and Air Conditioning. Exhaust systems will be cleaned thoroughly, serviced on a regular schedule, and a log kept.

8-37. Electrical Equipment. The installation of electrical equipment within an explosives area (building, magazine, shelter, and so forth) will comply with the National Electrical Code as a minimum, unless specified otherwise (chapter 6 and AFM 88-15).

8-38. Outdoor Storage Sites. Outdoor storage sites will be level, well drained, and free from unnecessary combustible materials. The dunnage, supporting timbers, or platform on which explosives are stored will be built and placed to prevent falling, sagging, or shifting of the explosives (TO 11A-1-61).

a. To ensure stack stability and free circulation of air, adequate dunnage is needed, especially between the stack and an unimproved surface.

b. Nonflammable or fire-resistant, waterproofed, overhead covers will be provided for packaged explosive items unless the item is contained in packing designed and approved for unprotected outside storage.

c. There must be at least 18 inches between the top of the stack and the cover. If airspace is kept between the cover and the stacks, the sides of covered stacks may be protected by nonflammable or fire-resistant, waterproof covers.

8-39. Collection of Explosives Dusts. The high explosive dusts, which may be removed by a vacuum system, are TNT, tetryl, Explosive D, Composition B, and pentolite.

a. Vacuum Collection. A "wet collector" which moistens the dust close to the point of origin and keeps it wet until the dust is removed for disposal is preferred. Explosive D should be collected in a dry system. More sensitive explosives (such as black powder, lead azide, mercury fulminate, tracer, igniter, incendiary compositions, and pyrotechnic materials) may be collected by vacuum in this manner. Howev-

er, it must be kept wet, with compatible wetting agent close to the point of intake.

(1) Vacuum (aspirator) systems must be arranged so each type of explosive is collected separately or so dissimilar hazards (for example, black powder with lead azide) are not mixed. Provision should be made for the proper liberation of gases that may be formed.

(2) Vacuum systems used to collect these more sensitive materials should be used only for operations with fuses, detonators, small arms ammunition, and black powder igniters.

b. Location of Dry-Type Collection Chambers. Dry-type explosive dust collection chambers, except as specifically provided for portable units, should be located outside operating buildings, in the open, or in buildings exclusively for the purpose.

(1) There must be a protective barrier between the operating building and the outside location or separate building where the collection chamber is placed.

(a) If the chamber contains 25 pounds of explosives or less, this barrier may be a substantial dividing wall located at least 8 feet from the operating building.

(b) If the chamber contains more than 25 pounds and is separated from the operating building by a 12-inch reinforced concrete wall, the wall must be separated from the operating building by a minimum of intraline distance.

(c) If the barrier meets the requirements for operational shields or barricades (for the quantity of explosives in the collection chamber), it will be at a minimum of K9 distance from the operating building.

(2) When it is not practicable to locate dry-type collection chambers outside the operating building, a separate room within the building may be set aside for the purpose. This room must not contain other operations and never be used as a communicating corridor or passageway between other operating locations within the building when explosives are being collected. If more than one collection chamber is to be placed in the room, the room will be subdivided into cubicles. Not more than one collection chamber will be in a single cubicle.

(3) Dry-type portable vacuum collectors will not be placed in a bay or cubicle where explosives are present. If they do not contain more than 5 pounds of explosives, they may be placed outside the building or in a separate cubicle having substantial dividing walls. If they contain more than 5 pounds, the requirement for stationary collectors will be met.

c. Location of Wet-Type Collection Chambers. If stationary and portable wet-type collectors do not contain more than 5 pounds of explosives, they may be placed in operating bays or cubicles. If placed in separate cubicles, the limits for each one may be 15 pounds. If they contain more than 15 pounds, the location requirements for dry collectors will apply.

d. Design and Operation of Collection Systems. Collection systems and chambers will be designed so that metal parts do not pinch explosives or explosive dusts. Pipes or tubes through which the dust travels should have flanged, welded, or rubber connections. Threaded connections are not allowed. The system will be designed to reduce accumulation of explosive dust in parts other than the collection chamber.

(1) Long radius turns (centerline radius at least four times the diameter of the duct) will be used in the duct work. The number of points of application of vacuum should be kept to a minimum. Each room requiring vacuum collection should have a separate exhaust line to the primary collection chamber. Not more than two bays will be serviced by a common leader to the primary collection chamber. Wet primary collectors are preferred.

(2) The vacuum line should be as short as possible from points of application of vacuum to the wet collectors. The number of wet primary collectors serviced by a single secondary collector should be kept at a minimum. Not more than two dry primary collectors should be connected to a single secondary collector (wet or dry-type). If an operation does not create an airborne concentration of dust, a manually operated suction hose to remove explosive dust is preferred. A permanent attachment increases the risk of propagation through the collection system should a detonation occur at the dust-producing machine.

(3) Manually operated hoses should not be connected to explosive dust-producing machines. In dry vacuum collection systems, two collection chambers should be installed in series, ahead of the pump or exhauster. Wet collectors must provide for immersion of explosives to break up air bubbles, to release airborne particles, and to remove airborne moisture before it leaves the collector. This will keep moistened particles of explosives from entering the small piping between the collector and the exhauster or pump.

(4) Explosives dust will be removed from the collection chamber at least once each shift to eliminate unnecessary and hazardous concentrations of explosives. The entire system should be cleaned weekly, dismantling the parts if necessary.

(5) The entire explosive dust-collection system will be electrically grounded and the grounds tested semiannually.

8-40. Water Flow for Explosives Manufacturing Areas and Loading Plants. An outside, underground, looped system of mains, preferably cast iron, should be installed. The water distribution system will meet the requirements of AFM 88-10 and the NFC, Standards 1226 and 1231. Mains will be valved properly and will not extend under explosives locations.

8-41. Automatic Sprinkler Systems. Certain buildings in explosives manufacturing, surveillance, and inspection or ammunition workshop areas (for example, the receiving building in a load line) may require automatic sprinkler systems. The proper system should be determined by engineering studies of the hazards involved. Each system must be equipped with an audible warning device to alert personnel. Sprinkler systems in each building must be connected into the central alarm location. Sprinkler systems will be installed as prescribed in AFM 88-15 and the NFC, Standard 13.

8-42. Deluge Systems. Machinery or operations in which there is a process fire hazard will have an auto deluge system. Quick acting sensors such as ultraviolet detectors will be used. In addition, hand-operated, quick-acting deluge control equipment should be provided.

a. Deluge systems should be charged with steam, water, or chemicals. This depends on the character of the fire to be controlled, as determined by engineering studies of the hazards (NFC, Standard 13, Sprinkler Systems, and Standard 16, Foam-Water Sprinkler and Spray Systems).

(1) Control devices used should be actuated by rate or rise, fixed temperature, or their combination, as appropriate. If the system contains electrical components, the controls will be placed in enclosures approved by the National Electrical Code (NFC 70).

(2) If there are two or more deluge systems in the same fire area, supply mains and the arrangements and size of the system riser will provide each system with the required quantities of water per head.

(3) A device will be installed on the supply side of the system so that it will actuate an audible warning device in affected operating areas when the pressure fails.

b. Operations protected by a deluge system should be stopped immediately if the system fails and should not be resumed until adequate protection is provided.

8-43. Maintenance and Repairs to Equipment and Buildings:

a. Conduct an appropriate safety analysis on all new process machinery before it is purchased for use in a hazardous environment. Examine and test newly repaired machinery to ensure its safe operating condition.

b. Before repairs are allowed on any equipment that has been exposed to contamination by explosive dust, etc., clean the equipment and tag it. The tag must be signed by the operating supervisor, certifying that all explosives have been removed. If it has been impossible to clean some part, note this on the tag, together with clear instructions to maintenance personnel on how to handle it safely.

c. Do not undertake major repairs or changes in a hazardous location during regular operations without removing the hazardous material. The consent of the supervisor in immediate charge of the building must also be obtained.

d. Before beginning repairs in an explosives location, inspect the area for the presence of explosives and dust. Remove all such material from equipment, crevices beneath floors, within walls and pipes, and under fittings where explosives may be ignited. The area should be wet or be washed down thoroughly.

e. If machines and equipment have been oiled, repaired, or adjusted, remove all tools used for the repairs. All operators must inspect their equipment to be assured of its safe operating condition before resuming work.

f. When maintenance personnel enter buildings in which conductive shoes are required, wear conductive shoes or conductive overshoes with ankle straps. Because electricians are not allowed to work on live electrical equipment while wearing conductive shoes, remove all explosives before electrical work is done.

Section C—Disposal Ranges

8-44. General Information:

a. The planned detonation of explosives requires more stringent safety distances requirements than those listed in chapter 5. The destruction site on a disposal range will be selected based on the types of munitions involved and the criteria outlined below.

(1) K328 (1250 feet minimum) for nonfragmenting explosive materials. If known, maximum debris and fragment throw ranges, with an appropriate safety factor, may be used to replace the 1250 foot minimum distance.

(2) K328 (2500 feet minimum) for fragmenting explosives.

(a) Four thousand feet minimum for bombs and projectiles with a caliber exceeding 5 inches.

(b) The maximum fragment and debris throw range , with an appropriate safety factor, may be used to replace the minimum distances when this data is available.

(3) Items should be positioned so that lugs and strongbacks and nose and tail plates are oriented away from exposures.

(4) When considering debris and fragmenting hazards, the interaction of the individual munition in a stack, and between separate stacks must be considered.

b. Even at the above distances, personnel in the open may be exposed to some fragments and debris. Therefore, the following actions should be taken to reduce hazards when explosives weights cannot be lowered or when greater distances are not available:

(1) Confine the explosion results at the source through the use of pits.

(2) Use barricades adjacent to the exposure or the source, or both, and similar aids to limit the range of fragments or blast effects. Show these on the site plan. Disposal range site plans submitted before the publication of this regulation do not have to be resubmitted to meet this requirement.

(3) Evacuate all personnel who are nonessential to the disposal operation and ensure overhead cover is provided as specified inc below.

c. Persons engaged in the disposal work must be given time to reach a safe distance before igniting a train of combustible material or detonating a charge. When destroying fragment-producing munitions in class/divisions 1.1 and 1.2, provide frontal and overhead protection for range personnel located less than distances required by a above from the detonation. If a personnel shelter is required, locate it at least 300 feet from the disposal site. It must offer substantial fragment-proof overhead cover and frontal protection.

d. The proximity of facilities and other factors (such as the terrain, composition of the soil, or weather) may limit the quantity of explosives authorized for destruction on the range to a smaller quantity than in those permitted using the K factors in a above. To find the explosives limits to be shown in the site plan, start with a limited quantity. Gradually increase it until the optimum amount consistent with a safe and efficient operation is established.

e. For quarry operations, a minimum protection factor of K350 is required (TO 11A-1-66).

8-45. Siting Requirements:

a. Each disposal site must be located in relation to the prevailing winds so that sparks, flames, smoke, and toxic fumes from the site will not blow toward other facilities.

b. Natural barricades (hills, woods, etc.) should be used between the disposal site and any operating building or magazine, if possible.

c. All disposal sites, such as burning pits, burn furnaces, detonation points, etc., for unserviceable munitions are considered hazardous waste treatment facilities. In the United States, they will be included on the installation hazardous waste permit according to 40 CFR 260-265. Overseas facilities must comply with host nation regulations as determined by the status of forces agreement.

d. Siting disposal ranges must not conflict with the use of any existing or proposed controlled airspace. Any proposed siting of a munitions disposal range requires submission of a written aeronautical proposal to set up a Controlled Firing Area (CFA) according to AFR 55-2. Activation and use of the CFA will be according to instructions and requirements in Federal Aviation Handbook 7400.2B, chapter 17, Procedures for Handling Airspace Matters, and this regulation. This does not apply to EOD training ranges, or a range used only to burn nonfragmenting munitions. Units should consider siting disposal ranges on existing bombing and target ranges as AFR 55-2 requirements should have been complied with.

e. If an explosives disposal range is needed to destroy unserviceable munitions within a weapons range, it must be sited as in paragraph 8-44

and comply with TO 11A-1-42. The site plan proposal must also state that the requirements of AFR 55-2 have been complied with.

(1) If a disposal range is already in use on a weapons range, after-the-fact siting will be done. The site plan proposal will include a statement of previous use.

(2) Normal weapons range clearance during which dud ordnance is disposed of in place does not require siting according to this regulation.

f. A furnace used for the disposal of munitions, as authorized by TO 11A-1-42, is usually located on disposal ranges. It must be protected from demolition effects. For siting purposes, burning kettles will be located at least 300 feet from inhabited buildings, public transport routes, and the base boundary. Separation from other explosives facilities will be 300 feet or appropriate intraline distance (table 5-1), whichever is greater.

8–46. Explosive Ordnance Disposal (EOD) Training Ranges. Because the quantity of explosives required to maintain EOD proficiency is small, criteria for an EOD training range are not as stringent as required for actual disposal operations. EOD training ranges are limited to a maximum of 5 pounds of demolition explosives (bare charges or charges without a fragment hazard, such as MK-series shaped charges). These ranges must be constructed and sited as follows:

a. The destruction point must be at least 500 feet from all other facilities (including public highways, base boundaries, runways, taxiways, and parking aprons).

b. A barricade should be constructed within 10 feet of the destruction point to control ejection of debris. It must be the equivalent of two sandbags thick and at least 6 feet high.

c. The barricade must have two entrances (opposing each other at 180 degrees). Each entrance must have a barricade equivalent to two sandbags thick and be long enough to effectively block all fragments and blast.

d. If the destruction point cannot be at least 500 feet from the facilities described in a above, it may be located at 300 feet if the range is limited to 2.5 pounds of demolition explosives, or 200 feet if the range is limited to 1.25 pounds of demolition explosives. Destruction points located at these reduced distances must be barricaded as described in b and c above.

e. If the training range is used for operations that will produce fragments above the level expected for normal EOD proficiency training (normally open shots), the range must meet the requirements of paragraph 8-44 and TO 11A-1-42, section I.

f. The range distance may be reduced to 100 feet if the EOD training is done using explosively operated tool kits. In this case, the site must be barricaded as described above, and only inert bombs and fuzes used for training.

g. EOD training ranges may not be located in an "explosives prohibited" area (paragraph 5-24e).

h. EOD training ranges may be used for burning operations for cased ammunition if the following conditions are met:

(1) Guidance provided in TO 11A-1-42 and this chapter must be observed to ensure personnel safety and fire prevention.

(2) Pit, trench, and furnace operations must be suitably barricaded and covered to prevent fragment scatter.

(3) Limit quantities to ensure that the blast effects of 5 pounds (TNT equivalency) for a 500-foot facility, or 2.5 pounds for a 300-foot facility are not exceeded.

(4) The safety distances will not be further reduced due to the use of EOD protective devices.

(5) Clearance must be obtained from the bioenvironmental health officer, airfield operations, safety, and fire chief prior to any burning activity.

i. EOD training ranges may be used for other authorized proficiency training by authorized agencies, subject to MAJCOM controls, provided:

(1) Such use complies with the explosives limits and conditions of this chapter.

(2) EOD retains custody of ranges and overall schedule approval.

8–47. Explosives Contaminated Areas. It is against Air Force policy to bury explosives or chemical agents. Sites formerly used for this purpose may exist on unused weapon or demolition ranges. Therefore, the following controls will be taken to prevent personnel from entering any known or suspected contaminated area:

a. Impact areas on former weapons ranges will be placarded with warning signs and, where feasible, fenced in the manner as required for active ranges (AFR 50-46).

b. Disposal sites on demolition ranges and known or suspected burial sites for explosives or chemical agents will be placarded with warning signs as required for active demolition ranges. These signs will be multilingual where needed (TO 11A-1-42).

c. The locations of all known or suspected contaminated areas will be permanently annotated on Tab C-1, Base Layout; Tab M, Facilities Development Plan; and other appropriate tabs of the base comprehensive plan (AFR 86-4). Include in the base real property records the exact location (that is, legal description) of both closed and active disposal sites and demolition ranges. Forward the description to the applicable Corps of Engineers (COE) office for annotation on the base's real property records (AFR 87-4).

8–48. Aircraft Battle Damage Repair Sites. These are sites where battle damage is simulated on aircraft hulks by detonating up to 2 ounces of explosives packed inside a length of steel pipe. Where sandbags are used to cover these charges and prevent fragment escape, a 300-foot clear zone is required. For unsandbagged charges, a 500-foot clear zone is necessary.

Chapter 9

CHEMICAL AMMUNITION, DEFENSE BIOLOGICAL RESEARCH MATERIAL, AND OTHER TOXIC SUBSTANCES

9-1. General Information. This chapter gives safety precautions and procedures for storage and handling of chemical ammunition and other toxic substances. It is not intended to replace formal training and does not discuss specific munitions, agents, or toxic substances. Detailed precautions and instructions for handling materials and equipment are given in the 11-series and aircraft technical orders (TO).

9-2. Hazards and Safety Requirements. Chemical ammunition and agents (here referred to as chemical ammunition), biological research material, and other toxic substances present hazards which are discussed here. The United States does not maintain a biological weapon capability. Biological material is generally only transported, stored, and disposed of for defensive laboratory research studies or as captured enemy munitions. When it is received for transport or storage, it is subject to the requirements of paragraph 9-17 and the same requirements as toxic chemical ammunition.

a. Toxic Chemical Ammunition:

(1) Some chemical agents are odorless and not readily detectable, except by use of sophisticated equipment, when dispersed in diluted gaseous form. Spilled nerve agents can penetrate into pores of many materials, including metal. Initial decontamination operations may only remove the surface contamination. These materials may become recontaminated if the agent works its way through the pores to the surface or if exposed to heat. Repeated tests and decontamination may be needed to ensure safety.

(2) Toxic chemical ammunition may be available as binary chemical munitions where the essential nontoxic elements are physically separated. The safety of the binary system reduces the hazard in the production, storage, transportation, and handling of chemical weapons. Where possible, binary chemical ammunition will be used instead of unitary chemical ammunition. When the elements of a binary chemical munition are packaged and stored in separate buildings, they are handled and classified according to their industrial chemical hazard rather than as toxic chemical agents. Safety and security measures will be taken to make sure the essential elements are not combined.

(3) Incapacitating psychological chemicals produce two types of temporary effects:

(a) Physical disability, such as paralysis, blindness, or deafness.

(b) Mental aberrations similar to acute psychosis, LSD ingestion, and delirium tremors.

b. Other Toxic Substances:

(1) Incendiaries and smokes are primarily a fire hazard, but inhaled fumes may cause respiratory problems. Looking at burning munitions which contain magnesium or thermite may impair vision.

(2) Riot control agents may cause temporary irritation of the eyes or respiratory system. Unprotected personnel may be incapacitated until removed from the agent source. Normally, clean air will relieve the symptoms in a short period of time.

(3) Vegetation control chemicals (defoliants) are concentrated forms of weed killers. Normally they are not toxic unless absorbed, inhaled, or ingested in large doses.

9-3. Medical Aspects:

a. The director of base medical services (DBMS) is responsible for medical support and plans which deal with medical problems involving chemical agents. This includes bioenvironmental engineering and treatment of casualties.

(1) Baseline physicals and other medical protective measures for personnel whose duties involve possible exposure to chemical agents will comply with current Air Force Surgeon General policies.

(2) The commander responsible for the munitions operation should make sure the DBMS has the names of personnel handling agents and the chemical agent identification.

b. The DBMS will give unit training personnel technical or professional help to make sure personnel are taught first aid measures. In chemical agent mishaps, prompt first aid and self-help techniques taught in "buddy care" training can save lives and reduce suffering. Training must emphasize:

(1) How to recognize symptoms.

(2) Management of toxic effects of all agents.

(3) Artificial respiration.

(4) Personal hygiene.

c. The DBMS will develop programs for monitoring personnel exposed to any chemical agents.

d. Supervisors will get the help of DBMS in writing local written procedures and plans which involve chemical agents and toxic substances.

(1) People who are grossly contaminated by chemical agents must be decontaminated immediately and before admission to medical facilities.

(2) Preliminary decontamination may consist of cutting away the contaminated clothing and decontaminating the exposed skin area. Then, reclothe the victims or wrap them in blankets, and transfer them to the medical facility.

9-4. Safety, Control, and Surveillance of Chemical Ammunition and Agent Operations:

a. Analyze chemical operations to show any high hazard procedures and preplan emergency actions to take in the event of a mishap. Prepare written procedures in advance and list the agencies to be notified in case of a mishap, with their phone numbers.

b. Compliance with TOs is mandatory. If it appears certain that compliance will be impossible, get prior written deviation approval from proper authorities.

c. No single individual will be given access to toxic chemical ammunition or areas which contain this ammunition.

d. Before starting a toxic chemical operation, one person will be designated as the safety supervisor. This person will:

(1) Keep safety surveillance over an operator or crew during all phases of hazardous operations.

(2) Immediately notify the required agencies in case of a mishap and help in initial decontamination.

e. The safety supervisor should normally be stationed upwind from the operation, to watch all phases of the operation and to help in an emergency.

f. Communication facilities will be provided so the safety supervisor can notify required agencies in case of a mishap.

g. The safety supervisor will wear the protective equipment required for storage and handling (table 9-1) based on the chemical operation in progress.

h. Exposure time for personnel involved in a chemical agent mishap must be reduced to a minimum. To ensure prompt evacuation in case of a mishap, supervisors will make sure personnel involved in chemical operations have a "buddy system." The uninjured person will put on protective equipment and then help others evacuate to a safe, upwind area. A mild exposure of two individuals is preferred to a high dose for only one person, since medical treatment is highly effective against low doses.

9-5. Personnel Protective Equipment:

a. Persons entering an area which contains toxic chemical munitions must have a fitted protective mask, other protective clothing as shown in table 9-1, and individual first aid kits as applicable. The mask need not be worn at all times but must be kept within arm's reach for use in an emergency.

(1) Until binary ammunition is assembled as a toxic weapon, the individual chemicals will be handled using the protective equipment the chemical requires (AFOSH Standard 161-1, Respiratory Protection Program). The agent that the functional ammunition produces will determine what protective equipment is needed.

(2) For all toxic chemical munitions operations, the following are required:

(a) Inspect protective equipment regularly to make sure it is in proper working order. Replace unserviceable equipment promptly.

(b) Use wind direction indicators (such as strands of string or plastic tape) at the site of all toxic chemical operations. This is to give local wind direction and aid evacuation to a safe area upwind of any contamination.

(c) If the toxic chemical ammunition is suspected of being contaminated or is under development tests, use the protective equipment for a decontamination operation. This also applies to items returned from an operation (such as a spray tank or dispenser) where they have been exposed to contamination.

(d) Immediately report any mishap, suspected leakage, or toxic symptom to a supervisor.

b. The chemical warfare defense ensemble was designed to protect personnel from toxic agent gas or vapor exposure. Some protection is provided against direct contact with liquid agent; however, protection time is only a few

minutes after contact occurs. In some situations involving toxic chemical munitions, contact with liquid agent is highly improbable. In these cases, the chemical warfare defense ensemble may provide adequate protection and may be substituted for other protective equipment (table 9-1). For example, the operator of a forklift loading a contaminated or leaking munition into a container could wear the ensemble if liquid agent contact is improbable. A dearm crew safing a returned, expended spray tank would require full set I protective equipment because of the possibility of contact with liquid agent.

c. Personnel will use caution at all times in approaching or handling toxic chemical ammunition. When conditions are likely to be unfavorable, take extra precautions and monitor personnel constantly for symptoms of exposure from an undetected leakage. Conditions are likely to be unfavorable when:

(1) First entering storage magazines where agents have been in enclosed storage for an extended period.

(2) Agents or ammunition are being removed from shipping containers.

(3) Agents or ammunition are involved in mishaps, especially when the primary container may have been ruptured.

9-6. Decontamination Requirements:

a. Prescribed decontamination equipment and supplies will be available at each base that stores, handles, transports, or uses chemical munitions. The equipment must be kept serviceable. It should be operated periodically to check serviceability. During maintenance or training, water may be used in power-driven equipment instead of decontamination solution unless prohibited by the specific item TO. After such operations, return the equipment to standby status.

b. Decontamination personnel and equipment will be in a ready status when toxic chemical ammunition is outside of its shipping container. For example, munitions maintenance, fusing, and loading on aircraft.

(1) Decontamination personnel will be dressed in protective clothing to respond immediately in case of a mishap. However, clothing need not be completely sealed up.

(2) To avoid accidental injury or contamination, these personnel and their equipment must be placed in a safe area upwind of any chemical operation.

(3) If simultaneous operations are to be done at remotely separated locations, more than one group of decontamination personnel and equipment should be available.

9-7. Transit Handling Requirements.

a. Chapter 7 applies to transportation of chemical ammunition and agents. All shipments must be packaged as stated in AFRs 71-4 and 75-2. These directives are based on policies set up in:

(1) Title 49, CFR, or Bureau of Explosives Tariff No. BOE 6000-A.

(2) Title 42, CFR, Part 72.25, Etiologic Agents.

(3) Agreements between DOD, the Department of Health and Human Services, and the Department of Agriculture.

(4) Official Air Transport Restricted Articles Tariff No. 6D (International Civil Aviation Organization No. 37 CAB No. 82).

b. Toxic chemical ammunition and agent containers must be tested or inspected before shipment and on receipt for evidence of leakage. Only serviceable or sealed items will be shipped. The consignor will provide a certificate (according to transportation directives) that packaging and inspection criteria have been met.

(1) Where possible, containers will be tested before filling. "Primary" shipping containers will meet hydrostatic tests and valve inspection criteria in the applicable TO.

(2) Previously filled ammunition and containers must be tested for leakage or inspected before packaging.

(3) Packaged items must be inspected externally for evidence of leakage or rough handling before shipment and upon receipt. If there is evidence of rough handling, make a leak check. If the check is negative, open the package and examine the container. (See paragraph 9-9 for unpackaging precautions.)

c. When certain chemical ammunition and agents are shipped, they must have technical escorts as directed in AFR 136-4 and TO 11C15-1-2. Emphasis on preplanning the operation should include:

(1) Loading, unloading, and intransit holding of chemical-loaded aircraft or vehicles.

(2) Labeling cargo and aircraft or vehicles, in accordance with appropriate instructions.

(3) Briefing personnel on hazards involved and making sure all crewmembers have protective masks.

(4) Reviewing disaster plans and equipment to ensure coverage of the specific agent.

(5) Following procedures in AFR 55-14.

(6) Ensuring complete movement plans to cover operations from consignor to consignee.

(7) Giving advance notice to emergency bases and installations en route.

d. In case of an airborne mishap, the aircraft commander will declare an emergency and land at the nearest suitable airfield, preferably military. Notifications will be made through MAJCOM as required by the Air Force 55-series directives.

9-8. Requirements for Storage of Toxic Chemical Ammunition.

a. Chemical ammunition can be stored in two different configurations: As a self-contained end item or in a sealed shipping container. The requirements for entry into storage structures, checking for presence of agent, handling, etc., are essentially the same for both storage configurations. Storage structures which contain chemical ammunition are not usually considered contaminated. However, where nerve agents are involved, a sample for possible contamination will be taken before unprotected personnel enter storage structures.

b. The person making initial entry will:

(1) Wear the minimum protective equipment for storage and handling as prescribed in table 9-1.

(2) Test for nerve agent, if nerve agents are being stored.

(3) Avoid touching any item inside the structure.

(4) Make visual checks for agent leakage from the munitions. If sampling equipment and storage configuration allows, all munitions seams should be checked.

(5) Spend a minimum of time within the structure while making the initial test and checks.

c. When the absence of agent leakage or contamination has been verified, unprotected personnel may enter the storage structure. However:

(1) Toxic chemical agent detection equipment will be used inside the igloo while the workers are present. If electronic detection equipment is available, it will be used continuously in the igloo.

(2) If the M-18 sampling kit is used, an original sampling of the munition seams will be made. Followup samples will be taken if the ammunition shows any evidence of rough handling.

(3) If possible, use detection equipment to make contamination checks and observe every worker for symptoms of exposure to a nerve agent.

(4) If the presence of leaking nerve agent is suspected, all unprotected personnel must evacuate the work area immediately, and protected personnel will make sure the storage structure is closed at once.

d. If no leakage or contamination is found or suspected, ammunition may be moved to the munitions assembly and preparation area.

e. When storing toxic chemical munitions, notify the following personnel of location and type:

(1) Director of Base Medical Services.

(2) Base Disaster Preparedness Office.

(3) Base Chief of Safety.

(4) Base Fire Chief.

(5) Base Chief of Security Police.

9-9. Chemical Ammunition and Other Toxic Substance Unpackaging and Preparation Requirements.

a. General. Unpackaging and ammunition preparation operations present one of the highest potential exposure sources where personnel may accidentally contact chemical agents. Workers opening containers, installing components, performing checkouts, etc., may contact an agent leaked from a damaged or defective munition. The following precautions will be taken:

(1) Review the munitions TO before all handling to make sure workers are aware of protective equipment, first aid, and fire protective measures.

(2) Only those personnel required to work on a chemical munition will be allowed in the immediate work area.

(3) Toxic chemical ammunition should be unpackaged and assembled in the explosives storage area.

(4) Decontamination equipment and solutions, as well as heavy plastic bags or cans for storing contaminated equipment and clothing, will be available at the work site, if applicable.

(5) Those individuals who are working with toxic ammunition will remove all personal items (such as watches, rings, and billfolds). Such items could be subjected to destructive decontamination or disposal procedures.

b. Removal of Toxic Chemical Ammunition from Shipping Containers with Sampling Openings. If a chemical ammunition shipping container has a sampling opening, an agent analysis will be made to detect contamination before the container is opened. As a minimum, protective mask and butyl rubber gloves will be worn during such sampling.

(1) If there is a leak of an agent in the sample, do not open the container until decontamination action is taken.

(2) If agent presence is not shown by the sample, protected personnel may open the shipping container, visually inspect for leakage, and take more samples.

(3) If there is no evidence of leakage, unprotected personnel may continue the munition preparation sequence or other tasks stated in the TO.

(4) If agent leakage is detected, protected personnel will reseal the container and put it in isolated storage for decontamination or disposal.

c. Removal of Compatibility Group K Lethal Chemical Ammunition from Shipping Containers Without Sampling Openings. When opening containers without sampling openings, workers must use proper protective equipment for storage and handling as specified in table 9-1. After the lid or cover fasteners are removed, open the cover slightly so an air sample can be taken before the cover is completely removed. While doing this, the rest of the munitions crew (without protective equipment) will remain upwind. After sampling, take the actions described in b above.

d. Removal of Compatibility Group K Incapacitating Chemical Ammunition from Shipping Containers. Use protective masks and gloves when opening shipping containers which have psychochemicals. If there is no evidence of leakage after visual inspection of the inside of the container, masks may be removed. Keep masks readily available during other handling procedures.

e. Removal of Compatibility Group G Riot Control and Smoke Ammunition from Shipping Containers. Workers need not wear a protective mask and gloves while opening shipping containers but must keep them available. If leakage is suspected, they must wear mask and gloves and not touch the eyes or mouth until after cleanup. They should not work downwind of the shipping container during opening and inspection.

f. Removal of Compatibility Groups G, H, and L Smoke and Incendiary Ammunition from Shipping Containers. There is a potential smoke and fire hazard in handling or opening these shipping containers. The munition should be inspected for leakage, discoloration, or smoke. Special emphasis is needed on the treatment of phosphorus and other chemical burns. A water container must be available to immerse phosphorus munitions in case they leak. However, triethyl aluminum and the incendiaries should not contact water, and alternate decontamination procedures should be stated.

9-10. Preparation and Transportation of Toxic Chemical Ammunition to the Flightline. Only trained and qualified personnel will perform preparation and transportation tasks. They must observe these rules:

a. After these chemical munitions have been removed from their shipping containers and decontaminated or declared clean, personnel working with them need not wear protective clothing.

b. Decontamination personnel and equipment will remain in ready status during the unpackaging and munitions preparation operation.

c. Munitions preparation and testing will be done as directed in 11-series TOs.

d. Only approved munitions handling equipment will be used to move these chemical munitions to the flightline.

e. These chemical munitions will be transported over the same movement routes used for other explosive items on base (paragraph 7-15).

f. If possible, these munitions should be loaded directly on aircraft. However, they may be held in a ready explosives facility for minimum periods of time, where needed, if:

(1) The facility or cell contains no other explosive items.

(2) The facility gives protection at least equal to a barricade for the chemical munitions. This is to minimize possible penetration by fragments from outside sources.

(3) The facility is guarded.

(4) The facility is downwind of critical personnel and resources, where possible.

g. Workers need not wear protective equipment while transporting these munitions to the flightline, but the equipment will be immediately available.

9-11. Loading and Unloading Toxic Chemical Ammunition on Combat Aircraft:

a. These chemical munitions will be loaded according to approved loading checklists. They will be loaded by qualified munitions loading crews in a designated aircraft parking area. Loading personnel need not wear protective clothing. However, decontamination personnel and equipment will remain in ready status until the loaded aircraft takes off or they are relieved.

b. In case of aircraft abort or failure to release for any reason, use the following unloading procedures:

(1) Aircraft Ground Abort. These munitions will be safed, unloaded, and returned immediately to the storage area or ready explosives facility, or loaded on another aircraft.

(2) Air Abort Before Munition Function. Returning aircraft will go to the arm/dearm area. If possible, this area will be downwind from critical personnel and resources. Munitions will be safed and visually checked by workers in protective clothing. If they find no damage or leakage, the aircraft will go to the designated parking area and the munitions handled as in (1) above. If there is damage or leaking, workers in protective clothing and equipment will sample the aircraft and munition for contamination. If either is contaminated, paragraph 9-12 will apply. If the munition is damaged but there is no contamination, the item may be unloaded in a designated parking area.

9-12. Unloading Contaminated or Malfunctioned Ammunition. Fired chemical dispensers are usually jettisoned in approved areas. However, if "empty" chemical munitions dispensers or spray tanks are returned from a combat mission after the firing circuit has been activated, the following apply:

a. Disaster response forces or other trained personnel should be in a ready status, with protective clothing, as prescribed in disaster preparedness plans.

b. The runway will be checked for agent spills. It will be decontaminated as needed.

c. Munitions personnel wearing the proper protective clothing for decontamination operations will meet the aircraft at the arm/dearm area. They will carry out system safing, using plugs, caps, or other safing techniques prescribed by the TOs, to prevent agent leakage. They will test the munitions and aircraft for contamination.

(1) If there is no contamination, the aircraft and munitions may be taken to the designated parking area for unloading.

(2) If contamination is present, a heavy conductive plastic bag will be slipped over the munition. The bag will be taped firmly in place to prevent the spread of contamination while the aircraft is towed to the decontamination area.

d. Munitions personnel will unload the returned munition at the decontamination location, cover the munition with more uncontaminated plastic bags, and seal them with tape. This will be done before turning the munition over to EOD personnel for disposal.

e. Decontamination of aircraft may be needed. Individual aircraft TOs tell which areas of an aircraft and munitions have priority for decontamination. External decontamination does not unconditionally release aircraft from further controls. Contamination by any persistent chemical agent must be documented in appropriate aircraft records. If the arm or dearm area is contaminated, it must be decontaminated.

9-13. Disposal of Damaged or Leaking Chemical Ammunition.

a. The commander may direct the disposal of any chemical munitions that are an immediate threat to personnel or assigned resources. EOD personnel will dispose of the munition using approved technical procedures. When the leak is small and readily controllable, the munitions should be isolated. The hazard should be confined to a shipping container or a segregated magazine identified as "contaminated/ dangerous." Disposition instructions are in AFM 67-1, volume I, part 1.

b. When toxic chemical munitions have been decontaminated, the residual metal components will not be certified for release through redistribution and marketing channels. Burn any combustible packaging material which may have come in contact with the agent using incinerators that can decompose the agents completely without harmful toxic emissions.

c. The residual metal components from these toxic chemical munitions are disposed of as follows:

(1) All shipping containers are to be decontaminated, marked, and returned as directed by OO-ALC/MMW, Hill AFB UT 84056-5609.

(2) If possible, metal components should be cut up or crushed flat to reduce total volume. The metal will be packed in a marked, sealed shipping container and returned to a designated site within CONUS. Contact OO-ALC/MMW, for further instructions. Escort is not mandatory.

9-14. Jettison Area for Defective or Leaking Toxic Chemical Ammunition. Because of the extended downwind hazard of chemical munitions, special emergency jettison areas should be preselected. The selection should be based on probable emergency conditions, weather (wind direction, temperature gradient), and the location of operating areas, friendly forces, or civilian populations. (For flight procedures and criteria for jettison areas, see 55-series publications.) Items dropped in this area should be checked and safed by EOD personnel. At the discretion of the local commander, the items may be decontaminated near the site of the impact.

9-15. Safety Requirements for Leaking Toxic Chemical Ammunition. If there is any evidence that toxic chemical agents are escaping from a munition, container, or conveyance, the following criteria apply:

a. All personnel will immediately put on protective masks and evacuate the area. Evacuation routes should be upwind from the source. Unprotected personnel will not be needlessly exposed to the agent for the sake of closing doors, vents, etc. Buddies will help each other move to a safe area (paragraph 9-4h).

b. Base disaster preparedness plan will be implemented as required.

c. Every effort will be made to control the leak and confine exposure to the smallest area possible. If possible, personnel will place the leaking munition in a container capable of being sealed and seal it to prevent further contamination.

d. Personnel who may have come in contact with the agent will be isolated and decontaminated before reestablishing contact with other personnel.

e. Promptly send the names of every person in the area at the time of the incident to the DBMS. Identify each one who may have come in direct contact with the agent.

9-16. Filling Chemical Ammunition. The preferred method of preparing chemical ammunition is factory filling. This method reduces the need for combat area equipment and trained personnel and avoids the hazard of contaminating friendly areas. However, if logistical or operational requirements make field filling necessary, plans for facilities, design, and siting must be sent to HQ AFISC/SEWV, Norton AFB CA 92409-7001.

a. Chemical ammunition should be filled as follows:

(1) Filling will be done in a room that is under negative air pressure compared to the surrounding area

(2) All air exhausted from the room will be filtered or decontaminated.

(3) A closed system connection will be used from the bulk agent container to the munition.

(4) Workers in the area must wear a full suit of impermeable protective clothing and wear a protective mask or have a separate air supply.

(5) Facilities must be available to decontaminate personnel and material before they leave the work area.

(6) Facilities will be available to concentrate or destroy all solid and liquid waste material that is produced in the work area.

b. When above facilities are not available in an emergency or on a temporary basis, an open-field site at a safe downwind distance from personnel and critical resources may be substituted. The downwind air dilution must compensate for the lack of walls and exhaust filters and all other criteria above will apply.

9-17. Handling, Transportation, and Storage of Defense Biological Research Material:

a. Biological material can be handled as chemical agents; however, biological agents in transit and storage must meet special packaging requirements (AFR 71-4) and may have to be kept at low temperatures (AFM 355-6).

b. Biological shipments will be accompanied by a courier who is competent to give instructions in the special handling, storage, and transit of this material (AFR 136-4).

c. The consignor will furnish the MAJCOM a statement of the material involved, the method of decontamination and packaging, and precautions to be taken in moving the material.

Table 9-1. Chemical Agents.

COMPATABILITY GROUP	FIRE PROTECTIVE CLOTHING SYMBOL Note 6	TYPE AGENT	SYMBOL	NAME OF FAMILY OF CHEMICAL AGENTS	MUNITION MARKINGS			REQUIRED PROTECTION	
					Back-ground Color	Lettering	Bands Note 1	Storage & Handling Note 7	Decontamination Note 6, 9
CHEMICAL AGENTS AND MUNITIONS									
K	Set 1	Nerve	G Note 2	Tabun	Gray	G Note 2	Green	Note 7a	Note 6a, 6abc
K	Set 1	Nerve	VX		Gray	VX	Green	Note 7a	Note 6a, 6abc
K	Set 1	Blister	H Note 2	Mustard	Gray	H Note 2	Green	Note 7a	Note 6a, 6ab
K	Set 2	Psycho	BZ		Gray	BZ	Purple	Note 7a	Note 7a, 6ab
TOXIC SUBSTANCES AND MUNITIONS									
G	Set 2 Note 8	Tear	CN	Chloroacetophenone	Gray	CN	Red	Note 7a	Note 6b, 9b
G	Set 2 Note 8	Tear	CNB	Liquid Chloro-acetophenone	Gray	CNB	Red	Note 7a	Note 6b, 9b
G	Set 2 Note 8	Tear Vomiting	CNDM	Combination CN and DM	Gray	CNDM	Red	Note 7a	Note 6b, 9b
G	Set 2 Note 8	Tear	CS, CS-1, CS-2	.O-Chlorobenzal-Malononitrile	Gray	CS	Red	Note 7a	Note 6b, 9b
G	Set 2	Vomiting	DA	Diphenylchlo-rarsine	Gray	DA	Red	Note 7a	Note 6b, 9b
G	Set 2	Vomiting	DM	Adamsite	Gray	DM	Red	Note 7a	Note 6b, 9b
G	Set 2	Smoke	FM	Titanium Tetrachloride	Lt Green	FM	Note 4	Note 7a	Note 6b, 9b
G	Set 2	Smoke	FS	Sulfur Trioxide Chlorosulfonic Acid	Lt Green	FS	Note 4	Note 7a	Note 6b, 9b
G	Mask Note 5	Smoke	HC	Hexachloroethane	Lt Green	HC	Note 4	Note 7b	Note 6b, 9b
G	Mask Note 5	Incendiary	PT	Incendiary Mix	Lt Red	PT	Note 4	Note 7b	Note 6d
G	Mask Note 5	Incendiary	TH	Thermite	Lt Red	TH	Note 4	Note 7b	Note 6d
J	Mask	Incendiary	NP	Napalm	O.D.	NP	Red	Note 7b	Note 6d
L	Set 3 Note 5	Smoke	TEA	Triethyl-Aluminum	Lt Green	TEA	Note 4	Note 7b	Note 6c
H	Set 3	Smoke	WP	White Phosphorus	Lt Green	WP	Note 4	Note 3, 7b	Note 3, 6c
H	Set 3	Smoke	PWP	Plasticized White Phosphorus	Lt Green	WP	Note 4	Note 3, 7b	Note 3, 6c

NOTES:

1. Munitions marking bands: 1 green-nerve; 1 purple-psychochemical; 1 red-riot control; 1 yellow-high explosives; 1 brown-low explosives; interrupted bands- binary explosives or agents (TO 11A-1-53).

2. Specific agents within the chemical family will determine the second symbol and markings (AFR 355-7).

3. WP and PWP. Water supply (such as barrels) and wash basins will be available.

4. Refer to TO 11A-1-53 for smoke munitions not presently marked with bands.

5. Post the fire direction symbol (figure 3-3) for "Apply No Water" also. This requirement is based on possible violent chemical reaction or danger of spreading the fire.

6. Post the chemical hazard symbol from figure 3-2. For firefighting, the indicated protective clothing must be worn.

a. Wear Set 1 (red on blue sign). This set consists of gas mask, M9 series; impermeable suit (coveralls, hood, gloves, firefighter's boots, and boot covers) (TO 14P3-1-7). The chemical warfare defense ensemble with M17 series mask may be substituted where contact with liquid agent is highly improbable (paragraph 9-5b).

b. Wear Set 2 (yellow on blue sign). This set consists of: self-contained breathing apparatus (SCBA); coveralls; protective gloves. (Firefighting protective clothing and equipment may be used.)

Table 9-1. Continued.

c. Wear Set 3 (white on blue sign). This set consists of flame resistant coveralls; flame proof gloves; and SCBA. Used primarily with white phosphorus and triethyl-aluminum. (Firefighting protective clothing and equipment may be used.)

d. Wear Breathing Apparatus (Mask) (white on blue sign). Self-contained or recirculating breathing apparatus must be worn. (Firefighting protective clothing and equipment may be worn.)

7. The protective equipment listed below must be readily available but need not be worn until an emergency situation requires its use. The masks are suitable only in light smoke environments as eye and face protection where oxygen is available. They should be used to provide minimal protection to place a defective item in water or to remove it from the vicinity of other explosives. In high smoke concentrations, fire department, EOD, and emergency rescue personnel should use self-contained breathing apparatus (SCBA).

a. Gas mask (M9 or M17 series) or SCBA and butyl/impermeable gloves. These will be worn for decontamination and suspected agent contamination.

b. Gas mask (M9 or M17 series) or SCBA, flame proof gloves, and covering for the skin must be worn when handling leaking items. When fire or light smoke concentrations are present, don mask, clear area, and call fire department.

8. Only the mask symbol need be displayed where riot control agents are stored in arms rooms and other such locations. (See paragraph 4-12c(2) for protective clothing requirements.)

9. Additional precautions for decontamination apply as noted.

a. Make decontamination shower available.

b. Make decontamination equipment available; see paragraph 9-6.

c. Have ambulance stand by in an adjacent uncontaminated area.

d. Call fire department, isolate area, and eliminate sources of ignition. Wear gas mask if smoke is present and entry is required.

Chapter 10

SPECIAL CRITERIA FOR MANUFACTURING, LOADING, RESEARCH, DEVELOPMENT, AND TESTING OF EXPLOSIVES

Section A—General Criteria

10-1. General Information. This chapter states safety requirements for the manufacturing, loading, research, development, and testing of explosives. These are in addition to other requirements in this regulation. (See paragraph 1-5a on how to apply this regulation to contracts.)

10-2. Building and Construction. Follow the guidance in chapters 3, 6, and 8 in enforcing policy in buildings where explosives are manufactured or processed.

10-3. Protective Clothing and Equipment. Follow the instructions in AFOSH Standard 127-31. Protecting workers from industrial hazards and preventing explosives contamination to the body and areas outside of the explosives operating area require special clothing and equipment.

a. Workers who must wear protective clothing must be provided with showers or wash areas (suitable to the hazard) and space in a clear area for street clothes storage. Supervisors must make sure that workers are aware of and maintain proper safety habits and health standards.

b. Work clothing must be suitable to the task and hazard involved.

(1) Garments and head coverings should be made from tightly woven, smooth fabric. They should fit snugly around the waist, wrist, and neck but should not be so tight that they irritate the skin or cause dermatitis.

(2) Garments must use nonmetallic fasteners and be easily removable. Pockets should be of the lattice type. Trouser or slack legs should be tapered, without cuffs, and should extend over the top of shoes or boots. Sleeves should be tapered and without cuffs.

(3) Goggles and eye shields must comply with AFOSH Standard 127-31. They must not be made of nitrocellulose or any highly flammable material.

(4) Sweatbands should be worn to prevent perspiration from falling on materials susceptible to ignition by moisture.

(5) Hair should be covered and restrained to prevent contamination or entanglement with machinery.

10-4. Operational Shields. Operational shields and related remote-controlled devices will be used where required to protect personnel and materiel. Protection is needed from potential hazards such as explosion, fragments, fire, pressure rupture of cases, and high velocity, high temperature gas streams from thrust units.

a. The requirement for shielding varies with the circumstances of the operation. The commander or plant manager must determine the requirement based on a thorough technical analysis of each situation.

b. Shields are usually not required in typical operations. This includes storage, shipping, handling, or authorized maintenance involving standard serviceable explosive items being provided to Air Force units. Refer to the TO covering the specific operation.

c. Shielding is required in certain manufacturing, assembly, disassembly, testing, renovation, or disposal activities where significant hazards exist. If the hazard justifies, remote control equipment and closed circuit television should be provided.

d. Suitable shielding may require steel plates, reinforced concrete walls, or shelters such as "dugouts." The design and location of the shielding and shelters would depend on the quantity and type of explosives being processed.

(1) Some suppressive shielding techniques are available which can vent gases and shock waves. These can greatly reduce damage to structures and prevent the release of fragments.

(2) Multiple deflection panels can be built into a suppressive shielding door to retain most of the fragments. Also, concrete or armor plate can be used at strategic locations to retain large or high-speed fragments. This technique makes it possible to design operating facilities (particularly with smaller explosive charges) that permit reduced separation distances (table 12-1).

(3) Some operating facilities have three walls and a roof that will withstand the force of the explosion without creating secondary frag-

ments due to spalling. Use inhabited building distance for the open or frangible wall in a 60-degree arc on each side of the centerline from the mouth of the facility.

(4) The sides and rear of this facility may be part of a laboratory building. However, there must be a buffer zone or a second substantial dividing wall between the laboratory and other nonrelated areas.

(5) In the absence of reliable data, the adequacy of proposed shielding must be proven by actual tests before use. The tests should use quantities that are 25 percent greater as a safety factor. Tests may be done only by AFSC or AFLC or by an agency approved (or delegated) by them.

10-5. Quantity-Distance (Q-D) Requirements. Facilities for the manufacturing or processing of explosives must be planned and built to conform to the latest safety requirements. This also applies to temporary facilities.

a. Separation of Operations and Buildings:

(1) Manufacturing and processing will be done in a special area whose boundary is separated from all other areas by inhabited building distance.

(2) Personnel exposed to remotely controlled operations (including control stations for operations provided with blast-attenuating and fragment-defeating shields) shall be provided with PTR equivalent protection (2.3 psi).

NOTE: This protection is required from all remotely controlled operations to all exposures with people normally sited at K18.

(3) When several manufacturing or processing operations are located in the same building, individual hazardous operations will be separated from each other and from all nonhazardous operations. Where operationally feasible, intraline distance separation should be provided between each hazardous operation. Give as much additional protection as possible in separating operations and minimizing the results of any accident. Requirements for remote controls and personnel protection in specific propellant processing operations are in table 10-1.

(4) The required separation between buildings (sites, pads, or other such locations) which form a single production or operating line is as follows:

(a) Between two buildings containing explosives: intraline distance based on the building requiring the greater distance (except as in (c) and (d) below).

(b) Between an explosives building and a building in which nonexplosives line operations are done: intraline distance based on the amount of the explosives in the building.

(c) Between an explosives service magazine and individual operating line buildings being served: intraline distance based on the explosives in the service magazine as a minimum.

(d) Between a curing facility and the individual operating line buildings being served: intraline distance based on the explosives in the curing facility as a minimum.

(e) Between an operating building and a normally uninhabited nonexplosives facility (such as paint and solvent storage) serving a single operating building: at least 50 feet. Intraline distance, if greater, is preferred.

(5) A nitroglycerin processing line may be treated as a part of a propellant processing line. Also, nitrocellulose operations preceding the mixing with nitroglycerin may be treated as a part of a propellant manufacturing line. The nitroglycerin and the nitrocellulose lines, therefore, may be located at intraline distance from the propellant manufacturing line and from each other. In future construction, the three types of lines should form a "Y."

(6) Operating lines will be separated by a minimum of intraline distance. This distance is based on the explosives in the line requiring the greater separation.

(7) Explosives batch mixing operations will be done in separate buildings or bays used exclusively for that purpose as follows:

(a) Large mixing operations will be located in separate buildings.

(b) Small mixers should be in separate buildings. However, they may be located with other operations if the mixer is in a separate bay which is isolated by substantial dividing walls (or barricades). It must have enough operational shielding to protect the other operations.

(8) When the hazard classification of an explosive has not been established (c below and TO 11A-1-47), the explosive during site and construction planning should be classified as follows:

(a) As the most hazardous class/division (chapter 5) that might possibly apply during the stages of processing.

(b) As a class/division 1.1 explosives, if a lesser upper limit (classification) of the possible range of the hazard cannot be clearly supported.

Table 10-1. Remote Control Requirements for Certain Propellant Processing Operations.

OPERATION[1]	REMOTE CONTROLS[2]
Blending and screening of ammonium perchlorates	Advisory
Blending, screening of perchlorates other than ammonium	Mandatory
Grinding and mechanized drying of perchlorates	Mandatory
Grinding, blending, screening and mechanized drying of ammonium nitrates	Advisory
Propellant mixing	Mandatory
Cutting, machining, sawing, planning, drilling, or other unconfined operations involving large quantities (over 15 lbs) of propellant[3]	Mandatory
Cutting, machining, sawing, planning, drilling, or other unconfined operations involving small quantities (15 lbs or less) of Q-D Class/ Division 1.3 propellants	Advisory
Pressing, extruding, or other confined operations	Mandatory
Casting Propellants	Advisory

NOTES:

1. For personnel protection see paragraph 10-4.

2. Personnel exposed to remotely controlled operations (including those as control stations) must be protected from airblast overpressure greater than 2.3 PSI (K24) and from hazardous fragments.

3. Where cast cure and finishing operations are conducted in pits below grade, Class/Division 1.3 distances may be used.

b. Explosives Safety Distance for the Separation of Solid Propellant Manufacturing or Processing Operations. Some solid propellants assigned to class/division 1.3 will react as class/division 1.1 propellants during manufacturing and processing.

(1) These operational steps will be separated from other operations by the Q-D limitations of class/division 1.1. Normal class/division 1.3 propellants will use table 5-3.

(2) Each step of the process must be reviewed and the potentially mass-detonating phases handled as class/division 1.1 propellant (table 5-1).

(3) If a fire occurs when stored in confined packaging or unvented shipping containers or rooms, some class/division 1.3 propellants may detonate.

c. Explosives Hazard Classification for Solid Propellant Manufacturing and Processing. (See TO 11A-1-47 for storage and transportation test procedures.) Before operations begin, determine the chemical and physical properties of the materials and their explosives hazard clas-

sification. Do this for each phase of processing, considering the condition or environment during the phase. Such determination is necessary to ensure the use of proper safety principles and explosives safety distances.

(1) If there are no reliable data on the hazard for an operation, use TO 11A-1-47 testing procedures for the required tests. Testing must cover ignition, unconfined burning, thermal stability, and sensitivity to detonation under the condition or environment. If the material produces (sustains) a detonation under such conditions, treat it as a class/division 1.1 explosive during that step of the process. This applies if it can produce a detonation either directly or indirectly through transition from a deflagration.

(2) Minimum testing may satisfy the classification requirements for several process positions. For example, for castable solid propellants:

(a) If reliable data indicate that the propellant mixing operations are class/division 1.1, no testing would be needed to adopt this classification.

(b) If testing shows that the uncured propellant will detonate, the casting and curing operations must be considered exposed to class/division 1.1 hazards.

(c) If detonation tests show that the cured propellant will detonate, all operations must be considered as exposed to class/division 1.1 hazards.

(3) Test may be done only by AFSC or AFLC or by an agency approved (or delegated) by them. Send results of such testing to HQ AFISC/SEWV, Norton AFB CA 92409-7001.

10-6. Castable Propellants:

a. Weighing, Measuring, and Handling Raw Materials. Scales for weighing raw materials will be electrically grounded, where needed, to properly protect the operation. Such grounds will have an equivalent current-carrying capacity not less than that of a No. 8 (0.128 inch) copper wire. This grounding is especially important where ammonium perchlorate and highly combustible materials are involved. Make sure that oxidizing agents are completely separated from combustible material, including metallic powders.

(1) At least two separate weighing or measuring rooms, properly equipped and identified, will be provided. The separate spaces will be used exclusively for the designated purpose.

(2) Vessels, sieves, and other equipment should be marked to designate the type of material with which they are to be used. They will be used only for that purpose.

(3) The designated use of spaces and equipment will not be changed without a thorough cleaning and inspection to make sure that all traces of the previous material have been removed.

b. Oxidizer Processing:

(1) General Information:

(a) Avoid contaminating an oxidizer agent with any metal or chemical which may result in a more sensitive composition. Exposure time, temperature, and moisture will govern the location or degree of using of metals and chemicals which will sensitize the oxidizer.

(b) If possible, use closed systems or facilities to eliminate dust and contamination from outside sources.

(c) Fabricate flexible connections (socks) in pipes or duct systems which convey oxidizer materials of fire-retardant, conductive materials. These materials must be chemically compatible with the oxidizers to which they will be exposed. The pipes and duct systems will be made electrically continuous. Flanged pipe connections are preferred.

(2) Drying Oxidizer Agents:

(a) The safe temperature for drying each material will be established and will not be exceeded at any point in the drying apparatus or drying room.

(b) Thermostatic controls will be used to prevent the maximum safe temperature from being exceeded in the drying apparatus or drying room. Install temperature recorders to keep a continuous and permanent record of all essential temperatures.

(c) Dust should be held to a minimum in drying rooms.

(3) Screening Oxidizers. When screening for process purposes, the screening equipment will be constructed so oxidizer material is not subjected to pinching, friction, or impact as a result of metal-to-metal contact. Rooms in which screening units are operated will be thoroughly cleaned daily, or more often if necessary, to eliminate hazardous accumulations of dust.

(4) Blending Oxidizers:

(a) When gases are released during blending of oxidizer batches, a suitable means of relieving the pressure will be designed into the blender.

(b) The blender will be electrically bonded throughout.

(5) Grinding Oxidizers:

(a) When impact-type mills are used, there must be enough clearance between stationary and moving parts to prevent metal-to-metal contact. Clearances will be checked as often as needed to ensure they are adequate. Operating the mill in an empty condition is only one way of detecting gross improper clearances. This method should not completely replace more refined methods in the schedule of preventive maintenance services.

(b) Oxidizer material will be passed through a screen mesh with openings no greater than the clearance between hammer and plate. Screen mesh size for ammonium nitrate should be the smallest that allows free flow of the prills.

(c) Use only compatible lubricants in perchlorate grinding equipment. Do not use organic solvents to clean such equipment.

(d) Determine the cleaning cycle and method for all grinding equipment and include in OIs.

(e) Provide grinding operations with wet dust-collection systems.

c. Preparation of Fuel Composition. Establish compatibility of materials. Incorporate controls to preclude mixing materials at a time or in a manner that would create sensitive compositions or hazardous conditions before processing.

(1) When nitrators, washers, and other machines are equipped with mechanical agitators (because of the hazards in the process or the possibility that the process material will decompose), they should have at least two means of agitation. Each one should operate from an independent source of power to maintain the action in event of a failure. A means of preventing any unfavorable exothermic reaction must be provided.

(2) The processing of toxic and flammable materials and nitration involves explosion, fire, and toxic hazards, in addition to the hazards of acid handling. Efficient ventilating systems are required. Nitration buildings must have adequate exits and safety appliances (such as suitable neutralizing solutions and emergency showers) where needed. Personnel should also be given proper acid resistant or protective clothing and equipment where needed.

(3) The formation and accumulation of dust must be minimized in all preparation oper-

10-7. Mixing of Fuel Compositions and Oxidizers (Batch Method):

a. Introduce oxidizer material into the mixer in a way that will minimize the formation of dust. It should protect against the uncontrolled discharge of static electricity.

b. To prevent extraneous material from entering the mixes, use such devices as magnetic separators or fluoroscopes. This may occur when dry solids cannot be screened before they are charged into the mixer or introduced in a slurry form.

c. Before and after use, inspect blades and other moving parts of new mixers and like replacement parts for old mixers. Inspect (magnaflux or x-ray) for cracks, crevices, and other flaws. Clearances between agitator blades and mixer bowls must be checked often enough to make sure the clearance is adequate. Keep a record of these checks, mixer blade adjustments, and any damage to the mixer blades and bowls.

d. In an emergency (such as breaking a mixer blade during mixing), use extreme care in removing the propellant because metal fragments may be present. In such cases, add a compatible liquid to form a slurry so the propellant may be removed easily from the mixer.

e. When consistent with the process system and requirements, place a noncombustible cover over the mixer bowl after charging operations are completed. This is to prevent the accidental introduction of foreign objects into the mixer.

(1) This cover should be lightweight metal or screen with mesh no greater than the minimum clearance of the mixer blades. The cover will be secured to the mixer housing in such a way that gases or vapors evolved during the mixing operation will not be confined.

(2) Hoppers and other means for charging mixers will not add to the confinement that inherently exists in such mixers. A properly designed closed system is acceptable. A system may be necessary to prevent loss of solvents, generation of unsafe solvent or toxic concentrations, or contamination.

f. Avoid spilling or splashing a propellant during discharge of mixers. Take special precautions in removing the propellant from the mixer (undue force could cause ignition).

g. Use only nonsparking devices to scrape down the sides and blades of mixers. Set up controls to prevent these and other devices from being accidentally introduced into the mixer.

sheet away from the rolls as soon as cut. (There is a danger of spontaneous ignition of freshly cut sheets.) The conveyor should be interlocked with the knife on the rolls so that the conveyor cannot be started until the knife is engaged. The conveyor will incorporate a forced air draft cooling system.

(10) Perform the cutting of the sheet from the differential rolls by remote control from behind a fire-retardant partition. The paste increments awaiting rolling also should be kept behind the partition. Allow no more than two increments at this location at any one time. Where the increments are fed to the rolls by remote control, an increment is allowed within the roll room while another is being rolled.

(11) Provide a drain trough of nonsparking material in each room to aid cleaning and to allow drainage after the deluge system has been activated. If the trough runs through two or more rooms, provide baffles in the trough at each wall. This is to prevent fragments of sheet propellant washing through adjacent rooms. Run the drain troughs into a catch box or sump outside of the building. Equip the catchbox or sump with baffles.

(12) In rooms where operations are done before the even-speed rolling operation, hot water jacket inspection and work tables so that cold and hard sheets are not introduced to the even-speed rolls.

(13) Do not allow finished sheets to accumulate in any room where operations are being done. Place the sheets in a separate room pending transfer to the next operation.

(14) Do not stack sheets on heated tables to a height that would prevent ventilation and might allow ignition. A limit of three sheets in thickness is recommended if the temperature of the sheets is above 150°F (66°C).

(15) Rolling operations may require the presence of an operator at the rolls during operations. Thorough training of roll operators is of extreme importance. Additional safety items which will be stressed to these personnel include:

(a) Keep rolls scrupulously clean and free of foreign material.

(b) Keep hands away from the bite of the rolls at all times.

(c) Never pull sheets from rolls. Allow sheets to fall freely to the tray after they are cut.

(d) Wear protective clothing at all times.

(e) Do not permit personnel to go into differential roll rooms while the sheet is being cut.

(f) Where conveyors are not provided beneath rolls, ensure operators wait for a specific cooling period before handling the propellant sheet.

(g) Do not carry newly rolled sheets in the arms. Use a tray provided for the purpose.

(h) Instruct even-speed roll operators in the proper method of folding sheets to prevent the formation of air pockets.

f. Forced Air Drying and Annealing:

(1) Where the sheet is dried after preliminary rolling and where finished grains are heat treated for castellating, drilling, and so forth, separate buildings should be provided for the heating stages. The source of heated air will be in a separate room. Do not recirculate air furnished to the drying rooms. Accurate instruments showing the temperatures inside the room should be provided on the outside of the drying room.

(2) Drying rooms must be free from spark-producing metals. Rooms lined with light sheet metal with welded seams should have the metal lining painted. Door hinges should be of wood construction. Wooden bar locks are recommended for doors leading into drying rooms.

(3) Where there is a risk of locking personnel inside a drying room, there must be an opening through the walls of the rooms at floor level. This opening must be closed with a nonsparking screen that can be easily kicked out or removed from the inside of the room.

(4) Rooms used for paste drying must be designed to facilitate complete washing down. Make provisions for the safe disposal of contaminated wash water.

(5) Dry paste is extremely sensitive to friction and impact. Moisten paste slightly before removal from the drying room. Stack paste containers only one tier high during drying and later transportation of the containers.

g. Carpet Rolling and Slitting:

(1) Provide separate rooms for each of the following: rest storage for incoming sheets, slitting operation, carpet rolling, and rest storage for outgoing propellant.

(2) Protect the slitting machine with quick-action deluge heads and equipped with guards to prevent injury to the operator's hands. Provide the cutting machine with a quick-action brake, preferably activated by a foot pedal extending the length of the machine.

(a) If a cutting device of sparking metal is used, the bed of the machine will be of nonsparking material. As an added precaution, the table or trough from which the sheets are fed into the slitting machine will be hot water jacketed. Slit sheets will either fall into a wall box servicing the carpet rolling room or pass directly through a slit in the wall to the next room.

(b) If the latter method is used, a guillotine-type sliding door will be suspended over the wall opening. This is to serve as a firebreak between the two rooms. Interlock the guillotine with deluge systems in the slitting and carpet roll rooms which is activated by a fire in either room.

(3) Provide a tool of nonsparking material for periodically cleaning the slitting machine. The tool will be long enough so that the machine can be cleared without endangering the hands.

(4) Pay particular attention to ventilation for carpet roll and slitting operations.

h. Extrusion Pressing:

(1) The hazards of this operation require it to be housed in a building of special construction. Details may be obtained from OO-ALC/MMW, Hill AFB UT 84056-5000. The layout and operation will be such that the operators are not in line with the long axis of the press ram. The wall toward which the die of the press is aimed should be of light construction and should face an unoccupied area or approved barricade.

(2) Personnel will not be allowed in or along-side the pressroom while the press is in operation. Entrance to the pressroom will be from the outside of the building. Provide a gate controlling entrance to the pressroom. Interlock the operation of the gate with the press ram control so the ram will not travel with the gate open. The ram control will activate signal lights at the gate and in the press control room to show all personnel when the press is in operation.

(3) All electric motors should be in rooms separated from the pressroom.

(4) The press house must have a service storage room for powder in carpet roll form. This room should be separated from the pressroom by a reinforced concrete wall at least 24 inches thick. Both faces will be reinforced with rods at least 1/2 inch in diameter, spaced not more than 12 inches on centers horizontally and vertically. Stagger rods on one face with regard to rods on the opposite face and ensure the rods are about 2 inches from each face.

(5) Operators will be trained to remove propellant "skin" from the ramhead and the interior of the cylinder. Operators also will ascertain that the vacuum outlet from the press is free from obstruction before each extrusion.

(6) Periodically operators will dismantle and clean out the vacuum line from the press with a solution that will decompose nitroglycerin.

i. Castellating, Milling, and Drilling:

(1) Install each major piece of equipment used to do these operations in a separate room. Operate the equipment by remote control from behind a noncombustible wall. This wall must be strong enough to protect operators from an incident involving all powder within the operating room. Interlock doors to the operating room with the machine so the machine cannot be operated while the door is open. The doors will have small vision ports of safety glass (or comparable material) at least 1/4 inch thick, so the operator can view the operation in safety. Direct line of sight is not allowed.

(2) Provide an exhaust system on each machine for collecting chips made by cutting tools. Each room must have individual wet collectors. Chips will be emptied from collectors as needed to prevent excessive accumulations and at least once each operating shift. Keep a log on all cleaning and maintenance operations done on collectors.

(3) Keep cutting tools sharp and ensure they are checked daily. Dull cutting tools will only be dressed by qualified personnel.

j. Trimming. Equipment for trimming the ends of grains will comply with the requirements of h(3) above. Collect the trimmed cross sections in water.

k. X-Ray Inspection. Perform all x-ray inspections according to TO 33B-1-1, Non-Destructive Inspection Methods, and AFR 160-132, Control of Radiological Health Hazards.

l. Inhibiting:

(1) Keep solvents for applying inhibitors or propellant in approved safety cans. Allow only the minimum quantity of solvent needed to operate efficiently in operating rooms. Quantities required for 4 hours continuing operation are the maximum allowed.

(2) Install exhaust systems at inhibiting operations to keep the solvent vapor concentrations in the rooms within safe limits (AFOSH Standard 161-2). If exhaust systems are connected to a main duct servicing several rooms,

install spark arrestors in the exhaust line from each room. This is not needed if the concentrations of vapor are known to be outside the flammable range at all times.

m. Wall Boxes. Use wall boxes liberally for transferring propellant sheets or grains between rooms of the same building. Construct the wall boxes of fire-resistant and nonsparking material. They will close to furnish an effective firebreak, but the boxes will be designed to vent a fire within the box. Do not vent wall boxes toward normal work positions of operators.

n. Handling and Transporting:

(1) Cover paste, sheet-propellant carpet rolls, and extruded grain during transit between operations.

(2) Stack sacks or other containers of dry paste only one high during transportation and storage.

(3) See chapter 7 for materials handling equipment operational and safety requirements. Compliance is considered especially important in connection with these explosives.

(4) During cold weather, consider transporting explosives in hot-water-jacketed containers to prevent excessive hardening or freezing of the explosives.

o. Housekeeping:

(1) Set up schedules for periodic cleaning of buildings and observe strictly. These schedules should include dismantling of equipment and cleaning with a solution that will decompose nitroglycerin.

(2) Use a 50-50 mixture by weight of the following solutions to decompose small quantities of nitroglycerin:

(a) Solution A. Nine parts sodium sulfide (pulverized) and 30 parts water, by weight.

(b) Solution B. Seventy parts denatured ethyl alcohol and 20 parts acetone, by weight.

(3) Do not combine these two solutions until immediately before destroying the nitroglycerin because the mixture potency diminishes in storage. Limit the use of this mixture to small quantities of nitroglycerin. For example, the oily film that adheres to surfaces after the nitroglycerin has been removed with sponges or absorbed in wood pulp or sawdust. Operators using this solution must wear rubber gloves and eye protection.

(4) Place wood pulp, sawdust, and other material contaminated with nitroglycerin in a special container used only for this purpose. It will be transferred to the burning ground at the close of each cleaning operation.

10-15. Military Pyrotechnics:

a. Weighing Raw Materials:

(1) When weighing explosives or highly combustible materials, use scales which are electrically grounded. The ground current-carrying capacity must not be less than a No. 8 (0.128 inch) copper wire.

(2) Two separate weight or measure rooms must be used: one for oxidizing agents and one for combustible material and metallic powders. Vessels, sieves, and other pieces of equipment used for oxidizing agents will not be used for combustible materials and metallic powders (or vice versa). This equipment should be marked to show the type of material with which they are to be used.

b. Drying of Materials:

(1) Apply heat by the indirect method whereby air is blown or drawn over radiators and circulated through the mass of materials to be dried. Do not recirculate air which has passed over the material being dried over the heating coil.

(2) Find the safe temperature for drying each material. Do not exceed this temperature at any point in the dryer apparatus or drying room.

(3) Use thermostatic control to maintain the maximum temperature in the drying apparatus or dryer room and record it at regular intervals. Install a temperature indicator-recorder to keep a continuous and permanent record. Put it where it will indicate the maximum temperature, such as the drying room or dryer apparatus.

(4) Use nonferrous metal trays for spreading material for drying and electrically ground the trays.

(5) Hold dust formation or accumulation to a minimum.

(6) To prevent overheating, use the following or a similar procedure to control the oxidation rate of linseed-oil-coated magnesium powder: spread the magnesium powder in properly grounded nonferrous metal trays to a depth of not more than 2 inches. Keep the humidity between 50 and 55 percent, and the room temperature below 85 °F. Air-conditioning equipped with a reheat system is necessary to ensure these conditions.

c. Mixing and Blending of Components:

(1) Blending should be done in a building used only for this purpose. Multiple blending of pyrotechnic mixtures or explosives may be done in the same building. However, each blender or

mixer must be located in a separate room (or cubicle) separated by a substantial dividing wall.

(a) At least one wall or equivalent panel area in more than one wall will be of weak construction. No one will be allowed to pass in front of the weak wall or panel area while the blender is in operation.

(b) All operating controls will be placed outside the cubicle and they will be protected by a substantial dividing wall located at intraline distance from the blending cubicle.

(c) Driving belts will be only allowed inside the blending rooms when steps have been taken to ground for static electricity.

(2) When blending or mixing is done in bays, such bays will be of a construction suitable for the hazards of the material being processed. The walls of each bay should extend at least 24 inches above the roof. The roof over each bay should be independently supported and of free-lift type.

(3) Strong oxidizing agents, such as peroxides, chlorates, and perchlorates, cannot be desensitized with oil or other similar fuels. When oxidizing agents are blended with fuels, use a mechanical blender operated and installed as prescribed in this paragraph.

(4) Blending or mixing machines will not be used with rotating blades in mixing hazardous materials. Mixers which use the mulling principle, such as the Simpson Intensive Mixer, are allowed. The preferred type of machine may be described as a burnishing barrel (capable of being elevated, depressed, and emptied from behind a barricade).

(5) If the blender is equipped with metal baffles, the baffles must be welded in position.

(6) Balls or similar blending aids will not be used in blenders or mixers equipped with baffles unless the balls can move freely between the base of the mixer and the baffles.

(7) Blenders will be operated by a shaft extending through the building wall and connected to a motor located outside the blending bay.

(8) The blender will be electrically grounded.

(9) Blenders will be provided with a safety seal or other suitable method of relieving any excessive gas pressures developed within.

(10) The quantities of composition per charge must not exceed the amount of explosives consistent with continuous operation. The quantities in table 10-2 should be considered allowable for blending at any one time in one room. They are based on quantities normally required for continuous safe operation.

Table 10-2. Suggested Quantities per Charge for Blenders.

Material	Quantity (Pounds)
Igniter composition for tracer	50
First-fire composition	50
Tracer composition	50
Flare, signal or incendiary composition	100
Magnesium powder coating	100
Thermite	200

d. Pressing, Loading, and Pelleting:

(1) Perform pressing operations only on approved types of presses. Protect personnel by an effective barricade or shield.

(2) Before repairing, adjusting, or clearing a jammed press, remove the explosives from the hopper and the bay or pressroom.

(3) Allow only the maximum quantity of composition behind the barricade at any one time that is required for the pressing operation. Not more than the quantity needed to meet established production schedules may be kept in the rest of the pressroom at any one time.

(4) If the composition before pressing is subject to ignition by spark, cover benches and floors with conductive nonsparking material and ground them electrically (chapter 6). In such locations, personnel will be equipped with conductive-sole shoes.

(5) Locate each press or loading machine for pressing or loading operations in a separate building, room, or cubicle. The walls should extend above the roof or be otherwise suitably barricaded to protect the operations, depending on the quantity and type of material. Building exits should be installed directly to the rear of the operator's normal working position. All motivating equipment (such as hydraulic pumps and motors) will be exterior to the pressroom. At least one wall or equivalent panel area in more than one wall of the press or loading room will be of weak construction.

(6) Each press must be electrically grounded.

e. Assembly:

(1) Perform matching and igniter assembly in a separate room or building.

(2) Separate individual assembly operations from each other to avoid congested conditions and crowding of employees.

(3) Place benches with ends toward the exits to provide ready exit in case of emergency.

(4) Ensure doors to the assembly room comply with chapter 8.

(5) Maintain a continuous flow of completed items from the assembly room to storage. Only the minimum amount of components needed to maintain the production schedule may be kept in any assembly room.

(6) Do not allow components or assembled items to accumulate in aisles or in front of exits.

f. Grinding:

(1) Grinding equipment will have all metal parts electrically bonded, and the entire group of equipment items should be electrically grounded.

(2) In operating ball or hammer mills, the operator will be protected from the effects of a fire or explosion occurring within the mill. Use intervening dividing walls or operational shields of suitable design and strength.

g. Screening:

(1) Screening is done to remove extraneous materials and to obtain uniform granulation of constituents. Screening may present a toxic, fire, or explosion hazard.

(2) All power-driven screening equipment will be equipped with dust-tight enclosures to reduce the escape of dust from such equipment. The enclosures should be designed to prevent sparks due to impact between two spark-producing materials.

(3) All screening equipment will be electrically grounded.

(4) Mechanically operated screening equipment is preferred to manually operated equipment. Where screening is done by hand, provide ventilating hoods if the dust concentration exceeds the criteria established in applicable technical orders. Build these hoods so that operators cannot breath the dust. When operators are hand screening chlorates or similar materials, they must wear gloves.

(5) After the screening operation is completed, all materials will be placed in suitable covered containers.

h. Painting and Marking. All spraying operations involving flammable liquids will be segregated and done in spray booths built according to NFC, Standard 33, Spray Application.

i. Reworking:

(1) If required to be repaired and reassembled, process defective-loaded components in a building where no other operations take place. Separate such buildings by appropriate intraline distance from other buildings of the plant.

(2) Rework defective-loaded components only under the supervision and direction of personnel fully aware of the hazards involved in assembly and disassembly operations.

(3) Do not pulverize consolidated mechanical pyromixtures for reblending operations.

(4) Do not rework consolidated pyrocomposition not complying with specifications as to candlepower and burning time.

j. Housekeeping. Cleaning will be done as local circumstances require for maintaining safe

conditions. Do not perform general cleaning while operations are in progress.

k. Maintenance and Repairs. Only qualified workers may make repairs to operating buildings, storage magazines, service magazine, or equipment. Before any repairs are started, inspect the surrounding area for pyrotechnic materials. Remove all traces of such materials.

10-16. Chlorates:

a. General Information. Chlorates mixed with sulfur, sulfides, or other readily oxidizable material may result in spontaneous ignition. Sulfur is a greater hazard than sulfides. The addition of phosphorus to a sulfur and chlorate mixture makes an even more dangerous composition.

(1) Shellac, potassium, or sodium nitrate with petroleum derivatives, and powdered metals render chlorates sensitive. Mixtures of trinitrocresol or picric acid and chlorates should be avoided since they are particularly sensitive. Chlorates should never be mixed with ammonium salts since ammonium chlorate may explode spontaneously.

(2) Any chlorate mixture that contains 0.5 percent or more of moisture is hazardous because it may form chloric acid.

(3) In any of the mixtures described above, the substitution of sodium chlorate for potassium chlorate increases the hazard.

b. Ammonium Chlorate. Ammonium chlorate decomposes spontaneously and, when mixed with perchlorates, constitutes a major hazard.

c. Barium Chlorate. Barium chlorate is very toxic on contact with the skin, when inhaled as a dust, and when ingested. Barium chlorate is more dangerous than potassium chlorate for storage.

d. Zinc Chlorate. Zinc chlorate when in contact with certain organic materials will explode under slight friction, percussion, or shock.

e. Containers. Containers for shipping and packing chlorates will be nonabsorbent and noncombustible.

f. Storage. Chlorates should be stored so they do not touch any other combustible (organic or inorganic) material. Broken or damaged containers should be removed and spilled material swept up promptly.

g. Fires Involving Chlorates. Fires involving chlorates should be fought with solid streams of water or with water fog, depending on the circumstances.

(1) The use of solid streams enables fighting the fire from a greater distance but introduces the possibility of steam explosion.

(2) Water fog offers the advantage of quicker cooling. However, its normal smothering action is useless since the chlorates furnish oxygen to the fire.

WARNING: Latent fire hazards may be generated in any material (shoes, clothing, etc.) that becomes saturated with chlorate-laden water from firefighting. Contaminated clothing and other materials must be removed promptly and decontaminated or disposed of. When they dry out, these materials are easily ignited and are serious fire hazards.

10-17. Perchlorates:

a. General Information. Perchlorates form slightly less sensitive mixtures than do chlorates and, when possible, should be substituted for them. Perchlorates are less sensitive to impact and friction and do not form a free acid when moisture is present. They are less hazardous if they come in accidental contact with weak acids.

b. Ammonium Perchlorate. Ammonium perchlorate alone is an explosive but is exploded with difficulty. It is stable at ordinary temperatures but decomposes at a maintained temperature of 302°F (150°C). It has the same degree of sensitivity to impact as picric acid. It becomes a high explosive when mixed with flammable materials and metal powders.

c. Containers. Containers for perchlorates in storage include wooden boxes, kegs, barrels, and sometimes iron drums. All damaged and broken containers should be removed from the storehouse and spilled material swept up promptly and destroyed.

d. Fires Involving Perchlorates. Fire involving perchlorates alone may be fought with water.

10-18. Peroxides:

a. General Information. Solid peroxides should be stored in a cool, dry place because they decompose easily in the presence of moisture and liberate oxygen. Consequently, they are a dangerous fire hazard, particularly when mixed with combustible materials. Sodium peroxide should be protected from contact with water since it then becomes explosive. Hydrogen peroxide of about 30 percent strength is unstable, liberates oxygen, and exhibits much the same characteristics as the solid peroxides.

b. High Strength Hydrogen Peroxide. (See AFM 161-30, volume II.)

(1) High strength hydrogen peroxide (90 percent or greater) is shipped in specially designed containers which are vented. It should be stored only in containers which are vented to the atmosphere and the vent constructed so that foreign material will not enter containers. It must be stored in a cool, shaded location used exclusively for that purpose.

(a) Control the temperature of containers of hydrogen peroxide. Hydrogen peroxide decomposition is a function of temperature.

(b) Instruct operators to report any undue heating of hydrogen peroxide drums to the person in charge and evacuate the area immediately. Install a water-spray system for cooling in hydrogen peroxide storage locations. It will be turned on immediately when any undue heating of the storage drums is observed.

(c) If hydrogen peroxide is to be stored for long periods, use high purity aluminum containers.

(2) All tanks, tubes, and fittings must be cleaned thoroughly. The following is a recommended cleaning procedure:

(a) Place parts in a pickling solution of 0.5 percent sodium hydroxide for 1 hour at room temperature.

(b) Wash with clean water, dry, and place in a 35-percent solution of chemically pured (CP) sulfuric acid for 1 hour at room temperature.

(c) Wash, dry, and place in a 25- to 30-percent solution of hydrogen peroxide for at least 24 hours, then drain off and discard the solution. The part is then ready for use.

(3) When hydrogen peroxide touches the skin, it causes a burn and discoloration. Running water should be available in the storage area. Any part of the skin that has contact with hydrogen peroxide should be washed immediately with water. A 3-percent boric acid solution should be available for irrigation of the eye in case of accidental splashing. Spills of hydrogen peroxide must be immediately washed away with water. All persons handling this material will wear face shields, rubber gloves, and rubber trousers on the outside of rubber boots.

(4) Only the following materials should be used in equipment contacting high strength hydrogen peroxide: "Pyrex" glass, high purity aluminum, pure tin, "Koroseal," or equal. Stainless steel types 304, 309, 310, 316, 321, and 347 are suitable for periods of 2 months or less.

c. Fires Involving Peroxides. Fire involving peroxides, except sodium peroxide, may be fought with water. Sodium peroxide fires should be smothered with sand, ashes, dirt, or rock dust.

10-19. Nitrates:

a. General Information. Nitrates not flammable in themselves are usually stored in wooden boxes, kegs, or barrels. Ammonium nitrate, however, is usually shipped in special waterproofed bags or metal containers. Barium nitrate is sometimes stored in iron drums. Regardless of the type of container, it should be moisture-proof. Nitrates should be stored in a dry place since they cake in the presence of moisture.

b. Ammonium Nitrate:

(1) When confined, ammonium nitrate may detonate with the violence of a high explosive, but a relatively heavy initiator is ordinarily required. Under the effect of heating alone, ammonium nitrate will decompose. Contamination with chlorides, sulfur, nitro-bodies, charcoal, metallic nitrates, metal powders, petroleum derivatives, and oxidizable carbonaceous materials sensitizes ammonium nitrate. It also accelerates decomposition and increases the violence of the reactions.

(a) Zinc or lead contamination lowers the decomposition temperature to 200°F (93.3°C). Do not use any galvanized metals or lead solder near an ammonium nitrate operation.

(b) The burning of ammonium nitrate and combustible materials, such as wood or paper containers, may produce a mixture of gases. This gas mixture may, under pressure, explode with enough force to detonate the ammonium nitrate. Fires involving ammonium nitrate will be vented to the greatest practical extent. Air acts as a diluent for the hazardous gases and reduces the risk of an explosion.

(2) In high pan (evaporating) operations, deluge systems will be provided over the pans for use in case of fire. Temperatures used to heat ammonium nitrate will not exceed 317°F (158°C). High pan operations will be located at class/division 1.1 distances (K18) from adjacent structures other than the graining building. The graining building, however, will be protected from the high pans by an approved barricade. The K18 distances may be based on the maximum quantity of ammonium nitrate contained in any one high pan.

(3) Fires involving nitrate should be fought with large quantities of water but never with steam. The fire can be fought from a greater distance with solid hose streams. However, if the nitrate is molten, there is a hazard of steam explosion. Therefore, the hose streams should be directed from behind a protective barrier. If the fire is in the incipient stage and accessible, water fog may be used to advantage in some cases. Fog has no smothering action since the burning material provides its own oxygen.

(4) Storage of ammonium nitrate in explosives storage magazines is preferred. When stored in an area where explosives may be projected into the nitrates, comply with requirements for class/division 1.1. When stored in an area with fire hazards only, ammonium nitrate may be stored as a class/division 1.3 solid propellant. In this case, it must be separated by inhabited building distance from areas containing ammunition.

(a) Ammonium nitrate should be stored in buildings easily vented in case of fire so that the gases produced during combustion are dissipated. This does not apply to earth-covered magazines. The floors of such buildings should be of a type that prevents hazardous impregnation by the nitrate.

(b) Stacking within storage buildings, other than in earthcovered magazines, should be limited to stacks not larger than 12 feet by 12 feet and not higher than 7 feet. Aisles at least 3 feet wide should be maintained around each stack and between the stack and the sides of the buildings. The use of wood dunnage should be held to a minimum.

(c) Broken packages or containers will be removed from the building and the spilled material swept up promptly and destroyed.

10-20. Powdered Metals – Aluminum, Magnesium, and Aluminum Magnesium Alloys:

a. General Information. When compounded with oxidizing agents, powdered metals present a dangerous fire and explosion hazard.

b. Ventilation. When metal powders come in contact with water, their temperature rises, and they may ignite. Therefore, all practicable precautions should be taken to prevent any water from touching the material. All buildings where powdered metals are stored or processed will be adequately vented at the highest point of the room or building (AFOSH Standard 161-2). This is so that hydrogen gas, which forms when powdered metals react with moisture, cannot accumulate.

c. Temperature and Humidity Control. Exposed material at a low temperature should be brought to, or near, room temperature with low relative humidity before being placed in the operating room. Approved heating facilities should be installed in service magazines to bring the closed containers and contents to a temperature near that of operating buildings. The relative humidity should be between 50 and 55 percent in any location where metal powders are exposed. This is to avoid the hazard of static electricity and prevent condensation. Humidity can best be controlled through use of air conditioning equipped with a reheat system.

d. Storage. Powdered metals in metal containers with tight covers may be stored in a general warehouse if they are remote from oxidizing agents. The storage place should be dry. Locate pipes where condensation on them cannot drip on hazardous material and where any leaking pipes cannot cause ignition.

e. Handling. Operators should wear sweat bands on their foreheads and take other precautions to avoid perspiration falling on powdered metals.

f. Static Electricity. Very fine suspended dust from powdered metals is an explosive hazard comparable to that of explosive gases. It may be easily initiated by static electricity.

g. Fires Involving Powdered Metals. If powdered metals are exposed to air, they are dangerous fire hazards because they burn with intense heat. When in drums, the fire will probably confine itself to the place of origin if not disturbed. In this case, it will be effectively blanketed by the metallic oxide formed by the burning.

(1) Do not fight these fires with streams of water because they may release large quantities of hydrogen gas which can be a severe explosive hazard.

(2) Fires involving small quantities of powdered metals may be successfully fought with a fog nozzle. Specially designed commercial extinguishing powders may also be applied gently, so the fire does not spread.

(3) If large quantities of powdered metals are involved in a fire outside their storage containers, firefighting should be primarily to prevent spread to other facilities. In locations where friction sensitivity is not another risk, fires may be smothered with sand.

h. Personal Protective Equipment. Provide proper personal protective equipment for personnel handling powdered metals.

i. Repairs to Buildings and Equipment. Only competent personnel should be allowed to repair or maintain buildings or equipment where metallic powders are involved. The following precautions must be taken: remove powder or dust; use nonsparking tools; avoid hammer impacts that may cause sparks; use flashlights of an approved type; make sure the equipment is grounded; prevent undue friction; and do not use open flames. (See the NFC, Standard 63, Industrial Plants, Dust Explosion.)

10-21. Charcoal. Charcoal may ignite spontaneously in the presence of moisture. Pit charcoal is less likely to react than its chemical byproduct charcoal. Soft wood charcoal is less likely to ignite than hardwood charcoal.

a. Forced cooling after burning, drying after absorbing moisture, contact with alcohols and oils, and particularly a charcoal fire that has been extinguished promote spontaneous ignition of charcoal. Pulverized charcoal is also a fire hazard.

b. The gases from burning charcoal contain carbon monoxide and are toxic.

c. Permanent or reserve storage of large quantities of charcoal is not recommended. Bulk storage of charcoal is prohibited. It should be stored in air-tight containers or in bags piled in tiers, with skeleton or gridwork floors between the tiers to provide ventilation. It should be isolated from oxidizing agents.

10-22. Sulfur. Sulfur compounded with chlorates and several other oxidizing agents forms highly sensitive explosive mixtures.

a. When sulfur is mixed with carbon, lamp black, fats, and oils, it may ignite spontaneously. Burning sulfur produces toxic vapors.

b. Sulfur may be stored in wooden boxes, kegs, or barrels. Large quantities may be stored in bulk. It should be isolated and remote from oxidizing agents with which it forms highly sensitive explosive mixtures.

10-23. Volatile Flammable Liquids. Examples of common volatile flammable liquids are ether, acetone, gasoline, ethyl alcohol, methyl alcohol (wood alcohol), benzene, toluene, xylene, and amyl acetate.

a. These liquids are volatile. If unconfined at room temperature, they may evolve vapor in concentrations in air within the explosive range.

b. Volatile flammable liquids must not be used to wash or clean equipment or parts of buildings, except where specifically authorized as a process requirement.

c. Some flammable liquids (such as linseed oil, paints, varnishes, and enamels) may ignite spontaneously under certain conditions. They must be kept where any heat produced will readily dissipate. They must also be kept away from any outside source of heat.

d. Only noncombustible sweeping compounds must be used in cleaning up materials of this type.

10-24. Calcium Carbide. Small quantities of calcium carbide may be stored in airtight tin cans or iron drums in a general warehouse. Large quantities must be stored in a separate building of noncombustible construction or a detached weatherproof shed. The storage place should be dry and well ventilated. Special precautions should be taken against moisture. Calcium carbide is a slight fire hazard. However, it reacts violently with water to liberate large quantities of acetylene gas, which forms explosive mixtures with air.

10-25. Nitrocellulose and Derivatives. Nitrocellulose includes various types of nitrated cotton or wood pulp, depending on the nitrogen content.

a. Dry nitrocellulose is extremely sensitive to shock and friction and readily accumulates static charges. It is highly flammable and explosive, burns rapidly, produces little smoke, and leaves no residue. If it is impure, it may ignite spontaneously.

b. Dry nitrocellulose must not be stored because it has all the hazards of a sensitive and easily ignited high explosive.

c. Nitrocellulose containing 25 to 30 percent moisture is stored in zinc-lined boxes or metal drums. If it is stored in an area into which ammunition or explosives cannot be projected, it is substantially nonexplosive.

Section B—Research, Development, and Testing Operations

10-26. General Information. Facilities used for research, development, and testing require special guidance and restrictions. They also need relief from certain rules prescribed

here to maintain a safe and efficient operations capability.

10-27. Blast and Fragment Confinement Facilities. Make a detailed review of each operation. Make sure that the explosives limits are within the capability of the laboratory or test areas as prescribed in this regulation and AFM 88-22. Facilities can be designed to totally confine blast and fragment hazards and eliminate the need for public traffic route and inhabited building distances. As the capability to confine fragment and blast is reduced, explosives limits and safe separation must be adjusted accordingly.

10-28. Structure Reinspection. If there is a detonation in one of the total confinement facilities described in paragraph 10-4 or 10-27, the facility must be inspected by a qualified engineer. The inspector must make sure that structural integrity is maintained or must reduce explosives limits so that any later blast will not exceed the retention capability of the structure.

10-29. Program and Facility Review. Each proposed program for the laboratory or test facility will be reviewed by the operational supervisor, the explosives safety officer, and the system safety office to determine all foreseeable hazards involved. This review must include:

a. Structural limitations of the facility.

b. Remote control viewing and operating equipment, if required.

c. Special safety precautions for other personnel in the building.

d. Safe separation distances.

e. Deviations required from other parts of this regulation.

f. Written instructions needed to ensure safe operations, such as:

(1) Protective clothing required.

(2) Warning signals during operations.

(3) Fire and other emergency procedures.

(4) Special testing of the operating equipment needed before operations (such as stray voltage and calibration checks).

(5) Removal of all explosives not needed for the operation.

(6) Arrangements for overnight storage of explosives used in the test.

(7) Inspection and cleanup procedures following a test or after a detonation of the test item.

10-30. Operational Approval. The laboratory commander must approve the results of the operational safety review. This must include hazard corrections and written procedures before the explosives safety officer issues a license for the operational facility. The MAJCOM determines the approval level for written procedures.

10-31. Operational Limitations. The quantity of explosives used in any laboratory operation will be the minimum needed to get the required results. Also, small quantities will be reduced further when new or relatively unknown explosives are being tested to find their hazard characteristics.

10-32. Incremental Safe Separation Distances. Where laboratory and test facilities cannot be properly shielded to prevent the release of fragments and blast, the following applies:

a. Where facilities and roadways warrant the protection equal to that required for the general public, the minimum safe separation distance will be 1250 feet, from housing areas, schools, and on base public roads.

b. Incremental inhabited building distance of table 5-1 will apply to operations, facilities, and personnel organic to the using organization where lesser distances do not apply under this regulation.

10-33. Storage Compatibility Exceptions for Laboratory and Field Test. If the proposed storage facilities will confine the blast and fragments, or the incremental inhabited building distances are as indicated in paragraph 10-32, the following applies:

a. Up to a total of 15 pounds of explosives may be stored without consideration of storage compatibility. However, the operation must be reviewed and approved as stated in paragraph 10-29.

b. The MAJCOM may authorize the storage of up to a total of 1,000 pounds of incompatible storage.

c. For quantities over 1000 pounds of incompatible storage, a request must be submitted for deviation to HQ AFISC/SEWV, Norton AFB CA 92409-7001.

Chapter 11
WAIVERS, EXEMPTIONS, AND DEVIATIONS

11-1. General Information. This chapter tells how to request authorized departures from the mandatory requirements of this regulation.

11-2. Waivers, Exemptions, and Deviations. Requests for waivers, exemptions, and deviations are proper when it is determined, for strategic or compelling reasons, to be impractical to comply with mandatory requirements. This determination must be based on complete analysis of the mission, explosives requirements, and facilities. Ease of operation must not be the reason for requesting a waiver, exemption, or deviation.

a. The waivers and exemptions described below apply to existing facilities. Situations involving new construction which does not meet quantity-distance (Q-D) criteria require Secretary of the Air Force exemption as specified in paragraph 8-2. A Secretarial exemption is also required when facilities are sited for a net explosives weight (NEW) that is insufficient to provide for assigned operational mission. (Example: A hardened aircraft shelter (HAS) is sited for 110 pounds NEW to obtain a zero Q-D clear zone, when the assigned mission requires the use of general purpose bombs.)

b. Pending receipt of the decision, operations may continue based on the proposed waiver, exemption, or deviation request and locally established controls. In the interim, all reasonable and feasible control actions and procedures will be taken to reduce the possibility of a mishap.

c. Requests for waivers, exemptions, and deviations should be supported by a description of the means to correct the violation. This may include rewarehousing, reducing the amount of explosives, reorientation of operations or a construction project, etc.

d. Waivers apply to relatively short-term violations of the Q-D requirements of this regulation. Five years or less is considered a short-term violation.

e. An exemption is a form of waiver that is proper if the situation meets all of these conditions:

(1) It is known that a relatively long-term (greater than 5 years) or permanent departure from the Q-D standards specified by this regulation will be required.

(2) An immediate fix is impractical. For example, where Congress has not yet authorized the funds to purchase real estate for needed clearances, or where the overall US defense posture would otherwise be significantly impaired.

(3) A positive long-term program is under way for the eventual correction of the deficiency, or correction of the deficiency has been determined to be impossible or impractical (for example, large dollar cost to correct a deficiency with little reduction in risk).

f. Deviations apply to any other departure from the mandatory requirements (that is, other than Q-D requirements) of this regulation.

g. In certain unexpected situations when time is not available to comply with formal waiver or deviation submission procedures, a short-notice event waiver (deviation) may be issued if the MAJCOM has adopted the following procedures in a command publication:

(1) The commander need not forward an approved (signed) request for a waiver or deviation when corrective actions will eliminate all deficiencies within 30 days. However, the commander must forward the formal waiver or deviation request as soon as it is determined that the one or more violations cannot be corrected within the 30-day period. This 30-day exception period will not be extended, repeated, or reestablished in any way that circumvents the basic intent of this regulation.

(2) The responsible commander may authorize a temporary waiver to shelter explosives laden carriers or store their cargo and associated convoy defense weapons and ammunition when essential to cover emergency situations (for example; explosives shipments passing through your locale). The waiver is not to exceed the duration of the emergency.

(3) An emergency explosives waiver does not apply for munitions which are specified in a plan to be delivered in the event of increased hostilities or wartime (i.e., predirect munitions). These situations should be anticipated and plans made for their storage upon arrival. Normal waiver or exemption procedures apply and they should be developed in advance.

h. Waivers and deviations need not be submitted when interim actions can be taken (i.e., temporarily reducing the authorized NEW of a potential explosion site (PES)) that will elimi-

nate all violations, pending completion of corrective actions.

11-3. Time Limits:

a. Approved waivers will be for the minimum time needed but for not more than 5 years. Waivers needed beyond this 5-year time limit must be reissued as exemptions and will require signature of the next higher approval authority if the original approval authority was not the highest authority specified in table 11-1. For example, if a waiver was approved by MAJCOM vice commander, then an exemption must be approved by MAJCOM commander or higher; however, if the MAJCOM commander has exemption approval authority per table 11-1, then a waiver previously approved by the MAJCOM commander may be reissued as an exemption and approved by the same MAJCOM commander.

b. Approved exemptions or deviations will be for the time limit set by the approving authority. Permanent exemptions or deviations are permitted under certain exceptional circumstances.

c. Waivers or exemptions approved for the storage of predirect munitions must additionally be reviewed when the War Consumables Distribution Objective (WCDO) or unit mission changes.

11-4. Reviews and Renewals:

a. A review consists of a revalidation of data on the AF Form 943 or the request letter, any attached maps or drawings, and the exposed site listing as well as an evaluation of the need for the waiver, exemption, or deviation. The review date is established based on the date of the approval authority's signature. Process reviews using the instructions in paragraph 11-8d.

(1) Approved waivers will be reviewed at least every 2 years for relevancy.

(2) Approved exemptions and deviations will be reviewed at least every 5 years for relevancy.

b. A waiver, exemption, or deviation may be renewed after a review has been accomplished and if the conditions which warranted the original approval still exist. Requests for renewals must be sent to the original approving authority at least 45 days before the approved expiration date. A waiver can not be renewed beyond its maximum 5-year time limit (paragraph 11-3a). Renewals will be processed using the instructions in paragraph 11-8c.

11-5. Cancellation of a Waiver, Deviation, or Exemption. When a waiver, deviation, or exemption has been eliminated, the approving authority will be notified through channels.

11-6. Approval Authority:

a. Waivers and Exemptions:

(1) Table 11-1 gives the level of command authorized to approve waivers and exemptions under various conditions.

(2) For each MAJCOM that deploys units to Federal Aviation Administration (FAA), ANG, and civilian-controlled airfields and airports, the applicable authority from table 11-1 will approve waiver requests from these units.

(a) Where units of more than one MAJCOM are scheduled to use the same deployment base, coordinated planning is required. Host-tenant procedures will be followed when such relationships have been established.

(b) Conditions waived, or proposed to be waived, will be discussed with commanders of installations and managers of FAA and civilian airfields or airports to ensure they are fully aware of the potential hazards that exist. Needed departures from Q-D criteria should be fully explained to aid these officials in taking proper action.

(3) Exemptions may also be granted by law or congressional resolution.

b. Deviations. The MAJCOM commander is the approval authority for all deviations. This authority may be delegated to the vice commander, deputy commander, or chief of staff.

c. Requests Involving Special Weapons. See TO 11N-20-7 for information on processing these waivers, exemptions, and deviations.

Table 11-1. Quantity-Distance Exception Approval Authorities[1].

EXPOSED SITE	GEOGRAPHICAL LOCATION OF PES	HOST NATION HOLD HARMLESS	HOST NATION COORDINATION (1)	ACTUAL SEPARATION	EXPOSURE	WAIVER APPROVAL AUTHORITY (2)	EXEMPTION APPROVAL AUTHORITY (3) (2)
ON BASE (7)	–	–	–	75 - 100% of required	All	MAJCOM Cmdr (4) (5) (6)	MAJCOM Cmdr (4) (5) (6)
				Less than 75% of required	All	MAJCOM Cmdr (4) (5) (6)	MAJCOM Cmdr (4) (5)
OFF BASE (12)	USA & Territories	–	–	75 - 100% of required	All	MAJCOM Cmdr (9)	Sec'y/Under-Sec'y of the USAF (10)
				Less than 75% of required	All	Sec'y/Under-Sec'y of the USAF (10)	Sec'y/Under-Sec'y of the USAF (10)
	Non - US Locations	Yes (11)	–	Less than 100% of required	All	MAJCOM Cmdr (9)	MAJCOM Cmdr (9)
		No	HOST NATION COORDINATES/ APPROVES	75 - 100% of required	Not over 100 people and not over $10 million property	MAJCOM Cmdr (9)	MAJCOM Cmdr (9)
					Over 100 people or over $10 million property	MAJCOM Cmdr (9)	Sec'y/Under Sec'y of USAF
				Less than 75% of required	Not over 100 people and not over $10 million property	MAJCOM Cmdr (9)	Sec'y/Under Sec'y of USAF
					Over 100 people or over $10 million property	Sec'y/Under Sec'y of USAF	Sec'y/Under Sec'y of USAF
			HOST NATION DISAPPROVES	Less than 100% of required	All	Waivers NOT Authorized	Exemptions NOT Authorized

NOTES:

1. Where international treaties or status of forces agreements require it, host nation approval must be obtained.

2. The MAJCOM safety staff must coordinate requests with the applicable staff agencies to ensure strategic or other compelling reasons exist which necessitate the exception.

3. For exemption involving new construction, see paragraph 8-2a.

4. Where non-US Air Force personnel (other than military, civilian employees and contractors, and dependents) or property are being hazarded on base, the responsible official of equivalent level to the US Air Force approval authority must review and approve the exception.

5. The MAJCOM commander may delegate approval authority to the vice or deputy commander, chief of staff, or MAJCOM director of safety.

6. Where exposures include military family housing or nonmission-related structures of public assembly, such as commissaries, main exchanges, schools, nurseries, hospitals, churches, theaters, bowling alleys gymnasiums, etc., the approval authority may not be delegated below MAJCOM vice or deputy commander.

7. Joint use runways and taxiways are considered the same as off-base exposures.

Table 11-1. Continued.

8. The MAJCOM commander may delegate approval authority to the vice or deputy commander or chief of staff.

9. The vice or deputy commander may be delegated approval authority.

10. This situation presents a level of additional risk to civilians which is normally unacceptable. HQ AFISC/SEWV will not recommend approval of this type exception unless justification shows that disapproval will seriously jeopardize national security and no other means of resolution is possible.

11. Hold harmless agreements must be reviewed by HQ USAF/JA and HQ AFISC/SEWV.

12. See paragraph 11-11 for an exception for uninhabited off-base areas.

11-7. Preparing Waiver, Exemption, and Deviation Requests:

a. General Information. Waiver and exemption requests are submitted on AF Form 943. The AF Form 943 is prepared using the instructions in attachment 6. A drawing, prepared as outlined in paragraph 11-12, is also required with each request. Additional letters, attachments, maps, or plans, may be required as stated in the following paragraphs. Deviations will be submitted to the MAJCOM safety office for processing.

b. Potential Explosion Site. Normally, only one request for a single potential explosion site is included on each AF Form 943. Different types of requests (waiver or exemption) on the same PES will be submitted on separate AF Forms 943. When several similar PESs have identical exposed sites, they may all be shown on the same AF Form 943. The PESs and the number of violations caused by each PES must be clearly shown on the form. Such multiple PESs may be shown on the same map or drawing.

c. Waivers and Exemptions. Enough copies of the request must be prepared to provide one for each reviewing and approving organization and HQ AFISC/SEWV. Each copy will include an AF Form 943 and drawings (layout maps or site plans) portraying the waiver PES, all exposed sites (ES) being waived and other facilities or operations to be considered. For requests requiring Secretary of the Air Force approval, forward two additional copies.

(1) Prepare and submit the request as soon as possible. Delays in processing can be detrimental to construction schedules and escalate project costs.

(2) Provide all information pertinent to the request. Unique operational provisions and procedures can bear on the decision. Include factors which minimize the number of people or amount of time they are exposed to a potential hazard.

(3) Request an exemption only after all feasible alternatives have been evaluated. These alternatives should be discussed in the request package. Provide a site plan showing the sites considered and state why they were unacceptable. This will help the reviewing agencies to judge if the proposed site is the only practical alternative.

(4) See attachment 7 for a sample request for a secretarial exemption.

d. Deviations. Deviation requests should be sent as a letter, to the MAJCOM for their approval. Requests must explain the current requirement, reference to the required procedures in this regulation, and desired deviation to these procedures. Include any maps or drawings needed to clearly show conditions involved.

11-8. Processing Waiver, Exemption, and Deviation Requests:

a. Waiver, exemption, and deviation requests must be signed by the responsible commander (plant manager for contractor's facilities) and sent through channels to the MAJCOM that has jurisdiction over the installation (or industrial contract). ANG and AFRES units will send their waiver, exemption, and deviation requests through channels to NGB or HQ AFRES. The MAJCOM will send one copy of approved waiver, deviation, and exemption requests, together with accompanying maps (or plans) to HQ AFISC/SEWV, Norton AFB CA 92409-7001. The MAJCOM will review all waiver and exemption requests requiring Secretary of the Air Force approval, indorse these requests as shown in attachment 7, and send the requests to HQ AFISC/SEWV if the problem

cannot be solved. HQ AFISC/SEWV will process requests requiring action by the Secretary of the Air Force.

b. If a request involves a tenant unit, the host commander is responsible for submitting the waiver, exemption, or deviation request.

(1) Tenants should apply to the host commander for a waiver, exemption, or deviation needed by their operations.

(2) Tenants will send an information copy through channels to their parent command.

(3) The host base MAJCOM staff will coordinate requests from tenant units, or where tenant units are hazarded, with the tenant's MAJCOM before approving or forwarding the request. Every effort will be made by the MAJCOMs concerned to resolve or reach agreement concerning waivers or deviations involving tenant units. If the MAJCOMs disagree, the MAJCOM of the host base will refer the matter to HQ AFISC/SEWV for resolution. Send requests in three copies, complete with maps or plans, and all correspondence on the matter between MAJCOMs.

c. Renewals require the same processing as initial requests. It is not necessary to resubmit the complete details of the waiver or deviation. However, the request must show the waiver or deviation identification number, a summary of the violations involved, and any changes in data concerning the PES, ESs, or status of programmed corrective action.

d. Reviews require the same processing as initial requests, except the approval authority need not sign them. (The review may be completed by the safety staff.) The unit must submit updated information as in c above. Each review level must assess continued strategic necessity and any increase or decrease in the level of risk originally assumed to decide if the original level of approval authority is still adequate. If not, a new exception may be necessary.

e. The MAJCOM weapons safety office and the host base weapons safety office will maintain copies of current waivers, exemptions, and deviations.

11-9. Waivers and Exemptions on Overseas Storage of US Title Ammunition and Explosives. Where overseas storage of US Title munitions hazards host nation personnel or property, including the base boundary or restrictive easement, a waiver or exemption request must be prepared except as outlined in paragraph 5-3a. Where host nation approval is required, route the waiver or exemption request through the responsible host nation official for concurrence. (Use an applicable or unused block on AF Form 943, section IV.) These routing procedures do not apply where the host nation has granted approval authority for host nation exposures to the US Air Force MAJCOM commander.

11-10. Waivers on US Air Force Exposure to Potential Explosion Sites of Foreign Governments. When an Air Force unit is a tenant on the base of a foreign government, and a host explosives location results in an exposure of US Air Force personnel, materiel, or facilities, use the following procedures:

a. Determine the class/division of explosives (from the US Air Force viewpoint) and the upper net explosives weight limit assigned to the location by the proper authority or representative of the foreign government.

(1) If a maximum weight limit has not been assigned, take immediate action to arrange for the most favorable conditions possible and the assignment of an explosives limit. Use the proper channel for such negotiations (base commander or other proper authority).

(2) If negotiations are expected to be prolonged, use the best available estimate of the upper weight limit of the foreign explosives location.

b. Apply Q-D criteria between intergovernment (US Air Force/foreign) explosives or tactical facilities as set forth in paragraph 5-20.

c. If US Air Force explosives are located adjacent to explosives of a foreign government, keep the prescribed intermagazine Q-D criteria as a minimum, or base all Q-D calculations on the combined quantity of explosives involved.

d. To send a waiver request for US Air Force exposures to these foreign-owned explosives, use the same procedure as for a normal US Air Force waiver. This procedure will determine extent and acceptability of added risk to US Air Force exposures caused by explosives of the foreign government.

11-11. Restrictive Easements or Agreements. Though not improved with permanent, enclosed structures, land beyond the boundary or easement may at times receive intensive public use, such as an outdoor recreational facility. For this reason, the base boundary or the restrictive easement boundary

will be the limiting exposure except as authorized below:

a. A restrictive easement or agreement should be obtained when the inhabited building (IB) distance extends beyond the base boundary. A new restrictive easement should be obtained when the IB distance extends beyond the boundary of an existing restrictive easement.

b. A restrictive easement is not required:

(1) If the terrain adjacent to the base (or an existing easement) boundary is open and unsuitable for habitation.

(2) In foreign countries for open land outside the base boundary which is within the host nation maintained clear zone.

c. If the IB distance extends beyond the base or restrictive easement boundary and the terrain adjacent to the boundary is open and uninhabited, the MAJCOM director of safety may approve a waiver or exemption. The approval must be predicated on a quarterly review of the waived area to ensure it remains open and uninhabited. All other IB distance violations to the base or restrictive easement boundary require waivers or exemptions approved by the authority specified in table 11-1.

11-12. Preparing Drawings. Each drawing attached to a request must clearly identify the ES and all PESs having clear zones that include the waived or exempted facility even if distances meet required separations. Drawings will have a scale of 1 inch equals 400 feet, or the metric equivalent. Tabs C, D, or M of the civil engineering base comprehensive plan may be used. Show the following information on the drawing. (When required information is shown on the AF Form 943, it need not be repeated on the drawing.)

a. Identify the PES by circling it and marking it with the last two parts of the action number, on AF Form 943, section I. (Examples: 77-W1, 81-D2.)

b. Show the clear zone boundary surrounding the PES, based on the explosives weight shown on AF Form 943, column 4.

c. Identify each ES shown on AF Form 943 by circling it and marking it with the Facility Number (AF Form 943, column 7).

d. Identify all ESs not shown on AF Form 943 which are inside the clear zone. Provide the same information as required by AF Form 943, columns 7 through 12. If this information cannot be easily shown on the drawing, a listing of these ESs may be attached to the request package. Example of ESs which will be included are:

(1) Other explosives locations.

(2) Related facilities (paragraph 5-14).

(3) Inhabited buildings, both on base and off base.

(4) Base boundary.

(5) Restrictive easements.

(6) Public traffic routes.

(7) Runways and taxiways.

(8) Aircraft parking locations.

(9) Petroleum, oil, lubricant facilities (including pipelines).

(10) Utilities and communications lines.

e. Show the scale of the drawing. Where distances between facilities cannot be easily or accurately measured, show the distances between the PES and those facilities listed in d above, either on the drawing or on the attached listing.

f. Color code drawings to improve readability. Use red to identify the PES and clear zone boundary. Use green to identify ESs.

Chapter 12

APPLYING QUANTITY-DISTANCE PRINCIPLES TO SPECIFIC WEAPONS SYSTEMS AND SPECIAL STORAGE CONFIGURATIONS

12-1. General Information. This chapter expands the general quantity-distance (Q-D) principles discussed in chapter 5 and applies those principles to specific situations where testing has been conducted. These tests provided information to establish specific separation distances. This chapter is divided into two sections. Section A gives criteria for weapons systems that have been tested, or where an analysis has been performed, to verify special Q-D criteria. Section B provides criteria for special storage configurations that will limit the maximum credible event (MCE) in the event of an accident.

a. In many cases the use of these criteria requires that certain configurations or situations exist before the reduction can be applied. If these requirements are not adhered to, calculate the total net explosives weight (NEW) of explosives present, and use the criteria in chapter 5 to determine Q-D separations.

b. When reductions to separation distances or increased quantities of explosives are authorized to support emergency or wartime operations, preplanning should be accomplished to determine the risks associated with these reduced criteria.

Section A—Criteria for Specific Weapon Systems

12-2. Strategic Missiles. Criteria in chapter 5 apply for strategic missiles except for the Minuteman and Peacekeeper missile criteria specified below.

12-3. LGM-30 (Minuteman) Separations. Explosives safety standards and Q-D criteria apply to explosives in the LGM-30 except as outlined in this paragraph. These safety distances are based on 7400 pounds (class/division 1.1) high explosives equivalency for LGM-30 missiles, through the F model, with or without a warhead installed. The LGM-30G motor does not have a high explosives equivalency for shipping and storage purposes. Therefore, use class/division 1.3 Q-D criteria in these modes. When the warhead is added to the LGM-30G, the 7400-pound high explosives equivalency will apply.

a. Launch Facilities (LF). Explosives safety distances are measured from the center of the silo.

(1) Fifteen hundred seventy feet from schools, churches, hospitals, and other buildings of public assembly.

(2) Twelve hundred feet from all other inhabited buildings.

(3) Seven hundred twenty feet from public traffic routes (PTR).

b. Aircraft Loading and Unloading Sites for Solid Propellant Motors in the Shipping and Storage Containers, Ballistic Missile (SSCBM), and Payload Transporter Container:

(1) These sites must be located:

(a) Twelve hundred feet from inhabited buildings.

(b) Twelve hundred feet from facilities, aircraft, or other equipment essential to the mission of the base.

(c) Seven hundred twenty feet from PTRs.

(2) When an aircraft loaded with these motors must be refueled, a fully staffed firefighting truck will be on standby at the aircraft during the fueling operation.

c. Railroad Loading and Unloading Sites. The criteria in paragraph 7-22t apply to railroad loading and unloading sites for the roll-on and roll-off of Minuteman missile motors in the SSCBM and missile transporters shipped by the "piggyback" method. This operation is considered a "change-of-mode-of-transportation" requiring use of good judgment and proper control to make sure exposures are reduced to a minimum. Clear zones should be maintained around these sites, as outlined in paragraph 8-10, to prevent encroachment.

d. Missile Holding Pads. Such pads will be no less than 1200 feet from inhabited buildings.

e. Launch Control Facility (LCF). Explosives-loaded vehicles (payload transporter, reentry vehicle guidance and control van, transporter erector) may be temporarily parked at the LCF, subject to the following controls:

(1) Make sure competent authority has approved a waiver (chapter 11) for temporary parking for the vehicle at the facility. Parking may be allowed if needed for severe weather, equipment breakdown and repair, crew rest,

darkness (where state law prohibits vehicle travel on highways after dark), or other emergency conditions.

(2) Do not allow smoking outside launch facility support buildings.

(3) Park only one explosives-loaded vehicle at the facility at any one time.

(4) Publish a detailed OI. The instruction will include:

(a) Safety precautions and controls.
(b) Firefighting procedures.
(c) Personnel limitations.
(d) Vehicle parking requirements.
(e) Fuel servicing requirements.
(f) Maintenance restrictions.
(g) Emergency actions.

(5) Follow applicable electromagnetic radiation criteria.

(6) Make available suitable firefighting extinguishers.

12-4. Peacekeeper Separation. General explosives safety standards and Q-D criteria apply to the Peacekeeper missile except as outlined below:

a. When stages 1, 2, and 3 are assembled at other than a silo launch facility (with or without stage 4 or warheads being attached), the net explosives equivalency for the missile is 202,000 pounds, class/division 1.1.

b. When the missile is in a silo launch facility or during missile installation or removal from the silo, the net explosives equivalency is 20,000 pounds, class/division 1.1. This equivalency is to be used only for calculating intermagazine and intraline separations, and for use in risk assessments based on blast overpressure (chapter 5, section E). Applicable PTR and IB distances are:

(1) PTR--1,050 feet.
(2) Inhabited building--1,750 feet.

12-5. Specific Items and Situations. Some munitions have been tested sufficiently over the years that explosives criteria have been adopted for the specific item or situation. Table 12-1 gives these criteria.

Table 12-1. Minimum Distances for Specific Items and Situations.

LINE	ITEM/SITUATION	QUANTITY OF EXPLOSIVES	REQUIRED DISTANCE (FEET)		
			IB	PTR	IL
1	Above ground storage of demolition explosives, thin case or low fragmentation munitions, and in-process explosives.	100 lbs NEW or less	670 (1)	400 (1)	50-80 (2)
2		101-11,400 lbs NEW (3)	900 (1)	540 (1)	84-406 (2)
3		101-30,000 lbs NEW	1250 (1)	750 (1)	84-560 (2)
4	Earth covered igloos - all munitions and explosives.	1-199 lbs NEW	500 front 250 side/rear	300 front 150 sd/rr	(2) (4)
5		200-499 lbs NEW	700 front 250 side/rear	420 front 150 sd/rr	(4) (5)
6		500-11,400 lbs NEW (3)	900	540	(4) (5)
7		500-45,555 lbs NEW	1250	750	(4) (5)
8	Locations where structures, blast mats, and personnel shielding will completely confine fragments and debris (for igloo see 4 above).	50 lbs NEW or less	K40/50	K24/30	(2)
9	Explosive detector dog training facilities or buildings.	5 lbs NEW or less dispersed in structure	100	100	50
10	Explosive detector dog training Security Police Academy, Lackland AFB, TX.	10 lbs NEW or less dispersed in structure	100	100	50
11	2.75" rockets having 4-in parallel and vertical separation.	all quantities	400	240	50 (4)
12	AIM-7 series AAM missiles without WAU-17 warhead:				
13	Single missiles separated according to paragraph 12-6b.	all quantities	700 (6)	420 (7)	(2) (4)
14	Packed in AAM containers - igloo storage only.	all quantities	Same as (8) 4 above	Same as (8) 4 above	(2) (4)

NOTES:

1. Use incremental K40/50 distances when fragments or building debris are not involved. Thin cased or low fragmentation munitions present no more hazard than a MK82 bomb, when in doubt, contact HQ AFISC/SEWV or OO-ALC/MMWK.
2. Use K18 distance for the maximum creditable event (MCE); 50 feet minimum.
3. Use inhabited building distance shown to replace the minimum 1250-foot fragment distance only when there are less than 25 unrelated people exposed in any arc encompassing 45 degrees from 900 to 1250 feet from the PES.
4. Does not provide protection against fragments.
5. Use K18 to front, K16 to sides, K12 to rear for MCE; 50 feet minimum.

Table 12-1. Continued.

LINE	ITEM/SITUATION	QUANTITY OF EXPLOSIVES	REQUIRED DISTANCE (FEET)		
			IB	PTR	IL
15	AIM-7 series AUR missiles with WAU-17 warhead:				
16	Alternately stacked containers according to paragraph 12-6c, in igloo storage only.	all quantities	Same as 4 above (8)	Same as 4 above (8)	(5)
17	Alternately stacked containers according to paragraph 12-6c, in open storage or above ground magazines.	all quantities	400	240	25 (5)
18	AURs on trailers with or without other AIM-7/9s, stored in igloos.	total qty of all W/Hs radially aligned	Same as 4 thru 7 (8)	Same as 4 thru 7 (8)	(5)
19	AURs on trailers with other AIM-7s (not WAU-17), not stored in igloos.	2-24 warheads radially aligned	700	420	(2) (4)
20	AURs on trailers with other AIM-7s (with WAU-17) and/or with AIM-9s, not in igloo storage.	2-4 W/Hs radially aligned	400	240	(2) (4)
21	AURs on trailers with other AIM-7s (with WAU-17) and/or with AIM-9s, not in igloo storage.	5-24 W/Hs radially aligned	700	420	(2) (4)
22	Single AIM-9 series missiles, separated according to paragraph 12-6d, in all PESs (includes Chaparral).	all quantities	400	240	50 (8)
23	AGM-65 series missiles separated according to paragraph 12-6f.	1 missile	400	240	73 (4)
24		2 or 3 on launcher	500	300	115 (4)
25	MK82 GP bombs in the open or light structures.	1 bomb	670	400	104 (4)
26		2 bombs	860	515	131 (4)
27		3-5 bombs	1080	650	(2) (4)
28		6-10 bombs	1240	745	(2) (4)
29	M117 GP bombs in the open or in light structures.	1 bomb	690	415	415 (4)
30		2 bombs	820	490	490 (4)
31		3-5 bombs	1020	610	(2) (4)
32		6-120 bombs	1470	880	(2) (4)

NOTES (cont'd):

6. Reduce to 400 feet when barricaded according to paragraph 12-6i.
7. Reduce to 240 feet when barricaded according to paragraph 12-6i.
8. Missile fragments are contained, therefore, since only the contents of one container will react, the secondary igloo debris distances (from line 4 above) apply.

12-6. Tactical Missile Separations:

a. General Information. Many tactical (air-to-air and air-to-ground) missiles contain warheads with relatively small explosive charges. Some of these warheads have been tested to determine their explosive hazards and characteristics. Results indicate that sympathetic detonation can often be prevented by one or more of the following methods.

NOTE: Before reduced criteria can be applied, proper tests must be conducted and results accepted.

(1) Separating warheads by a minimum distance determined during testing.

(2) Positioning missiles so that warheads are not in radial alignment; that is, they are forward of, or to the rear of, each other. This is due to the fact that the fragments from these warheads travel radially and are the major cause of initiation of adjacent warheads.

(3) Positioning missiles so that the motor of another missile is positioned between two warheads.

(4) Storing missiles in containers, with the container walls and packing material preventing propagation between adjacent containers.

b. AIM-7 Missile (Except With WAU-17 Warhead):

(1) A warhead detonation will not cause sympathetic detonation of adjacent AIM-7 warheads, provided:

(a) The warheads of adjacent AIM-7 missiles are separated by 5 inches or more.

(b) The AIM-7 warheads are separated from all AIM-9 warheads by at least 22 inches.

(c) Those warheads that do not meet the separation requirements of (a) or (b) above are not radially aligned.

(2) When the conditions in (1) above are met, the NEW of a single AIM-7 warhead will be used in Q-D calculations. Hazardous fragment distance for a single missile detonation is 700 feet.

(3) AIM-7 missiles that explode in an all-up-round (AUR) container will result in the sympathetic detonation of all four warheads. The detonation will not propagate to warheads in adjacent containers, either vertically or horizontally. Therefore, a stack of missiles in AUR containers has an MCE of four warheads.

c. AIM-7 Missiles With WAU-17 Warhead. Fragments from this warhead are capable of initiating other mass-detonating explosives at large separation distances if no fragment barrier is provided. Because of this, WAU-17 warheads are assumed to be able to sympathetically detonate any other class/division 1.1 explosives in radial alignment with the warhead, unless a specific test has shown otherwise.

(1) Testing of the AIM-7 with the WAU-17 warhead in the CNU-series AUR container shows that four radially aligned warheads in a container (144 pounds NEW total) will all detonate if a single warhead detonates. However, the detonation will not transfer to adjacent containers, side-by-side, even if these warheads are radially aligned. A detonation will, however, transfer vertically in a stack of radially aligned AUR containers. To prevent this, containers within a single vertical stack must be alternated, nose-to-tail.

(2) The hazardous fragment distance for the WAU-17 warhead varies with the number of warheads involved in a detonation, from a low of 400 feet for detonations involving four warheads to a maximum of 1,600 feet for detonations involving 59 or more warheads. This is due to the fact that each warhead expels relatively few fragments, requiring progressively more warheads to meet the hazardous fragment density criteria (1 per 600 square feet (ft^2)) at greater distances.

d. AIM-9 Missiles. A warhead detonation will not cause sympathetic detonation, provided adjacent AIM-9 missiles are separated by 22 inches or more, or warheads are not radially aligned. If these conditions are met, the NEW of a single AIM-9 warhead may be used in Q-D calculations. Hazardous fragment distance for a detonation of AIM-9 missiles is 400 feet. For AIM-9 missiles in AUR containers, the NEW of the four warheads in a single container will be used for Q-D calculations. A detonation in one AUR container will not propagate to any adjacent container.

e. Mixed Trailer Loads. AIM-7 and AIM-9 trailer configurations shown in TO 11-1-38 use the provisions in a through d above to minimize the results of a single warhead detonation.

(1) In most cases, a mishap detonation is limited to a single AIM-7 warhead (except WAU-17) or two AIM-9 warheads. Where two AIM-9 warheads are not separated by the required 22 inches, but all other warhead-to-warhead separations are met, the effective NEW for the trailer is the greater of one AIM-7 warhead or two AIM-9 warheads.

(2) For trailers carrying AIM-7 missiles, without the WAU-17 warhead, and AIM-9 missiles, the required separation distances are 22

inches. The effective NEW for the trailer is the total of all missiles that do not have 22 inches separation between the AIM-7s and AIM-9s.

(3) For trailers carrying AIM-7 missiles with the WAU-17 warhead and AIM-9 missiles, the effective NEW for the trailer will be the total of those AIM-7 and AIM-9 missiles in radial alignment.

f. AGM-65 Missiles. The explosives weights of individual AGM-65 missiles or loaded launchers need not be added together if adjacent missiles or launchers are separated by at least 130 inches and the nose of any AGM-65 missile does not point at any other missile.

g. AGM-88 Hi-Speed, Antiradiation Missile (HARM):

(1) When being stored or transported in its AUR container, the missile is considered as class/division (04)1.2, with a net explosives equivalency per AUR container of 45 pounds.

(2) When not in its container, missiles are considered class/division 1.1 munitions with a hazardous fragment distance of 400 feet. A warhead detonation will not cause sympathetic detonation of adjacent warheads if they are separated by at least 6 inches, or if the warheads are not radially aligned.

h. Missile Fragment Barriers. Barriers capable of stopping warhead fragments may be used to reduce or eliminate the the minimum fragmentation distance required for IB separation for tactical missiles. Barricades listed in paragraph 5-13d are adequate. Engineering analysis or testing must be used to determine the adequacy of other types of barricades. Fragment barricades must meet a "one degree rule" analogous to the "two degree rule" in paragraphs 5-13a and b.

12-7. Aircraft Criteria. Unless otherwise specified, the Q-D criteria for aircraft loaded with explosives and munitions is the same as the distance required for the explosives and munitions without the aircraft present. In many instances, the separation afforded by the positions the munitions are loaded on the aircraft will provide adequate separation to prevent sympathetic detonation. In other instances, the aircraft will provide an adequate barrier to prevent sympathetic detonation of munitions on the opposite side of the fuselage.

a. B-52 Aircraft Loaded With Nuclear Weapons. The B-52 aircraft loaded with any load containing only nuclear weapons is authorized an inhabited building clear zone of 760 feet. The PTR clear zone requirement is 460 feet.

b. Tactical Missiles on Aircraft. Missiles loaded on aircraft that meet the separation requirements of paragraph 12-6 will have a MCE of one missile. Additionally, AIM-7 missiles (with WAU-17 warhead) loaded on fuselage stations will not propagate to another missile through the fuselage even though they are in radial alignment.

c. Bombs on Tactical Aircraft. Class 1, division 1 bombs loaded on one wing of an aircraft can all be expected to mass detonate in the event of an accident. However, when line-of-sight fragment path is interrupted by the fuselage, propagation from weapons on one wing to weapons on the other wing will not occur. Accordingly, where the aircraft fuselage prevents line-of-sight between wing loaded stations, the NEW will be computed based on the total of all munitions on one side of the aircraft. In any situation where weapons are loaded on the centerline station, the entire aircraft load would contribute to a MCE.

Section B—Special Storage Configurations

12-8. General Concept. Chapter 5 requires that all explosives (except class 1, division 4) in any location be added together when calculating the NEW for that location. Tests show that by controlling the configuration and orientation of the explosives, the NEW can be limited to less than the total explosives content present. The rules are specified below. Not all situations will result in a reduced clear zone, but rather may increase the explosives capacity within existing clear zones for the location. Testing proved that the MCE will be limited in the event of an accident.

12-9. Buffered Storage Concept. Propagation can be prevented between stacks of tritonal filled MK82 and MK84 bombs, provided the conditions listed in a and b below are met. The following conditions must be satisfied before the buffered storage may be applied. At that time, the NEW for Q-D purposes is the explosives weight of the largest stack of bombs plus the explosives weight of the intervening buffer material.

a. For bomb stacks greater than 24,000 pounds in earth covered magazines, aboveground magazines, or open stacks:

(1) Bomb stacks are limited to 64 MK84 or 312 MK82 bombs. Combined stacks are limited to 60,500 pounds NEW.

(2) An acceptable buffer material must be used between stacks of bombs. Acceptable buffer materials are:

(a) Palletized 20 millimeter (mm) ammunition.

(b) Palletized 30 mm ammunition.

(c) CBU-58s packaged two per metal container.

(d) Analogous buffers. Authorized configurations for buffered storage will have a drawing number assigned by AFISC. Units that want to use different configurations or buffer materials must submit definitive drawings through the MAJCOM to AFISC/SEWV for approval. These new buffers will consist of class 1, divisions 2 and 4 or inert materials which are arranged so that at least 500 pounds of buffer material are behind each square foot of the presented area of the bomb stack. Buffer materials and configurations must be reviewed and approved by both AFISC and the DOD Explosives Safety Board (DDESB) before units may employ them.

(3) Buffer materials must be positioned between the two stacks of bombs to prevent line-of-sight exposure between stacks.

(4) Steel nose and tail plugs must be used in all bombs.

(5) Bombs are arranged so the noses of the bombs in each stack are facing the buffer.

(6) A minimum of 38 feet is maintained between the nearest bombs of the separate stacks.

(7) The stacks will be arranged within a structure so that access is possible to verify the configuration.

b. For bomb stacks of 24,000 pounds or less:

(1) Buffer materials as described above will have an areal density of 250 pounds per square foot.

(2) Buffer materials must be positioned so there is no line-of-sight path between stacks of bombs.

(3) Steel nose and tail plugs are installed in all bombs.

(4) Bombs must be arranged so the noses of the bombs in each stack are facing the buffer.

(5) A minimum of 20 feet is maintained between bomb stacks.

c. The above criteria is approved for storage in continental United States (CONUS) and overseas locations where US explosives safety standards are the only criteria applied. In Europe, or other locations where host nation has established safety criteria, these principles must be accepted by the host nation before they may be applied.

d. Only serviceable munitions may be used in the bomb stacks or the buffer stacks. Requests for a waiver to this provision will be sent through the MAJCOM to HQ AFISC/SEWV.

12-10. Angled Storage of Munitions in Hardened Aircraft Shelters (HAS). By controlling the orientation of weapons in relation to each other, the MCE of an event can be limited. When the following rules are complied with, the Q-D reductions identified can be applied.

a. Place single bombs and loaded multiple ejector racks (MER), triple ejector racks (TER), or bomb rack units (BRU) at a 15 degree angle along one shelter wall. Angle the bomb and rack away from the aircraft and point the tails of the weapons toward the wall.

b. Maintain a 4-foot separation from MK-84s to other weapons.

c. Maintain a 30-inch separation from MK-82s to other weapons.

d. Do not align the fuse cavity of one bomb with the fuse cavity of a second bomb. (Empty fuse cavities form a shaped charge jet when the bomb is initiated. Fuses and boosters, when installed, will help prevent the jetting effect.)

e. Do not place weapons along the opposite HAS wall directly across from another bomb, MER,TER, etc.

f. Do not place bombs in an area on either side of another bomb that is bounded by two lines, 20 degrees forward and aft of lines perpendicular to the bomb centerline and starting at the nose and the tail of the bomb, respectively (figure 12-1).

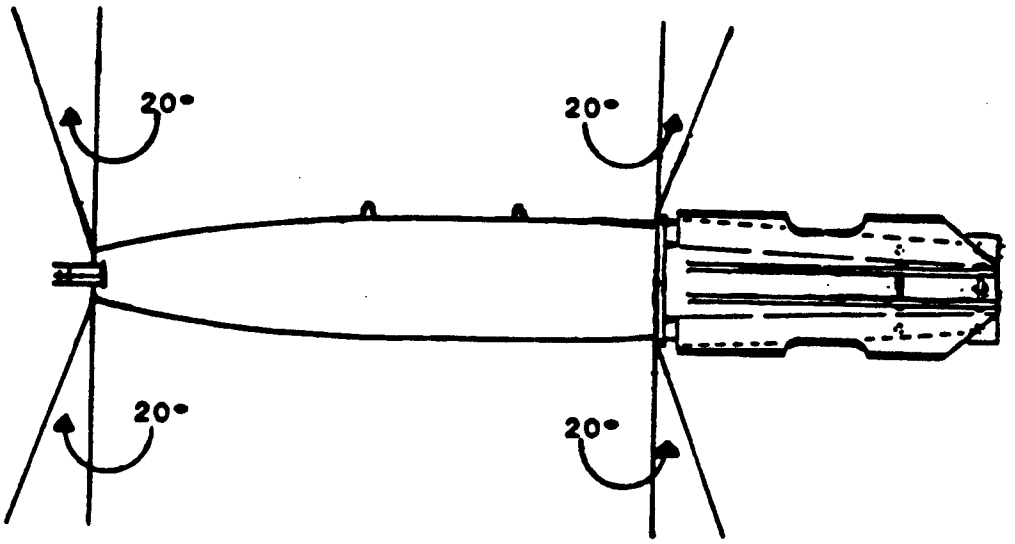

Figure 12-1. Fragment Zones of General Purpose Bombs.

g. If the above criteria is complied with, the following is the MCE applied to the HAS:

(1) Single MK-82s equals 192 pounds NEW.

(2) Single MK-84s equals 945 pounds NEW.

(3) TERs equal three MK-82 bombs (576 pounds NEW).

(4) MERs and BRUs equal three MK-82 bombs (576 pounds NEW).

(5) Any combination of the above items, use the largest weight of any item being stored.

h. When an explosives loaded aircraft is in the shelter, the weight of the explosives on the aircraft and the stored weapons must be combined if either the weapons on the aircraft or the stored weapons are in the fragment zone, described in f above, of the other weapons.

12-11. Weapons Storage Vaults in Hardened Aircraft Shelters. The special weapon contents of a weapons storage vault (WSV) will not contribute to an explosion in a HAS if certain separations are maintained. The following rules govern when determining the explosives content of a HAS containing a WSV:

a. The explosives in the WSV need not be considered when computing the NEW of the HAS if the vault is closed and the conventional munitions are at least 25 feet or K1.9 (whichever is greater) from the vault.

b. If the vault is opened with conventional munitions present, the NEW of the special weapons must be added to the weight of the conventional munitions. Therefore, the vault may not be opened with conventional munitions present unless the MCE of the shelter contents, including the contents of the vault, is less than the explosives limit of the shelter.

transported together without significantly increasing either the probability of a mishap or, for a given quantity, the magnitude of the effects of such a mishap.

Dangerously Unserviceable Munition. A munition or explosive whose probability of inadvertent activation or functioning is substantially greater than was intended. These may include partially or fully armed or partially expended, broken, damaged or leaking items, etc.

Deflagration. A rapid chemical reaction in which the output of heat is enough to enable the reaction to proceed and accelerate without input of heat from another source. The effect of a true deflagration under confinement is an explosion. Confinement of the reaction increases pressure, rate of reaction, and temperature and may cause transition into a detonation.

Demilitarize. To mutilate, disarm, or accomplish any other action required to prevent the further use of such equipment and materiel for its original intended military or lethal purpose.

Detonation. A violent chemical reaction within a chemical compound or mechanical mixture evolving heat and pressure. A detonation is a reaction or shock wave which proceeds through the reacted material toward the unreacted material at a supersonic velocity.

Deviation. Written authorization which allows a specific departure from a mandatory requirement of this regulation other than quantity-distance criteria.

Dustproof. Constructed or protected so that dust will not interfere with successful operation.

Dust Tight. Constructed so that dust will not enter the enclosing case.

Electrical Equipment. A general term including apparatus, appliances, devices, wiring, fixtures, fittings, and the like used as a part of, or in connection with, an electrical installation.

Electroexplosive Device (EED). An explosive or pyrotechnic component that initiates an explosive, burning, electrical, or mechanical train and is activated by the application of electrical energy.

Electromagnetic Radiation (EMR). Radiation made up of oscillating electric and magnetic fields and propagated with the speed of light. Includes gamma radiation, x-rays, ultraviolet, visible and infrared radiation, and radar and radio waves.

Exception. A waiver, exemption, or deviation.

Exemption. A relatively long-term departure from a mandatory requirement of the quantity-distance standards of this regulation.

Explosion Proof. Used in referring to electrical equipment; specifically, to equipment enclosed in a case that can withstand an internal burning or explosion of elements inside the case, and can prevent ignition by spark, flash, or explosion of any outside gas or vapor surrounding the enclosure.

Explosive. A substance or mixture of substances which under external influences, is capable of rapidly releasing energy in the form of gases and heat.

Explosives. All ammunition, munition fillers, demolition material, solid rocket motors, liquid propellants, cartridges, pyrotechnics, mines, bombs, grenades, warheads of all types, explosive elements of ejection and aircrew egress systems, air-launched missiles and those explosive components of missile systems and space systems, and assembled kits and devices containing explosive material. Explosives, explosives weight, net weight, and other like terms also refer to the fillers of an explosive item. Fillers may be explosive mixtures, propellants, pyrotechnics, military chemicals, and other toxic substances. This term does not include liquid fuels and oxidizers that are not used with missiles, rockets, and other such weapons or explosive items.

Explosives Area or Location. Any area or location specifically designated and set aside from other areas and used for manufacturing, testing, maintenance, storage, demilitarization, shipping and receiving, and other similar type explosives operations. Such areas may also be referred to as explosives parking or loading

areas when armed or explosives-loaded aircraft are involved.

Explosives Facility. Any structure or location containing explosives, except aircraft and aircraft parking areas.

Explosives Hazard. Any condition which may result in the occurrence of an explosives mishap or contribute to the severity of an explosives mishap should one occur.

Explosives-Loaded Aircraft. An aircraft is "explosives-loaded" when it carries munitions or explosives, internally or externally. The term does not include explosive components of aircrew escape systems or pyrotechnics installed in survival and rescue kits.

Explosives Operations Office. Any office adjacent to or within an explosives area in which operational administrative functions pertaining to explosives are performed. Also known as a field office.

Explosives Safety. The aggregate area of activity concerned with preventing the premature, unintentional, or unauthorized initiation of explosives and devices containing explosives and with minimizing the effects of explosions, combustion, toxicity, and any other harmful effects.

Explosives Safety Distance (Quantity-Distance). An expression of the quantity versus distance principle involved, or the toxic hazard distance used in determining acceptable separations between given explosive sources and given exposures to the hazard. For the purposes of this regulation, the term "Quantity-Distance" or "Q-D" will be used (see "quantity-distance").

Explosives Storage Area. A designated area of explosives-containing facilities set aside for the exclusive storage or "warehousing" of the bulk of the base explosives stocks. Facilities include igloos, magazines, operating buildings, modules, revetments, and outdoors storage sites.

Exposed Explosives. Explosives that are actually visible (such as unpackaged bulk explosives, or disassembled or open components) and that are susceptible to initiation directly by static or mechanical spark, or create (or accidentally create) explosive dust, or give off vapors, fumes, or gases in explosive concentrations.

Exposed Sites (ES). Any facility or location which requires separation from a potential explosion site. An ES may or may not contain explosives. Previously known as a target (in waiver requests) or acceptor (in explosives testing).

Field Office. See "explosives operations office."

Fire-Resistive (Structural). The type of construction in which the structural members, including walls, partitions, columns, floor, and roof construction are of "noncombustible" materials that either do not burn or have specific fire resistance ratings in terms or hours. (See AFM 88-15.)

Fire Retardant. Combustible materials or structures which have been treated or had surface coverings designed to retard ignition or fire spread.

Fire Wall. A wall of fire-resistive construction designed to prevent the spread of fire from one side to the other. (Also referred to as a fire division wall.)

Flame Retardant or Resistant (Flame-Proof). Material designed or specially treated or coated to resist combustion.

Fragmentation. The breaking up of the ballistic case containing a chemical compound or mechanical mixture when an explosion takes place. Fragments may be complete items, subassemblies, or pieces thereof, as well as pieces from the building, aircraft, revetment, equipment, or other segments of the environment.

a. Fragment Distance. The limiting range, based on a specific density of hazardous fragments, expected from the type and quantity of explosions involved. Used in establishing certain quantity-distance (Q-D) criteria.

b. Hazardous Fragment. A fragment having an impact energy of 58 foot-pound or greater.

c. Hazardous Fragment Density. A density of hazardous fragments exceeding one per 600 square feet.

Hazard Classification. Identifies the hazardous characteristics of explosive items by their

assignment to established hazard categories governing storage and transportation. These categories are: hazard class/division; storage compatibility group; Department of Transportation (DOT) class; and DOT marking.

Hazardous Locations for Electrical Equipment. Locations where flammable gases or vapors are, or may be, present in the air in an explosive or ignitable mixture, or where combustible dust or easily ignitable particles or fibers may be present.

High Explosive Equivalent or Explosive Equivalent. The amount of a standard explosive which, when detonated, will produce a blast effect comparable to the effect which results at the same distance from the detonation or explosion of a given amount of the material for which performance is being evaluated. It is usually expressed as a percentage of the total net weight of all reactive materials contained in the item or system. (For the purpose of this regulation, TNT is used for comparison.)

Holding Area. See "ready explosive facility."

Holding Yard. A specified area designed or used to accommodate explosives-laden carriers before movements to a storage area or to their next destination. (Called "wharf yard" at seaports.)

Igloos (All Types). See "magazine."

Incapacitating Agent. An agent that produces temporary physiological or mental effects, or both, which will render individuals incapable of concerted effort in the performance of their assigned duties. (Excludes riot control agents listed in table 9-1.)

Incremental Distance. The distance based solely on overpressure protection (K factor) without regard to fragment protection. (Example: For 5000 pounds net explosives weight (NEW), the incremental K40/50 distance would be 685 feet instead of the 1,250 feet inhabited building (IB) distance separation required because of minimum fragment protection.)

Inert. As used here, to mean contains no explosives, active chemicals, or pyrotechnics, but is not necessarily noncombustible.

Inhabited Building. All buildings, locations, or structures, other than explosives locations, used in whole or in part as habitations or places of assembly for personnel, both within and outside military establishments. For example: schools, churches, residences (quarters), passenger terminals, shops, factories, hospitals, theaters, dining halls, or hangars.

Inspection Station. A designated location at which vehicles and railcars containing ammunition or explosives are inspected.

Interchange Yard. An area set aside for the exchange of railroad cars or vehicles between the common carrier and DOD activities.

Intermagazine Distance. The minimum distance allowed between explosives storage locations, as prescribed for various types and quantities of explosives. This distance is expected to prevent propagation by blast (shock wave) and to provide a reasonable degree of protection against propagation due to fragments.

Intraline Distance. The distance to be maintained between any two operating buildings and sites within an operating line, at least one of which contains or is designed to contain explosives.

Intraline Operations. Those operations done within one operating line.

Joint Use Airfield. An airfield serving both DOD and commercial aircraft. An airfield serving solely DOD, DOD chartered, or non-DOD aircraft on DOD authorized business is not joint use.

Launch Pads. The load-bearing base, apron, or platform upon which a rocket, missile, or space vehicle and its launcher rest during launching.

License. Formal permission to store explosives or munitions outside the sited explosives storage area.

Liquid Propellants. Any liquid combustible fed to the combustion chamber of a rocket engine.

Loading Docks. Facilities or structures designed and installed for transferring material to

or from motor vehicles, railcars, or cargo-type aircraft.

Magazine. Any building or structure, except an operating building, used for the storage of explosives. Magazines are of two general types: igloo (earth-covered) and aboveground (no earth covering).

a. Igloo (Earth-Covered Magazine). Steel or concrete arch structures covered with earth mounding. Igloos may have separate or common earth covers. Igloos are divided into two categories.

(1) Standard Igloos. Those igloos meeting the requirements of approved definitive drawings (or similar acceptable contractor facilities), or originally sited and approved as "standard igloos," regardless of construction details. Standard igloos have reinforced concrete end walls.

(2) Nonstandard Igloos. Those igloos constructed with other than concrete or steel arches, or other than concrete end walls.

b. Aboveground Magazine. Any structure or facility, without sufficient earth covering, used for the storage of explosives.

Magazine Area. Same as "Explosives Storage Area."

Mass-Detonating Explosives. High explosives, black powder, certain propellants and pyrotechnics, and other similar explosives. They may be alone or in combination, or loaded into various types of ammunition or containers. Most of the entire quantity can explode instantaneously when a small portion is subjected to fire, to severe concussion or impact, to the impulse of an initiating agent, or to the effect of a considerable discharge of external energy. Such an explosion will generally cause severe structural damage to adjacent objects. The explosion may propagate to other items of ammunition and explosives, stored near enough to (and not adequately protected from) the initially exploding pile, so quickly that two or more quantities must be considered as one for quantity-distance (Q-D) purposes.

Modules. A barricaded area composed of one or more connected cells (revetments) with hard surface storage pads separated from one another by the prescribed barricade. A light metal building may be used in individual cells.

Navigable Streams. Only those parts of streams, channels, or canals capable of being used in their ordinary or maintained condition as highways of commerce over which trade and travel may be done in the customary modes. They do not include streams that cannot be navigated by barges, tugboats, or other large vessels, unless they are used regularly and extensively for the operation of pleasure boats (see "public traffic route").

Net Explosives Weight (NEW). The total quantity, expressed in pounds, of explosive material or high explosives equivalency in each item or round to be used when applying quantity-distance (Q-D) criteria or other standards.

Operating Location. A building, facility, or site in which operations pertaining to the manufacturing, processing, handling, loading, or assembling of ammunition and explosives are done. This includes preload facilities for aircraft multiple and triple ejector racks. Flightline explosives loading activities in areas defined as "explosives area or locations" are not operating locations within the meaning of this paragraph.

Operating Line. A group of operating buildings, facilities, or related work stations arranged to allow the performance of consecutive steps in explosives operations.

Operational Shield. A barrier constructed at a particular location or around a particular machine or operating station to protect personnel, material, or equipment from the effects of a localized fire or explosion.

Outdoor Storage Sites. An open location selected within an explosives area or location for storage of explosive items or components.

Overpressure. The pressure, exceeding the ambient pressure, manifested in the shock wave of an explosion.

Passenger Railroad. Any railroad which carries passengers for hire (see "public traffic route").

Passenger Transport Operations. (Defined as follows only for the purpose of applying explosives quantity-distance (Q-D) tables to aircraft.) Transport of military dependents and ci-

vilians other than those employed by or working directly for DOD components. The following are not considered passenger transport operations:

a. Infrequent flights by base and command administrative aircraft that may occasionally provide "space available" travel.

b. Transport of civilians employed by any DOD component.

c. Contractor technical representatives traveling to or from direct support assignments at DOD installations.

Potential Explosion Site (PES). A location or facility which contains or is expected to contain explosives. Previously known as a source (in waiver requests) or donor (in explosives testing).

Preload Location. An operating location used specifically for preloading munitions onto multiple and triple ejector racks, missile launchers, or internal bomb racks for later loading onto or into aircraft (see "operating location").

Prohibited Area. A specifically designated area at airfields, seadromes, or heliports in which all explosives and explosives facilities are prohibited.

Propagating Explosion. The communication of an explosion (detonation or deflagration) from one potential explosion site to another by fire, fragment, or blast (shock wave), where the interval between explosions is long enough to limit the total overpressure at any given time to that which each explosion produces independently. This condition, where detonation occurs, would be evidenced by a distinct shock wave from each detonation, with a discernible pressure drop between each explosion; see "simultaneous detonation."

Public Highway. Any public street, road, or highway used by the general public for vehicular traffic. Streets and roads on military (DOD) installations are not usually considered public highways unless they are used for through traffic other than that related to the work of the installation (see "public traffic route").

Public Traffic Route. Any public highway, navigable stream, passenger railroad, or aircraft taxiway.

Quantity-Distance (Q-D). The quantity of explosive material and distance separation relationships which provide defined types of protection. These relationships are based on the level of risk considered acceptable for each stipulated exposure and are tabulated in the Q-D tables. Separation distances are not absolute safe distances but are relative protective or safe distances.

Ready Explosives Facility. A designated area, usually near the flightline, where munitions and components are temporarily positioned awaiting transfer to aircraft. (Often referred to as flightline munitions holding area, holding point, or transfer point.)

Remote Operation. An explosives process that has been determined to pose an unacceptable risk to exposed personnel from an energetic reaction, and for which the appropriate protective measures have been taken.

Responsible Commander. The commander having responsibility for the installation safety program.

Revetment. An explosives location barricaded on at least three sides. The revetment may incorporate a structure or an overhead cover.

Riot Control Agent. A chemical that produces temporary irritating or disabling effects when in contact with the eyes or when inhaled.

Safety Shoes. Specifically designed footwear of three general types, identified as:

a. Industrial safety shoes with hard toes.

b. Dielectric safety shoes having no exposed metal for protection against electrical hazards. They have high resistance to electric current flow up to 14,000 volts.

c. Conductive sole safety shoes. They have low resistance to electric current flow (450,000 ohms or less).

Service Magazine. An auxiliary building servicing an operation used for the intermediate storage of explosives. Separation distances are based on explosives in the service magazine; not the operations location.

Simultaneous Detonation. The detonation of two or more items that are near each other, with one item detonating after the next, and with

such short intervals between detonations, that the overall detonation appears to have emanated from a single item. Pressures produced by these independent detonations grow together (coalesce) within very short distances from their sources to cause peak overpressures greater than that of each independent source.

Static Test Stand. A location whereon liquid propellant engines or solid propellant motors are tested in place.

Substantial Dividing Wall. A wall designed to prevent simultaneous detonation of explosives on opposite sides of the wall. Such walls may not prevent propagation (depending on quantities and types of explosives involved) and walls provide personnel protection only where small quantities of explosives are involved and then only when the explosives are separated from the walls by an open space.

Suspect Vehicle and Railcar Site. A designated location for placing vehicles or railcars containing explosives that are suspected of being in a hazardous condition. These sites also are used for vehicles that may be in a condition that is hazardous to their contents.

Toxic Chemical Agents. Chemical substances, irrespective of physical state, that may be used effectively in military operations to cause serious injury or death to personnel.

Unitary Chemical Weapon. A weapon which contains a premixed, fully effective lethal, incapacitating, or irritating chemical agent; not a binary chemical weapon.

Waiver. Written authority for a specific departure from a mandatory quantity-distance (Q-D) requirement of this regulation for a stated length of time.

Section B—Glossary of Abbreviations

AFLC	Air Force Logistics Command
AFOSH	Air Force Occupational Safety and Health
AFRES	Air Force Reserve
AFSC	Air Force Systems Command
AGE	Aerospace Ground Equipment
ALC	Air Logistics Center
ALCM	Air Launched Cruise Missile
AMRAAM	Advanced Medium-Range, Air-to-Air Missile
ANG	Air National Guard
ANSI	American National Standards Institute
ASD(A&L)	Assistant Secretary of Defense (Acquisition and Logistics)
ASME	American Society of Mechanical Engineers
ATA	American Trucking Association
AUR	All-Up-Round
AWG	American Wire Gauge
BRU	Bomb Rack Unit
BTO	Base Transportation Officer
cal/cm^2	Calories Per Square Centimeter
CBR	Chemical Biological Radiological
CBU	Cluster Bomb Unit
CFA	Controlled Firing Area
CFR	Code of Federal Regulation
CNU	Container Unit
COE	Corps of Engineers
CONUS	Continental United States
CP	Chemically Pured
CSC	Central Security Control
DBMS	Director of Base Medical Services
DDESB	DOD Explosives Safety Board
DFARS	Defense Federal Acquisition Regulations Supplement
DOD	Department of Defense
DOT	Department of Transportation
EED	Electroexplosive Devices
EMR	Electromagnetic Radiation
EOD	Explosives Ordnance Disposal
ERO	Engine Running On/Off
ERP	Effective Radiated Power
ES	Exposed Site
FAA	Federal Aviation Administration
FACC	Fire Alarm Communication Center
FAE	Fuel-Air-Explosives
FAR	Federal Acquisition Regulation
FLIP	Flight Information Publication
ft^2	Square Feet
GLCM	Ground Launched Cruise Missile
GP	General Purpose
HARM	Hi-Speed, Antiradiation Missile
HAS	Hardened Aircraft Shelter
HC	Hexachloroethane
HE	High Explosive
HEI	High Explosive Incendiary
HMMV	Highly Mobile Motorized Wheeled Vehicle
IB	Inhabited Building
IFR	Instrument Flight Rules
IHE	Insensitive High Explosive

IL	Intraline
IM	Intermagazine
JROD	Jet Remote Opening Device
kg	Kilogram
kv	Kilovolt
LCF	Launch Control Facility
LCL	Less Than Carload
LF	Launch Facilities
LOX	Liquid Oxygen
LP	Liquefied Petroleum
m	Meter
MAJCOM	Major Command
MCE	Maximum Credible Event
MCP	Military Construction Program
MER	Multiple Ejector Rack
MHT	Minuteman Handling Team
mm	Millimeter
MSA	Munitions Storage Area
MWR	Morale, Welfare, and Recreation
NATO	North Atlantic Treaty Organization
NEC	National Electric Code
NEW	Net Explosives Weight
NFC	National Fire Code
NFPA	National Fire Protection Association
NGB	National Guard Bureau
NSN	National Stock Number
OI	Operating Instruction
OSHA	Occupational Safety and Health Association
PDC	Programming, Design and Construction
PES	Potential Explosion Site
POL	Petroleum, Oil and Lubricants
POV	Privately Owned Vehicle
psi	Pounds Per Square Inch
PTR	Public Traffic Route
PWP	Plasticized White Phosphorus
Q-D	Quantity-Distance
QA	Quality Assurance
R-F	Radio-Frequency
RFTF	Response Force Tactical Facility
RPV	Remotely Piloted Vehicle
RSCA	Rocket Storage, Checkout, and Assembly
RSU	Runway Supervisory Unit
SCBA	Self-Contained Breathing Apparatus
SCPS	Survivable Collective Protection System
SOFA	Status of Forces Agreement
SPO	System Program Office
SSCBM	Shipping and Storage Containers, Ballistic Missile
STAMP	Standard Air Munitions Package
TE	Transporter Erector
TEA	Triethylaluminum
TER	Triple Ejector Rack
TLV	Threshold Limit Value
TM	Technical Manual
TO	Technical Order
TOFC	Trailers on Flat Cars
TP	Target Practice
TPA	Thickened Triethylaluminum
UL	Underwriters' Laboratories
UN	United Nations
VFR	Visual Flight Rules
WCDO	War Consumables Distribution Objective
WP	White Phosphorus
WRM	War Reserve Material
WSA	Weapons Storage Area
WSV	Weapons Storage Vault

HOW TO COMPLETE AF FORM 2047, EXPLOSIVES FACILITY LICENSE

1. Item 1. Self-explanatory.

2. Item 2. Self-explanatory.

3. Item 3. The installation explosives safety officer will assign this number which will consist of the last two digits of the calendar year and a serial number, assigned in numerical sequence. (For example, the first license issued in 1990 would be numbered 90-1, the second would be 90-2.)

4. Section I:

a. Item 4. Insert building number as shown on TAB C-1 of the base comprehensive plan. For an unnumbered facility, insert narrative description such as outdoor storage (intransit).

b. Item 5. Insert, for example, alert hanger, small arms range, egress shop, security and administrative building, rod and gun club, or life support shop, as applicable.

c. Item 6. Identify by number assigned.

d. Item 7. Enter if item 8 is entered.

e. Item 8. Enter if item 7 is entered.

f. Item 9. Enter a brief description of facility.

2. Section II:

a. Column A. Insert class/division (DOT Class may be used when facility is used exclusively for explosives in transportation cycle).

b. Column B. Insert compatibility groups authorized by TO 11A-1-46 or AFR 71-4, as applicable.

c. Column C. Insert stocklist nomenclature for each specific type item authorized in the location and national stock number (NSN).

d. Column D. Insert number of items authorized (both serviceable and unserviceable).

e. Column E. Insert total explosives weight based on number of items authorized (class/division 1.4 items are excluded).

f. Column F. Insert fire symbol and chemical hazard symbol as required.

6. Section III. Commander of organization requesting the license will be the certifying official.

7. Section IV. The individual who is assigned installation weapons safety responsibilities completes and signs all copies.

8. Remarks. The base fire chief will enter the specific type, quantity, and physical placement of fire extinguishers for the location. Also, when proper, conditions of approval, expiration date (if other than indefinite), reasons pertaining to disapproval, comments of requesting organization, technical manual references, personnel limits, etc., should be included.

9. Section V. Enter office symbols, dates, and names of coordinators.

EXPLOSIVES WAIVER/EXEMPTION/SITE PLAN — PAGE 1 OF 1 PAGES

SECTION I - GENERAL INFORMATION

ACTION NUMBER: USAFE-Hahn 88-S10/JWEC 9130 — BASE: Hahn

REFERENCED ACTION: N/A — REQUESTED EXPIRATION DATE: — APPROVED EXPIRATION DATE: — COST TO CORRECT:

SECTION II - SITE DATA

FACILITY OPERATION						POTENTIAL EXPLOSION SITE (EXPOSED SITES)										
FAC NO 1	NO. PEOPLE 2	DESCRIPTION 3	SPEED DIRV 4	CLASS/ DIV 5	USING ORG 6	FAC NO. 7	NO. PEOPLE 8	DESCRIPTION 9	SPEED DIRV 10	CLASS/ DIV 11	USING ORG 12	DIST ACT 13	DIST ORD 14	DIP FACTOR 15	WAIVE 16
1320	None	Igloo(33-15-11)80Ft	225K	1.1	USAFE-52EMS	892	65-M	Concrete/Masonry Maint Supv/Mans Ctrl	0	NA	USAFE-52EMS*	1,310'	1,095	K18	
						320	10-M	RFTF	0	NA	52SPS	1,525'	1,095	K18	
						1303	None	Above Gnd Mag, Barr	15K	1.2(04)	52EMS	411	365	IN	
910	6-M	Concrete/Masonry (CMU) M&I (DMGS Atch)	10K	1.1	USA-101ABN	1101	None	Igloo(33-15-11)60Ft	175K	1.1	52EMS	1,138'	1,020	K18	
						1103	"	" " "	115K	1.3	"	911	215	Tab 5-3	
						1505	9-M	CMU, Trl Maint	None	NA	"	411	390	K18	
						* All personnel assigned to USAFE-52EMS (SP support MSA)									
USAFE-Spangdahlem 88-S11/VYMF889003											Spangdahlem				
2464	65	SCPS-2, 3" Earth Cover	NA	NA	USAFE-52DCM	235	None	MAS, 3rd Gen	10K	1.1	*52TFW	205'	190'	K9	
						1313	5M	Flt line MAM	30K	1.1	52EMS	412'	280'	K9	
						564	None	MAS, 3rd Gen	361bs	1.1	52TFW	333'	None	NA	
1164	0	Abv Gnd Mag(Barr)	40K	1.2(04) 1.2(12) 1.2(16)	USA-8thArmy 8thArmy 8thArmy	1320	None	Igloo(33-15-11)80'	500K	1.1	52EMS	465'	355'	K4.5	
						888	21	Butler Bldg: AFK, TODO	0	0	52EMS	1,115	980'	K18	
						*All personnel are assigned to the 52TFW/DCM. We also expect to share these facilities with deploying units, who will be doing the same type of work, with the same type of hazards. They qualify for siting at K18.									

AF Form 943, MAR 88 PREVIOUS EDITIONS ARE OBSOLETE

Figure 1. Site Planning Sample.

HOW TO COMPLETE AF FORM 943 FOR SITE PLANNING

NOTE: Attachment 6 contains instructions for using AF Form 943 for waivers and exemptions.

1. General Information. If space is available after you enter the required data, you may enter additional explanatory information directly onto the form. Neatly type or print entries, as necessary. Submit a separate form for each siting. When this cannot be done, follow these guidelines:

a. Draw a line completely across the form immediately after the last entry.

b. Enter the applicable data for the new action as called for in section I.

c. Enter data for the new siting as done for the original siting. Continue onto next sheet if necessary.

2. Purpose of This Form. To describe a facility or operation and its relationship to explosives and nonexplosives sites where quantity-distance separations are required. (See example AF Form 943 included in this attachment.)

3. Section I:

a. Action Number. Identify the action as a site plan and designate in five parts as follows:

(1) The requesting MAJCOM designation, followed by the tenant MAJCOM designation where needed to show the siting is for a tenant PES (host and tenant, such as: USAFE-MAC).

(2) The base and location where the action is located (for example, Hill AFB, Hahn AB, Logan IAP, etc.).

(3) Calendar year designation, based on the date the original request is (or was) sent by the base (89,78, etc.). This number will remain unchanged for the duration of the request, including recurring reviews, renewals, and updates.

(4) An identifier for the type of request, followed by a sequence number. Use S for a site plan. Number each request sequentially for each calendar year. For example, the first site plan for the year would be S1. Where more than one PES is included in the request, include an identifier for each. For example; S4, S5, or S6. Cancelled requests will not affect the numbering of subsequent requests. For example, if site plan USAFE-Hahn 88-S10 were cancelled, the next siting submitted for Hahn AB in 1988 would be 88-S11.

(5) Programming, design and construction element. This number will be assigned by the base civil engineering function. (For example; VYHF889003).

b. Base. Location of the siting action. If other than a military base, list civilian or commercial address.

c. Referenced Action. Give the previous site plan number if the requested site plan is to modify an existing operation or facility. For example, if an RSCA was previously approved by site plan number ANG-Bosh AFB 89-S9, and the new siting is to add an additional maintenance bay, ANG-Bosh 89-S9 would be listed here. This number is not required for a new facility sited at Carroll AFB and is not a modification of the existing facility.

d. Requested Expiration Date. Leave blank.

e. Approved Expiration Date. Leave blank.

f. Cost To Correct. Leave blank.

4. Section II. For distance and explosives weight measurements, English or standard units of measure should be used unless it is impractical to do so. Do not mix standard (pounds and feet) with metric (kilograms and meters) measurements. Also, K-factors in this regulation are valid for use with standard measurement only.

a. Facility Operation. This section will be used to describe the facility or operation being sited. The site plan submission letter may be use to describe the siting as necessary to better explain the proposal.

(1) Column 1. Identify the facility or operation by its assigned number or other identifier (Bldg 123 or F123).

(2) Column 2. List the number of people normally employed at the location. Do not include visitors such as inspectors or quality control evaluators.

(3) Column 3. Describe the type of operation normally done at the location. For example, M&I, bomb build-up, AFK, trailer maintenance, SCPS-2, HAS (3rd Generation, Korean Flow Thru), etc. If more space is needed, explain it in the cover letter. In this case, an entry could refer the evaluator to paragraph 3e, of 52 TFW/CC letter dated 00 January 2000. Show definitive drawing numbers when available. Quantity-distance separation factor will be shown in column 15.

(4) Column 4. Show the actual net explosives weight computed according to chapter 5. This would show the proposed siting capacity for new PESs, or the previously approved weights for existing sites in the case of modifications or updates. Care should be exercised to ensure the weights listed here agree with other sitings where the proposed facility was shown as an ES. Capacity must always show the sited, waived, or exempted weights, whichever is greater. If not, contact MAJCOM safety personnel. Leave blank for nonexplosives sitings. For multiple room or bay facilities, show the NEW for each room or bay or list in the submission cover letter. Sited capacity should not exceed quantities authorized based on exposed sources.

(5) Column 5. Show the class/division of the munitions expected at the sited PES. For example, 1.1 bombs or 1.2 (12) projectiles. List separately for each room or bay as applicable.

(6) Column 6. Enter the MAJCOM and unit designation of the agency occupying the facility (USAFE-52EMS).

b. Potential Explosion Site (PES)/Exposed Site (ES). This section is used to describe the nature of facilities or operations within the clear zone of the proposed siting action. In this case, show all explosives facilities (PES) and nonexplosives facilities (ES). Additional information may be provided in the submission letter, or as attachments to the site plan.

(1) Column 7 through Column 12. Same data elements as shown for columns 1 through 6.

(2) Column 13. Show the actual distance from the facility listed in column 1 to facility listed in column 7. The distance should be shown in feet or other standard reference such as meters.

(3) Column 14. Indicate the quantity-distance separation required between columns 1 and 7. This figure will be calculated based on the degree of protection required for a standard facility or one that is hardened against blast and fragments. For example, squadron operations are required to be separated at intraline (K18) from explosives loaded aircraft. Normally, this would require a distance of 390 feet (K18) for an aircraft loaded with 10,000 pounds of 1.1 bombs. Siting a hardened operations facility would allow K7, and "150'" would be entered for column 14.

(4) Column 15. Enter the K-factor or other standard used to obtain the distance listed in column 14.

(5) Column 16. Leave blank.

5. Section III, IV, and V. Optional. Required only if a waiver or exemption is required. In this case, follow instructions in attachment 6. Signatures not required when the requesting authority signs the submission letter.

SITE PLAN CHECKLIST (See instructions on reverse)			IDENTIFICATION NO.
ITEM	INCLUDED	NOT APPLICABLE	COMMENTS
1. LOCATION PLAN (No replas)	X		SCALE 1" = 400"
2. AF FORM 943	X		
A. RUNWAYS/TAXIWAYS		X	☐ MILITARY USE ☐ JOINT USE
B. UTILITIES		X	
C. EMR HAZARDS		X	
3. PROPOSED FACILITY			
A. DEFINITIVE DRAWINGS		X	Definitive Drawings No Longer Valid
B. DEVELOPMENT DRAWINGS		X	
C. DOORS/WINDOWS	X		See 1391C Atch 3
D. SUBSTANTIAL DIVIDING WALLS/ BLAST DOORS	X		See 1391C, Atch 3
E. SHIELDING		X	
F. BLAST HARDENING		X	
G. EXEMPTION/DEVIATION		X	
H. HAZARDOUS ELECTRICAL LOCATION		X	
4 CHEMICAL/BIOLOGICAL MUNITIONS		X	
5 COORDINATION			
A. HOST GOVERNMENT (Non-US) APPROVAL		X	
B. TENANT MAJCOM APPROVAL		X	
6 CLEAR ZONE REDUCTION		X	No Change in Clear Zone
7. BCE CERTIFICATION			
A. RECONCILED WITH BASE COMPREHENSIVE AND DEVELOPMENT PLANS	X		This Project Reconciled w/Base C&D Plans
B. OFFBASE CIVILIAN PROPERTY/BASE BOUNDARY/EASEMENT NOT VIOLATED		X	

AF FORM JUL 83 941

Figure 1. Sample AF Form 941. Sample Checklist.

EXPLOSIVES WAIVER/EXEMPTION/SITE PLAN

PAGE 1 OF 1 PAGES

SECTION I - GENERAL INFORMATION

ACTION NUMBER: AFLC-TAC-Hill 89-W1/W2 SHYU 878032

BASE: Hill AFB, UT

REFERENCED ACTION: AFLC-Hill 71-S4

REQUESTED EXPIRATION DATE: 31 July 1993

APPROVED EXPIRATION DATE: 31 July 1993

COST TO CORRECT: $930,500.00

SECTION II - SITE DATA

FACILITY OPERATION						POTENTIAL EXPLOSION SITE (PES)/EXPOSED SITE (ES)										
FAC NO 1	NO. PEOPLE 2	DESCRIPTION 3	SHYU NEW 4	CLASS/DIV 5	NEW QRS 6	FAC NO. 7	NO. PEOPLE 8	DESCRIPTION 9	SHYU NEW 10	CLASS/DIV 11	NEW QRS 12	DIST ACT 13	DIST REQ 14	SEP FACTOR 15	VALUE 16
Bld 123	15 M	Maintenance & Inspection 3 bay (35-23-07)	5,000 lbs total	1.1 bomb (04) 1.2 CBUs	TAC-388 EMS	W1-1, W2-1	12 M	Bld 704, Fire Station, 2 story CMU construction			AFLC-2849 CES	900 ft 720 ft	1250 ft 1250 ft	K40/50	$3.8mil
						W1-2	8 M	Bld 120, RSCA (33-39-03)	425 lbs per bay	1.1 AIM-9	AFRES-419 CAMS	240 ft	310 ft	K18	$ .8mil
Totals:	15 M						20 M								$4.6mil
ACTION NUMBER: AFLC-MAC-Hill 89-W2 SHYU 883074								BASE: Hill AFB, UT							
REFERENCED ACTION: AFLC-Hill 72-E1 REQUESTED EXPIRATION DATE:						31 JAN 93		APPROVED EXPIRATION DATE: 31 JAN 93				COST TO CORRECT: $450K			
Spot 2		Explosives loaded C-141, C-130, and C-5	30,000 lbs	1.1	MAC-63 MAW	W2-2	4 M	Engine Test Cell, open pad			TAC-388 CES	1050 ft	1250 ft	K40/50	$300K
						Totals:	4 M								$300K

AF Form 943, MAR 90 PREVIOUS EDITIONS ARE OBSOLETE

Figure 1. Waiver or Exemption Sample.

SECTION III - MISSION DATA

1. IMPACT ON MISSION IF MISHAP OCCURS OR SITE PLAN IS NOT APPROVED

FOR W1: The fire station would receive minimal damage from blast effects but may receive fragment damage amounting to 5% of the building's value. Personnel injuries can be expected due to glass breakage and building debris. Any munitions in the RSCA should not sympathetically detonate. Personnel will be seriously injured by blast, building collapse, and impact with hard surfaces. The RSCA would be destroyed beyond use.

FOR W2: Severe structural damage can be expected to the fire station. Personnel injuries will result from fragment and glass breakage. Some personnel may suffer hearing loss. At the test cell, minor injuries to personnel can be expected from debris and fragments.

2. COMPENSATORY ACTIONS TAKEN (Unusual control, procedures, etc.) AND PROGRAMMED CONSTRUCTION/ACTIONS TAKEN TO CORRECT VIOLATIONS. RECOMMENDED ACTION FOR HIGHER HEADQUARTERS

W1: A new Maintenance and Inspection (M&I) facility is programmed for FY 91 (SMYU 878032). This new facility is properly sited and will eliminate the need for this waiver. This project is funded and work would begin Oct 90. Operations at the RSCA will be scheduled, as much as can be, so that they will be done at times when the M&I building is unused.

W2: Project SMYU 883074 was approved and is awaiting funding by HQ AFLC. This new hot cargo pad was site planned and approved by the DDESB on 27 Nov 88 under Hill 88-55. Use of the engine test cell is limited to periods when no loading/unloading of explosives cargo is being done at Spot 2.

3. JUSTIFICATION

W1: Mission requirements of the 388 TFW (TAC) and the 419 TFW (AFRES) predicate continuous munitions support. These are the only munitions maintenance facilities capable of supporting their needs. Mission changes and aircraft conversions have made it necessary to increase the explosives weight at the PES.

W2: MAC cargo aircraft and LOGAIR flights transport various munition items in and out of Hill AFB to support testing and special projects. The current HCP is as remote as possible.

SECTION IV - CERTIFICATION

COMMANDER APPROVAL

	PRINTED OR TYPED NAME	SIGNATURE
TENANT UNIT (Where Applicable)		
☒ CONCUR ☐ NON-CONCUR	MICHAEL R. FOX, Colonel, USAF Commander, 388 TFW	Michael R. Fox
WING/BASE		
☒ CONCUR ☐ NON-CONCUR	JAMES R. KIPSKI, Colonel, USAF Commander	James R. Kipski
INTERMEDIATE COMMAND/STATE ADJUTANT GENERAL (ANG only)		
☒ CONCUR ☐ NON-CONCUR	JAMES W. HOPP, Major General, USAF Commander	James W. Hopp
MAJOR COMMAND		
☐ CONCUR ☐ NON-CONCUR	ALFRED G. HANSEN, General, USAF Commander	
AFSC		
☐ CONCUR ☐ NON-CONCUR		

COMMENTS

AF FORM 941, MAR 90 (Reverse)

Figure 1. Continued.

HOW TO COMPLETE AF FORM 943 FOR EXPLOSIVES WAIVERS AND EXEMPTIONS

NOTE: Attachment 4 contains instructions on using AF Form 943 for site plans.

1. General Information. Submit a separate AF Form 943 for each potential explosion site (PES). When this cannot be done, follow these guidelines:

a. Draw a line completely across the form immediately after the last entry.

b. Total all columns as necessary for the currently entered action.

c. Draw another line as in a above.

d. Enter the applicable data for the new action as called for in section I, and enter the data for it in columns 1 through 16.

e. Annotate section III to show data that pertain to each PES.

2. Purpose of This Form. To request authority to depart from the mandatory requirements of explosives safety quantity-distance standards of this regulation. Deviation requests will be submitted by letter. (See example AF Form 943, figure 1, this attachment, for more details on preparing waivers and exemptions.)

3. Section I:

a. Action Number. Assign an action number for each PES. This number will remain unchanged for the duration of the request, including recurring reviews, renewals, and updates. The action number is designed in five parts as follows:

(1) The requesting MAJCOM designation, followed by the tenant MAJCOM designation where needed to show the waiver or exemption cause is a tenant PES (host and tenant, such as: AFLC-TAC).

(2) The base or location where the PES located (for example, Hill AFB, Logan IAP, etc.).

(3) Calendar year designation, based on the date the original request is (or was) sent by the base (89,99, etc.).

(4) An identifier for the type of request, followed by a sequence number. Use W for waiver and E for an exemption. Number each type of request sequentially for each calendar year. For example, the first waiver for the year would be W1; the first exemption would be E1. Where more than one PES is included in the request, include an identifier for each. For example, W4/W5/W6. Cancelled requests will not affect the numbering of subsequent requests. For example, if waiver AFLC-TAC-HILL AFB 89-W1 and AAC-BOSH AFB 91-E2 are cancelled, the next waiver submitted for Hill AFB in 1989 would be 89-W2. Likewise, the third exemption submitted for BOSH AFB in 1991 would be 91-E3.

(5) Programming, design and construction (PDC) element. List only if construction is planned to eliminate the waiver or exemption. This element will be provided by the base civil engineering function (for example, SMYU878032).

b. Base. Give the location of the situation requiring the action. If other than a military base, list civilian or commercial address.

c. Referenced Action. Give the previous waiver or exemption number if this request is to replace or change a previous request. List the approved site plan number that authorized the operation. If not available, explain this in the cover letter.

d. Requested Expiration Date. Enter this date based on scheduled or contemplated completion dates of compensatory actions required to alleviate waived conditions. For example, a request is made for a 4-year waiver in July 1989, the requested expiration date is 31 July 1993. If the request is for a permanent exemption, mark as such.

e. Approved Expiration Date. This date is assigned by the approval authority based on a determination of circumstances and mission needs. In the example above, if the approval official agreed with the requested expiration date, then the approved expiration date would be 31 July 1993.

f. Cost To Correct. This is the total dollar amount to completely eliminate all violations. If not expressed in dollars, show currency used and conversion rate.

4. Section II--Facility Operation. Use this section to describe the facility or operation which is causing the waiver or exemption situation (PES). Use the cover letter or other documentation to further describe the general aspects of the request.

a. Column 1. Identify the facility or operation by its assigned number or other identifier (Bldg 123, aircraft spot 2, bomb build-up pad 2).

b. Column 2. Optional. See instructions for column 8.

c. Column 3. Briefly describe the type of building or structure where the explosives are located. For example, butler building, RSCA, open pad, igloo, 3rd generation HAS, or Korean Flow Thru. If more space is needed, use the submission letter. Show definitive drawing numbers when available. Quantity-distance separation factor will be shown in column 15. For runways and taxiways, show classification (i.e., joint use or military).

d. Column 4. Show the actual NEW in pounds computed according to chapter 5. This weight must agree with other waiver, exemption, or sitings where the facility was involved. For a multiple bay or room facility, state if limit is for all rooms combined or for individual bays.

e. Column 5. Show the class and division of the munitions at the facility. For example, 1.1 bombs or (08) 1.2 projectiles. List separately for each room or bay as applicable. This listing may be included as an attachment to the request.

f. Column 6. Enter the MAJCOM and unit designation of the agency occupying the facility (for example TAC-388EMS).

5. Section II--Potential Explosion Site (PES)/Exposed Site (ES). Use this section to describe the facility or operation exposed by the PES (columns 1 through 6). If there is insufficient room to do so here, continue the description in the cover letter, or by separate attachment. Where available, definitive drawing numbers should be used. Show all exposures within the clear zone of the PES that do not meet the required Q-D. The requester, by listing only exposures that do not meet Q-D standards, certifies that those not listed meet the standards.

a. Column 7. Facility Number. Each ES that must be shown will be identified by this number, consisting of two parts, separated by a hyphen.

(1) The PES type sequence number from the Action Number section above (such as W2, E1, etc.).

(2) A sequence subnumber for each ES. For example, if the PES is W2 and there are three exposed sites which do not meet Q-D, they would be identified as W2-1, W2-2, and W2-3. The deletion of previously identified ESs does not affect the assigned identification numbers of other ESs shown. For example, if exemption E2 had three violations, numbered 1 through 3, and violations 1 and 2 were corrected and cancelled, then exemption E2 would have only one violation, identified by its original subnumber 3, that is E2-3.

(3) Where an AF Form 943 is used for more than one PES, and the ES falls within the clear zone of or violates Q-D from more than one PES, include a subnumber for each PES. For example, if the request covers three explosives cargo aircraft loading spots, W1, W2, and W3, and the fire station is the first ES for W1 and W2 and the second ES listed for W3, the subnumber for the fire station would be W1-1, W2-1, and W3-2.

b. Column 8. Enter the maximum number of personnel expected at the ES. If the ES is a place of periodic assembly, enter the number normally assembled. More than one entry in this column may be needed. Personnel will be identified with prefix as follows: "M" for military and civil service or supporting contractor technical representatives functioning for the military; "D/C" for dependents and civilians not shown as "M." Total the number of personnel at the bottom of the column. Estimates are acceptable.

c. Column 9. Give the same type of information as called for in column 3.

d. Column 10. Note: Intermagazine Q-D cannot be waived or exempted. See paragraph 5-3d. Leave blank for nonexplosives operating facilities. For explosives locations, show same type of information called for in column 4.

e. Column 11. Give the same type of information as called for in column 5.

f. Column 12. List the same type of information as given in column 6. If personnel are assigned to unit other than the organization owning the PES, ensure coordination is accomplished according to paragraph 11-8.

g. Column 13. Show the distance from the facility (PES) listed in column 1 to the exposure (ES) listed in column 7. Show this distance in feet or other standard reference such as meters. The measurement should match that used on scaled maps accompanying the request.

h. Column 14. Enter the separation required between the PES (column 1) and the ES (column 7), measured as outlined in paragraph 5-10. The required distance will be computed based on the proper K-factor as listed in column 15 or the minimum fragment distance required in chapter 5.

i. Column 15. Enter K-factor used to compute required separation shown in column 14. If a K-factor is not proper, show the required separation criteria; include AFR 127-100 paragraph reference, etc.

j. Column 16. Enter the current dollar value of the ES. Estimates will suffice. If current dollar value is not used, specify costing method. Total the dollar value of all ESs at the bottom of the column.

6. Section III. For waivers and exemptions requiring Secretary of the Air Force (SAF) approval, see attachment 7 for an example of an additional cover letter that the MAJCOM must prepare to send the waiver or exemption for approval.

a. Item 1. Indicate the effect an explosion or fire (maximum credible event) at the PES would have on the unit mission, or other supported agencies. Also describe the effect if the requested action is not approved. Carefully consider fragment and blast damage radii. Use chapter 5, section E, to estimate damage. The following are examples of expected losses: aircraft, moderate damage; 10 percent of aircraft maintenance facilities; 100 percent of POL facilities; and time periods related to recovery. For example, 100 percent loss 2 days, 20 percent loss 5 additional days. Estimates are acceptable.

b. Item 2. Describe any corrective actions and compensatory precautions and controls that will be used to achieve safety during operations when the request is approved.

(1) State whether corrective action can or cannot be done locally with available funds or other resources. If no construction or corrective actions are shown, explain why. Show planned or programmed (funded and unfunded) actions to eliminate violations. This may include recommended actions to be taken by higher headquarters in approving projects, assigning priorities, funding revisions to standard facilities, etc. If local projects have been initiated that involve funding, show the following:

(a) Construction priority assigned.

(b) Category code of project.

(c) Military Construction Program (MCP) item number.

(d) Fiscal year during which construction will occur.

(e) Whether or not a site plan, as described in chapter 8, has been sent to higher headquarters. Where higher-headquarters action has been recommended, proper levels will comment about action taken or contemplated, showing projected completion dates, implementing projects assigned, etc. Put these comments under "remarks" on the form. If off-base violations apply, include actions being taken to negotiate easements.

(2) Include any operational controls necessary. For example, an operating location will only be used after a nearby inhabited building not meeting Q-D is vacated.

c. Item 3. Give the reason for the request.

7. Section IV. Modify the signature blocks or add an additional signature page if an activity requires a different action routing or more signature blocks. Signature by the wing or base commander shows that the request is needed for the mission. The approving authority is certifying the risks involved are acceptable for strategic or compelling reasons.

8. Comments. Give reasons for disapproval or special conditions of approval. Identify comments by office symbol. Add any additional precautions, controls, or actions to be taken by the intermediate command or installation to limit risks.

SAMPLE LETTER--SECRETARY OF THE AIR FORCE QUANTITY-DISTANCE EXEMPTION REQUEST

DEPARTMENT OF THE AIR FORCE
HEADQUARTERS AIRCRAFT OPERATING COMMAND (AOC)
ANYWHERE AIR FORCE BASE XT 12345-6789

25 December 1989

REPLY TO
ATTN OF: CC
SUBJECT: Secretary of The Air Force (SAF) Exemption, My AFB, State (Country) 89-E1 THRU E6, Inhabited Building Distance to Civilian Off-base Dwellings
TO: AFISC/CC

1. The subject request has been evaluated at this Headquarters by the appropriate staff agencies and I have concluded that all reasonable and prudent actions have been taken and the siting described below is the best possible alternative. For this reason, we ask your assistance in obtaining SAF approval for the proposed construction (existing siting). The following information describes our efforts to comply with the appropriate quantity-distance (Q-D) standards, and provides justification for our request for these exemptions.

a. Cause. Headquarters AOC has determined that in the event of hostilities, it will be necessary to deploy an additional wing of B-5 aircraft to My AFB, State (Country). This action was taken due to the unique location of this base in close proximity to expected hostilities. This action dictates the beddown of munitions and related assets, including maintenance facilities, beyond the ability of this base to absorb and meet Air Force and DOD Q-D standards. In addition to deployment for actual hostilities, exercise deployment will be conducted two to three times each year for periods of 2 to 4 weeks each deployment.

b. Exposures and Required Separations. The deployments are expected to continue for an indefinite period of time. Even when the aircraft are returned to home base, the munitions will remain in storage to support future contingencies. The potential explosive sites (PESs) include two aircraft parking locations and four munitions storage igloos. The exposed sites (ESs) include one apartment building and three individual homes. A description of the PESs, ESs, and actual separation distances are detailed in the attached exemption requests from the 987th Tactical Fighter Wing Commander. AFR 127-100, Explosive Safety Standards, requires that civilian dwellings must be provided protection to a level not exceeding 1 psi overpressure, with a minimum distance of 1250 feet for fragment protection from our explosive stocks. The igloos are sited for 120,000 to 250,000 pounds of 1.1 (high explosive) munitions; this requires a separation distance of 2565 to 3150 feet. The nearest building is located at only 1900 feet. The aircraft parking locations are sited for 1237 pounds of explosives, requiring a minimum of 1250 feet separation. The nearest exposure is 973 feet from the aircraft.

c. Effects. The apartment is of wood frame construction with stucco facings. It is expected to sustain major damage approaching 30 percent destruction in case of an accident at the worst exposure (igloo 862). Occupants of the building are expected to suffer temporary to permanent-partial hearing loss. Some will experience bodily injuries from direct blast effects and building debris. Injuries are expected to require some hospitalization, but no fatalities are expected. The homes are constructed of cement block. The house with the worst exposure (to aircraft parking location C-1) would suffer minor damage to the structure with considerable glass breakage. People in the open would be exposed to hazardous fragments which could be fatal.

d. Damage Reduction Efforts. We have reduced individual magazines to minimum loadings consistent with our mission requirements. The magazine causing the greatest exposure (Igloo 862) will be given priority consideration for further reductions. We have implemented the "bulk storage" concept to the maximum degree possible, and have rewarehoused munitions away from the exposed sites. Increased emphasis will be placed on safety and quality control inspections along with more frequent fire drills and exercises. Operating instructions have been written covering all operations. Explosive limits at the aircraft parking locations are for a single worst case load and excess munitions will not be positioned at these locations. Additionally, we will load at aircraft locations that have no violations as much as practical.

2. Options:

a. Deploy the aircraft to another location. As stated above, this is the optimum location for the mission, and to reassign it may jeopardize US strategic interests and bilateral defense agreements.

b. Reduce the munitions stockpile. My AFB is isolated and not easily supported via the logistics supply network on short notice. The mission of the wing could be seriously compromised if the munitions, in the types and quantities required, are not prepositioned.

c. Build more storage structures and reduce individual igloo loadings. Building more igloos would reduce the loadings on the igloo involved, but would target additional off-base dwellings and cause even more exposures.

d. Purchase the exposed structures and relocate the families. This is not advisable because the Air Force does not have the authority and host nation officials will not support the effort. We will continue to work this approach as we have for the past several years. It is an agenda item for the upcoming negotiations involving our Status of Forces Agreement. At this point it does not look very promising, and the OPlan implementation date is rapidly approaching.

3. Our mission tasking is absolutely essential and the munitions must be propositioned in order to ensure success of this effort. We have exhausted all options in our efforts to meet explosives safety standards at My Base, and Secretary of the Air Force approval of these exemptions is required to proceed.

1 Atch

Exemption Request

MAJCOM Commander

SUBJECT INDEX

		Paragraph
[A]	Aboveground magazines, multicubicle	4-16a
	Aboveground magazines, storage of rockets	4-15
	Acceptance of risk	1-9
	Air conditioning equipment, construction	8-33
	Air transport of explosives	7-23
	Aircraft, combat, damage effects	5-31
	Aircraft, grounding	6-20
	Aircraft, explosives-loaded, maintenance	2-22
	Aircraft, loading/unloading, toxic chemical ammunition	9-11
	Aircraft, runways, taxiways, parking areas, and alert facilities, separation	5-24
	Aircraft shelters, hardened	5-21
	Aircraft, specific separation criteria	12-7
	Airfield and heliport explosives-prohibited areas	5-24b
	Air launched cruise missiles	4-12e
	Aisles, maintaining in storage locations	4-5b
	Alarms, fire	3-5
	Ammonium chlorate	10-16a
	Ammonium nitrate	10-19b
	Ammonium perchlorate	10-17b
	Angled storage of munitions in HAS	12-10
	Annealing, manufacturing	10-14f
	Approach zones, separation from explosives	5-24b
	Approval authority for waivers, deviations and exemptions	11-6
	Approved equipment, electrical	6-2b
	Approved lightning protection systems	6-16
	Arrestors, spark	7-17g(2)
	Assembling, pyrotechnics	10-15e
	Assembly operations in storage locations	4-7i
	Assistance agreements, fire department	3-11
	Austere areas	5-22
	Automatic deluge systems	8-42
	Automatic sprinkler systems	8-41
	Auxiliary firefighting equipment	3-7
[B]	Barium chlorate	10-16c
	Barricaded magazines	5-13g
	Barricades	5-13
	Barricades, artificial	5-13d
	Barricades, inspection	5-13e
	Barricades, natural	5-13c
	Barricades, siting	5-13f
	Base boundary or easement, required separation	5-3a
	Base defense support munitions	4-13
	Battery-powered materials handling equipment	7-18
	Battery-powered equipment, storage of	7-17j
	Biological research material, handling, transportation, and storage	9-17
	Blast and fragment confinement facilities, R&D operations	10-27
	Blast doors	8-18
	Blocking and bracing railcars for shipment	7-22i
	Block and extrusions	10-9
	Boilers, construction	8-32

Boundaries, separation from explosives locations 5-3a
Buffered storage concept 12-9
Building and construction for manufacturing and loading of explosives 10-2
Building exits, construction and location 8-19
Building maintenance and repair 8-43
Buildings, construction 8-12
Buildings, electrical service 6-5
Burial sites for explosives 8-47
Burning of vegetation, separation criteria 3-6d
[C] Calcium carbide 10-24
Cancellation of waivers, deviations, and exemptions 11-5
Car seals, changing 7-22o
Carbon monoxide in igloos 7-17k
Carpet rolling and slitting, manufacturing 10-14g
Castable propellants 10-6
Castellating, mixing, and drilling, manufacturing 10-14i
Casting propellant, manufacturing 10-8
Cellular magazines 4-16
Chains, safety 7-17i
Charcoal 10-21
Chemical agents, firefighting 3-17
Chemical agents, storage 4-14
Chemical ammunition, decontamination 9-6
Chemical ammunition, disposal of damaged or leaking munitions 9-13
Chemical ammunition, filling 9-16
Chemical ammunition, personnel protective equipment 9-5
Chemical ammunition, unpackaging and preparation 9-9
Chemical ammunition, safety control and surveillance 9-4
Chemical hazard symbols 3-13b
Chlorates 10-16
Chutes, safety 8-21
Class I, II, and III hazardous locations 6-2a
Class/division 1.1, description ..... 5-5a(1)
Class/division 1.1 risk assessment 5-29
Class/division 1.2, description ..... 5-5a(2)
Class/division 1.3, description ..... 5-5a(3)
Class/division 1.4, description ..... 5-5a(4)
Class 6, division 1 chemical items 5-5b
Classification yards for railcars 7-22s
Cleaning (housekeeping) 2-12b
Cleaning with flammable liquids 3-6e
Clear zones 8-10
Clear zone reduction or redesignation 8-11
Collection and disposal of hazardous waste material 2-12a
Collection of explosives dusts 8-39
Combat aircraft, damage effects 5-31
Combat aircraft generation related facilities 5-14c
Combustible material, stacking 3-6i
Commander's acceptance of risk 1-9c
Communication lines, separations 6-4
Compatibility, factors which determine grouping 4-17a
Compatibility groups 4-18
Compatibility, intransit 4-17c
Compatibility, mixed storage 4-19
Compatibility, storage 4-17

Compatibility, transportation 7-9
Concurrent operations involving explosives 2-5
Conductive floors and shoes 6-13c
Conflicting directives 1-3
Construction contractors 1-5b
Construction site plans, basic guidance 8-2
Construction worker separations ..... 5-3c(7)
Containers, damaged 4-6a
Containers for chlorates 10-16e
Containers for hazardous waste ..... 2-12a(2)
Containers for perchlorates 10-17c
Containers, shipping 7-10
Contaminated areas, explosives 8-47
Contaminated chemical munition unloading 9-12
Contracting officers 1-5a
Control towers 4-12a
Cords, electrical 6-10
Curing, propellant 10-11
[D] Damage assessment, sample 5-29
Damage effects on combat aircraft 5-31
Damaged containers 4-6a
Damaged or improper shipment 7-13
Dangerously unserviceable explosives ..... 4-6b(1)
Decals, fire symbol 3-13g
Decontamination requirements, chemical 9-6
Defense biological research material, handling, transportation and storage 9-17
Dehumidification and heating of magazines 4-4c
Deluge systems 8-42
Deliberate initiation of explosives 5-1b
Demolition explosives, prepositioned 4-21
Designated smoking areas ..... 2-13a(1)
Determination of quantity-distance 5-11
Determining explosives content of items 5-8a
Determining explosives content of a PES 5-8b
Deviations 11-2
Direct combat aircraft generation related facilities 5-14c
Disassembly of explosives 2-18
Disposal of damaged or leaking chemical munitions 9-13
Disposal ranges 8-44
Disposal sites 8-45a
Distance, measuring 5-10
Dividing wall, substantial 4-16
Dividing wall, substantial, construction 8-17
Document destroyers 4-12g
Doors, blast 8-18
Doors, exit 8-19
Double-base solventless propellants 10-14
Drains and sumps, construction 8-29
Drawings, preparing for waivers, deviations and exemptions 11-12
Drills, fire 3-3
Drills, fire exit 3-4
Drivers, selection 7-14
Drones 4-12e
Drying and annealing, manufacturing 10-14f
Drying, pyrotechnics 10-15b

Dunnage storage 3-6i
Dust, collection of explosives 8-39
[E] Egress systems maintenance shops 4-12d
Electrical cords, flexible 6-10
Electrical equipment, installation 8-37
Electrical equipment, location 6-2
Electrical equipment, repairs 6-3
Electrical motors, location 6-6
Electrical service lines to buildings 6-5
Electrical storms, procedures in event 6-19
Electrical testing of explosives items 6-18
Electromagnetic radiation, hazards to electroexplosive devices 6-21
Emergency exits and fire escapes 8-22
Emergency storage of explosives 5-23
EOD disposal operations/demonstrations 3-12h
EOD disposal range 8-44
EOD tool kit use 2-24
EOD training range 8-46
Equipment, grounding 6-13a
Equipment maintenance and repairs 8-43
Essential resources, location 5-1c
Exemption of lightning protection 6-16a
Exemptions 11-2
Exhaust fans 8-36a
Exit doors 8-19
Exits, construction 8-19
Exits, emergency, and fire escapes 8-22
Exits, location 8-19
Exits, magazine 4-3e
Explosive dust collection 8-39
Explosives contaminated areas 8-47
Explosives content, limitations 5-11b
Explosives content of a PES, determining 5-8b
Explosives content of items, determining 5-8a
Explosives, electrical testing of 6-18
Explosives hazard classification for solid propellant manufacturing and processing 10-5c
Explosives limits 2-5
Explosives loaded aircraft 5-24
Explosives locations, separation 5-2
Explosives mishap prevention program 1-5
Explosives, offbase shipment in vehicles 7-20f
Explosives-prohibited areas, airfields and heliports 5-24b
Explosives recovery and reuse 2-12d
Explosives stocks 4-5
Exposed site, description 5-9
Exposed site, hardening 5-12
Extrusion, manufacturing 10-9
Extrusion pressing, manufacturing 10-14h
[F] Federal regulations for transporting hazardous material 7-2
Fencing and placarding 2-11
Filling chemical ammunition 9-16
Final mixing and wringing, manufacturing 10-14c
Finishing propellants 10-10
Firebreaks 3-6c
Fire alarms 3-5

Fire direction symbol 3-13c
Fire drills 3-3
Fire escapes, construction 8-22
Fire exit drills 3-4
Fire extinguishers 3-7a
Fire extinguishers for vehicles and handling equipment 7-17c
Firefighting, assistance agreements 3-11
Firefighting, auxiliary equipment 3-7
Firefighting, chemical agents 3-17
Firefighting, railheads 3-18
Firefighting, storage of water 3-8
Fire hose 3-9
Fire prevention, requirements 3-6
Fire symbols 3-13a
Fire symbols, posting 3-14
Fire walls, construction 8-15
Fires involving chlorates 10-16g
Fires involving perchlorates 10-17d
Fireworks displays 2-8
Fixed ladders, construction 8-24
Flame or spark-producing devices 2-13a
Flammable liquids for cleaning 3-6e
Flammable liquids, storage 4-3f
Flammable liquids, volatile, in manufacturing 10-23
Flammable material storage 3-6f
Flashlights and lanterns 6-11
Flashlights for use in an explosives area 2-14
Flexible cords 6-10
Flightline transportation, toxic chemical ammunition 9-10
Floors and shoes, conductive 6-13c
Flow through revetments 5-21b
Foreign government, waivers to 11-10
Fragment distance 5-3e
Fragment information in risk assessment 5-28a
Fuel service truck parking 5-25e
Fusible links ..... 4-3b(2)(a)
[G] Gasoline and diesel-powered handling equipment 7-19
Gasoline and diesel-powered equipment refueling 7-17f
Gates, roads, and walks, construction 8-27
General related facilities 5-14a
Generators, portable 6-9
Glossary ..... Atch 12
Grain contouring, propellants 10-10
Grenades, smoke 2-17
Grinding, pyrotechnics 10-15f
Grounding aircraft 6-20
Grounding and static electricity 6-12
Grounding during electrically primed ammunition operations 6-15
Grounding equipment 6-13a
Grounding systems, inspection and test 6-14
Ground launched cruise missiles 4-12e
Guides for controlling incoming explosives shipments 7-12
Gun systems maintenance shops 4-12f
[H] Hand lights 2-14
Handling explosives material with battery-powered equipment 7-18

Handling explosives material with gasoline and diesel-powered equipment 7-19
Handling precautions, explosives 2-9
Handling requirements, chemical 9-7
Handling, transportation, and storage of defense biological research material 9-17
Handloading ..... 4-12h(2)
Hardened aircraft shelters 5-21
Hardening exposed sites 5-12
Hardware, construction 8-30
Hazard classes and divisions 5-5
Hazard classification system 5-4
Hazard classifications for transportation of explosives 7-6
Hazard symbols, posting 3-16
Hazardous locations for electrical equipment 6-2a
Hazards of electromagnetic radiation to electroexplosive devices 6-21
Heating magazines 4-4c
Heat-producing devices 3-6a
Holding yards for railcars 7-22r
Holding yards for vehicles 7-20g
Housekeeping, manufacturing 10-14o
Housekeeping within explosives areas 2-12
Hunting 2-15
Hydrogen peroxide, high strength 10-18a
[I] Igloo magazines, barricaded 5-13g
Igloo, steel arch, earth-covered 4-16b
Igniter insertion, manufacturing 10-12d
Improper shipments 7-13
Improvements to the regulation 1-4
Incendiary equipment 4-12g
Incoming railcars, inspection 7-22p
Inert munitions, storage 4-3g
Inhabited building distance 5-3a
Inhibiting, manufacturing 10-141
Insensitive high explosives ..... 5-5a(5)
Inspection of barricades 5-13e
Inspection of bomb fuse cavities 4-7g
Inspection of class/division 1.4 explosives in magazines 4-7h
Inspection of grounding systems 6-14
Inspection of incoming railcars 7-22p
Inspection of lightning protection systems 6-17
Inspection of outgoing empty railcars 7-22u
Inspection of vehicles 7-20d
Installation of electrical equipment 8-37
Installed system and equipment grounds 6-14
Interchange yards 7-22q
Interior construction, finishes and floors 8-14
Intermagazine distance 5-3d
Interservice explosives facilities 5-20
Intraline distance 5-3c
[J] Jettison of defective or leaking toxic chemical munitions 9-14
Joint use runways, separation ..... 5-3a(4)
[K] K-factors ..... 5-11a(1)
[L] Ladders, fixed, construction 8-24
Language of local written procedures 2-4a
Lanterns and flashlights 6-11

Launch facilities for Minuteman 12-3a
Laundries, construction 8-34
Leaking munitions, chemical, disposal 9-13
Leaking packages in railcars 7-22i
Leaking toxic chemical ammunition, safety requirements 9-15
Leaking toxic chemical munitions, jettison 9-14
License, Explosives Facility, AF Form 2047 ..... 4-10d(3)
Licensing explosives locations 4-10
Lighting, permanent, for magazines 6-8
Lighting, photographic 6-2e
Lighting systems, magazine, portable 6-7
Lightning protection, requirements and exceptions 6-16
Lightning protection systems, testing and inspection 6-17
Lights, hand, use in explosives area 2-14
Lights, red, use of on vehicles 7-20c
Limitation of fire areas 3-10
Limitations, explosives content 5-11b
Limits, personnel and explosives 2-5
Lines, electrical power and communication 6-4
Liquid propellant storage criteria 5-27
Liquids, flammable, for cleaning 3-6e
Liquefied petroleum (LP) gas facilities 5-25g
Liquefied petroleum-fueled vehicles 7-17h
Loading and bracing guidance 7-22i
Loading docks 5-16
Loading railcars 7-22h
Loading/unloading toxic chemical munitions on combat aircraft 9-11
Loading vehicles 7-17e
Local laws for transporting explosives 7-5
Local written procedures 2-4
Location of electrical equipment 6-2
Location of electrical motors 6-6
Locomotives 7-22a
[M] Machining of case-bonded propellant 10-12b
Machining of noncase-bonded propellant 10-12c
Magazine exits 4-3e
Magazine lighting, permanent 6-8
Magazine lighting system, portable 6-7
Magazines as barricaded structures 5-13g
Magazines, cellular 4-16
Magazines, heating in 4-4c
Magazines, keeping locked 4-3e
Magazines, multicubicle 4-16a
Magazines, operations permitted 4-7
Magazines, preferred type for storage of explosives 4-4a
Magazines, repair 4-9
Magazines, separation between storage locations 5-3d
Magazines, temperature control 4-4b
agazines, storage of flammable liquids 4-3f
gazine storage requirements 4-3b
ling explosives 7-7
powerhouses, separation ..... 5-3a(1)
nance and repairs to equipment and buildings 8-43
ance and inspection, hazard class/division 1.4
ves in magazines 4-7h
nce of electrical equipment 6-2d

Simulators, use in training/exercises 2-17
Site plan contents 8-9
Site plan processing 8-8
Site plans, basic guidance 8-2
Site plans, maintaining historical documentation 8-2d
Site plans, submission of 8-2c
Siting barricades 5-13f
Siting of the rocket storage checkout and assembly building 5-15
Skylights and windows, construction 8-28
Small arms ammunition, maintenance in magazines 4-7h
Smoke grenades, use in training/exercises 2-17
Smoking 2-13
Smoking, during transportation 7-17a
Spark and flame arrestors ..... 7-17g(2)
Spark-producing devices ..... 2-13a(2)(c)
Special occupancies, hazardous locations for electrical equipment 6-2c
Special storage configurations 12-1
Special weapons waivers, deviations and exemptions 11-6c
Spotting, railcars 7-22d
Spotting railcars or motor vehicles at operating buildings 5-17
Sprinkler systems, automatic 8-41
Stacking combustible material 3-6i
Stacking in magazines 4-5
Stairways, construction 8-23
Static displays 2-6
Static electricity 6-12
Static grounding 6-13
Steam for processing and heating 8-35
Steel arch, earth-covered igloos 4-16b
Steel bin revetments 5-20b
Stenciling containers in magazines 4-7f
Stocks, explosives 4-5
Storage and disposal of non-DOD-owned explosives 1-7
Storage, basic criteria 4-2
Storage, checkout and assembly building for rockets 5-15
Storage, chemical agents 4-14
Storage, compatibility exceptions for, laboratory 10-33
Storage compatibility, explosives 4-17
Storage compatibility, laboratory and field test 10-33
Storage, damaged containers 4-6
Storage facilities, determining explosives content 5-8b
Storage facilities, ready service 5-21f
Storage in operating buildings and locations 4-5c
Storage in shipping and receiving buildings 7-16
Storage locations, requirements 4-3
Storage magazines 4-4
Storage of battery-powered equipment 7-17j
Storage of chlorates 10-16f
Storage of firearms ..... 4-2c(3)
Storage of rockets and like items, general arrangement 4-15b
Storage of rockets, temperature control 4-15c
Storage of toxic agents and ammunition 4-14a
Storage of vehicles 7-17j
Storage of water for firefighting 3-8
Storage, operations allowed in storage spaces 4-7
Storage, outdoor sites 8-38

Tunnels, construction 8-31
Types of separations 5-3
[U] Unloading contaminated or malfunctioned munitions 9-12
Unpackaged items, storage 4-6a
Unpackaging and preparation of chemical ammunition 9-9
Unserviceable explosives 4-6b
[V] Vegetation, burning 3-6d
Vegetation, control 3-6b
Vegetation control along railroad right-of-way 7-22g
Vehicle and handling equipment safety requirements 7-17
Vehicle bodies 7-20b
Vehicle fire extinguishers 7-17c
Vehicle holding yards 7-20g
Vehicle inspections 7-20d
Vehicle maintenance 7-20h
Vehicle operating requirement 7-20e
Vehicle operations inside structures 7-17k
Vehicle operators 7-14
Vehicle parking areas 5-18
Vehicle placards 7-17b
Vehicle refueling 7-17f
Vehicle transportation of explosives 7-20
Vehicles, parking 3-6g
Vehicles, spotting at operating buildings 5-17
Vehicles, use of red lights 7-20c
Ventilation in buildings 8-3628
Ventilation of stacks 4-5a
Ventilation of storage space ..... 4-3b(2)
Volatile flammable liquids 10-23
[W] Waivers, deviations, exemptions 11-2
Walkways, roads, and gates, construction 8-27
Wall boxes, manufacturing 10-14m
Walls, fire 8-15
Walls, reinforced concrete 8-16
Walls, retaining 8-17e
Walls, substantial dividing 8-17
Waste materials, explosives 2-12a
Water barrels 3-7b
Water flow 8-40
Water transportation 7-24
Water, storage for firefighting 3-8
Weapons storage vaults in HAS 12-11
Weighing raw materials, pyrotechnics 10-15a
Windows and skylights, construction 8-28
Wringing, manufacturing 10-14c
Written standards 2-3
[X] X-ray inspection, manufacturing 10-14k
[Y] Zinc chlorate 10-16d

*U.S. GOVERNMENT PRINTING OFFICE: 1990-260-987:84214

APPENDIX D1-7
TECHNICAL DRAWINGS

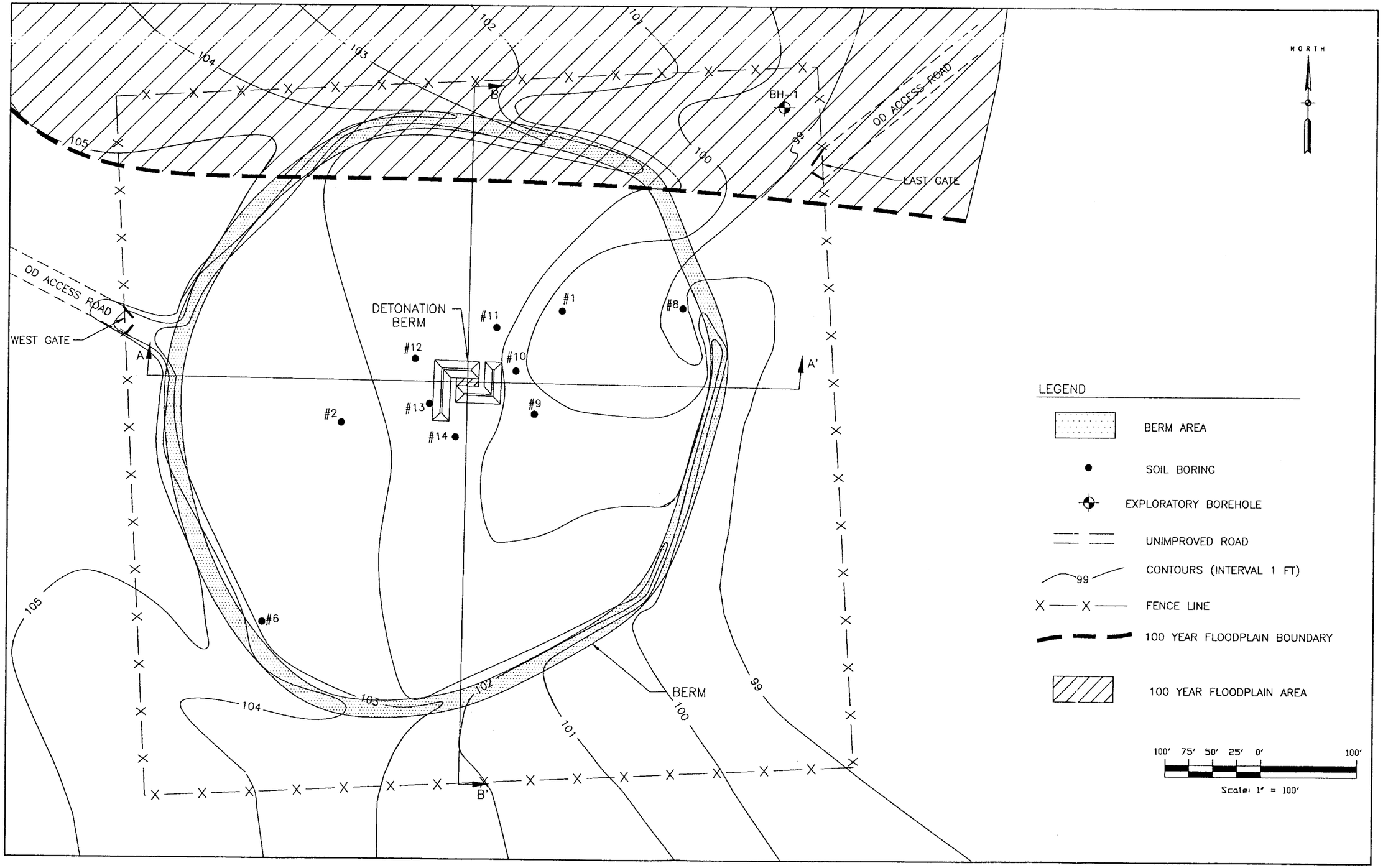

N:\26420512\01\BERMDESN\9-8-93

Figure D1-7a. OD Unit Plan View – Detonation and Outer Berm Cross-Sections

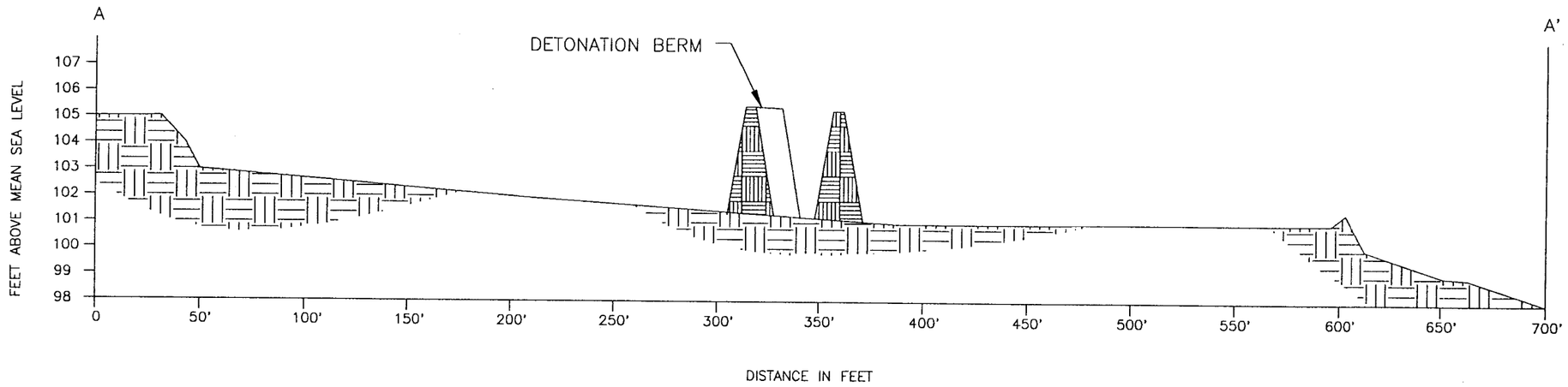

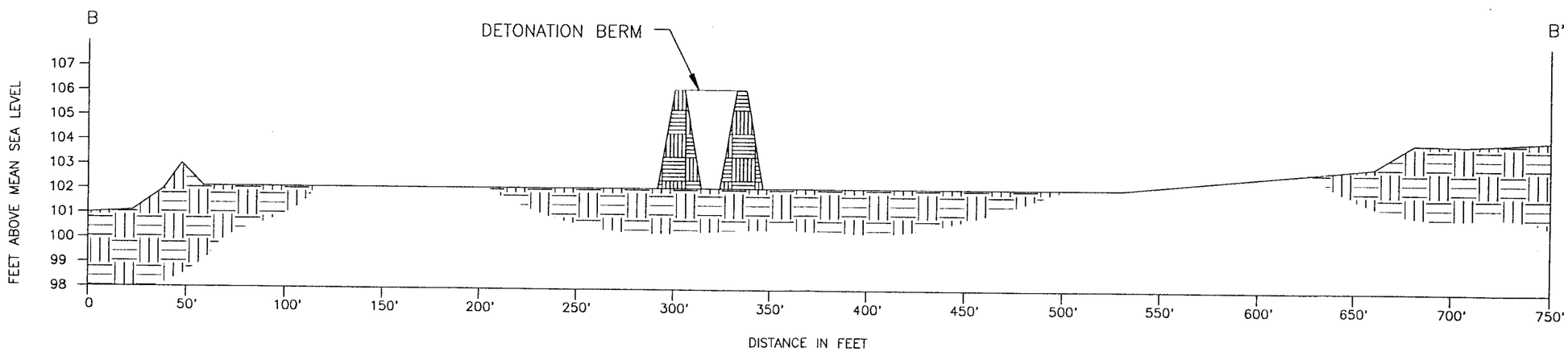

N:\26420512\01\SECTA-A\8-5-93

Figure D1-7b. OD Unit – Detonation and Outer Berm Cross-Sections

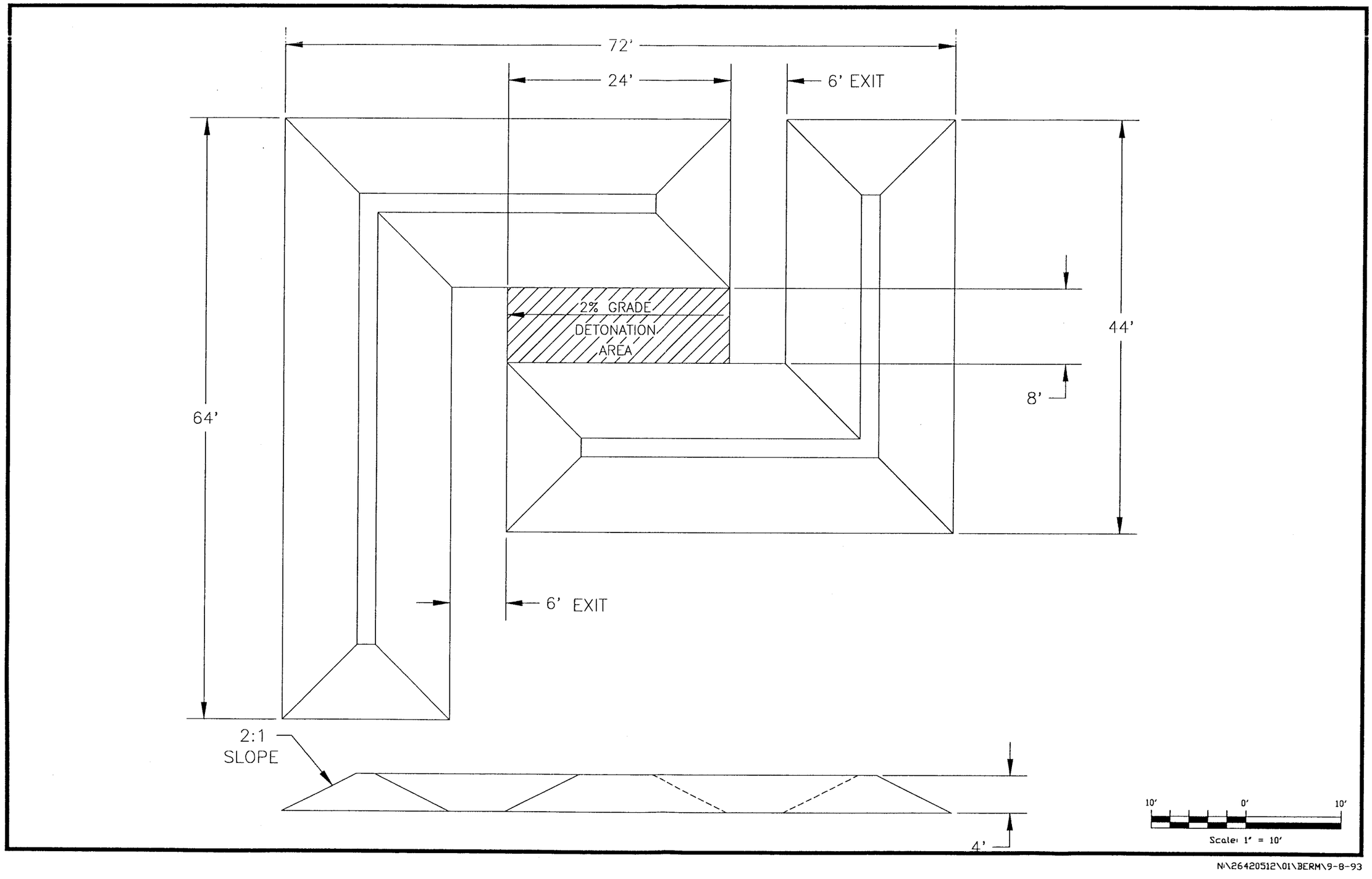

DETONATION BERM DESIGN

Figure D1-7c. OD Unit – Detonation Berm Plan View

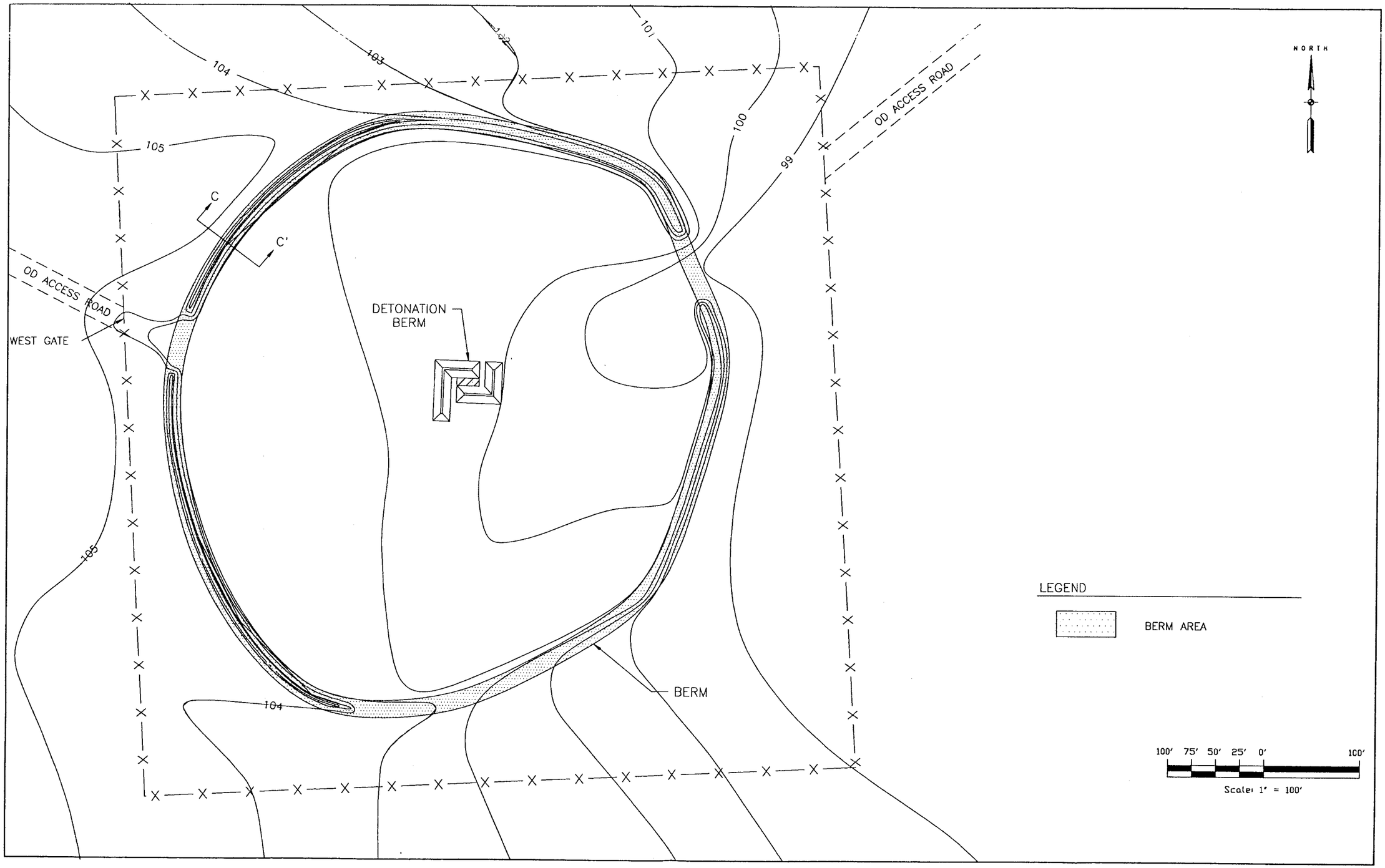

N:\26420512\01\BERMDESN\9-8-93

Figure D1-7d. OD Unit – Plan View
Outer Berm Cross-Section

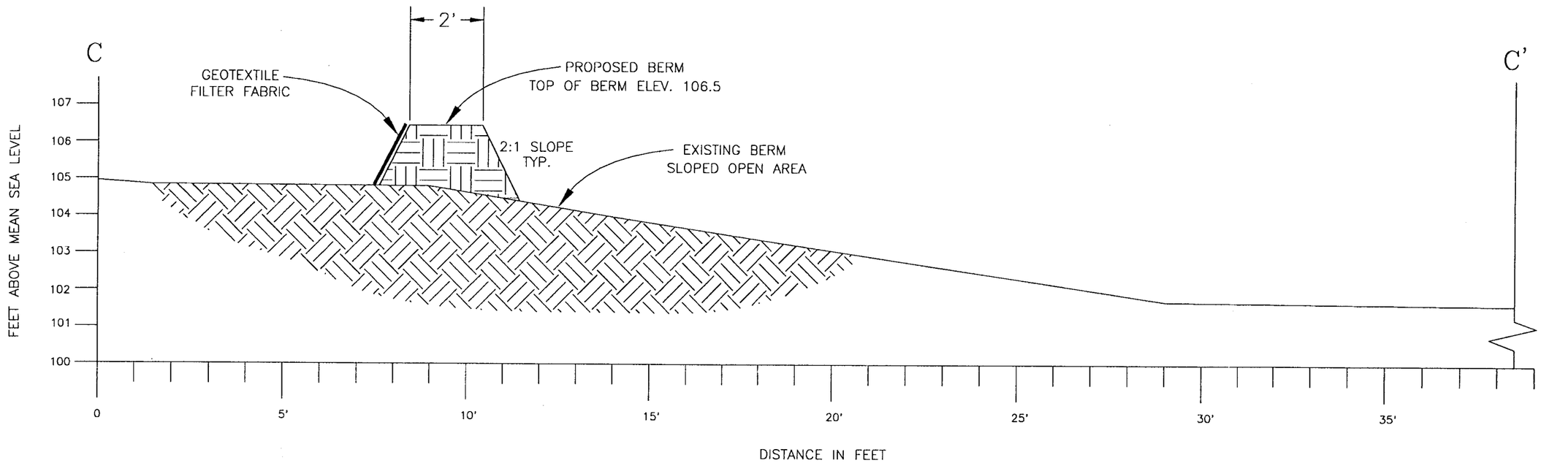

PROPOSED BERM

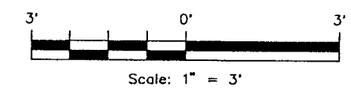

N:\26420512\01\NEWBERM\9-8-93

Figure D1-7e. OD Unit Outer Berm – Construction Cross-Section

SECTION III

METHODS OF DISPOSAL

3-1. GENERAL.

NOTE

- Disposal by burying or dumping in wells, marshes, streams, inland waterways, waste places or pits is not authorized.
- Munitions with compatible characteristics and similar disposal procedures may be disposed of in the same operation.

3-2. Disposal may be accomplished by burning, detonation, static firing or demilitarization. General procedures for each disposal method are included in this section. Specific procedures and additional requirements, if necessary, are listed in Sections VI through IX.

3-3. BURNING.

WARNING

- Burning high explosives when initiators of any description are included will almost certainly result in a detonation.
- In a disposal-by-burning operation, the possibility of a detonation must be considered.
- Mixing of bulk explosives will not be permitted during burning operations.
- Since explosives contain their own oxidizer, burning explosives cannot be extinguished by smothering.

CAUTION

Disposal by open burning will not be undertaken when wind velocity exceeds 24 kph (15 mph).

NOTE

Open burning of munitions may violate state or local air pollution laws. Contact the Base Bio-Environmental Engineer for additional information.

3-4. Disposal by burning may be accomplished on the surface, in a pit, in a trench or in a burning furnace, in accordance with the following paragraphs. Munitions to be burned will be examined carefully to make certain that no removable detonators or blasting caps are included. All removable detonators, blasting caps, etc., will be removed from munitions to be burned to avoid unexpected detonation. Sites will not be left unattended during burning, but will be observed from the specified safety distance.

3-5. SURFACE BURNING. Surface burning is an expeditious method of disposing of munitions such as noninitiating high-explosives and solid propellants. The applicable table in Sections VI through IX will be referred to for information pertaining to disposal of a specific item. Surface burning operations will not be repeated at the same burning site within a 24 hour period. Generally, surface burning procedures are as follows:

NOTE

Items may be removed from containers and stacked or containers may be stacked.

a. Stack items/containers in a pile on the surface.

WARNING

Volatile flammable liquid will not be used to facilitate burning.

NOTE

- Volatile flammable liquid is a liquid whose vapor can be ignited at or below temperatures of 100°F, i.e., ether, acetone, gasoline, ethyl alcohol, methyl alcohol, benzene, toluene, zylene, amyl acetate, napalm and JP-4.

- Motor oil or fuel oil may be poured over the material to assist combustion. Oil may be added either as layers are constructed or after all munitions have been laid. Used motor oil may be used.

b. Pour motor/fuel oil over entire pile, if applicable.

c. Prepare ignition train in accordance with Section IV.

d. Effect ignition in accordance with Section IV.

e. Inspect the pit for unburned or partially burned munitions. Inspection will not be performed until at least 12 hours after the fire has burned out. The inspection will be performed by one qualified person with a second qualified person acting as a safety backup.

3-6. PIT/TRENCH BURNING. Pits or trenches will be utilized if the possibility of propulsion exists or to limit fragmentation if detonation should occur. Pits or trenches will not be reused within a 24 hour period. The applicable table in Sections VI through IX will be referred to for additional information pertaining to disposal of a specific munition. Generally, pit/trench burning procedures are as follows:

a. Dig a pit/trench at least 1.22 meters (four feet) deep with sides sloping enough to prevent cave-in. Size of the pit or length and width of the trench will be determined by the quantity of material being disposed of and by safety distances established for the burning site.

b. Place combustible material, such as scrap wood, in the bottom of the pit at least 0.31 meter (one foot) deep.

c. Place munitions on combustible material, ensuring that the combustible material extends beyond the layer of munitions. Layers of combustible material and munitions will be formed as necessary, allowing an air space of not less than 0.31 meter (one foot) between the top layer of munition and the top of the pit/trench.

WARNING

Volatile flammable liquids will not be used to facilitate burning.

NOTE

Volatile flammable liquid is a liquid whose vapor can be ignited at or below temperatures of 100°F; i.e., ether, acetone, gasoline ethyl alcohol, methyl alcohol, benzene, toluene, xylene, amyl acetate, napalm and JP-4.

NOTE

Plastic sheeting (NSN 8135-00-579-6487 or equivalent) may be used if needed to line the bottom of the burning pit to prevent motor/fuel oil from soaking into the ground too rapidly. Motor oil or fuel oil may be poured over the material to assist combustion. Oil may be added either as layers are constructed or after all munitions have been layed. Used motor oil may be used.

d. Pour motor/fuel oil over entire pile, if applicable.

e. Prepare ignition train in accordance with Section IV.

f. Effect ignition in accordance with Section IV.

g. Inspect the pit for unburned or partially burned munitions. Inspection will not be performed until at least 12 hours after the fire has burned out. The inspection will be performed by one qualified person with a second qualified person acting as a safety backup.

3-7. BURNING FURNACE. A burning furnace (figure 3-1) may be constructed if quantities of munitions to be disposed of warrant a permanent burning site. A furnace is considered a safer, more expeditious method of burning such items as small arms ammunition, delay elements, primer detonator, etc. Location of the burning furnace will be determined by approved site safety distance.

NOTE

- Previously constructed and approved burning furnaces presently in use need not be reconstructed or modified to comply with AF drawings for new furnaces.
- The burning furnace will be constructed in a controlled area, and users will take precautions necessary to ensure against pilferage of munitions residue.

3-8. BURNING FURNACE CONSTRUCTION. Furnaces will be constructed in accordance with official AF drawings. Aperture cards of these drawings may be obtained from OO-ALC/MMWR Hill AFB, UT 84056. Site requirements, other than the furnace itself, are as follows:

a. The barricade shown per item 1, furnace installation, will be built of reinforced concrete. The barricade shown per item 2, furnace installation (AF drawing), will be built of rammed earth or sandbags sloped to prevent slipping. A reinforced concrete barricade is recommended; however, if earth/sand is used, the side facing the furnace will be protected from the intense heat of the furnace by noncombustible material.

b. A loading platform will be provided of sufficient size to allow two men to work and of height necessary to allow loading personnel to load the baffle without danger of dropping items, but low enough to prevent personnel looking into the baffle. Guardrails will be provided.

c. The fuel supply tank and its support will be as shown in figure 3-1.

d. The fuel line from source to furnace may be laid on the ground in lieu of being buried. If this method is used, the one inch pipe will be enclosed in a large diameter pipe or protected by 2 x 4s.

e. The furnace grate, items 7 and 11, and the angle retainer, item 22 (AF drawing), will not be fastened to the furnace assembly. Removal of these items facilitates cleaning the furnace. The angle

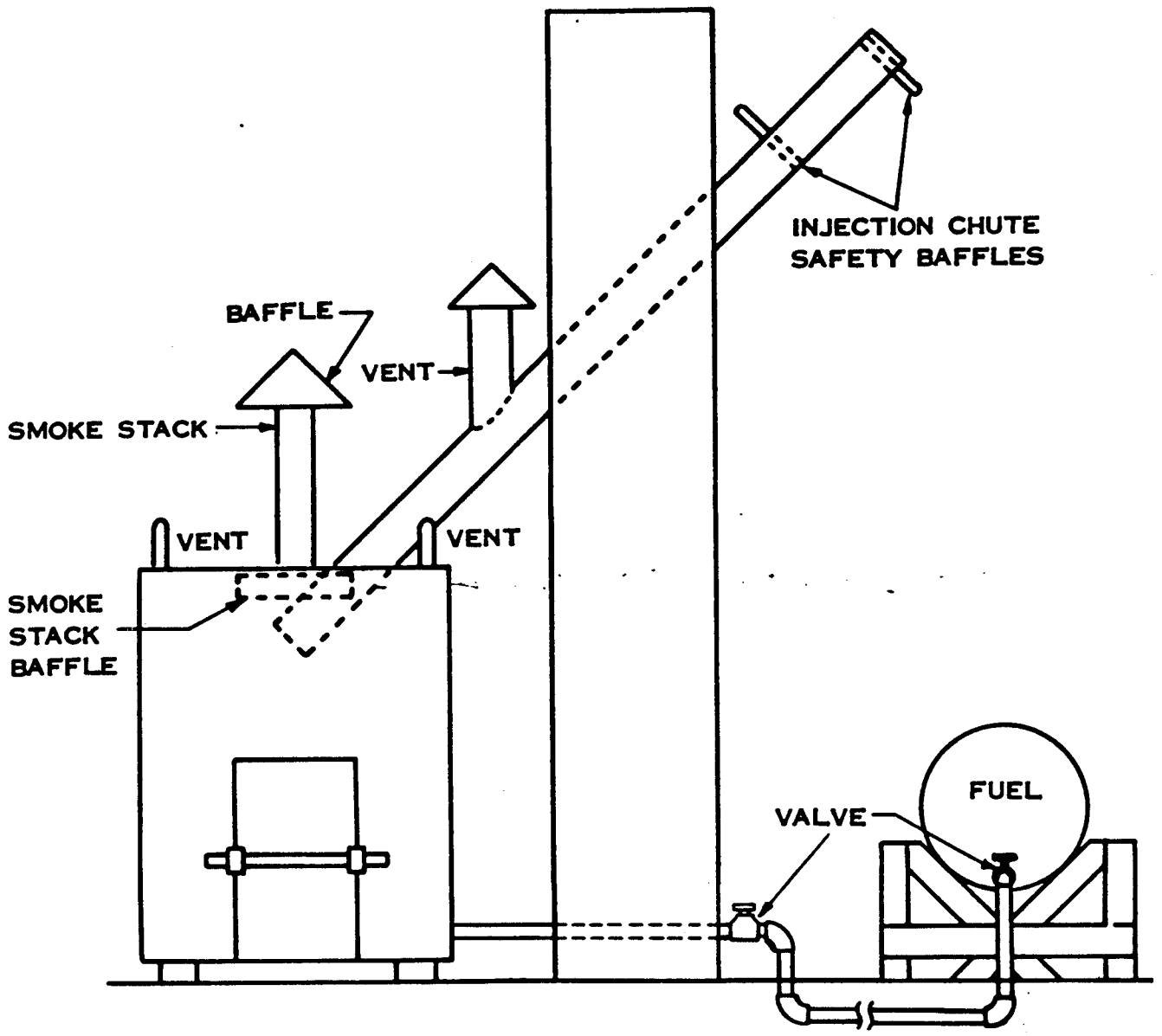

Figure 3-1. Burning Furnace

retainer holds the sand in the bottom of the furnace and closes any gap between the bottom of the furnace and the door.

WARNING

After a disposal operation, furnace will be allowed to cool not less than 12 hours before approaching from any side other than the barricaded side.

3-9. BURNING FURNACE OPERATION. The burning furnace will be operated in accordance with the following procedure.

a. Visually check furnace for cracked welds, excessive warping of door and grate, adequate fuel supply, blocked fuel pipes, etc.

b. Check sand in bottom of furnace to ensure a depth of approximately 5 to 7.6 centimeters (two to three inches).

c. Open fuel valves at both fuel supply and at furnace.

d. Allow sand to become saturated with oil.

e. Turn off fuel supply at furnace.

f. Ignite oil using a burning stick or oil saturated waste.

NOTE

It may be required to ignite oil after door is closed on some model furnaces to prevent possible injury. Ignition may be accomplished through air vents on these models.

NOTE

Jetting will be audible and flame will be burning above the fuel line. Jetting should take palce in approximately 10 minutes.

g. Allow fuel line to jet.

NOTE

Too much oil will cause jetting to discontinue and furnace will produce excess smoke.

h. Turn on the fuel valve at the furnace only enough to maintain jetting.

i. Close door.

j. Allow approximately 30 minutes for furnace to heat completely.

WARNING

- All personnel will withdraw to a safe distance behind the barricade.
- Personnel will not look into the feed chute at any time during the disposal operation or for at least 12 hours after the disposal operation is completed.
- Munitions to be disposed of will be positioned in a safe area behind the barricade.

NOTE

Packing material, boxes, clips, etc. will not be fed into the furnace.

k. Remove all packing material, boxes, clips, etc. from munitions being disposed of.

l. Ensure that bottom baffle is closed and top baffle is open. Check lock handle.

WARNING

- When loading feed chute ensure hands are withdrawn as soon as munitions are placed in chute.
- Personnel loading the feed chute will wear ear, eye, and hand protectors during the disposal operation.

NOTE

It is advisable to load the feed chute with a few items at a time until baffle capacity has been reached. Maximum number of items to be loaded at one time is determined by the size of the item.

m. Load feed chute.

n. Close top baffle.

o. Open lower baffle.

p. Allow sufficient time for all items to function.

q. Repeat steps k. through p. until munitions have been disposed of.

r. Turn off both fuel valves.

s. Observe minimum 12 hour wait period prior to approaching furnace.

WARNING

Any unexploded munitions will be disposed of by EOD.

t. Visually inspect and remove munitions residue.

u. Clean and check furnace.

3-10. DETONATION.

WARNING

- Do not attempt to detonate any item listed in this manual using less than the explosive charge specified in the individual procedures.
- Blasting caps used for initiation of explosive charge will not be buried.
- Do not work with electric blasting caps or other electro-explosive devices while wearing static producing clothing (nylon, silk, synthetic hair, etc.).
- Blasting caps will be carried in approved containers and will be kept out of direct rays of the sun, whenever possible.
- When explosive charges are to be covered with earth or tamped with earth, the charges will be fitted with detonating cord leads that protrude a minimum of 1.8 meters (six feet) through the earth.
- A search of the surrounding area will be made after each operation. Any munition that has been thrown from the pile/pit will be detonated in place by EOD.
- Where operations require the use of a personnel shelter, the shelter will be located not less than 91.5 meters (300 feet) from the disposal site and will afford substantial fragment-proof overhead cover and frontal protection.

NOTE

- The requirement to cover a pit with 0.61 meter (two feet) of earth may be deleted if adequate distance is available so that danger to personnel from fragmentation is not a factor.
- Use of detonating cords, safety fuses and electric or nonelectric blasting caps will be in accordance with Section IV of this manual.

3-11. Disposal by detonation may be accomplished on the surface or in a pit/trench. Procedures vary greatly due to the size of the item, amount and type of explosive contained in the item, amount and type of explosive charge necessary to ensure complete destruction, method of priming etc. Warnings pertaining to specific munitions are contained in Sections VI through IX. Specific procedures are contained in Sections VI through IX.

3-12. A few items are disposed of by a method that combines detonation and burning, wherein the item case is ruptured by an explosive charge and the explosive and/or propellant in the item burned. When applicable, this method is referenced in the table listing the item. The site will not be left unattended during disposal, but will be observed from the specified safety distance.

3-13. STATIC FIRING.

3-14. A few munitions are most conveniently disposed of by static firing. Procedures and additional safety requirements are listed in Section VI through IX.

3-15. DEMILITARIZATION.

3-16. Demilitarization is the act of destroying the military offensive or defensive advantages inherent in munitions and prevents further use of the item for its intended purpose. If an item can be most advantageously disposed of by demilitarization, the Ammunition Disposition Report will list specific instructions.

3-17. REPORTS.

3-18. AF Form 191, Ammunition Disposition Report (ADR) will be submitted in accordance with AFM 67-1. After-the-fact ADRs will be submitted if immediate disposal of hazardous munitions has been authorized by local commanders.

3-19. CERTIFICATION OF SCRAP METAL.

3-20. All scrap generated from disposal operations will be inspected and certified in accordance with T.O. 11A-1-60.

3-21. DEACTIVATION FURNACE. (Ammunition Peculiar Equipment 1236.)

3-22. Organizations that control and maintain these Army produced machines and require parts or assistance should contact direct:

Contact direct: AMCCOM Rock Island, IL DRSMC-DSM-MB
Autovon 793-6881 or 793-6275

or for engineering assistance:

Tooele Army Depot, UT
SDSTE-AE
Autovon 790-2911

APPENDIX H
PERSONAL TRAINING

APPENDIX H1-1
SPECIALITY TRAINING STANDARDS PROFICIENCY CHECKLIST
STS-464X0

DEPARTMENT OF THE AIR FORCE
Headquarters, USAF
Washington DC, 20330-5000

STS 464X0
(For AFSCs 46430/50/70)
December 1989

EXPLOSIVE ORDNANCE DISPOSAL SPECIALIST AND EXPLOSIVE ORDNANCE DISPOSAL TECHNICIAN

1. The implementation of this STS for technical training provided by Air Training Command is with the class entering 891211 and graduating 900703.

2. Purpose of this Specialty Training Standard (STS). As prescribed in AFR 8-13, this STS:

a. Lists in column 1 of attachment 1 the most common tasks, knowledge, and technical references (TR) necessary for airmen to perform duties in the 3-, 5-, and 7-skill level AFSC in the Explosive Ordnance Disposal ladder of the Munitions and Weapons career field. These are based on an analysis of the duties in AFR 39-1 effective 1 February 1988.

b. Provides OJT certification columns in attachments 1 to record completion of task and knowledge training requirements. Certification is accomplished as outlined in AFR 50-23.

c. Shows formal training requirements. Column 3A(1) of attachment 1 shows the proficiency to be demonstrated on the job by the graduate as a result of training in courses G5AQN46430-000 (PDS Code 8Z1) and G5ABN46430-001 (PDS Code 9BR) described in AFR 50-5. When two codes are used in column 3A(1), the first code is the established requirement for resident training on the task/knowledge. The second code is the level of training provided in the course due to resource constraints. There is no AFSC-awarding 7-level advanced course or 7-level CDC. Item 30 of this STS is supplementary training taught in course G5AZN46470-001 (PDS Code 6AQ). It is not 7-level AFSC-awarding or 7-level CDC training.

d. Becomes a job qualification standard for on-the-job training when placed in AF Form 623, On-the-Job Training Record, and used according to AFR 50-23. For OJT, the tasks in column 1 are trained and qualified to the go/no go level. Go means the individual can perform the task without assistance and meet local requirements for accuracy, timeliness, and correct use of procedures.

e. Indicates in column 3B(2) career knowledge provided in the 5-skill level CDC. See ECI/AFSC/CDC listing maintained by the unit OJT manager for current CDC listings.

f. Is a guide for development of promotion tests used in the Weighted Airman Promotion System (WAPS). Specialty Knowledge Tests (SKTs) are developed at the USAF Occupational Measurement Center by senior NCOs with extensive practical experience in their career fields. The tests sample knowledge of STS subject matter areas judged by test development team members to be most appropriate for promotion to higher grades. Questions are based on study references listed in AFP 39-8. Individual responsibilities are in Chapter 14 of AFR 35-8.

3. Proficiency Code Key. Attachment 1 contains the proficiency code key used to indicate the level of training and knowledge provided by resident training and career development courses.

4. Recommendations. Report unsatisfactory performance of individual course graduates as prescribed in AFR 50-38. Report inadequacies of this STS through channels to HQ ATC/TTO. Reference specific STS paragraphs.

BY ORDER OF THE SECRETARY OF THE AIR FORCE

OFFICIAL

LARRY D. WELCH, General, USAF
Chief of Staff

WILLIAM O. NATIONS, Colonel, USAF
Director of Information Management
and Administration

1 Atch
Qualitative Requirements

MASTER JQS

Supersedes STS 464X0, October 1987

THIS BLOCK IS FOR IDENTIFICATION PURPOSES ONLY		
NAME OF TRAINEE		
PRINTED NAME (Last, First, Middle Initial)	INITIALS (Written)	SSAN

PRINTED NAME OF CERTIFYING OFFICIAL AND WRITTEN INITIALS	
N/I	N/I
N/I	N/I
N/I	N/I
N/I	N/I
N/I	N/I
N/I	N/I

QUALITATIVE REQUIREMENTS

PROFICIENCY CODE KEY		
	SCALE VALUE	DEFINITION: The individual
TASK PERFORMANCE LEVELS	1	Can do simple parts of the task. Needs to be told or shown how to do most of the task. (EXTREMELY LIMITED)
	2	Can do most parts of the task. Needs help only on hardest parts. (PARTIALLY PROFICIENT)
	3	Can do all parts of the task. Needs only a spot check of completed work. (COMPETENT)
	4	Can do the complete task quickly and accurately. Can tell or show others how to do the task. (HIGHLY PROFICIENT)
*TASK KNOWLEDGE LEVELS	a	Can name parts, tools, and simple facts about the task. (NOMENCLATURE)
	b	Can determine step by step procedures for doing the task. (PROCEDURES)
	c	Can identify why and when the task must be done and why each step is needed. (OPERATING PRINCIPLES)
	d	Can predict, isolate, and resolve problems about the task. (ADVANCED THEORY)
** SUBJECT KNOWLEDGE LEVELS	A	Can identify basic facts and terms about the subject. (FACTS)
	B	Can identify relationship of basic facts and state general principles about the subject. (PRINCIPLES)
	C	Can analyze facts and principles and draw conclusions about the subject. (ANALYSIS)
	D	Can evaluate conditions and make proper decisions about the subject. (EVALUATION)

EXPLANATIONS

- * A task knowledge scale value may be used alone or with a task performance scale value to define a level of knowledge for a specific task. (Examples: b and 1b)
- ** A subject knowledge scale value is used alone to define a level of knowledge for a subject not directly related to any specific task, or for a subject common to several tasks.
- \- This mark is used alone instead of a scale value to show that no proficiency training is provided in the course or CDC.
- X This mark is used alone in course columns to show that training is required but not given due to limitations in resources.

1. TASKS, KNOWLEDGE AND TECHNICAL REFERENCES	2. CERTIFICATION FOR OJT				3. PROFICIENCY CODES USED TO INDICATE TRAINING/INFORMATION PROVIDED					
	A Start Date	B Completion Date	C Certifying Official's Initials	D Trainee's Initials	A 3 Skill Level		B 5 Skill Level		C 7 Skill Level	
					(1) Course	(2) CDC	(1) Course	(2) CDC	(1) Course	(2) CDC
NOTE 1: Users are responsible for annotating training references to identify current references pending STS revision.										
NOTE 2: The 3-skill level training on STS elements 1b(1) through 1b(5) is accomplished in basic military training.										
NOTE 3: Underlined training references are commercial or other service publications that are essential for OJT support or mission accomplishment. Operator's manuals for Polaroid SX-70 and Nikon IV-A cameras are supplied with the cameras or obtainable from the camera manufacturer.										
1. SECURITY										
a. Communications Security (COMSEC) TR: DOD 5200.1R/AFR 205-1; AFR 700 Series; AFR 205-16; AFPs 55-15, 205-11										
(1) Classify information					-			-		
(2) Prevent security violations					b			-		
(3) Use MAJCOM EEFIs					-			-		
(4) Observe security precautions involved in communications					b			-		
b. Operations Security (OPSEC) TR: AFR 55-30										
— (1) Definition of OPSEC					-			-		
— (2) History of OPSEC					-			-		
— (3) Relationship of OPSEC to other security programs such as COMSEC, information security, and physical security					-			-		
— (4) Common OPSEC vulnerabilities					-			-		
— (5) OPSEC significance of unclassified data					-			-		
— (6) Specific OPSEC vulnerabilities of AFSC 464X0					A			-		
c. Security Requirements for EOD Publications TR: DOD 5200.1R/AFR 205-1, AFRs 12-30, 205-32										
(1) Storage requirements					-			B		
(2) Control and access Procedures					-			B		
(3) Destruction and disposition requirements					-			B		
d. Protection of Firearms and Munitions TR: AFRs 125-37, 207-1, 207-4					-			B		
2. AF OCCUPATIONAL SAFETY AND HEALTH (AFOSH) PROGRAM										
a. Hazards of AFSC 464X0										

○ - WORK CENTER TASKS FOR EVERYONE ASSIGNED.

*○ - WORK CENTER TASKS ASSIGNED BY SUPERVISOR.

□ - SUPERVISORY TASKS AND SUPERVISORY TRAINING AS DETERMINED BY THE SUPERVISOR.

— - KNOWLEDGE ONLY TRAINING REQUIRED FOR EVERYONE.

1. TASKS, KNOWLEDGE AND TECHNICAL REFERENCES	2. CERTIFICATION FOR OJT				3. PROFICIENCY CODES USED TO INDICATE TRAINING/INFORMATION PROVIDED					
	A Start Date	B Completion Date	C Certifying Official's Initials	D Trainee's Initials	A 3 Skill Level		B 5 Skill Level		C 7 Skill Level	
					(1) Course	(2) CDC	(1) Course	(2) CDC	(1) Course	(2) CDC
2a(1) Paint and cleaning materials TRs: AFOSH Standards 127-17, 127-43					-			B		
(2) Power equipment TRs: AFOSH Standards 127-12					-			B		
b. AFOSH standards for AFSC 464X0 TR: AFOSH Standards 127-12, 127-17, 127-43					-			A		
c. Use personal protective equipment TR: AFOSH Standard 127-31, 127-32					-			b		
d. Fire prevention TR: AFR 127-100; AFOSH Standard 127-43					-			B		
e. Explosives and missile safety TR: AFR 127-100; TOs 00-25-235, 60A Series					A			B		
f. Nuclear surety TR: AFRs 122-1, 122-2, 122-3, 122-4, 122-5					-			B		
g. Mishap reporting and investigation TR: AFRs 127-2, 127-4, 127-12					-			A		
3. EXLOSIVE ORDNANCE DISPOSAL SPECIALIST AND TECHNICIAN CAREER FIELD TR: AFRs 39-1, 136-8, 136-10, 900-39, TO 60A-1-1-1										
a. Progression in career ladder 464X0					A			B		
b. Duties of AFSCs 46430/50/70					A			B		
4. PARTICIPATE IN USAF GRADUATE EVALUATION PROGRAM TR: AFR 50-38; Assigned MAJCOM EEO Pubs					-			-		
5. EOD UNIT MANAGEMENT TR: AFRs 136-8, 136-10										
a. Organizational structure					A			B		
b. Functions and responsibilities					A			B		
c. Material deficiency Reporting TR: TO 00-35D-54					-			B		
d. Incident response procedures					A			B		
6. SUPERVISION										
a. Orient new personnel TR: AFRs 39-1, 50-23					-			-		
b. Assign personnel to duty positions TR: AFP 50-34					-			-		
c. Plan work assignments and priorities TR: AFRs 39-1, 39-6; AFP 50-34					-			-		
d. Schedule work assignments TR: AFR 39-6; AFP 50-34					-			-		

1. TASKS, KNOWLEDGE AND TECHNICAL REFERENCES	2. CERTIFICATION FOR OJT				3. PROFICIENCY CODES USED TO INDICATE TRAINING/INFORMATION PROVIDED					
	A Start Date	B Completion Date	C Certifying Official's Initials	D Trainee's Initials	A 3 Skill Level		B 5 Skill Level		C 7 Skill Level	
					(1) Course	(2) CDC	(1) Course	(2) CDC	(1) Course	(2) CDC
6e. Establish TR: AFP 50-34										
(1) Work methods					-			-		
(2) Controls					-			-		
(3) Performance standards					-			-		
f. Evaluate work performance of subordinate personnel TR: AFR 39-62; AFP 50-34					-			-		
g. Resolve technical problems of subordinate personnel TR: AFRs 39-1, 39-6					-			-		
h. Counsel personnel and resolve individual problems TR: AFP 50-34					-			-		
i. Initiate action to correct substandard performance by personnel TR: AFRs 35-32, 39-30					-			-		
7. TRAINING TR: AFR 50-23										
a. Evaluate personnel to determine need for training					-			-		
b. Plan and supervise OJT										
(1) Evaluate personnel to determine need for training					-			-		
(2) Conduct training					-			-		
(3) Counsel trainees on their progress					-			-		
(4) Monitor effectiveness of training										
(a) Career knowledge upgrade					-			-		
(b) Job proficiency upgrade					-			-		
(c) Qualification					-			-		
c. Maintain training records					-			-		
d. Evaluate effectiveness of training programs					-			-		
e. Recommend personnel for training TR: AFRs 50-5, 35-1, 39-1, 50-37, 50-39					-			-		
8. BASE RECOVERY AFTER ATTACK (BRAAT) TR: AFR 360-1, TOs 60A-2-1-39, 60A-2-1-59										
a. Concept					-			B		

1. TASKS, KNOWLEDGE AND TECHNICAL REFERENCES	2. CERTIFICATION FOR OJT				3. PROFICIENCY CODES USED TO INDICATE TRAINING/INFORMATION PROVIDED					
	A Start Date	B Completion Date	C Certifying Official's Initials	D Trainee's Initials	A 3 Skill Level		B 5 Skill Level		C 7 Skill Level	
					(1) Course	(2) CDC	(1) Course	(2) CDC	(1) Course	(2) CDC
8b. Responsibilities					-			B		
c. Pre-attack EOD procedures					-			b		
d. Post-attack EOD procedures					-			b		
9. PUBLICATIONS										
a. Administrative Publications TR: AFRs 5-1, 5-31					-			B		
b. Technical Orders TR: AFR 8-2, AFP 8-17, TOs 0-1 Series, 00-5-1, 00-5-2 Series										
(1) Technical Order System					A			B		
(2) Use indexes to locate desired information					2b			b		
(3) Use TOs when performing tasks					2b			b		
(4) Establish and maintain TO files					-			b		
(5) Requisition TOs					-			b		
(6) Initiate TO improvement reports					-			b		
10. APPLIED PRINCIPLES OF PHYSICS TR: TO 60A-1 Series										
a. Properties of matter					B			B		
b. Laws of motion					B			B		
c. Simple machines					B			B		
d. Measurement systems										
(1) English					B			B		
(2) Metric					B			B		
(3) Convert between systems					2b			b		
11. FUNDAMENTALS OF ELECTRICITY TR: AFR 127-100; TOs 11A-1-42, 60A-1 Series										
a. Demolition circuitry										
(1) Series circuits					B			B		
(2) Parallel circuits					B			B		
b. Perform grounding procedures					2b			b		
c. Apply electromagnetic radiation (EMR) precautions					2b			b		
12. TOOLS AND EQUIPMENT										
a. Common hand tools TR: TOs 32-1 Series										

1. TASKS, KNOWLEDGE AND TECHNICAL REFERENCES	2. CERTIFICATION FOR OJT				3. PROFICIENCY CODES USED TO INDICATE TRAINING/INFORMATION PROVIDED					
	A Start Date	B Completion Date	C Certifying Official's Initials	D Trainee's Initials	A 3 Skill Level		B 5 Skill Level		C 7 Skill Level	
					(1) Course	(2) CDC	(1) Course	(2) CDC	(1) Course	(2) CDC
12a(1) Select proper tools					2b			b		
(2) Use tools properly					2b			b		
(3) Maintain hand tools					-			b		
b. EOD Mk-Series tools TR: TOs 60A Series										
(1) Select proper tools					2b			-		
(2) Use tools properly					2b			-		
(3) Maintain tools					2b			-		
c. Specialized tools and equipment TR: TOs 00-20F-2, 11A-1-42, 11A20-15-1, 11H3 Series, 12S10 Series, 14P3 Series, 14S5 Series, 36 Series, 60A Series										
(1) Select proper tools and equipment					2b			b		
(2) Use tools and equipment properly					2b			b		
(3) Maintain tools and equipment					-			b		
(4) Maintain personal retention items					-			-		
13. EXPLOSIVES AND PROPELLANTS TR: TOs 11A-1-46, 11A-1-47, 60A-1-1 Series										
a. Identification and Characteristics					A			B		
b. Effects					A			B		
14. DESTRUCTION OF EXPLOSIVES AND RELATED HAZARDOUS MATERIALS TR: AFR 127-100, TOs 11A-1-42, 60A Series										
a. Transportation					A			B		
b. Prepare firing systems										
(1) Electric					2b			b		
(2) Nonelectric					2b			b		
c. Dispose of munitions and related materials					2b			b		
d. Munitions residue TR: TO 11A-1-60										
(1) Inspection					-			b		
(2) Certify					-			b		
(3) Disposition					-			b		
e. Environmental considerations TR: AFR 19-1					-			A		

1. TASKS, KNOWLEDGE AND TECHNICAL REFERENCES	2. CERTIFICATION FOR OJT				3. PROFICIENCY CODES USED TO INDICATE TRAINING/INFORMATION PROVIDED					
	A Start Date	B Completion Date	C Certifying Official's Initials	D Trainee's Initials	A 3 Skill Level		B 5 Skill Level		C 7 Skill Level	
					(1) Course	(2) CDC	(1) Course	(2) CDC	(1) Course	(2) CDC
15. EXPLOSIVE ORDNANCE RECONNAISSANCE TR: AFR 360-1, AFP 136-7, TOs 60A Series										
a. Recognize terrain changes due to unexploded ordnance					a			b		
b. Locate and mark UXOs										
(1) Surface					2b			b		
(2) Sub-surface					1a			b		
c. Recommend incident categories					-			b		
d. Collect technical intelligence information										
(1) Use photographic equipment TR: Operator manuals					-			b		
(2) Prepare technical intelligence reports					-			-		
16. PROTECTION OF PERSONNEL AND PROPERTY TR: TOs 60A Series										
a. Determine hazard distances					2b			b		
b. Establish safety requirements					1a			b		
c. Construct protective works					a			b		
17. ACCESS AND RECOVERY TR: TOs 60A-1-1-5, 60A-1-1-6										
a. Soil characteristics					A			B		
b. Gain access					1a			b		
c. Tie knots, bends, and hitches					2b			-		
d. Use field rigging and improvised hoisting					1a			b		
18. RENDER SAFE TECHNIQUES TR: TOs 60A Series										
a. Immobilize fuzes					2b			-		
b. Remove fuzes					2b			-		
c. Disable electrical components					2b			-		
d. Disrupt firing trains					2b			-		
e. Use shaped charges and other explosive techniques					2b			-		
19. CASE ATTACK PROCEDURE TR: TO 60A Series										
a. Use SMUD techniques					2b/b			-		

1. TASKS, KNOWLEDGE AND TECHNICAL REFERENCES	2. CERTIFICATION FOR OJT A Start Date	B Completion Date	C Certifying Official's Initials	D Trainee's Initials	3. PROFICIENCY CODES USED TO INDICATE TRAINING/INFORMATION PROVIDED A 3 Skill Level (1) Course	(2) CDC	B 5 Skill Level (1) Course	(2) CDC	C 7 Skill Level (1) Course	(2) CDC
19b. Use thermal (non-explosive) techniques					2b			-		
c. Use shaped charges and other explosive techniques					2b			-		
20. RANGES TR: AFRs 50-46, 87-4, 127-100, 136-10, TOs 11A-1-60, 60A Series										
a. Decontaminate weapons ranges					1a/a			b		
b. Proficiency, training, and demolition ranges										
(1) Establish					-			b		
(2) Maintain					-			b		
21. CHEMICAL AND BIOLOGICAL WARFARE AGENTS, EQUIPMENT, AND PROCEDURES										
a. Agents TR: AFMs 355-4, 355-6; AFR 355-7; TOs 60A Series										
(1) Physical state					A			B		
(2) Physiological action					A			B		
(3) Persistence					A			B		
b. Protective equipment and procedures TR: AFRs 127-100, 355-1, TOs 11C15-1-3, 11D-1 Series, 11H2-5 Series, 14P3 Series, 14P4 Series, 60A Series										
(1) Use protective clothing and equipment					2b			b		
(2) Use detection and identification kits					2b			b		
(3) Apply first aid and self aid procedures TR: AFR 50-20					1a					
(4) Use decontaminants and decontamination equipment					1a			b		
(5) Seal and package leaking munitions					1a			b		
(6) Transport hazardous chemical or biological munitions					1a			b		
(7) Dispose of chemical or biological munitions					1a			b		
22. US AND FOREIGN DROPPED MUNITIONS TR: TOs 60A Series, 60B Series, 60C Series, 60H Series, 60T Series										
a. Bombs and bomb fuzes										
(1) Identify					2b			-		

1. TASKS, KNOWLEDGE AND TECHNICAL REFERENCES	2. CERTIFICATION FOR O/T				3. PROFICIENCY CODES USED TO INDICATE TRAINING/INFORMATION PROVIDED					
	A Start Date	B Completion Date	C Certifying Official's Initials	D Trainee's Initials	A 3 Skill Level		B 5 Skill Level		C 7 Skill Level	
					(1) Course	(2) CDC	(1) Course	(2) CDC	(1) Course	(2) CDC
22a(2) Observe safety precautions					2b			-		
(3) Render safe					2b			-		
(4) Perform disposal procedures					2b			-		
b. Bomb clusters/dispensers and cluster/dispenser fuzes										
(1) Identify					2b			-		
(2) Observe safety precautions					2b			-		
(3) Render safe					2b			-		
(4) Perform disposal procedures					2b			-		
23. US AND FOREIGN PROJECTED MUNITIONS TR: TOs 60A Series, 60D Series, 60E Series, 60F Series, 60M Series, 60T Series										
a. Projectiles and projectile fuzes										
(1) Identify					2b			-		
(2) Observe safety precautions					2b			-		
(3) Render safe					2b			-		
(4) Perform disposal procedures					2b			-		
b. Grenades and grenade fuzes										
(1) Identify					2b			-		
(2) Observe safety precautions					2b			-		
(3) Render safe					2b			-		
(4) Perform disposal procedures					2b			-		
c. Rockets and rocket fuzes										
(1) Identify					2b			-		
(2) Observe safety precautions					2b			-		
(3) Render safe					2b			-		
(4) Perform disposal procedures					2b			-		
24. US AND FOREIGN GUIDED MISSILES TR: TOs 60A Series, 60G Series										
a. Identify					2b			-		
b. Observe safety precautions					2b			-		
c. Render safe					2b			-		
d. Perform disposal procedures					2b			-		

1. TASKS, KNOWLEDGE AND TECHNICAL REFERENCES	2. CERTIFICATION FOR OJT				3. PROFICIENCY CODES USED TO INDICATE TRAINING/INFORMATION PROVIDED					
	A Start Date	B Completion Date	C Certifying Official's Initials	D Trainee's Initials	A 3 Skill Level		B 5 Skill Level		C 7 Skill Level	
					(1) Course	(2) CDC	(1) Course	(2) CDC	(1) Course	(2) CDC
25. US AND FOREIGN PLACED MUNITIONS TR: TOs 60A Series, 60H Series, 60L Series, 60M Series, 60T Series										
a. Landmines and landmine fuzes										
(1) Locate					2b			-		
(2) Identify					2b			-		
(3) Observe safety precautions					2b			-		
(4) Render safe					2b			-		
(5) Perform disposal procedures					2b			-		
b. Booby traps and booby trap fuzes										
(1) Locate					2b			-		
(2) Identify					2b			-		
(3) Observe safety precautions					2b			-		
(4) Render safe					2b			-		
(5) Perform disposal procedures					2b			-		
26. US AND FOREIGN AIRCRAFT TR: TOs 00-105E-9, 60A Series, 60J Series										
a. Aircraft egress systems and system components										
(1) Locate					1a			b		
(2) Identify					1a			b		
(3) Observe safety precautions					2b			b		
(4) Render safe					1a			b		
(5) Perform disposal procedures					1a			b		
b. Aircraft armament systems										
(1) Gun systems										
(a) Locate					1a			b		
(b) Identify					1a			b		
(c) Observe safety precautions					2b			b		
(d) Render safe					1a			b		
(2) Release and launching systems										
(a) Locate					1a			b		
(b) Identify					1a			b		

1. TASKS, KNOWLEDGE AND TECHNICAL REFERENCES	2. CERTIFICATION FOR OJT				3. PROFICIENCY CODES USED TO INDICATE TRAINING/INFORMATION PROVIDED					
	A Start Date	B Completion Date	C Certifying Official's Initials	D Trainee's Initials	A 3 Skill Level		B 5 Skill Level		C 7 Skill Level	
					(1) Course	(2) CDC	(1) Course	(2) CDC	(1) Course	(2) CDC
26b(2)(c) Observe safety precautions					2b			b		
(d) Render safe					1a			b		
c. Miscellaneous aircraft hazards					A			B		
27. US AND FOREIGN PYROTECHNICS TR: TOs 6GA Series, 60K Series, 60M Series										
a. Identify					2b			-		
b. Observe safety precautions					2b			-		
c. Render safe					2b			-		
d. Perform disposal procedures					2b			-		
28. IMPROVISED DEVICES TR: TOs 60A Series, 60L Series, MCM Manual										
a. Locate					2b			-		
b. Gain access					2b			-		
c. Identify					2b			-		
d. Interpret radiographs					2b			-		
e. Observe safety precautions					2b			-		
f. Render safe					2b			-		
g. Perform disposal procedures					2b			-		
29. NUCLEAR WEAPONS, EQUIPMENT, AND PROCEDURES TR: TOs 00-110A-12, 11N Series, 60A Series, 60N Series										
a. Nuclear weapons										
(1) Identify					2b			-		
(2) Hazards										
(a) Explosive					B			-		
(b) Toxic					B			-		
(c) Radiological					B			-		
(3) Observe safety precautions					2b			-		
(4) Fuzing and firing systems					B			-		
(5) Render safe					2b			-		
(6) Package and dispose of components					2b			-		
b. Use protective clothing and equipment TR: TOs 00-110A-12, 60N-60-1, 14P Series, 14S Series					2b			B		

1. TASKS, KNOWLEDGE AND TECHNICAL REFERENCES	2. CERTIFICATION FOR OJT				3. PROFICIENCY CODES USED TO INDICATE TRAINING/INFORMATION PROVIDED					
	A Start Date	B Completion Date	C Certifying Official's Initials	D Trainee's Initials	A 3 Skill Level (1) Course	A 3 Skill Level (2) CDC	B 5 Skill Level (1) Course	B 5 Skill Level (2) CDC	C 7 Skill Level (1) Course	C 7 Skill Level (2) CDC
(29c) Operate radiac instruments TR: TOs 11H4 Series, 11N-T290-2, 60N Series					2b			b		
30. US AND FOREIGN UNDERWATER ORDNANCE TR: TOs 60A Series, 60Q Series, 60R Series, 60S Series										
(a.) Identify					1a			-		
(b.) Observe safety precautions					1a			-		
31. ADVANCED ACCESS AND DISABLEMENT TR: TOs 60A Series, 60L Series										
☆ (a.) Locate					-			-	3c	
☆ (b.) Gain access					-			-	3c	
☆ (c.) Identify					-			-	3c	
☆ (d.) Interpret radiographs					-			-	3c	
☆ (e.) Observe safety precautions					-			-	3c	
☆ (f.) Render safe					-			-	3c	

SUMMARY OF REVISED, DELETED OR ADDED MATERIAL

This STS was revised to incorporate NAVSCOLEOD curriculm changes and recommendations of the 1989 Worldwide EOD Majcom Managers Conference and U&TW. It revises proficiency codes in Base Recovery After Attack, Publications, Tools and Equipment, Explosive Ordnance Reconnaissance, Protection and Property, Access and Recovery, Apply First Aid and Self Aid Procedures, and Protective Clothing and Equipment, paras 8, 9, 12, 15, 16, 17, 21, 29. Separates Locate and mark UXO into surface and sub-surface, para 15. Adds Case Attack Procedures, para 19 and makes additional minor changes throughout.

U.S. Government Printing Office: 1990-260-986/00155

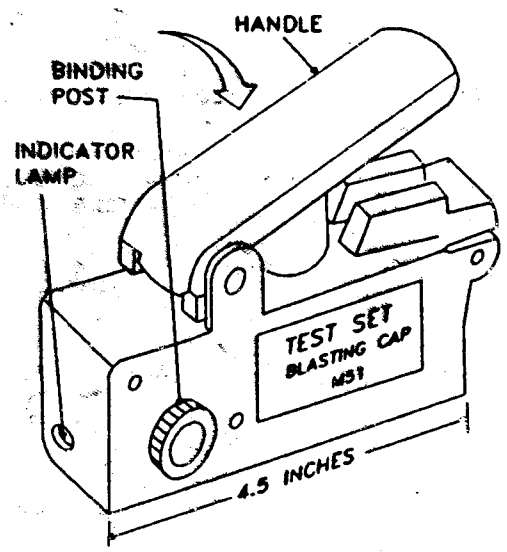

Figure 2-16. M51 Blasting Cap Test Set