Public Service Company of New Mexico

April 26, 1995

Certified Mail,
Return Receipt Requested

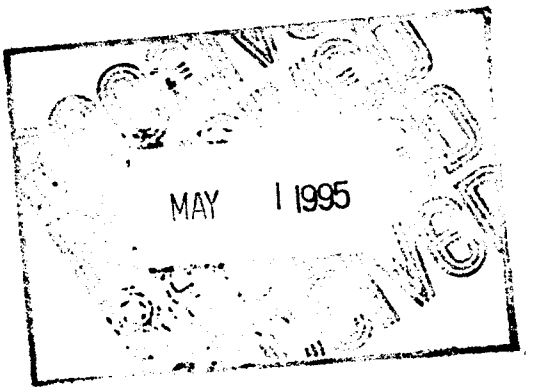

Mr. Benito Garcia
Chief, Hazardous and Radioactive
Materials Bureau
New Mexico Environment Department
525 Camino de Los Marquez
Santa Fe, NM 87502

Dear Mr. Garcia:

Subject: Post-Corrective Measures Implementation Report, Phase I, Person Generating Station Corrective Action Program, NMT 360010342

I certify under penalty of law that this document and all attachments were prepared under my direction or supervision in accordance with a system designed to assure that qualified personnel properly gather and evaluate the information submitted. Based on my inquiry of the person or persons who manage the system, or those persons directly responsible for gathering the information, the information submitted is, to the best of my knowledge and belief, true, accurate, and complete. I am aware that there are significant penalties for submitting false information, including the possibility of fine and imprisonment for knowing violations.

Toni Ristau
Director, Environmental Services

Enclosed please find three (3) copies of the subject report submitted pursuant to requirements contained in the Person Station Corrective Action Directive issued in September 1991. If you have any questions, please contact me at (505) 241-2998.

Ron D. Johnson
Sr. Environmental Scientist

Enclosures not found

RDJ:rdj
enclosures
Phase I- Pumping Test of the Groundwater Pumping System Wells at Person Station
Post Corrective Measures Implementation Report Phase I- Person Generating Station

Alvarado Square
Albuquerque, New Mexico 87158

POST CORRECTIVE MEASURES IMPLEMENTATION REPORT
PHASE I
PERSON GENERATING STATION
ALBUQUERQUE, NEW MEXICO

RCRA Permit: NMT360010342

Prepared For

PUBLIC SERVICE COMPANY OF NEW MEXICO

April 21, 1995

ES ENGINEERING-SCIENCE

PARSONS ENGINEERING SCIENCE, INC.
1700 Broadway, Suite 900 • Denver, Colorado 80290

CONTENTS

Section		Page
1.0	PROJECT OVERVIEW	1
	1.1 Purpose and Organization of Report	1
	1.2 Site Background Information	1
	1.2.1 Operational History	1
	1.2.2 Nature and Extent of Contamination	2
	1.2.3 Existing Soil Contamination	3
	1.2.4 Existing Groundwater Contamination	3
	1.3 Corrective Measures Proposal	4
	1.3.1 Soil Vapor Extraction	4
	1.3.2 Groundwater Pump and Treat	8
2.0	UPDATES TO THE CORRECTIVE MEASURES PROPOSAL	9
	2.1 Significant Design Changes to the CMP	9
	2.1.1 Soil Vapor Extraction	9
	2.1.2 Groundwater Pump and Treat.	9
	2.2 Golf Course Discharge Approval	9
	2.3 Air Discharge Approval	10
	2.4 RCRA Permit Modification	10
3.0	PHASE I TEST RESULTS	11
	3.1 Soil Vapor Extraction Test Results	11
	3.1.1 Soil Gas Permeability	11
	3.1.2 Soil Gas VOC Monitoring	14
	3.1.3 Radius of Influence	14
	3.1.4 Laboratory VOC Analytical Results	18
	3.1.5 VOC Removal Rates	18
	3.1.6 Air Discharge Requirements	18
	3.2 Long Term Soil Vapor Extraction System Effectiveness	18
	3.2.1 Soil Vapor Concentrations	20
	3.2.2 Activated Carbon Treatment	20

CONTENTS (CON'T)

Section		Page
3.3	Groundwater Treatment System Test Results	22
	3.3.1 Pump Test Results	22
	3.3.2 Influent Contaminant Concentrations	24
	3.3.3 Air Stripper/Carbon Efficiency	26
	3.3.4 Monitoring Requirements	27
3.4	Groundwater Treatment System Effectiveness	27
	3.4.1 Aquifer VOC Removal	28
4.0	FUTURE SITE WORK	32
4.1	Phase II Design	32
4.2	Phase II Construction and Operation	32
4.3	Deep Plume Investigation	32
4.4	Schedule	33
BIBLIOGRAPHY		B1

Appendix A	GOLF COURSE DISCHARGE PERMIT
Appendix B	AIR DISCHARGE PERMIT
Appendix C	SVE PILOT TEST FIELD DATA AND CALCULATIONS
Appendix D	SVE PILOT TEST LABORATORY AND ANALYTICAL RESULTS
Appendix E	SOIL CORE ANALYTICAL RESULTS
Appendix F	SITE MAP

SECTION 1

PROJECT OVERVIEW

1.1 PURPOSE AND ORGANIZATION OF REPORT

The objective of this report is to provide an overview of the remediation technologies implemented at Person Station and to assess their effectiveness to date. Significant design changes made to the Corrective Measures Proposal (CMP), dated January 1994, have been included as part of this submittal.

1.2 SITE BACKGROUND INFORMATION

The following site background information was compiled from the Corrective Measures Proposal for the Person Generating Station, Public Service Company of New Mexico (PNM).

1.2.1 Operational History

The Person Generating Station site was operated and maintained by PNM from 1952 to 1986. A site map has been included in Appendix F.

The Person Generating Station site included a maintenance area to support, among other activities, equipment cleaning efforts. The parts wash area included a sump and a below-grade, vertically-placed 3.5' x 10' cylindrical waste oil storage vessel located on the north side of the site to collect wastes generated during equipment cleaning.

Liquid wastes collected in the sump were piped approximately nine feet to the below-grade waste oil vessel. Historical records and interviews with retired personnel indicate that waste oils and greases, kerosene, a water-trisodium phosphate mixture used in steam cleaning, Stoddard Solvent, Dowclene EC, and other solvent mixtures generated during maintenance activities were piped into the vessel for storage (METRIC, 1993). Dowclene EC is a generic solvent with two primary active ingredients: 1,1,1-trichloroethane (1,1,1-TCA) and tetrachloroethene (PCE). Records suggest that major use of the Dowclene EC product began in 1979. Equipment repainting activities conducted in 1980 generated a new type of liquid effluent, including waste paint, paint thinners, and turpentine, that also was collected in the waste oil vessel. Maintenance personnel noted when the vessel was full and arranged for various waste oil reclaimers to remove the contents and recycle the material at other locations.

The vessel was apparently in use from about July 1976 until October 13, 1983, when it was discovered that the vessel lacked an impermeable bottom (i.e., the vessel bottom was

constructed of soil). Upon discovery of this information on October 13, 1983, PNM immediately emptied the vessel and removed it from service. PNM notified the U.S. Environmental Protection Agency (USEPA), the New Mexico Environmental Improvement Division, the predecessor agency to the New Mexico Environment Department (NMED), and the National Response Center of the discovery. PNM arranged for the most highly contaminated source material to be removed from the bottom of the vessel and placed in 55 gallon steel drums in 1983; this drummed material was ultimately transported offsite for disposal as hazardous waste in 1987.

Following removal of the vessel from service, PNM installed a closure cap on the 25' x 35' source area to minimize infiltration. The cap was comprised of a minimum 6 inch thick concrete cap over a minimum 6 inch thick layer of compacted soil over two layers of 80 mil High Density Polyethylene (HDPE) plastic sheeting. The excavated material from the vessel area was replaced with gravel overlain by compacted soil.

In an effort to assess the potential environmental contamination stemming from the use of this waste oil vessel, PNM has conducted two assessment projects. The first assessment, initiated immediately after discovery, was completed in late 1985. Data from this assessment were used to develop the Closure Plan and the existing Post-Closure Care Resource Conservation and Recovery Act (RCRA) permit. The second assessment was conducted pursuant to the Corrective Action Directive (CAD), which was issued by the NMED in September 1991. The second assessment was designed to supplement the environmental monitoring data collected during the first assessment and to re-evaluate the potential extent and impact of groundwater contamination from the source waste oil vessel. A series of new groundwater monitoring wells were installed and sampled between January 29, 1992, and May 17, 1993. The groundwater monitoring wells were installed to delineate both the horizontal and vertical extent of the contaminant plume. Data from this second assessment has been used to further define the probable nature and extent of contamination at the Person Generating Station site (METRIC, 1993).

1.2.2 Nature and Extent of Contamination

As discussed previously, PNM has documented the presence of several volatile organic compounds (VOCs) in the subsurface. The principal contaminants identified during monitoring activities are 1,1,1-TCA, PCE, and 1,1-dichloroethene (DCE). It appears that storage of rinse waters containing the Dowclene PC product, which contained significant concentrations of two of the contaminants of concern (1,1,1-TCA and PCE), in the below-grade waste oil vessel was the primary source of these contaminants. Historical documentation and site personnel interviews suggested that the concentration of these contaminants ultimately pumped to the waste oil vessel may have been significantly decreased since a portion of these VOCs may have volatilized during maintenance operations (METRIC, 1993). Mixing the volatile products with

large volumes of warm steam cleaning waste water may have enhanced the volatilization of contaminants of concern from the liquid waste transferred to the waste oil vessel.

The presence of 1,1-DCE, which is not known to be a component of any of the liquid wastes introduced into the source waste oil vessel, is likely attributable to the transformation of 1,1,1-TCA via hydrolysis. Decreasing levels of 1,1,1-TCA and increasing levels of 1,1-DCE in the groundwater plume supports this transformation.

1.2.3 Existing Soil Contamination

The initial extent of soil contamination at the Person Generating Station site was originally reported in 1984 (Geoscience Consultants, Ltd., 1984). These and other site assessments documented high concentrations of VOCs in the upper 65 feet of the 110 feet thick vadose zone between the previous location of the vessel bottom and the water table. There appears to have been downward migration of the VOCs through the unsaturated zone under the influence of gravity, most likely under unsaturated conditions. Laboratory analysis of soil borehole samples focused on PCE. Sample results show that the bulk of contaminated soil (delineated by soil concentrations of 1 ppm PCE or more) extends downward approximately 70 feet, is approximately 30 feet in diameter, and affects about 60,000 cubic feet of soil.

Soil core sampling conducted during installation of the vapor extraction well/dewatering well (VEW/DW) confirmed the presence of VOCs and C_8-C_{32} hydrocarbons beneath the closure cap in similar concentrations and depth as the 1983 assessment. Laboratory analytical reports for the soil core analysis from installation of the VEW/DW well is contained in Appendix E.

1.2.4 Existing Groundwater Contamination

The horizontal groundwater plume boundary is defined in the Technical Schedule of the CAD as that location where contaminants of concern are at or above the target MCLs for each respective contaminant. The target MCL for 1,1,1-TCA is 60 ppb, 5 ppb for 1,1-DCE, and 5 ppb for PCE, per guidance from both the New Mexico Water Quality Control Commission and the U.S. Environmental Protection Agency. To simplify analysis, the concentration value selected to operationally define the horizontal groundwater plume boundary was 5 ppb for each of the three contaminants of concern (i.e., PCE, 1,1,1-TCA, and 1,1-DCE). Using groundwater monitoring well data to develop plume concentration contour maps for the upper flow zone for each of the contaminants of concern, the total estimated areal extent of the VOC plume is currently 36 acres (METRIC, 1993). PCE and 1,1-DCE plumes extend downgradient to the east about 2400 feet from the source waste oil vessel area. The 1,1,1-TCA plume extends about 1200 feet downgradient from the source waste oil vessel area.

The vertical extent of the VOC groundwater plume is defined as the point at which the volatile contaminant levels are at or below the Method Detection Limits (MDL) values. The MDL level for the contaminants of concern at the Person Generating Station site is 0.2 ppb for Method 8010. Two separate sections can be used to describe vertical plume boundaries for each of the contaminants of concern at this site. The first vertical section is parallel to the axis of the plume; the second section is perpendicular to the axis of the plume. Using this operational definition, data indicate that the contaminants have not migrated beyond the upper flow zone, which is defined as 0 to 20 feet below the water table. Thus, the vertical extent of shallow groundwater contamination under the Person Generating Station site is about 20 feet below the water table. Without the continual addition of water to the waste vessel, no significant mechanism for vertical transport through the vadose zone has existed since 1983.

1.3 CORRECTIVE MEASURES PROPOSAL

The Corrective Measures Proposal Report documented the screening of technologies and the development of a remedial approach appropriate for removing volatile organic compounds in both soil and shallow groundwater. The recommended remedial approach made use of groundwater pumping in conjunction with above-ground treatment of groundwater using air stripping technology, and soil vapor extraction (SVE) for the removal of VOCs from source area soils. A two phase approach was recommended which included an initial phase of pilot testing followed by a final design and full-scale remediation phase based on the pilot testing.

One new vapor extraction well/dewatering well (VEW/DW) was installed within the RCRA cap and one existing monitoring well (PSMW-16) was modified for the Phase I pilot testing. The well as-built diagrams are depicted in Figures 1.1, 1.2, and 1.3.

1.3.1 Soil Vapor Extraction

The Corrective Measures Proposal recommended the following approach and conceptual design for the Phase I SVE treatment system:

- Conduct a 60- to 70-day soil vapor extraction test in the soil contamination source area near the former waste vessel;
- Construct a single 4-inch PVC dual-purpose vapor extraction well/dewatering well through the existing concrete cap with a screened interval from 10 feet below ground surface to approximately 145 feet;
- Install carbon canisters to remove the initial high levels of vapor contamination prior to discharge to the atmosphere;
- Model the impact of VOCs on the ambient air quality;
- Obtain an air discharge permit from Bernalillo County;
- Obtain a RCRA permit modification to construct a well through the RCRA cap; and

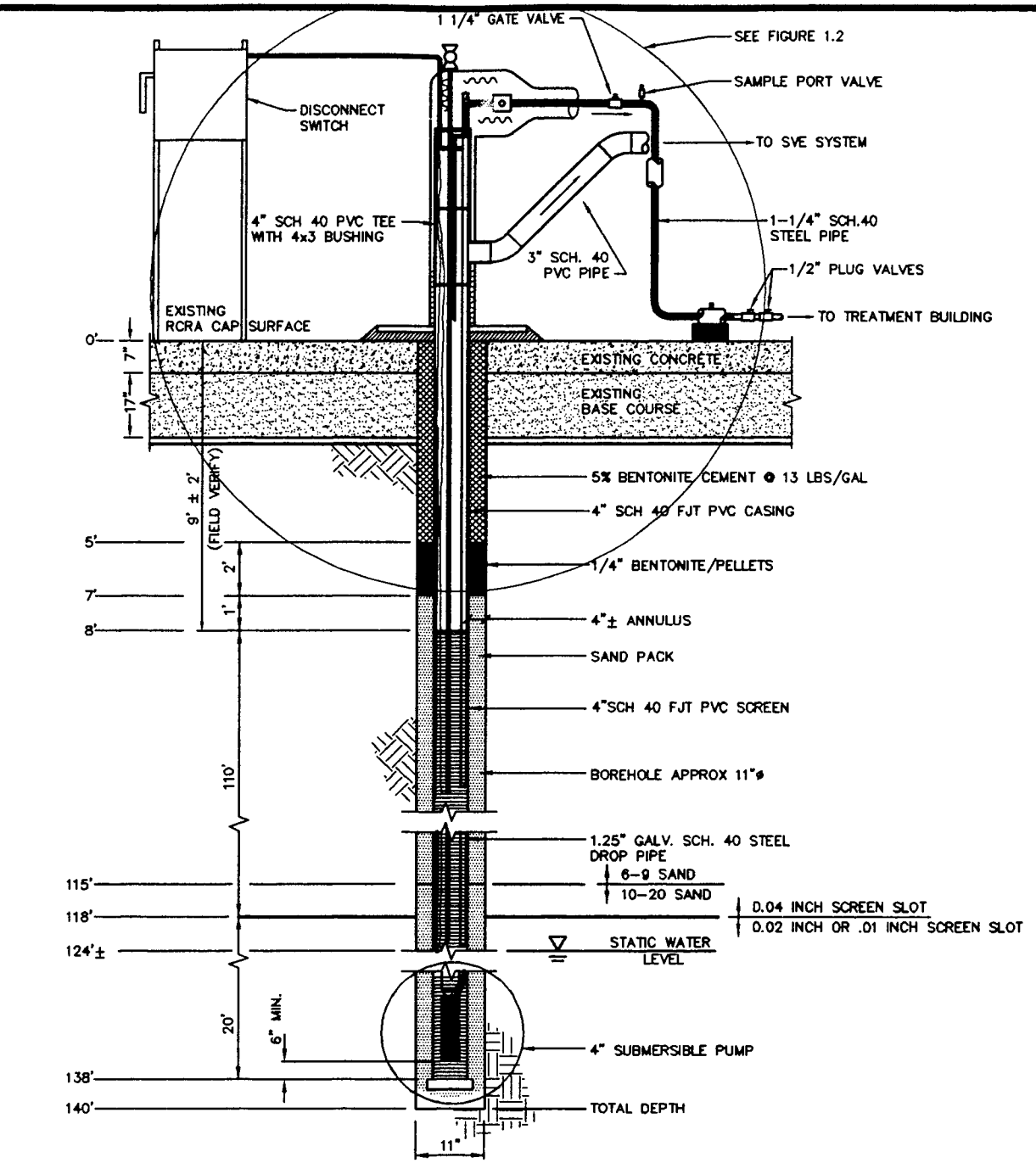

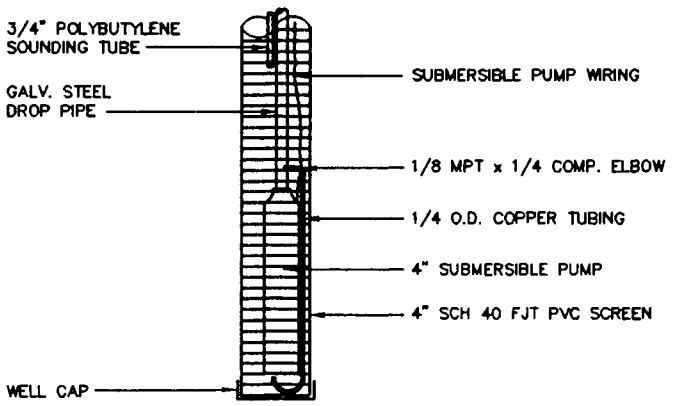

4" SUBMERSIBLE PUMP DETAIL

FIGURE 1.1

VAPOR EXTRACTION/ DEWATERING WELL (VEW/DW) DETAIL

Public Service Company of New Mexico
Person Generating Station
Albuquerque, New Mexico

PARSONS ENGINEERING SCIENCE, INC.
Denver, Colorado

K:\PNM\95DN0671, 04/11/95 at 10:38

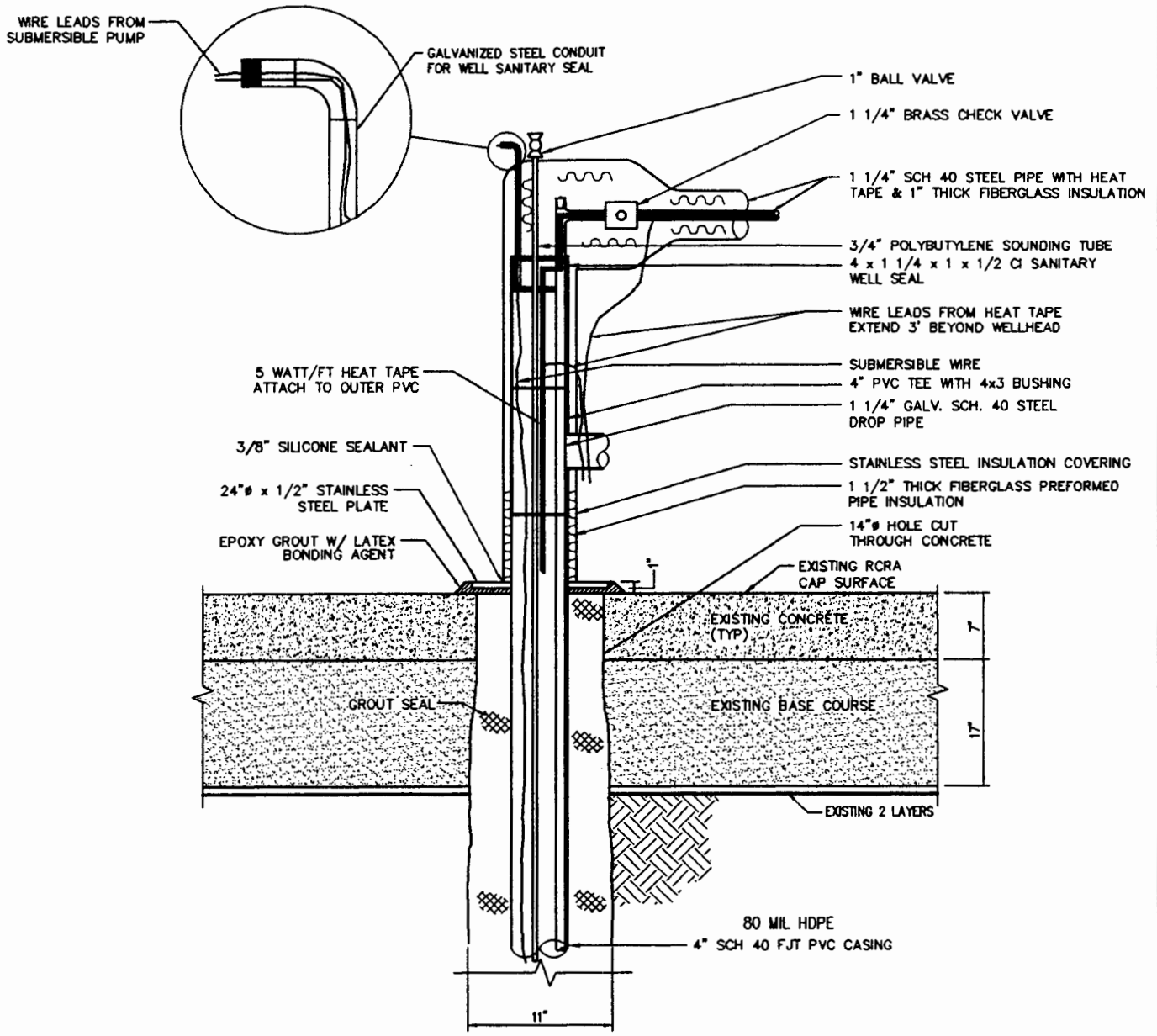

FIGURE 1.2

VEW/DW
WELL HEAD DETAIL

Public Service Company of New Mexico
Person Generating Station
Albuquerque, New Mexico

PARSONS ENGINEERING SCIENCE, INC.
Denver, Colorado

K:\PNM\95DN0671, 04/11/95 at 10:28

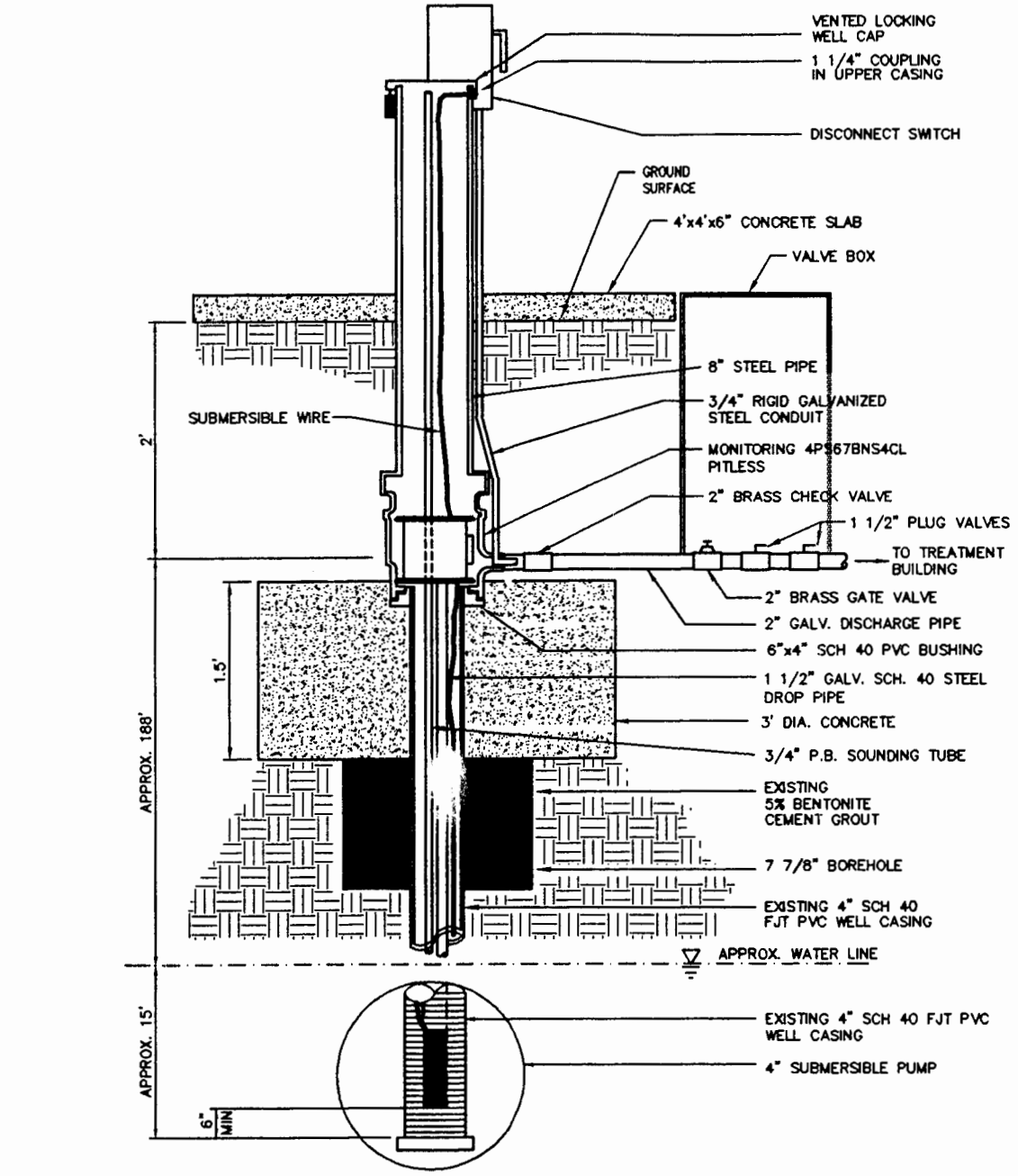

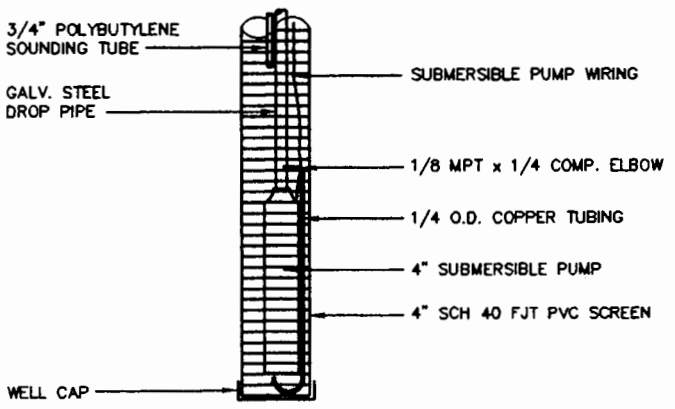

4" SUBMERSIBLE PUMP DETAIL

FIGURE 1.3

PUMP & TREAT WELL HEAD DETAIL (PSMW-16)

Public Service Company of New Mexico
Person Generating Station
Albuqueque, New Mexico

PARSONS ENGINEERING SCIENCE, INC.
Denver, Colorado

K:\PNM\95DN0671, 04/11/95 at 10:42

- Connect a 10-Hp test blower (a trailer mounted system owned by Parsons ES) to the well and extract soil gas at a rate of approximately 100 standard cubic feet per minute (scfm) for phase I testing.

1.3.2 Groundwater Pump and Treat

The Corrective Measures Proposal recommended the following approach and conceptual design for the Phase I groundwater pump and treat system:

- Conduct a 60-day groundwater pump and treat test;
- Install groundwater pumps in the existing monitoring well PSMW-16 and in the dual purpose VEW/DW well;
- Install a skid mounted, low profile air stripping unit; and
- Obtain approval for the discharging treated water to the University of New Mexico Championship Golf Course irrigation system or to the nearby storm system.

SECTION 2

UPDATES TO THE CORRECTIVE MEASURES PROPOSAL

2.1 SIGNIFICANT DESIGN CHANGES TO THE CMP

Several design changes have been implemented since the issuing of the Corrective Measures Proposal. The design changes were initiated to improve system performance.

2.1.1 Soil Vapor Extraction

Significant design changes to the Soil Vapor Extraction System include the following:

- The trailer mounted 10-Hp test blower was replaced with a more permanent 10-Hp skid mounted system. The 10-Hp system was found to be sufficient for full-scale application and this system will be used throughout the implementation of Phase II;
- The four small granular activated carbon (GAC) canisters shown in the process flow and instrumentation diagram (P&ID) were replaced with one large 1,000 lb carbon unit for the start-up testing; and
- An additional 1,800 lb carbon unit has been added in series to the above mentioned 1,000 lb carbon unit to handle the higher than expected VOC concentrations.

2.1.2 Groundwater Pump and Treat

Significant design changes to the Groundwater Pump and Treat System include the following:

- Bag filters and a 1,000 lb liquid phase carbon unit have been installed after the air stripping unit for polishing of the liquid effluent; and
- A golf course discharge bypass line has been routed to a concrete holding pond located on the Person Station facility. This pond can be used as a temporary holding facility for treated groundwater effluent.

2.2 GOLF COURSE DISCHARGE APPROVAL

The Person Station discharge plan was approved by the New Mexico Environment Department on January 15, 1995. The plan allows for treated groundwater from the Person Generating Station to be discharged to the University of New Mexico's Championship Golf Course. A copy of this permit has been included in Appendix A.

2.3 AIR DISCHARGE APPROVAL

The Person Station air stripping/vapor extraction and treatment system discharge plan was approved by the City of Albuquerque's Environmental Health Department on March 16, 1994. An analysis to verify the emissions from the treatment systems and dispersion modeling was completed to determine the effect on ambient air. A copy of this permit has been included in Appendix B.

2.4 RCRA PERMIT MODIFICATION

A RCRA permit modification was approved by NMED to allow construction of the VEW/DW well through the existing RCRA cap. The existing RCRA permit for Person Station did not allow disturbance of the RCRA closure cap. In October 1993, PNM applied for a RCRA permit modification to allow construction of the VEW/DW well through the closure cap. The permit modification was public noticed March 18, 1994, and the permit modification was approved June 3, 1994.

SECTION 3

PHASE I TEST RESULTS

3.1 SOIL VAPOR EXTRACTION TEST RESULTS

The start-up test and system evaluation was conducted between August 22 and 25, 1994. Modifications were made based on start-up results and extended system testing was conducted between September 22 and November 17, 1994. Existing groundwater monitoring wells and newly installed soil gas probes were used to monitor soil gas vacuum response and VOC concentrations during SVE system evaluation.

The evaluation was conducted by applying a vacuum to the VEW/DW using the SVE system (Figure 3.1), while monitoring the subsurface pressure distribution at existing wells PSMW-1, PSMW-2, and PSMW-3, and at soil gas probes SG1 and SG2 (Figure 3.2). In addition, the removal of VOCs from the subsurface was monitored both before and after the granular activated carbon air treatment unit using a direct-reading field instrument and laboratory analyses of collected air samples. Specific objectives of this evaluation were to :

- Determine VOC removal rates;
- Confirm that the entire soil volume is being treated;
- Evaluate the effectiveness of the GAC air treatment unit; and
- Determine soil permeability to air flow.

Calculations from the pilot test are presented in Appendix C, and Appendix D contains the laboratory analytical results.

3.1.1 Soil Gas Permeability

Two soil gas permeability tests were conducted to determine the radius of influence of the VEW/DW at different flow rates to calculate the soil permeability. Test 1 involved extracting air from the VEW/DW for 70 minutes at a flow rate of approximately 240 standard cubic feet per minute and an average vacuum of 42 inches of water. Test 2 was then conducted for 80 minutes at a rate of approximately 103 scfm and an average vacuum of 20 inches of water.

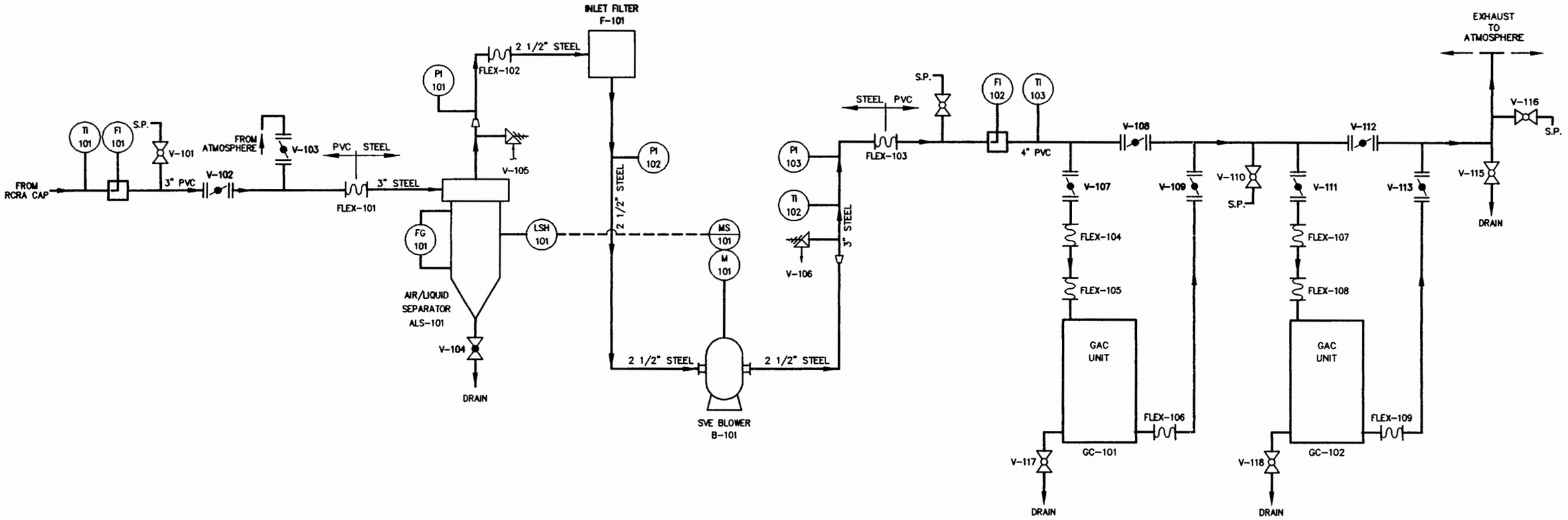

P&ID AND MECHANICAL LEGEND

FLEXIBLE COUPLING	REDUCER
GLOBE VALVE	FLANGE
BALL VALVE	ELECTRICAL SIGNAL
BUTTERFLY VALVE	LIQUID LEVEL SWITCH-HIGH (LSH XXX)
PRESSURE RELIEF VALVE	PRESSURE/VACUUM INDICATOR (PI XXX)
VACUUM RELIEF VALVE	MOTOR STARTER (MS XXX)
PRIMARY FLOW DIRECTION	MOTOR (M XXX)
SVE BLOWER	FLUID SITE GAUGE (FG XXX)
SAMPLING PORT (S.P.)	TEMPERATURE INDICATOR (TI XXX)
FLOW RATE INDICATOR (FI XXX)	

FIGURE 3.1

SVE PROCESS FLOW AND INSTRUMENTATION DIAGRAM

Public Service Company of New Mexico
Person Generating Station
Albuquerque, New Mexico

PARSONS ENGINEERING SCIENCE, INC.
Denver, Colorado

K:\PNM\95DN0672, 04/11/95 at 14:35

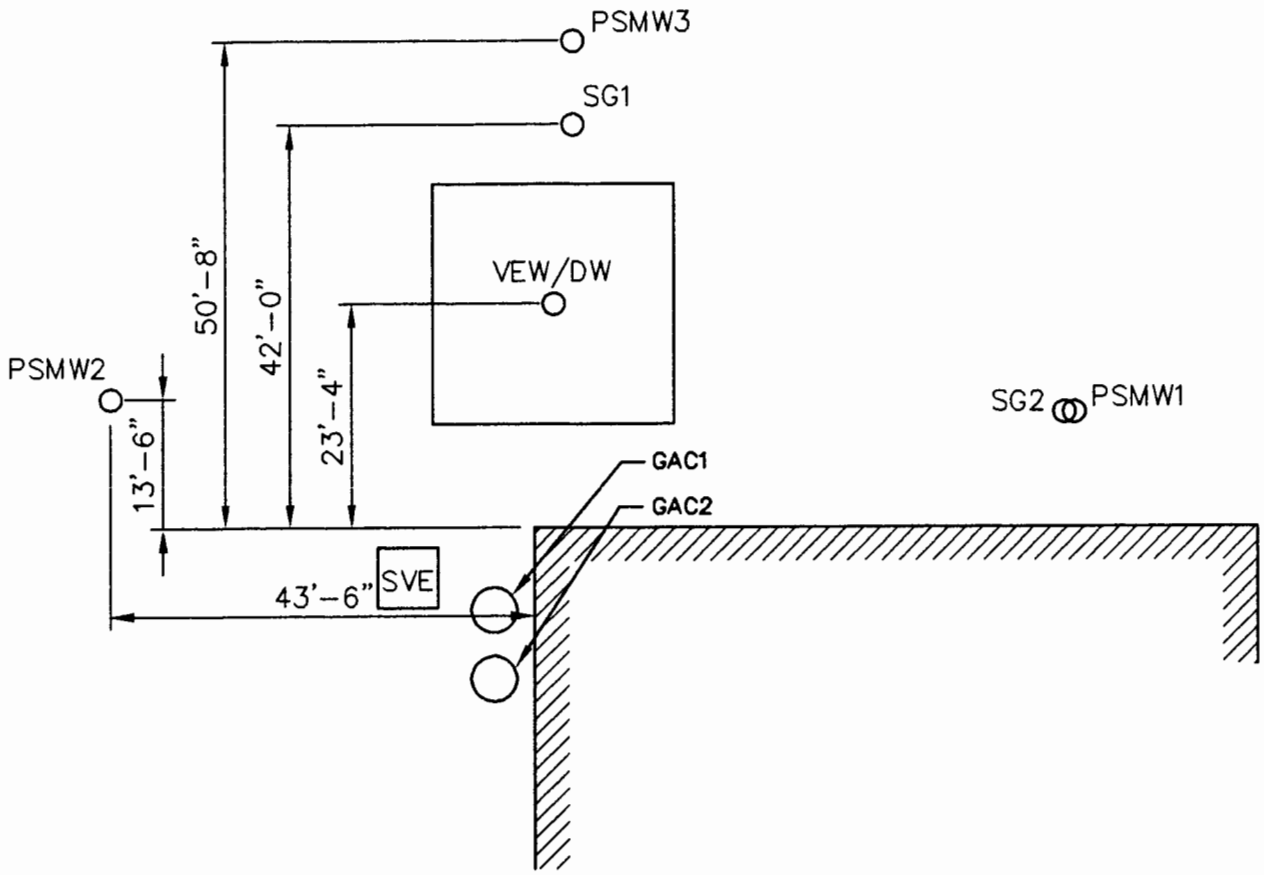

LEGEND

VEW/DW ○ VAPOR EXTRACTION/DEWATERING WELL

SG2 ○ SOIL GAS PROBE

PSMW1 ○ PUBLIC SERVICE MONITORING WELL

▨ BUILDING

GAC1 GRANULATED ACTIVATED CARBON

SVE SVE BLOWER

FIGURE 3.2

SOIL GAS MONITORING POINTS SVE SYSTEM

Public Service Company of New Mexico
Person Generating Station
Alberquerque, New Mexico

ENGINEERING-SCIENCE, INC.

Denver, Colorado

Following Test 2, minor system modifications were made and the system started and operated continuously at a flow rate of approximately 240 scfm for the next 40 hours, when breakthrough was detected at the outlet of the GAC unit.

The vacuum response at each monitoring well and soil gas probe was measured at approximately 5-minute intervals until steady-state conditions were achieved. Due to the relatively long time required to reach steady-state conditions, the dynamic method of determining soil gas permeability (Johnson et al., 1990) was selected. Average soil permeability of approximately 34-78 darcys, typical for permeable sandy soils, was calculated for this site.

3.1.2 Soil Gas VOC Monitoring

Throughout the time the SVE system was in operation, VOC concentrations in the soil gas extracted from the VEW/DW, monitoring wells, and soil gas probes were monitored using both direct-reading field instrument and laboratory analyses. Field screening results are presented in Table 1 and laboratory results are summarized in Table 2. A photoionization detector with both 10 and 11.8 electron-volt (ev) lamps and calibrated to a 100 parts per million (ppm) isobutylene standard was used to screen samples in the field. Air samples for laboratory VOC analysis were collected in 1-liter SUMMA canisters and sent to Air Toxics, Ltd. in Folsom, California. These samples were analyzed using U.S. Environmental Protection Agency (EPA) Method TO-14 (see Appendix D).

Initial soil gas samples were collected from well PSMW-3, soil gas probe SG1, and from the VEW/DW to determine the equilibrium VOC concentrations in the soil gas at the beginning of the test. Samples for laboratory analysis were subsequently collected from the VEW/DW and after the GAC unit at approximately 24-hour intervals until breakthrough of VOC was detected at the outlet of the GAC unit. Soil gas samples for field screening were collected from the monitoring wells, soil gas probes, and before and after the GAC unit at more frequent intervals as presented in Table 1.

Soil gas VOC concentrations in samples collected from the monitoring wells and soil gas probes decreased with time during system operation. The concentration of total VOCs in the soil gas samples from the VEW/DW exceeded the anticipated range (maximum of 2,000 ppmv) of the PID for most samples (Table 1).

3.1.3 Radius of Influence

The radius of influence of a VEW is the horizontal distance from the well to the outer limit of vacuum response. Results from the permeability tests indicate that the radius of influence at flow rates of both 103 and 240 scfm exceeded 53 feet at depths from 5 feet below ground surface to just above the water table surface at a depth of approximately 110 feet. This radius of influence should be more than adequate to remediate the soils directly impacted by the vessel waste.

TABLE 1
FIELD SCREENING RESULTS FOR TOTAL VOC

PUBLIC SERVICE COMPANY OF NEW MEXICO
PERSON GENERATING STATION
ALBUQUERQUE, MEW MEXICO

Location	Date	Time	PID (ppmv)	Comments
SP2 (before GAC)	8-23-94	11:25	> 2,000	lab sample VW-1
		14:10	700	bleed valve open
		15:56	> 2,000	
		17:03	> 2,000	
		18:44	1367	
	8-24-94	07:53	> 2,000	
		08:28	> 2,000	lab sample VW-2
		15:00	> 2,000	
	8-25-94	08:30	> 2,000	
		09:20	> 2,000	lab sample VW3
SP3 (after GAC)	8-23-94	11:27	< 1	lab sample GAC-1
		14:00	< 1	
		15:54	< 1	
		17:02	< 1	
		18:42	< 1	
	8-24-94	07:53	< 1	
		08:48	< 1	lab sample GAC-2
		15:00	< 1	
	8-25-94	08:30	517	breakthrough
		09:25	517	lab sample GAC-3
		09:30	512	lab sample GAC-3A
SG1 (soil gas probe - 5' depth)	8-23-94	07:48	113	
		08:46	126	
		14:21	181	lab sample SG1-1
		15:44	7.9	
		17:07	36.1	
		18:33	11.0	
	8-24-94	07:53	4.0	
		15:00	< 1	
	8-25-94	08:30	< 1	

TABLE 1 (CONTINUED)
FIELD SCREENING RESULTS FOR TOTAL VOC

PUBLIC SERVICE COMPANY OF NEW MEXICO
PERSON GENERATING STATION
ALBUQUERQUE, MEW MEXICO

Location	Date	Time	PID (ppmv)	Comments
SG2 (soil gas probe - 14' depth)	8-23-94	08:02	91	
		14:27	52	
		15:42	39.9	
		17:09	59.0	
		18:40	23.9	
	8-24-94	07:53	8.0	
		15:00	< 1	
	8-25-94	< 1	< 1	
PSMW1	8-23-94	07:56	20.0	
		14:25	190	
		15:38	71.8	
		17:10	151	
		18:35	123	
	8-24-94	07:53	61.2	
		15:00	76.9	
	8-25-94	08:30	22.7	
PSMW2	8-23-94	07:37	420	
		14:15	333	
		15:50	416	
		17:13	295	
		18:22	292	
	8-24-94	07:53	300-400	readings continued to fluxuate between these values
		15:00	172	
	8-25-94	08-30	170-300	see comment above
PSMW3	8-23-94	07:26	1292	
		08:40	904	lab sample PSMW3-1
		14:20	520	
		15:46	440	
		17:17	543	
		18:27	483	
	8-24-94	07:53	358	
		15:00	349	
	8-25-94	08:30	304	

TABLE 2
SUMMARY OF LABORATORY ANALYTICAL RESULTS

PUBLIC SERVICE COMPANY OF NEW MEXICO
PERSON GENERATION STATION
ALBUQUERQUE, NEW MEXICO

Sample ID	Location	Date	Time	1,1-Dichloro-ethene (ppmv)	chloroform (ppmv)	1,1,1-Trichloro-ethane (ppmv)	Tri-chloro-ethene (ppmv)	Tetra-chloro-ethane (ppmv)	1,3,5-Trimetyl-benzene (ppmv)	1,2,4-Trimethyl-benzene (ppmv)
VW-1	before air treatment	8/23/94	11:25	27.00	ND	82.00	ND	1400.00	ND	7.30
GAC-1	after air treatment	8/23/94	11:27	ND	ND	ND	ND	0.084	ND	ND
PSNM3-1	monitoring well PSMW-3	8/23/94	08:40	66.00	ND	69.00	ND	570.00	ND	ND
SG1-1	soil gas probe SG1	8/23/94	08:46	1.80	ND	5.70	ND	100.00	ND	ND
VW-2	before air treatment	8/24/94	08:28	29.00	ND	41.00	ND	880.00	ND	ND
GAC-2	after air treatment	8/24/94	08:48	ND	ND	ND	ND	ND	ND	ND
VW-3	before air treatment	8/25/94	09:20	40.00	ND	45.00	ND	1100.00	3.00	5.40
GAC-3	after air treatment	8/25/94	09:25	60.00	1.20	120.00	1.60	340.00	ND	ND

3.1.4 Laboratory VOC Analytical Results

Laboratory results for all VOCs detected in soil gas samples collected during the start-up test are summarized in Table 2. Concentrations of VOCs generally decreased with time, however the duration of the initial 2-day test was insufficient to accurately estimate rates of long-term VOC removal.

3.1.5 VOC Removal Rates

A total of approximately 326 pounds of VOCs were removed during the 2-day test period. Table 3 summarizes the VOC removal rates encountered. Removal rates generally decreased with time, from a maximum of approximately 9.10 pounds per hour (lb/hr) after one hour of system operation to 5.78 lb/hr and 7.24 lb/hr after 22 and 47 hours, respectively (Appendix C). Breakthrough of VOCs in the single GAC unit used for this test occurred during the early morning hours of 24 August 1994. At 09:30 AM, emissions of 0.2 lb/hr 1,1, DCE, 0.6 lb/hr 1,1,1 TCA, and 2.1 lb/hr PCE were occurring in the carbon effluent based on laboratory analysis (Appendix C). To prevent another surprise breakthrough two carbon units have been placed in series and the influent and discharge from the first GAC unit was monitored every 8-10 hours with a photoionization detector for the first week of operation.

3.1.6 Air Discharge Requirements

The Air Discharge Permit for the both the soil vapor extraction system and the groundwater treatment system requires the following:

- Total emissions shall not surpass 0.75 lb/hr of non-methane hydrocarbons including no more than 0.375 lb/hr of 1,1,1-TCA, 0.375 lb/hr of PCE, and 0.003 lb/hr of 1,1-DCE.

3.2 LONG TERM SOIL VAPOR EXTRACTION SYSTEM EFFECTIVENESS

The radius of vacuum influence of the SVE system will exceed 60 feet. Vacuum readings in excess of 2-inches of water were achieved in all soil vapor monitoring points. This included PSMW-1 which is located approximately 56 feet from the VEW/DW well and is screened within 10 feet of the water table. The 10 Hp vacuum blower has both the flow and vacuum capacity required to remediate all soils directly impacted by the former vessel discharge.

TABLE 3
TOTAL VOCS REMOVED DURING STARTUP TEST

PUBLIC SERVICE COMPANY OF NEW MEXICO
PERSON GENERATING STATION
ALBUQUERQUE, NEW MEXICO

COMPOUND	SAMPLE	TIME INTERVAL INTERVAL (hours)	REMOVAL RATE (lb/hr)	TOTAL REMOVED (lb)	
1,1-Dichloroethene	VEW-1	11	0.10	1.07	
1,1-Dichloroethene	VEW-2	23.5	0.11	2.47	
1,1-Dichloroethene	VEW-3	12.5	0.15	1.81	
					5.35
1,1,1-Trichloroethane	VEW-1	11	0.40	4.43	
1,1,1-Trichloroethane	VEW-2	23.5	0.21	4.82	
1,1,1-Trichloroethane	VEW-3	12.5	0.23	2.81	
					12.06
Tetrachloroethene	VEW-1	11	8.56	94.18	
Tetrachloroethene	VEW-2	23.5	5.47	128.47	
Tetrachloroethene	VEW-3	12.5	6.83	85.43	
					308.08
1,3,5-Trimethylbenzene	VEW-1	11	0.00	0.00	
1,3,5-Trimethylbenzene	VEW-2	23.5	0.00	0.00	
1,3,5-Trimethylbenzene	VEW-3	12.5	0.01	0.18	
					0.18
1,2,4-Trimethylbenzene	VEW-1	11	0.03	0.35	
1,2,4-Trimethylbenzene	VEW-2	23.5	0.00	0.00	
1,2,4-Trimethylbenzene	VEW-3	12.5	0.02	0.30	
					0.65
		TOTAL VOCs REMOVED			326.32

During the extended operating period the flow rate from the vent well was reduced from 240 scfm to 120 scfm. This reduction in flow was to provide a slower loading rate for the activated carbon and to prevent a rapid breakthrough of volatile organics. Throughout the 57-day extended testing period the vacuum level at the well head was approximately 25 inches H_2O. Significant soil moisture was accumulating in the knockout pot which required draining approximately every 48 hours. Soil moisture was also collecting at the bottom of GAC canisters which required draining. Extraction operations were stopped in mid-November because of the significant water vapor condensation which was occurring at the vapor discharge point. SVE operations will restart when ambient temperatures are higher and condensation problems will be reduced.

3.2.1 Soil Vapor Concentrations

The reduction in extracted soil gas that has occurred during the first 60 days of SVE operations is illustrated in Table 4. As predicted by initial soil sampling, tetrachloroethane (PCE) is the primary soil contaminant with much smaller quantities of 1,1-dichloroethene and 1,1,1-trichloroethane recovered. Small quantities of trimethylbenzene were also detected and indicate the presence of nonchlorinated solvent or fuel compounds in these soils.

Depressed initial oxygen and elevated carbon dioxide soil gas concentrations in these contaminated soils indicates that natural soil bacteria are using oxygen to degrade hydrocarbon residuals. Monitoring of oxygen depletion in soil gas is proposed to account for biological remediation that is occurring.

3.2.2 Activated Carbon Treatment

Two granular activated carbon units are currently providing treatment for extracted soil gas to comply with City of Albuquerque permit requirements. Table 4 summarizes the GAC loading rates to date. Based on actual loading and estimates provided by Westates Carbon Inc., the average adsorptive capacity of the GAC is 0.25 - 0.30 pounds of VOCs per pound of carbon. Based on the current mixture of volatile organics, the new 1,800 pound carbon bed should provide approximately 140 days of treatment. Based on the 22 November 1994 analysis of extracted soil gas, only the 1,1-DCE discharge standard of 0.003 lbs/hr would be exceeded without carbon treatment. The 22 November 1994 1,1-DCE concentration in the extracted soil gas was 5.8 ppm or 0.011 lbs/hr at the 120 scfm extraction rate.

TABLE 4

VOLATILE ORGANICS IN EXTRACTED SOIL GAS (120 SCFM)
PERSON GENERATING STATION

	PCE		1,1,1 TCA		1,1 DCE		Daily Carbon Use
Date	ppmv	lb/hr	ppmv	lb/hr	ppmv	lb/hr	lbs. Carbon/day
8/23/94*	1400	9.24	82	0.043788	27	0.10368	893
8/25/94*	340	2.244	120	0.06408	60	0.2304	477
9/22/94	970	3.201	37	0.09879	60	0.1152	363
9/29/94	540	1.782	20	0.0534	26	0.04992	191
10/9/94	110	0.363	7.2	0.019224	13	0.02496	52
10/13/94	73	0.2409	10	0.0267	21	0.04032	56
10/20/94	44	0.1452	7.8	0.020826	14	0.02688	37
10/27/94	33	0.1089	6.1	0.016287	11	0.02112	28
11/3/94	20	0.066	4.6	0.012282	8.9	0.017088	21
11/10/94	13	0.0429	3.2	0.008544	6.5	0.01248	15
11/17/94	10	0.033	2.8	0.007476	5.8	0.011136	13
Total lbs. Removed		1141		66		57	

* Flow Rate at 240 SCFM

3.3 GROUNDWATER TREATMENT SYSTEM TEST RESULTS

The groundwater treatment system (Figure 3.3) start-up test and evaluation was conducted during the week of 23 January 1995 and lasted for 37 days. Existing groundwater monitoring wells were used to monitor drawdown for the pump test. Groundwater samples were collected at wells PSMW-16 and VEW/DW, influent prior to the air stripper (composite of PSMW-16 and VEW/DW), air stripper effluent, and carbon polishing effluent. Specific objectives of this evaluation were to determine:

- The steady state yield of the groundwater pumping wells PSMW-16 and VEW/DW;
- The radius of influence of the groundwater pumping wells PSMW-16 and VEW/DW;
- The influent concentrations;
- The effluent concentrations; and
- The treatment system performance.

This information will be used to optimize system performance for Phase II (i.e. to properly locate additional extraction wells, to set flow parameters, etc.). The groundwater treatment system was operated for one day on January 27, 1995 with continuous operation beginning on January 30, 1995. The system was shutdown on March 8, 1995.

3.3.1 Pump Test Results

The following data has been summarized from the Person Station Phase I pumping test report (METRIC, 1995). The two groundwater pumping wells PSMW-16 and VEW/DW were continually pumped for 37 days. Electronic sounders were used to measure water levels in both the pumped and monitoring wells to the nearest 0.01 foot. Totalizing flow meters located within the groundwater treatment plant were used to calculate the average discharge rates for PSMW-16 and VEW/DW.

The steady state pumping rates attained for wells PSMW-16 and VEW/DW during this test were 13.3 and 5.6 gallons per minute (gpm) respectively. Well drawdown data was collected from the two pumped wells (VEW/DW and PSMW-16) and ten observation wells (PSMW-1R, 2, 3, 10, 12A, 17, 18, 19X, 22 and 24).

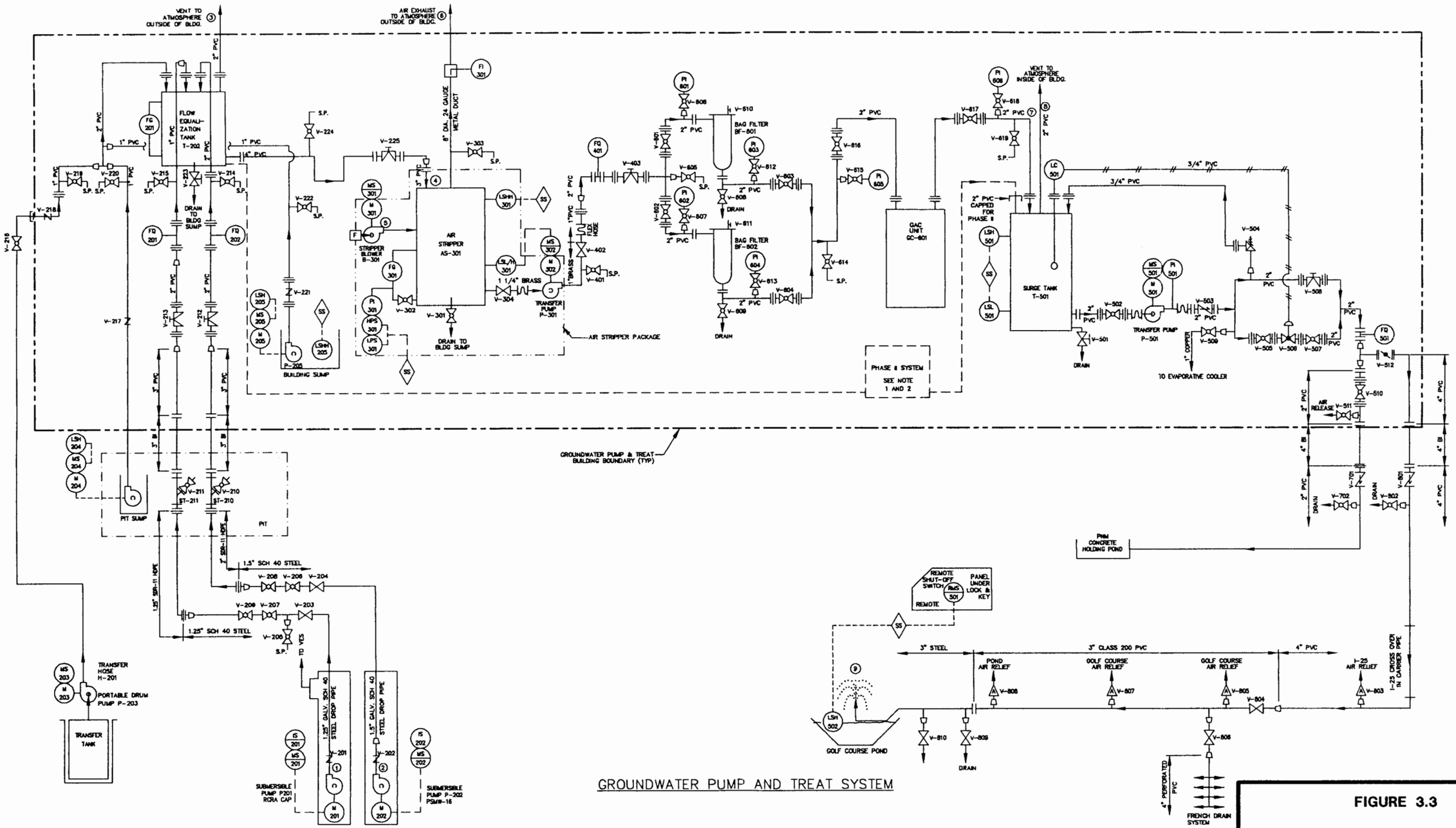

GROUNDWATER PUMP AND TREAT SYSTEM

ABBREVIATIONS

INSTRUMENTATION

FI	FLOW INDICATOR
FG	FLUID SITE GAUGE
FQ	FLOW TOTALIZER
HPS	HIGH PRESSURE SWITCH
IS	CURRENT SWITCH
LC	LEVEL CONTROLLER
LPS	LOW PRESSURE SWITCH
LSH	LEVEL SWITCH HIGH
LSHH	LEVEL SWITCH HIGH-HIGH
LSL	LEVEL SWITCH LOW
M	MOTOR
MS	MOTOR STARTER
PI	PRESSURE INDICATOR
RMS	REMOTE SHUTOFF SWITCH
SS	SYSTEM SHUTDOWN

PUMPS AND PIPING

BI	BLACK IRON
DIA	DIAMETER
HPS	HOSE
HDPE	HIGH DENSITY POLYETHYLENE
P	PUMP
PVC	POLYVINYL CHLORIDE
SCH	SCHEDULE
SP	SAMPLING PORT
ST	STRAINER
V	VALVE

OTHER

SI	AIR STRIPPER
BF	BAG FILTER
BLDG	BUILDING
GAC	GRANULAR ACTIVATED CARBON
T	TANK
VES	VAPOR EXTRACTION SYSTEM

NOTES

1) GROUNDWATER PUMP AND TREAT SYSTEM PHASE II WILL ADD ONE AIR STRIPPER ALONG WITH ALL NECESSARY APPURTENANCES.
2) PHASE II SYSTEM WILL ADD APPROXIMATELY 50 GPM FLOW.
3) (SS) SYSTEM SHUTDOWN
   -SYSTEM SHUTDOWN FOR THE WATER TREATMENT SYSTEM WILL CUT OFF POWER TO SUBMERSIBLE PUMPS, STRIPPER BLOWER, AIR STRIPPER TRANSFER PUMP AND SURGE TANK TRANSFER PUMP BY PLC. ALARM ANNUNDIATOR AT REEVES STATION VIA MODEM FOR SHUT SYSTEM SHUTDOWN.
4) PVC IS SCHEDULE 80 UNLESS NOTED AS OTHERWISE

FIGURE 3.3

GROUNDWATER TREATMENT PLANT P&ID

Public Service Company of New Mexico
Person Generating Station
Albuquerque, New Mexico

PARSONS ENGINEERING SCIENCE, INC.
Denver, Colorado

K:\PNM\O&M\95DN0240, 04/11/95 at 15:09

The maximum measured drawdown encountered in the observation wells are presented on the following table.

OBSERVATION WELL DRAWDOWN	
WELL	MEASURED (ft)
PSMW-1R	0.47
PSMW-2	0.27
PSMW-3	0.31
PSMW-10	0.53
PSMW-12A	NOT AVAILABLE
PSMW-17	0.50
PSMW-18	0.52
PSMW-19X	NOT ANALYZED
PSMW-22	0.53
PSMW-24	NONE

The radius of influence for wells PSMW-16 and VEW/DW were approximately 600 and 80 feet respectively as shown on Figure 3.4. The Jacob Solution (semi-log plots) to the Theis equation was used to evaluate the groundwater data. The validity of using the Jacob Solution using the criteria in Johnson, 1974 was assessed using the time-drawdown data. It is important to note that the drawdown within the monitoring wells was still increasing at the end of the 37 day pumping test.

The apparent transmissivity for PSMW-16 ranged from a low of 4,880 to a high of 10,000 gallons per day/foot (gpd/ft). The apparent transmissivity for VEW/DW ranged from a low of 3,110 to a high of 10,000 gpd/ft. The hydraulic conductivity for PSMW-16 ranged from a low of 43 to a high of 89 feet/day (ft/day). The hydraulic conductivity for VEW/DW ranged from a low of 27 to a high of 131 ft/day.

3.3.2 Influent Contaminant Concentrations

Groundwater samples were collected at the pumping wells PSMW-16 and VEW/DW, air stripper influent and effluent, and carbon unit effluent. Water samples were sent to Analytical Technologies, Inc. in Albuquerque, New Mexico. These samples were analyzed using U.S. EPA-8010 (Chlorinated Hydrocarbons).

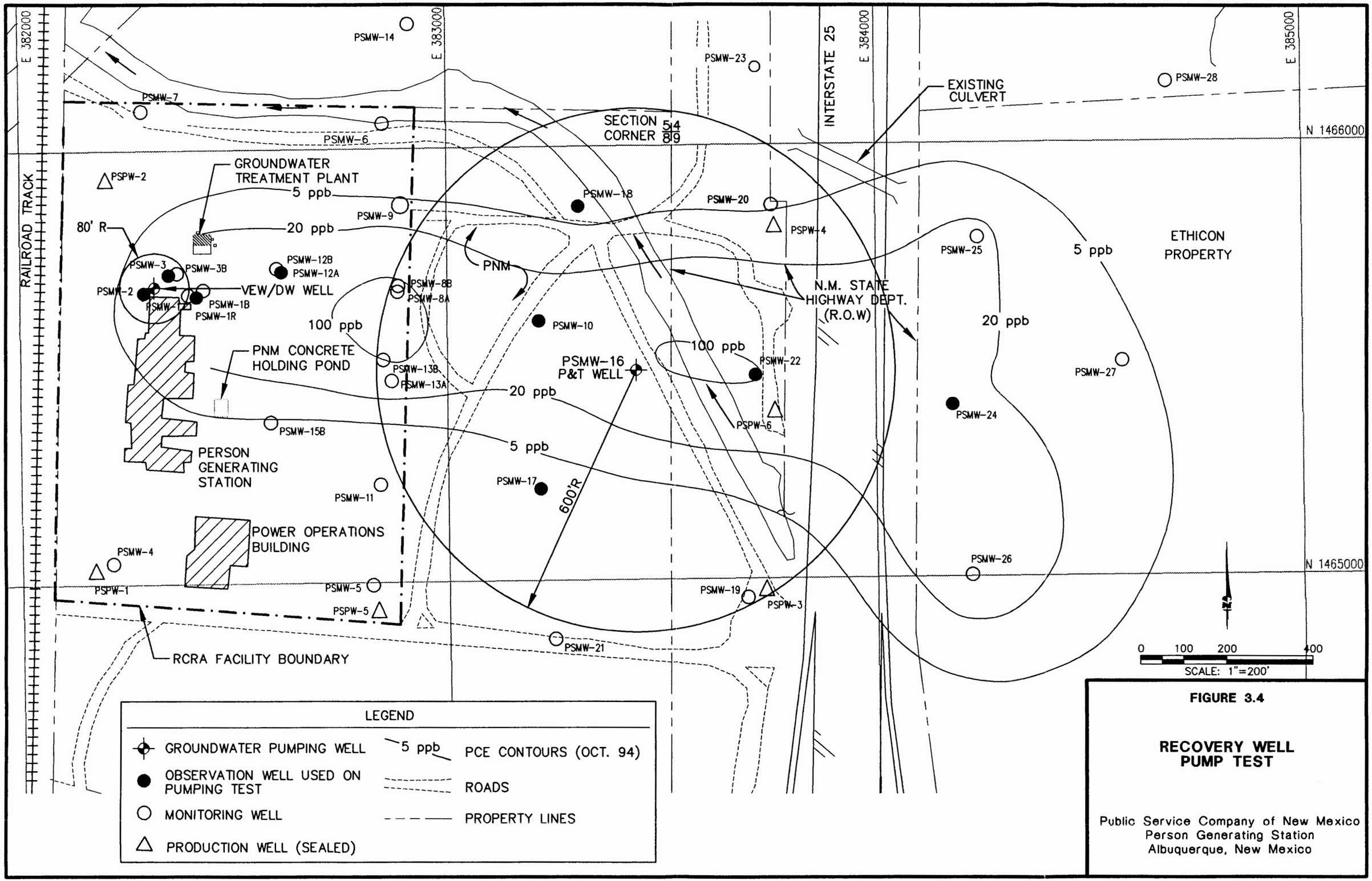

FIGURE 3.4

RECOVERY WELL PUMP TEST

Public Service Company of New Mexico
Person Generating Station
Albuquerque, New Mexico

K:\PNM\95DN0670, 04/19/95 at 08:17

Contaminant concentrations from PSMW-16 samples taken between 2/1/95 and 3/8/95 ranged from a high of 200 to a low of 69 parts per billion (ppb) for PCE, a high of 110 to a low of 39 ppb for DCE, and a high of 318 to a low of 115 ppb for total VOCs. Contaminant concentrations from VEW/DW samples taken during the same period ranged from a high of 5.3 to a low of 1.5 ppb for PCE, a high of 0.8 to a low of 0.3 ppb for DCE, and a high of 6.1 to a low of 1.8 ppb for total VOCs.

Composite contaminant concentrations (i.e. a composite of PSMW-16 and VEW/DW) entering the groundwater treatment system ranged from a high of 170 to a low of 54 ppb for PCE, a high of 74 to a low of 24 ppb for DCE, a high of 5.5 to a low of 2.2 ppb for TCA, and a high of 234 to a low of 87 ppb for total VOCs.

Other contaminants encountered in the composite sampling which were not explicitly identified in the Corrective Measures Proposal include Chloroform, which ranged from a high of 1.7 to a low of 0.6 ppb, 1,1-Dichloroethane (DCA) ranging from a high of 2.0 ppb to a low of 0.4 ppb, and Bromoform which was encountered in one sample at 0.07 ppb.

3.3.3 Air Stripper/Carbon Efficiency

The air stripper efficiencies have been calculated for both the high and low influent VOC concentrations encountered. The following table shows a conservative estimate (i.e. the effluents were below the reporting limits of the analysis for each compound) of air stripper efficiency for this test period.

AIR STRIPPER EFFICIENCY			
VOC Compound	Influent (ppb)	Effluent (ppb)	Efficiency (%)
PCE - High	170	< 0.5*	> 99.97
PCE - Low	54	< 0.5*	> 99.07
DCE - High	74	< 0.2*	> 99.73
DCE - Low	24	< 0.5*	> 97.92
TCA - High	5.5	< 0.5*	> 90.91
TCA - Low	2.2	< 1.0*	> 54.55
Total VOCs - High	234	BDL (< 1.9*)	> 99.19
Total VOCs - Low	87	BDL (< 2.9*)	> 96.67
* indicates value below reporting limit of analysis			

The carbon unit's efficiency has not been estimated because both the influent and effluent VOC concentrations were below the reporting limit of the analysis.

3.3.4 Monitoring Requirements

The Discharge Plan Approval for the groundwater treatment plant requires the following:

- A written record of groundwater and waste water quality analyses shall be kept at the facility;
- A written record of any discharges not authorized by the plan (i.e. leaks, spills, etc.) shall be kept at the facility;
- A written record of the groundwater treatment system as it pertains to operations and maintenance of equipment shall be kept at the facility;
- A written record of the monthly effluent volumes discharged to the golf course shall be kept at the facility. Effluent discharge rates will not exceed 288,000 gallons per day (Phase I discharge is about 30,000 gallons per day);
- Effluent concentrations of PCE, DCE, and TCA will not exceed 5 ppb for each constituent;
- A 24-hour composite sample of the groundwater treatment system effluent during the first week of operation. This composite sample is to be analyzed for manganese, iron, sulfate, chloride, nitrate as nitrogen, and total dissolved solids (TDS). These parameters shall not exceed WQCC standards;
- Sampling of the groundwater treatment plant influent and effluent for PCE, DCE, and TCA daily using EPA methods 601/8010 for the first week after remediation begins, then weekly for four weeks, and then monthly thereafter;
- Sampling of the two golf course irrigation ponds monthly, beginning with the initial month for PCE, DCE, and TCA;
- Submit monthly reports to NMED quarterly each year; and
- Records shall be retained for a minimum of 5 years.

The Air Discharge Permit for the groundwater treatment plant requires the following:

- See Section 3.1.6, Air Discharge Requirements (SVE).

3.4 GROUNDWATER TREATMENT SYSTEM EFFECTIVENESS

Well PSMW-16 had a lower pumping rate than expected (13.3 vs. 34.8 gpm) but the anticipated radius of influence was surpassed (600 vs. 450 ft). Well VEW/DW had a higher pumping rate than expected (5.6 vs. 1.0 gpm) but the anticipated radius of influence was not quite achieved (60 vs. 150 ft). Pump tests suggested the radius of influence and hydraulic conductivity is non-uniform (i.e. a heterogeneous aquifer

matrix exists) and pumps should be run at steady state rather than pulsed. Pulsed pumping will be more fully evaluated as part of Phase II.

The initial concentrations of contaminants for VEW/DW were expected to be 150 ppb PCE and 70 ppb DCE (based on April 1993 sampling). The measured concentrations were 5.3 ppb PCE and 0.8 ppb DCE (based on February 1995 sampling). The initial concentrations of contaminants for PSMW-16 were expected to be 100 ppb PCE and 58 ppb DCE (based on April 1993 sampling). The measured concentrations were 200 ppb PCE and 110 ppb DCE (based on February 1995 sampling). This may be an indication that the most contaminated portion of the plume has continued to migrate away from the source area in an easterly direction.

The groundwater treatment plant consistently surpassed the targeted cleanup levels from effluent discharge of 5 ppb for PCE, TCA and DCE. The air stripper efficiency was estimated at over 96% for total VOCs encountered. The carbon unit is on line to provide effluent polishing but does not appear to be required to meet targeted effluent levels. However, the carbon polishing unit is required per the NMED approved Discharge Plan.

3.4.1 Aquifer VOC Removal

The sampling data from the groundwater treatment system composite influent has been compiled on Table 5. A graphical representation of this data is presented in Figures 3.5 and 3.6. The concentrations of PCE, DCE, TCA, and total VOCs appear to have dropped by approximately 50% over the duration of this test. The concentration of extracted VOCs will typically decrease more rapidly during the initial months of pumping and will eventually level off at equilibrium concentrations. Continued extraction will be required to better estimate the time required to reach those asymptotic concentrations.

TABLE 5

Composite Influent VOCs and Sample Dates
Person Generating Station

Sample Date	1/27/95	1/30/95	1/31/95	2/1/95	2/2/95	2/3/95	2/4/95	2/9/95	2/15/95	2/22/95	3/1/95
DCE	68	57	57	74	49	50	49	54	32	24	28
PCE	130	170	120	150	110	120	78	88	70	65	54
Bromoform											0.7
Chloroform	1.2	1.1	1.2	1.1	0.9	1.7	0.6	2	2	0.7	1
DCA	0.5	0.5	0.5	0.6	0.5	0.2	0.4	2	1	0.5	0.6
TCA	5.4	5.3	5.3	3.8	3.9	5.5	4.2	4	3	2.7	2.2
Total VOC's	205.1	233.9	184	229.5	164.3	177.2	132.2	148	108	92.4	86.5

FIGURE 3.5

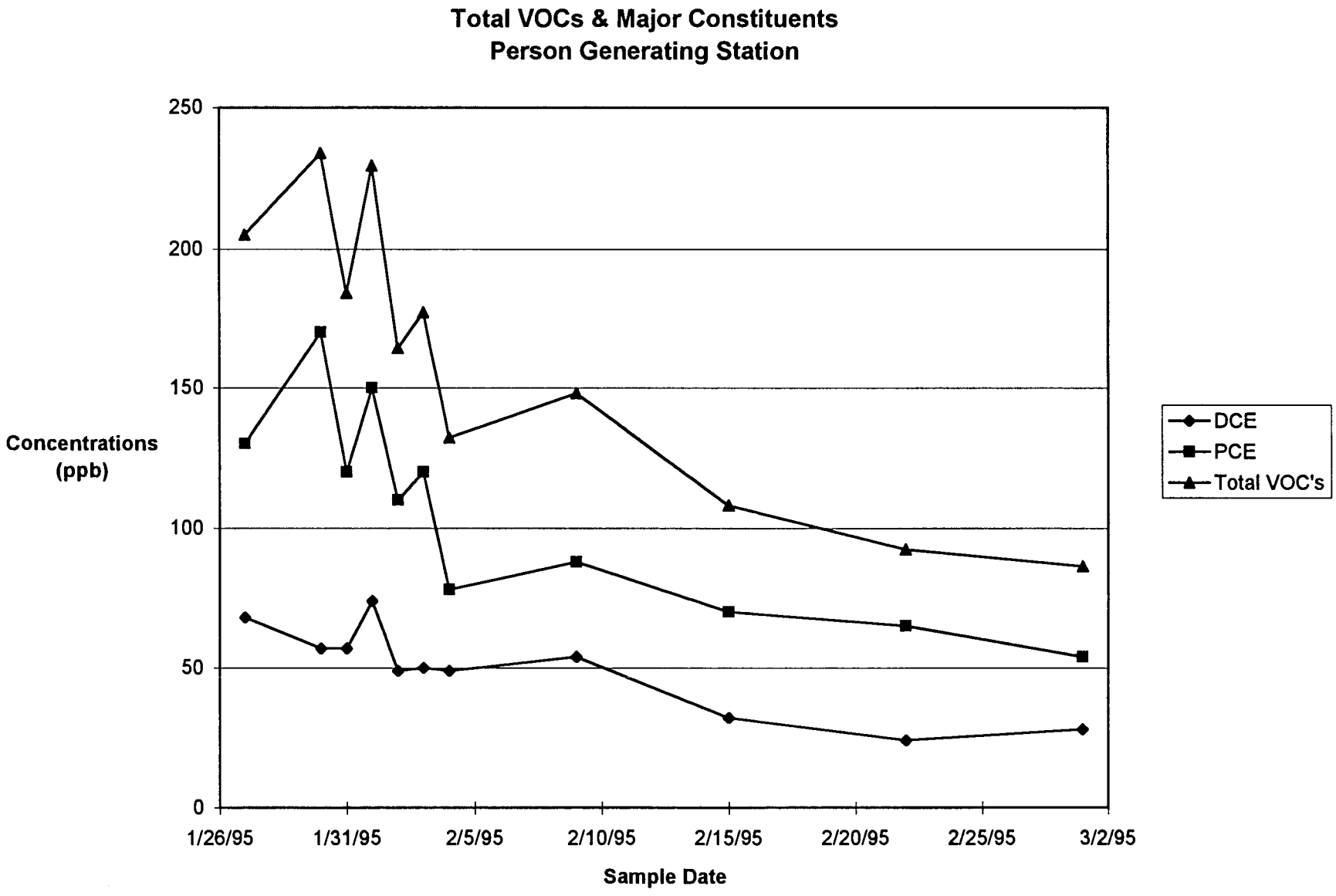
Total VOCs & Major Constituents
Person Generating Station
Concentrations (ppb)
250
200
150
100
50
0
1/26/95
1/31/95
2/5/95
2/10/95
2/15/95
2/20/95
2/25/95
3/2/95
Sample Date
DCE
PCE
Total VOC's

FIGURE 3.6

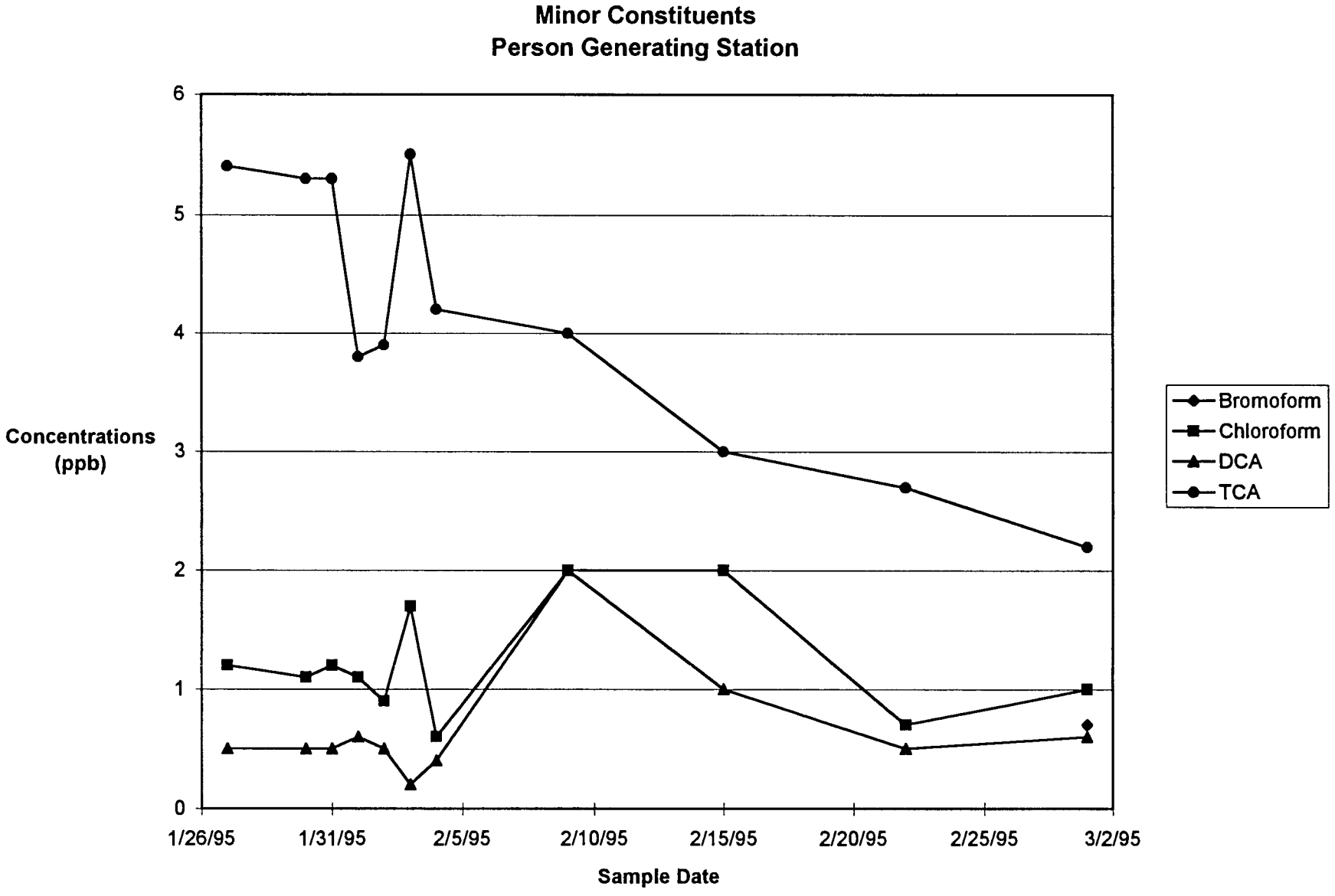
Minor Constituents
Person Generating Station
Concentrations (ppb)
0
1
2
3
4
5
6
1/26/95
1/31/95
2/5/95
2/10/95
2/15/95
2/20/95
2/25/95
3/2/95
Sample Date
Bromoform
Chloroform
DCA
TCA

SECTION 4

FUTURE SITE WORK

4.1 PHASE II DESIGN

Information from Phase I testing will be implemented into the Phase II design. Phase I data such as the sustained pumping rates, the capture zone of each well, contaminant concentrations, air stripper and carbon performance, and the benefits of pulsed pumping will be evaluated prior to Phase II implementation. The existing groundwater model will be re-evaluated based on Phase I data. The goal is to verify Phase II well placement to prevent further migration of the shallow VOC plume. The long-term goal is to continue to reduce plume concentrations to asymptotic levels and then re-evaluate the risk and fate of remaining residuals.

4.2 PHASE II CONSTRUCTION AND OPERATION

Phase II construction will place one additional air stripper in parallel to the existing one within the groundwater treatment plant. This will effectively double the maximum flow capacity of the plant from 50 to 100 gpm. Additional groundwater pumping wells will be manifolded into the existing plant.

Phase II will entail the installation of one new extraction well located between the VEW/DW well and PSMW-16; and the conversion of PSMW-24, PSMW-25, and PSMW-26 to extraction wells from monitoring wells.

Phase II will also entail continued operation and monitoring of both the SVE and groundwater treatment systems. The CMP predicted that the SVE system will be operational 18-24 months and the groundwater treatment system will be operational for 6-9 years. New estimates of cleanup time will be evaluated based on Phase I data.

4.3 DEEP PLUME INVESTIGATION

An evaluation of potential VOC contamination in the deep aquifer has been initiated. Dissolved chlorinated organic compounds are suspected to have migrated from the shallow aquifer to the deep aquifer via the gravel and sand pack of old production wells located downgradient of the Person Generating Station. All old production wells have been sealed to prevent additional contaminant vertical migration. Six multiple depth deep well clusters have been or are being installed upgradient of, adjacent to, and downgradient of the old production well to investigate the nature and extent of potential contamination in deeper portions of the aquifer. Low concentrations of each of the chlorinated organic compounds detected in the shallow aquifer underlying the Person Generating Station were detected primarily at about 500 feet below ground surface (bgs) and 800 feet bgs. The two distinct VOC plumes likely formed as contaminants

migrated vertically through the old production well pack and then migrated horizontally out from the well packing only in high permeability zones. No significant concentrations of VOCs were measured at any other depths. Analytical data from the last upgradient deep well cluster is not yet available. These data are critical to confirm the source of suspected contamination. A remedial assessment of the deep aquifer VOC contamination is scheduled to begin in early May 1995.

4.4 SCHEDULE

The following schedule is proposed for Phase II implementation in 1995.

PHASE II SCHEDULE*	
Air Permit Modification	May 1 - July 1
Air Stripper Installation	July 1 - July 8
Recovery Well Installation (4-inch)	May 15 - May 29
Pipeline Installation to New 4-inch Recovery Well	May 15 - May 29
Pipeline Manifold and Electrical Design	May 1 - May 26
Ethicon Negotiations for Well and Pipeline Installation	May 1 - July 1
Well and Pipeline Installation to East Side of I-25	July 1 - August 1
* Schedule is subject to permit approvals and negotiation with private entities.	

BIBLIOGRAPHY

Geoscience Consultants, Ltd. 1984. *Final Soil Contamination Assessment* - Public Service Company of New Mexico, Person Generating Station.

Johnson Division, Universal Oil Products Co. 1974. *Ground Water and Wells, A Reference Book for the Water-well Industry.*

Johnson, P.C. and others. 1990. *A Practical Approach to the Design, Operation, and Monitoring of In Situ Soil-Venting Systems.* Spring 1990 GWMR.

METRIC Corporation. 1992. *Results from well survey of a one-mile radius around Person Generating Station site* (based on secondary data only). Transmittal letter authored by Gary L. Richardson, P.E.

METRIC Corporation. 1993. *Corrective Action Directive Assessment Summary Report*, Person Generating Station, NMT360010342. Prepared for the Public Service Company of New Mexico, Albuquerque, New Mexico.

METRIC Corporation. 1995. *Phase I Pumping Test of the Groundwater Pumping System Wells at Person Station.* Prepared for the Public Service Company of New Mexico, Albuquerque, New Mexico.

Parsons Engineering Science. 1994. *Corrective Measures Proposal for the Person Generating Station*, Public Service Company of New Mexico, NMT360010342. Prepared for the Public Service Company of New Mexico, Albuquerque, New Mexico.

APPENDIX A

GOLF COURSE DISCHARGE PERMIT

CERTIFIED MAIL - RETURN RECEIPT REQUESTED

STATE OF NEW MEXICO
ENVIRONMENT DEPARTMENT

January 15, 1995

Jeff Sterba, Senior Vice President
Power Supply Resources
Public Service Company of New Mexico
Alvarado Square
Albuquerque, NM 87158

RE: Discharge Plan Approval, Person Station, DP-1006

Dear Mr. Sterba:

Pursuant to Water Quality Control Commission (WQCC) Reg. 3-109, the discharge plan application for DP-1006, submitted by Jerry Godwin for the discharge of 288,000 gallons per day of treated ground water from the Person Generating Station is hereby approved. The facility is located in the City of Albuquerque's South Valley in Section 4, T9N, R3E, Bernalillo County. In approving this discharge plan, the New Mexico Environment Department (NMED) has determined that the requirements of WQCC Reg. 3-109.C have been met.

The approved Person Generating Station treatment and disposal system is briefly described as follows:

Ground water below the Person Station contaminated with 1,1,2,2 Tetrachloroethylene (PCE), 1,1 Dichloroethylene (1,1-DCE), and 1,1,1 Trichloroethane (1,1,1-TCA) will be recovered and treated through an air stripper and thence trough a liquid-phase carbon absorption system to reduce each of the above VOC's to concentration levels not to exceed 5 parts per billion. Treated water will be pumped via pipeline to the University of New Mexico's South Golf Course and discharged to two synthetically-lined irrigation storage lagoons located on the golf course. Treated water from PNM's Person Station will constitute between 5 and 10 per cent of the water stored in the lagoons. Stored water will be applied to the golf course by spray irrigation.

The approved discharge plan consists of the materials and letters submitted by PNM and Metric Corporation dated June 13, September 14, October 26, and November 30, 1994. The

Gary Johnson
Governor

Mark Weidler
Secretary

Harold Runnels Building
1190 St. Francis Drive
P.O. Box 26110
Santa Fe, NM 87502
(505) 827-2850
FAX (505) 827-2836

DRUG FREE

discharge shall be managed in accordance with the approved plan and is subject to the conditions listed below.

However, approval of this discharge plan does not relieve you of your responsibility to comply with any other applicable federal, state and/or local laws and regulations, such as zoning requirements and nuisance ordinances.

CONDITIONS FOR APPROVAL

This discharge plan approval is subject to the following conditions for the following reasons:

1. PNM shall monitor the influent and effluent daily for the VOC's listed above using EPA methods 601/8010 for the first week after remediation commences, thence weekly for four weeks, and then monthly thereafter. Beginning with the initial monthly sampling, and monthly thereafter, PNM shall also sample the two irrigation lagoons at the UNM golf course and analyze for the above VOC's. Monthly reports shall be submitted to the Ground Water Section quarterly by February 15, May 15, August 15, and November 15 of each year. PNM shall copy monitor reports to: Terri Davis, NMED Hazardous & Radioactive Materials Bureau.

   The reason for this condition is to comply with § 3-109.C.3.c.(2) and 3-107 of the WQCC regulations.

2. PNM shall obtain a 24 hour composite sample of the effluent during the first week of discharging and analyze the sample for Manganese, Iron, Sulfate, Chloride, Nitrate as nitrogen, and TDS. If any of the above parameters exceed WQCC standards, PNM shall cease discharging until the treatment system is modified such that the parameters exceeding WQCC standards are treated to below WQCC standards.

   The reason for this condition is to comply with WQCC regulation 3-103.

SPECIFIC REQUIREMENTS

The terms and conditions of this approval contain specific requirements which are summarized below.

1. PNM will treat up to 288,000 gallons per day of VOC contaminated ground water from below their Person

Generating Station through an air stripper and liquid phase carbon absorption system.

2. PNM will pump treated ground water to the UNM South Golf Course for spray irrigation of approximately 100 acres as specified in PNM's "PIPELINE CONSTRUCTION AND WATER SUPPLY AGREEMENT' with UNM dated October 27, 1994.

3. PNM will monitor and report as follows:

   a) Record monthly effluent volumes discharged to the golf course using a totalizing flow meter. Records will be submitted with the quarterly reports.

   b) Sample and report as outlined in conditions # 1 and 2 under **CONDITIONS FOR APPROVAL** above.

4. If any portion of the treatment and/or delivery system fails to decrease contaminant concentrations to 5 parts per billion or less and/or deliver effluent to the golf course, PNM will shut down the recovery wells and not reactivate until the problems are corrected and contaminant levels are below requirements.

5. After cessation of operations PNM will close the facility as described in section 19 in their discharge plan application.

GENERAL DISCHARGE PLAN REQUIREMENTS

In addition to any other requirements provided by law, approval of discharge plan, DP-1006, is subject to the following general requirements:

Monitoring and Reporting

Monitoring and reporting shall be as specified in the discharge plan and supplements thereto. These requirements are summarized on the attached sheet(s). Any inadvertent omissions from this summary of a discharge plan monitoring or reporting requirement shall not relieve you of responsibility for compliance with that requirement.

Record Keeping

1. The discharger shall maintain at the facility, a written

record of ground water and waste water quality analyses.

The following information shall be recorded and shall be made available to the NMED upon request.

a. The dates, exact place and times of sampling or field measurements.

b. The name and job title of the individuals who performed the sampling or measurements.

c. The dates the analyses were performed.

d. The name and job title of the individuals who performed the analyses.

e. The analytical techniques or methods used.

f. The results of such analyses, and

g. The results of any split sampling, spikes or repeat sampling.

2. The discharger shall maintain a written record of any spills, seeps, and/or leaks of effluent, leachate and/or process fluids not authorized by this discharge plan.

3. The discharger shall maintain a written record of the operation, maintenance and repair of facilities/equipment used to treat, store and/or dispose of waste water; to measure flow rates; and/or to monitor water quality. This will include repairs, replacement or calibration of any monitoring equipment and repairs or replacement of any equipment used in the Person Generating Station remediation system.

4. The discharger shall maintain a written record of the amount of effluent discharges to the UNM Golf Course.

Inspection and Entry

In accordance with § 74-6-9.B & E NMSA 1978 and WQCC Reg. 3-107.D., the discharger shall allow the Secretary or her authorized representative, upon the presentation of credentials, to:

1. Enter at regular business hours or at other reasonable times upon the discharger's premises or where records must be kept under the conditions of this discharge plan.

2. Inspect and copy, during regular business hours or at other reasonable times, any records required to be kept under the conditions of the discharge plan.

3. Inspect, at regular business hours or at other reasonable times, any facility, equipment (including monitoring and control equipment), practices or operations regulated or required under this discharge plan.

4. Sample or monitor, at reasonable times for the purpose of assuring discharge plan compliance or as otherwise authorized by the New Mexico Water Quality Act, any effluent at any location before or after discharge.

Duty to Provide Information

In accordance with § 74-6-9.B NMSA 1978 and WQCC Reg. 3-107.D., the discharger shall furnish to the NMED, within a reasonable time, any relevant information which it may request to determine whether cause exists for modifying, terminating and/or renewing this discharge plan or to determine compliance with this plan. The discharger shall furnish to the NMED, upon request, copies of records required to be kept by this discharge plan.

Spills, Leaks and Other Unauthorized Discharges

This approval authorizes only those discharges specified in the discharge plan. Any unauthorized discharges violate WQCC Reg. 3-104, and must be reported to the NMED and remediated as required by WQCC Reg. 1-203. This requirement applies to all seeps, spills, and/or leaks discovered from the Person Generating Station remediation system.

Retention of Records

The discharger shall retain records of all monitoring information, including all calibration and maintenance records, copies of all reports required by this discharge plan, and records of all data used to complete the application for this discharge plan, for a period of at least five years from the date of the sample collection, measurement, report or application. This period may be extended by request of the Secretary at any time.

Enforcement

Failure to grant the Secretary or her authorized representative access to the records required to be kept by this discharge plan or to allow an inspection of the discharge facilities or to the collection of samples is a violation of this discharge plan and the WQCC Regulations. Such violations as well as other violations of the discharge plan, may subject the discharger to a compliance order, a compliance order assessing a civil penalty or an action in district court pursuant to § 74-6-10 NMSA 1978, and/or modification or termination of this discharge plan pursuant to § 74-6-5.L NMSA 1978. Penalties assessed as part of a compliance order shall not exceed $15,000 per day for violations of the terms of this permit or the requirements of § 74-6-5 NMSA 1978, and shall not exceed $10,000 per day for violations of other sections of the Water Quality Act.

Modifications and/or Amendments

The discharger shall notify NMED, pursuant to WQCC Regs. 3-107.C, of any modifications or additions to the Person Generating Station's remediation system, including any increase in waste water flow rate or waste water storage and disposal management changes to the system as approved under this discharge plan. The discharger shall obtain NMED's approval, as a discharge plan modification, prior to any increase in the quantity or concentration of constituents in the leachate above those approved in this plan. Please note that WQCC Regs. 3-109.E and F provide for possible future amendment of the plan.

Other Requirements

Please be advised that the approval of this plan does not relieve PNM of liability should your operation result in actual pollution of surface or ground water which may be actionable under other laws and/or regulations.

RIGHT TO APPEAL

If PNM is dissatisfied with this action taken by NMED, PNM may file a petition for hearing before the WQCC. This petition shall be in writing to the Water Quality Control Commission within thirty (30) days of the receipt of this letter. Unless a timely request for hearing is made, the decision of the NMED shall be final.

TRANSFER OF DISCHARGE PLAN

Prior to any transfer of ownership, the discharger shall provide the transferee a copy of the discharge plan, including a copy of this approval letter and shall document such to the NMED.

Jeff Sterba
DP-1006
January 15, 1995
page 7

PERIOD OF APPROVAL

Pursuant to WQCC Reg. 3-109.G.4., this discharge plan approval is for a period of 5 years. This approval will expire January 15, 2000 and you must submit an application for renewal at least 120 days before that date.

Sincerely,

Marcy Leavitt, Chief
Ground Water Protection &
Remediation Bureau

ML/RO/ro

Enclosures: Discharge Plan Summary Sheet

cc: Garth Graves, NMED District I Manager
Dan Vigil, NMED HPM, Albuquerque
Terri Davis, Geologist, H&RMB
Ron Johnson, PNM, Alvarado Square, Albuquerque 87158
Gary Richardson, Metric Corp., 8429 Washington Place, Albuquerque, NM 87113

NMED, GROUND WATER SECTION, DISCHARGE PLAN SUMMARY

Discharge Plan Number..... 1006
Date Report Generated..... 11-JAN-95
Staff Reviewer..... RICHARD OHRBOM

Legally Responsible Party. JEFF STERBA SR. V.P. 848-2838
Owner..... PUBLIC SERVICE CO OF NM
ALVARADO SQUARE
ALBUQUERQUE NM 87158

Facility..... PNM PERSON STATION-UNM GOLF COURSE

Primary Waste Type..... INDUSTRIAL GENERATING STATION
Treatment..... HYDROCARBON REMEDIATION AIR STRIPPER
Discharge..... LAND APPLICATION RECREATION
Discharge Location..... UNM SOUTH GOLF COARSE

Application Received..... 13-JUN-94
Public Notice Published... 18-JUL-94
Discharge Plan Approved... 15-JAN-95
Discharge Plan Expires.... 15-JAN-00

Discharge Volume.. 288000 gpd
Depth to GW..... 265 feet
TDS..... 250 mg/l

Monitoring Reports due.... 15-FEB 15-MAY 15-AUG 15-NOV

Sampling Category	Annual Frequency	No. of Sites	Sampling Description
2	12	1	Monthly volume of effluent to UNM, report quarterly
6	12	4	VOC's, Influent, Effluent, and Golf Course Ponds. Report Quarterly

_____ If this space is checked, monitoring requirements are summarized or explained in more detail on the attached sheet. Any inadvertent omission from this summary does not relieve the discharger of responsiblility for compliance with that requirement.

Send All monitoring reports or correspondence to:

RICHARD OHRBOM
Ground Water Section
Environment Department
1190 St. Francis Drive
Santa Fe NM 87503
(505) 827-2900

APPENDIX B

AIR DISCHARGE PERMIT

City of Albuquerque

P.O. BOX 1293 ALBUQUERQUE, NEW MEXICO 87103

March 16, 1994
CERTIFIED MAIL #P 077 872 704

Ms. Nancy Norem
Senior Engineer
Public Service Co. of New Mexico
Alvarado Square
Albuquerque, NM 87158

Dear Ms. Norem:

Re: PERMIT APPLICATION - #353 AIR STRIPPING / VAPOR EXTRACTION AND TREATMENT SYSTEM

This letter constitutes a permit to Public Service Co. of New Mexico (PNM) pursuant to Section 74-2-7 NMSA 1978 and Albuquerque/Bernalillo County Air Quality Control Regulation (AQCR) 20, *Authority-to-Construct Permits;* to construct and operate an air stripping / vapor extraction and treatment system at Person Generating Station at Broadway and Rio Bravo S.E. in accordance with the application received January 10, 1994.

The Division has performed an analysis to verify the emissions from the facility and dispersion modeling to determine the impact on the ambient air. Based on this analysis and the control measures described in your application, the Division has determined that the provisions of the Air Quality Control Act, the Albuquerque/ Bernalillo County Air Quality Control Regulations and Federal, State and Local regulations and ambient air quality standards will be met. However, in order to assure this, the following conditions have been placed on the permit.

1. Total emissions from all sources at the site shall not exceed 0.75 pound per hour of non-methane hydrocarbons including no more than 0.375 pounds per hour of 111-TCA, 0.375 pounds per hour of PCE and 0.003 pounds. per hour of 11-DCE.

2. All roadways, loading and unloading areas and other areas used by vehicles within or associated with the site, shall be watered and/or otherwise treated to prevent fugitive dust emissions.

3. If the total disturbed area of the site exceeds 0.75 acres a topsoil disturbance permit must be secured, pursuant to Regulation 8 of the Albuquerque/Bernalillo County Air Quality Control Board

Section 74-2-7 "J" NMSA 1978, states that the issuance of a permit does not relieve any person from the responsibility of complying with the provisions of the Air Quality Control Act and any applicable regulations of the board. Any conditions placed upon a permit by the Department shall be enforceable to the same extent as a regulation of the Board.

Section 76-2-7 "K" NMSA 1978, provides that if the Division issues a permit with conditions, and if the applicant is dissatisfied with the action taken by the Division, the applicant may

request a hearing before the Albuquerque/Bernalillo County Air Quality Control Board. The request must be made in writing to the Director of the Environmental Health Department within thirty days after the receipt of the permit.

AQCR 20.09 provides that the Division may cancel this permit if the construction is not commenced within one year from the date of issuance, or if during the construction work is suspended for a total of one year.

AQCR 20.10 requires the permitted source to notify the Division in writing of:

A. The anticipated date of the initial start-up of a source not less than thirty days prior to the projected date;

B. actual date of initial start-up of a source within fifteen days after the start-up date;

C. change of owner or operator within fifteen (15) days of any such change, if any.

D. an updated emissions inventory for the source together with descriptions of any reconfigurations of process technology and air pollution control equipment, every two years from the date of issuance of this permit. A letter indicating that no such change has occurred, if such is the case, shall be sufficient to comply with this requirement.

AQCR 20.11 requires a performance test conducted within sixty days after achieving maximum production, but not later than 180 days after initial start-up. The department shall be notified at least two weeks prior to the test so that our observer can be present during the test. For the purposes of this permit the department is requesting 2 (two) tests of the emissions from this site. The first should be performed during the initial few days of operation to determine maximum emission potential and the second should be performed after the site has stabilized into its long-term emissions configuration.

The permit and conditions apply in the event of any change in control or ownership of the facility. In the event of any such change in control or ownership, the permittee should notify the succeeding owner of the permit and conditions.

Thank you very much for your cooperation with the Division. If you have any questions, please feel free to call me at 768-1957.

Approved and issued this 16th day of March, 1994.

Sincerely,

Roger A. Polisar
Environmental Health Specialist II
Air Pollution Control Division

RAP/gld
cc: File
Permit file
Reading file

APPENDIX C

SVE PILOT TEST EMISSION CALCULATIONS

ENGINEERING SCIENCE

1700 Broadway, Suite 900
Denver, CO. 80290

EPA METHOD TO-14 EMISSION CALCULATION SHEET
FOR THE
MAGNEHELIC GAUGE MEASURED IN INCHES OF H20

CLIENT: PSNM		JOB NO. 722445	CHECKED:
SHEET:		BY: JFH	AREA 1
DATE: 34548 9/2/94		REV:	FILE: PNMAREA1.XLS
SUBJECT:	INITIAL CARBON LOADING SAMPLE VW1		
COMMENTS:	DURATION 11 HRS		

	EMISSION RATE (lb/hr)	EMISSION RATE (lb/day)	EMISSION RATE (lb/yr)	EMISSION RATE (ton/yr)	TOTAL EMISSION (lbs)
Freon 12	0.000	0.000	0	0.0000	0.00
Freon 114	0.000	0.000	0	0.0000	0.00
Chloromethane	0.000	0.000	0	0.0000	0.00
Vinyl Chloride	0.000	0.000	0	0.0000	0.00
Bromomethane	0.000	0.000	0	0.0000	0.00
Chloroethane	0.000	0.000	0	0.0000	0.00
Freon 11	0.000	0.000	0	0.0000	0.00
1,1-Dichloroethene	0.097	2.317	846	0.4228	1.06
Freon 113	0.000	0.000	0	0.0000	0.00
Methylene Chloride	0.000	0.000	0	0.0000	0.00
1,1-Dichloroethane	0.000	0.000	0	0.0000	0.00
cis-1,2-Dichloroethene	0.000	0.000	0	0.0000	0.00
Chloroform	0.000	0.000	0	0.0000	0.00
1,1,1-Trichloroethane	0.403	9.682	3534	1.7670	4.44
Carbon Tetrachloride	0.000	0.000	0	0.0000	0.00
Benzene	0.000	0.000	0	0.0000	0.00
1,2-Dichloroethane	0.000	0.000	0	0.0000	0.00
Trichloroethene	0.000	0.000	0	0.0000	0.00
1,2-Dichloropropane	0.000	0.000	0	0.0000	0.00
cis-1,3-Dichloropropene	0.000	0.000	0	0.0000	0.00
Toluene	0.000	0.000	0	0.0000	0.00
trans-1,3-Dichloropropene	0.000	0.000	0	0.0000	0.00
1,1,2-Trichloroethane	0.000	0.000	0	0.0000	0.00
Tetrachloroethene	8.562	205.494	75005	37.5027	94.18
Ethylene Dibromide	0.000	0.000	0	0.0000	0.00
Chlorobenzene	0.000	0.000	0	0.0000	0.00
Ethyl Benzene	0.000	0.000	0	0.0000	0.00
m,p-Xylene	0.000	0.000	0	0.0000	0.00
o-Xylene	0.000	0.000	0	0.0000	0.00
Styrene	0.000	0.000	0	0.0000	0.00
1,1,2,2-Tetrachloroethane	0.000	0.000	0	0.0000	0.00
1,3,5-Trimethylbenzene	0.000	0.000	0	0.0000	0.00
1,2,4-Trimethylbenzene	0.032	0.777	283	0.1417	0.36
1,3-Dichlorobenzene	0.000	0.000	0	0.0000	0.00
1,4-Dichlorobenzene	0.000	0.000	0	0.0000	0.00
Chlorotoluene	0.000	0.000	0	0.0000	0.00
1,2-Dichlorobenzene	0.000	0.000	0	0.0000	0.00
1,2,4-Trichlorobenzene	0.000	0.000	0	0.0000	0.00
Hexachlorobutadiene	0.000	0.000	0	0.0000	0.00
BTEX	0.000	0.000	0	0.0000	0.00
TOTAL VOCs	9.095	218.27	79669	39.8343	100.04

ENGINEERING SCIENCE

1700 Broadway, Suite 900
Denver, CO. 80290

EPA METHOD TO-14 EMISSION CALCULATION SHEET
FOR THE
MAGNEHELIC GAUGE MEASURED IN INCHES OF H20

CLIENT: PSNM	JOB NO. 722445	CHECKED:
SHEET:	BY: JFH	AREA 1
DATE: 34548 9/2/94	REV:	FILE: PNMAREA1.XLS
SUBJECT:	INITIAL CARBON LOADING SAMPLE VW1	
COMMENTS:	DURATION 11 HRS	

EMISSION CALCULATIONS:

ASSUMPTIONS:
R = .0821 liter atm mole-1 K-1

FORMULAS:

Corrected Velocity Pressure (in. H2O) = Uncorrected Velocity Pressure (in. H2O) / Density Factor

Corrected Velocity (fpm) = Corrected Velocity Pressure (in H2O) x Pipe Dia. Factor x [Corrected Velocity Pressure]^1/2
Q (cfm) = Corrected Velocity (fpm) x Pipe Cross Sectional Area (ft^2)

RT (liter atm /mole) = .0821 (liter atm /mole K) x Temperature (K)

TVH (mg/L) = [Chm Conc (ppmV) x Chm MW (g/mole) x 1000 (mg/g) x 1 /10E6 (ppm)] / [RT (liter atm/mole)]
RATE (lb/hr) = TVH (mg/L) x Q (ft^3/min) x 60 (min/hr) x .02832 (m^3/ft^3) x 1000 (L/m^3) x 1 /453600 (lb/mg)

Temperature	75	Deg. F	23.9	Deg. C	296.9 Deg. K
Pipe ID:	3	in		Area	0.0491 ft^2
Uncorrected Measured Velocity Pressure:			1.56	inches of H2O	
Elevation:	5030	ft			
Density Factor d:			0.79	(from figure 6-14*)	
Pipe Dia. Factor:			0.9	(use .9 for pipe dia. < 4 in., use 1 for dia. > 4 in.)	

Corrected Velocity:	5065	fpm	
Q:	240	CFM	6796 l/min
RT:	24.4	liter atm mole-1	

DURATION OF EXTRACTION: 11 hrs.

* Attach Figure 6-14 to spreadsheet for magnehilic gauge calculations

Reference: INDUSTRIAL VENTILATION, From Chapter 41, Heating, Ventilating, Air Conditioning Guide, 1947 MADISON AND ELLIOT (26)

ENGINEERING SCIENCE
1700 Broadway, Suite 900
Denver, CO. 80290

EPA METHOD TO-14 EMISSION CALCULATION SHEET
FOR THE
MAGNEHELIC GAUGE MEASURED IN INCHES OF H20

CLIENT: PSNM	JOB NO. 722445	CHECKED:
SHEET:	BY: JFH	AREA 1
DATE: 34548 9/2/94	REV:	FILE: PNMAREA1.XLS
SUBJECT: INITIAL CARBON LOADING SAMPLE VW1		
COMMENTS: DURATION 11 HRS		

	Chemical Concentration (ppmV)	Molecular Weight (grams/mole)		Chemical Concentration (ppmV)	Molecular Weight (grams/mole)
Freon 12		120.9	Toluene		92.1
Freon 114		170.9	trans-1,3-Dichloropropene		111.0
Chloromethane		50.5	1,1,2-Trichloroethane		133.4
Vinyl Chloride		62.5	Tetrachloroethene	1400	165.8
Bromomethane		95.0	Ethylene Dibromide		187.9
Chloroethane		64.5	Chlorobenzene		112.6
Freon 11		137.4	Ethyl Benzene		106.2
1,1-Dichloroethene	27	96.9	m,p-Xylene		106.2
Freon 113		187.4	o-Xylene		106.2
Methylene Chloride		84.9	Styrene		104.2
1,1-Dichloroethane		99.0	1,1,2,2-Tetrachloroethane		167.9
cis-1,2-Dichloroethene		96.9	1,3,5-Trimethylbenzene		120.2
Chloroform		119.4	1,2,4-Trimethylbenzene	7.3	120.2
1,1,1-Trichloroethane	82	133.4	1,3-Dichlorobenzene		147.0
Carbon Tetrachloride		153.8	1,4-Dichlorobenzene		147.0
Benzene		78.1	Chlorotoluene		126.6
1,2-Dichloroethane		99.0	1,2-Dichlorobenzene		147.0
Trichloroethene		131.4	1,2,4-Trichlorobenzene		181.5
1,2-Dichloropropane		113.0	Hexachlorobutadiene		260.8
cis-1,3-Dichloropropene		111.0			

ENGINEERING SCIENCE
1700 Broadway, Suite 900
Denver, CO. 80290

EPA METHOD TO-14 EMISSION CALCULATION SHEET
FOR THE
MAGNEHELIC GAUGE MEASURED IN INCHES OF H20

CLIENT:	PSNM	JOB NO. 722445	CHECKED:
SHEET:		BY: JFH	AREA 2
DATE: 34579 9/2/94		REV:	FILE: PNMAREA2.XLS
SUBJECT:	CARBON LOADING SAMPLE VW2		
COMMENTS:	DURATION 23.5 HRS		

	EMISSION RATE (lb/hr)	EMISSION RATE (lb/day)	EMISSION RATE (lb/yr)	EMISSION RATE (ton/yr)	TOTAL EMISSION (lbs)
Freon 12	0.000	0.000	0	0.0000	0.00
Freon 114	0.000	0.000	0	0.0000	0.00
Chloromethane	0.000	0.000	0	0.0000	0.00
Vinyl Chloride	0.000	0.000	0	0.0000	0.00
Bromomethane	0.000	0.000	0	0.0000	0.00
Chloroethane	0.000	0.000	0	0.0000	0.00
Freon 11	0.000	0.000	0	0.0000	0.00
1,1-Dichloroethene	0.105	2.528	923	0.4613	2.48
Freon 113	0.000	0.000	0	0.0000	0.00
Methylene Chloride	0.000	0.000	0	0.0000	0.00
1,1-Dichloroethane	0.000	0.000	0	0.0000	0.00
cis-1,2-Dichloroethene	0.000	0.000	0	0.0000	0.00
Chloroform	0.000	0.000	0	0.0000	0.00
1,1,1-Trichloroethane	0.205	4.918	1795	0.8975	4.82
Carbon Tetrachloride	0.000	0.000	0	0.0000	0.00
Benzene	0.000	0.000	0	0.0000	0.00
1,2-Dichloroethane	0.000	0.000	0	0.0000	0.00
Trichloroethene	0.000	0.000	0	0.0000	0.00
1,2-Dichloropropane	0.000	0.000	0	0.0000	0.00
cis-1,3-Dichloropropene	0.000	0.000	0	0.0000	0.00
Toluene	0.000	0.000	0	0.0000	0.00
trans-1,3-Dichloropropene	0.000	0.000	0	0.0000	0.00
1,1,2-Trichloroethane	0.000	0.000	0	0.0000	0.00
Tetrachloroethene	5.467	131.217	47894	23.9471	128.48
Ethylene Dibromide	0.000	0.000	0	0.0000	0.00
Chlorobenzene	0.000	0.000	0	0.0000	0.00
Ethyl Benzene	0.000	0.000	0	0.0000	0.00
m,p-Xylene	0.000	0.000	0	0.0000	0.00
o-Xylene	0.000	0.000	0	0.0000	0.00
Styrene	0.000	0.000	0	0.0000	0.00
1,1,2,2-Tetrachloroethane	0.000	0.000	0	0.0000	0.00
1,3,5-Trimethylbenzene	0.000	0.000	0	0.0000	0.00
1,2,4-Trimethylbenzene	0.000	0.000	0	0.0000	0.00
1,3-Dichlorobenzene	0.000	0.000	0	0.0000	0.00
1,4-Dichlorobenzene	0.000	0.000	0	0.0000	0.00
Chlorotoluene	0.000	0.000	0	0.0000	0.00
1,2-Dichlorobenzene	0.000	0.000	0	0.0000	0.00
1,2,4-Trichlorobenzene	0.000	0.000	0	0.0000	0.00
Hexachlorobutadiene	0.000	0.000	0	0.0000	0.00
BTEX	0.000	0.000	0	0.0000	0.00
TOTAL VOCs	5.778	138.66	50612	25.3059	135.77

ENGINEERING SCIENCE
1700 Broadway, Suite 900
Denver, CO. 80290

EPA METHOD TO-14 EMISSION CALCULATION SHEET
FOR THE
MAGNEHELIC GAUGE MEASURED IN INCHES OF H20

CLIENT: PSNM	JOB NO. 722445	CHECKED:
SHEET:	BY: JFH	AREA 2
DATE: 34579 9/2/94	REV:	FILE: PNMAREA2.XLS
SUBJECT: CARBON LOADING SAMPLE VW2		
COMMENTS: DURATION 23.5 HRS		

EMISSION CALCULATIONS:

ASSUMPTIONS:
R = .0821 liter atm mole-1 K-1

FORMULAS:

Corrected Velocity Pressure (in. H2O) = Uncorrected Velocity Pressure (in. H2O) / Density Factor

Corrected Velocity (fpm) = Corrected Velocity Pressure (in H2O) x Pipe Dia. Factor x [Corrected Velocity Pressure]^1/2
Q (cfm) = Corrected Velocity (fpm) x Pipe Cross Sectional Area (ft^2)

RT (liter atm /mole) = .0821 (liter atm /mole K) x Temperature (K)

TVH (mg/L) = [Chm Conc (ppmV) x Chm MW (g/mole) x 1000 (mg/g) x 1 /10E6 (ppm)] / [RT (liter atm/mole)]
RATE (lb/hr) = TVH (mg/L) x Q (ft^3/min) x 60 (min/hr) x .02832 (m^3/ft^3) x 1000 (L/m^3) x 1 /453600 (lb/mg)

Temperatun 75 Deg. F 23.9 Deg. C 296.9 Deg. K
Pipe ID: 3 in Area 0.0491 ft^2
Uncorrected Measured Velocity Pressure: 1.5 inches of H2O
Elevation: 5030 ft
Density Factor d: 0.79 (from figure 6-14*)
Pipe Dia. Factor: 0.9 (use .9 for pipe dia. < 4 in., use 1 for dia. > 4 in.)

Corrected Velocity: 4967 fpm
Q: 244 CFM 6904 l/min
RT: 24.4 liter atm mole-1

DURATION OF EXTRACTION: 23.5 hrs.

* Attach Figure 6-14 to spreadsheet for magnehilic gauge calculations

Reference: INDUSTRIAL VENTILATION, From Chapter 41, Heating, Ventilating, Air Conditioning Guide, 1947 MADISON AND ELLIOT (26)

ENGINEERING SCIENCE
1700 Broadway, Suite 900
Denver, CO. 80290

EPA METHOD TO-14 EMISSION CALCULATION SHEET
FOR THE
MAGNEHELIC GAUGE MEASURED IN INCHES OF H20

CLIENT: PSNM		JOB NO. 722445	CHECKED:
SHEET:		BY: JFH	AREA 2
DATE: 34579 9/2/94		REV:	FILE: PNMAREA2.XLS
SUBJECT: CARBON LOADING SAMPLE VW2			
COMMENTS: DURATION 23.5 HRS			

	Chemical Concentration (ppmV)	Molecular Weight (grams/mole)		Chemical Concentration (ppmV)	Molecular Weight (grams/mole)
Freon 12		120.9	Toluene		92.1
Freon 114		170.9	trans-1,3-Dichloropropene		111.0
Chloromethane		50.5	1,1,2-Trichloroethane		133.4
Vinyl Chloride		62.5	Tetrachloroethene	880	165.8
Bromomethane		95.0	Ethylene Dibromide		187.9
Chloroethane		64.5	Chlorobenzene		112.6
Freon 11		137.4	Ethyl Benzene		106.2
1,1-Dichloroethene	29	96.9	m,p-Xylene		106.2
Freon 113		187.4	o-Xylene		106.2
Methylene Chloride		84.9	Styrene		104.2
1,1-Dichloroethane		99.0	1,1,2,2-Tetrachloroethane		167.9
cis-1,2-Dichloroethene		96.9	1,3,5-Trimethylbenzene		120.2
Chloroform		119.4	1,2,4-Trimethylbenzene		120.2
1,1,1-Trichloroethane	41	133.4	1,3-Dichlorobenzene		147.0
Carbon Tetrachloride		153.8	1,4-Dichlorobenzene		147.0
Benzene		78.1	Chlorotoluene		126.6
1,2-Dichloroethane		99.0	1,2-Dichlorobenzene		147.0
Trichloroethene		131.4	1,2,4-Trichlorobenzene		181.5
1,2-Dichloropropane		113.0	Hexachlorobutadiene		260.8
cis-1,3-Dichloropropene		111.0			

ENGINEERING SCIENCE
1700 Broadway, Suite 900
Denver, CO. 80290

EPA METHOD TO-14 EMISSION CALCULATION SHEET
FOR THE
MAGNEHELIC GAUGE MEASURED IN INCHES OF H20

CLIENT: PSNM	JOB NO. 722445		CHECKED:
SHEET:	BY: JFH		
DATE: 34579 9/2/94	REV:		FILE: PNMTO143.XLS
SUBJECT: CARBON LOADING SAMPLE VW3			
COMMENTS: DURATION 8/25 @ 08:30 - 8/25 @ 09:30 DURATION OF 1 HRS			

	EMISSION RATE (lb/hr)	EMISSION RATE (lb/day)	EMISSION RATE (lb/yr)	EMISSION RATE (ton/yr)	TOTAL EMISSION (lbs)
Freon 12	0.000	0.000	0	0.0000	0.00
Freon 114	0.000	0.000	0	0.0000	0.00
Chloromethane	0.000	0.000	0	0.0000	0.00
Vinyl Chloride	0.000	0.000	0	0.0000	0.00
Bromomethane	0.000	0.000	0	0.0000	0.00
Chloroethane	0.000	0.000	0	0.0000	0.00
Freon 11	0.000	0.000	0	0.0000	0.00
1,1-Dichloroethene	0.145	3.487	1273	0.6363	0.15
Freon 113	0.000	0.000	0	0.0000	0.00
Methylene Chloride	0.000	0.000	0	0.0000	0.00
1,1-Dichloroethane	0.000	0.000	0	0.0000	0.00
cis-1,2-Dichloroethene	0.000	0.000	0	0.0000	0.00
Chloroform	0.000	0.000	0	0.0000	0.00
1,1,1-Trichloroethane	0.225	5.398	1970	0.9851	0.22
Carbon Tetrachloride	0.000	0.000	0	0.0000	0.00
Benzene	0.000	0.000	0	0.0000	0.00
1,2-Dichloroethane	0.000	0.000	0	0.0000	0.00
Trichloroethene	0.000	0.000	0	0.0000	0.00
1,2-Dichloropropane	0.000	0.000	0	0.0000	0.00
cis-1,3-Dichloropropene	0.000	0.000	0	0.0000	0.00
Toluene	0.000	0.000	0	0.0000	0.00
trans-1,3-Dichloropropene	0.000	0.000	0	0.0000	0.00
1,1,2-Trichloroethane	0.000	0.000	0	0.0000	0.00
Tetrachloroethene	6.834	164.021	59868	29.9339	6.83
Ethylene Dibromide	0.000	0.000	0	0.0000	0.00
Chlorobenzene	0.000	0.000	0	0.0000	0.00
Ethyl Benzene	0.000	0.000	0	0.0000	0.00
m,p-Xylene	0.000	0.000	0	0.0000	0.00
o-Xylene	0.000	0.000	0	0.0000	0.00
Styrene	0.000	0.000	0	0.0000	0.00
1,1,2,2-Tetrachloroethane	0.000	0.000	0	0.0000	0.00
1,3,5-Trimethylbenzene	0.014	0.324	118	0.0592	0.01
1,2,4-Trimethylbenzene	0.024	0.584	213	0.1065	0.02
1,3-Dichlorobenzene	0.000	0.000	0	0.0000	0.00
1,4-Dichlorobenzene	0.000	0.000	0	0.0000	0.00
Chlorotoluene	0.000	0.000	0	0.0000	0.00
1,2-Dichlorobenzene	0.000	0.000	0	0.0000	0.00
1,2,4-Trichlorobenzene	0.000	0.000	0	0.0000	0.00
Hexachlorobutadiene	0.000	0.000	0	0.0000	0.00
BTEX	0.000	0.000	0	0.0000	0.00
TOTAL VOCs	7.242	173.81	63442	31.7210	7.24

ENGINEERING SCIENCE

1700 Broadway, Suite 900
Denver, CO. 80290

EPA METHOD TO-14 EMISSION CALCULATION SHEET
FOR THE
MAGNEHELIC GAUGE MEASURED IN INCHES OF H20

CLIENT: PSNM	JOB NO. 722445		CHECKED:
SHEET:	BY: JFH		
DATE: 34579 9/2/94	REV:		FILE: PNMTO143.XLS
SUBJECT: CARBON LOADING SAMPLE VW3			
COMMENTS: DURATION 8/25 @ 08:30 - 8/25 @ 09:30 DURATION OF 1 HRS			

	Chemical Concentration (ppmV)	Molecular Weight (grams/mole)
Freon 12		120.9
Freon 114		170.9
Chloromethane		50.5
Vinyl Chloride		62.5
Bromomethane		95.0
Chloroethane		64.5
Freon 11		137.4
1,1-Dichloroethene	40	96.9
Freon 113		187.4
Methylene Chloride		84.9
1,1-Dichloroethane		99.0
cis-1,2-Dichloroethene		96.9
Chloroform		119.4
1,1,1-Trichloroethane	45	133.4
Carbon Tetrachloride		153.8
Benzene		78.1
1,2-Dichloroethane		99.0
Trichloroethene		131.4
1,2-Dichloropropane		113.0
cis-1,3-Dichloropropene		111.0

	Chemical Concentration (ppmV)	Molecular Weight (grams/mole)
Toluene		92.1
trans-1,3-Dichloropropene		111.0
1,1,2-Trichloroethane		133.4
Tetrachloroethene	1100	165.8
Ethylene Dibromide		187.9
Chlorobenzene		112.6
Ethyl Benzene		106.2
m,p-Xylene		106.2
o-Xylene		106.2
Styrene		104.2
1,1,2,2-Tetrachloroethane		167.9
1,3,5-Trimethylbenzene	3	120.2
1,2,4-Trimethylbenzene	5.4	120.2
1,3-Dichlorobenzene		147.0
1,4-Dichlorobenzene		147.0
Chlorotoluene		126.6
1,2-Dichlorobenzene		147.0
1,2,4-Trichlorobenzene		181.5
Hexachlorobutadiene		260.8

ENGINEERING SCIENCE
1700 Broadway, Suite 900
Denver, CO. 80290

EPA METHOD TO-14 EMISSION CALCULATION SHEET
FOR THE
MAGNEHELIC GAUGE MEASURED IN INCHES OF H20

CLIENT:	PSNM	JOB NO. 722445	CHECKED:
SHEET:		BY: JFH	
DATE: 34579 9/21/94		REV:	FILE: PNMTO143.XLS
SUBJECT:	CARBON LOADING SAMPLE VW3		
COMMENTS:	DURATION 8/25 @ 08:30 - 8/25 @ 09:30 DURATION OF 1 HRS		

EMISSION CALCULATIONS:

ASSUMPTIONS:
R = .0821 liter atm mole-1 K-1

FORMULAS:

Corrected Velocity Pressure (in. H2O) = Uncorrected Velocity Pressure (in. H2O) / Density Factor

Corrected Velocity (fpm) = Corrected Velocity Pressure (in H2O) x Pipe Dia. Factor x [Corrected Velocity Pressure]^1/2
Q (cfm) = Corrected Velocity (fpm) x Pipe Cross Sectional Area (ft^2)

RT (liter atm /mole) = .0821 (liter atm /mole K) x Temperature (K)

TVH (mg/L) = [Chm Conc (ppmV) x Chm MW (g/mole) x 1000 (mg/g) x 1 /1OE6 (ppm)] / [RT (liter atm/mole)]
RATE (lb/hr) = TVH (mg/L) x Q (ft^3/min) x 60 (min/hr) x .02832 (m^3/ft^3) x 1000 (L/m^3) x 1 /453600 (lb/mg)

Temperature: 75 Deg. F 23.9 Deg. C 296.9 Deg. K
Pipe ID: 3 in Area 0.0491 ft^2
Uncorrected Measured Velocity Pressure: 1.5 inches of H2O
Elevation: 5030 ft
Density Factor d: 0.79 (from figure 6-14*)
Pipe Dia. Factor: 0.9 (use .9 for pipe dia. < 4 in., use 1 for dia. > 4 in.)

Corrected Velocity: 4967 fpm
Q: 244 CFM 6904 l/min
RT: 24.4 liter atm mole-1

DURATION OF EXTRACTION: 1 hrs.

* Attach Figure 6-14 to spreadsheet for magnehilic gauge calculations

Reference: INDUSTRIAL VENTILATION, From Chapter 41, Heating, Ventilating, Air Conditioning Guide, 1947 MADISON AND ELLIOT (26)

ENGINEERING SCIENCE

1700 Broadway, Suite 900
Denver, CO. 80290

EPA METHOD TO-14 EMISSION CALCULATION SHEET
FOR THE
MAGNEHELIC GAUGE MEASURED IN INCHES OF H20

CLIENT: PSNM	JOB NO. 722445	CHECKED:
SHEET:	BY: JFH	
DATE: 34579 9/2/94	REV:	FILE: PNMGAC3.XLS
SUBJECT: VOC EMISSIONS SAMPLE GAC3		
COMMENTS: DURATION 8/25 @ 08:30 - 8/25 @ 09:30 DURATION OF 1 HRS		

	EMISSION RATE (lb/hr)	EMISSION RATE (lb/day)	EMISSION RATE (lb/yr)	EMISSION RATE (ton/yr)	TOTAL EMISSION (lbs)
Freon 12	0.000	0.000	0	0.0000	0.00
Freon 114	0.000	0.000	0	0.0000	0.00
Chloromethane	0.000	0.000	0	0.0000	0.00
Vinyl Chloride	0.000	0.000	0	0.0000	0.00
Bromomethane	0.000	0.000	0	0.0000	0.00
Chloroethane	0.000	0.000	0	0.0000	0.00
Freon 11	0.000	0.000	0	0.0000	0.00
1,1-Dichloroethene	0.218	5.230	1909	0.9545	0.22
Freon 113	0.000	0.000	0	0.0000	0.00
Methylene Chloride	0.000	0.000	0	0.0000	0.00
1,1-Dichloroethane	0.000	0.000	0	0.0000	0.00
cis-1,2-Dichloroethene	0.000	0.000	0	0.0000	0.00
Chloroform	0.005	0.129	47	0.0235	0.01
1,1,1-Trichloroethane	0.600	14.394	5254	2.6269	0.60
Carbon Tetrachloride	0.000	0.000	0	0.0000	0.00
Benzene	0.000	0.000	0	0.0000	0.00
1,2-Dichloroethane	0.000	0.000	0	0.0000	0.00
Trichloroethene	0.008	0.189	69	0.0345	0.01
1,2-Dichloropropane	0.000	0.000	0	0.0000	0.00
cis-1,3-Dichloropropene	0.000	0.000	0	0.0000	0.00
Toluene	0.000	0.000	0	0.0000	0.00
trans-1,3-Dichloropropene	0.000	0.000	0	0.0000	0.00
1,1,2-Trichloroethane	0.000	0.000	0	0.0000	0.00
Tetrachloroethene	2.112	50.697	18505	9.2523	2.11
Ethylene Dibromide	0.000	0.000	0	0.0000	0.00
Chlorobenzene	0.000	0.000	0	0.0000	0.00
Ethyl Benzene	0.000	0.000	0	0.0000	0.00
m,p-Xylene	0.000	0.000	0	0.0000	0.00
o-Xylene	0.000	0.000	0	0.0000	0.00
Styrene	0.000	0.000	0	0.0000	0.00
1,1,2,2-Tetrachloroethane	0.000	0.000	0	0.0000	0.00
1,3,5-Trimethylbenzene	0.000	0.000	0	0.0000	0.00
1,2,4-Trimethylbenzene	0.000	0.000	0	0.0000	0.00
1,3-Dichlorobenzene	0.000	0.000	0	0.0000	0.00
1,4-Dichlorobenzene	0.000	0.000	0	0.0000	0.00
Chlorotoluene	0.000	0.000	0	0.0000	0.00
1,2-Dichlorobenzene	0.000	0.000	0	0.0000	0.00
1,2,4-Trichlorobenzene	0.000	0.000	0	0.0000	0.00
Hexachlorobutadiene	0.000	0.000	0	0.0000	0.00
BTEX	0.000	0.000	0	0.0000	0.00
TOTAL VOCs	2.943	70.64	25783	12.8917	2.94

ENGINEERING SCIENCE
1700 Broadway, Suite 900
Denver, CO. 80290

EPA METHOD TO-14 EMISSION CALCULATION SHEET
FOR THE
MAGNEHELIC GAUGE MEASURED IN INCHES OF H20

CLIENT:	PSNM	JOB NO. 722445	CHECKED:
SHEET:		BY: JFH	
DATE: 34579 9/2/94		REV:	FILE: PNMGAC3.XLS
SUBJECT:	VOC EMISSIONS SAMPLE GAC3		
COMMENTS:	DURATION 8/25 @ 08:30 - 8/25 @ 09:30 DURATION OF 1 HRS		

	Chemical Concentration (ppmV)	Molecular Weight (grams/mole)		Chemical Concentration (ppmV)	Molecular Weight (grams/mole)
Freon 12		120.9	Toluene		92.1
Freon 114		170.9	trans-1,3-Dichloropropene		111.0
Chloromethane		50.5	1,1,2-Trichloroethane		133.4
Vinyl Chloride		62.5	Tetrachloroethene	340	165.8
Bromomethane		95.0	Ethylene Dibromide		187.9
Chloroethane		64.5	Chlorobenzene		112.6
Freon 11		137.4	Ethyl Benzene		106.2
1,1-Dichloroethene	60	96.9	m,p-Xylene		106.2
Freon 113		187.4	o-Xylene		106.2
Methylene Chloride		84.9	Styrene		104.2
1,1-Dichloroethane		99.0	1,1,2,2-Tetrachloroethane		167.9
cis-1,2-Dichloroethene		96.9	1,3,5-Trimethylbenzene	0	120.2
Chloroform	1.2	119.4	1,2,4-Trimethylbenzene	0	120.2
1,1,1-Trichloroethane	120	133.4	1,3-Dichlorobenzene		147.0
Carbon Tetrachloride		153.8	1,4-Dichlorobenzene		147.0
Benzene		78.1	Chlorotoluene		126.6
1,2-Dichloroethane		99.0	1,2-Dichlorobenzene		147.0
Trichloroethene	1.6	131.4	1,2,4-Trichlorobenzene		181.5
1,2-Dichloropropane		113.0	Hexachlorobutadiene		260.8
cis-1,3-Dichloropropene		111.0			

ENGINEERING SCIENCE
1700 Broadway, Suite 900
Denver, CO. 80290

EPA METHOD TO-14 EMISSION CALCULATION SHEET
FOR THE
MAGNEHELIC GAUGE MEASURED IN INCHES OF H20

CLIENT:	PSNM	JOB NO. 722445		CHECKED:
SHEET:		BY: JFH		
DATE: 34579 9/2/94		REV:		FILE: PNMGAC3.XLS
SUBJECT:	VOC EMISSIONS SAMPLE GAC3			
COMMENTS:	DURATION 8/25 @ 08:30 - 8/25 @ 09:30 DURATION OF 1 HRS			

EMISSION CALCULATIONS:

ASSUMPTIONS:
R = .0821 liter atm mole-1 K-1

FORMULAS:

Corrected Velocity Pressure (in. H2O) = Uncorrected Velocity Pressure (in. H2O) / Density Factor

Corrected Velocity (fpm) = Corrected Velocity Pressure (in H2O) x Pipe Dia. Factor x [Corrected Velocity Pressure]^1/2
Q (cfm) = Corrected Velocity (fpm) x Pipe Cross Sectional Area (ft^2)

RT (liter atm /mole) = .0821 (liter atm /mole K) x Temperature (K)

TVH (mg/L) = [Chm Conc (ppmV) x Chm MW (g/mole) x 1000 (mg/g) x 1 /10E6 (ppm)] / [RT (liter atm/mole)]
RATE (lb/hr) = TVH (mg/L) x Q (ft^3/min) x 60 (min/hr) x .02832 (m^3/ft^3) x 1000 (L/m^3) x 1 /453600 (lb/mg)

Temperature: 75 Deg. F 23.9 Deg. C 296.9 Deg. K
Pipe ID: 3 in Area 0.0491 ft^2
Uncorrected Measured Velocity Pressure: 1.5 inches of H2O
Elevation: 5030 ft
Density Factor d: 0.79 (from figure 6-14*)
Pipe Dia. Factor: 0.9 (use .9 for pipe dia. < 4 in., use 1 for dia. > 4 in.)

Corrected Velocity: 4967 fpm
Q: 244 CFM 6904 l/min
RT: 24.4 liter atm mole-1

DURATION OF EXTRACTION: 1 hrs.

* Attach Figure 6-14 to spreadsheet for magnehilic gauge calculations

Reference: INDUSTRIAL VENTILATION, From Chapter 41, Heating, Ventilating, Air Conditioning Guide, 1947 MADISON AND ELLIOT (26)

APPENDIX D

SVE PILOT TEST LABORATORY AND ANALYTICAL RESULTS

AIR TOXICS LTD.

SAMPLE NAME: GAC-1
ID#: 9408213-02A
EPA METHOD TO-14 GC/MS Full Scan

File Name:	5082414	**Date of Collection:**	8/23/94
Dil. Factor:	9.7	**Date of Analysis:**	8/24/94

Compound	Det. Limit (ppbv)	Amount (ppbv)
Freon 12	4.9	Not Detected
Freon 114	4.9	Not Detected
Chloromethane	4.9	Not Detected
Vinyl Chloride	4.9	Not Detected
Bromomethane	4.9	Not Detected
Chloroethane	4.9	Not Detected
Freon 11	4.9	Not Detected
1,1-Dichloroethene	4.9	Not Detected
Freon 113	4.9	Not Detected
Methylene Chloride	4.9	Not Detected
1,1-Dichloroethane	4.9	Not Detected
cis-1,2-Dichloroethene	4.9	Not Detected
Chloroform	4.9	Not Detected
1,1,1-Trichloroethane	4.9	Not Detected
Carbon Tetrachloride	4.9	Not Detected
Benzene	4.9	Not Detected
1,2-Dichloroethane	4.9	Not Detected
Trichloroethene	4.9	Not Detected
1,2-Dichloropropane	4.9	Not Detected
cis-1,3-Dichloropropene	4.9	Not Detected
Toluene	4.9	Not Detected
trans-1,3-Dichloropropene	4.9	Not Detected
1,1,2-Trichloroethane	4.9	Not Detected
Tetrachloroethene	4.9	84
Ethylene Dibromide	4.9	Not Detected
Chlorobenzene	4.9	Not Detected
Ethyl Benzene	4.9	Not Detected
m,p-Xylene	4.9	Not Detected
o-Xylene	4.9	Not Detected
Styrene	4.9	Not Detected
1,1,2,2-Tetrachloroethane	4.9	Not Detected
1,3,5-Trimethylbenzene	4.9	Not Detected
1,2,4-Trimethylbenzene	4.9	Not Detected
1,3-Dichlorobenzene	4.9	Not Detected
1,4-Dichlorobenzene	4.9	Not Detected
Chlorotoluene	4.9	Not Detected
1,2-Dichlorobenzene	4.9	Not Detected
1,2,4-Trichlorobenzene	4.9	Not Detected
Hexachlorobutadiene	4.9	Not Detected

Container Type: 1 Liter SUMMA Canister

AIR TOXICS LTD.

SAMPLE NAME: PSNM3-1
ID#: 9408213-03A
EPA METHOD TO-14 GC/MS Full Scan

File Name:	5082415	**Date of Collection:**	8/23/94
Dil. Factor:	4800	**Date of Analysis:**	8/24/94

Compound	Det. Limit (ppbv)	Amount (ppbv)
Freon 12	2400	Not Detected
Freon 114	2400	Not Detected
Chloromethane	2400	Not Detected
Vinyl Chloride	2400	Not Detected
Bromomethane	2400	Not Detected
Chloroethane	2400	Not Detected
Freon 11	2400	Not Detected
1,1-Dichloroethene	2400	66000
Freon 113	2400	Not Detected
Methylene Chloride	2400	Not Detected
1,1-Dichloroethane	2400	Not Detected
cis-1,2-Dichloroethene	2400	Not Detected
Chloroform	2400	Not Detected
1,1,1-Trichloroethane	2400	69000
Carbon Tetrachloride	2400	Not Detected
Benzene	2400	Not Detected
1,2-Dichloroethane	2400	Not Detected
Trichloroethene	2400	Not Detected
1,2-Dichloropropane	2400	Not Detected
cis-1,3-Dichloropropene	2400	Not Detected
Toluene	2400	Not Detected
trans-1,3-Dichloropropene	2400	Not Detected
1,1,2-Trichloroethane	2400	Not Detected
Tetrachloroethene	2400	570000
Ethylene Dibromide	2400	Not Detected
Chlorobenzene	2400	Not Detected
Ethyl Benzene	2400	Not Detected
m,p-Xylene	2400	Not Detected
o-Xylene	2400	Not Detected
Styrene	2400	Not Detected
1,1,2,2-Tetrachloroethane	2400	Not Detected
1,3,5-Trimethylbenzene	2400	Not Detected
1,2,4-Trimethylbenzene	2400	Not Detected
1,3-Dichlorobenzene	2400	Not Detected
1,4-Dichlorobenzene	2400	Not Detected
Chlorotoluene	2400	Not Detected
1,2-Dichlorobenzene	2400	Not Detected
1,2,4-Trichlorobenzene	2400	Not Detected
Hexachlorobutadiene	2400	Not Detected

Container Type: 1 Liter SUMMA Canister

AIR TOXICS LTD.

SAMPLE NAME: SG1-1
ID#: 9408213-04A
EPA METHOD TO-14 GC/MS Full Scan

File Name:	5082416	**Date of Collection:**	8/23/94
Dil. Factor:	770	**Date of Analysis:**	8/24/94

Compound	Det. Limit (ppbv)	Amount (ppbv)
Freon 12	390	Not Detected
Freon 114	390	Not Detected
Chloromethane	390	Not Detected
Vinyl Chloride	390	Not Detected
Bromomethane	390	Not Detected
Chloroethane	390	Not Detected
Freon 11	390	Not Detected
1,1-Dichloroethene	390	1800
Freon 113	390	Not Detected
Methylene Chloride	390	Not Detected
1,1-Dichloroethane	390	Not Detected
cis-1,2-Dichloroethene	390	Not Detected
Chloroform	390	Not Detected
1,1,1-Trichloroethane	390	5700
Carbon Tetrachloride	390	Not Detected
Benzene	390	Not Detected
1,2-Dichloroethane	390	Not Detected
Trichloroethene	390	Not Detected
1,2-Dichloropropane	390	Not Detected
cis-1,3-Dichloropropene	390	Not Detected
Toluene	390	Not Detected
trans-1,3-Dichloropropene	390	Not Detected
1,1,2-Trichloroethane	390	Not Detected
Tetrachloroethene	390	100000
Ethylene Dibromide	390	Not Detected
Chlorobenzene	390	Not Detected
Ethyl Benzene	390	Not Detected
m,p-Xylene	390	Not Detected
o-Xylene	390	Not Detected
Styrene	390	Not Detected
1,1,2,2-Tetrachloroethane	390	Not Detected
1,3,5-Trimethylbenzene	390	Not Detected
1,2,4-Trimethylbenzene	390	Not Detected
1,3-Dichlorobenzene	390	Not Detected
1,4-Dichlorobenzene	390	Not Detected
Chlorotoluene	390	Not Detected
1,2-Dichlorobenzene	390	Not Detected
1,2,4-Trichlorobenzene	390	Not Detected
Hexachlorobutadiene	390	Not Detected

Container Type: 1 Liter SUMMA Canister

AIR TOXICS LTD.

SAMPLE NAME: Lab Blank
ID#: 9408213-05A
EPA METHOD TO-14 GC/MS Full Scan

File Name:	5082406	**Date of Collection:**	NA
Dil. Factor:	1.0	**Date of Analysis:**	8/24/94

Compound	Det. Limit (ppbv)	Amount (ppbv)
Freon 12	0.50	Not Detected
Freon 114	0.50	Not Detected
Chloromethane	0.50	Not Detected
Vinyl Chloride	0.50	Not Detected
Bromomethane	0.50	Not Detected
Chloroethane	0.50	Not Detected
Freon 11	0.50	Not Detected
1,1-Dichloroethene	0.50	Not Detected
Freon 113	0.50	Not Detected
Methylene Chloride	0.50	Not Detected
1,1-Dichloroethane	0.50	Not Detected
cis-1,2-Dichloroethene	0.50	Not Detected
Chloroform	0.50	Not Detected
1,1,1-Trichloroethane	0.50	Not Detected
Carbon Tetrachloride	0.50	Not Detected
Benzene	0.50	Not Detected
1,2-Dichloroethane	0.50	Not Detected
Trichloroethene	0.50	Not Detected
1,2-Dichloropropane	0.50	Not Detected
cis-1,3-Dichloropropene	0.50	Not Detected
Toluene	0.50	Not Detected
trans-1,3-Dichloropropene	0.50	Not Detected
1,1,2-Trichloroethane	0.50	Not Detected
Tetrachloroethene	0.50	Not Detected
Ethylene Dibromide	0.50	Not Detected
Chlorobenzene	0.50	Not Detected
Ethyl Benzene	0.50	Not Detected
m,p-Xylene	0.50	Not Detected
o-Xylene	0.50	Not Detected
Styrene	0.50	Not Detected
1,1,2,2-Tetrachloroethane	0.50	Not Detected
1,3,5-Trimethylbenzene	0.50	Not Detected
1,2,4-Trimethylbenzene	0.50	Not Detected
1,3-Dichlorobenzene	0.50	Not Detected
1,4-Dichlorobenzene	0.50	Not Detected
Chlorotoluene	0.50	Not Detected
1,2-Dichlorobenzene	0.50	Not Detected
1,2,4-Trichlorobenzene	0.50	Not Detected
Hexachlorobutadiene	0.50	Not Detected

Container Type: NA

AIR TOXICS LTD.
AN ENVIRONMENTAL ANALYTICAL LABORATORY

180 BLUE RAVINE ROAD, SUITE B
FOLSOM, CA 95630-4719
(916) 985-1000 FAX: (916) 985-1020

No 001660

CHAIN-OF-CUSTODY RECORD

Contact Person: John Hall
Company: Engineering - Science Inc
Address: 1700 Broadway #900 City: Denver State: CO Zip: 80290
Phone: (303) 831-8100 FAX: (303) 831 8208

Project info:
P.O. # 722445.01000
Project # 722445.01000
Project Name: PSNM-Person

Turn Around Time:
☐ Normal
☒ Rush 24-48 Specify

Lab I.D.	Field Sample I.D.	Date & Time	Analyses Requested	Canister Pressure / Vacuum Initial	Final	Receipt
01A	VW-1	8/23/94 11:25	TO-14 Canister 11628			5.0" Hg
02A	GAC-1	8/23/94 11:27	TO-14 Canister 9472			5.0" Hg
03A	PSNM3-1	8/23/94 08:40	TO-14 9473			5.0" Hg
04A	SG1-1	8/23/94 08:46	TO-14 12807			5.5" Hg

Collected By: Print: John Hall Signature: John Hall

Relinquished By: (Signature) Date/Time: John Hall 8/23/94 16:00
Received By: (Signature) Date/Time: Fed Ex 8/23/94 16:00 #1968962181

Relinquished By: (Signature) Date/Time:
Received By: (Signature) Date/Time:

Relinquished By: (Signature) Date/Time:
Received By: (Signature) Date/Time: 0955 8/24/94

Notes: Fax Results to Gary Baker (505) 877-3396
HARD Copy to John Hall - Grand Jct. CO 635 MEADOWOOD ST 81504
Bill - Denver Address

Lab Use Only	Shipper Name	Air Bill #	Opened By:	Date/Time	Temp. (°C)	Condition	Custody Seals Intact?	Work Order #
	FED EX	1968962181	TAS	8/24/94 0955	ROOM	GOOD	Yes No (None)	

Form 1293 rev. 05

AIR TOXICS LTD.

SAMPLE NAME: VW-2
ID#: 9408224-01A
EPA METHOD TO-14 GC/MS Full Scan

File Name:	5082512	**Date of Collection:**	8/24/94
Dil. Factor:	9700	**Date of Analysis:**	8/25/94

Compound	Det. Limit (ppbv)	Amount (ppbv)
Freon 12	4900	Not Detected
Freon 114	4900	Not Detected
Chloromethane	4900	Not Detected
Vinyl Chloride	4900	Not Detected
Bromomethane	4900	Not Detected
Chloroethane	4900	Not Detected
Freon 11	4900	Not Detected
1,1-Dichloroethene	4900	29000
Freon 113	4900	Not Detected
Methylene Chloride	4900	Not Detected
1,1-Dichloroethane	4900	Not Detected
cis-1,2-Dichloroethene	4900	Not Detected
Chloroform	4900	Not Detected
1,1,1-Trichloroethane	4900	41000
Carbon Tetrachloride	4900	Not Detected
Benzene	4900	Not Detected
1,2-Dichloroethane	4900	Not Detected
Trichloroethene	4900	Not Detected
1,2-Dichloropropane	4900	Not Detected
cis-1,3-Dichloropropene	4900	Not Detected
Toluene	4900	Not Detected
trans-1,3-Dichloropropene	4900	Not Detected
1,1,2-Trichloroethane	4900	Not Detected
Tetrachloroethene	4900	880000
Ethylene Dibromide	4900	Not Detected
Chlorobenzene	4900	Not Detected
Ethyl Benzene	4900	Not Detected
m,p-Xylene	4900	Not Detected
o-Xylene	4900	Not Detected
Styrene	4900	Not Detected
1,1,2,2-Tetrachloroethane	4900	Not Detected
1,3,5-Trimethylbenzene	4900	Not Detected
1,2,4-Trimethylbenzene	4900	Not Detected
1,3-Dichlorobenzene	4900	Not Detected
1,4-Dichlorobenzene	4900	Not Detected
Chlorotoluene	4900	Not Detected
1,2-Dichlorobenzene	4900	Not Detected
1,2,4-Trichlorobenzene	4900	Not Detected
Hexachlorobutadiene	4900	Not Detected

Container Type: 1 Liter SUMMA Canister

AIR TOXICS LTD.

SAMPLE NAME: GAC-2
ID#: 9408224-02A
EPA METHOD TO-14 GC/MS Full Scan

File Name:	5082513	**Date of Collection:**	8/24/94
Dil. Factor:	10	**Date of Analysis:**	8/25/94

Compound	Det. Limit (ppbv)	Amount (ppbv)
Freon 12	5.0	Not Detected
Freon 114	5.0	Not Detected
Chloromethane	5.0	Not Detected
Vinyl Chloride	5.0	Not Detected
Bromomethane	5.0	Not Detected
Chloroethane	5.0	Not Detected
Freon 11	5.0	Not Detected
1,1-Dichloroethene	5.0	Not Detected
Freon 113	5.0	Not Detected
Methylene Chloride	5.0	Not Detected
1,1-Dichloroethane	5.0	Not Detected
cis-1,2-Dichloroethene	5.0	Not Detected
Chloroform	5.0	Not Detected
1,1,1-Trichloroethane	5.0	Not Detected
Carbon Tetrachloride	5.0	Not Detected
Benzene	5.0	Not Detected
1,2-Dichloroethane	5.0	Not Detected
Trichloroethene	5.0	Not Detected
1,2-Dichloropropane	5.0	Not Detected
cis-1,3-Dichloropropene	5.0	Not Detected
Toluene	5.0	Not Detected
trans-1,3-Dichloropropene	5.0	Not Detected
1,1,2-Trichloroethane	5.0	Not Detected
Tetrachloroethene	5.0	Not Detected
Ethylene Dibromide	5.0	Not Detected
Chlorobenzene	5.0	Not Detected
Ethyl Benzene	5.0	Not Detected
m,p-Xylene	5.0	Not Detected
o-Xylene	5.0	Not Detected
Styrene	5.0	Not Detected
1,1,2,2-Tetrachloroethane	5.0	Not Detected
1,3,5-Trimethylbenzene	5.0	Not Detected
1,2,4-Trimethylbenzene	5.0	Not Detected
1,3-Dichlorobenzene	5.0	Not Detected
1,4-Dichlorobenzene	5.0	Not Detected
Chlorotoluene	5.0	Not Detected
1,2-Dichlorobenzene	5.0	Not Detected
1,2,4-Trichlorobenzene	5.0	Not Detected
Hexachlorobutadiene	5.0	Not Detected

Container Type: 1 Liter SUMMA Canister

AIR TOXICS LTD.

SAMPLE NAME: Lab Blank
ID#: 9408224-03A
EPA METHOD TO-14 GC/MS Full Scan

File Name:	5082510	**Date of Collection:**	NA
Dil. Factor:	1.0	**Date of Analysis:**	8/25/94

Compound	Det. Limit (ppbv)	Amount (ppbv)
Freon 12	0.50	Not Detected
Freon 114	0.50	Not Detected
Chloromethane	0.50	Not Detected
Vinyl Chloride	0.50	Not Detected
Bromomethane	0.50	Not Detected
Chloroethane	0.50	Not Detected
Freon 11	0.50	Not Detected
1,1-Dichloroethene	0.50	Not Detected
Freon 113	0.50	Not Detected
Methylene Chloride	0.50	Not Detected
1,1-Dichloroethane	0.50	Not Detected
cis-1,2-Dichloroethene	0.50	Not Detected
Chloroform	0.50	Not Detected
1,1,1-Trichloroethane	0.50	Not Detected
Carbon Tetrachloride	0.50	Not Detected
Benzene	0.50	Not Detected
1,2-Dichloroethane	0.50	Not Detected
Trichloroethene	0.50	Not Detected
1,2-Dichloropropane	0.50	Not Detected
cis-1,3-Dichloropropene	0.50	Not Detected
Toluene	0.50	Not Detected
trans-1,3-Dichloropropene	0.50	Not Detected
1,1,2-Trichloroethane	0.50	Not Detected
Tetrachloroethene	0.50	Not Detected
Ethylene Dibromide	0.50	Not Detected
Chlorobenzene	0.50	Not Detected
Ethyl Benzene	0.50	Not Detected
m,p-Xylene	0.50	Not Detected
o-Xylene	0.50	Not Detected
Styrene	0.50	Not Detected
1,1,2,2-Tetrachloroethane	0.50	Not Detected
1,3,5-Trimethylbenzene	0.50	Not Detected
1,2,4-Trimethylbenzene	0.50	Not Detected
1,3-Dichlorobenzene	0.50	Not Detected
1,4-Dichlorobenzene	0.50	Not Detected
Chlorotoluene	0.50	Not Detected
1,2-Dichlorobenzene	0.50	Not Detected
1,2,4-Trichlorobenzene	0.50	Not Detected
Hexachlorobutadiene	0.50	Not Detected

Container Type: NA

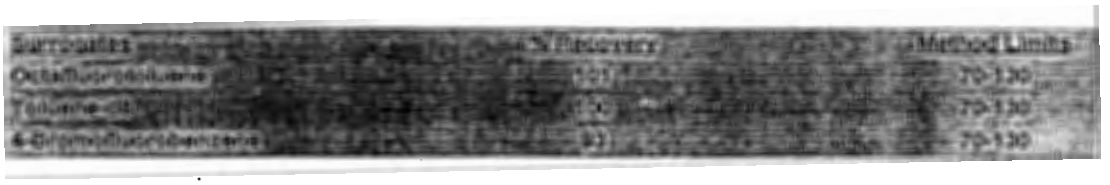

@ AIR TOXICS LTD.
AN ENVIRONMENTAL ANALYTICAL LABORATORY

180 BLUE RAVINE ROAD, SUITE B
FOLSOM, CA 95630-4719
(916) 985-1000 FAX: (916) 985-1020

№ 001664

CHAIN-OF-CUSTODY RECORD

Contact Person JOHN HALL
Company ENGINEERING-SCIENCE, INC
Address ~~DENVER~~ 1700 BROADWAY City ~~CO~~ DENVER State CO Zip 80290
Phone 303 831-8100 FAX (303) 831-8208

Project info:
P.O. # 722445.01000
Project # 722445.01000
Project Name PSNM-PERSON

Turn Around Time:
☒ Normal
☒ Rush 24 hr
Specify

Lab I.D.	Field Sample I.D.	Date & Time	Analyses Requested		Canister Pressure / Vacuum Initial	Final	Receipt
01A	VW-2	8/24/94 0828	TO-14	Con. No 11825 RUSH			5.0"Hg
02A	GAC-2	8/24/94 0840	TO-14	11822 RUSH			6.0"Hg
	BAC-1	8/24/94 0846	TO-14	13897 Normal			
	EB-1	8/24/94 0850	TO-14	9493 Normal			

Collected By: Print JOHN HALL Signature John Hall

Relinquished By: (Signature) Date/Time J. Hall 8/24/94 18:00
Received By: (Signature) Date/Time Fed Ex #1968962192 8/24/94 18:00

Relinquished By: (Signature) Date/Time
Received By: (Signature) Date/Time

Relinquished By: (Signature) Date/Time
Received By: (Signature) Date/Time 1015 ATL 8/25/94

Notes: Fax Results to Gary Baker (505) 877-3396

Hard Copy JOHN HALL
635 MEADOWOOD ST.
GRAND JUNCTION, CO 81504

Billing - Denver Address

Lab Use Only

Shipper Name	Air Bill #	Opened By:	Date/Time	Temp. (°C)	Condition	Custody Seals Intact?	Work Order #
FED. EX.	1968962192	TBS.	8/25/94 1015	ROOM	GOOD	Yes No None	9408224

Form 1293 rev. 05

AIR TOXICS LTD.

SAMPLE NAME: VW-3
ID#: 9408239-01A
EPA METHOD TO-14 GC/MS Full Scan

File Name:	1082817	**Date of Collection:**	8/25/94
Dil. Factor:	6000	**Date of Analysis:**	8/28/94

Compound	Det. Limit (ppbv)	Amount (ppbv)
Freon 12	3000	Not Detected
Freon 114	3000	Not Detected
Chloromethane	3000	Not Detected
Vinyl Chloride	3000	Not Detected
Bromomethane	3000	Not Detected
Chloroethane	3000	Not Detected
Freon 11	3000	Not Detected
1,1-Dichloroethene	3000	40000
Freon 113	3000	Not Detected
Methylene Chloride	3000	Not Detected
1,1-Dichloroethane	3000	Not Detected
cis-1,2-Dichloroethene	3000	Not Detected
Chloroform	3000	Not Detected
1,1,1-Trichloroethane	3000	45000
Carbon Tetrachloride	3000	Not Detected
Benzene	3000	Not Detected
1,2-Dichloroethane	3000	Not Detected
Trichloroethene	3000	Not Detected
1,2-Dichloropropane	3000	Not Detected
cis-1,3-Dichloropropene	3000	Not Detected
Toluene	3000	Not Detected
trans-1,3-Dichloropropene	3000	Not Detected
1,1,2-Trichloroethane	3000	Not Detected
Tetrachloroethene	3000	1100000 E
Ethylene Dibromide	3000	Not Detected
Chlorobenzene	3000	Not Detected
Ethyl Benzene	3000	Not Detected
m,p-Xylene	3000	Not Detected
o-Xylene	3000	Not Detected
Styrene	3000	Not Detected
1,1,2,2-Tetrachloroethane	3000	Not Detected
1,3,5-Trimethylbenzene	3000	3000
1,2,4-Trimethylbenzene	3000	5400
1,3-Dichlorobenzene	3000	Not Detected
1,4-Dichlorobenzene	3000	Not Detected
Chlorotoluene	3000	Not Detected
1,2-Dichlorobenzene	3000	Not Detected
1,2,4-Trichlorobenzene	3000	Not Detected
Hexachlorobutadiene	3000	Not Detected

E = Exceeds instrument calibration range, but within linear range.
Container Type: 1 Liter SUMMA Canister

AIR TOXICS LTD.

SAMPLE NAME: GAC-3
ID#: 9408239-02A
EPA METHOD TO-14 GC/MS Full Scan

File Name:	1082818	**Date of Collection:**	8/25/94
Dil. Factor:	2400	**Date of Analysis:**	8/28/94

Compound	Det. Limit (ppbv)	Amount (ppbv)
Freon 12	1200	Not Detected
Freon 114	1200	Not Detected
Chloromethane	1200	Not Detected
Vinyl Chloride	1200	Not Detected
Bromomethane	1200	Not Detected
Chloroethane	1200	Not Detected
Freon 11	1200	Not Detected
1,1-Dichloroethene	1200	60000
Freon 113	1200	Not Detected
Methylene Chloride	1200	Not Detected
1,1-Dichloroethane	1200	Not Detected
cis-1,2-Dichloroethene	1200	Not Detected
Chloroform	1200	1200
1,1,1-Trichloroethane	1200	120000
Carbon Tetrachloride	1200	Not Detected
Benzene	1200	Not Detected
1,2-Dichloroethane	1200	Not Detected
Trichloroethene	1200	1600
1,2-Dichloropropane	1200	Not Detected
cis-1,3-Dichloropropene	1200	Not Detected
Toluene	1200	Not Detected
trans-1,3-Dichloropropene	1200	Not Detected
1,1,2-Trichloroethane	1200	Not Detected
Tetrachloroethene	1200	340000
Ethylene Dibromide	1200	Not Detected
Chlorobenzene	1200	Not Detected
Ethyl Benzene	1200	Not Detected
m,p-Xylene	1200	Not Detected
o-Xylene	1200	Not Detected
Styrene	1200	Not Detected
1,1,2,2-Tetrachloroethane	1200	Not Detected
1,3,5-Trimethylbenzene	1200	Not Detected
1,2,4-Trimethylbenzene	1200	Not Detected
1,3-Dichlorobenzene	1200	Not Detected
1,4-Dichlorobenzene	1200	Not Detected
Chlorotoluene	1200	Not Detected
1,2-Dichlorobenzene	1200	Not Detected
1,2,4-Trichlorobenzene	1200	Not Detected
Hexachlorobutadiene	1200	Not Detected

Container Type: 1 Liter SUMMA Canister

AIR TOXICS LTD.

SAMPLE NAME: Lab Blank
ID#: 9408239-03A
EPA METHOD TO-14 GC/MS Full Scan

File Name:	1082816	**Date of Collection:**	NA
Dil. Factor:	1.0	**Date of Analysis:**	8/28/94

Compound	Det. Limit (ppbv)	Amount (ppbv)
Freon 12	0.50	Not Detected
Freon 114	0.50	Not Detected
Chloromethane	0.50	Not Detected
Vinyl Chloride	0.50	Not Detected
Bromomethane	0.50	Not Detected
Chloroethane	0.50	Not Detected
Freon 11	0.50	Not Detected
1,1-Dichloroethene	0.50	Not Detected
Freon 113	0.50	Not Detected
Methylene Chloride	0.50	Not Detected
1,1-Dichloroethane	0.50	Not Detected
cis-1,2-Dichloroethene	0.50	Not Detected
Chloroform	0.50	Not Detected
1,1,1-Trichloroethane	0.50	Not Detected
Carbon Tetrachloride	0.50	Not Detected
Benzene	0.50	Not Detected
1,2-Dichloroethane	0.50	Not Detected
Trichloroethene	0.50	Not Detected
1,2-Dichloropropane	0.50	Not Detected
cis-1,3-Dichloropropene	0.50	Not Detected
Toluene	0.50	Not Detected
trans-1,3-Dichloropropene	0.50	Not Detected
1,1,2-Trichloroethane	0.50	Not Detected
Tetrachloroethene	0.50	Not Detected
Ethylene Dibromide	0.50	Not Detected
Chlorobenzene	0.50	Not Detected
Ethyl Benzene	0.50	Not Detected
m,p-Xylene	0.50	Not Detected
o-Xylene	0.50	Not Detected
Styrene	0.50	Not Detected
1,1,2,2-Tetrachloroethane	0.50	Not Detected
1,3,5-Trimethylbenzene	0.50	Not Detected
1,2,4-Trimethylbenzene	0.50	Not Detected
1,3-Dichlorobenzene	0.50	Not Detected
1,4-Dichlorobenzene	0.50	Not Detected
Chlorotoluene	0.50	Not Detected
1,2-Dichlorobenzene	0.50	Not Detected
1,2,4-Trichlorobenzene	0.50	Not Detected
Hexachlorobutadiene	0.50	Not Detected

Container Type: NA

@ AIR TOXICS LTD.
AN ENVIRONMENTAL ANALYTICAL LABORATORY

180 BLUE RAVINE ROAD, SUITE B
FOLSOM, CA 95630-4719
(916) 985-1000 FAX: (916) 985-1020

No 001661

CHAIN-OF-CUSTODY RECORD

Contact Person JOHN HALL
Company Engineering - Science
Address 1700 Broadway #900 City Denver State CO Zip 80290
Phone _____ FAX _____

Project info:
P.O. # 722445.01000
Project # 722445.01000
Project Name PSNM - Person

Turn Around Time:
☒ Normal
☐ Rush 24 hr (Specify)

Lab I.D.	Field Sample I.D.	Date & Time	Analyses Requested	Canister Pressure / Vacuum Initial	Final	Receipt
01A	VW-3	8/25/94 09:20	TO-14 Canister No 9491 (RUSH)			4.5"Hg
02A	GAC-3	8/25/94 09:25	TO-14 " 9442 (RUSH)			5.0"Hg
	GAC-3A	8/25/94 09:30	TO-14 " 94106 (Normal)			

Collected By: Print GARY BAKER Signature Gary Baker

Relinquished By: (Signature) Date/Time Gary Baker 8/25/94 10:00AM
Received By: (Signature) Date/Time 8/25/94 10:00
Relinquished By: (Signature) Date/Time 8/25/94 12:00
Received By: (Signature) Date/Time 8/25/94 12:00
Fed Ex #1968 962166
Relinquished By: (Signature) Date/Time
Received By: (Signature) Date/Time 26 AUG 94 0931

Notes: Fax Results to Dave Meyers
(303) 831-8208
Hard Copy Results: JOHN HALL
635 Meadowood St
Grand Junction, CO 81504
(303) 244-8829
Billing - Denver

Lab Use Only	Shipper Name	Air Bill #	Opened By:	Date/Time	Temp. (°C)	Condition	Custody Seals Intact?	Work Order #
	FED-X	1968962166		26 AUG 94 0931	ROOM	GOOD	Yes No (None)	9408239

Form 1293 rev. 05

APPENDIX E

SOIL CORE ANALYTICAL RESULTS

Analytical Technologies, Inc.

2709-D Pan American Freeway, NE Albuquerque, NM 87107
Phone (505) 344-3777 FAX (505) 344-4413

ATI I.D. **407419**

August 15, 1994

Public Service Company of NM
Alvarado Square MS0408
Albuquerque, NM 87185

Project Name/Number: PERSON STATION (NONE)

Attention: Ron Johnson

On **07/28/94**, Analytical Technologies, Inc., (ADHS License No. AZ0015), received a request to analyze **non-aqueous** samples. The samples were analyzed with EPA methodology or equivalent methods. The results of these analyses and the quality control data, which follow each set of analyses, are enclosed.

If you have any questions or comments, please do not hesitate to contact us at (505) 344-3777.

Letitia Krakowski, Ph.D.
Project Manager

H. Mitchell Rubenstein, Ph.D.
Laboratory Manager

MR:jt

Enclosure

Analytical Technologies, Inc.

CLIENT : PUBLIC SERVICE COMPANY OF NM DATE RECEIVED : 07/28/94
PROJECT # : (NONE)
PROJECT NAME : PERSON STATION REPORT DATE : 08/15/94

ATI ID: 407419

ATI #	CLIENT DESCRIPTION	MATRIX	DATE COLLECTED
01	VEW-2	NON-AQ	07/28/94
02	VEW-4	NON-AQ	07/28/94
03	VEW-9	NON-AQ	07/28/94
04	VEW-14	NON-AQ	07/28/94
05	VEW-19	NON-AQ	07/28/94
06	VEW-24	NON-AQ	07/28/94
07	VEW-29	NON-AQ	07/28/94
08	VEW-34	NON-AQ	07/28/94
09	TRIP BLANK I	NON-AQ	07/27/94
10	VEW-39	NON-AQ	07/28/94
11	VEW-44A	NON-AQ	07/28/94
12	VEW-44B	NON-AQ	07/28/94
13	VEW-51	NON-AQ	07/28/94
14	VEW-54	NON-AQ	07/28/94
15	VEW-59	NON-AQ	07/28/94
16	VEW-64	NON-AQ	07/28/94
17	VEW-74	NON-AQ	07/28/94
18	VEW-79A	NON-AQ	07/28/94
19	VEW-79B	NON-AQ	07/28/94
20	VEW-84	NON-AQ	07/28/94
21	VEW-88	NON-AQ	07/28/94
22	VEW-94	NON-AQ	07/28/94
23	EQUP. BLANK	NON-AQ	07/28/94
24	VEW-100	NON-AQ	07/28/94
25	VEW-104	NON-AQ	07/28/94
26	VEW-109	NON-AQ	07/28/94
27	VEW-69	NON-AQ	07/28/94
28	VEW-35	NON-AQ	07/28/94
29	VEW-45	NON-AQ	07/28/94

---TOTALS---

MATRIX	#SAMPLES
NON-AQ	29

ATI STANDARD DISPOSAL PRACTICE

The samples from this project will be disposed of in thirty (30) days from the date of this report. If an extended storage period is required, please contact our sample control department before the scheduled disposal date.

Analytical Technologies, Inc.

GAS CHROMATOGRAPHY RESULTS

TEST : EPA 8015 MODIFIED
CLIENT : PUBLIC SERVICE COMPANY OF NM ATI I.D.: 407419
PROJECT # : (NONE)
PROJECT NAME : PERSON STATION

SAMPLE ID. #	CLIENT I.D.	MATRIX	DATE SAMPLED	DATE EXTRACTED	DATE ANALYZED	DIL. FACTOR
28	VEW-35	NON-AQ	07/28/94	07/29/94	08/01/94	10
29	VEW-45	NON-AQ	07/28/94	07/29/94	08/01/94	10

PARAMETER	UNITS	28	29
FUEL HYDROCARBONS	MG/KG	2200	3100
HYDROCARBON RANGE		C8-C32	C8-C32
HYDROCARBONS QUANTITATED USING		DIESEL	DIESEL
SURROGATE:			
O-TERPHENYL (%)		91	87

Note. 8015 method reports components in addition to chlorinated solvents (i.e., above ppm are in addition to ppm reported for PCE etc, PCE is not a part of the amount reported above)

Analytical Technologies, Inc.

GAS CHROMATOGRAPHY RESULTS

REAGENT BLANK

TEST	: EPA 8015 MODIFIED	ATI I.D.	: 407419
BLANK I.D.	: 072994B	MATRIX	: NON-AQ
CLIENT	: PUBLIC SERVICE COMPANY OF NM	DATE EXTRACTED	: 07/29/94
PROJECT #	: (NONE)	DATE ANALYZED	: 07/30/94
PROJECT NAME	: PERSON STATION	DILUTION FACTOR	: 1

PARAMETER	UNITS	
FUEL HYDROCARBONS	MG/KG	<5
HYDROCARBON RANGE		-
HYDROCARBONS QUANTITATED USING		-
SURROGATE:		
O-TERPHENYL (%)		107

Analytical Technologies, Inc.

GAS CHROMATOGRAPHY - QUALITY CONTROL

MSMSD

TEST	: EPA 8015 MODIFIED		
MSMSD #	: 40741607	ATI I.D.	: 407419
CLIENT	: PUBLIC SERVICE COMPANY OF NM	DATE EXTRACTED	: 07/29/94
PROJECT #	: (NONE)	DATE ANALYZED	: 07/31/94
PROJECT NAME	: PERSON STATION	SAMPLE MATRIX	: NON-AQ
REF. I.D.	: 40741607	UNITS	: MG/KG

PARAMETER	SAMPLE RESULT	CONC SPIKE	SPIKED SAMPLE	% REC	DUP SPIKE	DUP % REC	RPD
FUEL HYDROCARBONS	5.7	100	112	106	103	97	8

$$\% \text{ Recovery} = \frac{(\text{Spike Sample Result} - \text{Sample Result})}{\text{Spike Concentration}} \times 100$$

$$\text{RPD (Relative Percent Difference)} = \frac{(\text{Sample Result} - \text{Duplicate Result})}{\text{Average Result}} \times 100$$

Analytical Technologies, Inc.

GAS CHROMATOGRAPHY RESULTS

TEST : PURGEABLE HALOCARBONS/AROMATICS (EPA 8010/8020)
CLIENT : PUBLIC SERVICE COMPANY OF NM ATI I.D.: 407419
PROJECT # : (NONE)
PROJECT NAME : PERSON STATION

SAMPLE ID. #	CLIENT I.D.	MATRIX	DATE SAMPLED	DATE EXTRACTED	DATE ANALYZED	DIL. FACTOR
01	VEW-2	NON-AQ	07/28/94	07/28/94	08/10/94	50
02	VEW-4	NON-AQ	07/28/94	07/28/94	08/08/94	1
03	VEW-9	NON-AQ	07/28/94	07/28/94	08/08/94	1

PARAMETER	UNITS	01	02	03
BENZENE	MG/KG	<1.3	<0.025	<0.025
BROMODICHLOROMETHANE	MG/KG	<0.5	<0.010	<0.010
BROMOFORM	MG/KG	<0.5	<0.010	<0.010
BROMOMETHANE	MG/KG	<1.5	<0.030	<0.030
CARBON TETRACHLORIDE	MG/KG	<0.5	<0.010	<0.010
CHLOROBENZENE	MG/KG	<1.3	<0.025	<0.025
CHLOROETHANE	MG/KG	<1.3	<0.025	<0.025
CHLOROFORM	MG/KG	<3.0	<0.060	<0.060
CHLOROMETHANE	MG/KG	<1.3	<0.025	<0.025
DIBROMOCHLOROMETHANE	MG/KG	<0.5	<0.010	<0.010
1,2-DIBROMOETHANE (EDB)	MG/KG	<0.5	<0.010	<0.010
1,2-DICHLOROBENZENE	MG/KG	<1.3	<0.025	<0.025
1,3-DICHLOROBENZENE	MG/KG	<1.3	<0.025	<0.025
1,4-DICHLOROBENZENE	MG/KG	<1.3	<0.025	<0.025
1,1-DICHLOROETHANE	MG/KG	<0.5	<0.010	<0.010
1,2-DICHLOROETHANE (EDC)	MG/KG	<0.5	<0.010	<0.010
1,1-DICHLOROETHENE	MG/KG	<0.5	<0.010	<0.010
CIS-1,2-DICHLOROETHENE	MG/KG	<0.5	<0.010	<0.010
TRANS-1,2-DICHLOROETHENE	MG/KG	<0.5	<0.010	<0.010
1,2-DICHLOROPROPANE	MG/KG	<0.5	<0.010	<0.010
CIS-1,3-DICHLOROPROPENE	MG/KG	<0.5	<0.010	<0.010
TRANS-1,3-DICHLOROPROPENE	MG/KG	<0.5	<0.010	<0.010
ETHYLBENZENE	MG/KG	<1.3	<0.025	<0.025
METHYLENE CHLORIDE	MG/KG	<25	<0.50	<0.50
1,1,2,2-TETRACHLOROETHANE	MG/KG	<0.5	<0.010	<0.010
TETRACHLOROETHENE	MG/KG	32	0.59	0.75
TOLUENE	MG/KG	<1.3	<0.025	<0.025
1,1,1-TRICHLOROETHANE	MG/KG	<2.5	<0.050	<0.050
1,1,2-TRICHLOROETHANE	MG/KG	<0.5	<0.010	<0.010
TRICHLOROETHENE	MG/KG	<0.5	<0.010	<0.010
TRICHLOROFLUOROMETHANE	MG/KG	<0.5	<0.010	<0.010
VINYL CHLORIDE	MG/KG	<1.3	<0.025	<0.025
TOTAL XYLENES	MG/KG	<1.3	<0.025	<0.025
SURROGATES:				
BROMOCHLOROMETHANE (%)		98	85	77
TRIFLUOROTOLUENE (%)		100	95	102

Analytical Technologies, Inc.

GAS CHROMATOGRAPHY RESULTS

TEST : PURGEABLE HALOCARBONS/AROMATICS (EPA 8010/8020)
CLIENT : PUBLIC SERVICE COMPANY OF NM ATI I.D.: 407419
PROJECT # : (NONE)
PROJECT NAME : PERSON STATION

SAMPLE ID. #	CLIENT I.D.	MATRIX	DATE SAMPLED	DATE EXTRACTED	DATE ANALYZED	DIL. FACTOR
04	VEW-14	NON-AQ	07/28/94	07/28/94	08/09/94	50
05	VEW-19	NON-AQ	07/28/94	07/28/94	08/09/94	50
06	VEW-24	NON-AQ	07/28/94	07/28/94	08/09/94	50

PARAMETER	UNITS	04	05	06
BENZENE	MG/KG	<1.3	<1.3	<1.3
BROMODICHLOROMETHANE	MG/KG	<0.50	<0.50	<0.50
BROMOFORM	MG/KG	<0.50	<0.50	<0.50
BROMOMETHANE	MG/KG	<1.5	<1.5	<1.5
CARBON TETRACHLORIDE	MG/KG	<0.50	<0.50	<0.50
CHLOROBENZENE	MG/KG	<1.3	<1.3	<1.3
CHLOROETHANE	MG/KG	<1.3	<1.3	<1.3
CHLOROFORM	MG/KG	<3.0	<3.0	<3.0
CHLOROMETHANE	MG/KG	<1.3	<1.3	<1.3
DIBROMOCHLOROMETHANE	MG/KG	<0.50	<0.50	<0.50
1,2-DIBROMOETHANE (EDB)	MG/KG	<0.50	<0.50	<0.50
1,2-DICHLOROBENZENE	MG/KG	<1.3	<1.3	<1.3
1,3-DICHLOROBENZENE	MG/KG	<1.3	<1.3	<1.3
1,4-DICHLOROBENZENE	MG/KG	<1.3	<1.3	<1.3
1,1-DICHLOROETHANE	MG/KG	<0.50	<0.50	<0.50
1,2-DICHLOROETHANE (EDC)	MG/KG	<0.50	<0.50	<0.50
1,1-DICHLOROETHENE	MG/KG	<0.50	<0.50	<0.50
CIS-1,2-DICHLOROETHENE	MG/KG	<0.50	<0.50	<0.50
TRANS-1,2-DICHLOROETHENE	MG/KG	<0.50	<0.50	<0.50
1,2-DICHLOROPROPANE	MG/KG	<0.50	<0.50	<0.50
CIS-1,3-DICHLOROPROPENE	MG/KG	<0.50	<0.50	<0.50
TRANS-1,3-DICHLOROPROPENE	MG/KG	<0.50	<0.50	<0.50
ETHYLBENZENE	MG/KG	<1.3	<1.3	<1.3
METHYLENE CHLORIDE	MG/KG	<25	<25	<25
1,1,2,2-TETRACHLOROETHANE	MG/KG	<0.50	<0.50	<0.50
TETRACHLOROETHENE	MG/KG	47 D(100)	63 D(100)*	152 D(200)
TOLUENE	MG/KG	<1.3	<1.3	<1.3
1,1,1-TRICHLOROETHANE	MG/KG	<2.5	<2.5	<2.5
1,1,2-TRICHLOROETHANE	MG/KG	<0.50	<0.50	<0.50
TRICHLOROETHENE	MG/KG	<0.50	<0.50	<0.50
TRICHLOROFLUOROMETHANE	MG/KG	<0.50	<0.50	<0.50
VINYL CHLORIDE	MG/KG	<1.3	<1.3	<1.3
TOTAL XYLENES	MG/KG	<1.3	<1.3	<1.3
SURROGATES:				
BROMOCHLOROMETHANE (%)		107	98	98
TRIFLUOROTOLUENE (%)		94	108	108

D(100)=DILUTED 100X, ANALYZED 08/10/94
D(100)*=DILUTED 100X, ANALYZED 08/09/94
D(200)=DILUTED 200X, ANALYZED 08/10/94

Analytical Technologies, Inc.

GAS CHROMATOGRAPHY RESULTS

TEST : PURGEABLE HALOCARBONS/AROMATICS (EPA 8010/8020)
CLIENT : PUBLIC SERVICE COMPANY OF NM ATI I.D.: 407419
PROJECT # : (NONE)
PROJECT NAME : PERSON STATION

SAMPLE ID. #	CLIENT I.D.	MATRIX	DATE SAMPLED	DATE EXTRACTED	DATE ANALYZED	DIL. FACTOR
07	VEW-29	NON-AQ	07/28/94	07/28/94	08/09/94	50
08	VEW-34	NON-AQ	07/28/94	07/28/94	08/03/94	1
09	TRIP BLANK I	NON-AQ	07/27/94	07/27/94	08/10/94	1

PARAMETER	UNITS	07	08	09
BENZENE	MG/KG	<1.3	<0.025	<0.025
BROMODICHLOROMETHANE	MG/KG	<0.50	<0.010	<0.010
BROMOFORM	MG/KG	<0.50	<0.010	<0.010
BROMOMETHANE	MG/KG	<1.5	<0.030	<0.030
CARBON TETRACHLORIDE	MG/KG	<0.50	<0.010	<0.010
CHLOROBENZENE	MG/KG	<1.3	<0.025	<0.025
CHLOROETHANE	MG/KG	<1.3	<0.025	<0.025
CHLOROFORM	MG/KG	<3.0	<0.060	<0.060
CHLOROMETHANE	MG/KG	<1.3	<0.025	<0.025
DIBROMOCHLOROMETHANE	MG/KG	<0.50	<0.010	<0.010
1,2-DIBROMOETHANE (EDB)	MG/KG	<0.50	<0.010	<0.010
1,2-DICHLOROBENZENE	MG/KG	<1.3	<0.025	<0.025
1,3-DICHLOROBENZENE	MG/KG	<1.3	<0.025	<0.025
1,4-DICHLOROBENZENE	MG/KG	<1.3	<0.025	<0.025
1,1-DICHLOROETHANE	MG/KG	<0.50	<0.010	<0.010
1,2-DICHLOROETHANE (EDC)	MG/KG	<0.50	<0.010	<0.010
1,1-DICHLOROETHENE	MG/KG	<0.50	<0.010	<0.010
CIS-1,2-DICHLOROETHENE	MG/KG	<0.50	<0.010	<0.010
TRANS-1,2-DICHLOROETHENE	MG/KG	<0.50	<0.010	<0.010
1,2-DICHLOROPROPANE	MG/KG	<0.50	<0.010	<0.010
CIS-1,3-DICHLOROPROPENE	MG/KG	<0.50	<0.010	<0.010
TRANS-1,3-DICHLOROPROPENE	MG/KG	<0.50	<0.010	<0.010
ETHYLBENZENE	MG/KG	<1.3	<0.025	<0.025
METHYLENE CHLORIDE	MG/KG	<25	<0.50	<0.50
1,1,2,2-TETRACHLOROETHANE	MG/KG	<0.50	<0.010	<0.010
TETRACHLOROETHENE	MG/KG	860 D(1000)	320 D(1000)	<0.025
TOLUENE	MG/KG	<1.3	<0.025	<0.025
1,1,1-TRICHLOROETHANE	MG/KG	<2.5	2.1 D(50)	<0.050
1,1,2-TRICHLOROETHANE	MG/KG	<0.50	<0.010	<0.010
TRICHLOROETHENE	MG/KG	<0.50	0.04	<0.010
TRICHLOROFLUOROMETHANE	MG/KG	<0.50	<0.010	<0.010
VINYL CHLORIDE	MG/KG	<1.3	<0.025	<0.025
TOTAL XYLENES	MG/KG	2.9	<0.025	<0.025
SURROGATES:				
BROMOCHLOROMETHANE (%)		96	86	78
TRIFLUOROTOLUENE (%)		97	110	102

D(50)=DILUTED 50X, ANALYZED 08/09/94
D(1000)=DILUTED 1000X, ANALYZED 08/10/94

Analytical Technologies, Inc.

GAS CHROMATOGRAPHY RESULTS

TEST : PURGEABLE HALOCARBONS/AROMATICS (EPA 8010/8020)
CLIENT : PUBLIC SERVICE COMPANY OF NM ATI I.D.: 407419
PROJECT # : (NONE)
PROJECT NAME : PERSON STATION

SAMPLE ID. #	CLIENT I.D.	MATRIX	DATE SAMPLED	DATE EXTRACTED	DATE ANALYZED	DIL. FACTOR
10	VEW-39	NON-AQ	07/28/94	07/28/94	08/03/94	1
11	VEW-44A	NON-AQ	07/28/94	07/28/94	08/03/94	1
12	VEW-44B	NON-AQ	07/28/94	07/28/94	08/03/94	1

PARAMETER	UNITS	10	11	12
BENZENE	MG/KG	<1.3 D(50)	<1.3 D(50)	<1.3 D(50)
BROMODICHLOROMETHANE	MG/KG	<0.010	<0.010	<0.010
BROMOFORM	MG/KG	<0.010	<0.010	<0.010
BROMOMETHANE	MG/KG	<0.030	<0.030	<0.030
CARBON TETRACHLORIDE	MG/KG	<0.010	<0.010	<0.010
CHLOROBENZENE	MG/KG	<0.025	<0.025	<0.025
CHLOROETHANE	MG/KG	<0.025	<0.025	<0.025
CHLOROFORM	MG/KG	<0.060	<0.060	<0.060
CHLOROMETHANE	MG/KG	<0.025	<0.025	<0.025
DIBROMOCHLOROMETHANE	MG/KG	<0.010	<0.010	<0.010
1,2-DIBROMOETHANE (EDB)	MG/KG	<0.010	<0.010	<0.010
1,2-DICHLOROBENZENE	MG/KG	<0.025	<0.025	<0.025
1,3-DICHLOROBENZENE	MG/KG	<0.025	<0.025	<0.025
1,4-DICHLOROBENZENE	MG/KG	<0.025	<0.025	<0.025
1,1-DICHLOROETHANE	MG/KG	<0.010	<0.010	<0.010
1,2-DICHLOROETHANE (EDC)	MG/KG	<0.010	<0.010	<0.010
1,1-DICHLOROETHENE	MG/KG	<0.010	0.015	<0.010
CIS-1,2-DICHLOROETHENE	MG/KG	<0.010	<0.010	<0.010
TRANS-1,2-DICHLOROETHENE	MG/KG	<0.010	<0.010	<0.010
1,2-DICHLOROPROPANE	MG/KG	<0.010	<0.010	<0.010
CIS-1,3-DICHLOROPROPENE	MG/KG	<0.010	<0.010	<0.010
TRANS-1,3-DICHLOROPROPENE	MG/KG	<0.010	<0.010	<0.010
ETHYLBENZENE	MG/KG	<1.3 D(50)	<1.3 D(50)	<1.3 D(50)
METHYLENE CHLORIDE	MG/KG	<0.50	<0.50	<0.50
1,1,2,2-TETRACHLOROETHANE	MG/KG	<0.010	<0.010	<0.010
TETRACHLOROETHENE	MG/KG	880 D(2500)	430 (1000)	260 D(1000)
TOLUENE	MG/KG	<1.3 D(50)	<1.3 D(50)	<1.3 D(50)
1,1,1-TRICHLOROETHANE	MG/KG	5.1 D(50)	1.6 D(50)	0.99 D(50)
1,1,2-TRICHLOROETHANE	MG/KG	<0.010	<0.010	<0.010
TRICHLOROETHENE	MG/KG	0.058	0.041	0.018
TRICHLOROFLUOROMETHANE	MG/KG	<0.010	<0.010	<0.010
VINYL CHLORIDE	MG/KG	<0.025	<0.025	<0.025
TOTAL XYLENES	MG/KG	5.1 D(50)	1.4 D(50)	<1.3 D(50)
SURROGATES:				
BROMOCHLOROMETHANE (%)		81	81	83
TRIFLUOROTOLUENE (%)		87 D(50)	98 D(50)	101 D(50)

D(50)=DILUTED 50X, ANALYZED 08/09/94
D(2500)=DILUTED 2500X, ANALYZED 08/09/94
D(1000)=DILUTED 1000X, ANALYZED 08/10/94

Analytical Technologies, Inc.

GAS CHROMATOGRAPHY RESULTS

TEST : PURGEABLE HALOCARBONS/AROMATICS (EPA 8010/8020)
CLIENT : PUBLIC SERVICE COMPANY OF NM ATI I.D.: 407419
PROJECT # : (NONE)
PROJECT NAME: PERSON STATION

SAMPLE ID. #	CLIENT I.D.	MATRIX	DATE SAMPLED	DATE EXTRACTED	DATE ANALYZED	DIL. FACTOR
13	VEW-51	NON-AQ	07/28/94	07/28/94	08/03/94	1
14	VEW-54	NON-AQ	07/28/94	07/28/94	08/04/94	1
15	VEW-59	NON-AQ	07/28/94	07/28/94	08/04/94	1

PARAMETER	UNITS	13	14	15
BENZENE	MG/KG	<1.3 D(50)	<63 D(2500)	<0.025
BROMODICHLOROMETHANE	MG/KG	0.056	<0.010	<0.010
BROMOFORM	MG/KG	<0.010	<0.010	<0.010
BROMOMETHANE	MG/KG	<0.030	<0.030	<0.030
CARBON TETRACHLORIDE	MG/KG	<0.010	<0.010	<0.010
CHLOROBENZENE	MG/KG	<0.025	<0.025	<0.025
CHLOROETHANE	MG/KG	<0.025	<0.025	<0.025
CHLOROFORM	MG/KG	<0.060	<0.060	<0.060
CHLOROMETHANE	MG/KG	<0.025	<0.025	<0.025
DIBROMOCHLOROMETHANE	MG/KG	<0.010	<0.010	<0.010
1,2-DIBROMOETHANE (EDB)	MG/KG	<0.010	<0.010	<0.010
1,2-DICHLOROBENZENE	MG/KG	<0.025	<0.025	<0.025
1,3-DICHLOROBENZENE	MG/KG	<0.025	<0.025	<0.025
1,4-DICHLOROBENZENE	MG/KG	<0.025	<0.025	<0.025
1,1-DICHLOROETHANE	MG/KG	<0.010	<0.010	<0.010
1,2-DICHLOROETHANE (EDC)	MG/KG	<0.010	<0.010	<0.010
1,1-DICHLOROETHENE	MG/KG	0.014	<0.010	<0.010
CIS-1,2-DICHLOROETHENE	MG/KG	<0.010	<0.010	<0.010
TRANS-1,2-DICHLOROETHENE	MG/KG	<0.010	<0.010	<0.010
1,2-DICHLOROPROPANE	MG/KG	<0.010	<0.010	<0.010
CIS-1,3-DICHLOROPROPENE	MG/KG	<0.010	<0.010	<0.010
TRANS-1,3-DICHLOROPROPENE	MG/KG	<0.010	<0.010	<0.010
ETHYLBENZENE	MG/KG	<1.3 D(50)	<63 D(2500)	<0.025
METHYLENE CHLORIDE	MG/KG	<0.50	<0.50	<0.50
1,1,2,2-TETRACHLOROETHANE	MG/KG	<0.010	<0.010	<0.010
TETRACHLOROETHENE	MG/KG	660 D(2500)	210 D(2500)	340 D(2500)
TOLUENE	MG/KG	<1.3 D(50)	<63 D(2500)	<0.025
1,1,1-TRICHLOROETHANE	MG/KG	2.2 D(50)	0.45	<125 D(2500)
1,1,2-TRICHLOROETHANE	MG/KG	<0.010	<0.010	<0.010
TRICHLOROETHENE	MG/KG	0.013	<0.010	0.033
TRICHLOROFLUOROMETHANE	MG/KG	<0.010	<0.010	<0.010
VINYL CHLORIDE	MG/KG	<0.025	<0.025	<0.025
TOTAL XYLENES	MG/KG	1.3 D(50)	<63 D(2500)	<0.025
SURROGATES:				
BROMOCHLOROMETHANE (%)		86	85	100
TRIFLUOROTOLUENE (%)		101 D(50)	100 D(2500)	100

D(2500)=DILUTED 2500X, ANALYZED 08/10/94
D(50)=DILUTED 50X, ANALYZED 08/09/94

Analytical Technologies, Inc.

GAS CHROMATOGRAPHY RESULTS

TEST : PURGEABLE HALOCARBONS/AROMATICS (EPA 8010/8020)
CLIENT : PUBLIC SERVICE COMPANY OF NM ATI I.D.: 407419
PROJECT # : (NONE)
PROJECT NAME : PERSON STATION

SAMPLE ID. #	CLIENT I.D.	MATRIX	DATE SAMPLED	DATE EXTRACTED	DATE ANALYZED	DIL. FACTOR
16	VEW-64	NON-AQ	07/28/94	07/28/94	08/11/94	1
17	VEW-74	NON-AQ	07/28/94	07/28/94	08/10/94	1
18	VEW-79A	NON-AQ	07/28/94	07/28/94	08/08/94	1

PARAMETER	UNITS	16	17	18
BENZENE	MG/KG	<0.025	<0.025	<0.025
BROMODICHLOROMETHANE	MG/KG	<0.010	<0.010	<0.010
BROMOFORM	MG/KG	<0.010	<0.010	<0.010
BROMOMETHANE	MG/KG	<0.030	<0.030	<0.030
CARBON TETRACHLORIDE	MG/KG	<0.010	<0.010	<0.010
CHLOROBENZENE	MG/KG	<0.025	<0.025	<0.025
CHLOROETHANE	MG/KG	<0.025	<0.025	<0.025
CHLOROFORM	MG/KG	<0.060	<0.060	<0.060
CHLOROMETHANE	MG/KG	<0.025	<0.025	<0.025
DIBROMOCHLOROMETHANE	MG/KG	<0.010	<0.010	<0.010
1,2-DIBROMOETHANE (EDB)	MG/KG	<0.010	<0.010	<0.010
1,2-DICHLOROBENZENE	MG/KG	<0.025	<0.025	<0.025
1,3-DICHLOROBENZENE	MG/KG	<0.025	<0.025	<0.025
1,4-DICHLOROBENZENE	MG/KG	<0.025	<0.025	<0.025
1,1-DICHLOROETHANE	MG/KG	<0.010	<0.010	<0.010
1,2-DICHLOROETHANE (EDC)	MG/KG	<0.010	<0.010	<0.010
1,1-DICHLOROETHENE	MG/KG	<0.010	<0.010	<0.010
CIS-1,2-DICHLOROETHENE	MG/KG	<0.010	<0.010	<0.010
TRANS-1,2-DICHLOROETHENE	MG/KG	<0.010	<0.010	<0.010
1,2-DICHLOROPROPANE	MG/KG	<0.010	<0.010	<0.010
CIS-1,3-DICHLOROPROPENE	MG/KG	<0.010	<0.010	<0.010
TRANS-1,3-DICHLOROPROPENE	MG/KG	<0.010	<0.010	<0.010
ETHYLBENZENE	MG/KG	<0.025	<0.025	<0.025
METHYLENE CHLORIDE	MG/KG	<0.50	<0.50	<0.50
1,1,2,2-TETRACHLOROETHANE	MG/KG	<0.010	<0.010	<0.010
TETRACHLOROETHENE	MG/KG	1.1 D(5)	1.7 D(5)	0.081
TOLUENE	MG/KG	<0.025	0.026	<0.025
1,1,1-TRICHLOROETHANE	MG/KG	<0.050	<0.050	<0.050
1,1,2-TRICHLOROETHANE	MG/KG	<0.010	<0.010	<0.010
TRICHLOROETHENE	MG/KG	<0.010	<0.010	<0.010
TRICHLOROFLUOROMETHANE	MG/KG	<0.010	<0.010	<0.010
VINYL CHLORIDE	MG/KG	<0.025	<0.025	<0.025
TOTAL XYLENES	MG/KG	<0.025	<0.025	<0.025
SURROGATES:				
BROMOCHLOROMETHANE (%)		77	91	72
TRIFLUOROTOLUENE (%)		103	101	103

D(5)=DILUTED 5X, ANALYZED 08/11/94

Analytical Technologies, Inc.

GAS CHROMATOGRAPHY RESULTS

TEST : PURGEABLE HALOCARBONS/AROMATICS (EPA 8010/8020)
CLIENT : PUBLIC SERVICE COMPANY OF NM ATI I.D.: 407419
PROJECT # : (NONE)
PROJECT NAME : PERSON STATION

SAMPLE ID. #	CLIENT I.D.	MATRIX	DATE SAMPLED	DATE EXTRACTED	DATE ANALYZED	DIL. FACTOR
19	VEW-79B	NON-AQ	07/28/94	07/28/94	08/08/94	1
20	VEW-84	NON-AQ	07/28/94	07/28/94	08/08/94	1
21	VEW-88	NON-AQ	07/28/94	07/28/94	08/08/94	1

PARAMETER	UNITS	19	20	21
BENZENE	MG/KG	<0.025	<0.025	<0.025
BROMODICHLOROMETHANE	MG/KG	<0.010	<0.010	<0.010
BROMOFORM	MG/KG	<0.010	<0.010	<0.010
BROMOMETHANE	MG/KG	<0.030	<0.030	<0.030
CARBON TETRACHLORIDE	MG/KG	<0.010	<0.010	<0.010
CHLOROBENZENE	MG/KG	<0.025	<0.025	<0.025
CHLOROETHANE	MG/KG	<0.025	<0.025	<0.025
CHLOROFORM	MG/KG	<0.060	<0.060	<0.060
CHLOROMETHANE	MG/KG	<0.025	<0.025	<0.025
DIBROMOCHLOROMETHANE	MG/KG	<0.010	<0.010	<0.010
1,2-DIBROMOETHANE (EDB)	MG/KG	<0.010	<0.010	<0.010
1,2-DICHLOROBENZENE	MG/KG	<0.025	<0.025	<0.025
1,3-DICHLOROBENZENE	MG/KG	<0.025	<0.025	<0.025
1,4-DICHLOROBENZENE	MG/KG	<0.025	<0.025	<0.025
1,1-DICHLOROETHANE	MG/KG	<0.010	<0.010	<0.010
1,2-DICHLOROETHANE (EDC)	MG/KG	<0.010	<0.010	<0.010
1,1-DICHLOROETHENE	MG/KG	<0.010	<0.010	<0.010
CIS-1,2-DICHLOROETHENE	MG/KG	<0.010	<0.010	<0.010
TRANS-1,2-DICHLOROETHENE	MG/KG	<0.010	<0.010	<0.010
1,2-DICHLOROPROPANE	MG/KG	<0.010	<0.010	<0.010
CIS-1,3-DICHLOROPROPENE	MG/KG	<0.010	<0.010	<0.010
TRANS-1,3-DICHLOROPROPENE	MG/KG	<0.010	<0.010	<0.010
ETHYLBENZENE	MG/KG	<0.025	<0.025	<0.025
METHYLENE CHLORIDE	MG/KG	<0.50	<0.50	<0.50
1,1,2,2-TETRACHLOROETHANE	MG/KG	<0.010	<0.010	<0.010
TETRACHLOROETHENE	MG/KG	0.26	1.1 D(2)	0.16
TOLUENE	MG/KG	<0.025	<0.025	<0.025
1,1,1-TRICHLOROETHANE	MG/KG	<0.050	0.067	<0.050
1,1,2-TRICHLOROETHANE	MG/KG	<0.010	<0.010	<0.010
TRICHLOROETHENE	MG/KG	<0.010	<0.010	<0.010
TRICHLOROFLUOROMETHANE	MG/KG	0.012	<0.010	<0.010
VINYL CHLORIDE	MG/KG	<0.025	<0.025	<0.025
TOTAL XYLENES	MG/KG	<0.025	<0.025	<0.025
SURROGATES:				
BROMOCHLOROMETHANE (%)		82	83	77
TRIFLUOROTOLUENE (%)		102	99	99

D(2)=DILUTED 2X, ANALYZED 08/10/94

Analytical Technologies, Inc.

GAS CHROMATOGRAPHY RESULTS

TEST : PURGEABLE HALOCARBONS/AROMATICS (EPA 8010/8020)
CLIENT : PUBLIC SERVICE COMPANY OF NM ATI I.D.: 407419
PROJECT # : (NONE)
PROJECT NAME : PERSON STATION

SAMPLE ID. #	CLIENT I.D.	MATRIX	DATE SAMPLED	DATE EXTRACTED	DATE ANALYZED	DIL. FACTOR
22	VEW-94	NON-AQ	07/28/94	07/28/94	08/08/94	1
23	EQUIP. BLANK	NON-AQ	07/28/94	07/28/94	08/10/94	1
24	VEW-100	NON-AQ	07/28/94	07/28/94	08/11/94	1

PARAMETER	UNITS	22	23	24
BENZENE	MG/KG	<0.025	<0.025	<0.025
BROMODICHLOROMETHANE	MG/KG	<0.010	<0.010	<0.010
BROMOFORM	MG/KG	<0.010	<0.010	<0.010
BROMOMETHANE	MG/KG	<0.030	<0.030	<0.030
CARBON TETRACHLORIDE	MG/KG	<0.010	<0.010	<0.010
CHLOROBENZENE	MG/KG	<0.025	<0.025	<0.025
CHLOROETHANE	MG/KG	<0.025	<0.025	<0.025
CHLOROFORM	MG/KG	<0.060	<0.060	<0.060
CHLOROMETHANE	MG/KG	<0.025	<0.025	<0.025
DIBROMOCHLOROMETHANE	MG/KG	<0.010	<0.010	<0.010
1,2-DIBROMOETHANE (EDB)	MG/KG	<0.010	<0.010	<0.010
1,2-DICHLOROBENZENE	MG/KG	<0.025	<0.025	<0.025
1,3-DICHLOROBENZENE	MG/KG	<0.025	<0.025	<0.025
1,4-DICHLOROBENZENE	MG/KG	<0.025	<0.025	<0.025
1,1-DICHLOROETHANE	MG/KG	<0.010	<0.010	<0.010
1,2-DICHLOROETHANE (EDC)	MG/KG	<0.010	<0.010	<0.010
1,1-DICHLOROETHENE	MG/KG	<0.010	<0.010	<0.010
CIS-1,2-DICHLOROETHENE	MG/KG	<0.010	<0.010	<0.010
TRANS-1,2-DICHLOROETHENE	MG/KG	<0.010	<0.010	<0.010
1,2-DICHLOROPROPANE	MG/KG	<0.010	<0.010	<0.010
CIS-1,3-DICHLOROPROPENE	MG/KG	<0.010	<0.010	<0.010
TRANS-1,3-DICHLOROPROPENE	MG/KG	<0.010	<0.010	<0.010
ETHYLBENZENE	MG/KG	<0.025	<0.025	<0.025
METHYLENE CHLORIDE	MG/KG	<0.50	<0.50	<0.50
1,1,2,2-TETRACHLOROETHANE	MG/KG	<0.010	<0.010	<0.010
TETRACHLOROETHENE	MG/KG	<0.025	<0.025	0.12
TOLUENE	MG/KG	<0.025	<0.025	<0.025
1,1,1-TRICHLOROETHANE	MG/KG	<0.050	<0.050	<0.050
1,1,2-TRICHLOROETHANE	MG/KG	<0.010	<0.010	<0.010
TRICHLOROETHENE	MG/KG	<0.010	<0.010	<0.010
TRICHLOROFLUOROMETHANE	MG/KG	<0.010	<0.010	<0.010
VINYL CHLORIDE	MG/KG	<0.025	<0.025	<0.025
TOTAL XYLENES	MG/KG	<0.025	<0.025	<0.025
SURROGATES:				
BROMOCHLOROMETHANE (%)		97	83	95
TRIFLUOROTOLUENE (%)		105	100	115

Analytical Technologies, Inc.

GAS CHROMATOGRAPHY RESULTS

TEST : PURGEABLE HALOCARBONS/AROMATICS (EPA 8010/8020)
CLIENT : PUBLIC SERVICE COMPANY OF NM ATI I.D.: 407419
PROJECT # : (NONE)
PROJECT NAME : PERSON STATION

SAMPLE ID. #	CLIENT I.D.	MATRIX	DATE SAMPLED	DATE EXTRACTED	DATE ANALYZED	DIL. FACTOR
25	VEW-104	NON-AQ	07/28/94	07/28/94	08/11/94	1
26	VEW-109	NON-AQ	07/28/94	07/28/94	08/11/94	1
27	VEW-69	NON-AQ	07/28/94	07/28/94	08/11/94	1

PARAMETER	UNITS	25	26	27
BENZENE	MG/KG	<0.025	<0.025	<0.025
BROMODICHLOROMETHANE	MG/KG	<0.010	<0.010	<0.010
BROMOFORM	MG/KG	<0.010	<0.010	<0.010
BROMOMETHANE	MG/KG	<0.030	<0.030	<0.030
CARBON TETRACHLORIDE	MG/KG	<0.010	<0.010	<0.010
CHLOROBENZENE	MG/KG	<0.025	<0.025	<0.025
CHLOROETHANE	MG/KG	<0.025	<0.025	<0.025
CHLOROFORM	MG/KG	<0.060	<0.060	<0.060
CHLOROMETHANE	MG/KG	<0.025	<0.025	<0.025
DIBROMOCHLOROMETHANE	MG/KG	<0.010	<0.010	<0.010
1,2-DIBROMOETHANE (EDB)	MG/KG	<0.010	<0.010	<0.010
1,2-DICHLOROBENZENE	MG/KG	<0.025	<0.025	<0.025
1,3-DICHLOROBENZENE	MG/KG	<0.025	<0.025	<0.025
1,4-DICHLOROBENZENE	MG/KG	<0.025	<0.025	<0.025
1,1-DICHLOROETHANE	MG/KG	<0.010	<0.010	<0.010
1,2-DICHLOROETHANE (EDC)	MG/KG	<0.010	<0.010	<0.010
1,1-DICHLOROETHENE	MG/KG	0.011	<0.010	<0.010
CIS-1,2-DICHLOROETHENE	MG/KG	<0.010	<0.010	<0.010
TRANS-1,2-DICHLOROETHENE	MG/KG	<0.010	<0.010	<0.010
1,2-DICHLOROPROPANE	MG/KG	<0.010	<0.010	<0.010
CIS-1,3-DICHLOROPROPENE	MG/KG	<0.010	<0.010	<0.010
TRANS-1,3-DICHLOROPROPENE	MG/KG	<0.010	<0.010	<0.010
ETHYLBENZENE	MG/KG	<0.025	<0.025	<0.025
METHYLENE CHLORIDE	MG/KG	<0.50	<0.50	<0.50
1,1,2,2-TETRACHLOROETHANE	MG/KG	<0.010	<0.010	<0.010
TETRACHLOROETHENE	MG/KG	0.75	0.52	0.89
TOLUENE	MG/KG	<0.025	<0.025	<0.025
1,1,1-TRICHLOROETHANE	MG/KG	<0.050	<0.050	<0.050
1,1,2-TRICHLOROETHANE	MG/KG	<0.010	<0.010	<0.010
TRICHLOROETHENE	MG/KG	<0.010	<0.010	<0.010
TRICHLOROFLUOROMETHANE	MG/KG	<0.010	<0.010	<0.010
VINYL CHLORIDE	MG/KG	<0.025	<0.025	<0.025
TOTAL XYLENES	MG/KG	<0.025	<0.025	<0.025
SURROGATES:				
BROMOCHLOROMETHANE (%)		96	85	67
TRIFLUOROTOLUENE (%)		113	99	99

Analytical Technologies, Inc.

GAS CHROMATOGRAPHY RESULTS - QUALITY CONTROL

REAGENT BLANK

TEST	: EPA 8010/8020	ATI I.D.	: 407419
BLANK I.D.	: 080394	MATRIX	: NON-AQ
CLIENT	: PUBLIC SERVICE COMPANY OF NM	DATE EXTRACTED	: NA
PROJECT #	: (NONE)	DATE ANALYZED	: 08/03/94
PROJECT NAME	: PERSON STATION	DIL. FACTOR	: 1

PARAMETER	UNITS	
BENZENE	MG/KG	<0.025
BROMODICHLOROMETHANE	MG/KG	<0.010
BROMOFORM	MG/KG	<0.010
BROMOMETHANE	MG/KG	<0.030
CARBON TETRACHLORIDE	MG/KG	<0.010
CHLOROBENZENE	MG/KG	<0.025
CHLOROETHANE	MG/KG	<0.025
CHLOROFORM	MG/KG	<0.060
CHLOROMETHANE	MG/KG	<0.025
DIBROMOCHLOROMETHANE	MG/KG	<0.010
1,2-DIBROMOETHANE (EDB)	MG/KG	<0.010
1,2-DICHLOROBENZENE	MG/KG	<0.025
1,3-DICHLOROBENZENE	MG/KG	<0.025
1,4-DICHLOROBENZENE	MG/KG	<0.025
1,1-DICHLOROETHANE	MG/KG	<0.010
1,2-DICHLOROETHANE (EDC)	MG/KG	<0.010
1,1-DICHLOROETHENE	MG/KG	<0.010
CIS-1,2-DICHLOROETHENE	MG/KG	<0.010
TRANS-1,2-DICHLOROETHENE	MG/KG	<0.010
1,2-DICHLOROPROPANE	MG/KG	<0.010
CIS-1,3-DICHLOROPROPENE	MG/KG	<0.010
TRANS-1,3-DICHLOROPROPENE	MG/KG	<0.010
ETHYLBENZENE	MG/KG	<0.025
METHYLENE CHLORIDE	MG/KG	<0.50
1,1,2,2-TETRACHLOROETHANE	MG/KG	<0.010
TETRACHLOROETHENE	MG/KG	<0.025
TOLUENE	MG/KG	<0.025
1,1,1-TRICHLOROETHANE	MG/KG	<0.050
1,1,2-TRICHLOROETHANE	MG/KG	<0.010
TRICHLOROETHENE	MG/KG	<0.010
TRICHLOROFLUOROMETHANE	MG/KG	<0.010
VINYL CHLORIDE	MG/KG	<0.025
TOTAL XYLENES	MG/KG	<0.025
SURROGATES:		
BROMOCHLOROMETHANE (%)		100
TRIFLUOROTOLUENE (%)		100

Analytical Technologies, Inc.

GAS CHROMATOGRAPHY RESULTS - QUALITY CONTROL

REAGENT BLANK

TEST	: EPA 8010/8020	ATI I.D.	: 407419
BLANK I.D.	: 080494	MATRIX	: NON-AQ
CLIENT	: PUBLIC SERVICE COMPANY OF NM	DATE EXTRACTED	: NA
PROJECT #	: (NONE)	DATE ANALYZED	: 08/04/94
PROJECT NAME	: PERSON STATION	DIL. FACTOR	: 1

PARAMETER	UNITS	
BENZENE	MG/KG	<0.025
BROMODICHLOROMETHANE	MG/KG	<0.010
BROMOFORM	MG/KG	<0.010
BROMOMETHANE	MG/KG	<0.030
CARBON TETRACHLORIDE	MG/KG	<0.010
CHLOROBENZENE	MG/KG	<0.025
CHLOROETHANE	MG/KG	<0.025
CHLOROFORM	MG/KG	<0.060
CHLOROMETHANE	MG/KG	<0.025
DIBROMOCHLOROMETHANE	MG/KG	<0.010
1,2-DIBROMOETHANE (EDB)	MG/KG	<0.010
1,2-DICHLOROBENZENE	MG/KG	<0.025
1,3-DICHLOROBENZENE	MG/KG	<0.025
1,4-DICHLOROBENZENE	MG/KG	<0.025
1,1-DICHLOROETHANE	MG/KG	<0.010
1,2-DICHLOROETHANE (EDC)	MG/KG	<0.010
1,1-DICHLOROETHENE	MG/KG	<0.010
CIS-1,2-DICHLOROETHENE	MG/KG	<0.010
TRANS-1,2-DICHLOROETHENE	MG/KG	<0.010
1,2-DICHLOROPROPANE	MG/KG	<0.010
CIS-1,3-DICHLOROPROPENE	MG/KG	<0.010
TRANS-1,3-DICHLOROPROPENE	MG/KG	<0.010
ETHYLBENZENE	MG/KG	<0.025
METHYLENE CHLORIDE	MG/KG	<0.50
1,1,2,2-TETRACHLOROETHANE	MG/KG	<0.010
TETRACHLOROETHENE	MG/KG	<0.025
TOLUENE	MG/KG	<0.025
1,1,1-TRICHLOROETHANE	MG/KG	<0.050
1,1,2-TRICHLOROETHANE	MG/KG	<0.010
TRICHLOROETHENE	MG/KG	<0.010
TRICHLOROFLUOROMETHANE	MG/KG	<0.010
VINYL CHLORIDE	MG/KG	<0.025
TOTAL XYLENES	MG/KG	<0.025
SURROGATES:		
BROMOCHLOROMETHANE (%)		100
TRIFLUOROTOLUENE (%)		64

Analytical Technologies, Inc.

GAS CHROMATOGRAPHY - QUALITY CONTROL

MSMSD

TEST	: PURGEABLE HALOCARBONS/AROMATICS (EPA 8010/8020)		
MSMSD #	: 40742103	ATI I.D.	: 407419
CLIENT	: PUBLIC SERVICE COMPANY OF NM	DATE EXTRACTED	: 07/29/94
PROJECT #	: (NONE)	DATE ANALYZED	: 08/12/94
PROJECT NAME	: PERSON STATION	SAMPLE MATRIX	: NON-AQ
REF. I.D.	: 40742103	UNITS	: MG/KG

PARAMETER	SAMPLE RESULT	CONC SPIKE	SPIKED SAMPLE	% REC	DUP SPIKE	DUP % REC	RPD
BENZENE	<0.025	0.50	0.59	118	0.58	116	2
CHLOROBENZENE	<0.025	0.50	0.56	112	0.57	114	2
1,1-DICHLOROETHENE	<0.010	0.50	0.53	106	0.49	98	8
TOLUENE	<0.025	0.50	0.60	120	0.61	122	2
TRICHLOROETHENE	<0.010	0.50	0.57	114	0.58	116	2

$$\% \text{ Recovery} = \frac{(\text{Spike Sample Result} - \text{Sample Result})}{\text{Spike Concentration}} \times 100$$

$$\text{RPD (Relative Percent Difference)} = \frac{(\text{Sample Result} - \text{Duplicate Result})}{\text{Average Result}} \times 100$$

Analytical Technologies, Inc.

GAS CHROMATOGRAPHY RESULTS - QUALITY CONTROL

REAGENT BLANK

TEST	: EPA 8010/8020	ATI I.D.	: 407419
BLANK I.D.	: 080794	MATRIX	: NON-AQ
CLIENT	: PUBLIC SERVICE COMPANY OF NM	DATE EXTRACTED	: NA
PROJECT #	: (NONE)	DATE ANALYZED	: 08/07/94
PROJECT NAME	: PERSON STATION	DIL. FACTOR	: 1

PARAMETER	UNITS	
BENZENE	MG/KG	<0.025
BROMODICHLOROMETHANE	MG/KG	<0.010
BROMOFORM	MG/KG	<0.010
BROMOMETHANE	MG/KG	<0.030
CARBON TETRACHLORIDE	MG/KG	<0.010
CHLOROBENZENE	MG/KG	<0.025
CHLOROETHANE	MG/KG	<0.025
CHLOROFORM	MG/KG	<0.060
CHLOROMETHANE	MG/KG	<0.025
DIBROMOCHLOROMETHANE	MG/KG	<0.010
1,2-DIBROMOETHANE (EDB)	MG/KG	<0.010
1,2-DICHLOROBENZENE	MG/KG	<0.025
1,3-DICHLOROBENZENE	MG/KG	<0.025
1,4-DICHLOROBENZENE	MG/KG	<0.025
1,1-DICHLOROETHANE	MG/KG	<0.010
1,2-DICHLOROETHANE (EDC)	MG/KG	<0.010
1,1-DICHLOROETHENE	MG/KG	<0.010
CIS-1,2-DICHLOROETHENE	MG/KG	<0.010
TRANS-1,2-DICHLOROETHENE	MG/KG	<0.010
1,2-DICHLOROPROPANE	MG/KG	<0.010
CIS-1,3-DICHLOROPROPENE	MG/KG	<0.010
TRANS-1,3-DICHLOROPROPENE	MG/KG	<0.010
ETHYLBENZENE	MG/KG	<0.025
METHYLENE CHLORIDE	MG/KG	<0.50
1,1,2,2-TETRACHLOROETHANE	MG/KG	<0.010
TETRACHLOROETHENE	MG/KG	<0.025
TOLUENE	MG/KG	<0.025
1,1,1-TRICHLOROETHANE	MG/KG	<0.050
1,1,2-TRICHLOROETHANE	MG/KG	<0.010
TRICHLOROETHENE	MG/KG	<0.010
TRICHLOROFLUOROMETHANE	MG/KG	<0.010
VINYL CHLORIDE	MG/KG	<0.025
TOTAL XYLENES	MG/KG	<0.025
SURROGATES:		
BROMOCHLOROMETHANE (%)		91
TRIFLUOROTOLUENE (%)		106

Analytical Technologies, Inc.

GAS CHROMATOGRAPHY RESULTS - QUALITY CONTROL

REAGENT BLANK

TEST	: EPA 8010/8020	ATI I.D.	: 407419
BLANK I.D.	: 080894A	MATRIX	: NON-AQ
CLIENT	: PUBLIC SERVICE COMPANY OF NM	DATE EXTRACTED	: NA
PROJECT #	: (NONE)	DATE ANALYZED	: 08/08/94
PROJECT NAME	: PERSON STATION	DIL. FACTOR	: 1

PARAMETER	UNITS	
BENZENE	MG/KG	<0.025
BROMODICHLOROMETHANE	MG/KG	<0.010
BROMOFORM	MG/KG	<0.010
BROMOMETHANE	MG/KG	<0.030
CARBON TETRACHLORIDE	MG/KG	<0.010
CHLOROBENZENE	MG/KG	<0.025
CHLOROETHANE	MG/KG	<0.025
CHLOROFORM	MG/KG	<0.060
CHLOROMETHANE	MG/KG	<0.025
DIBROMOCHLOROMETHANE	MG/KG	<0.010
1,2-DIBROMOETHANE (EDB)	MG/KG	<0.010
1,2-DICHLOROBENZENE	MG/KG	<0.025
1,3-DICHLOROBENZENE	MG/KG	<0.025
1,4-DICHLOROBENZENE	MG/KG	<0.025
1,1-DICHLOROETHANE	MG/KG	<0.010
1,2-DICHLOROETHANE (EDC)	MG/KG	<0.010
1,1-DICHLOROETHENE	MG/KG	<0.010
CIS-1,2-DICHLOROETHENE	MG/KG	<0.010
TRANS-1,2-DICHLOROETHENE	MG/KG	<0.010
1,2-DICHLOROPROPANE	MG/KG	<0.010
CIS-1,3-DICHLOROPROPENE	MG/KG	<0.010
TRANS-1,3-DICHLOROPROPENE	MG/KG	<0.010
ETHYLBENZENE	MG/KG	<0.025
METHYLENE CHLORIDE	MG/KG	<0.50
1,1,2,2-TETRACHLOROETHANE	MG/KG	<0.010
TETRACHLOROETHENE	MG/KG	<0.025
TOLUENE	MG/KG	<0.025
1,1,1-TRICHLOROETHANE	MG/KG	<0.050
1,1,2-TRICHLOROETHANE	MG/KG	<0.010
TRICHLOROETHENE	MG/KG	<0.010
TRICHLOROFLUOROMETHANE	MG/KG	<0.010
VINYL CHLORIDE	MG/KG	<0.025
TOTAL XYLENES	MG/KG	<0.025
SURROGATES:		
BROMOCHLOROMETHANE (%)		101
TRIFLUOROTOLUENE (%)		111

Analytical Technologies, Inc.

GAS CHROMATOGRAPHY RESULTS - QUALITY CONTROL

REAGENT BLANK

TEST	: EPA 8010/8020	ATI I.D.	: 407419
BLANK I.D.	: 080894B	MATRIX	: NON-AQ
CLIENT	: PUBLIC SERVICE COMPANY OF NM	DATE EXTRACTED	: NA
PROJECT #	: (NONE)	DATE ANALYZED	: 08/08/94
PROJECT NAME	: PERSON STATION	DIL. FACTOR	: 1

PARAMETER	UNITS	
BENZENE	MG/KG	<0.025
BROMODICHLOROMETHANE	MG/KG	<0.010
BROMOFORM	MG/KG	<0.010
BROMOMETHANE	MG/KG	<0.030
CARBON TETRACHLORIDE	MG/KG	<0.010
CHLOROBENZENE	MG/KG	<0.025
CHLOROETHANE	MG/KG	<0.025
CHLOROFORM	MG/KG	<0.060
CHLOROMETHANE	MG/KG	<0.025
DIBROMOCHLOROMETHANE	MG/KG	<0.010
1,2-DIBROMOETHANE (EDB)	MG/KG	<0.010
1,2-DICHLOROBENZENE	MG/KG	<0.025
1,3-DICHLOROBENZENE	MG/KG	<0.025
1,4-DICHLOROBENZENE	MG/KG	<0.025
1,1-DICHLOROETHANE	MG/KG	<0.010
1,2-DICHLOROETHANE (EDC)	MG/KG	<0.010
1,1-DICHLOROETHENE	MG/KG	<0.010
CIS-1,2-DICHLOROETHENE	MG/KG	<0.010
TRANS-1,2-DICHLOROETHENE	MG/KG	<0.010
1,2-DICHLOROPROPANE	MG/KG	<0.010
CIS-1,3-DICHLOROPROPENE	MG/KG	<0.010
TRANS-1,3-DICHLOROPROPENE	MG/KG	<0.010
ETHYLBENZENE	MG/KG	<0.025
METHYLENE CHLORIDE	MG/KG	<0.50
1,1,2,2-TETRACHLOROETHANE	MG/KG	<0.010
TETRACHLOROETHENE	MG/KG	0.030
TOLUENE	MG/KG	<0.025
1,1,1-TRICHLOROETHANE	MG/KG	<0.050
1,1,2-TRICHLOROETHANE	MG/KG	<0.010
TRICHLOROETHENE	MG/KG	<0.010
TRICHLOROFLUOROMETHANE	MG/KG	<0.010
VINYL CHLORIDE	MG/KG	<0.025
TOTAL XYLENES	MG/KG	<0.025
SURROGATES:		
BROMOCHLOROMETHANE (%)		96
TRIFLUOROTOLUENE (%)		104

Analytical Technologies, Inc.

GAS CHROMATOGRAPHY RESULTS - QUALITY CONTROL

REAGENT BLANK

TEST	: EPA 8010/8020	ATI I.D.	: 407419
BLANK I.D.	: 080994A	MATRIX	: NON-AQ
CLIENT	: PUBLIC SERVICE COMPANY OF NM	DATE EXTRACTED	: NA
PROJECT #	: (NONE)	DATE ANALYZED	: 08/09/94
PROJECT NAME	: PERSON STATION	DIL. FACTOR	: 1

PARAMETER	UNITS	
BENZENE	MG/KG	<0.025
BROMODICHLOROMETHANE	MG/KG	<0.010
BROMOFORM	MG/KG	<0.010
BROMOMETHANE	MG/KG	<0.030
CARBON TETRACHLORIDE	MG/KG	<0.010
CHLOROBENZENE	MG/KG	<0.025
CHLOROETHANE	MG/KG	<0.025
CHLOROFORM	MG/KG	<0.060
CHLOROMETHANE	MG/KG	<0.025
DIBROMOCHLOROMETHANE	MG/KG	<0.010
1,2-DIBROMOETHANE (EDB)	MG/KG	<0.010
1,2-DICHLOROBENZENE	MG/KG	<0.025
1,3-DICHLOROBENZENE	MG/KG	<0.025
1,4-DICHLOROBENZENE	MG/KG	<0.025
1,1-DICHLOROETHANE	MG/KG	<0.010
1,2-DICHLOROETHANE (EDC)	MG/KG	<0.010
1,1-DICHLOROETHENE	MG/KG	<0.010
CIS-1,2-DICHLOROETHENE	MG/KG	<0.010
TRANS-1,2-DICHLOROETHENE	MG/KG	<0.010
1,2-DICHLOROPROPANE	MG/KG	<0.010
CIS-1,3-DICHLOROPROPENE	MG/KG	<0.010
TRANS-1,3-DICHLOROPROPENE	MG/KG	<0.010
ETHYLBENZENE	MG/KG	<0.025
METHYLENE CHLORIDE	MG/KG	<0.50
1,1,2,2-TETRACHLOROETHANE	MG/KG	<0.010
TETRACHLOROETHENE	MG/KG	<0.025
TOLUENE	MG/KG	<0.025
1,1,1-TRICHLOROETHANE	MG/KG	<0.050
1,1,2-TRICHLOROETHANE	MG/KG	<0.010
TRICHLOROETHENE	MG/KG	<0.010
TRICHLOROFLUOROMETHANE	MG/KG	<0.010
VINYL CHLORIDE	MG/KG	<0.025
TOTAL XYLENES	MG/KG	<0.025
SURROGATES:		
BROMOCHLOROMETHANE (%)		98
TRIFLUOROTOLUENE (%)		103

Analytical Technologies, Inc.

GAS CHROMATOGRAPHY RESULTS - QUALITY CONTROL

REAGENT BLANK

TEST	: EPA 8010/8020	ATI I.D.	: 407419
BLANK I.D.	: 080994B	MATRIX	: NON-AQ
CLIENT	: PUBLIC SERVICE COMPANY OF NM	DATE EXTRACTED	: NA
PROJECT #	: (NONE)	DATE ANALYZED	: 08/09/94
PROJECT NAME	: PERSON STATION	DIL. FACTOR	: 1

PARAMETER	UNITS	
BENZENE	MG/KG	<0.025
BROMODICHLOROMETHANE	MG/KG	<0.010
BROMOFORM	MG/KG	<0.010
BROMOMETHANE	MG/KG	<0.030
CARBON TETRACHLORIDE	MG/KG	<0.010
CHLOROBENZENE	MG/KG	<0.025
CHLOROETHANE	MG/KG	<0.025
CHLOROFORM	MG/KG	<0.060
CHLOROMETHANE	MG/KG	<0.025
DIBROMOCHLOROMETHANE	MG/KG	<0.010
1,2-DIBROMOETHANE (EDB)	MG/KG	<0.010
1,2-DICHLOROBENZENE	MG/KG	<0.025
1,3-DICHLOROBENZENE	MG/KG	<0.025
1,4-DICHLOROBENZENE	MG/KG	<0.025
1,1-DICHLOROETHANE	MG/KG	<0.010
1,2-DICHLOROETHANE (EDC)	MG/KG	<0.010
1,1-DICHLOROETHENE	MG/KG	<0.010
CIS-1,2-DICHLOROETHENE	MG/KG	<0.010
TRANS-1,2-DICHLOROETHENE	MG/KG	<0.010
1,2-DICHLOROPROPANE	MG/KG	<0.010
CIS-1,3-DICHLOROPROPENE	MG/KG	<0.010
TRANS-1,3-DICHLOROPROPENE	MG/KG	<0.010
ETHYLBENZENE	MG/KG	<0.025
METHYLENE CHLORIDE	MG/KG	<0.50
1,1,2,2-TETRACHLOROETHANE	MG/KG	<0.010
TETRACHLOROETHENE	MG/KG	<0.025
TOLUENE	MG/KG	<0.025
1,1,1-TRICHLOROETHANE	MG/KG	<0.050
1,1,2-TRICHLOROETHANE	MG/KG	<0.010
TRICHLOROETHENE	MG/KG	<0.010
TRICHLOROFLUOROMETHANE	MG/KG	<0.010
VINYL CHLORIDE	MG/KG	<0.025
TOTAL XYLENES	MG/KG	<0.025
SURROGATES:		
BROMOCHLOROMETHANE (%)		85
TRIFLUOROTOLUENE (%)		96

Analytical Technologies, Inc.

GAS CHROMATOGRAPHY RESULTS - QUALITY CONTROL

REAGENT BLANK

TEST	: EPA 8010/8020	ATI I.D.	: 407419
BLANK I.D.	: 080994C	MATRIX	: NON-AQ
CLIENT	: PUBLIC SERVICE COMPANY OF NM	DATE EXTRACTED	: NA
PROJECT #	: (NONE)	DATE ANALYZED	: 08/10/94
PROJECT NAME	: PERSON STATION	DIL. FACTOR	: 1

PARAMETER	UNITS	
BENZENE	MG/KG	<0.025
BROMODICHLOROMETHANE	MG/KG	<0.010
BROMOFORM	MG/KG	<0.010
BROMOMETHANE	MG/KG	<0.030
CARBON TETRACHLORIDE	MG/KG	<0.010
CHLOROBENZENE	MG/KG	<0.025
CHLOROETHANE	MG/KG	<0.025
CHLOROFORM	MG/KG	<0.060
CHLOROMETHANE	MG/KG	<0.025
DIBROMOCHLOROMETHANE	MG/KG	<0.010
1,2-DIBROMOETHANE (EDB)	MG/KG	<0.010
1,2-DICHLOROBENZENE	MG/KG	<0.025
1,3-DICHLOROBENZENE	MG/KG	<0.025
1,4-DICHLOROBENZENE	MG/KG	<0.025
1,1-DICHLOROETHANE	MG/KG	<0.010
1,2-DICHLOROETHANE (EDC)	MG/KG	<0.010
1,1-DICHLOROETHENE	MG/KG	<0.010
CIS-1,2-DICHLOROETHENE	MG/KG	<0.010
TRANS-1,2-DICHLOROETHENE	MG/KG	<0.010
1,2-DICHLOROPROPANE	MG/KG	<0.010
CIS-1,3-DICHLOROPROPENE	MG/KG	<0.010
TRANS-1,3-DICHLOROPROPENE	MG/KG	<0.010
ETHYLBENZENE	MG/KG	<0.025
METHYLENE CHLORIDE	MG/KG	<0.50
1,1,2,2-TETRACHLOROETHANE	MG/KG	<0.010
TETRACHLOROETHENE	MG/KG	<0.025
TOLUENE	MG/KG	<0.025
1,1,1-TRICHLOROETHANE	MG/KG	<0.050
1,1,2-TRICHLOROETHANE	MG/KG	<0.010
TRICHLOROETHENE	MG/KG	<0.010
TRICHLOROFLUOROMETHANE	MG/KG	<0.010
VINYL CHLORIDE	MG/KG	<0.025
TOTAL XYLENES	MG/KG	<0.025
SURROGATES:		
BROMOCHLOROMETHANE (%)		102
TRIFLUOROTOLUENE (%)		103

Analytical Technologies, Inc.

GAS CHROMATOGRAPHY RESULTS - QUALITY CONTROL

REAGENT BLANK

TEST	: EPA 8010/8020	ATI I.D.	: 407419
BLANK I.D.	: 080994E	MATRIX	: NON-AQ
CLIENT	: PUBLIC SERVICE COMPANY OF NM	DATE EXTRACTED	: NA
PROJECT #	: (NONE)	DATE ANALYZED	: 08/10/94
PROJECT NAME	: PERSON STATION	DIL. FACTOR	: 1

PARAMETER	UNITS	
BENZENE	MG/KG	<0.025
BROMODICHLOROMETHANE	MG/KG	<0.010
BROMOFORM	MG/KG	<0.010
BROMOMETHANE	MG/KG	<0.030
CARBON TETRACHLORIDE	MG/KG	<0.010
CHLOROBENZENE	MG/KG	<0.025
CHLOROETHANE	MG/KG	<0.025
CHLOROFORM	MG/KG	<0.060
CHLOROMETHANE	MG/KG	<0.025
DIBROMOCHLOROMETHANE	MG/KG	<0.010
1,2-DIBROMOETHANE (EDB)	MG/KG	<0.010
1,2-DICHLOROBENZENE	MG/KG	<0.025
1,3-DICHLOROBENZENE	MG/KG	<0.025
1,4-DICHLOROBENZENE	MG/KG	<0.025
1,1-DICHLOROETHANE	MG/KG	<0.010
1,2-DICHLOROETHANE (EDC)	MG/KG	<0.010
1,1-DICHLOROETHENE	MG/KG	<0.010
CIS-1,2-DICHLOROETHENE	MG/KG	<0.010
TRANS-1,2-DICHLOROETHENE	MG/KG	<0.010
1,2-DICHLOROPROPANE	MG/KG	<0.010
CIS-1,3-DICHLOROPROPENE	MG/KG	<0.010
TRANS-1,3-DICHLOROPROPENE	MG/KG	<0.010
ETHYLBENZENE	MG/KG	<0.025
METHYLENE CHLORIDE	MG/KG	<0.50
1,1,2,2-TETRACHLOROETHANE	MG/KG	<0.010
TETRACHLOROETHENE	MG/KG	<0.025
TOLUENE	MG/KG	<0.025
1,1,1-TRICHLOROETHANE	MG/KG	<0.050
1,1,2-TRICHLOROETHANE	MG/KG	<0.010
TRICHLOROETHENE	MG/KG	<0.010
TRICHLOROFLUOROMETHANE	MG/KG	<0.010
VINYL CHLORIDE	MG/KG	<0.025
TOTAL XYLENES	MG/KG	<0.025
SURROGATES:		
BROMOCHLOROMETHANE (%)		93
TRIFLUOROTOLUENE (%)		108

Analytical Technologies, Inc.

GAS CHROMATOGRAPHY RESULTS - QUALITY CONTROL

REAGENT BLANK

TEST	: EPA 8010/8020	ATI I.D.	: 407419
BLANK I.D.	: 081194A	MATRIX	: NON-AQ
CLIENT	: PUBLIC SERVICE COMPANY OF NM	DATE EXTRACTED	: NA
PROJECT #	: (NONE)	DATE ANALYZED	: 08/11/94
PROJECT NAME	: PERSON STATION	DIL. FACTOR	: 1

PARAMETER	UNITS	
BENZENE	MG/KG	<0.025
BROMODICHLOROMETHANE	MG/KG	<0.010
BROMOFORM	MG/KG	<0.010
BROMOMETHANE	MG/KG	<0.030
CARBON TETRACHLORIDE	MG/KG	<0.010
CHLOROBENZENE	MG/KG	<0.025
CHLOROETHANE	MG/KG	<0.025
CHLOROFORM	MG/KG	<0.060
CHLOROMETHANE	MG/KG	<0.025
DIBROMOCHLOROMETHANE	MG/KG	<0.010
1,2-DIBROMOETHANE (EDB)	MG/KG	<0.010
1,2-DICHLOROBENZENE	MG/KG	<0.025
1,3-DICHLOROBENZENE	MG/KG	<0.025
1,4-DICHLOROBENZENE	MG/KG	<0.025
1,1-DICHLOROETHANE	MG/KG	<0.010
1,2-DICHLOROETHANE (EDC)	MG/KG	<0.010
1,1-DICHLOROETHENE	MG/KG	<0.010
CIS-1,2-DICHLOROETHENE	MG/KG	<0.010
TRANS-1,2-DICHLOROETHENE	MG/KG	<0.010
1,2-DICHLOROPROPANE	MG/KG	<0.010
CIS-1,3-DICHLOROPROPENE	MG/KG	<0.010
TRANS-1,3-DICHLOROPROPENE	MG/KG	<0.010
ETHYLBENZENE	MG/KG	<0.025
METHYLENE CHLORIDE	MG/KG	<0.50
1,1,2,2-TETRACHLOROETHANE	MG/KG	<0.010
TETRACHLOROETHENE	MG/KG	<0.025
TOLUENE	MG/KG	<0.025
1,1,1-TRICHLOROETHANE	MG/KG	<0.050
1,1,2-TRICHLOROETHANE	MG/KG	<0.010
TRICHLOROETHENE	MG/KG	<0.010
TRICHLOROFLUOROMETHANE	MG/KG	<0.010
VINYL CHLORIDE	MG/KG	<0.025
TOTAL XYLENES	MG/KG	<0.025
SURROGATES:		
BROMOCHLOROMETHANE (%)		89
TRIFLUOROTOLUENE (%)		107

Analytical Technologies, Inc.

GAS CHROMATOGRAPHY RESULTS - QUALITY CONTROL

REAGENT BLANK

TEST	: EPA 8010/8020	ATI I.D.	: 407419
BLANK I.D.	: 081194B	MATRIX	: NON-AQ
CLIENT	: PUBLIC SERVICE COMPANY OF NM	DATE EXTRACTED	: NA
PROJECT #	: (NONE)	DATE ANALYZED	: 08/11/94
PROJECT NAME	: PERSON STATION	DIL. FACTOR	: 1

PARAMETER	UNITS	
BENZENE	MG/KG	<0.025
BROMODICHLOROMETHANE	MG/KG	<0.010
BROMOFORM	MG/KG	<0.010
BROMOMETHANE	MG/KG	<0.030
CARBON TETRACHLORIDE	MG/KG	<0.010
CHLOROBENZENE	MG/KG	<0.025
CHLOROETHANE	MG/KG	<0.025
CHLOROFORM	MG/KG	<0.060
CHLOROMETHANE	MG/KG	<0.025
DIBROMOCHLOROMETHANE	MG/KG	<0.010
1,2-DIBROMOETHANE (EDB)	MG/KG	<0.010
1,2-DICHLOROBENZENE	MG/KG	<0.025
1,3-DICHLOROBENZENE	MG/KG	<0.025
1,4-DICHLOROBENZENE	MG/KG	<0.025
1,1-DICHLOROETHANE	MG/KG	<0.010
1,2-DICHLOROETHANE (EDC)	MG/KG	<0.010
1,1-DICHLOROETHENE	MG/KG	<0.010
CIS-1,2-DICHLOROETHENE	MG/KG	<0.010
TRANS-1,2-DICHLOROETHENE	MG/KG	<0.010
1,2-DICHLOROPROPANE	MG/KG	<0.010
CIS-1,3-DICHLOROPROPENE	MG/KG	<0.010
TRANS-1,3-DICHLOROPROPENE	MG/KG	<0.010
ETHYLBENZENE	MG/KG	<0.025
METHYLENE CHLORIDE	MG/KG	<0.50
1,1,2,2-TETRACHLOROETHANE	MG/KG	<0.010
TETRACHLOROETHENE	MG/KG	<0.025
TOLUENE	MG/KG	<0.025
1,1,1-TRICHLOROETHANE	MG/KG	<0.050
1,1,2-TRICHLOROETHANE	MG/KG	<0.010
TRICHLOROETHENE	MG/KG	<0.010
TRICHLOROFLUOROMETHANE	MG/KG	<0.010
VINYL CHLORIDE	MG/KG	<0.025
TOTAL XYLENES	MG/KG	<0.025
SURROGATES:		
BROMOCHLOROMETHANE (%)		77
TRIFLUOROTOLUENE (%)		106

Analytical Technologies, Inc.

GAS CHROMATOGRAPHY - QUALITY CONTROL

MSMSD

TEST	: PURGEABLE HALOCARBONS/AROMATICS (EPA 8010/8020)		
MSMSD #	: 40741918	ATI I.D.	: 407419
CLIENT	: PUBLIC SERVICE COMPANY OF NM	DATE EXTRACTED	: 07/28/94
PROJECT #	: (NONE)	DATE ANALYZED	: 08/11/94
PROJECT NAME	: PERSON STATION	SAMPLE MATRIX	: NON-AQ
REF. I.D.	: 40741918	UNITS	: MG/KG

PARAMETER	SAMPLE RESULT	CONC SPIKE	SPIKED SAMPLE	% REC	DUP SPIKE	DUP % REC	RPD
BENZENE	<0.025	0.50	0.58	116	0.57	114	2
CHLOROBENZENE	<0.025	0.50	0.57	114	0.55	110	4
1,1-DICHLOROETHENE	<0.010	0.50	0.33	66	0.38	76	14
TOLUENE	<0.025	0.50	0.61	122	0.59	118	3
TRICHLOROETHENE	<0.010	0.50	0.58	116	0.58	116	0

$$\% \text{ Recovery} = \frac{(\text{Spike Sample Result} - \text{Sample Result})}{\text{Spike Concentration}} \times 100$$

$$\text{RPD (Relative Percent Difference)} = \frac{(\text{Sample Result} - \text{Duplicate Result})}{\text{Average Result}} \times 100$$

Analytical Technologies, Inc.

GAS CHROMATOGRAPHY - QUALITY CONTROL

MSMSD

TEST	: PURGEABLE HALOCARBONS/AROMATICS (EPA 8010/8020)		
MSMSD #	: 40741925	ATI I.D.	: 407419
CLIENT	: PUBLIC SERVICE COMPANY OF NM	DATE EXTRACTED	: 07/28/94
PROJECT #	: (NONE)	DATE ANALYZED	: 08/11/94
PROJECT NAME	: PERSON STATION	SAMPLE MATRIX	: NON-AQ
REF. I.D.	: 40741925	UNITS	: MG/KG

PARAMETER	SAMPLE RESULT	CONC SPIKE	SPIKED SAMPLE	% REC	DUP SPIKE	DUP % REC	RPD
BENZENE	<0.025	0.50	0.60	120	0.60	120	0
CHLOROBENZENE	<0.025	0.50	0.58	116	0.59	118	2
1,1-DICHLOROETHENE	<0.010	0.50	0.59	119	0.58	116	2
TOLUENE	<0.025	0.50	0.63	126	0.64	128	2
TRICHLOROETHENE	<0.010	0.50	0.38	77	0.39	77	3

$$\% \text{ Recovery} = \frac{(\text{Spike Sample Result} - \text{Sample Result})}{\text{Spike Concentration}} \times 100$$

$$\text{RPD (Relative Percent Difference)} = \frac{(\text{Sample Result} - \text{Duplicate Result})}{\text{Average Result}} \times 100$$

Analytical**Technologies,**Inc., Albuquerque, NM
San Diego • Phoenix • Seattle • Pensacola • Ft. Collins • Portland • Albuquerque

CHAIN OF CUSTODY

DATE: 7/28/94 PAGE 1 OF 3

ATI LAB I.D. 407419

PLEASE FILL THIS FORM IN COMPLETELY. SHADED AREAS ARE FOR LAB USE ONLY.

PROJECT MANAGER: Ron Johnson

COMPANY: P.N.M.
ADDRESS: Alvarado Square 0408
Albuquerque, NM 87158
PHONE: (505) 848-2998
FAX: (505) 848-2340

BILL TO:
COMPANY: SAME
ADDRESS: Attn: Ron Johnson

ANALYSIS REQUEST

SAMPLE ID		DATE	TIME	MATRIX	LAB ID	Chlorinated Hydrocarbons (601/8010)	Aromatic Hydrocarbons (602/8020)	NUMBER OF CONTAINERS
VEW-2	✓	7/28/94	0920	S	-01	X	X	2
VEW-4	✓		0930	S	-02	X	X	2
VEW-9	✓		0936	S	-03	X	X	2
VEW-14	✓		0950	S	-04	X	X	2
VEW-19	✓		1005	S	-05	X	X	2
VEW-24	✓		1012	S	-06	X	X	2
VEW-29	✓		1020	S	-07	X	X	2
VEW-34	✓		1040	S	-08	X	X	2
Trip Blank I	✓	7/27/94		MeOH	-09	X	X	1

Petroleum Hydrocarbons (418.1); (MOD 8015) Gas/Diesel; Diesel/Gasoline/BTXE/MTBE (MOD 8015/8020); BTXE/MTBE (8020); SDWA Volatiles (502.1/503.1), 502.2 Reg. & Unreg.; Pesticides/PCB (608/8080); Herbicides (615/8150); Base/Neutral/Acid Compounds GC/MS (625/8270); Volatile Organics GC/MS (624/8240); Polynuclear Aromatics (610/8310); SDWA Primary Standards - Arizona; SDWA Secondary Standards - Arizona; SDWA Primary Standards - Federal; SDWA Secondary Standards - Federal; The 13 Priority Pollutant Metals; RCRA Metals by Total Digestion; RCRA Metals by TCLP (1311)

PROJECT INFORMATION		SAMPLE RECEIPT	
PROJ. NO.:		NO. CONTAINERS	17
PROJ. NAME:	Person Station	CUSTODY SEALS	(Y) N / NA
P.O. NO.:		RECEIVED INTACT	Y
SHIPPED VIA:		RECEIVED COLD	Y

PRIOR AUTHORIZATION IS REQUIRED FOR RUSH PROJECTS

(RUSH) ☐ 24hr ☐ 48hr ☐ 72hr ☐ 1 WEEK (NORMAL) ☒ 2 WEEK

Comments:
matrix: Soil in Methanol

Yes: Data disk

SAMPLED & RELINQUISHED BY: 1.	RELINQUISHED BY: 2.	RELINQUISHED BY: 3.
Signature: Ron Johnson Time: 1625	Signature: Time:	Signature: Time:
Printed Name: Ron Johnson Date: 7/28/94	Printed Name: Date:	Printed Name: Date:
Company: PNM Phone: 848-2998	Company:	Company:

RECEIVED BY: 1.	RECEIVED BY: 2.	RECEIVED BY: (LAB) 3.
Signature: Time:	Signature: Time:	Signature: Time: 4:15 pm
Printed Name: Date:	Printed Name: Date:	Printed Name: Date: 7/28/94
Company:	Company:	Analytical Technologies, Inc.

Analytical Technologies, Inc., Albuquerque, NM

San Diego • Phoenix • Seattle • Pensacola • Ft. Collins • Portland • Albuquerque

CHAIN OF CUSTODY

DATE: 7/28/94 PAGE 2 OF 3

ATI LAB I.D. 407419

PLEASE FILL THIS FORM IN COMPLETELY. SHADED AREAS ARE FOR LAB USE ONLY.

PROJECT MANAGER: Ron Johnson

COMPANY: P.N.M.
ADDRESS: Alvarado Square -0408
Albuquerque, NM 87158
PHONE: (505) 848-2998
FAX: (505) 848-2340

BILL TO:
COMPANY: SAME
ADDRESS:
Attn: Ron Johnson

ANALYSIS REQUEST

SAMPLE ID	DATE	TIME	MATRIX	LAB ID	Chlorinated Hydrocarbons (601/8010)	Aromatic Hydrocarbons (602/8020)	NUMBER OF CONTAINERS
VEW-39	7/28/94	1050	S	-10	X	X	2
VEW-44A		1120	S	-11	X	X	2
VEW-44B		1120	S	-12	X	X	2
VEW-51		1135	S	-13	X	X	2
VEW-54		1154	S	-14	X	X	2
VEW-59		1315	S	-15	X	X	2
VEW-64		1325	S	-16	X	X	2
VEW-74		1348	S	-17	X	X	2
VEW-79A		1358	S	-18	X	X	2

Petroleum Hydrocarbons (418.1); (MOD 8015) Gas/Diesel; Diesel/Gasoline/BTXE/MTBE (MOD 8015/8020); BTXE/MTBE (8020); SDWA Volatiles (502.1/503.1), 502.2 Reg. & Unreg.; Pesticides/PCB (608/8080); Herbicides (615/8150); Base/Neutral/Acid Compounds GC/MS (625/8270); Volatile Organics GC/MS (624/8240); Polynuclear Aromatics (610/8310); SDWA Primary Standards - Arizona; SDWA Secondary Standards - Arizona; SDWA Primary Standards - Federal; SDWA Secondary Standards - Federal; The 13 Priority Pollutant Metals; RCRA Metals by Total Digestion; RCRA Metals by TCLP (1311)

PROJECT INFORMATION		SAMPLE RECEIPT	
PROJ. NO.:		NO. CONTAINERS	18
PROJ. NAME:	Person Station	CUSTODY SEALS	(Y) N / NA
P.O. NO.:		RECEIVED INTACT	Y
SHIPPED VIA:		RECEIVED COLD	Y

PRIOR AUTHORIZATION IS REQUIRED FOR RUSH PROJECTS

(RUSH) ☐ 24hr ☐ 48hr ☐ 72hr ☐ 1 WEEK (NORMAL) ☒ 2 WEEK

Comments:
Matrix: Soil in Methanol
yes: data disk

SAMPLED & RELINQUISHED BY: 1.	RELINQUISHED BY: 2.	RELINQUISHED BY: 3.
Signature: Ron Johnson Time: 1625	Signature: Time:	Signature: Time:
Printed Name: Ron Johnson Date: 7/28/94	Printed Name: Date:	Printed Name: Date:
Company: PNM Phone: 848-2498	Company:	Company:

RECEIVED BY: 1.	RECEIVED BY: 2.	RECEIVED BY: (LAB) 3.
Signature: Time:	Signature: Time:	Signature: Time: 16:25
Printed Name: Date:	Printed Name: Date:	Printed Name: Date: 7/28/94
Company:	Company:	Analytical Technologies, Inc.

AnalyticalTechnologies, Inc., Albuquerque, NM
San Diego • Phoenix • Seattle • Pensacola • Ft. Collins • Portland • Albuquerque

CHAIN OF CUSTODY

DATE: 7/28/94 PAGE 3 OF 3

ATI LAB I.D. 407419

PLEASE FILL THIS FORM IN COMPLETELY. SHADED AREAS ARE FOR LAB USE ONLY.

PROJECT MANAGER: Ron Johnson

COMPANY: P.N.M.
ADDRESS: Alvarado Square -0408
Albuquerque NM 87158
PHONE: (505) 848-2998
FAX: (505) 848-2340

BILL TO: SAME
COMPANY:
ADDRESS:
Attn: Ron Johnson

ANALYSIS REQUEST

SAMPLE ID		DATE	TIME	MATRIX	LAB ID	Chlorinated Hydrocarbons (601/8010)	Aromatic Hydrocarbons (602/8020)	NUMBER OF CONTAINERS
VEW-79B	✓	7/28/94	1358	S	-19	X	X	2
VEW-84	✓		1410		-20	X	X	2
VEW-88	✓		1423		-21	X	X	2
VEW-94	✓		1451		-22	X	X	2
EQUIP. BLANK	✓		1459	MeOH	-23	X	X	1
VEW-100	✓		1508	S	-24	X	X	2
VEW-104	✓		1521		-25	X	X	2
VEW-109	✓		1549		-26	X	X	2
VEW-69	✓		1339		-27	X	X	2

PROJECT INFORMATION		SAMPLE RECEIPT	
PROJ. NO.:		NO. CONTAINERS	17
PROJ. NAME:	Person Station	CUSTODY SEALS	(Y) N / NA
P.O. NO.:		RECEIVED INTACT	Y
SHIPPED VIA:		RECEIVED COLD	Y

PRIOR AUTHORIZATION IS REQUIRED FOR RUSH PROJECTS

(RUSH) ☐ 24hr ☐ 48hr ☐ 72hr ☐ 1 WEEK (NORMAL) ☒ 2 WEEK

Comments:
Matrix: soil in Methanol
Yes: Data disk

SAMPLED & RELINQUISHED BY: 1.	RELINQUISHED BY: 2.	RELINQUISHED BY: 3.
Signature: Time: 1625	Signature: Time:	Signature: Time:
Printed Name: Ron Johnson Date: 7/28/94	Printed Name: Date:	Printed Name: Date:
Company: PNM Phone: 848-2998	Company:	Company:

RECEIVED BY: 1.	RECEIVED BY: 2.	RECEIVED BY:(LAB) 3.
Signature: Time:	Signature: Time:	Signature: Time: 1625
Printed Name: Date:	Printed Name: Date:	Printed Name: Date: 7/28/94
Company:	Company:	Analytical Technologies, Inc.

Analytical Technologies, Inc., Albuquerque, NM

San Diego • Phoenix • Seattle • Pensacola • Ft. Collins • Portland • Albuquerque

CHAIN OF CUSTODY

DATE: 7/28 PAGE 1 OF 1

ATI LAB I.D. 407419

PLEASE FILL THIS FORM IN COMPLETELY. SHADED AREAS ARE FOR LAB USE ONLY.

PROJECT MANAGER: Ron Johnson

COMPANY: P.N.M.
ADDRESS: Alvarado Square - 408
Albuquerque NM 87158
PHONE: (505) 848-2998
FAX: (505) 848-2340

BILL TO: SAME
COMPANY:
ADDRESS:
Attn: Ron Johnson

ANALYSIS REQUEST

SAMPLE ID		DATE	TIME	MATRIX	LAB ID	Petroleum Hydrocarbons (418.1)	(MOD 8015) Gas/Diesel	Diesel/Gasoline/BTXE/MTBE (MOD 8015/8020)	BTXE/MTBE (8020)	8015	Chlorinated Hydrocarbons (601/8010)	Aromatic Hydrocarbons (602/8020)	SDWA Volatiles (502.1/503.1), 502.2 Reg. & Unreg.	Pesticides/PCB (608/8080)	Herbicides (615/8150)	Base/Neutral/Acid Compounds GC/MS (625/8270)	Volatile Organics GC/MS (624/8240)	Polynuclear Aromatics (610/8310)	SDWA Primary Standards - Arizona	SDWA Secondary Standards - Arizona	SDWA Primary Standards - Federal	SDWA Secondary Standards - Federal	The 13 Priority Pollutant Metals	RCRA Metals by Total Digestion	RCRA Metals by TCLP (1311)	NUMBER OF CONTAINERS
VEW-35	✓	7/28/94	1050	S	-28				X																	1
VEW-45	✓	↓	1120	↓	-29				X																	1

PROJECT INFORMATION

PROJ. NO.:
PROJ. NAME: Person Station
P.O. NO.:
SHIPPED VIA:

SAMPLE RECEIPT

NO. CONTAINERS	2
CUSTODY SEALS	(Y) N / NA
RECEIVED INTACT	Y
RECEIVED COLD	Y

PRIOR AUTHORIZATION IS REQUIRED FOR RUSH PROJECTS

(RUSH) ☐ 24hr ☐ 48hr ☐ 72hr ☐ 1 WEEK (NORMAL) ☒ ~~2 WEEK~~

Comments:
Yes: data dash

SAMPLED & RELINQUISHED BY: 1.	RELINQUISHED BY: 2.	RELINQUISHED BY: 3.
Signature: Ron Johnson Time: 1630	Signature: Time:	Signature: Time:
Printed Name: Ron Johnson Date: 7/28/94	Printed Name: Date:	Printed Name: Date:
Company: PNM Phone: 848 2998	Company:	Company:

RECEIVED BY: 1.	RECEIVED BY: 2.	RECEIVED BY: (LAB) 3.
Signature: Time:	Signature: Time:	Signature: HM Time: 1650
Printed Name: Date:	Printed Name: Date:	Printed Name: HM Rubinstein Date: 7/28/94
Company:	Company:	Analytical Technologies, Inc.

ATI Labs: San Diego (619) 458-9141 • Phoenix (602) 496-4400 • Seattle (206) 228-8335 • Pensacola (904) 474-1001 • Portland (503) 684-0447 • Albuquerque (505) 344-3777

DISTRIBUTION: White, Canary - ATI • Pink - ORIGINATOR

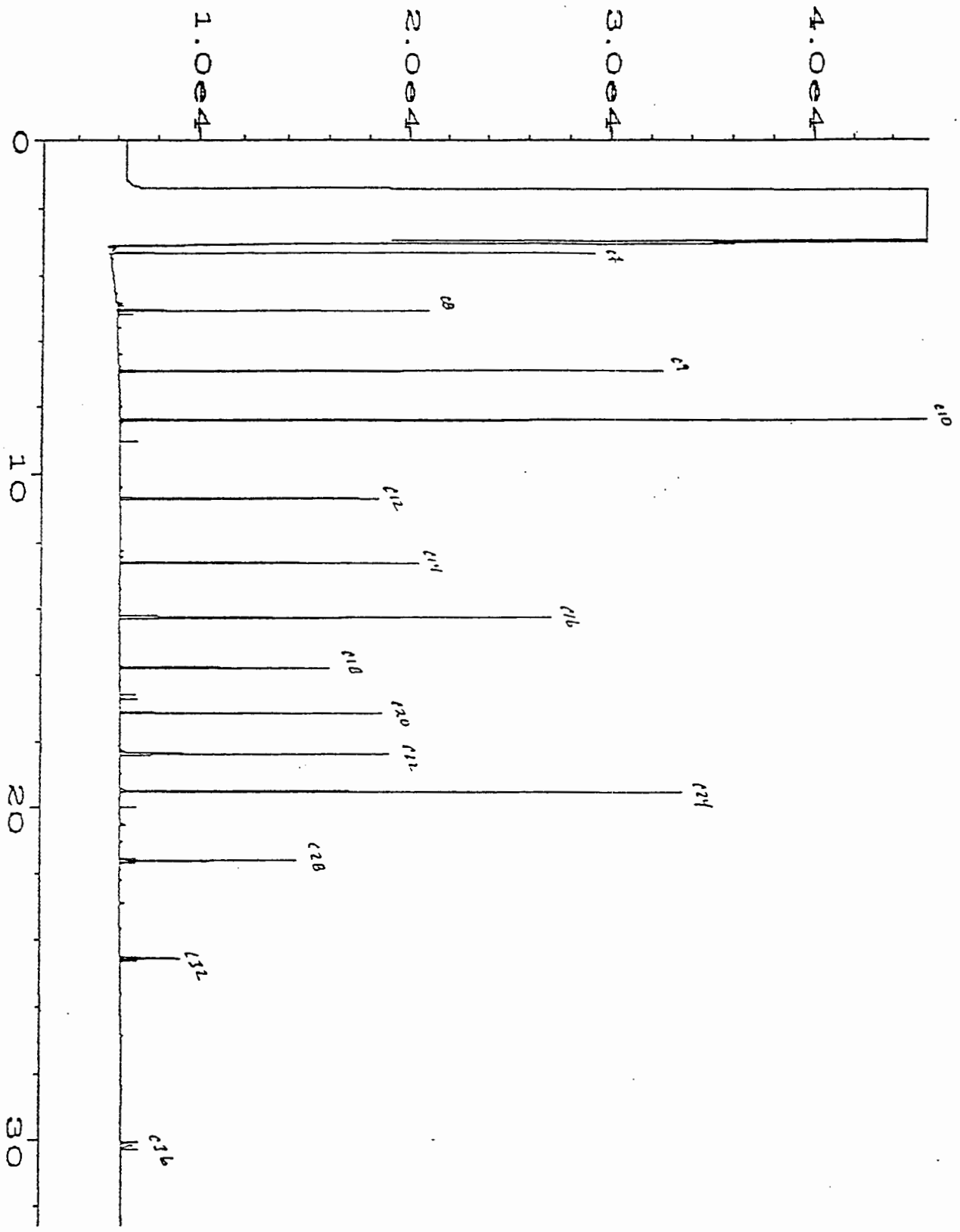

Data File Name	: C:\HPCHEM\1\DATA\01APR94\011F0701.D		
Operator	: CFF	Page Number	: 1
Instrument	: GC#1 5890	Vial Number	: 11
Sample Name	: RT STD C7 TO C36	Injection Number	: 1
Run Time Bar Code:		Sequence Line	: 7
Acquired on	: 01 Apr 94 06:19 PM	Instrument Method	: SDF0301.M
Report Created on	: 01 Apr 94 07:03 PM	Analysis Method	: SDF0301.M
Sample Info	:		

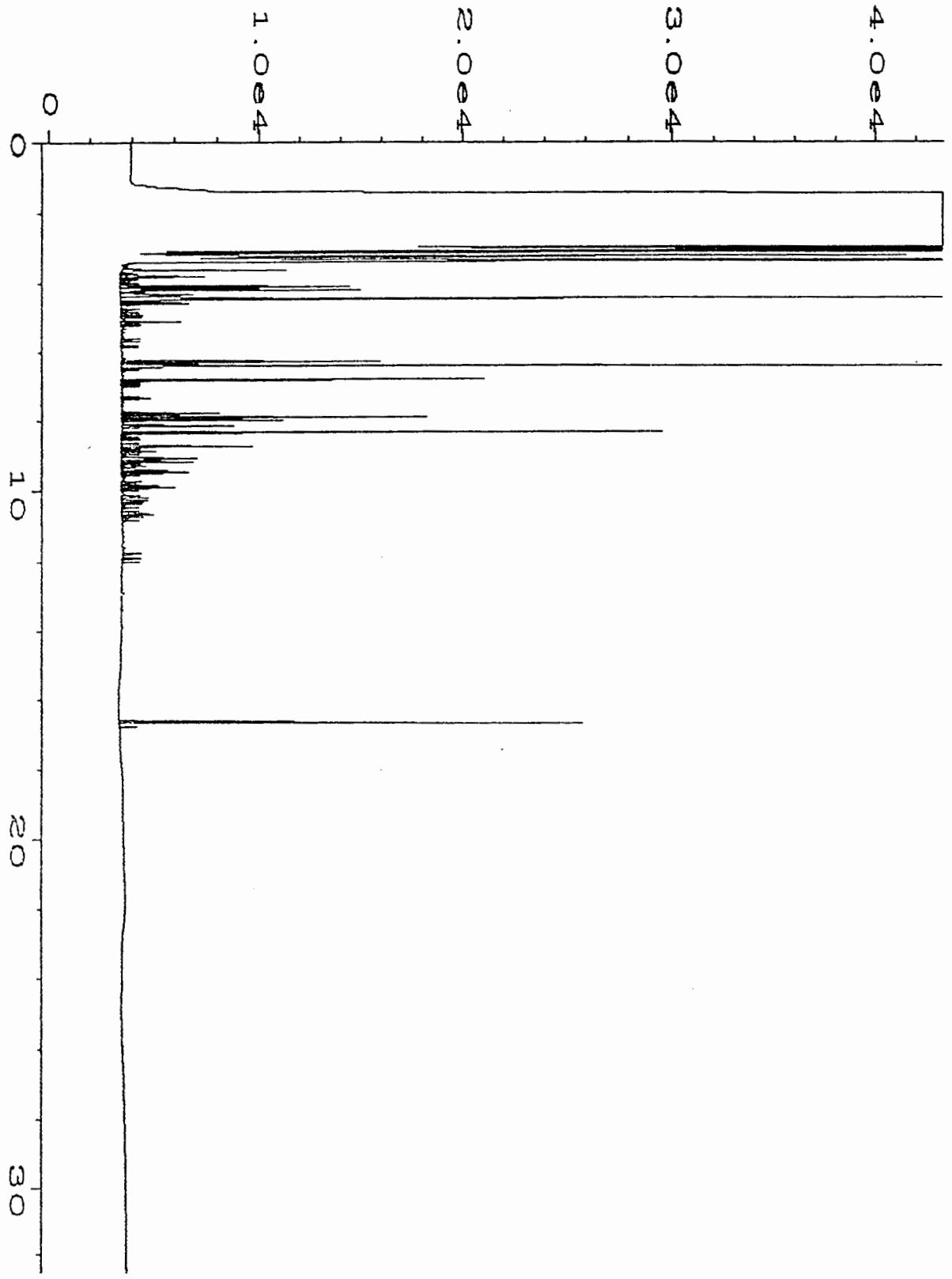

Data File Name	: C:\HPCHEM\1\DATA\01AUG94\013F0601.D		
Operator	: CHRIS F.	Page Number	: 1
Instrument	: GC#1 5890	Vial Number	: 13
Sample Name	: GAS Gas line	Injection Number	: 1
Run Time Bar Code:		Sequence Line	: 6
Acquired on	: 01 Aug 94 07:51 PM	Instrument Method	: SDF0705.MTH
Report Created on	: 02 Aug 94 01:47 PM	Analysis Method	: SGF0705.MTH

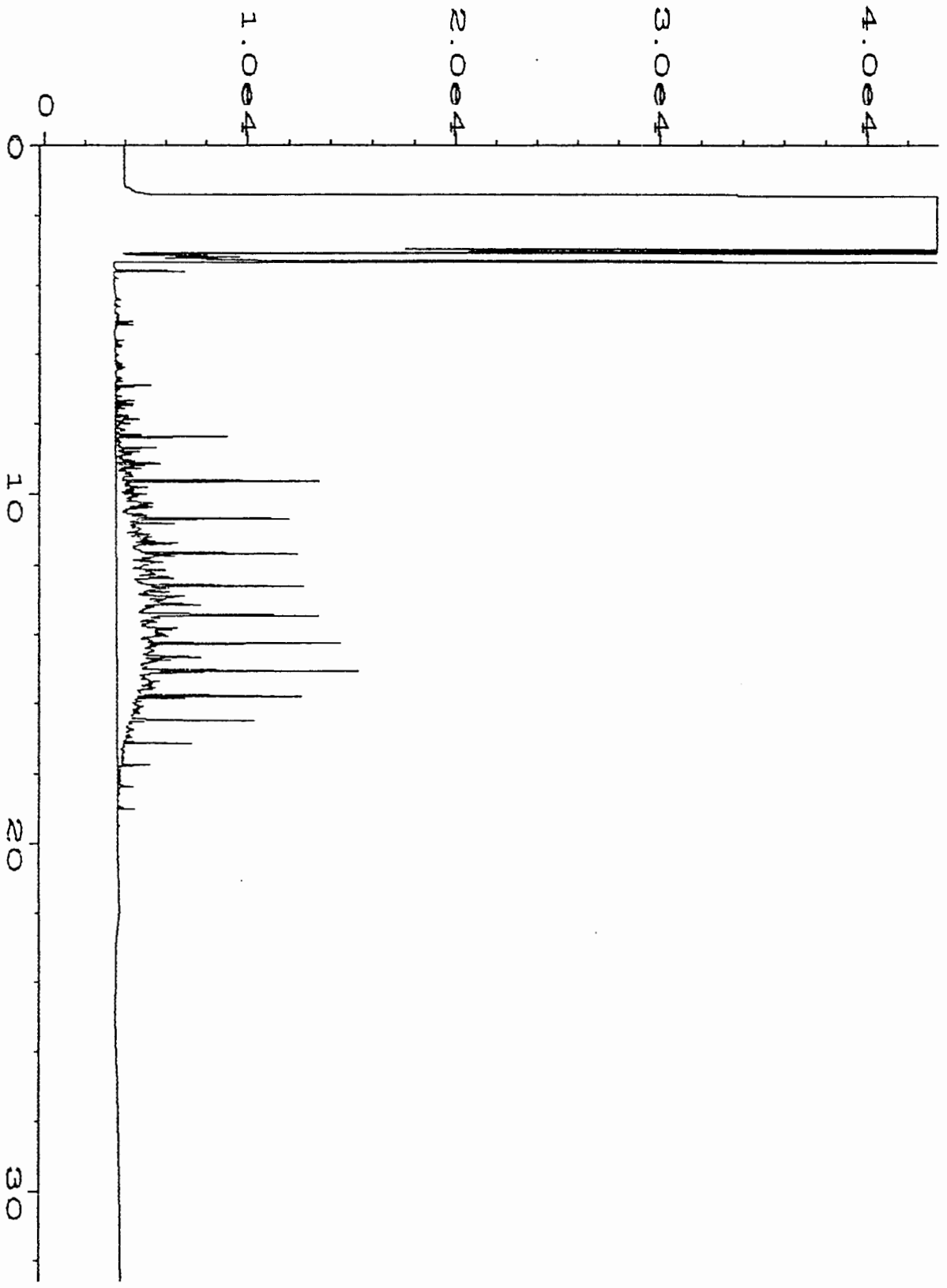

Data File Name	: C:\HPCHEM\1\DATA\01AUG94\012F0501.D		
Operator	: CHRIS F.	Page Number	: 1
Instrument	: GC#1 5890	Vial Number	: 12
Sample Name	: DSL Diesel	Injection Number	: 1
Run Time Bar Code:		Sequence Line	: 5
Acquired on	: 01 Aug 94 06:56 PM	Instrument Method	: SGF0705.MTH
Report Created on	: 02 Aug 94 01:46 PM	Analysis Method	: SDF0705.MTH

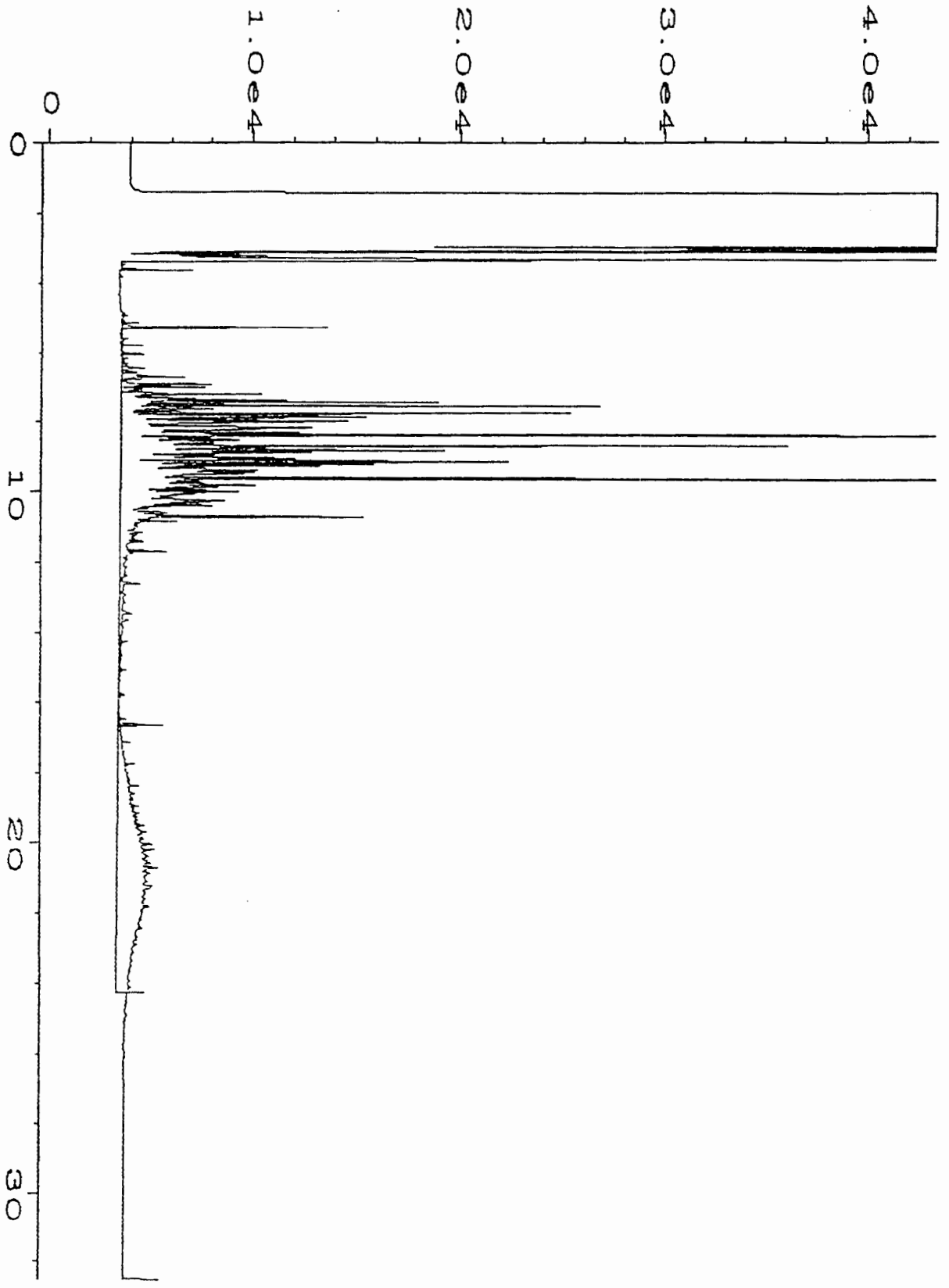

Data File Name	: C:\HPCHEM\1\DATA\01AUG94\010F0401.D		
Operator	: CHRIS F.	Page Number	: 1
Instrument	: GC#1 5890	Vial Number	: 10
Sample Name	: 407419-28*10	Injection Number	: 1
Run Time Bar Code:		Sequence Line	: 4
Acquired on	: 01 Aug 94 05:25 PM	Instrument Method	: SDF0705.MTH
Report Created on	: 02 Aug 94 01:42 PM	Analysis Method	: SDF0705.MTH

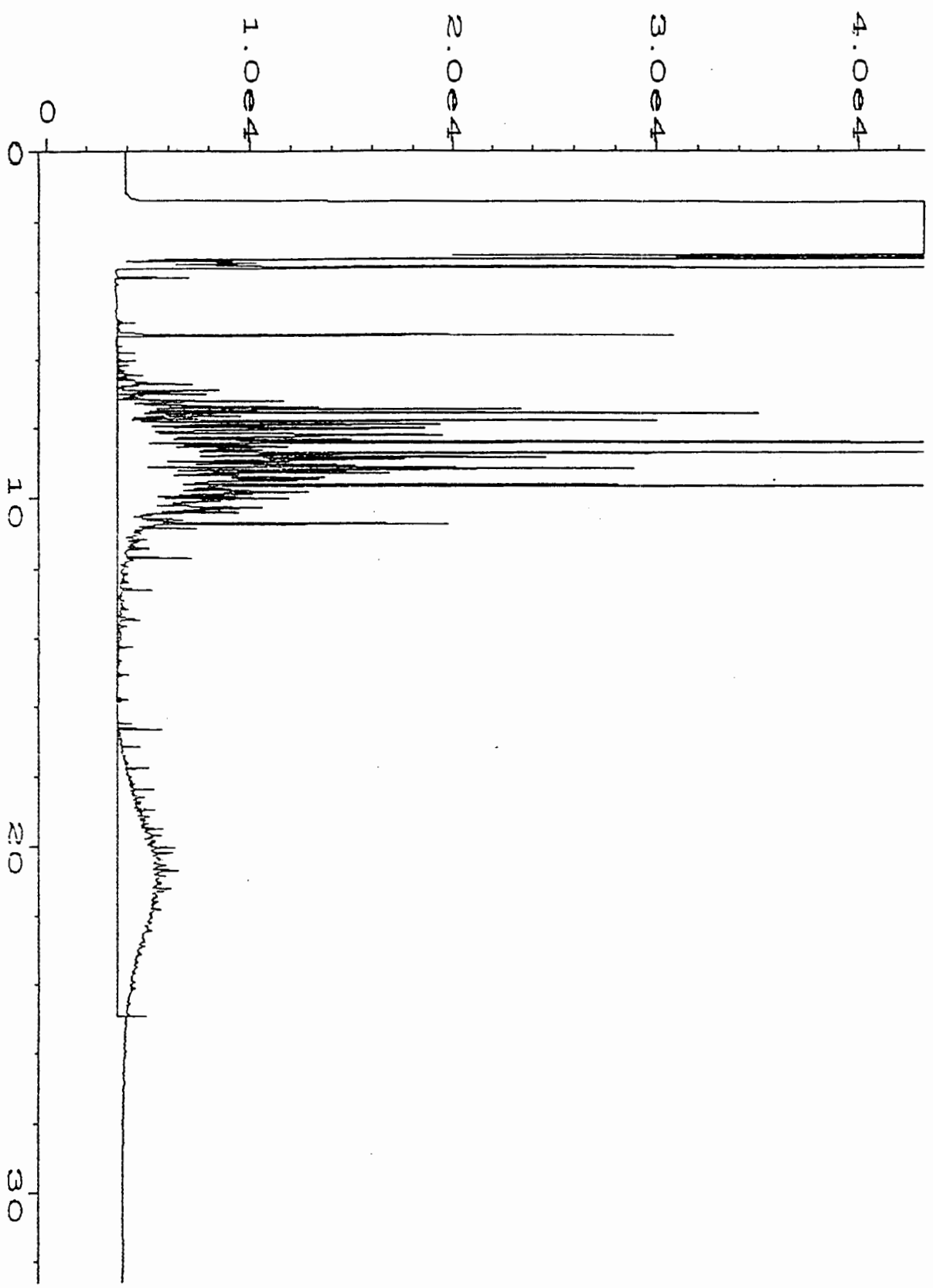

Data File Name	: C:\HPCHEM\1\DATA\01AUG94\011F0401.D		
Operator	: CHRIS F.	Page Number	: 1
Instrument	: GC#1 5890	Vial Number	: 11
Sample Name	: 407419-29*10	Injection Number	: 1
Run Time Bar Code:		Sequence Line	: 4
Acquired on	: 01 Aug 94 05:59 PM	Instrument Method	: SDF0705.MTH
Report Created on	: 02 Aug 94 01:45 PM	Analysis Method	: SDF0705.MTH

Analytical Technologies, Inc.

2709-D Pan American Freeway, NE Albuquerque, NM 87107
Phone (505) 344-3777 FAX (505) 344-4413

ATI I.D. **407421**

August 16, 1994

Public Service Company of NM
Alvarado Square-MS 0408
Albuquerque, NM 87158

Project Name/Number: PERSON STATION

Attention: Ron Johnson

On **07/29/94**, Analytical Technologies, Inc., (ADHS License No. AZ0015), received a request to analyze **non-aqueous** samples. The samples were analyzed with EPA methodology or equivalent methods. The results of these analyses and the quality control data, which follow each set of analyses, are enclosed.

If you have any questions or comments, please do not hesitate to contact us at (505) 344-3777.

Letitia Krakowski, Ph.D.
Project Manager

H. Mitchell Rubenstein, Ph.D.
Laboratory Manager

MR:jt

Enclosure

Analytical Technologies, Inc.

CLIENT : PUBLIC SERVICE COMPANY OF NM DATE RECEIVED : 07/29/94
PROJECT # : (NONE)
PROJECT NAME : PERSON STATION REPORT DATE : 08/16/94

ATI ID: 407421

ATI #	CLIENT DESCRIPTION	MATRIX	DATE COLLECTED
01	VEW-114	NON-AQ	07/29/94
02	VEW-119	NON-AQ	07/29/94
03	VEW-124	NON-AQ	07/29/94
04	VEW-129	NON-AQ	07/29/94
05	VEW-134	NON-AQ	07/29/94
06	TRIP BLANK	NON-AQ	07/27/94

---TOTALS---

MATRIX	#SAMPLES
NON-AQ	6

ATI STANDARD DISPOSAL PRACTICE

The samples from this project will be disposed of in thirty (30) days from the date of this report. If an extended storage period is required, please contact our sample control department before the scheduled disposal date.

Analytical Technologies, Inc.

GAS CHROMATOGRAPHY RESULTS

TEST : PURGEABLE HALOCARBONS/AROMATICS (EPA 8010/8020)
CLIENT : PUBLIC SERVICE COMPANY OF NM ATI I.D.: 407421
PROJECT # : (NONE)
PROJECT NAME : PERSON STATION

SAMPLE ID. #	CLIENT I.D.	MATRIX	DATE SAMPLED	DATE EXTRACTED	DATE ANALYZED	DIL. FACTOR
01	VEW-114	NON-AQ	07/29/94	07/29/94	08/12/94	1
02	VEW-119	NON-AQ	07/29/94	07/29/94	08/12/94	1
03	VEW-124	NON-AQ	07/29/94	07/29/94	08/12/94	1

PARAMETER	UNITS	01	02	03
BENZENE	MG/KG	<0.025	<0.025	<0.025
BROMODICHLOROMETHANE	MG/KG	<0.010	<0.010	<0.010
BROMOFORM	MG/KG	<0.010	<0.010	<0.010
BROMOMETHANE	MG/KG	<0.030	<0.030	<0.030
CARBON TETRACHLORIDE	MG/KG	<0.010	<0.010	<0.010
CHLOROBENZENE	MG/KG	<0.025	<0.025	<0.025
CHLOROETHANE	MG/KG	<0.025	<0.025	<0.025
CHLOROFORM	MG/KG	<0.060	<0.060	<0.060
CHLOROMETHANE	MG/KG	<0.025	<0.025	<0.025
DIBROMOCHLOROMETHANE	MG/KG	<0.010	<0.010	<0.010
1,2-DIBROMOETHANE (EDB)	MG/KG	<0.010	<0.010	<0.010
1,2-DICHLOROBENZENE	MG/KG	<0.025	<0.025	<0.025
1,3-DICHLOROBENZENE	MG/KG	<0.025	<0.025	<0.025
1,4-DICHLOROBENZENE	MG/KG	<0.025	<0.025	<0.025
1,1-DICHLOROETHANE	MG/KG	<0.010	<0.010	<0.010
1,2-DICHLOROETHANE (EDC)	MG/KG	<0.010	<0.010	<0.010
1,1-DICHLOROETHENE	MG/KG	<0.010	<0.010	<0.010
CIS-1,2-DICHLOROETHENE	MG/KG	<0.010	<0.010	<0.010
TRANS-1,2-DICHLOROETHENE	MG/KG	<0.010	<0.010	<0.010
1,2-DICHLOROPROPANE	MG/KG	<0.010	<0.010	<0.010
CIS-1,3-DICHLOROPROPENE	MG/KG	<0.010	<0.010	<0.010
TRANS-1,3-DICHLOROPROPENE	MG/KG	<0.010	<0.010	<0.010
ETHYLBENZENE	MG/KG	<0.025	<0.025	<0.025
METHYLENE CHLORIDE	MG/KG	<0.50	<0.50	<0.50
1,1,2,2-TETRACHLOROETHANE	MG/KG	<0.010	<0.010	<0.010
TETRACHLOROETHENE	MG/KG	0.042	0.036	<0.025
TOLUENE	MG/KG	<0.025	<0.025	<0.025
1,1,1-TRICHLOROETHANE	MG/KG	<0.050	<0.050	<0.050
1,1,2-TRICHLOROETHANE	MG/KG	<0.010	<0.010	<0.010
TRICHLOROETHENE	MG/KG	<0.010	<0.010	<0.010
TRICHLOROFLUOROMETHANE	MG/KG	<0.010	<0.010	<0.010
VINYL CHLORIDE	MG/KG	<0.025	<0.025	<0.025
TOTAL XYLENES	MG/KG	<0.025	<0.025	<0.025
SURROGATES:				
BROMOCHLOROMETHANE (%)		85	88	75
TRIFLUOROTOLUENE (%)		114	116	109

Analytical Technologies, Inc.

GAS CHROMATOGRAPHY RESULTS

TEST : PURGEABLE HALOCARBONS/AROMATICS (EPA 8010/8020)
CLIENT : PUBLIC SERVICE COMPANY OF NM ATI I.D.: 407421
PROJECT # : (NONE)
PROJECT NAME : PERSON STATION

SAMPLE ID. #	CLIENT I.D.	MATRIX	DATE SAMPLED	DATE EXTRACTED	DATE ANALYZED	DIL. FACTOR
04	VEW-129	NON-AQ	07/29/94	07/29/94	08/12/94	1
05	VEW-134	NON-AQ	07/29/94	07/29/94	08/12/94	1
06	TRIP BLANK	NON-AQ	07/27/94	07/27/94	08/12/94	1

PARAMETER	UNITS	04	05	06
BENZENE	MG/KG	<0.025	<0.025	<0.025
BROMODICHLOROMETHANE	MG/KG	<0.010	<0.010	<0.010
BROMOFORM	MG/KG	<0.010	<0.010	<0.010
BROMOMETHANE	MG/KG	<0.030	<0.030	<0.030
CARBON TETRACHLORIDE	MG/KG	<0.010	<0.010	<0.010
CHLOROBENZENE	MG/KG	<0.025	<0.025	<0.025
CHLOROETHANE	MG/KG	<0.025	<0.025	<0.025
CHLOROFORM	MG/KG	<0.060	<0.060	<0.060
CHLOROMETHANE	MG/KG	<0.025	<0.025	<0.025
DIBROMOCHLOROMETHANE	MG/KG	<0.010	<0.010	<0.010
1,2-DIBROMOETHANE (EDB)	MG/KG	<0.010	<0.010	<0.010
1,2-DICHLOROBENZENE	MG/KG	<0.025	<0.025	<0.025
1,3-DICHLOROBENZENE	MG/KG	<0.025	<0.025	<0.025
1,4-DICHLOROBENZENE	MG/KG	<0.025	<0.025	<0.025
1,1-DICHLOROETHANE	MG/KG	<0.010	<0.010	<0.010
1,2-DICHLOROETHANE (EDC)	MG/KG	<0.010	<0.010	<0.010
1,1-DICHLOROETHENE	MG/KG	<0.010	<0.010	<0.010
CIS-1,2-DICHLOROETHENE	MG/KG	<0.010	<0.010	<0.010
TRANS-1,2-DICHLOROETHENE	MG/KG	<0.010	<0.010	<0.010
1,2-DICHLOROPROPANE	MG/KG	<0.010	<0.010	<0.010
CIS-1,3-DICHLOROPROPENE	MG/KG	<0.010	<0.010	<0.010
TRANS-1,3-DICHLOROPROPENE	MG/KG	<0.010	<0.010	<0.010
ETHYLBENZENE	MG/KG	<0.025	<0.025	<0.025
METHYLENE CHLORIDE	MG/KG	<0.50	<0.50	<0.50
1,1,2,2-TETRACHLOROETHANE	MG/KG	<0.010	<0.010	<0.010
TETRACHLOROETHENE	MG/KG	0.11	0.049	<0.025
TOLUENE	MG/KG	<0.025	<0.025	<0.025
1,1,1-TRICHLOROETHANE	MG/KG	<0.050	<0.050	<0.050
1,1,2-TRICHLOROETHANE	MG/KG	<0.010	<0.010	<0.010
TRICHLOROETHENE	MG/KG	<0.010	<0.010	<0.010
TRICHLOROFLUOROMETHANE	MG/KG	<0.010	<0.010	<0.010
VINYL CHLORIDE	MG/KG	<0.025	<0.025	<0.025
TOTAL XYLENES	MG/KG	<0.025	<0.025	<0.025
SURROGATES:				
BROMOCHLOROMETHANE (%)		72	72	90
TRIFLUOROTOLUENE (%)		109	109	107

Analytical Technologies, Inc.

GAS CHROMATOGRAPHY RESULTS - QUALITY CONTROL

REAGENT BLANK

TEST	: EPA 8010/8020	ATI I.D.	: 407421
BLANK I.D.	: 081194B	MATRIX	: NON-AQ
CLIENT	: PUBLIC SERVICE COMPANY OF NM	DATE EXTRACTED	: NA
PROJECT #	: (NONE)	DATE ANALYZED	: 08/11/94
PROJECT NAME	: PERSON STATION	DIL. FACTOR	: 1

PARAMETER	UNITS	
BENZENE	MG/KG	<0.025
BROMODICHLOROMETHANE	MG/KG	<0.010
BROMOFORM	MG/KG	<0.010
BROMOMETHANE	MG/KG	<0.030
CARBON TETRACHLORIDE	MG/KG	<0.010
CHLOROBENZENE	MG/KG	<0.025
CHLOROETHANE	MG/KG	<0.025
CHLOROFORM	MG/KG	<0.060
CHLOROMETHANE	MG/KG	<0.025
DIBROMOCHLOROMETHANE	MG/KG	<0.010
1,2-DIBROMOETHANE (EDB)	MG/KG	<0.010
1,2-DICHLOROBENZENE	MG/KG	<0.025
1,3-DICHLOROBENZENE	MG/KG	<0.025
1,4-DICHLOROBENZENE	MG/KG	<0.025
1,1-DICHLOROETHANE	MG/KG	<0.010
1,2-DICHLOROETHANE (EDC)	MG/KG	<0.010
1,1-DICHLOROETHENE	MG/KG	<0.010
CIS-1,2-DICHLOROETHENE	MG/KG	<0.010
TRANS-1,2-DICHLOROETHENE	MG/KG	<0.010
1,2-DICHLOROPROPANE	MG/KG	<0.010
CIS-1,3-DICHLOROPROPENE	MG/KG	<0.010
TRANS-1,3-DICHLOROPROPENE	MG/KG	<0.010
ETHYLBENZENE	MG/KG	<0.025
METHYLENE CHLORIDE	MG/KG	<0.50
1,1,2,2-TETRACHLOROETHANE	MG/KG	<0.010
TETRACHLOROETHENE	MG/KG	<0.025
TOLUENE	MG/KG	<0.025
1,1,1-TRICHLOROETHANE	MG/KG	<0.050
1,1,2-TRICHLOROETHANE	MG/KG	<0.010
TRICHLOROETHENE	MG/KG	<0.010
TRICHLOROFLUOROMETHANE	MG/KG	<0.010
VINYL CHLORIDE	MG/KG	<0.025
TOTAL XYLENES	MG/KG	<0.025
SURROGATES:		
BROMOCHLOROMETHANE (%)		77
TRIFLUOROTOLUENE (%)		106

Analytical Technologies, Inc.

GAS CHROMATOGRAPHY RESULTS - QUALITY CONTROL

REAGENT BLANK

TEST	: EPA 8010/8020	ATI I.D.	: 407421
BLANK I.D.	: 081294	MATRIX	: NON-AQ
CLIENT	: PUBLIC SERVICE COMPANY OF NM	DATE EXTRACTED	: NA
PROJECT #	: (NONE)	DATE ANALYZED	: 08/12/94
PROJECT NAME	: PERSON STATION	DIL. FACTOR	: 1

PARAMETER	UNITS	
BENZENE	MG/KG	<0.025
BROMODICHLOROMETHANE	MG/KG	<0.010
BROMOFORM	MG/KG	<0.010
BROMOMETHANE	MG/KG	<0.030
CARBON TETRACHLORIDE	MG/KG	<0.010
CHLOROBENZENE	MG/KG	<0.025
CHLOROETHANE	MG/KG	<0.025
CHLOROFORM	MG/KG	<0.010
CHLOROMETHANE	MG/KG	<0.025
DIBROMOCHLOROMETHANE	MG/KG	<0.010
1,2-DIBROMOETHANE (EDB)	MG/KG	<0.010
1,2-DICHLOROBENZENE	MG/KG	<0.025
1,3-DICHLOROBENZENE	MG/KG	<0.025
1,4-DICHLOROBENZENE	MG/KG	<0.025
1,1-DICHLOROETHANE	MG/KG	<0.010
1,2-DICHLOROETHANE (EDC)	MG/KG	<0.010
1,1-DICHLOROETHENE	MG/KG	<0.010
CIS-1,2-DICHLOROETHENE	MG/KG	<0.010
TRANS-1,2-DICHLOROETHENE	MG/KG	<0.010
1,2-DICHLOROPROPANE	MG/KG	<0.010
CIS-1,3-DICHLOROPROPENE	MG/KG	<0.010
TRANS-1,3-DICHLOROPROPENE	MG/KG	<0.010
ETHYLBENZENE	MG/KG	<0.025
METHYLENE CHLORIDE	MG/KG	<0.50
1,1,2,2-TETRACHLOROETHANE	MG/KG	<0.010
TETRACHLOROETHENE	MG/KG	<0.025
TOLUENE	MG/KG	<0.025
1,1,1-TRICHLOROETHANE	MG/KG	<0.050
1,1,2-TRICHLOROETHANE	MG/KG	<0.010
TRICHLOROETHENE	MG/KG	<0.010
TRICHLOROFLUOROMETHANE	MG/KG	<0.010
VINYL CHLORIDE	MG/KG	<0.025
TOTAL XYLENES	MG/KG	<0.025
SURROGATES:		
BROMOCHLOROMETHANE (%)		90
TRIFLUOROTOLUENE (%)		111

Analytical Technologies, Inc.

GAS CHROMATOGRAPHY - QUALITY CONTROL

MSMSD

TEST	: PURGEABLE HALOCARBONS/AROMATICS (EPA 8010/8020)		
MSMSD #	: 40742105	ATI I.D.	: 407421
CLIENT	: PUBLIC SERVICE COMPANY OF NM	DATE EXTRACTED	: 07/29/94
PROJECT #	: (NONE)	DATE ANALYZED	: 08/12/94
PROJECT NAME	: PERSON STATION	SAMPLE MATRIX	: NON-AQ
REF. I.D.	: 40742105	UNITS	: MG/KG

PARAMETER	SAMPLE RESULT	CONC SPIKE	SPIKED SAMPLE	% REC	DUP SPIKE	DUP % REC	RPD
BENZENE	<0.025	0.5	0.58	116	0.59	118	2
CHLOROBENZENE	<0.025	0.5	0.57	114	0.57	114	0
1,1-DICHLOROETHENE	<0.010	0.5	0.49	98	0.52	104	6
TOLUENE	<0.025	0.5	0.60	120	0.61	122	2
TRICHLOROETHENE	<0.010	0.5	0.58	116	0.62	124	7

$$\% \text{ Recovery} = \frac{(\text{Spike Sample Result} - \text{Sample Result})}{\text{Spike Concentration}} \times 100$$

$$\text{RPD (Relative Percent Difference)} = \frac{(\text{Sample Result} - \text{Duplicate Result})}{\text{Average Result}} \times 100$$

Analytical**Technologies,**Inc., Albuquerque, NM
San Diego • Phoenix • Seattle • Pensacola • Ft. Collins • Portland • Albuquerque

CHAIN OF CUSTODY

DATE: 7/29/94 PAGE 1 OF 1

ATI LAB I.D. 407421

PLEASE FILL THIS FORM IN COMPLETELY. SHADED AREAS ARE FOR LAB USE ONLY.

PROJECT MANAGER: Ron Johnson

COMPANY: P.N.M.
ADDRESS: Alvarado Square -0408
Albuquerque, NM 87158
PHONE: (505) 848-2998
FAX: (505) 848-2340

BILL TO:
COMPANY: SAME
ADDRESS:
Attn: Ron Johnson

SAMPLE ID	DATE	TIME	MATRIX	LAB ID
VEW-114	7/29/94	0806	S	01
VEW-119	7/29/94	0844		02
VEW-124		0911		03
VEW-129		0930		04
VEW-134	↓	0948	↓	05
Trip Blank	07/27/94	3301H	MeOH	06

ANALYSIS REQUEST

Petroleum Hydrocarbons (418.1)	(MOD 8015) Gas/Diesel	Diesel/Gasoline/BTXE/MTBE (MOD 8015/8020)	BTXE/MTBE (8020)	Chlorinated Hydrocarbons (601/8010)	Aromatic Hydrocarbons (602/8020)	SDWA Volatiles (502.1/503.1), 502.2 Reg. & Unreg.	Pesticides/PCB (608/8080)	Herbicides (615/8150)	Base/Neutral/Acid Compounds GC/MS (625/8270)	Volatile Organics GC/MS (624/8240)	Polynuclear Aromatics (610/8310)	SDWA Primary Standards - Arizona	SDWA Secondary Standards - Arizona	SDWA Primary Standards - Federal	SDWA Secondary Standards - Federal	The 13 Priority Pollutant Metals	RCRA Metals by Total Digestion	RCRA Metals by TCLP (1311)	NUMBER OF CONTAINERS
				X	X														1
				X	X														1
				X	X														1
				X	X														1
				X	X														1
				X	X														1

PROJECT INFORMATION

PROJ. NO.:
PROJ. NAME: Pesson Station
P.O. NO.:
SHIPPED VIA:

SAMPLE RECEIPT

NO. CONTAINERS: 11
CUSTODY SEALS: Y / N / (NA)
RECEIVED INTACT: Y
RECEIVED COLD: Y

PRIOR AUTHORIZATION IS REQUIRED FOR RUSH PROJECTS

(RUSH) ☐ 24hr ☐ 48hr ☐ 72hr ☐ 1 WEEK (NORMAL) ☒ 2 WEEK

Comments:
Matrix: Soil in methanol
Yes: Data Disk C.S. on the cooler

SAMPLED & RELINQUISHED BY: 1.
Signature: Time: 1015
Printed Name: Ron Johnson Date: 7/29/94
Company: PNM Phone: 848-2998

RELINQUISHED BY: 2.
Signature: Time:
Printed Name: Date:
Company:

RELINQUISHED BY: 3.
Signature: Time:
Printed Name: Date:
Company:

RECEIVED BY: 1.
Signature: Time:
Printed Name: Date:
Company:

RECEIVED BY: 2.
Signature: Time:
Printed Name: Date:
Company:

RECEIVED BY:(LAB) 3.
Signature: Time: 10:15
Printed Name: Dianne Cutler Date: 7/29/94
Analytical Technologies, Inc.

DISTRIBUTION: White, Canary - ATI • Pink - ORIGINATOR

APPENDIX F

SITE MAP