Summary of Installation, Operation, and Effectiveness of Soil Vapor Extraction System Person Generating Station Albuquerque, New Mexico

RCRA Permit: NMT 360010342

Prepared for

Public Service Company of New Mexico

October 1996

PARSONS
PARSONS ENGINEERING SCIENCE, INC.
1700 Broadway, Suite 900 • Denver, Colorado 80290

TABLE OF CONTENTS

Page

SECTION 1 - INTRODUCTION 1-1

SECTION 2 - PHASE I SVE STARTUP AND PILOT TESTS 2-1

2.1 Purpose 2-1
2.2 Selection Of Test Site 2-1
2.3 RCRA Permit Modification 2-1
2.4 SVE System Design 2-3
2.4.1 Extraction Well Design 2-3
2.4.2 Pressure Monitoring Wells 2-3
2.4.3 Vacuum Blower, Piping, and Instrumentation 2-3
2.4.3.1 Vacuum Blower 2-8
2.4.3.2 Piping and Instrumentation 2-8
2.4.3.3 Treatment of Extracted Vapor 2-9
2.5 Phase I SVE Pilot Test Results 2-9
2.5.1 Soil Gas Permeability 2-10
2.5.2 Soil Gas VOC Monitoring 2-10
2.5.3 Radius of Influence 2-14
2.5.4 Laboratory VOC Analytical Results 2-14
2.5.5 VOC Removal Rates 2-14
2.6 Phase I SVE System Effectiveness 2-14

SECTION 3 - EXTENDED PHASE I OPERATIONS AND SVE SYSTEM EFFECTIVENESS 3-1

3.1 Extended SVE Phase I Piloting Testing 3-1
3.1.1 Review of System Performance 3-1
3.1.2 Estimation of Residual Soil Contamination 3-3
3.1.3 Basis to Not Complete Further SVE Operations 3-5

SECTION 4 - REFERENCES 4-1

ATTACHMENT 1 - Soil Analytical Results
ATTACHMENT 2 - SVE System Operations and Maintenance Manual
ATTACHMENT 3 - SVE and Air Stripper Air Discharge Permit
ATTACHMENT 4 - Phase I SVE Soil Gas Analytical Results
ATTACHMENT 5 - Phase I SVE Pilot Test Emission Calculations
ATTACHMENT 6 - Calculations of Residual Soil Concentrations Using Equilibrium Relationship

TABLE OF CONTENTS (CONTINUED)

LIST OF TABLES

No.	Title	Page
2.1	Field Screening Results for Total VOCs	2-11
2.2	Summary of Laboratory Analytical Results	2-13
2.3	Vacuum Radius of Influence at 100 scfm	2-16
2.4	Total VOCs Removed During Startup Test	2-17
2.5	Volatile Organics in Extracted Soil Gas (120 scfm)	2-19
3.1	Estimated Residual Soil Concentrations (September 1996)	3-6
3.2	Comparison of Estimated Residual Soil Concentrations to Proposed Cleanup Goals	3-8

LIST OF FIGURES

No.	Title	Page
1.1	General Site Location	1-2
2.1	Location of Vapor Extraction Pilot Test	2-2
2.2	Vapor Exraction/Dewatering Well Detail	2-4
2.3	VEW/DW Well Head Detail	2-5
2.4	Soil Gas Monitoring Points	2-6
2.5	SVE Process Flow and Instrumentation Diagram	2-7
2.6	Vacuum Influence Test at 100 scfm	2-15
3.1	Concentration of PCE in SVE Influent	3-2
3.2	Cumulative Mass of Volatile Organic Contaminatnts Removed by SVE System	3-4

SECTION 1

INTRODUCTION

This soil vapor extraction (SVE) summary report was prepared for Public Service Company of New Mexico (PNM) by Parsons Engineering Science, Inc. (Parsons ES) in support of the Resource Conservation and Recovery Act (RCRA) permit reapplication process for the Person Generating Station site (Figure 1.1) The purpose of this report is to summarize activities associated with installation, pilot testing, and extended operation of the SVE system and present results which demonstrate the effectiveness of the system at removing residual contaminant mass from vadose zone soils.

A description of the background information and site history of the Person Generating Station site is provided in the Corrective Measures Proposal (CMP) for the Person Generating Station (Parsons ES, formerly Engineering-Science, Inc. [ES], 1994a). The CMP documented the screening of remedial technologies and the development of a remedial approach appropriate for removing volatile organic compounds (VOCs) in vadose zone soils and shallow groundwater. The recommended remedial approach made use of SVE for the removal of VOCs from source area soils. A two-phased approach was recommended that included an initial phase of pilot testing and optimization (Phase I) followed by final design and full-scale remediation based on the pilot testing (Phase II).

The CMP recommended the following approach and conceptual design for the Phase I SVE treatment system:

- Obtain a RCRA permit modification to construct a well through the RCRA cap;
- Construct a single 4-inch, polyvinyl chloride (PVC), dual-purpose vapor extraction well/dewatering well (VEW/DW) through the cap with a screened interval from 10 feet below ground surface (bgs) to approximately 145 feet bgs;
- Install carbon canisters to remove the initial high levels of VOC contamination from extracted vapors prior to discharge to the atmosphere;
- Connect a 10-horsepower (HP) test blower (a trailer-mounted system owned by Parsons ES) to the VEW and extract soil gas at a rate of approximately 100 standard cubic feet per minute (scfm) for Phase I testing;
- Conduct a 60- to 70-day SVE test in the source area near the former waste oil vessel;
- Model the impact of VOCs on the ambient air quality; and
- Obtain an air discharge permit.

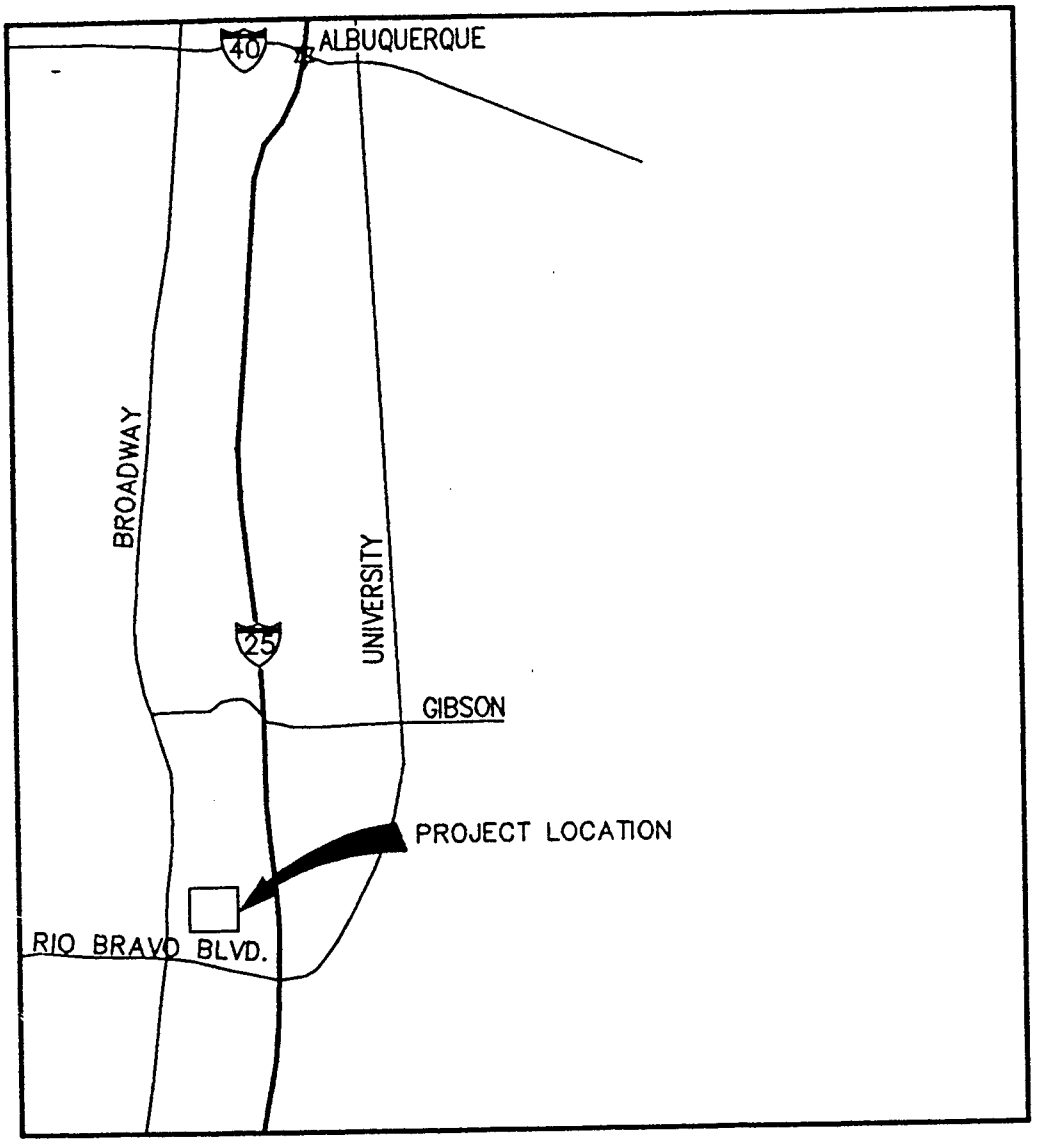

NOT TO SCALE

FIGURE 1.1

GENERAL SITE LOCATION

PERSON GENERATING STATION
BERNALILLO COUNTY, NM

ENGINEERING-SCIENCE, INC.
Denver, Colorado

Following an initial 57-day pilot test (see Section 2), the SVE system was shutdown for approximately 240 days during air permitting negotiations. SVE system operation began again in August 1995 and continued for 103 days as part of the extended Phase I period of operation. The SVE system was shutdown again in November 1995 to avoid operational problems caused by condensation resulting from vapor extraction in cold weather. After 111 days, the SVE system was restarted in March 1996 and operated another 187 days (until September 1996). Analytical soil gas data collected following extended operation suggest that residual soil VOC concentrations have been significantly reduced below the preliminary remediation goals (PRGs) specified in a risk assessment performed by ES (1994b) for PNM. These soil gas data also indicate that residual soil concentrations are significantly less than U.S. Environmental Protection Agency (EPA) (1996) soil screening levels (SSLs). Based on this information, PNM is pursuing reapplication for the RCRA post-closure care permit, which will include documentation that the soils at the Person Generating Station site have been reliably decontaminated (see Section 3).

This document is composed of 4 sections, including this introduction, and 6 attachments. Section 2 presents SVE system design details and results from the 57-day pilot test. Section 3 presents information on extended Phase I operations and system effectiveness. References are provided in Section 4. Soil analytical results, the SVE system operations and maintenance manual, the air discharge permit, Phase I soil gas analytical results, Phase I SVE emission calculations, and related system effectiveness estimates are provided in Attachments 1 through 6, respectively.

SECTION 2

PHASE I SVE STARTUP AND PILOT TESTS

2.1 PURPOSE

The SVE startup test was conducted as a soils treatability study as part of Phase I of the recommended remedial approach. Due to the favorable soil conditions (primarily fine to coarse sands) and the volatile nature of the contaminants that were originally present, SVE was selected as the remedial technology to be applied to achieve soil remediation at the Person Generating Station site.

The purpose of the startup test was to collect sufficient data to optimize operation of the SVE system located near the former waste oil vessel. The basic theory of SVE is to apply a negative pressure, or vacuum, to the subsurface to create a pressure gradient. This gradient produces advective air flow, which will remove vapor-phase compounds and also promote continued volatilization of organic compounds from the soil into the soil pore spaces. The vacuum is created by using blowers or vacuum pumps, and is applied to the subsurface via vent wells. Specific objectives of the SVE startup test were to determine:

- Radius of influence of the extraction well;
- Soil vapor concentrations before, during, and after the test; and
- The need for granular activated carbon canisters during Phase II, if any.

2.2 SELECTION OF TEST SITE

The SVE startup test was conducted in the soil contamination source area directly beneath the former waste oil vessel (Figure 2.1). Previous site assessments had documented high contaminant concentrations (delineated by soil concentrations of 1 part per million (ppm) tetrachloroethylene [PCE] or greater) extending approximately 70 feet bgs in an area approximately 30 feet in diameter. By placing the VEW/DW near the center of this source area, maximum recovery of volatile contaminants could be expected. The special surface completion of this well ensured the integrity of the RCRA cap.

2.3 RCRA PERMIT MODIFICATION

The RCRA permit for the Person Generating Station did not allow disturbance of the RCRA closure cap. In October 1993, PNM applied for a RCRA permit modification to allow construction of the VEW/DW well through the closure cap. The permit

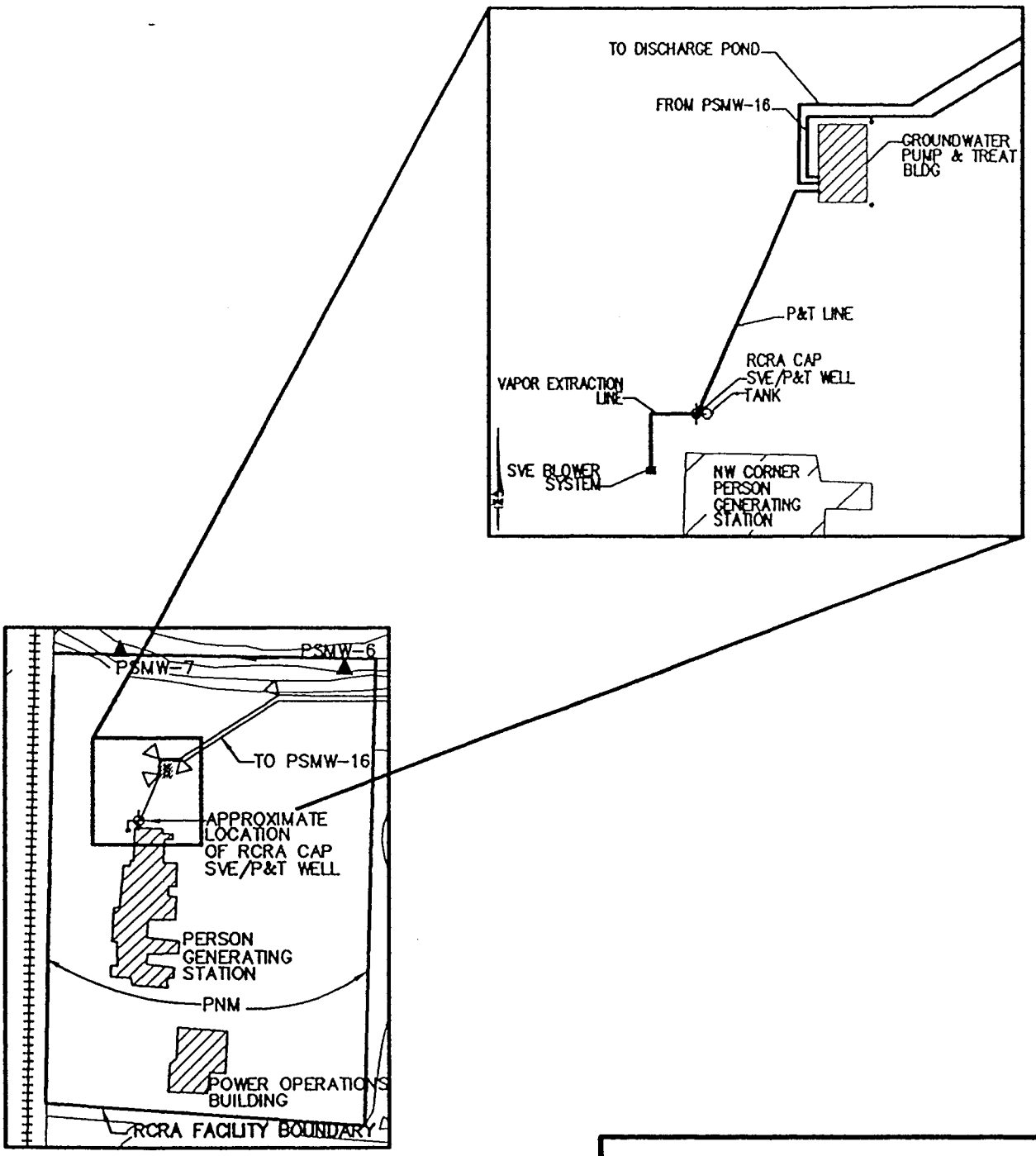

FIGURE 2.1

LOCATION OF VAPOR EXTRACTION PILOT TEST PERSON GENERATING SITE

New Mexico Public Service
Albuquerque, New Mexico

ENGINEERING-SCIENCE, INC.

Denver, Colorado

94DN0845, 08/03/94 at 10:52

modification was public noticed March 18, 1994. A RCRA permit modification was approved on June 3, 1994 by the New Mexico Environment Department (NMED) to allow construction of the VEW/DW well through the existing RCRA cap.

2.4 SVE SYSTEM DESIGN

2.4.1 Extraction Well Design

The extraction well was used as a vapor extraction well and a dewatering well for groundwater recovery during the Phase I groundwater pumping test. Therefore, the well was designed for a dual purpose and had two types of well screen and sand pack. Figures 2.2 and 2.3 show the VEW/DW well and well head completion details, respectively.

The borehole for the VEW/DW was advanced to approximately 140 feet by an 11-inch-outside-diameter, continuous-flight, hollow-stem auger with continuous split-spoon sampling. Soil analytical results from the VEW/DW boring are provided in Attachment 1. The VEW/DW was constructed of 4-inch-diameter, Schedule 40 threaded-and-coupled PVC. The lower portion of the VEW/DW was screened below the water table with a minimum of 15 feet of 0.020-inch factory-slotted PVC screen. This portion of the well annulus was sand-packed with 10-20 silica sand from the bottom of the borehole to approximately 1 foot above the top of the 20-slot screen.

The upper portion of the VEW/DW was screened in the vadose zone with 110 or 115 feet of 0.040-inch factory-slotted PVC screen. The remaining well annulus was sand-packed with 6-9 grain-size silica sand from the top of the 10-20 grain-size silica sand to approximately 1 foot above the top of the screen. The open area in the screen and the grain size of the sand pack were chosen to maximize air flow into the well.

2.4.2 Pressure Monitoring Wells

Existing groundwater monitoring wells were used as pressure monitoring wells to evaluate pressure response to the applied vacuum from the VEW/DW. Existing monitoring wells PSMW-1, PSWM-2, and PSWM-3 are located approximately 55, 43, and 27 feet from the vapor extraction well, respectively (Figure 2.4). These wells are screened above the water table and were used to verify that an adequate pressure gradient was achieved in deeper soils throughout the contaminated radius. In addition, soil gas probe points SG1 (5 feet deep) and SG2 (14 feet deep) also were used for pressure monitoring in shallow soils. SG1 and SG2 are located approximately 19 and 54 feet from VEW/DW, respectively (Figure 2.4).

2.4.3 Vacuum Blower, Piping, and Instrumentation

The SVE system is diagrammed in Figure 2.5. The system consists of a skid-mounted vacuum blower, a knock-out pot, an air filter, flow control and air bleed valves, pressure and temperature gauges, a flow indicator, and air sampling points.

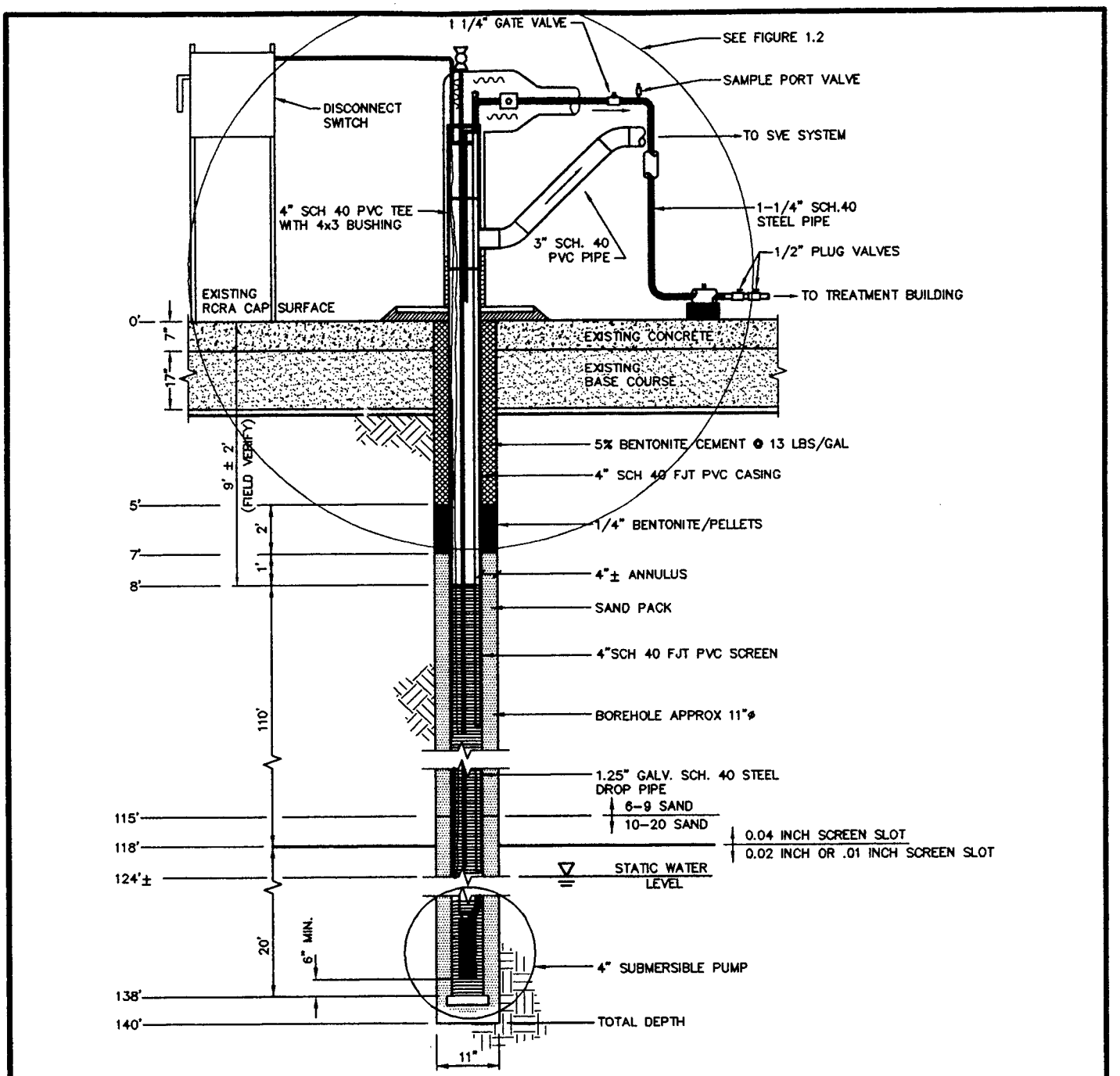

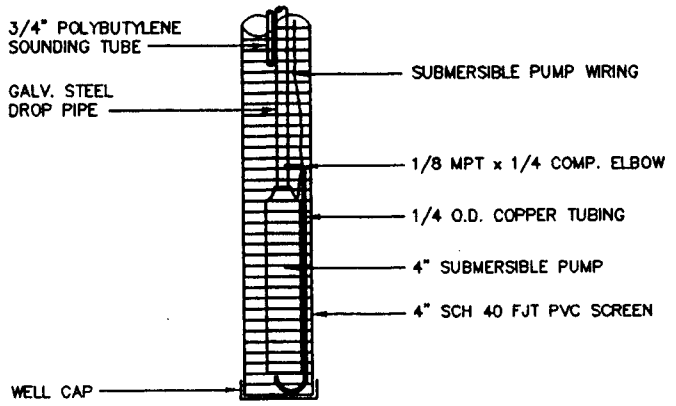

4" SUBMERSIBLE PUMP DETAIL

FIGURE 2.2

VAPOR EXTRACTION/ DEWATERING WELL (VEW/DW) DETAIL

Person Station
Bernalillo County, New Mexico

PARSONS ENGINEERING SCIENCE, INC.
Denver, Colorado

K:\PNM\722445\96DN0924, 02/20/97 at 13:17

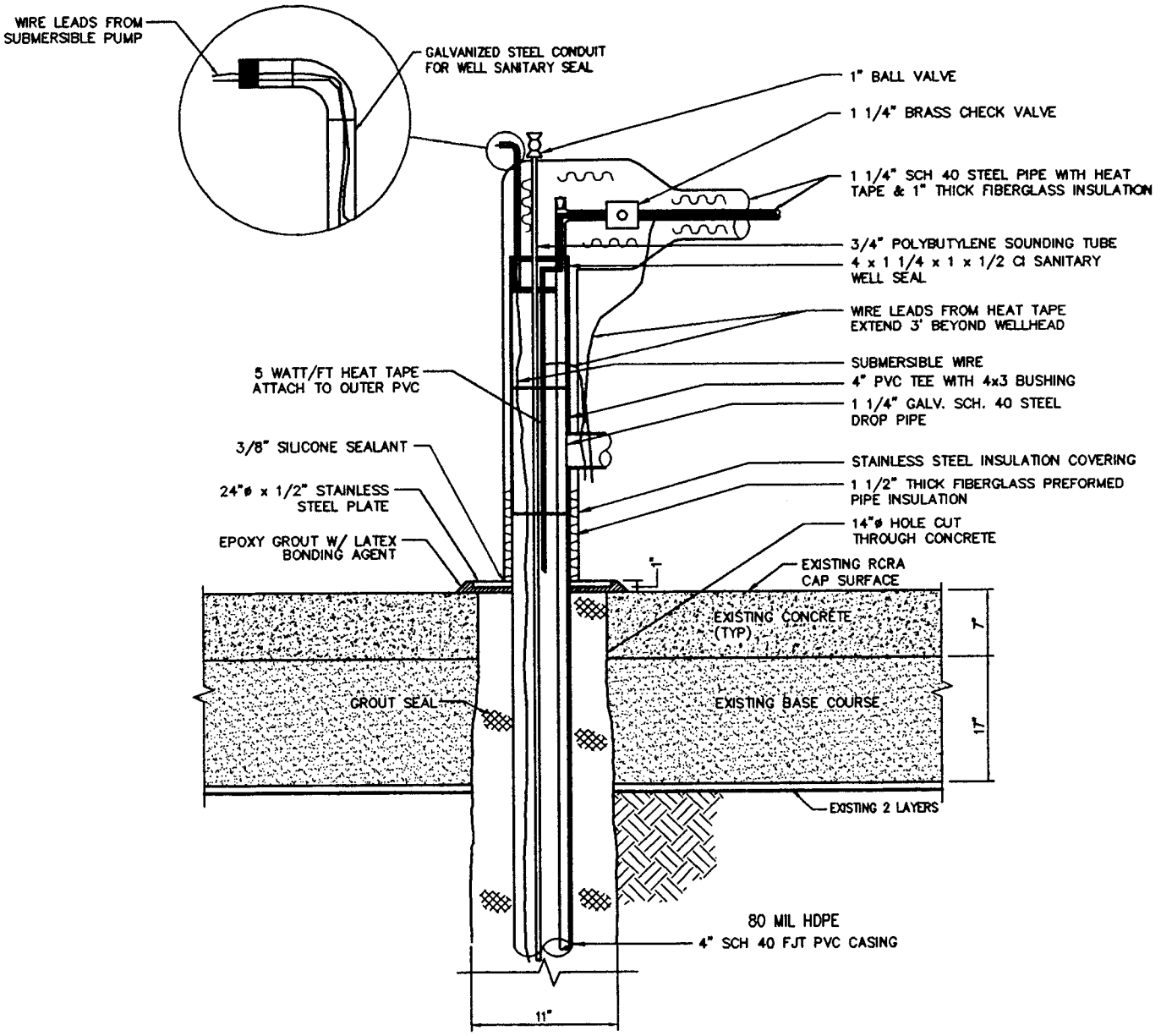

FIGURE 2.3

VEW/DW WELL HEAD DETAIL

Person Station
Bernalillo County, New Mexico

PARSONS ENGINEERING SCIENCE, INC.
Denver, Colorado

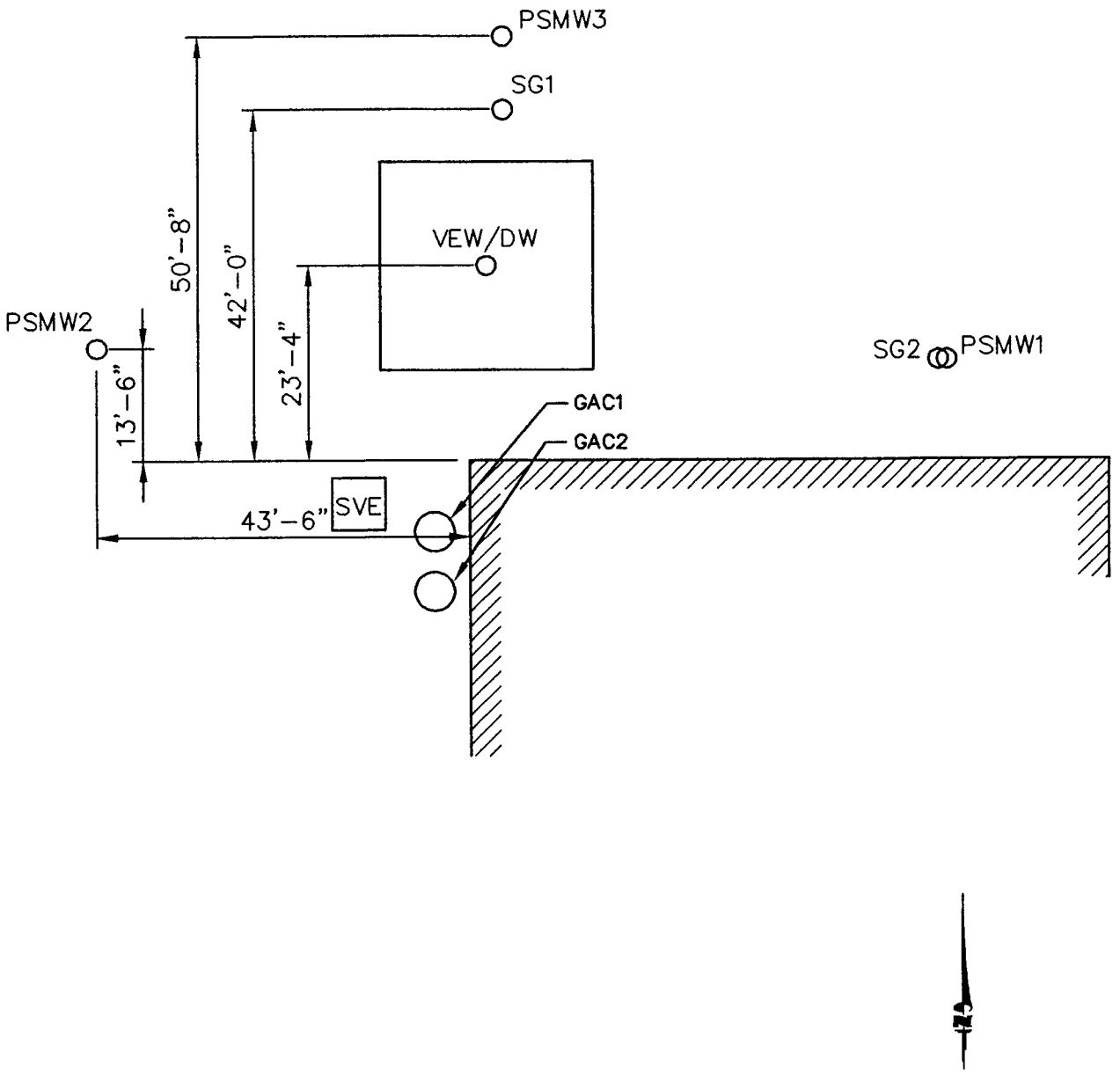

LEGEND

VEW/DW ○ VAPOR EXTRACTION/DEWATERING WELL

SG2 ○ SOIL GAS PROBE

PSMW1 ○ PUBLIC SERVICE MONITORING WELL

BUILDING

GAC1 GRANULATED ACTIVATED CARBON

SVE SVE BLOWER

FIGURE 2.4

SOIL GAS MONITORING POINTS SVE SYSTEM

Public Service Company of New Mexico
Person Generating Station
Alberquerque, New Mexico

ENGINEERING-SCIENCE, INC.

Denver, Colorado

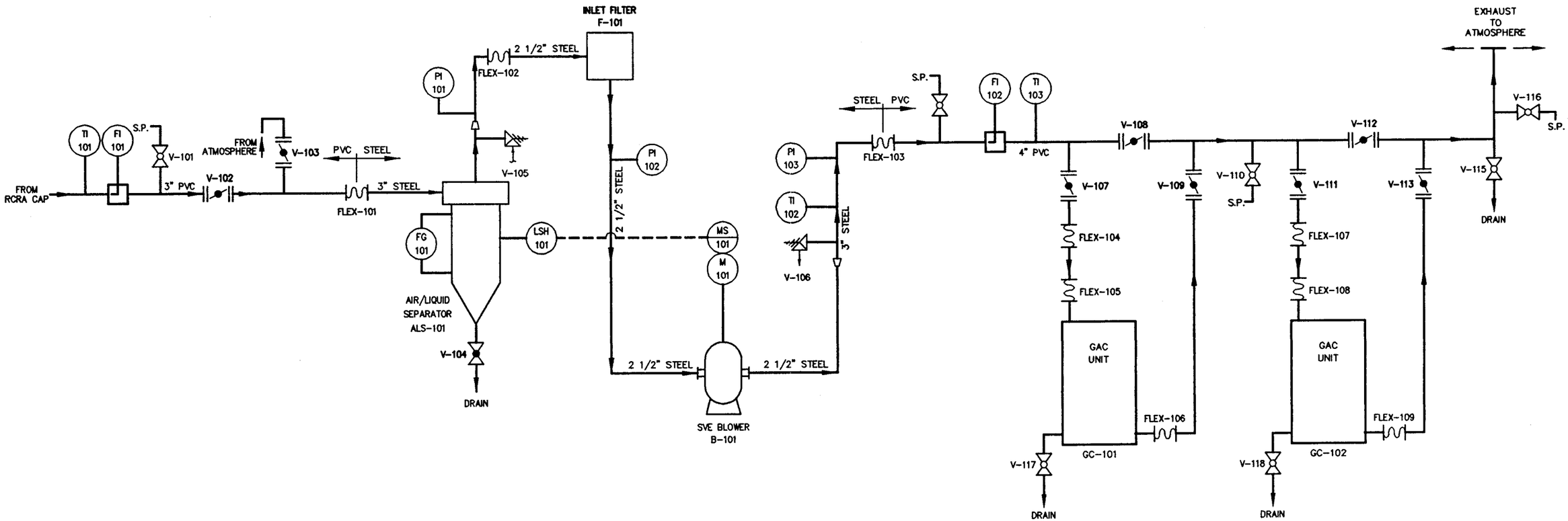

P&ID AND MECHANICAL LEGEND

	FLEXIBLE COUPLING		REDUCER
	GLOBE VALVE		FLANGE
	BALL VALVE		ELECTRICAL SIGNAL
	BUTTERFLY VALVE	LSH XXX	LIQUID LEVEL SWITCH-HIGH
	PRESSURE RELIEF VALVE	PI XXX	PRESSURE/VACUUM INDICATOR
	VACUUM RELIEF VALVE	MS XXX	MOTOR STARTER
	PRIMARY FLOW DIRECTION	M XXX	MOTOR
	SVE BLOWER	FG XXX	FLUID SITE GAUGE
S.P.	SAMPLING PORT	TI XXX	TEMPERATURE INDICATOR
FI XXX	FLOW RATE INDICATOR		

FIGURE 2.5

SVE PROCESS FLOW AND INSTRUMENTATION DIAGRAM

Public Service Company of New Mexico
Person Generating Station
Albuquerque, New Mexico

PARSONS ENGINEERING SCIENCE, INC.
Denver, Colorado

Granulated activated carbon (GAC) has been used to treat the extracted vapor, and is discussed in subsequent sections.

2.4.3.1 Vacuum Blower

To create a vacuum in the subsurface, an EG&G Rotron® Model EN8 regenerative, direct-drive vacuum blower, was used to remove air from the VEW. The blower specifications and performance curves are provided in Attachment 2. The blower is capable of providing 100 to 400 scfm at 100 inches to 0 inches of water-column vacuum, respectively. While explosive concentrations of extracted vapors were not expected, the blower and motor installed during SVE startup is explosion-proof. The electric motor is 10 HP and is rated for continuous-duty service, full voltage starting, and is suitable for outdoor locations.

To minimize water and particulates in the blower system, especially when treating the recovered vapor, a knock-out pot (to remove condensables) and an air filter (to remove particulates) was installed in-line before the blower to protect the blower and to prevent fouling of the GAC vessels (Figure 2.5).

2.4.3.2 Piping and Instrumentation

The hard piping connecting the VEW to the knock-out pot consists of 4-inch Schedule 80 PVC pipe and fittings. Pressure, flow measurement, and temperature indicators were placed in this piping. A manual flow-control valve was installed to provide dilution air in the event VOC concentrations from the VEW were too high for the GAC vessel to adsorb during the test period.

The knock-out pot includes a drain, a level switch, and a level sight gauge. The knock-out pot has approximately 40 gallons of capacity. The sight level gauge provides for visual inspection, and the level switch provides for automatic shutdown if the unit becomes full. Large accumulations of water were not anticipated, although it was known that condensation would increase during colder winter months.

A particulate filter was placed in-line between the knock-out pot and the blower to protect the blower. Vacuum indicators were installed before and after the filter to measure the pressure differential across the filter. A vacuum relief valve also was provided between the air filter and the blower, in the event the air filter or knock-out pot became fouled, to prevent damage to the piping and blower.

A pressure relief valve, pressure indicator, temperature indicator, and a pilot tube with a differential-pressure indicator was installed between the blower outlet and the GAC vessel inlet.

Vapor sampling points were placed at the following locations:

- Between the well and the knock-out pot to monitor vapor concentrations from the VEW;

- Between the blower and the GAC vessel to monitor diluted vapor concentrations (if required); and

- After the GAC vessel to monitor the efficiency of the carbon filtration system.

2.4.3.3 Treatment of Extracted Vapor

An air discharge permit (Attachment 3) was acquired from the City of Albuquerque. The permit requirement for vapor treatment was determined by modeling the impact of discharged VOCs on ambient air quality. Based on modeling results, untreated VOC concentrations would have had a limited impact on air quality. The addition of vapor treatment further minimized the potential impact on air quality during the initial days of operation when the highest concentrations of VOCs were present in the extracted vapors. A maximum discharge of 0.75 pound per hour (lb/hour) of non-methane hydrocarbons was allowed under the permit. Individual compound emissions also were limited to 0.375 lb/hour of 1,1,1-trichloroethane (TCA), 0.375 lb/hour of PCE, and 0.003 lb/hour of 1,1-dichloroethylene (DCE).

A 1,000-pound GAC vessel was originally planned for treatment of the extracted vapors; however, an additional 1,800-pound carbon unit was added in series during initial Phase I operations to ensure air permit discharge limits were not exceeded.

2.5 PHASE I SVE PILOT TEST RESULTS

Startup and evaluation of the Phase I SVE system was conducted between August 22 and 25, 1994. Minor system adjustments were made based on startup results, and initial pilot testing was conducted between September 22 and November 17, 1994. Soil vapor was extracted from the VEW/DW, and existing groundwater monitoring wells and newly-installed soil gas probes were used to monitor soil gas vacuum response and VOC concentrations during SVE system evaluation.

The evaluation was conducted by applying a vacuum to the VEW/DW using the 10-HP SVE blower (Figure 2.5), while monitoring the subsurface pressure distribution at existing wells PSMW-1, PSMW-2, and PSMW-3, and at soil gas probe locations SG1 and SG2 (Figure 2.4). In addition, the removal of VOCs from the subsurface was monitored both before and after the GAC vessels using a direct-reading field instrument and laboratory analyses of collected air samples. Specific objectives of this initial pilot test were to :

- Determine VOC removal rates;

- Confirm that the entire soil volume was being treated;

- Evaluate the effectiveness of the GAC air treatment unit; and

- Determine soil permeability to air flow.

Laboratory analytical results and emission calculations from the pilot test are presented in Attachments 4 and 5, respectively.

2.5.1 Soil Gas Permeability

Two soil gas permeability tests were conducted to determine the radius of influence and to calculate the soil permeability under different flow rates. Test 1 involved extracting air from the VEW/DW for 70 minutes at a flow rate of approximately 240 scfm and an average vacuum of 42 inches of water. Test 2 was then conducted for 80 minutes at a rate of approximately 100 scfm and an average vacuum of 20 inches of water. Vacuum measurements associated with determination of soil gas permeability and radius of influence are discussed further in Section 2.5.3.

Following Test 2, minor system modifications were made and the system was started and operated continuously at a flow rate of approximately 240 scfm for the next 40 hours, when breakthrough was detected at the outlet of the GAC unit.

The vacuum response at each monitoring well and each soil gas probe was measured at approximately 5-minute intervals until steady-state conditions were achieved. Due to the relatively long time required to reach steady-state conditions, the dynamic method of determining soil gas permeability (Johnson *et al.*, 1990) was selected. An average soil permeability range of approximately 34 to 78 darcys, typical for permeable sandy soils, was calculated for this site.

2.5.2 Soil Gas VOC Monitoring

Throughout the 57-day initial SVE test, VOC concentrations in the soil gas extracted from the VEW/DW, monitoring wells, and soil gas probes were monitored using both direct-reading field instrument and laboratory analyses. Field screening results are presented in Table 2.1, and laboratory results are summarized in Table 2.2. A photoionization detector (PID) with both 10 and 11.8 electron-volt (eV) lamps and calibrated to a 100-part-per-million, volume per volume (ppmv) isobutylene standard was used to screen samples in the field. Air samples for laboratory VOC analysis were collected in 1-liter SUMMA® canisters and sent to Air Toxics, Ltd. in Folsom, California. These samples were analyzed using USEPA Method TO-14 (see Attachment 4).

Initial soil gas samples were collected from PSMW-3, SG1, and from the VEW/DW to determine the equilibrium VOC concentrations in the soil gas at the beginning of the Phase I pilot test. Samples for laboratory analysis were subsequently collected from the VEW/DW and from the GAC effluent at approximately 24-hour intervals until breakthrough of VOC was detected at the outlet of the GAC unit. Soil gas samples for field screening were collected from the monitoring wells, soil gas probes, and before and after the GAC unit at more frequent intervals, as presented in Table 2.1.

Soil gas VOC concentrations in samples collected from the monitoring wells and soil gas probes decreased with time during pilot-scale system operation. The concentrations of total VOCs in the soil gas samples from the VEW/DW exceeded the anticipated range (maximum of 2,000 ppmv) of the PID for most samples (Table 2.1).

TABLE 2.1
FIELD SCREENING RESULTS FOR TOTAL VOCS
PERSON GENERATING STATION
BERNALILLO COUNTY, NEW MEXICO

Location	Date	Time	PID (ppmv)	Comments
SP2 (before GAC)	8-23-94	11:25	> 2,000	lab sample VW-1
		14:10	700	bleed valve open
		15:56	> 2,000	
		17:03	> 2,000	
		18:44	1367	
	8-24-94	07:53	> 2,000	
		08:28	> 2,000	lab sample VW-2
		15:00	> 2,000	
	8-25-94	08:30	> 2,000	
		09:20	> 2,000	lab sample VW3
SP3 (after GAC)	8-23-94	11:27	< 1	lab sample GAC-1
		14:00	< 1	
		15:54	< 1	
		17:02	< 1	
		18:42	< 1	
	8-24-94	07:53	< 1	
		08:48	< 1	lab sample GAC-2
		15:00	< 1	
	8-25-94	08:30	517	breakthrough
		09:25	517	lab sample GAC-3
		09:30	512	lab sample GAC-3A
SG1 (soil gas probe - 5' depth)	8-23-94	07:48	113	
		08:46	126	
		14:21	181	lab sample SG1-1
		15:44	7.9	
		17:07	36.1	
		18:33	11.0	
	8-24-94	07:53	4.0	
		15:00	< 1	
	8-25-94	08:30	< 1	

TABLE 2.1 (CONTINUED)
FIELD SCREENING RESULTS FOR TOTAL VOCS
PERSON GENERATING STATION
BERNALILLO COUNTY, NEW MEXICO

Location	Date	Time	PID (ppmv)	Comments
SG2 (soil gas probe - 14' depth)	8-23-94	08:02	91	
		14:27	52	
		15:42	39.9	
		17:09	59.0	
		18:40	23.9	
	8-24-94	07:53	8.0	
		15:00	< 1	
	8-25-94	< 1	< 1	
PSMW1	8-23-94	07:56	20.0	
		14:25	190	
		15:38	71.8	
		17:10	151	
		18:35	123	
	8-24-94	07:53	61.2	
		15:00	76.9	
	8-25-94	08:30	22.7	
PSMW2	8-23-94	07:37	420	
		14:15	333	
		15:50	416	
		17:13	295	
		18:22	292	
	8-24-94	07:53	300-400	readings continued to fluxuate between these values
		15:00	172	
	8-25-94	08-30	170-300	see comment above
PSMW3	8-23-94	07:26	1292	
		08:40	904	lab sample PSMW3-1
		14:20	520	
		15:46	440	
		17:17	543	
		18:27	483	
	8-24-94	07:53	358	
		15:00	349	
	8-25-94	08:30	304	

TABLE 2.2
SUMMARY OF LABORATORY ANALYTICAL RESULTS
PERSON GENERATING STATION
BERNALILLO COUNTY, NEW MEXICO

Sample ID	Location	Date	Time	1,1-Dichloro-ethene (ppmv)	chloroform (ppmv)	1,1,1-Trichloro-ethane (ppmv)	Tri-chloro-ethene (ppmv)	Tetra-chloro-ethane (ppmv)	1,3,5-Trimetyl-benzene (ppmv)	1,2,4-Trimethyl-benzene (ppmv)
VW-1	before air treatment	8/23/94	11:25	27.00	ND	82.00	ND	1400.00	ND	7.30
GAC-1	after air treatment	8/23/94	11:27	ND	ND	ND	ND	0.084	ND	ND
PSNM3-1	monitoring well PSMW-3	8/23/94	08:40	66.00	ND	69.00	ND	570.00	ND	ND
SG1-1	soil gas probe SG1	8/23/94	08:46	1.80	ND	5.70	ND	100.00	ND	ND
VW-2	before air treatment	8/24/94	08:28	29.00	ND	41.00	ND	880.00	ND	ND
GAC-2	after air treatment	8/24/94	08:48	ND	ND	ND	ND	ND	ND	ND
VW-3	before air treatment	8/25/94	09:20	40.00	ND	45.00	ND	1100.00	3.00	5.40
GAC-3	after air treatment	8/25/94	09:25	60.00	1.20	120.00	1.60	340.00	ND	ND

2.5.3 Radius of Influence

The radius of influence of a VEW is the horizontal distance from the well to the outer limit of vacuum response. Results from the fall 1994 permeability tests indicated that the radius of influence at flow rates of both 100 and 240 scfm exceeded 60 feet at depths from 5 feet bgs to just above the water table surface at a depth of approximately 110 feet. Results of the vacuum influence test at 100 scfm are shown in Figure 2.6 and Table 2.3. Vacuum measurement locations with respect to the VEW/DW are shown on Figure 2.4. The more than 60-foot radius of influence was deemed adequate to remediate the entire contaminated soil volume beneath the RCRA cap.

2.5.4 Laboratory VOC Analytical Results

Laboratory results for all VOCs detected in soil gas samples collected during the startup and pilot tests are summarized in Table 2.2. Concentrations of VOCs in the extracted soil gas generally decreased with time.

2.5.5 VOC Removal Rates

A total of approximately 326 pounds of VOCs were removed during the 2-day startup period. Table 2.4 summarizes the VOC removal rates achieved during the initial days of Phase I operation. Total VOC removal rates generally decreased with time, from a maximum of approximately 9.10 lbs/hour after 1 hour of system operation, to 5.78 lbs/hour and 7.24 lbs/hour after 22 and 47 hours, respectively (Attachment 5). Breakthrough of VOCs from the single GAC unit used for this initial test occurred during the early morning hours of August 24, 1994. At 9:30 a.m., emissions of 0.2 lbs/hour 1,1-DCE, 0.6 lbs/hour 1,1,1-TCA, and 2.1 lbs/hour PCE were measured in the carbon unit effluent based on laboratory analysis (Attachment 4). As noted previously, to prevent another breakthrough, two carbon units were placed in series, and the influent to, and discharge from, the first GAC unit was monitored every 8 to 10 hours with a PID during the first week of the initial 57-day pilot test.

2.6 PHASE I SVE SYSTEM EFFECTIVENESS

The radius of vacuum influence of the Phase I SVE system exceeded 60 feet. Vacuum readings in excess of 2 inches of water were achieved at all soil vapor monitoring points. This included PSMW-1, which is located approximately 55 feet from the VEW/DW well and is screened within 10 feet of the water table. The Phase I 10-HP vacuum blower had both the flow and vacuum capacity required to remediate all impacted soils directly beneath the RCRA cap.

Based on laboratory analysis of extracted soil gas, approximately 1,300 lbs of VOCs were removed from the soil during the first 57 days of Phase I pilot testing. Throughout the 57-day testing period, the vacuum level at the SVE well head was approximately 25 inches of water using an extraction rate of 120 scfm.

With the onset of colder weather, significant soil moisture accumulated in the knock-out pot, which required draining approximately every 48 hours. Soil moisture also collected at the bottom of the two in-series GAC canisters, which required draining. Phase I SVE system operations were stopped in mid-November 1994 because of the

FIGURE 2.6
VACUUM INFLUENCE TEST AT 100 SCFM
23 August 1994
Person Generating Station

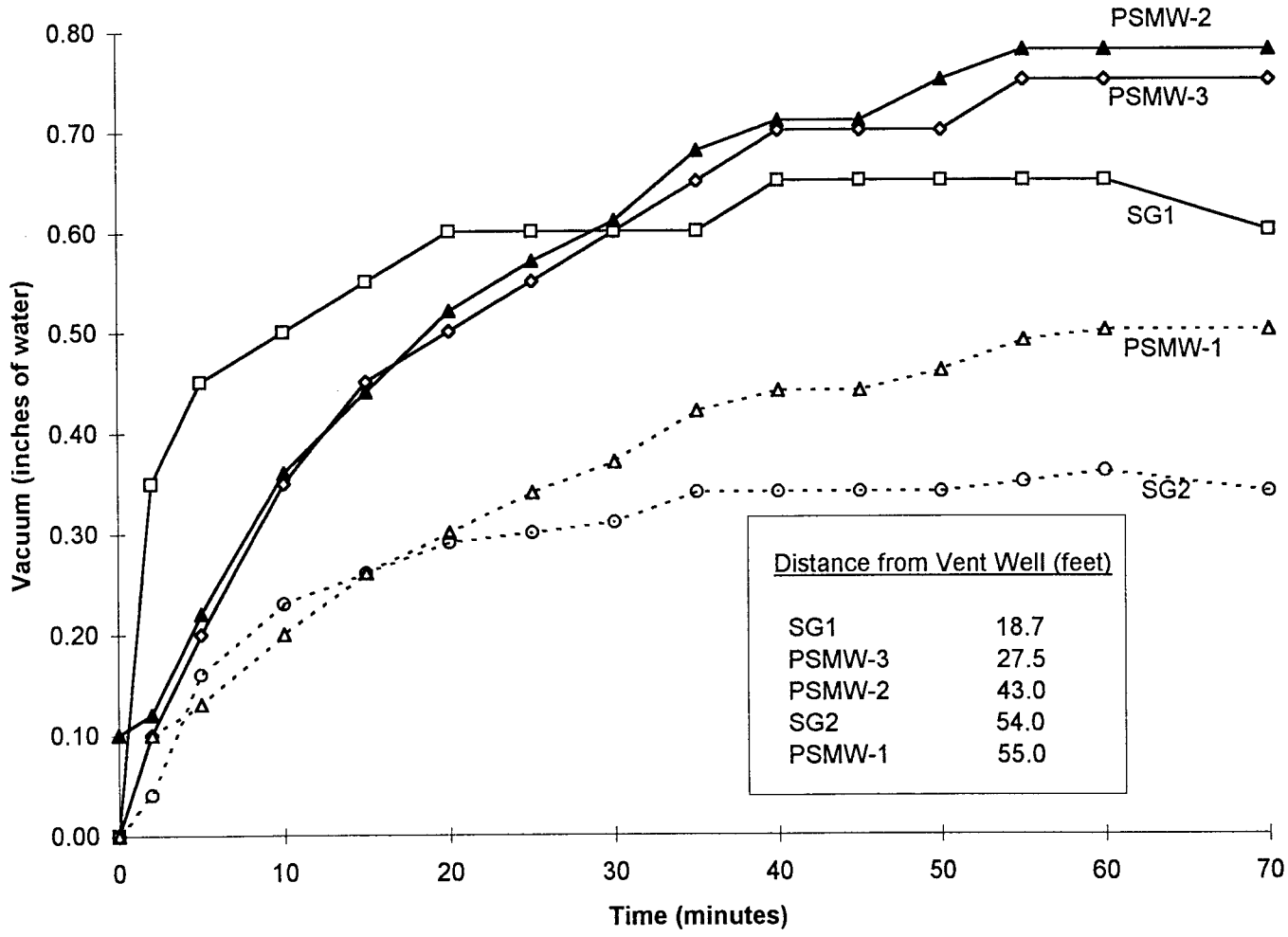

s:\cbs\misc\PSNMVAC.XLS

TABLE 2.3
VACUUM RADIUS OF INFLUENCE AT 100 SCFM
AUGUST 23, 1994
Person Generating Station

	Vacuum Monitoring Points				
	SG-1	PSMW-3	PSMW-2	SG-2	PSMW-1
Distance from VEW/DW (feet)	18.7	27.5	43.0	54.0	55.0
Time (minutes)	Vacuum (inches of water)				
0	0.00	0.00	0.10	0.00	0.00
2	0.35	0.10	0.12	0.04	0.10
5	0.45	0.20	0.22	0.16	0.13
10	0.50	0.35	0.36	0.23	0.20
15	0.55	0.45	0.44	0.26	0.26
20	0.60	0.50	0.52	0.29	0.30
25	0.60	0.55	0.57	0.30	0.34
30	0.60	0.60	0.61	0.31	0.37
35	0.60	0.65	0.68	0.34	0.42
40	0.65	0.70	0.71	0.34	0.44
45	0.65	0.70	0.71	0.34	0.44
50	0.65	0.70	0.75	0.34	0.46
55	0.65	0.75	0.78	0.35	0.49
60	0.65	0.75	0.78	0.36	0.50
70	0.60	0.75	0.78	0.34	0.50

TABLE 2.4
TOTAL VOCS REMOVED DURING STARTUP TEST
PERSON GENERATING STATION
BERNALILLO COUNTY, NEW MEXICO

COMPOUND	SAMPLE	TIME INTERVAL INTERVAL (hours)	REMOVAL RATE (lb/hr)	TOTAL REMOVED (lb)	
1,1-Dichloroethene	VEW-1	11	0.10	1.07	
1,1-Dichloroethene	VEW-2	23.5	0.11	2.47	
1,1-Dichloroethene	VEW-3	12.5	0.15	1.81	
					5.35
1,1,1-Trichloroethane	VEW-1	11	0.40	4.43	
1,1,1-Trichloroethane	VEW-2	23.5	0.21	4.82	
1,1,1-Trichloroethane	VEW-3	12.5	0.23	2.81	
					12.06
Tetrachloroethene	VEW-1	11	8.56	94.18	
Tetrachloroethene	VEW-2	23.5	5.47	128.47	
Tetrachloroethene	VEW-3	12.5	6.83	85.43	
					308.08
1,3,5-Trimethylbenzene	VEW-1	11	0.00	0.00	
1,3,5-Trimethylbenzene	VEW-2	23.5	0.00	0.00	
1,3,5-Trimethylbenzene	VEW-3	12.5	0.01	0.18	
					0.18
1,2,4-Trimethylbenzene	VEW-1	11	0.03	0.35	
1,2,4-Trimethylbenzene	VEW-2	23.5	0.00	0.00	
1,2,4-Trimethylbenzene	VEW-3	12.5	0.02	0.30	
					0.65
		TOTAL VOCs REMOVED			326.32

significant water vapor condensation which was occurring at the vapor discharge point. Extended Phase I SVE system operations were resumed in August 1995 after a 240-day shutdown (see Section 3). During this shutdown period, PNM also applied for and received a final air discharge permit from Bernalillo County (Attachment 3).

The significant reductions in VOC concentrations in extracted soil gas that occurred during the initial 57 days of SVE system operations are illustrated in Table 2.5. As predicted by initial soil sampling (Attachment 1), PCE was the primary soil gas contaminant, with much smaller quantities of 1,1-DCE, 1,1,1-TCA, and trimethylbenzene recovered. Based on the analysis of November 22, 1994 samples of extracted soil gas, only the 1,1-DCE discharge standard of 0.003 lbs/hour would have been exceeded without carbon treatment. The November 22, 1994 1,1-DCE concentration in the extracted soil gas was 5.8 ppmv, or 0.011 lbs/hour, at the 120-scfm extraction flow rate.

TABLE 2.5
VOLATILE ORGANICS IN EXTRACTED SOIL GAS (120 SCFM)
PERSON GENERATING STATION
BERNALILLO COUNTY, NEW MEXICO

	PCE		1,1,1 TCA		1,1 DCE		Daily Carbon Use
Date	ppmv	lb/hr	ppmv	lb/hr	ppmv	lb/hr	lbs. Carbon/day
8/23/94*	1400	9.24	82	0.043788	27	0.10368	893
8/25/94*	340	2.244	120	0.06408	60	0.2304	477
9/22/94	970	3.201	37	0.09879	60	0.1152	363
9/29/94	540	1.782	20	0.0534	26	0.04992	191
10/9/94	110	0.363	7.2	0.019224	13	0.02496	52
10/13/94	73	0.2409	10	0.0267	21	0.04032	56
10/20/94	44	0.1452	7.8	0.020826	14	0.02688	37
10/27/94	33	0.1089	6.1	0.016287	11	0.02112	28
11/3/94	20	0.066	4.6	0.012282	8.9	0.017088	21
11/10/94	13	0.0429	3.2	0.008544	6.5	0.01248	15
11/17/94	10	0.033	2.8	0.007476	5.8	0.011136	13
Total lbs. Removed		1141		66		57	

* Flow Rate at 240 SCFM

SECTION 3

EXTENDED PHASE I OPERATIONS AND SVE SYSTEM EFFECTIVENESS

3.1 EXTENDED SVE PHASE I PILOTING TESTING

The SVE system has now operated at the site for a total of 347 days. Three periods of operation have been completed. A 57-day startup/pilot test was completed in the fall of 1994 (Section 2). Based on these data, the single VEW placed near the center of the small RCRA soil unit was sufficient to remove VOCs from the entire contaminated soil volume. Following this 57-day test, the system was turned off for approximately 240 days to complete air permitting negotiations and to reduce condensation problems associated with winter operations. On August 9, 1995 the SVE system was restarted and operated for an additional 103 days in extended Phase I testing. The SVE system was shutdown again in November 1995 to avoid condensation problems associated with winter operation and then restarted again in March 1996. The system was operated an additional 187 days before being shut down in September 1996. During the initial and extended tests, GAC has been used to treat the soil gas and comply with the issued air permit.

3.1.1 Review of System Performance

During both the initial pilot test and extended pilot test, the extraction blower removed approximately 120 scfm of soil gas from the formation. Figure 3.1 illustrates the reduction in soil gas concentrations of PCE observed during initial and extended operation. Since the initial hours of operation when a PCE concentration of 8,900 milligrams per cubic meter (mg/m^3) was measured, the extracted PCE concentration has been reduced to 3.3 mg/m^3, a three order of magnitude reduction (analytical soil gas results are presented in Attachment 4). Significant reductions also have been observed for 1,1,1-TCA and 1,1-DCE.

At sites with relatively small quantities of contaminated soil, it is not unusual for soil gas concentrations to rapidly decrease as large quantities of clean soil gas are drawn through the contaminated soil core. However, there is strong evidence at this site that residual concentrations of PCE, and other contaminants that are sorbed onto soil particles, have also been reduced by several orders of magnitude. The most convincing evidence is the very limited "rebound" of PCE concentrations which occurred after the system had been turned off on two separate occassions, for 240 days and 111 days. During the 240-day period, the contaminants which remained sorbed to the soil were given time to volatilize into the soil gas and establish a new equilibrium soil gas concentration. The fact that the new equilibrium concentration of 77 mg/m^3 was less than 1 percent of the original equilibrium concentration of 8,900 mg/m^3

FIGURE 3.1
CONCENTRATION OF PCE IN SVE INFLUENT
Person Generating Station

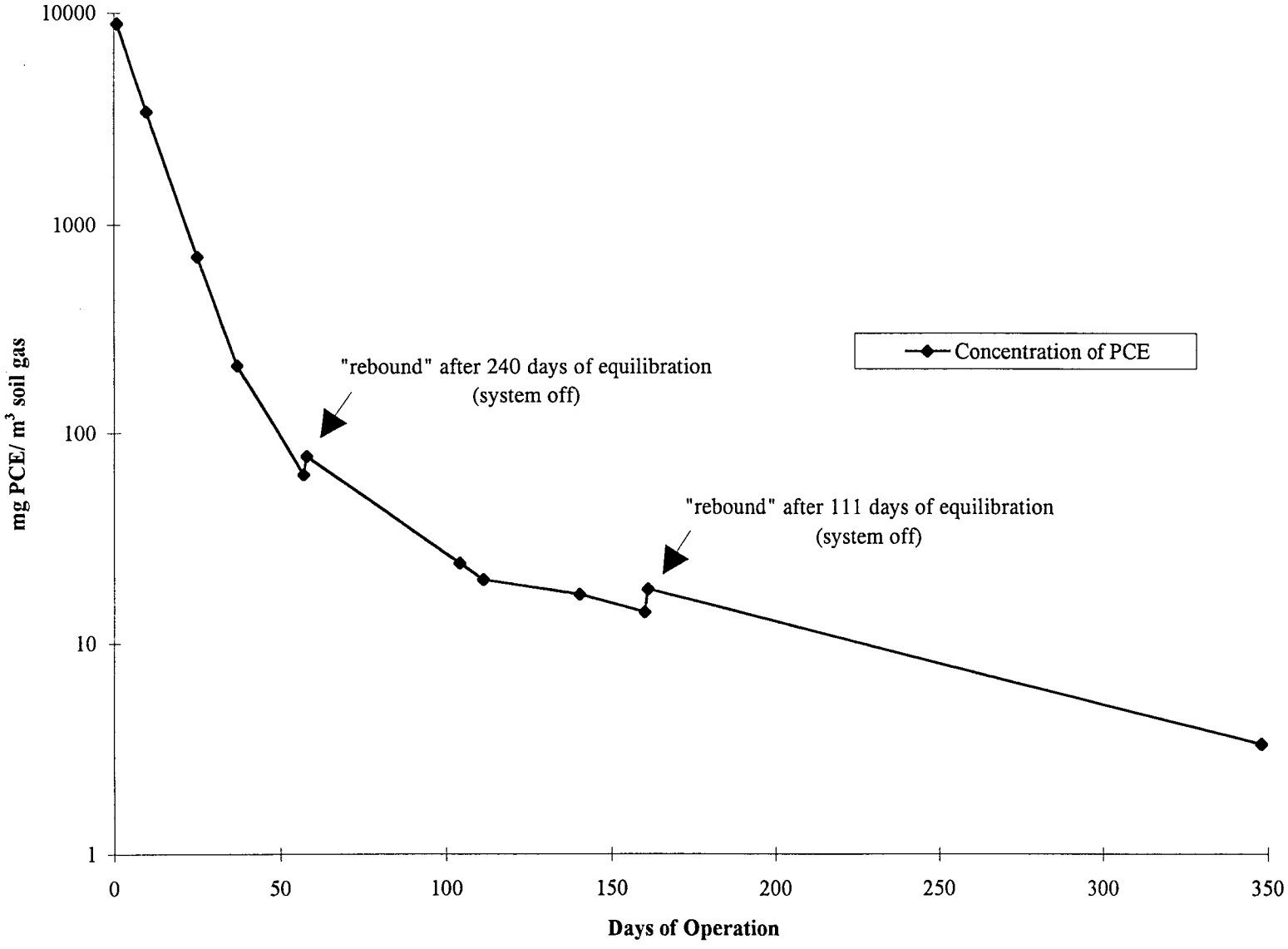

s:\cbs\misc\PSNMPCE.XLS

indicates that during the first 57 days of SVE operation the majority of the total contaminant mass was removed from the soil. The remaining 290 days of operation have been focused on removing the final five percent of the residual contamination.

Figure 3.2 provides a graphical illustration of the cumulative mass of each contaminant of concern that was removed by the SVE system during 347 days of operation. By September 1996 nearly 1,400 pounds of contaminants had been removed by the SVE system. PCE accounts for nearly 90 percent of the total VOCs that have been removed from the soil. The data also indicate that over 95 percent of the PCE was removed in the first 57 days of operation. This removal pattern is consistent with the fact that PCE was the primary waste product placed in the former waste oil vessel and that PCE was most concentrated in soils near the SVE well and directly below the former waste oil vessel. 1,1-DCE is a known breakdown product of 1,1,1-TCA. As 1,1,1-TCA seeped down toward the water table and into the groundwater, it was hydrolyzed into 1,1-DCE. This may explain why the recovery of 1,1-DCE has been more gradual over time as it is distributed over a larger area and has been released from the capillary fringe as the groundwater level has declined.

From day 140 to day 160 of Phase I operation, an average of 0.29 lb/day of chlorinated volatile organics was removed from the soil. Based on laboratory analysis of the soil gas collected in November 1995 following 160 days of total operation, all of the vapor concentrations measured at the influent to the GAC units were at or below permit requirement levels. During the third extraction period, which lasted 187 days (from March 20 to September 24, 1996), only 32 pounds of VOCs were removed as compared to the more than 1,300 pounds removed during the first 160 days of extraction.

3.1.2 Estimation of Residual Soil Contamination

Based on the soil gas data described above, it appears that approximately 99 percent of the initial soil contamination at the site may have been removed by the SVE system. To estimate the actual average concentrations of PCE, 1,1,1-TCA and 1,1-DCE that may persist in the soils, the vapor concentrations measured in the extracted soil gas during the last week of SVE operations (September 24, 1996) were assumed to be at equilibrium with soil concentrations. Based on the relatively minor rebound of soil gas concentrations following 240 days of equilibration, this simplifying assumption should only slightly underestimate the new equilibrium soil gas concentrations. The following equation was used to estimate the residual soil concentrations from soil gas data for each contaminant of concern.

$$C_v = \frac{H\, C_s\, \rho_s}{[\theta_w + k_s\, \rho_s + H\, \theta_v\,]}$$

Reference: Standard Guide for Risk-Based Corrective Action Applied at Petroleum Sites, E 1739-95, Issued by the American Society for Testing and Materials

FIGURE 3.2
CUMULATIVE MASS OF VOLATILE ORGANIC CONTAMINANTS REMOVED BY SVE SYSTEM
Person Generating Station

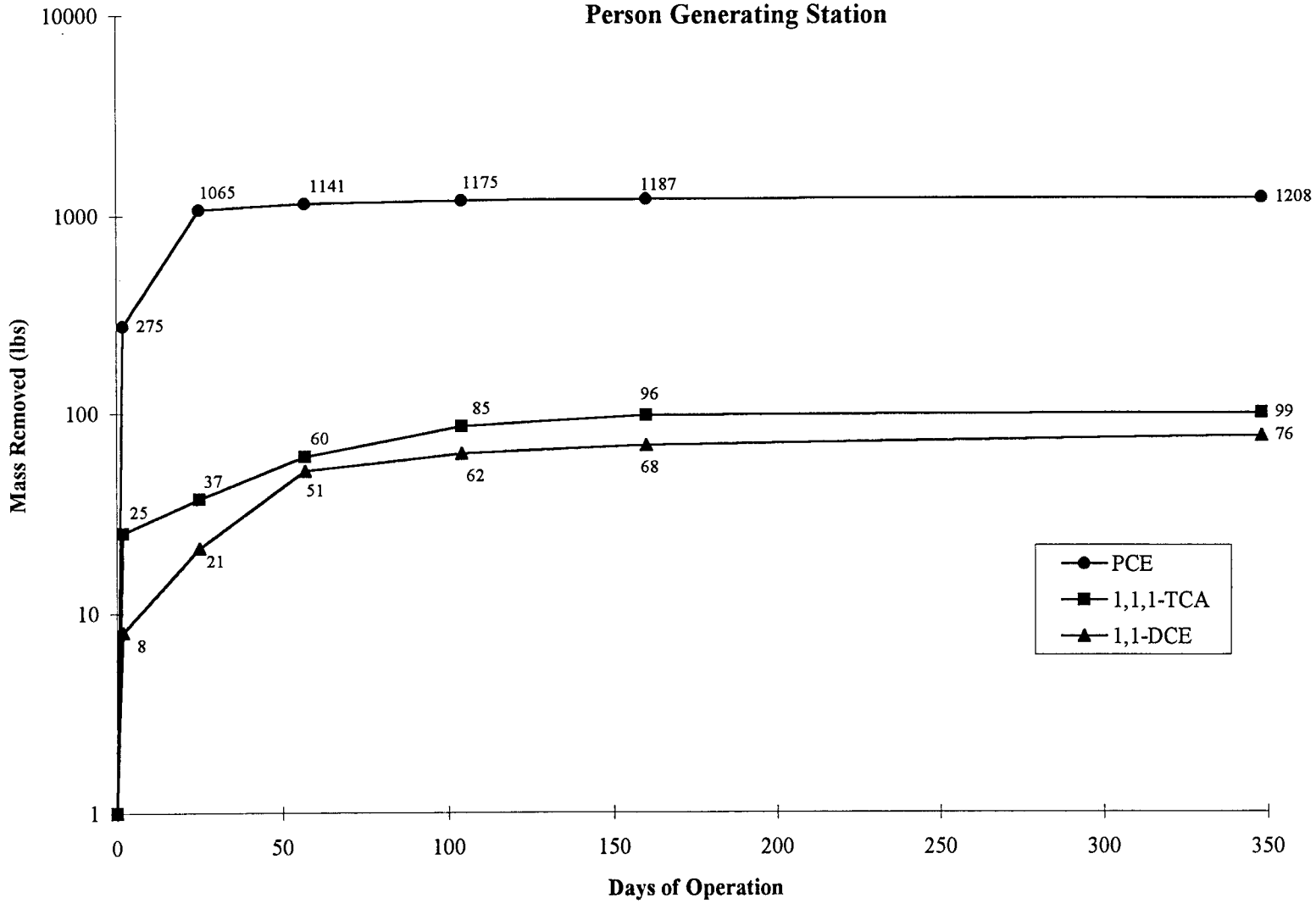

s:\cbs\misc\PSNMPCE.XLS

Where:

H = Henry's Law Constant [(g/cm^3-vapor)/(g/cm^3-H_2O)]

C_v = concentration in soil vapor [(g/cm^3-vapor)]

C_s = concentration in soil [(g/g-soil)]

k_s = sorption coefficient [(g/g-soil)/(g/cm^3-H_2O)]

θ_v = volumetric content of soil vapor [(cm^3-vapor/cm^3-soil)]

θ_w = volumetric content of soil pore water [(cm^3-H_2O/cm^3-soil)]

ρ_s = soil bulk density [(g-soil/cm^3-soil)]

The residual soil concentrations estimated using this relationship and the analytical soil gas data collected on September 24, 1996 are presented in Table 3.1. This equilibrium equation was independently verified using available soil analytical data and pre-SVE soil gas data. The objective of this verification exercise was to determine whether soil gas data can be used to reasonably approximate soil concentrations. A good correlation was observed between residual soil concentrations estimated from pre-SVE soil gas data and measured average soil concentrations. Attachment 6 includes example calculations.

3.1.3 Basis to Not Complete Further SVE Operations

These estimates of residual soil concentrations are useful in determining whether additional soil remediation or soil monitoring activities may be necessary to protect human health and the environment. If soil concentrations are less than those levels that result in unacceptable risks, the soils may be classified as decontaminated and can be closed (i.e., the SVE system can be decommissioned and all maintenance and monitoring requirements can be terminated) in accordance with 40 Code of Federal Regulations (CFR) 264.310. The conclusions of the risk assessment (ES, 1994b) for the Person Generating Station are an important element in identifying whether the soil unit is "clean enough to close" under RCRA regulations.

The focused risk assessment (ES, 1994b) indicated that the potential risks to current and hypothetical future human receptors associated with site contamination are not significant (i.e., calculated risk estimates fall within or below the carcinogenic target range of 1×10^{-6} to 1×10^{-4} and the noncarcinogenic hazard index of less than 1). These risk levels indicate the soil and groundwater remediation systems require only short periods of operation before contaminant concentrations that are protective of human health are achieved, and the treatment systems could be decommissioned. The focused risk assessment presented risk-based PRGs for soils that defined the residual level of chemical contamination that could remain in place and not present an unacceptable risk to human health. These risk-based PRGs were intended to guide decisions about the desired intensity and duration of soil remediation activities at the site.

TABLE 3.1
ESTIMATED RESIDUAL SOIL CONCENTRATIONS
PERSON GENERATING STATION
BERNALILLO COUNTY, NEW MEXICO

Contaminant	Soil Vapor Concentration Sept. 1996 (mg/m^3 soil vapor)	Estimated Residual Soil Concentration (mg/kg of soil)
Tetrachloroethene (PCE)	3.3	0.00381
1,1,1-Trichloroethane (TCA)	0.42	0.00031
1,1-Dichloroethene (DCE)	1.3	0.00046

Based on the residual soil concentrations estimated from data collected at the conclusion of the 347-day extended Phase I period, none of the target compounds exceeds its health-protective soil PRG for residential, industrial, or intrusive workers, as shown in Table 3.2 and as specified in the final risk assessment. In fact, the estimated soil concentrations for each of the target compounds are at least five orders of magnitude less than the most restrictive, health-protective PRGs presented in the final risk assessment (ES, 1994b).

The focused risk assessment did not develop PRGs that are protective of underlying groundwater quality (i.e., soil concentrations that protect against adverse groundwater impacts due to leaching). EPA (1996) has developed soil screening levels (SSLs) that define the average concentration of contaminant that can remain in onsite soils and not produce leachate at a concentration greater than the most restrictive maximum contaminant levels (MCLs). As shown in Table 3.2, none of the estimated residual soil concentrations exceed the groundwater-protective SSLs defined by EPA. In fact, the estimated residual concentrations are at least an order of magnitude below the groundwater-protective SSLs. Consequently, it is unlikely that the soils at the Person Generating Station would produce groundwater contamination in excess of the applicable MCLs even if leachate from soils were to contact groundwater. Because of the low precipitation levels and the presence of the RCRA cap at the site, the potential for leachate formation is low. The significant reductions in groundwater contaminants in the source area (VEW/DW) confirm that the source area soils are no longer contributing to groundwater contamination. Based on these data, PNM is not planning to pursue further operation of the SVE system at the Person Generating Station.

TABLE 3.2
COMPARISON OF ESTIMATED RESIDUAL SOIL CONCENTRATIONS VS. HEALTH-PROTECTIVE CLEANUP GOALS
PERSON GENERATING STATION
BERNALILLO COUNTY, NEW MEXICO

Contaminant	Estimated Residual Concentration (mg/kg)	Health-Protective Soil Concentrations (mg/kg) *Focused Risk Assessment* (Industrial)	Health-Protective Soil Concentrations (mg/kg) *Focused Risk Assessment* (Construction)	Health-Protective Soil Concentrations (mg/kg) *EPA Soil Screening Levels* (Residential)	Groundwater-Protective Soil Concentrations (mg/kg) *EPA Soil Screening Levels* (Residential)
Tetrachloroethene (PCE)	0.00381	367	4,585	11	0.06
1,1,1-Trichloroethane (TCA)	0.00031	61,320	61,320	1,200	2
1,1-Dichloroethene (DCE)	0.00046	32	397	0.07	0.06

s:\lab\pnmtab32.doc

SECTION 4

REFERENCES

Engineering-Science, Inc. (ES). 1994a. *Corrective Measures Proposal for the Person Generating Station*, Public Service Company of New Mexico, NMT360010342. Prepared for the Public Service Company of New Mexico, Albuquerque, New Mexico. January.

ES. 1994b. Focused Risk Assessment for Person Generating Station. Prepared for the Public Service Company of New Mexico, Albuquerque, New Mexico.

Johnson, P.C. *et al.*, 1990. *A Practical Approach to the Design, Operation, and Monitoring of In Situ Soil-Venting Systems*. Spring 1990 GWMR.

U.S. Environmental Protection Agency (USEPA). 1996. Soil Screening Guidance: Technical Background Document. Office of Solid Waste and Emergency Response, EPA/540/R-95/128, PB96-963502, Washington, D.C. May.

ATTACHMENT 1

SOIL ANALYTICAL RESULTS

(505) 345-8964
7300 Jefferson St. NE
Albuquerque, NM 87109

Analytical and Environmental Services

AnaCor Laboratories

Date: 8 November 1983
JV- 1192

To: PNM
Alvarado Square
Albuquerque, NM 87102

Attention: Jody Plum

Analyte	Sample ID/Analytical Results			
	PS2 32.7' (0955)	PS2 22.5'	PS2 50.0' (1045)	PS2 42.5' (1025)
% Moisture	4.95 %	7.85 %	6.56 %	3.64 %

An invoice for services is enclosed. Thank you for your consideration in contacting AnaCor Laboratories.

Sincerely,

Jennifer V. Smith, Ph.D.
Laboratory Director

Enclosure

(505) 343-0504
7300 Jefferson St. NE
Albuquerque, NM 87109

Analytical and Environmental Services

AnaCor Laboratories

To: PNM
Alvarado Square
Albuquerque, NM 87158

Date: 15 November 1983
JV- 1292 (Continued)

Attention: Jody Plum

Analyte: % Moisture

Sample ID	Analytical Results
PS-3 30'	3.14 % -(minor gravel to 1/4")
PS-3 40'	3.81 % -(minor gravel to 3/8")
PS-3 50'	2.87 % -(minor gravel to 1/4")
PS-3 60'	5.74 % *
PS-1 30'	3.67 % -(very minor gravel to 3/8")
PS-1 40'	4.27 % -(minor gravel to 1")
PS-1 50'	2.28 % -(common gravel to 1")
PS-4 2.5'	4.90 % -(asphaltic material some gravel to 3/8")
PS-4 5'	3.15 % -(minor gravel to 3/8")
PS-4 10'	3.98 % -(minor gravel to 1/2')
PS-4 15'	5.60 % -(some gravel to 3/8")
PS-4 20'	6.67 % *
PS-4 25'	5.08 % -(some gravel to 1/2")
PS-4 30'	5.78 % *
PS-4 35'	9.24 % *
PS-4 40'	4.32 % *
PS-4 50'	4.93 % -(minor gravel to 3/8")
PS-4 60'	5.11 % -(minor gravel to 1")
PS-4 70'	5.19 % -(some gravel to 3/8")
PS-4 80'	7.06 % *
PS-4 90'	5.69 % -(minor gravel to 3/8")
PS-5 15'	4.45 % -(common gravel to 3/8")
PS-5 20'	5.18 % *
PS-5 25'	5.89 % *
PS-5 30'	7.13 % *
PS-5 35'	7.05 % *
PS-5 40'	4.43 % -(minor gravel to 1/4")
PS-5 45'	5.28 % *
PS-5 50'	6.68 % *
PS-5 60'	3.42 % -(some gravel to 3/4")
PS-5 70'	3.10 % -(common gravel to 3/8")
PS-5 80'	2.39 % -(some gravel to 1/4")
PS-5 90'	2.76 % -(common gravel to 1")

To: PNM

*= Graded Sand

An invoice for services is enclosed. Thank you for your consideration in contacting AnaCor Laboratories.

Sincerely,

Jennifer V. Smith, Ph.D.
Laboratory Director

Enclosure

ASSAIGAI

ANALYTICAL LABORATORIES, INC.

To: PNM
Alvarado Square
Albuquerque, NM 87158

Date: 29 December 1983
0007

Attention: Jody Plum

Sample ID	Analytical Results / % Moisture	
PS-6:		
10'-11.5'	4.80 %	Sand, minor gravel to 3/4"
20'-21.5'	4.81 %	Graded sand
30'-31.5'	4.25 %	Sand, some gravel to 1/2"
40'-41.5'	5.03 %	Sand, some gravel to 1/4"
50'-51.5'	3.59 %	Sand, some gravel to 1/4", minor gravel to 1'
60'-61.5'	4.77 %	Sand, silt, minor gravel to 1"
70'-71.5'	4.29 %	Sand, minor gravel to 1/4"
80'	4.99 %	Sand, minor gravel to 1/4"
90'	4.93 %	Sand, some gravel to 1"
PS-7:		
10'-11.5'	5.55 %	Graded sand
20'-21.5'	3.85 %	Sand, minor gravel to 3/4"
30'-31.5'	4.18 %	Sand, minor gravel to 1/4"
40'-41.5'	4.19 %	Sand, minor gravel to 3/4"
50'-51.5'	2.88 %	Graded sand
60'	4.75 %	Sand, minor gravel to 1/4"
70'	2.81 %	Sand, minor gravel to 3/8"
80'	2.89 %	Sand, gravel to 1/2"
90'	4.93 %	Graded sand
PS-8:		
10'	3.37 %	Sand, gravel to 1 1/2"
20'	2.89 %	Sand, minor gravel to 3/8"
30'	3.82 %	Sand, minor gravel to 3/8"
40'	3.24 %	Sand, gravel to 1"
50'	6.02 %	Graded sand, silt
60'-61.5'	7.99 %	Graded sand
70'	4.26 %	Sand, gravel to 3/4"
80'	3.99 %	Sand, gravel to 1"

To: PNM

Sample ID	Analytical Results/% Moisture	
PS-8:		
90'	3.91 %	Sand, minor gravel to 1/4"
95'	4.50 %	Graded sand
100'	9.27 %	Graded sand, silt
105'	7.31 %	Sand, gravel to 1/2"
110'	11.07 %	Sand, clay, minor gravel to 1/4"
PS-9:		
10'	4.80 %	Sand, minor gravel to 1/4"
30'	4.89 %	Graded sand
40'	5.77 %	Graded sand
50'	4.48 %	Sand, gravel to 1/4"
60'	3.57 %	Sand, minor gravel to 1/4"
70'	4.25 %	Sand, gravel to 1 1/4"
80'	7.10 %	Sand, gravel to 1/2"
90'	3.69 %	Graded sand
95'	9.98 %	Sand, minor gravel to 1/2"
100'	3.98 %	Sand, gravel to 1 1/2"
102.5'	3.23 %	Sand, gravel to 1/2"
107.5'	8.83 %	Sand, gravel to 1/2"
No Depth	3.36 %	Graded sand
PS-10:		
10.0'	3.47 %	Sand, minor gravel to 3/8"
20.0'	3.39 %	Graded sand
30.0'	5.58 %	Sand, minor gravel to 3/4"
40'	5.34 %	Sand, minor gravel to 3/4"
50'	2.82 %	Sand, gravel to 1/2"
60'	2.32 %	Sand, gravel to 3/4"
65'	3.62 %	Sand, gravel to 1/4"
70'	6.14 %	Sand, gravel to 3/8"
80'	6.52 %	Sand, minor gravel to 3/8"
90'	7.30 %	Graded sand
95'	2.94 %	Sand, gravel to 3/8"
100'	6.04 %	Graded sand
105'	10.59 %	Sand, minor, broken gravel to 3/4"
110'	9.23 %	Graded sand, clay
112.5'	9.80 %	Sand, some gravel to 3/4"
112.5'(top of core barrell)	11.61 %	Sand, clay, gravel to ½"

To: PNM

Sample ID	Analytical Results/% Moisture	
PS-11:		
50'-51.5'	2.99 %	Graded sand
60'-61.5'	4.38 %	Sand, minor gravel to 1/2"
70'	3.51 %	Sand, minor gravel to 1"
80'	4.36 %	Sand, gravel to 1/4"
90'	4.18 %	Sand, gravel to 1/4"
PS-12:		
10'-11.5'	3.98 %	Sand, minor gravel to 1/2"
20'-21.5'	3.26 %	Sand, broken gravel to 3/4"
30'-31.5'	2.61 %	Sand, broken gravel to 1"
40'-41.5'	5.77 %	Sand, gravel to 3/4"
50'-51.5'	4.10 %	Graded sand
60'-61.5'	2.10 %	Sand, gravel to 1"
70'-71.5'	3.28 %	Sand, broken gravel to 1 1/2"
80'	3.38 %	Graded sand
90'-91.5'	9.12 %	Graded sand, clay
PS-13:		
Surface	6.61 %	Sand, some gravel to 3/4"
10'	2.65 %	Sand, minor gravel to 1/4"
20'	3.94 %	Sand, gravel to 3/8"
30'	9.29 %	Graded sand
40'	2.67 %	Sand, some gravel to 1/2"
50'	3.72 %	Sand, gravel to 1/4"
60'	3.59 %	Sand, gravel to 1"
70'	3.54 %	Sand, gravel to 1"
80'	3.47 %	Sand, gravel to 1/4"
90'	4.34 %	Sand, some gravel to 1"

Reference: USDA Handbook, #60, Modified

An invoice for services is enclosed. Thank you for your consideration in contacting Assaigai Laboratories.

Sincerly,

Jennifer Y. Smith, Ph.D.
Laboratory Director

Enclosure

ASSAIGAI

ANALYTICAL LABORATORIES, INC.

To: PNM
Alvarado Square
Albuquerque, NM 87158

Date: 6 February 1984
0176

Attention: Jody Plum

Analyte: % Moisture

Sample Identification	Analytical Results
PS-14:	
10'	1.09 % Graded sand
20'	2.73 % Graded sand
30'	3.11 % Graded sand
40'	3.86 % Graded sand
50'	2.32 % Sand, gravel to 1/2"
60'	9.42 % Sand, clay, minor gravel to 3/8"
70'	4.87 % Sand, some gravel to 1"
80'	4.51 % Sand, minor gravel to 1/4"
90'	2.67 % Sand, gravel to 3/4"
PS-15:	
10'	2.57 % Graded sand
20'	3.44 % Graded sand
30'	3.02 % Graded sand
40'	3.74 % Sand, minor gravel to 1/2"
50'	2.56 % Graded sand
60'	4.56 % Sand, minor gravel to 1"
70'	4.14 % Sand, some gravel to 3/8"
80'	4.15 % Sand, clay, some gravel to 1/2"
90'	3.83 % Sand, minor gravel to 3/8"
PS-16:	
10'	3.19 % Sand, minor gravel to 1/4"
20'	5.24 % Sand, some gravel to 1"
30'	6.16 % Sand, minor gravel to 1/4"
50'	3.40 % Graded sand
60'	3.40 % Sand, minor gravel to 1/4 "
70'	3.55 % Sand, some gravel to 1/4"
80'	3.05 % Sand, some gravel to 1"
90'	4.45 % Sand, minor gravel to 3/8"

To: PNM

Sample Identification	Analytical Results
PS-17:	
10'	4.20 % Graded sand
20'	3.56 % Sand, very minor gravel to 1/4"
30'	2.27 % Sand, gravel to 1/2"
40'	4.88 % Sand, some gravel to 1"
50'	2.94 % Graded sand
60'	3.22 % Sand, gravel to 3/8"
70'	7.44 % Sand,clay, minor gravel to 1/2"
80'	2.26 % Sand, gravel to 3/8"
90'	7.05 % Sand, clay, some gravel to 3/8"
PS-18:	
10'	2.84 % Sand, gravel to 1"
20'	4.49 % Sand, minor gravel to 1/2"
30'	3.55 % Graded sand
40'	8.32 % Sand, clay
50'	3.96 % Sand, minor gravel to 1/4"
60'	3.55 % Sand, some gravel to 1/2"
70'	7.80 % Sand, clay, broken gravel to 1/2"
80'	2.39 % Sand, gravel to 1/2"
90'	10.26 % Sand, clay, minor gravel to 1/2"
PS-19:	
10'	5.64 % Graded sand
20'	9.14 % Graded sand
30'	3.97 % Graded sand
40'	3.53 % Sand, some gravel to 1"
50'	4.08 % Sand, minor gravel to 1/4"
60'	8.70 % Sand, some broken gravel to 1/2"
70'	9.70 % Sand, clay, some gravel to 1"
80'	5.49 % Sand, minor gravel to 3/8"
80'	2.75 % Sand, gravel to 1/2"
90'	6.42 % Sand, some gravel to 1/2"

Reference: USDA Handbook, #60, Modified

An invoice for services is enclosed. Thank you for your consideration in contacting Assaigai Laboratories.

Sincerely,

Jennifer V. Smith, Ph.D.
Laboratory Director

Enclosure

SAIGAI
ANALYTICAL LABORATORIES, INC.

To: PNM
Alvarado Square
Albuquerque, NM 87158

Date: 14 February 1994
0169

Attn: Jody Plum

Analyte: Tetrachloroethylene

Sample ID	Analytical Results
14:	
0'	0.032 ppm
10'	0.029 ppm
20'	0.053 ± 0.016 ppm N=2
30'	231.5 ppm
40'	0.024 ± 0.010 ppm N=4
50'	0.727 ± 0.103 ppm N=4
60'	0.035 ppm
70'	0.024 ± 0.001 ppm N=2
80'	0.003 ppm
90'	0.005 ppm
15:	
0'	0.030 ppm
10'	0.447 ppm
20'	0.017 ± 0.007 ppm N=4
30'	580.0 ppm
40'	0.018 ± 0.006 ppm N=2
50'	<0.001 ppm
60'	<0.001 ppm
70'	<0.001 ppm
80'	<0.001 ppm
90'	<0.001 ppm N=2
16:	
0'	0.137 ±0.030 ppm N=2
10'	<0.001 ppm
20'	<0.001 ppm
30'	<0.001 ppm
40'	<0.001 ppm
50'	<0.001 ppm N=2
60'	<0.001 ppm
70'	<0.001 ppm
80'	<0.001 ppm
90'	<0.001 ppm
17:	
0'	0.029 ppm
10'	0.005 ±0.002 ppm N=2
20'	<0.001 ppm
30'	<0.001 ppm
40'	0.002 ppm
50'	<0.001 ppm
60'	<0.001 ppm N=2
70'	0.027 ppm
80'	<0.001 ppm
90'	<0.001 ppm
18:	
0'	0.126 ppm
10'	0.007 ppm
20'	0.005 ppm
30'	0.005 ± 0.002 ppm N=2
40'	0.004 ppm
50'	0.010 ppm
60'	0.039 ppm
70'	<0.001 ppm
80'	<0.001 ppm
90'	<0.001 ppm
19:	
0'	22.5 ±0.45 ppm N=2
10'	0.020 ppm
20'	0.015 ppm
30'	0.008 ppm
40'	0.005 ppm
50'	0.004 ppm
60'	<0.001 ppm
70'	<0.001 ppm
80'	<0.001 ppm
90'	<0.001 ppm N=2
PSMW1:	
0'	<0.001 ppm
10'	<0.001 ppm
20'	<0.001 ppm
30'	<0.001 ppm N=2
40'	<0.001 ppm
50'	<0.001 ppm
60'	<0.001 ppm
70'	<0.001 ppm N=2

To: PNM

Analtve: Tetrachloroethylene

mple ID	Analytical Results
PSMW1:	
0'	<0.001 ppm
0'	<0.001 ppm
100'	<0.001 ppm
MW2:	
0'	<0.001 ppm
10'	<0.001 ppm
20'	<0.001 ppm
30'	<0.001 ppm
40'	<0.001 ppm N=2
50'	<0.001 ppm
60'	<0.001 ppm
70'	<0.001 ppm
80'	<0.001 ppm N=2
90'	<0.001 ppm
100'	<0.001 ppm

Sample ID	Analytical Results
PSMW3:	
10'	<0.001 ppm N=2
20'	<0.001 ppm
30'	<0.001 ppm
40'	<0.001 ppm
50'	<0.001 ppm N=2
60'	<0.001 ppm
70'	<0.001 ppm
80'	<0.001 ppm
90'	<0.001 ppm
100'	<0.001 ppm
110'	<0.001 ppm

naltve: Trichloroethane

14:	
50'	0.099 0.051 ppm
90'	<0.001 ppm
15:	
30'	0.252 ppm
80'	<0.001 ppm
16:	
0'	0.002 ppm
70'	<0.001 ppm
17:	
20'	<0.001 ppm
80'	<0.001 ppm
18:	
0'	0.040 ppm
60'	<0.001 ppm

19:	
0'	1.83 ppm
40'	<0.001 ppm
PSMW1:	
20'	<0.001 ppm
60'	<0.001 ppm
PSMW2:	
30'	<0.001 ppm
70'	<0.001 ppm
PSMW3:	
10'	<0.001 ppm
90'	<0.001 ppm

Normal Detection Limits:

Trichloroethane	0.01 mg/l
Tetrachloroethylene	0.01 mg/l

Reference: "Organic Analysis Using Gas Chromatography/Mass Spectrometry", 1979, Budde & Eichelberger, Ann Arbor Science.

To: PNM

An invoice for services is enclosed. Thank you for your consideration in contacting Assaigai Laboratories.

Sincerely,

Jennifer V. Smith

Jennifer V. Smith, Ph.D.
Laboratory Director

Enclosure

ASSAIGAI

ANALYTICAL LABORATORIES, INC.

To: PNM
Alvarado Square
Albuquerque, NM 87158

Date: 16 February 1984
0176

Attention: Jody Plum

Analyte: % Moisture

Sample Identification	Anlytical Results	
PSMW-1		
60'	4.84 %	Graded sand
70'	2.82 %	Sand, gravel to 3/4"
80'	1.90 %	Sand, silt, gravel to 3/8"
89'	10.46 %	Sand, silt, gravel to 1"
100'	2.30 %	Sand, gravel to 1 3/4"
115'	11.24 %	Sand, gravel to 3/4"
PSMW-2		
10'	1.55 %	Sand, gravel to 1"
20'	4.76 %	Sand, minor gravel to 1/4'
30'	5.05 %	Graded sand
40'	5.86 %	Graded sand
50'	6.61 %	Sand, gravel to 1/2"
60'	3.74 %	Sand, minor gravel to 1/4"
70'	10.46 %	Sand, silt, minor gravel to 1/2"
80'	3.34 %	Graded sand
90'	8.93 %	Sand, silt
110'	11.42 %	Sand, minor gravel to 1"
PSMW-3		
10'	3.20 %	Graded sand
20'	10.15 %	Sand, silt
30'	3.45 %	Sand, minor gravel to 1/4"
40'	3.77 %	Sand, minor gravel to 1/4"
50'	2.68 %	Sand, gravel to 1/4"
60'	3.58 %	Sand, gravel to 1/4"
70'	4.02 %	Sand, gravel to 1"
80'	6.38 %	Sand, silt
90'	4.13 %	Sand, some gravel to 1"
110'	8.30 %	Sand, silt, some gravel to 1"

To: PNM

Reference: USDA Handbook, #60 Modified

An invoice for services is enclosed. Thank you for your consideration in contacting Assaigai Laboratories.

Sincerely,

Jennifer V. Smith, Ph.D.
Laboratory Director

Enclosure

ATL ENGINEERING SERVICES

Albuquerque Testing Laboratory, Inc.
532 Jefferson N.E. (87108)
P. O. Box 4101 (87106)
Albuquerque, New Mexico
(505) 268-4537

November 11, 1983

ATL Lab. No. 4829-83

Geoscience Consultants
222 Copper Square
500 Copper Avenue
Albuquerque, New Mexico 87102

Attention: Alberto Gutierrez

Gentlemen:

Samples submitted to our laboratory on November 9, 1983 by Alberto Gutierrez of Geoscience Consultants for particle size analyses.

TEST DATA:

Sample No. 1: Combined Samples
PS 4/12.5, 8310260935 and PS 4/17.5', 8310260945

Sample No. 2: Combined Samples
PS 4/60', 8310261350 and PS 4/75', 8310261445

TEST RESULTS:

U.S. Sieve Size	Cumulative Percent Passing Sample #1	Sample #2
3/4"	---	100
12.7mm 1/2"	100	98.9
9.5mm 3/8"	95.5	97.7
4.8mm No. 4	91.8	93.9
2mm No. 10	87.5	87.5
.42mm No. 40	58.5	58.0
.175mm No. 80	21.2	29.4
.074mm No. 200	8.7	13.6
Wash Test	7.9	12.2

Respectfully submitted

ATL ENGINEERIRNG SERVICES

James H. Clary,
Certified Professional Geologist

ENGINEERING SERVICES

Albuquerque Testing Laboratory, Inc.
532 Jefferson N.E. (87108)
P. O. Box 4101 (87106)
Albuquerque, New Mexico
(505) 268-4537

November 11, 1983

ATL Lab. No. 4829-83

Geoscience Consultants
222 Copper Square
500 Copper Avenue
Albuquerque, New Mexico 87102

Attention: Alberto Gutierrez

Gentlemen:

Samples submitted to our laboratory on November 9, 1983 by Alberto Gutierrez of Geoscience Consultants for particle size analyses.

TEST DATA:

Sample No. 1: Combined Samples
PS 4/12.5, 8310260935 and PS 4/17.5', 8310260945

Sample No. 2: Combined Samples
PS 4/60', 8310261350 and PS 4/75', 8310261445

TEST RESULTS:

U.S. Sieve Size		Cumulative Percent Passing Sample #1	Sample #2
	3/4"	---	100
12.7mm	1/2"	100	98.9
9.5mm	3/8"	95.5	97.7
4.8mm	No. 4	91.8	93.9
2.0mm	No. 10	87.5	87.5
.42mm	No. 40	58.5	58.0
.175mm	No. 80	21.2	29.4
.074mm	No. 200	8.7	13.6
	Wash Test	7.9	12.2

Respectfully submitted

ATL ENGINEERIRNG SERVICES

James H. Clary,
Certified Professional Geologist

(505) 345-8964
7300 Jefferson St. NE
Albuquerque, NM 87109

Analytical and Environmental Services

Mountain Laboratories

To: PNM
Alvarado Square
Albuquerque, NM 87158

Date: 8 November 1983
JV- 1192

Attention: Jody Plum

Analyte: Tetrachloroethylene

Sample ID	Analytical Results	Sample ID	Analytical Results
1 - Surface	0.062 ppm	3 - 60'	0.032 ppm
1 - 10'	0.030 ppm	4 - Surface	0.017 ppm
1 - 20'	0.015 ppm	4 - 10'	371.5 ppm
1 - 30'	0.025 ppm	4 - 20'	230.2 ppm
1 - 40'	0.020 ppm	4 - 30'	236.8 ppm
1 - 50'	0.015 ppm	4 - 40'	263.3 ± 70.4 ppm
2 - Surface	57.3 ± 31.9 ppm	4 - 50'	305.7 ± 113.2 ppm
2 - 10'	0.006 ppm	4 - 60'	156.27 ppm
2 - 20'	0.003 ppm	4 - 70'	0.006 ± 0.002 ppm
2 - 30'	0.004 ppm	4 - 80'	0.010 ± 0.003 ppm
2 - 40'	0.007 ppm	4 - 90'	0.019 ± 0.016 ppm
2 - 50'	0.052 ppm	5 - 15'	2127.0 ppm
3 - Surface	0.009 ppm	5 - 20'	202.7 ppm
3 - 10'	0.005 ppm	5 - 30'	167.6 ppm
3 - 15'	700.0 ppm	5 - 40'	438.5 ± 211.0 ppm
3 - 20'	361.7 ppm	5 - 50'	295.2 ± 40.0 ppm
3 - 32.5	613.0 ppm	5 - 60'	0.013 ppm
3 - 30'	405.6 ppm	5 - 70'	0.002 ppm
3 - 40'	451.8 ppm	5 - 80'	0.004 ± .0006 ppm
3 - 50'	18.0 ppm	5 - 90'	0.011 ± 0.006 ppm

Normal Detection Limit : .001 mg/l

Reference: "Test Methods for Evaluating Solid Waste", 2nd Edition, USEPA, SWER, SW846, 1982.

To: PNM

An invoice for services is enclosed. Thank you for your consideration in contacting AnaCor Laboratories.

Sincerely,

Jennifer V. Smith

Jennifer V. Smith, Ph.D.
Laboratory Director

Enclosure

ASSAIGAI
ANALYTICAL LABORATORIES, INC.

To: PNM
Alvarado Square
Albuquerque, NM 87158

Date: 12 January 1984
0007 (Cont.)

Attention: Jody Plum

Analyte: Tetrachloroethylene

Sample ID	Analytical Results
Hole 6:	
0'	0.052 ± 0.009 ppm
10'	0.028 ± 0.004 ppm
20'	0.018 ± 0.002 ppm
30'	0.009 ± 0.004 ppm
40'	0.011 ± 0.010 ppm
50'	0.020 ± 0.004 ppm
60'	<0.001 ppm
70'	0.042 ± 0.006 ppm
80'	<0.001 ppm
90'	0.009 ppm
Hole 7:	
0'	0.156 ±0.005 ppm
10'	0.012 ppm
20'	15.8 ppm
30'	1443.8 ±134.4 ppm
40'	593.6 ppm
50'	820.9 ppm
60'	240.8 ppm
70'	0.028 ± 0.011 ppm
80'	0.003 ppm
90'	0.002 ppm
Hole 8:	
0'	0.575 ppm
10'	0.011 ± 0.004 ppm
20'	0.079 ppm
30'	0.052 ppm
40'	0.003 ppm
50'	0.045 ± 0.005 ppm
Hole 8:	
60'	0.065 ppm
70'	0.002 ppm
80'	0.086 ppm
90'	0.008 ppm
100'	0.004 ± 0.003 ppm
Hole 9:	
0'	20.9 ppm
10'	0.030 ppm
20'	0.021 ppm
30'	0.010 ppm
40'	0.002 ppm
50'	0.013 ppm
60'	<0.001 ppm
70'	<0.001 ppm
80'	<0.001 ppm
90'	<0.001 ppm
100'	<0.001 ppm
107.5'	<0.001 ppm
Hole 10:	
0'	0.320 ppm
10'	0.017 ppm
20'	59.1 ppm
30'	331.4 ± 16.5 ppm
40'	0.021 ppm
50'	0.009 ppm
60'	<0.001 ppm
70'	0.061 ppm
80'	0.040 ppm
90'	0.006 ppm

To: PNM

Analyte:Tetrachloroethylene

Sample ID	Analytical Results
Hole 10:	
100'	<0.001 ppm
Hole 11:	
10'	0.121 ppm
20'	<0.001 ppm
30'	0.006 ppm
40'	0.007 ppm
50'	0.002 ppm
60'	0.002± 0.0005 ppm
70'	0.004 ppm
80'	0.002 ppm
90'	<0.001 ppm
Hole 12:	
0'	0.169 ppm
10'	0.004 ppm
20'	0.005 ppm
30'	0.020 ppm
40'	0.012± 0.001 ppm
50'	0.012± 0.013 ppm
60'	0.001 ppm
70'	0.084± 0.053 ppm
80'	0.064 ppm
90'	0.009 ppm
Hole 13:	
0'	0.100 ppm
10'	23.3 ppm
20'	21.9 ppm
25'	492.4 ± 65.1 ppm
30'	391.1 ± 48.1 ppm
40'	0.011 ± 0.007 ppm
50'	0.001 ppm
55'	0.090 ± 0.017 ppm
60'	0.025 ± 0.009 ppm
70'	0.002 ±0.0005 ppm
80'	0.031 ppm
90'	0.013 ± 0.010 ppm

To: PNM

Analyte: Trichloroethane

Sample ID	Analytical Results
Hole 7:	
30'	168.3 ± 5.9 ppm
60'	30.16 ppm
Hole 8:	
0'	0.152 ppm
50'	0.017 ± 0.002 ppm
Hole 9:	
0'	1.388 ppm
40'	<0.001 ppm
Hole 10:	
0'	0.28 ppm
20'	0.145 ppm
Hole 11:	
60'	0.003 ppm
80'	<0.001 ppm
Hole 12:	
10'	0.002 ppm
40'	0.003 ppm
Hole 13:	
10'	0.173 ppm
60'	<0.001 ppm

Analyte	Sample ID/Analytical Results	
	5-15	Jar,Blow Sand next to casing #83-10-18-1431
Trichloroethane	12.6 ppm	13.7 ppm
Tetrachloroethylene	43.7 ppm *	239.0 ppm
EP-Toxicity Pb	<0.002 ppm	1.6 ppm

* Sample has been opened many times.

To: PNM

Normal Detection Limits:

Trichloroethane	0.01 mg/l
Tetrachloroethylene	0.01 mg/l
Pb	0.002 mg/l

Reference: "Organic Analysis Using Gas Chromatography/Mass Spectometry", 1979, Budde & Eichelberger, Ann Arbor Science.

An invoice for services is enclosed. Thank you for your consideration in contacting Assaigai Laboratories.

Sincerely,

Jennifer V. Smith

Jennifer V. Smith, Ph.D.
Laboratory Director

Enclosure

ASSAIGAI

ANALYTICAL LABORATORIES, INC.

Pason - Laboratory analysis

To: PNM
Alvarado Square
Albuquerque, NM 87158

Date: 24 January 1984
0007 (Cont.)

Attention: Jody Plum

Analyte: Pb

Sample ID	Analytical Results	Sample ID	Analytical Results
6-30	<0.002 ppm	11-10	<0.002 ppm
6-40	<0.002 ppm	11-20	<0.002 ppm
7-20	<0.002 ppm	12-0	<0.002 ppm
7-30	<0.002 ppm	12-30	<0.002 ppm
8-20	<0.002 ppm	13-25	<0.002 ppm
8-30	<0.002 ppm	13-30	<0.002 ppm
9-0	<0.002 ppm	13-40	<0.002 ppm
9-10	<0.002 ppm	13-55	<0.002 ppm
10-20	<0.002 ppm	13-90	<0.002 ppm
10-30	<0.002 ppm		

Normal Detection Limit: 0.002 mg/l

Reference: "Standard Methods for the Examination of Water and Wastewater", 15th Edition, APHA, N.Y., 1980.

An invoice for services is enclosed. Thank you for your consideration in contacting Assaigai Laboratories.

Sincerely,

Jennifer V. Smith, Ph.D.
Laboratory Director

Enclosure

→7300 Jefferson, N.E. → Albuquerque, New Mexico 87109 →

ASSAIGAI

ANALYTICAL LABORATORIES, INC.

To: PNM
Alvarado Square
Albuquerque, NM 87109

Date: 24 January 1984
0007 (Cont.)

Attention: Jody Plum

Analyte: PCB

Sample Identification	Analytical Results
#1 13-25	ND *
#2 13-40	ND
#3 13-55	ND
#4 13-90	ND

Normal Detection Limit: 1.0

*ND= None Detected, <1.0

Reference: EPA Method 604

An invoice for services is enclosed. Thank you for your consideration in contacting Assaigai Laboratories.

Sincerely,

Jennifer V. Smith, Ph.D.
Laboratory Director

Enclosure

→7300 Jefferson, N.E. → Albuquerque, New Mexico 87109 →

ASSAIGAI

ANALYTICAL LABORATORIES, INC.

To: PNM
Alvarado Square
Albuquerque, NM 87158

Date: 16 February 1984
0176

Attention: Jody Plum

Analyte: Pb

Sample Identification	Analytical Results
PS-15 20'	<0.001 ppm
PS-16 90'	<0.001 ppm
PS-17 40'	<0.001 ppm
PS-17 25'	<0.001 ppm
PS-18 50'	<0.001 ppm
PS-19 30'	<0.001 ppm
PS-18 20'	<0.001 ppm
PSMW-2 30'	<0.001 ppm
PS-19 20'	<0.001 ppm
PSMW-1 20'	<0.001 ppm
PSMW-1 10'	<0.001 ppm
PS-14 Surface	<0.001 ppm
PS-14 70'	<0.001 ppm
PSMW-2 20'	<0.001 ppm
PS-15 30'	<0.001 ppm
PS-15 10'	<0.001 ppm
PSMW-3 90'	<0.001 ppm
PSMW-3 40'	<0.001 ppm

Normal Detection Limit: 0.001 mg/l
Reference: 40 CFR Part 261

An invoice for services is enclosed. Thank you for your consideration in contacting Assaigai Laboratories.

Sincerely,

Jennifer V. Smith, Ph.D.
Laboratory Director

Enclosure

→7300 Jefferson, N.E. → Albuquerque, New Mexico 87109 →

IT CORPORATION

IT ANALYTICAL SERVICES

WEST COAST TECHNICAL SERVICE DIVISION
17605 Fabrica Way • Cerritos, California 90701 • 213-921-9831

CERTIFICATE OF ANALYSIS

TO: EID State of New Mexico
P.O. Box 968
Santa Fe, N.M. 87504-0968
Attn: Devon Jercinovic

DATE REPORTED: January 19, 1984
PROJECT CODE: 28152/ykm
ORDER NUMBER: CONTRACT

RECEIVED
JAN 25 1984
GROUND WATER/HAZARDOUS WASTE BUREAU

One (1) soil sample labeled: #13

State of New Mexico - EID Sample 1-8312270910
Persons Station Composite sample 25-30'

The sample was analyzed for priority pollutants by gas chromatography, combined gas chromatography/mass spectrometry and by atomic absorption spectrometry. EPA-approved methods were used for all analyses. Results for organics are given in Table I and for inorganics in Table II.

#624, #625
BNA - methylene chloride
PCB - hexane.

Table I. Organics

Analyte	Concentration (ug/g)
Tetrachloroethylene	20
1,1,1-Trichloroethane	0.4
1,1-Dichloroethylene	TR<0.05
C_9-C_{15} Saturated aliphatic hydrocarbons	2000
C_8-C_{12} Unsaturated aliphatic hydrocarbons	2000
PCBs (as PCB-1260)	ND<0.04
Phenols	ND<0.04

ND - This analyte was not detected; the limit of detection for this analysis is less than the amount stated in the table above.

TR - Trace, this compound was present, but was below the level at which concentration could be determined.

Neil E. Spingarn, Ph.D.
Title Staff Chemist
Approved By

Accredited by the American Industrial Hygiene Association

Table II. Inorganics

Analyte	Concentration (ug/g)
Antimony	ND<100
Arsenic	2
Beryllium	ND<1
Cadmium	ND<0.4
Chromium	2.7
Copper	3.5
Lead	5.5
Mercury	ND<0.02
Nickel	4.7
Selenium	ND<0.2
Silver	ND<1
Thallium	ND<10
Zinc	13

ND - This analyte was not detected; the limit of detection for this analysis is less than the amount stated in the table above.

AnaCor
Laboratories

(505) 345-8964
7300 Jefferson St. NE
Albuquerque, NM 87109

CONFIDENTIAL!

Analytical and Environmental Services

To: PNM
Alvarado Square
Albuquerque, NM 87158-0085

Date: 13 October 1983
JV- 1088

Attention: Jody Plum

Analyte	Sample Id/Analytical Results A	B	Normal Detection Limits
PCB	<1.0 ppm	<1.0 ppm	1.0 mg/l
Oil & Grease	3.006 ppm	0.3978 ppm	0.1 mg/l
Trichloroethylene	282.0 ppm	2483.0 ppm	0.1 mg/l
Trichloroethane	2132.0 ppm	3810.0 ppm	0.1 mg/l

Reference: "Standard Methods for the Examination of Water and Wastewater", 15th Edition, APHA, N.Y., 1980 .

A – BURIED STORAGE TANK
B – DRAIN PIT INSIDE BUILDING
} PERKIN GENERATING STATION

An invoice for services is enclosed. Thank you for your consideration in contacting AnaCor Laboratories.

Sincerely,

Jennifer V. Smith, Ph.D.
Laboratory Director

Enclosure

ASSAIGAI
ANALYTICAL LABORATORIES, INC.

To: PNM
Alvarado Square
Albuquerque, NM 87158

Date: 24 February 1984

Attention: Jody Plum

Re: October 13, 1983 Laboratory Report

As requested by PNM these two samples labeled A and B were analyzed for a variety of compounds including trichloroethylene. Usuage of more rigourous techniques indicated the presence of tetrachloroethylene. Tetrachloroethylene was subsequently found to be the major chlorinated organic contaminant found in the soils.

Sincerely,

Jennifer V. Smith

Jennifer V. Smith, Ph.D.
Laboratory Director

7300 Jefferson, N.E. → Albuquerque, New Mexico 87109

(505) 345-8964
7300 Jefferson St. NE
Albuquerque, NM 87109

AnaCor Laboratories

Analytical and Environmental Services

To: PNM
Alvarado Square
Albuquerque, NM 87158

Date: 28 November 1983
JV- 1192 (Cont.)

Attention: Jody Plum

Analtye	Sample ID/Analytical Results			
	PS-5 15'	PS-4 90'	PS-5 90'	Tank
Trichloroethane	462.2 ppm			17274.0 ppm
Trichloroethylene	<0.01 ppm			<0.01 ppm
Tetrachloroethylene	1661.7 ppm			3562.4 ppm
Benzene	<0.01 ppm	<0.01 ppm	<0.01 ppm	<0.01 ppm
Toluene	<0.01 ppm	<0.01 ppm	<0.01 ppm	<0.01 ppm
Dichloroethane	<0.01 ppm	<0.01 ppm	<0.01 ppm	<0.01 ppm
Carbon Tetrachloride	<0.01 ppm	<0.01 ppm	<0.01 ppm	<0.01 ppm
1,2 Dichloroethane	<0.01 ppm	<0.01 ppm	<0.01 ppm	<0.01 ppm
1,1 Dichloroethylene	<0.01 ppm	<0.01 ppm	<0.01 ppm	<0.01 ppm

Normal Detection Limits:

Trichloroethane	0.01 mg/l	Dichloroethane	0.01 mg/l
Trichloroethylene	0.01 mg/l	Carbon Tetrachloride	0.01 mg/l
Tetrachloroethylene	0.01 mg/l	1,2 Dichloroethane	0.01 mg/l
Benzene	0.01 mg/l	1,1 Dichloroethylene	0.01 mg/l
Toluene	0.01 mg/l		

Reference: "Organic Analysis Using Gas Chromatography/Mass Spectrometery", 1979, Budde & Eichelberger, Ann Arbor Science.

An invoice for services is enclosed. Thank you for your consideration in contacting AnaCor Laboratories.

Sincerely,

Jennifer V. Smith, Ph.D.
Laboratory Director

Enclosure

RADIAN
CORPORATION

February 23, 1984

Mr. Kent Kantz
Public Service Company of New Mexico
Alvarado Square
Albuquerque, New Mexico 87158

Dear Mr. Kantz:

On February 15, I reported to you the results we obtained for the analysis of nine groundwater samples for volatile halocarbons. In addition to the quantitative data, I reported the presence of several compounds we identified but did not quantitate. At your request, we reviewed our chromatograms in order to quantitate as many compounds as possible. This request afforded us the opportunity to review our previously quantitative identifications. This letter is to report quantitation of the additional compounds and correct some qualitative identifications previously reported.

The major volatile halocarbons in the samples were 1,1-dichloroethene, 1,1,1-trichloroethane, and tetrachloroethylene. The concentrations of the latter two compounds were reported in my letter of February 15. The concentrations of 1,1-dichloroethene are listed on the attached table. In addition we found 6.8 μg/L methylene chloride, 4.5 μg/L 1,1-dichloroethane, and 3.7 μg/L trichloroethene in PSMW-A3.

After reviewing the chromatograms, I do not believe that chloroform or dichlorobenzenes were present as previously reported. The high levels of dichloroethene, trichloroethane, and tetrachloroethylene greatly complicated quantitative and qualitative analysis of your samples. I hope our initial qualitative identificatio did not cause undue concern or consternation.

Please feel free to contact me if any questions arise or if we can be of further service.

Sincerely,

J. Steven Gibson, Ph.D.
Manager, Organic Laboratory
Radian Analytical Services

JSG:lb

Attachment

8501 Mo-Pac Blvd. / P.O. Box 9948 / Austin, Texas 78766 (512) 454-4797

RADIAN CORPORATION

Concentration of 1,1-dichloroethene in Ground Water

SAMPLE	CONCENTRATION, μg/L
PSMW1-A3	665
PSMW1-B3	915
PSMW1-C3	882
Mean, PSMW1	820
PSMW2-A3	377
PSMW2-B3	350
PSMW2-C3	527
Mean, PSMW2	420
PSMW3-A3	1392
PSMW3-B3	1151
PSMW3-C3	1309
Mean, PSMW3	1280

RADIAN
CORPORATION

February 15, 1984

Mr. Kent Kantz
Public Service Co. of New Mexico
Alvarado Square
Albuquerque, New Mexico 87158

Dear Mr. Kantz:

Enclosed are the results for analyses we recently performed on groundwater samples. These analyses were performed according to EPA Method 601 (EPA-600/4-82-057, July, 1982). We used a Tracor Model 560 gas chromatograph equipped with a Hall electrolytic conductivity detector. Sample introduction was effected using the purge-and-trap technique.

Although we quantitated the two predominant compounds (1,1,1-trichloroethane, tetrachloroethylene), our use of EPA Method 601 allowed us to identify the presence of methylene chloride, 1,1-dichloroethylene, chloroform, trichloroethylene, and dichlorobenzene. Other volatile halocarbons may be present but at levels which are masked by the more plentiful compounds.

Feel free to contact me if I can answer any questions or if we can be of further service.

Sincerely,

J. Steven Gibson, Ph.D.
Manager, Organic Laboratory
Radian Analytical Services

JSG:lb

Enclosure

[illegible] Mo-Pac Blvd. / P.O. Box 9948, Austin, Texas 78766 (512)454-4797

RADIAN CORPORATION

Analysis of Groundwater for Volatile Halocarbons

Sample	Concentration, µg/L. 1,1,1-trichloroethane	tetrachloroethylene
PSMW1-A3	4960	1330
PSMW1-B3	5900	1190
PSMW1-C3	5620	1090
Mean, PSMW1	5490	1200
PSMW2-A3	4080	842
PSMW2-B3	4630	778
PSMW2-C3	4410	908
Mean, PSMW2	4370	843
PSMW3-A3	10,700	2460
PSMW3-B3	11,400	2360
PSMW3-C3	10,100	2130
Mean, PSMW3	10,700	2320

APPENDIX B

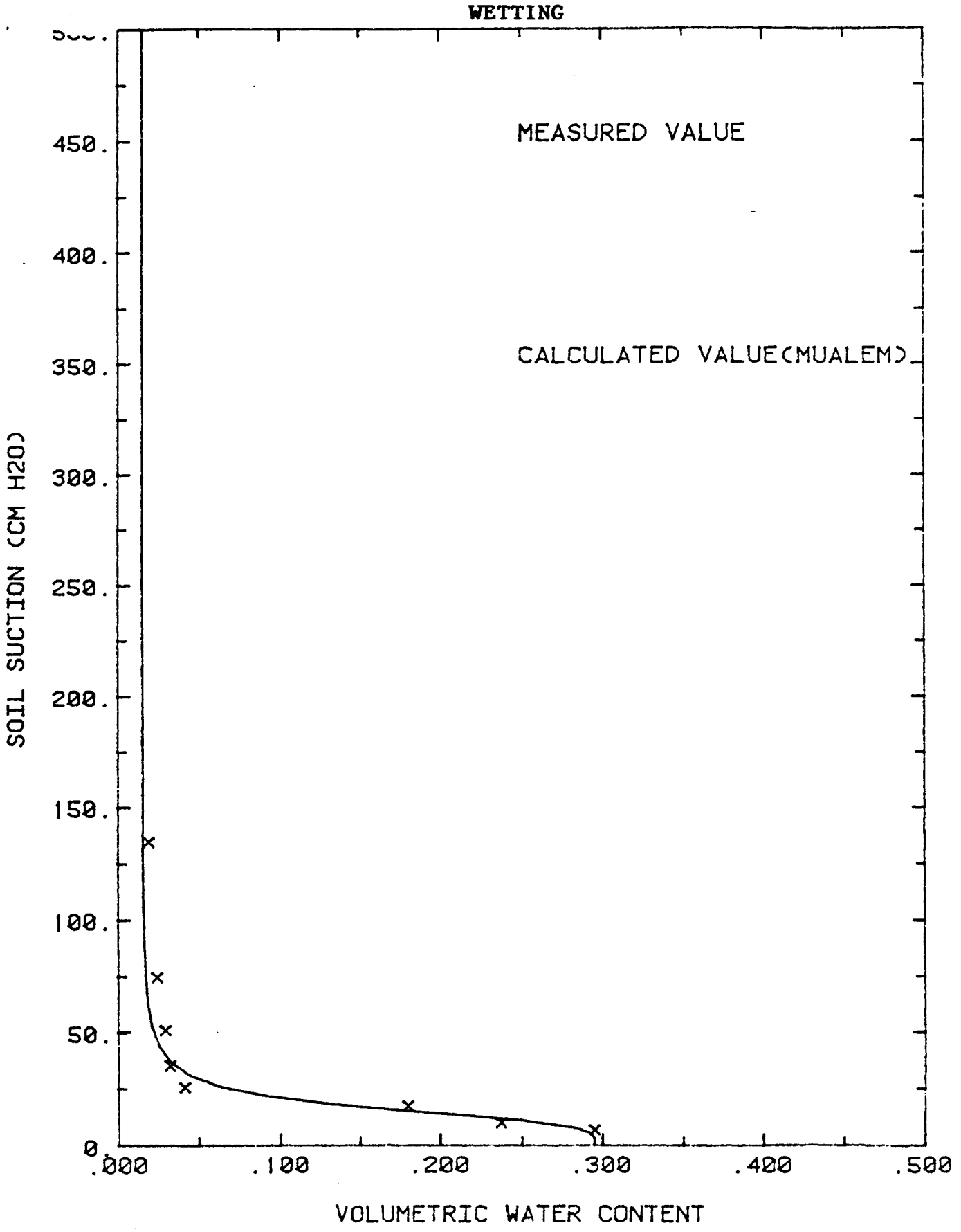
WETTING
MEASURED VALUE
CALCULATED VALUE(MUALEM)
SOIL SUCTION (CM H2O)
450.
400.
350.
300.
250.
200.
150.
100.
50.
0.
.000
.100
.200
.300
.400
.500
VOLUMETRIC WATER CONTENT

PS-4 25'

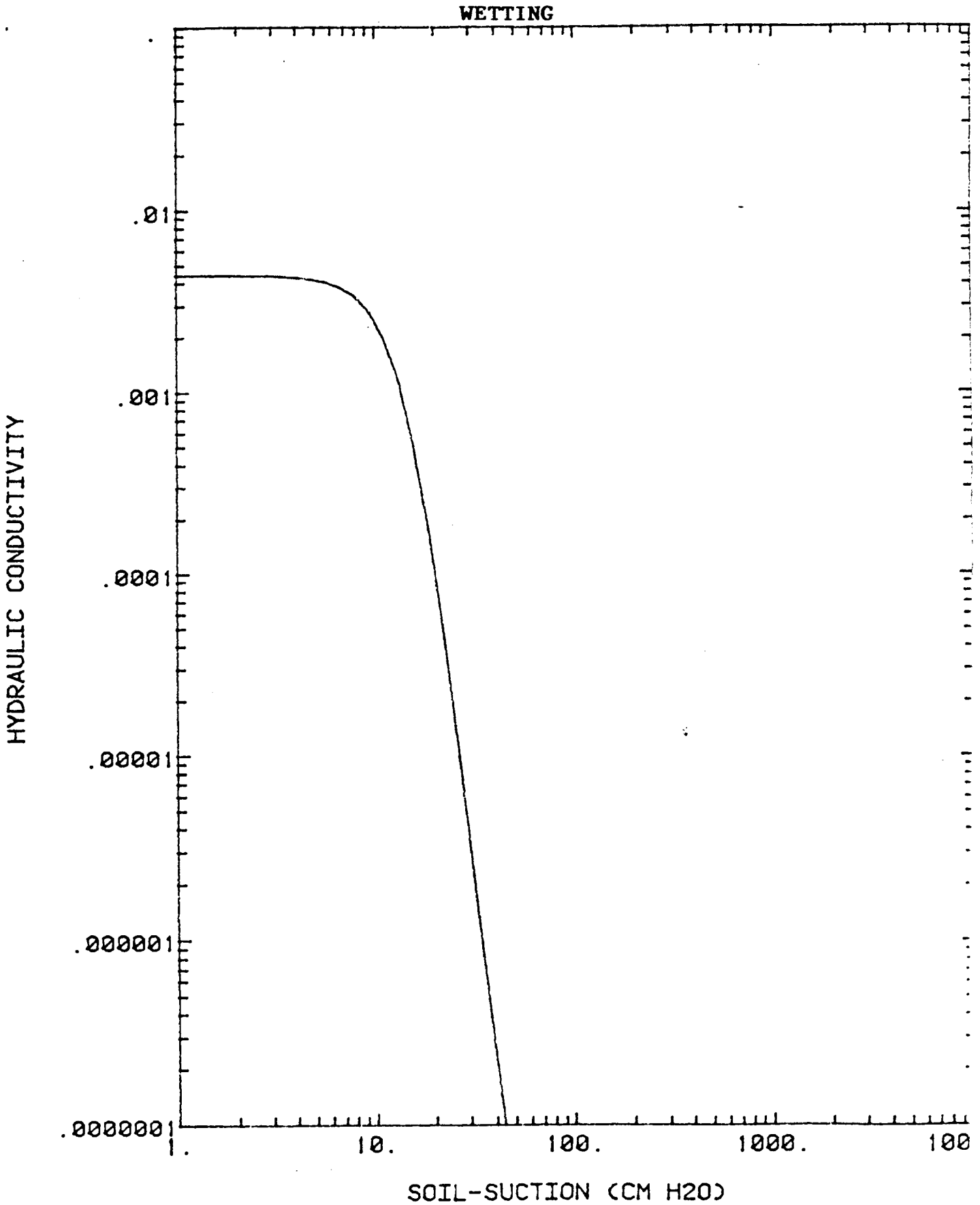
WETTING
HYDRAULIC CONDUCTIVITY
.01
.001
.0001
.00001
.000001
.000001
1.
10.
100.
1000.
100
SOIL-SUCTION (CM H2O)

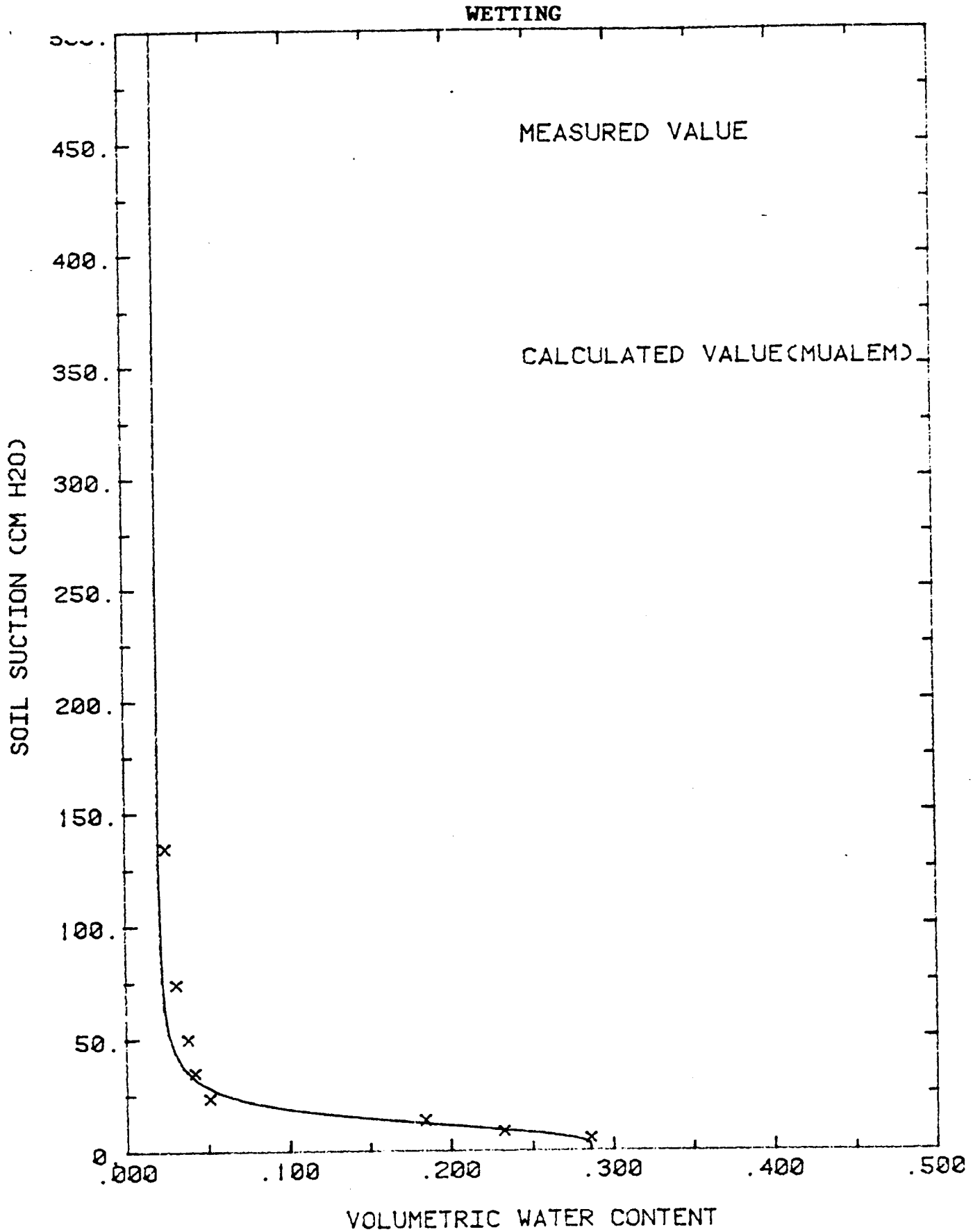
WETTING
MEASURED VALUE
CALCULATED VALUE(MUALEM)
SOIL SUCTION (CM H2O)
450.
400.
350.
300.
250.
200.
150.
100.
50.
0
.000
.100
.200
.300
.400
.500
VOLUMETRIC WATER CONTENT

PS-4 40'

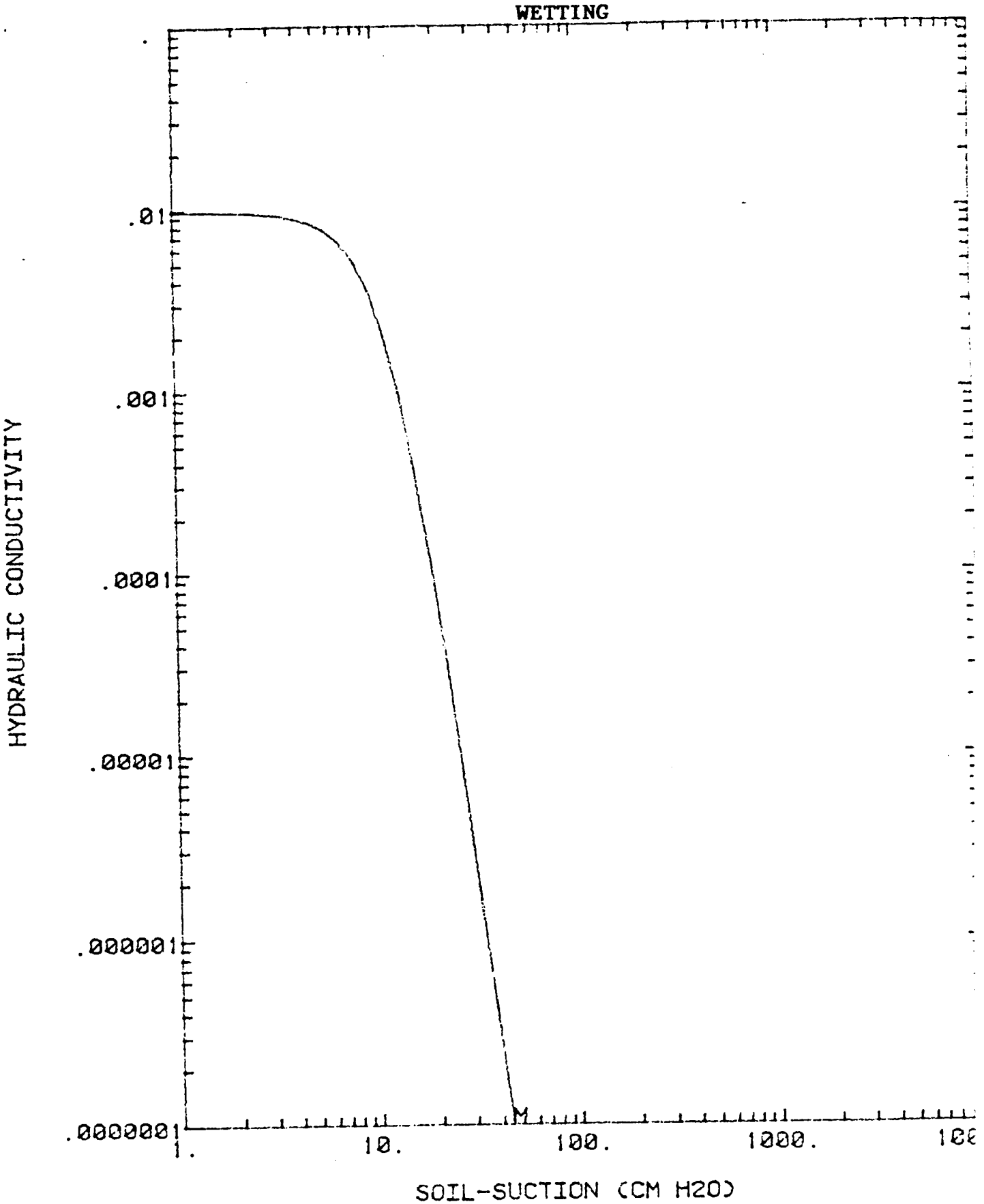
WETTING
HYDRAULIC CONDUCTIVITY
.01
.001
.0001
.00001
.000001
.0000001
1.
10.
100.
1000.
SOIL-SUCTION (CM H2O)

PS-4 40'

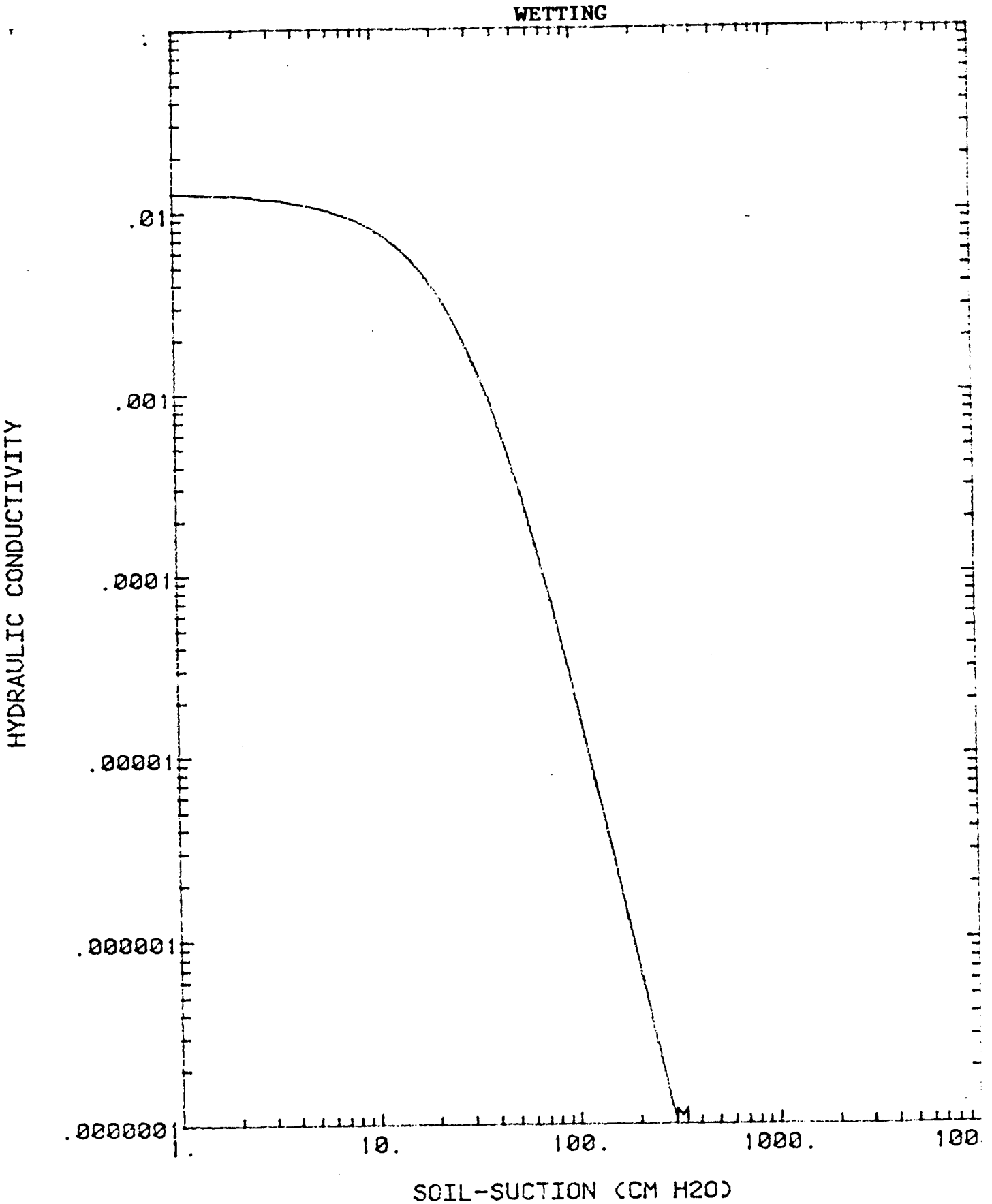
WETTING
HYDRAULIC CONDUCTIVITY
.01
.001
.0001
.00001
.000001
.0000001
1.
10.
100.
1000.
100
M
SOIL-SUCTION (CM H2O)

PS-4 25 7

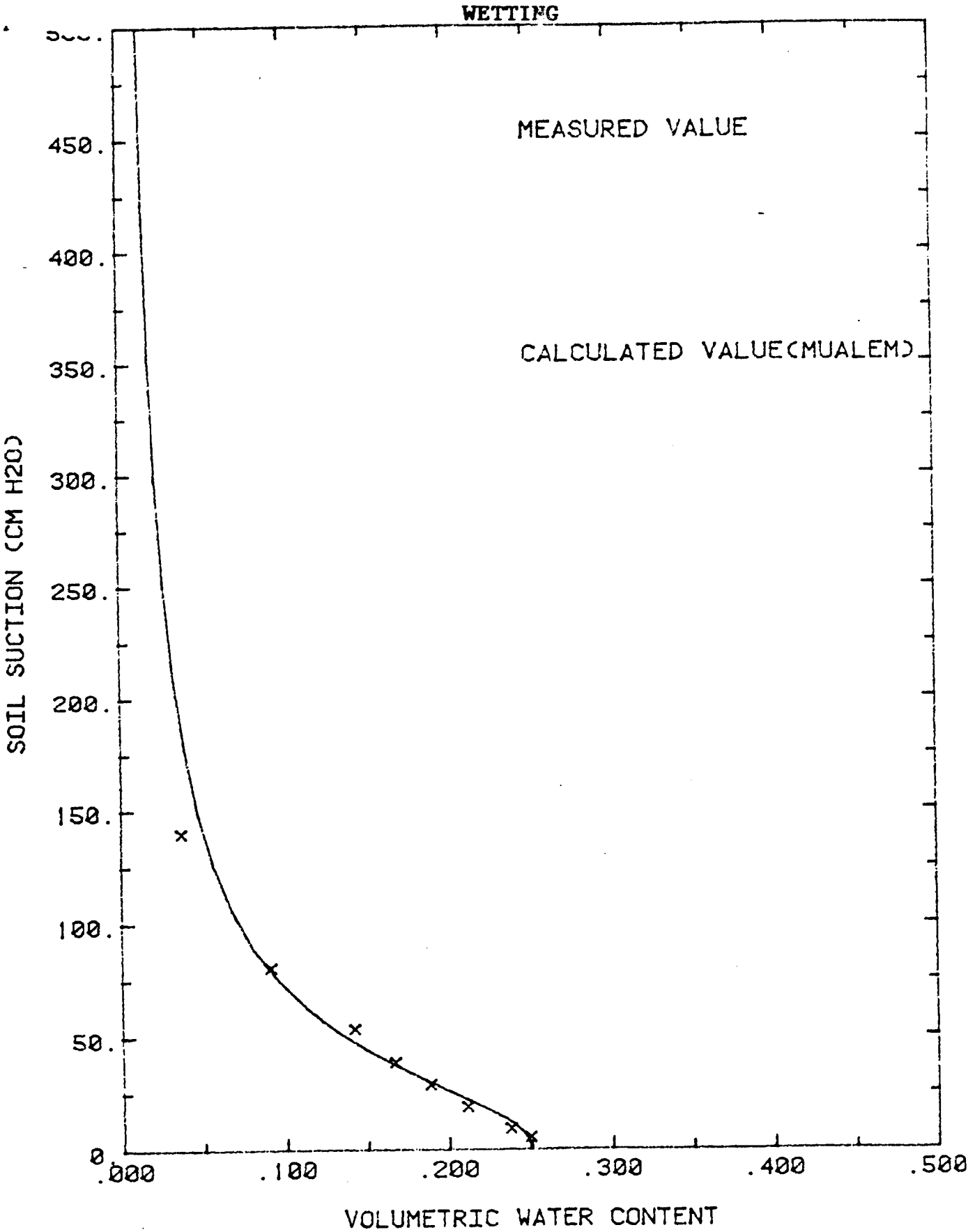
WETTING
MEASURED VALUE
CALCULATED VALUE(MUALEM)
SOIL SUCTION (CM H2O)
450.
400.
350.
300.
250.
200.
150.
100.
50.
0
.000
.100
.200
.300
.400
.500
VOLUMETRIC WATER CONTENT

PS-4 70'

Analytical **Technologies,** Inc.

2709-D Pan American Freeway, NE Albuquerque, NM 87107
Phone (505) 344-3777 FAX (505) 344-4413

ATI I.D. **407419**

August 15, 1994

Public Service Company of NM
Alvarado Square MS0408
Albuquerque, NM 87185

Project Name/Number: PERSON STATION (NONE)

Attention: Ron Johnson

On **07/28/94**, Analytical Technologies, Inc., (ADHS License No. AZ0015), received a request to analyze **non-aqueous** samples. The samples were analyzed with EPA methodology or equivalent methods. The results of these analyses and the quality control data, which follow each set of analyses, are enclosed.

If you have any questions or comments, please do not hesitate to contact us at (505) 344-3777.

Letitia Krakowski, Ph.D.
Project Manager

H. Mitchell Rubenstein, Ph.D.
Laboratory Manager

MR:jt

Enclosure

Analytical Technologies, Inc.

CLIENT : PUBLIC SERVICE COMPANY OF NM DATE RECEIVED : 07/28/94
PROJECT # : (NONE)
PROJECT NAME : PERSON STATION REPORT DATE : 08/15/94

ATI ID: 407419

ATI #	CLIENT DESCRIPTION	MATRIX	DATE COLLECTED
01	VEW-2	NON-AQ	07/28/94
02	VEW-4	NON-AQ	07/28/94
03	VEW-9	NON-AQ	07/28/94
04	VEW-14	NON-AQ	07/28/94
05	VEW-19	NON-AQ	07/28/94
06	VEW-24	NON-AQ	07/28/94
07	VEW-29	NON-AQ	07/28/94
08	VEW-34	NON-AQ	07/28/94
09	TRIP BLANK I	NON-AQ	07/27/94
10	VEW-39	NON-AQ	07/28/94
11	VEW-44A	NON-AQ	07/28/94
12	VEW-44B	NON-AQ	07/28/94
13	VEW-51	NON-AQ	07/28/94
14	VEW-54	NON-AQ	07/28/94
15	VEW-59	NON-AQ	07/28/94
16	VEW-64	NON-AQ	07/28/94
17	VEW-74	NON-AQ	07/28/94
18	VEW-79A	NON-AQ	07/28/94
19	VEW-79B	NON-AQ	07/28/94
20	VEW-84	NON-AQ	07/28/94
21	VEW-88	NON-AQ	07/28/94
22	VEW-94	NON-AQ	07/28/94
23	EQUP. BLANK	NON-AQ	07/28/94
24	VEW-100	NON-AQ	07/28/94
25	VEW-104	NON-AQ	07/28/94
26	VEW-109	NON-AQ	07/28/94
27	VEW-69	NON-AQ	07/28/94
28	VEW-35	NON-AQ	07/28/94
29	VEW-45	NON-AQ	07/28/94

---TOTALS---

MATRIX	#SAMPLES
NON-AQ	29

ATI STANDARD DISPOSAL PRACTICE

The samples from this project will be disposed of in thirty (30) days from the date of this report. If an extended storage period is required, please contact our sample control department before the scheduled disposal date.

Analytical Technologies, Inc.

GAS CHROMATOGRAPHY RESULTS

TEST : EPA 8015 MODIFIED
CLIENT : PUBLIC SERVICE COMPANY OF NM ATI I.D.: 407419
PROJECT # : (NONE)
PROJECT NAME : PERSON STATION

SAMPLE ID. #	CLIENT I.D.	MATRIX	DATE SAMPLED	DATE EXTRACTED	DATE ANALYZED	DIL. FACTOR
28	VEW-35	NON-AQ	07/28/94	07/29/94	08/01/94	10
29	VEW-45	NON-AQ	07/28/94	07/29/94	08/01/94	10

PARAMETER	UNITS	28	29
FUEL HYDROCARBONS	MG/KG	2200	3100
HYDROCARBON RANGE		C8-C32	C8-C32
HYDROCARBONS QUANTITATED USING		DIESEL	DIESEL
SURROGATE:			
O-TERPHENYL (%)		91	87

Note. 8015 method reports compounds in addition to chlorinated solvents (i.e., above ppm are in addition to ppm reported for PCE etc, PCE is not a part of the amount reported above)

Analytical Technologies, Inc.

GAS CHROMATOGRAPHY RESULTS

REAGENT BLANK

TEST	: EPA 8015 MODIFIED	ATI I.D.	: 407419
BLANK I.D.	: 072994B	MATRIX	: NON-AQ
CLIENT	: PUBLIC SERVICE COMPANY OF NM	DATE EXTRACTED	: 07/29/94
PROJECT #	: (NONE)	DATE ANALYZED	: 07/30/94
PROJECT NAME	: PERSON STATION	DILUTION FACTOR	: 1

PARAMETER	UNITS	
FUEL HYDROCARBONS	MG/KG	<5
HYDROCARBON RANGE		-
HYDROCARBONS QUANTITATED USING		-
SURROGATE:		
O-TERPHENYL (%)		107

Analytical Technologies, Inc.

GAS CHROMATOGRAPHY - QUALITY CONTROL

MSMSD

TEST	: EPA 8015 MODIFIED		
MSMSD #	: 40741607	ATI I.D.	: 407419
CLIENT	: PUBLIC SERVICE COMPANY OF NM	DATE EXTRACTED	: 07/29/94
PROJECT #	: (NONE)	DATE ANALYZED	: 07/31/94
PROJECT NAME	: PERSON STATION	SAMPLE MATRIX	: NON-AQ
REF. I.D.	: 40741607	UNITS	: MG/KG

PARAMETER	SAMPLE RESULT	CONC SPIKE	SPIKED SAMPLE	% REC	DUP SPIKE	DUP % REC	RPD
FUEL HYDROCARBONS	5.7	100	112	106	103	97	8

$$\% \text{ Recovery} = \frac{(\text{Spike Sample Result} - \text{Sample Result})}{\text{Spike Concentration}} \times 100$$

$$\text{RPD (Relative Percent Difference)} = \frac{(\text{Sample Result} - \text{Duplicate Result})}{\text{Average Result}} \times 100$$

Analytical Technologies, Inc.

GAS CHROMATOGRAPHY RESULTS

TEST : PURGEABLE HALOCARBONS/AROMATICS (EPA 8010/8020)
CLIENT : PUBLIC SERVICE COMPANY OF NM ATI I.D.: 407419
PROJECT # : (NONE)
PROJECT NAME : PERSON STATION

SAMPLE ID. #	CLIENT I.D.	MATRIX	DATE SAMPLED	DATE EXTRACTED	DATE ANALYZED	DIL. FACTOR
01	VEW-2	NON-AQ	07/28/94	07/28/94	08/10/94	50
02	VEW-4	NON-AQ	07/28/94	07/28/94	08/08/94	1
03	VEW-9	NON-AQ	07/28/94	07/28/94	08/08/94	1

PARAMETER	UNITS	01	02	03
BENZENE	MG/KG	<1.3	<0.025	<0.025
BROMODICHLOROMETHANE	MG/KG	<0.5	<0.010	<0.010
BROMOFORM	MG/KG	<0.5	<0.010	<0.010
BROMOMETHANE	MG/KG	<1.5	<0.030	<0.030
CARBON TETRACHLORIDE	MG/KG	<0.5	<0.010	<0.010
CHLOROBENZENE	MG/KG	<1.3	<0.025	<0.025
CHLOROETHANE	MG/KG	<1.3	<0.025	<0.025
CHLOROFORM	MG/KG	<3.0	<0.060	<0.060
CHLOROMETHANE	MG/KG	<1.3	<0.025	<0.025
DIBROMOCHLOROMETHANE	MG/KG	<0.5	<0.010	<0.010
1,2-DIBROMOETHANE (EDB)	MG/KG	<0.5	<0.010	<0.010
1,2-DICHLOROBENZENE	MG/KG	<1.3	<0.025	<0.025
1,3-DICHLOROBENZENE	MG/KG	<1.3	<0.025	<0.025
1,4-DICHLOROBENZENE	MG/KG	<1.3	<0.025	<0.025
1,1-DICHLOROETHANE	MG/KG	<0.5	<0.010	<0.010
1,2-DICHLOROETHANE (EDC)	MG/KG	<0.5	<0.010	<0.010
1,1-DICHLOROETHENE	MG/KG	<0.5	<0.010	<0.010
CIS-1,2-DICHLOROETHENE	MG/KG	<0.5	<0.010	<0.010
TRANS-1,2-DICHLOROETHENE	MG/KG	<0.5	<0.010	<0.010
1,2-DICHLOROPROPANE	MG/KG	<0.5	<0.010	<0.010
CIS-1,3-DICHLOROPROPENE	MG/KG	<0.5	<0.010	<0.010
TRANS-1,3-DICHLOROPROPENE	MG/KG	<0.5	<0.010	<0.010
ETHYLBENZENE	MG/KG	<1.3	<0.025	<0.025
METHYLENE CHLORIDE	MG/KG	<25	<0.50	<0.50
1,1,2,2-TETRACHLOROETHANE	MG/KG	<0.5	<0.010	<0.010
TETRACHLOROETHENE	MG/KG	32	0.59	0.75
TOLUENE	MG/KG	<1.3	<0.025	<0.025
1,1,1-TRICHLOROETHANE	MG/KG	<2.5	<0.050	<0.050
1,1,2-TRICHLOROETHANE	MG/KG	<0.5	<0.010	<0.010
TRICHLOROETHENE	MG/KG	<0.5	<0.010	<0.010
TRICHLOROFLUOROMETHANE	MG/KG	<0.5	<0.010	<0.010
VINYL CHLORIDE	MG/KG	<1.3	<0.025	<0.025
TOTAL XYLENES	MG/KG	<1.3	<0.025	<0.025
SURROGATES:				
BROMOCHLOROMETHANE (%)		98	85	77
TRIFLUOROTOLUENE (%)		100	95	102

Analytical Technologies, Inc.

GAS CHROMATOGRAPHY RESULTS

TEST : PURGEABLE HALOCARBONS/AROMATICS (EPA 8010/8020)
CLIENT : PUBLIC SERVICE COMPANY OF NM ATI I.D.: 407419
PROJECT # : (NONE)
PROJECT NAME : PERSON STATION

SAMPLE ID. #	CLIENT I.D.	MATRIX	DATE SAMPLED	DATE EXTRACTED	DATE ANALYZED	DIL. FACTOR
04	VEW-14	NON-AQ	07/28/94	07/28/94	08/09/94	50
05	VEW-19	NON-AQ	07/28/94	07/28/94	08/09/94	50
06	VEW-24	NON-AQ	07/28/94	07/28/94	08/09/94	50

PARAMETER	UNITS	04	05	06
BENZENE	MG/KG	<1.3	<1.3	<1.3
BROMODICHLOROMETHANE	MG/KG	<0.50	<0.50	<0.50
BROMOFORM	MG/KG	<0.50	<0.50	<0.50
BROMOMETHANE	MG/KG	<1.5	<1.5	<1.5
CARBON TETRACHLORIDE	MG/KG	<0.50	<0.50	<0.50
CHLOROBENZENE	MG/KG	<1.3	<1.3	<1.3
CHLOROETHANE	MG/KG	<1.3	<1.3	<1.3
CHLOROFORM	MG/KG	<3.0	<3.0	<3.0
CHLOROMETHANE	MG/KG	<1.3	<1.3	<1.3
DIBROMOCHLOROMETHANE	MG/KG	<0.50	<0.50	<0.50
1,2-DIBROMOETHANE (EDB)	MG/KG	<0.50	<0.50	<0.50
1,2-DICHLOROBENZENE	MG/KG	<1.3	<1.3	<1.3
1,3-DICHLOROBENZENE	MG/KG	<1.3	<1.3	<1.3
1,4-DICHLOROBENZENE	MG/KG	<1.3	<1.3	<1.3
1,1-DICHLOROETHANE	MG/KG	<0.50	<0.50	<0.50
1,2-DICHLOROETHANE (EDC)	MG/KG	<0.50	<0.50	<0.50
1,1-DICHLOROETHENE	MG/KG	<0.50	<0.50	<0.50
CIS-1,2-DICHLOROETHENE	MG/KG	<0.50	<0.50	<0.50
TRANS-1,2-DICHLOROETHENE	MG/KG	<0.50	<0.50	<0.50
1,2-DICHLOROPROPANE	MG/KG	<0.50	<0.50	<0.50
CIS-1,3-DICHLOROPROPENE	MG/KG	<0.50	<0.50	<0.50
TRANS-1,3-DICHLOROPROPENE	MG/KG	<0.50	<0.50	<0.50
ETHYLBENZENE	MG/KG	<1.3	<1.3	<1.3
METHYLENE CHLORIDE	MG/KG	<25	<25	<25
1,1,2,2-TETRACHLOROETHANE	MG/KG	<0.50	<0.50	<0.50
TETRACHLOROETHENE	MG/KG	47 D(100)	63 D(100)*	152 D(200)
TOLUENE	MG/KG	<1.3	<1.3	<1.3
1,1,1-TRICHLOROETHANE	MG/KG	<2.5	<2.5	<2.5
1,1,2-TRICHLOROETHANE	MG/KG	<0.50	<0.50	<0.50
TRICHLOROETHENE	MG/KG	<0.50	<0.50	<0.50
TRICHLOROFLUOROMETHANE	MG/KG	<0.50	<0.50	<0.50
VINYL CHLORIDE	MG/KG	<1.3	<1.3	<1.3
TOTAL XYLENES	MG/KG	<1.3	<1.3	<1.3

SURROGATES:			
BROMOCHLOROMETHANE (%)	107	98	98
TRIFLUOROTOLUENE (%)	94	108	108

D(100)=DILUTED 100X, ANALYZED 08/10/94
D(100)*=DILUTED 100X, ANALYZED 08/09/94
D(200)=DILUTED 200X, ANALYZED 08/10/94

Analytical Technologies, Inc.

GAS CHROMATOGRAPHY RESULTS

TEST : PURGEABLE HALOCARBONS/AROMATICS (EPA 8010/8020)
CLIENT : PUBLIC SERVICE COMPANY OF NM ATI I.D.: 407419
PROJECT # : (NONE)
PROJECT NAME : PERSON STATION

SAMPLE ID. #	CLIENT I.D.	MATRIX	DATE SAMPLED	DATE EXTRACTED	DATE ANALYZED	DIL. FACTOR
07	VEW-29	NON-AQ	07/28/94	07/28/94	08/09/94	50
08	VEW-34	NON-AQ	07/28/94	07/28/94	08/03/94	1
09	TRIP BLANK I	NON-AQ	07/27/94	07/27/94	08/10/94	1

PARAMETER	UNITS	07	08	09
BENZENE	MG/KG	<1.3	<0.025	<0.025
BROMODICHLOROMETHANE	MG/KG	<0.50	<0.010	<0.010
BROMOFORM	MG/KG	<0.50	<0.010	<0.010
BROMOMETHANE	MG/KG	<1.5	<0.030	<0.030
CARBON TETRACHLORIDE	MG/KG	<0.50	<0.010	<0.010
CHLOROBENZENE	MG/KG	<1.3	<0.025	<0.025
CHLOROETHANE	MG/KG	<1.3	<0.025	<0.025
CHLOROFORM	MG/KG	<3.0	<0.060	<0.060
CHLOROMETHANE	MG/KG	<1.3	<0.025	<0.025
DIBROMOCHLOROMETHANE	MG/KG	<0.50	<0.010	<0.010
1,2-DIBROMOETHANE (EDB)	MG/KG	<0.50	<0.010	<0.010
1,2-DICHLOROBENZENE	MG/KG	<1.3	<0.025	<0.025
1,3-DICHLOROBENZENE	MG/KG	<1.3	<0.025	<0.025
1,4-DICHLOROBENZENE	MG/KG	<1.3	<0.025	<0.025
1,1-DICHLOROETHANE	MG/KG	<0.50	<0.010	<0.010
1,2-DICHLOROETHANE (EDC)	MG/KG	<0.50	<0.010	<0.010
1,1-DICHLOROETHENE	MG/KG	<0.50	<0.010	<0.010
CIS-1,2-DICHLOROETHENE	MG/KG	<0.50	<0.010	<0.010
TRANS-1,2-DICHLOROETHENE	MG/KG	<0.50	<0.010	<0.010
1,2-DICHLOROPROPANE	MG/KG	<0.50	<0.010	<0.010
CIS-1,3-DICHLOROPROPENE	MG/KG	<0.50	<0.010	<0.010
TRANS-1,3-DICHLOROPROPENE	MG/KG	<0.50	<0.010	<0.010
ETHYLBENZENE	MG/KG	<1.3	<0.025	<0.025
METHYLENE CHLORIDE	MG/KG	<25	<0.50	<0.50
1,1,2,2-TETRACHLOROETHANE	MG/KG	<0.50	<0.010	<0.010
TETRACHLOROETHENE	MG/KG	860 D(1000)	320 D(1000)	<0.025
TOLUENE	MG/KG	<1.3	<0.025	<0.025
1,1,1-TRICHLOROETHANE	MG/KG	<2.5	2.1 D(50)	<0.050
1,1,2-TRICHLOROETHANE	MG/KG	<0.50	<0.010	<0.010
TRICHLOROETHENE	MG/KG	<0.50	0.04	<0.010
TRICHLOROFLUOROMETHANE	MG/KG	<0.50	<0.010	<0.010
VINYL CHLORIDE	MG/KG	<1.3	<0.025	<0.025
TOTAL XYLENES	MG/KG	2.9	<0.025	<0.025
SURROGATES:				
BROMOCHLOROMETHANE (%)		96	86	78
TRIFLUOROTOLUENE (%)		97	110	102

D(50)=DILUTED 50X, ANALYZED 08/09/94
D(1000)=DILUTED 1000X, ANALYZED 08/10/94

Analytical Technologies, Inc.

GAS CHROMATOGRAPHY RESULTS

TEST : PURGEABLE HALOCARBONS/AROMATICS (EPA 8010/8020)
CLIENT : PUBLIC SERVICE COMPANY OF NM ATI I.D.: 407419
PROJECT # : (NONE)
PROJECT NAME : PERSON STATION

SAMPLE ID. #	CLIENT I.D.	MATRIX	DATE SAMPLED	DATE EXTRACTED	DATE ANALYZED	DIL. FACTOR
10	VEW-39	NON-AQ	07/28/94	07/28/94	08/03/94	1
11	VEW-44A	NON-AQ	07/28/94	07/28/94	08/03/94	1
12	VEW-44B	NON-AQ	07/28/94	07/28/94	08/03/94	1

PARAMETER	UNITS	10	11	12
BENZENE	MG/KG	<1.3 D(50)	<1.3 D(50)	<1.3 D(50)
BROMODICHLOROMETHANE	MG/KG	<0.010	<0.010	<0.010
BROMOFORM	MG/KG	<0.010	<0.010	<0.010
BROMOMETHANE	MG/KG	<0.030	<0.030	<0.030
CARBON TETRACHLORIDE	MG/KG	<0.010	<0.010	<0.010
CHLOROBENZENE	MG/KG	<0.025	<0.025	<0.025
CHLOROETHANE	MG/KG	<0.025	<0.025	<0.025
CHLOROFORM	MG/KG	<0.060	<0.060	<0.060
CHLOROMETHANE	MG/KG	<0.025	<0.025	<0.025
DIBROMOCHLOROMETHANE	MG/KG	<0.010	<0.010	<0.010
1,2-DIBROMOETHANE (EDB)	MG/KG	<0.010	<0.010	<0.010
1,2-DICHLOROBENZENE	MG/KG	<0.025	<0.025	<0.025
1,3-DICHLOROBENZENE	MG/KG	<0.025	<0.025	<0.025
1,4-DICHLOROBENZENE	MG/KG	<0.025	<0.025	<0.025
1,1-DICHLOROETHANE	MG/KG	<0.010	<0.010	<0.010
1,2-DICHLOROETHANE (EDC)	MG/KG	<0.010	<0.010	<0.010
1,1-DICHLOROETHENE	MG/KG	<0.010	0.015	<0.010
CIS-1,2-DICHLOROETHENE	MG/KG	<0.010	<0.010	<0.010
TRANS-1,2-DICHLOROETHENE	MG/KG	<0.010	<0.010	<0.010
1,2-DICHLOROPROPANE	MG/KG	<0.010	<0.010	<0.010
CIS-1,3-DICHLOROPROPENE	MG/KG	<0.010	<0.010	<0.010
TRANS-1,3-DICHLOROPROPENE	MG/KG	<0.010	<0.010	<0.010
ETHYLBENZENE	MG/KG	<1.3 D(50)	<1.3 D(50)	<1.3 D(50)
METHYLENE CHLORIDE	MG/KG	<0.50	<0.50	<0.50
1,1,2,2-TETRACHLOROETHANE	MG/KG	<0.010	<0.010	<0.010
TETRACHLOROETHENE	MG/KG	880 D(2500)	430 (1000)	260 D(1000)
TOLUENE	MG/KG	<1.3 D(50)	<1.3 D(50)	<1.3 D(50)
1,1,1-TRICHLOROETHANE	MG/KG	5.1 D(50)	1.6 D(50)	0.99 D(50)
1,1,2-TRICHLOROETHANE	MG/KG	<0.010	<0.010	<0.010
TRICHLOROETHENE	MG/KG	0.058	0.041	0.018
TRICHLOROFLUOROMETHANE	MG/KG	<0.010	<0.010	<0.010
VINYL CHLORIDE	MG/KG	<0.025	<0.025	<0.025
TOTAL XYLENES	MG/KG	5.1 D(50)	1.4 D(50)	<1.3 D(50)
SURROGATES:				
BROMOCHLOROMETHANE (%)		81	81	83
TRIFLUOROTOLUENE (%)		87 D(50)	98 D(50)	101 D(50)

D(50)=DILUTED 50X, ANALYZED 08/09/94
D(2500)=DILUTED 2500X, ANALYZED 08/09/94
D(1000)=DILUTED 1000X, ANALYZED 08/10/94

Analytical Technologies, Inc.

GAS CHROMATOGRAPHY RESULTS

TEST : PURGEABLE HALOCARBONS/AROMATICS (EPA 8010/8020)
CLIENT : PUBLIC SERVICE COMPANY OF NM ATI I.D.: 407419
PROJECT # : (NONE)
PROJECT NAME: PERSON STATION

SAMPLE ID. #	CLIENT I.D.	MATRIX	DATE SAMPLED	DATE EXTRACTED	DATE ANALYZED	DIL. FACTOR
13	VEW-51	NON-AQ	07/28/94	07/28/94	08/03/94	1
14	VEW-54	NON-AQ	07/28/94	07/28/94	08/04/94	1
15	VEW-59	NON-AQ	07/28/94	07/28/94	08/04/94	1

PARAMETER	UNITS	13	14	15
BENZENE	MG/KG	<1.3 D(50)	<63 D(2500)	<0.025
BROMODICHLOROMETHANE	MG/KG	0.056	<0.010	<0.010
BROMOFORM	MG/KG	<0.010	<0.010	<0.010
BROMOMETHANE	MG/KG	<0.030	<0.030	<0.030
CARBON TETRACHLORIDE	MG/KG	<0.010	<0.010	<0.010
CHLOROBENZENE	MG/KG	<0.025	<0.025	<0.025
CHLOROETHANE	MG/KG	<0.025	<0.025	<0.025
CHLOROFORM	MG/KG	<0.060	<0.060	<0.060
CHLOROMETHANE	MG/KG	<0.025	<0.025	<0.025
DIBROMOCHLOROMETHANE	MG/KG	<0.010	<0.010	<0.010
1,2-DIBROMOETHANE (EDB)	MG/KG	<0.010	<0.010	<0.010
1,2-DICHLOROBENZENE	MG/KG	<0.025	<0.025	<0.025
1,3-DICHLOROBENZENE	MG/KG	<0.025	<0.025	<0.025
1,4-DICHLOROBENZENE	MG/KG	<0.025	<0.025	<0.025
1,1-DICHLOROETHANE	MG/KG	<0.010	<0.010	<0.010
1,2-DICHLOROETHANE (EDC)	MG/KG	<0.010	<0.010	<0.010
1,1-DICHLOROETHENE	MG/KG	0.014	<0.010	<0.010
CIS-1,2-DICHLOROETHENE	MG/KG	<0.010	<0.010	<0.010
TRANS-1,2-DICHLOROETHENE	MG/KG	<0.010	<0.010	<0.010
1,2-DICHLOROPROPANE	MG/KG	<0.010	<0.010	<0.010
CIS-1,3-DICHLOROPROPENE	MG/KG	<0.010	<0.010	<0.010
TRANS-1,3-DICHLOROPROPENE	MG/KG	<0.010	<0.010	<0.010
ETHYLBENZENE	MG/KG	<1.3 D(50)	<63 D(2500)	<0.025
METHYLENE CHLORIDE	MG/KG	<0.50	<0.50	<0.50
1,1,2,2-TETRACHLOROETHANE	MG/KG	<0.010	<0.010	<0.010
TETRACHLOROETHENE	MG/KG	660 D(2500)	210 D(2500)	340 D(2500)
TOLUENE	MG/KG	<1.3 D(50)	<63 D(2500)	<0.025
1,1,1-TRICHLOROETHANE	MG/KG	2.2 D(50)	0.45	<125 D(2500)
1,1,2-TRICHLOROETHANE	MG/KG	<0.010	<0.010	<0.010
TRICHLOROETHENE	MG/KG	0.013	<0.010	0.033
TRICHLOROFLUOROMETHANE	MG/KG	<0.010	<0.010	<0.010
VINYL CHLORIDE	MG/KG	<0.025	<0.025	<0.025
TOTAL XYLENES	MG/KG	1.3 D(50)	<63 D(2500)	<0.025

SURROGATES:			
BROMOCHLOROMETHANE (%)	86	85	100
TRIFLUOROTOLUENE (%)	101 D(50)	100 D(2500)	100

D(2500)=DILUTED 2500X, ANALYZED 08/10/94
D(50)=DILUTED 50X, ANALYZED 08/09/94

Analytical Technologies, Inc.

GAS CHROMATOGRAPHY RESULTS

TEST : PURGEABLE HALOCARBONS/AROMATICS (EPA 8010/8020)
CLIENT : PUBLIC SERVICE COMPANY OF NM ATI I.D.: 407419
PROJECT # : (NONE)
PROJECT NAME : PERSON STATION

SAMPLE ID. #	CLIENT I.D.	MATRIX	DATE SAMPLED	DATE EXTRACTED	DATE ANALYZED	DIL. FACTOR
16	VEW-64	NON-AQ	07/28/94	07/28/94	08/11/94	1
17	VEW-74	NON-AQ	07/28/94	07/28/94	08/10/94	1
18	VEW-79A	NON-AQ	07/28/94	07/28/94	08/08/94	1

PARAMETER	UNITS	16	17	18
BENZENE	MG/KG	<0.025	<0.025	<0.025
BROMODICHLOROMETHANE	MG/KG	<0.010	<0.010	<0.010
BROMOFORM	MG/KG	<0.010	<0.010	<0.010
BROMOMETHANE	MG/KG	<0.030	<0.030	<0.030
CARBON TETRACHLORIDE	MG/KG	<0.010	<0.010	<0.010
CHLOROBENZENE	MG/KG	<0.025	<0.025	<0.025
CHLOROETHANE	MG/KG	<0.025	<0.025	<0.025
CHLOROFORM	MG/KG	<0.060	<0.060	<0.060
CHLOROMETHANE	MG/KG	<0.025	<0.025	<0.025
DIBROMOCHLOROMETHANE	MG/KG	<0.010	<0.010	<0.010
1,2-DIBROMOETHANE (EDB)	MG/KG	<0.010	<0.010	<0.010
1,2-DICHLOROBENZENE	MG/KG	<0.025	<0.025	<0.025
1,3-DICHLOROBENZENE	MG/KG	<0.025	<0.025	<0.025
1,4-DICHLOROBENZENE	MG/KG	<0.025	<0.025	<0.025
1,1-DICHLOROETHANE	MG/KG	<0.010	<0.010	<0.010
1,2-DICHLOROETHANE (EDC)	MG/KG	<0.010	<0.010	<0.010
1,1-DICHLOROETHENE	MG/KG	<0.010	<0.010	<0.010
CIS-1,2-DICHLOROETHENE	MG/KG	<0.010	<0.010	<0.010
TRANS-1,2-DICHLOROETHENE	MG/KG	<0.010	<0.010	<0.010
1,2-DICHLOROPROPANE	MG/KG	<0.010	<0.010	<0.010
CIS-1,3-DICHLOROPROPENE	MG/KG	<0.010	<0.010	<0.010
TRANS-1,3-DICHLOROPROPENE	MG/KG	<0.010	<0.010	<0.010
ETHYLBENZENE	MG/KG	<0.025	<0.025	<0.025
METHYLENE CHLORIDE	MG/KG	<0.50	<0.50	<0.50
1,1,2,2-TETRACHLOROETHANE	MG/KG	<0.010	<0.010	<0.010
TETRACHLOROETHENE	MG/KG	1.1 D(5)	1.7 D(5)	0.081
TOLUENE	MG/KG	<0.025	0.026	<0.025
1,1,1-TRICHLOROETHANE	MG/KG	<0.050	<0.050	<0.050
1,1,2-TRICHLOROETHANE	MG/KG	<0.010	<0.010	<0.010
TRICHLOROETHENE	MG/KG	<0.010	<0.010	<0.010
TRICHLOROFLUOROMETHANE	MG/KG	<0.010	<0.010	<0.010
VINYL CHLORIDE	MG/KG	<0.025	<0.025	<0.025
TOTAL XYLENES	MG/KG	<0.025	<0.025	<0.025
SURROGATES:				
BROMOCHLOROMETHANE (%)		77	91	72
TRIFLUOROTOLUENE (%)		103	101	103

D(5)=DILUTED 5X, ANALYZED 08/11/94

Analytical Technologies, Inc.

GAS CHROMATOGRAPHY RESULTS

TEST : PURGEABLE HALOCARBONS/AROMATICS (EPA 8010/8020)
CLIENT : PUBLIC SERVICE COMPANY OF NM ATI I.D.: 407419
PROJECT # : (NONE)
PROJECT NAME : PERSON STATION

SAMPLE ID. #	CLIENT I.D.	MATRIX	DATE SAMPLED	DATE EXTRACTED	DATE ANALYZED	DIL. FACTOR
19	VEW-79B	NON-AQ	07/28/94	07/28/94	08/08/94	1
20	VEW-84	NON-AQ	07/28/94	07/28/94	08/08/94	1
21	VEW-88	NON-AQ	07/28/94	07/28/94	08/08/94	1

PARAMETER	UNITS	19	20	21
BENZENE	MG/KG	<0.025	<0.025	<0.025
BROMODICHLOROMETHANE	MG/KG	<0.010	<0.010	<0.010
BROMOFORM	MG/KG	<0.010	<0.010	<0.010
BROMOMETHANE	MG/KG	<0.030	<0.030	<0.030
CARBON TETRACHLORIDE	MG/KG	<0.010	<0.010	<0.010
CHLOROBENZENE	MG/KG	<0.025	<0.025	<0.025
CHLOROETHANE	MG/KG	<0.025	<0.025	<0.025
CHLOROFORM	MG/KG	<0.060	<0.060	<0.060
CHLOROMETHANE	MG/KG	<0.025	<0.025	<0.025
DIBROMOCHLOROMETHANE	MG/KG	<0.010	<0.010	<0.010
1,2-DIBROMOETHANE (EDB)	MG/KG	<0.010	<0.010	<0.010
1,2-DICHLOROBENZENE	MG/KG	<0.025	<0.025	<0.025
1,3-DICHLOROBENZENE	MG/KG	<0.025	<0.025	<0.025
1,4-DICHLOROBENZENE	MG/KG	<0.025	<0.025	<0.025
1,1-DICHLOROETHANE	MG/KG	<0.010	<0.010	<0.010
1,2-DICHLOROETHANE (EDC)	MG/KG	<0.010	<0.010	<0.010
1,1-DICHLOROETHENE	MG/KG	<0.010	<0.010	<0.010
CIS-1,2-DICHLOROETHENE	MG/KG	<0.010	<0.010	<0.010
TRANS-1,2-DICHLOROETHENE	MG/KG	<0.010	<0.010	<0.010
1,2-DICHLOROPROPANE	MG/KG	<0.010	<0.010	<0.010
CIS-1,3-DICHLOROPROPENE	MG/KG	<0.010	<0.010	<0.010
TRANS-1,3-DICHLOROPROPENE	MG/KG	<0.010	<0.010	<0.010
ETHYLBENZENE	MG/KG	<0.025	<0.025	<0.025
METHYLENE CHLORIDE	MG/KG	<0.50	<0.50	<0.50
1,1,2,2-TETRACHLOROETHANE	MG/KG	<0.010	<0.010	<0.010
TETRACHLOROETHENE	MG/KG	0.26	1.1 D(2)	0.16
TOLUENE	MG/KG	<0.025	<0.025	<0.025
1,1,1-TRICHLOROETHANE	MG/KG	<0.050	0.067	<0.050
1,1,2-TRICHLOROETHANE	MG/KG	<0.010	<0.010	<0.010
TRICHLOROETHENE	MG/KG	<0.010	<0.010	<0.010
TRICHLOROFLUOROMETHANE	MG/KG	0.012	<0.010	<0.010
VINYL CHLORIDE	MG/KG	<0.025	<0.025	<0.025
TOTAL XYLENES	MG/KG	<0.025	<0.025	<0.025

SURROGATES:

BROMOCHLOROMETHANE (%)	82	83	77
TRIFLUOROTOLUENE (%)	102	99	99

D(2)=DILUTED 2X, ANALYZED 08/10/94

Analytical Technologies, Inc.

GAS CHROMATOGRAPHY RESULTS

TEST : PURGEABLE HALOCARBONS/AROMATICS (EPA 8010/8020)
CLIENT : PUBLIC SERVICE COMPANY OF NM ATI I.D.: 407419
PROJECT # : (NONE)
PROJECT NAME : PERSON STATION

SAMPLE ID. #	CLIENT I.D.	MATRIX	DATE SAMPLED	DATE EXTRACTED	DATE ANALYZED	DIL. FACTOR
22	VEW-94	NON-AQ	07/28/94	07/28/94	08/08/94	1
23	EQUIP. BLANK	NON-AQ	07/28/94	07/28/94	08/10/94	1
24	VEW-100	NON-AQ	07/28/94	07/28/94	08/11/94	1

PARAMETER	UNITS	22	23	24
BENZENE	MG/KG	<0.025	<0.025	<0.025
BROMODICHLOROMETHANE	MG/KG	<0.010	<0.010	<0.010
BROMOFORM	MG/KG	<0.010	<0.010	<0.010
BROMOMETHANE	MG/KG	<0.030	<0.030	<0.030
CARBON TETRACHLORIDE	MG/KG	<0.010	<0.010	<0.010
CHLOROBENZENE	MG/KG	<0.025	<0.025	<0.025
CHLOROETHANE	MG/KG	<0.025	<0.025	<0.025
CHLOROFORM	MG/KG	<0.060	<0.060	<0.060
CHLOROMETHANE	MG/KG	<0.025	<0.025	<0.025
DIBROMOCHLOROMETHANE	MG/KG	<0.010	<0.010	<0.010
1,2-DIBROMOETHANE (EDB)	MG/KG	<0.010	<0.010	<0.010
1,2-DICHLOROBENZENE	MG/KG	<0.025	<0.025	<0.025
1,3-DICHLOROBENZENE	MG/KG	<0.025	<0.025	<0.025
1,4-DICHLOROBENZENE	MG/KG	<0.025	<0.025	<0.025
1,1-DICHLOROETHANE	MG/KG	<0.010	<0.010	<0.010
1,2-DICHLOROETHANE (EDC)	MG/KG	<0.010	<0.010	<0.010
1,1-DICHLOROETHENE	MG/KG	<0.010	<0.010	<0.010
CIS-1,2-DICHLOROETHENE	MG/KG	<0.010	<0.010	<0.010
TRANS-1,2-DICHLOROETHENE	MG/KG	<0.010	<0.010	<0.010
1,2-DICHLOROPROPANE	MG/KG	<0.010	<0.010	<0.010
CIS-1,3-DICHLOROPROPENE	MG/KG	<0.010	<0.010	<0.010
TRANS-1,3-DICHLOROPROPENE	MG/KG	<0.010	<0.010	<0.010
ETHYLBENZENE	MG/KG	<0.025	<0.025	<0.025
METHYLENE CHLORIDE	MG/KG	<0.50	<0.50	<0.50
1,1,2,2-TETRACHLOROETHANE	MG/KG	<0.010	<0.010	<0.010
TETRACHLOROETHENE	MG/KG	<0.025	<0.025	0.12
TOLUENE	MG/KG	<0.025	<0.025	<0.025
1,1,1-TRICHLOROETHANE	MG/KG	<0.050	<0.050	<0.050
1,1,2-TRICHLOROETHANE	MG/KG	<0.010	<0.010	<0.010
TRICHLOROETHENE	MG/KG	<0.010	<0.010	<0.010
TRICHLOROFLUOROMETHANE	MG/KG	<0.010	<0.010	<0.010
VINYL CHLORIDE	MG/KG	<0.025	<0.025	<0.025
TOTAL XYLENES	MG/KG	<0.025	<0.025	<0.025

SURROGATES:			
BROMOCHLOROMETHANE (%)	97	83	95
TRIFLUOROTOLUENE (%)	105	100	115

Analytical Technologies, Inc.

GAS CHROMATOGRAPHY RESULTS

TEST : PURGEABLE HALOCARBONS/AROMATICS (EPA 8010/8020)
CLIENT : PUBLIC SERVICE COMPANY OF NM ATI I.D.: 407419
PROJECT # : (NONE)
PROJECT NAME : PERSON STATION

SAMPLE ID. #	CLIENT I.D.	MATRIX	DATE SAMPLED	DATE EXTRACTED	DATE ANALYZED	DIL. FACTOR
25	VEW-104	NON-AQ	07/28/94	07/28/94	08/11/94	1
26	VEW-109	NON-AQ	07/28/94	07/28/94	08/11/94	1
27	VEW-69	NON-AQ	07/28/94	07/28/94	08/11/94	1

PARAMETER	UNITS	25	26	27
BENZENE	MG/KG	<0.025	<0.025	<0.025
BROMODICHLOROMETHANE	MG/KG	<0.010	<0.010	<0.010
BROMOFORM	MG/KG	<0.010	<0.010	<0.010
BROMOMETHANE	MG/KG	<0.030	<0.030	<0.030
CARBON TETRACHLORIDE	MG/KG	<0.010	<0.010	<0.010
CHLOROBENZENE	MG/KG	<0.025	<0.025	<0.025
CHLOROETHANE	MG/KG	<0.025	<0.025	<0.025
CHLOROFORM	MG/KG	<0.060	<0.060	<0.060
CHLOROMETHANE	MG/KG	<0.025	<0.025	<0.025
DIBROMOCHLOROMETHANE	MG/KG	<0.010	<0.010	<0.010
1,2-DIBROMOETHANE (EDB)	MG/KG	<0.010	<0.010	<0.010
1,2-DICHLOROBENZENE	MG/KG	<0.025	<0.025	<0.025
1,3-DICHLOROBENZENE	MG/KG	<0.025	<0.025	<0.025
1,4-DICHLOROBENZENE	MG/KG	<0.025	<0.025	<0.025
1,1-DICHLOROETHANE	MG/KG	<0.010	<0.010	<0.010
1,2-DICHLOROETHANE (EDC)	MG/KG	<0.010	<0.010	<0.010
1,1-DICHLOROETHENE	MG/KG	0.011	<0.010	<0.010
CIS-1,2-DICHLOROETHENE	MG/KG	<0.010	<0.010	<0.010
TRANS-1,2-DICHLOROETHENE	MG/KG	<0.010	<0.010	<0.010
1,2-DICHLOROPROPANE	MG/KG	<0.010	<0.010	<0.010
CIS-1,3-DICHLOROPROPENE	MG/KG	<0.010	<0.010	<0.010
TRANS-1,3-DICHLOROPROPENE	MG/KG	<0.010	<0.010	<0.010
ETHYLBENZENE	MG/KG	<0.025	<0.025	<0.025
METHYLENE CHLORIDE	MG/KG	<0.50	<0.50	<0.50
1,1,2,2-TETRACHLOROETHANE	MG/KG	<0.010	<0.010	<0.010
TETRACHLOROETHENE	MG/KG	0.75	0.52	0.89
TOLUENE	MG/KG	<0.025	<0.025	<0.025
1,1,1-TRICHLOROETHANE	MG/KG	<0.050	<0.050	<0.050
1,1,2-TRICHLOROETHANE	MG/KG	<0.010	<0.010	<0.010
TRICHLOROETHENE	MG/KG	<0.010	<0.010	<0.010
TRICHLOROFLUOROMETHANE	MG/KG	<0.010	<0.010	<0.010
VINYL CHLORIDE	MG/KG	<0.025	<0.025	<0.025
TOTAL XYLENES	MG/KG	<0.025	<0.025	<0.025

SURROGATES:

BROMOCHLOROMETHANE (%)	96	85	67
TRIFLUOROTOLUENE (%)	113	99	99

Analytical Technologies, Inc.

GAS CHROMATOGRAPHY RESULTS - QUALITY CONTROL

REAGENT BLANK

TEST	: EPA 8010/8020	ATI I.D.	: 407419
BLANK I.D.	: 080394	MATRIX	: NON-AQ
CLIENT	: PUBLIC SERVICE COMPANY OF NM	DATE EXTRACTED	: NA
PROJECT #	: (NONE)	DATE ANALYZED	: 08/03/94
PROJECT NAME	: PERSON STATION	DIL. FACTOR	: 1

PARAMETER	UNITS	
BENZENE	MG/KG	<0.025
BROMODICHLOROMETHANE	MG/KG	<0.010
BROMOFORM	MG/KG	<0.010
BROMOMETHANE	MG/KG	<0.030
CARBON TETRACHLORIDE	MG/KG	<0.010
CHLOROBENZENE	MG/KG	<0.025
CHLOROETHANE	MG/KG	<0.025
CHLOROFORM	MG/KG	<0.060
CHLOROMETHANE	MG/KG	<0.025
DIBROMOCHLOROMETHANE	MG/KG	<0.010
1,2-DIBROMOETHANE (EDB)	MG/KG	<0.010
1,2-DICHLOROBENZENE	MG/KG	<0.025
1,3-DICHLOROBENZENE	MG/KG	<0.025
1,4-DICHLOROBENZENE	MG/KG	<0.025
1,1-DICHLOROETHANE	MG/KG	<0.010
1,2-DICHLOROETHANE (EDC)	MG/KG	<0.010
1,1-DICHLOROETHENE	MG/KG	<0.010
CIS-1,2-DICHLOROETHENE	MG/KG	<0.010
TRANS-1,2-DICHLOROETHENE	MG/KG	<0.010
1,2-DICHLOROPROPANE	MG/KG	<0.010
CIS-1,3-DICHLOROPROPENE	MG/KG	<0.010
TRANS-1,3-DICHLOROPROPENE	MG/KG	<0.010
ETHYLBENZENE	MG/KG	<0.025
METHYLENE CHLORIDE	MG/KG	<0.50
1,1,2,2-TETRACHLOROETHANE	MG/KG	<0.010
TETRACHLOROETHENE	MG/KG	<0.025
TOLUENE	MG/KG	<0.025
1,1,1-TRICHLOROETHANE	MG/KG	<0.050
1,1,2-TRICHLOROETHANE	MG/KG	<0.010
TRICHLOROETHENE	MG/KG	<0.010
TRICHLOROFLUOROMETHANE	MG/KG	<0.010
VINYL CHLORIDE	MG/KG	<0.025
TOTAL XYLENES	MG/KG	<0.025

SURROGATES:	
BROMOCHLOROMETHANE (%)	100
TRIFLUOROTOLUENE (%)	100

Analytical Technologies, Inc.

GAS CHROMATOGRAPHY RESULTS - QUALITY CONTROL

REAGENT BLANK

TEST	: EPA 8010/8020	ATI I.D.	: 407419
BLANK I.D.	: 080494	MATRIX	: NON-AQ
CLIENT	: PUBLIC SERVICE COMPANY OF NM	DATE EXTRACTED	: NA
PROJECT #	: (NONE)	DATE ANALYZED	: 08/04/94
PROJECT NAME	: PERSON STATION	DIL. FACTOR	: 1

PARAMETER	UNITS	
BENZENE	MG/KG	<0.025
BROMODICHLOROMETHANE	MG/KG	<0.010
BROMOFORM	MG/KG	<0.010
BROMOMETHANE	MG/KG	<0.030
CARBON TETRACHLORIDE	MG/KG	<0.010
CHLOROBENZENE	MG/KG	<0.025
CHLOROETHANE	MG/KG	<0.025
CHLOROFORM	MG/KG	<0.060
CHLOROMETHANE	MG/KG	<0.025
DIBROMOCHLOROMETHANE	MG/KG	<0.010
1,2-DIBROMOETHANE (EDB)	MG/KG	<0.010
1,2-DICHLOROBENZENE	MG/KG	<0.025
1,3-DICHLOROBENZENE	MG/KG	<0.025
1,4-DICHLOROBENZENE	MG/KG	<0.025
1,1-DICHLOROETHANE	MG/KG	<0.010
1,2-DICHLOROETHANE (EDC)	MG/KG	<0.010
1,1-DICHLOROETHENE	MG/KG	<0.010
CIS-1,2-DICHLOROETHENE	MG/KG	<0.010
TRANS-1,2-DICHLOROETHENE	MG/KG	<0.010
1,2-DICHLOROPROPANE	MG/KG	<0.010
CIS-1,3-DICHLOROPROPENE	MG/KG	<0.010
TRANS-1,3-DICHLOROPROPENE	MG/KG	<0.010
ETHYLBENZENE	MG/KG	<0.025
METHYLENE CHLORIDE	MG/KG	<0.50
1,1,2,2-TETRACHLOROETHANE	MG/KG	<0.010
TETRACHLOROETHENE	MG/KG	<0.025
TOLUENE	MG/KG	<0.025
1,1,1-TRICHLOROETHANE	MG/KG	<0.050
1,1,2-TRICHLOROETHANE	MG/KG	<0.010
TRICHLOROETHENE	MG/KG	<0.010
TRICHLOROFLUOROMETHANE	MG/KG	<0.010
VINYL CHLORIDE	MG/KG	<0.025
TOTAL XYLENES	MG/KG	<0.025

SURROGATES:

BROMOCHLOROMETHANE (%)	100
TRIFLUOROTOLUENE (%)	64

Analytical Technologies, Inc.

GAS CHROMATOGRAPHY - QUALITY CONTROL

MSMSD

TEST	: PURGEABLE HALOCARBONS/AROMATICS (EPA 8010/8020)		
MSMSD #	: 40742103	ATI I.D.	: 407419
CLIENT	: PUBLIC SERVICE COMPANY OF NM	DATE EXTRACTED	: 07/29/94
PROJECT #	: (NONE)	DATE ANALYZED	: 08/12/94
PROJECT NAME	: PERSON STATION	SAMPLE MATRIX	: NON-AQ
REF. I.D.	: 40742103	UNITS	: MG/KG

PARAMETER	SAMPLE RESULT	CONC SPIKE	SPIKED SAMPLE	% REC	DUP SPIKE	DUP % REC	RPD
BENZENE	<0.025	0.50	0.59	118	0.58	116	2
CHLOROBENZENE	<0.025	0.50	0.56	112	0.57	114	2
1,1-DICHLOROETHENE	<0.010	0.50	0.53	106	0.49	98	8
TOLUENE	<0.025	0.50	0.60	120	0.61	122	2
TRICHLOROETHENE	<0.010	0.50	0.57	114	0.58	116	2

$$\% \text{ Recovery} = \frac{(\text{Spike Sample Result} - \text{Sample Result})}{\text{Spike Concentration}} \times 100$$

$$\text{RPD (Relative Percent Difference)} = \frac{(\text{Sample Result} - \text{Duplicate Result})}{\text{Average Result}} \times 100$$

Analytical Technologies, Inc.

GAS CHROMATOGRAPHY RESULTS - QUALITY CONTROL

REAGENT BLANK

TEST	: EPA 8010/8020	ATI I.D.	: 407419
BLANK I.D.	: 080794	MATRIX	: NON-AQ
CLIENT	: PUBLIC SERVICE COMPANY OF NM	DATE EXTRACTED	: NA
PROJECT #	: (NONE)	DATE ANALYZED	: 08/07/94
PROJECT NAME	: PERSON STATION	DIL. FACTOR	: 1

PARAMETER	UNITS	
BENZENE	MG/KG	<0.025
BROMODICHLOROMETHANE	MG/KG	<0.010
BROMOFORM	MG/KG	<0.010
BROMOMETHANE	MG/KG	<0.030
CARBON TETRACHLORIDE	MG/KG	<0.010
CHLOROBENZENE	MG/KG	<0.025
CHLOROETHANE	MG/KG	<0.025
CHLOROFORM	MG/KG	<0.060
CHLOROMETHANE	MG/KG	<0.025
DIBROMOCHLOROMETHANE	MG/KG	<0.010
1,2-DIBROMOETHANE (EDB)	MG/KG	<0.010
1,2-DICHLOROBENZENE	MG/KG	<0.025
1,3-DICHLOROBENZENE	MG/KG	<0.025
1,4-DICHLOROBENZENE	MG/KG	<0.025
1,1-DICHLOROETHANE	MG/KG	<0.010
1,2-DICHLOROETHANE (EDC)	MG/KG	<0.010
1,1-DICHLOROETHENE	MG/KG	<0.010
CIS-1,2-DICHLOROETHENE	MG/KG	<0.010
TRANS-1,2-DICHLOROETHENE	MG/KG	<0.010
1,2-DICHLOROPROPANE	MG/KG	<0.010
CIS-1,3-DICHLOROPROPENE	MG/KG	<0.010
TRANS-1,3-DICHLOROPROPENE	MG/KG	<0.010
ETHYLBENZENE	MG/KG	<0.025
METHYLENE CHLORIDE	MG/KG	<0.50
1,1,2,2-TETRACHLOROETHANE	MG/KG	<0.010
TETRACHLOROETHENE	MG/KG	<0.025
TOLUENE	MG/KG	<0.025
1,1,1-TRICHLOROETHANE	MG/KG	<0.050
1,1,2-TRICHLOROETHANE	MG/KG	<0.010
TRICHLOROETHENE	MG/KG	<0.010
TRICHLOROFLUOROMETHANE	MG/KG	<0.010
VINYL CHLORIDE	MG/KG	<0.025
TOTAL XYLENES	MG/KG	<0.025

SURROGATES:	
BROMOCHLOROMETHANE (%)	91
TRIFLUOROTOLUENE (%)	106

Analytical Technologies, Inc.

GAS CHROMATOGRAPHY RESULTS - QUALITY CONTROL

REAGENT BLANK

TEST	: EPA 8010/8020	ATI I.D.	: 407419
BLANK I.D.	: 080894A	MATRIX	: NON-AQ
CLIENT	: PUBLIC SERVICE COMPANY OF NM	DATE EXTRACTED	: NA
PROJECT #	: (NONE)	DATE ANALYZED	: 08/08/94
PROJECT NAME	: PERSON STATION	DIL. FACTOR	: 1

PARAMETER	UNITS	
BENZENE	MG/KG	<0.025
BROMODICHLOROMETHANE	MG/KG	<0.010
BROMOFORM	MG/KG	<0.010
BROMOMETHANE	MG/KG	<0.030
CARBON TETRACHLORIDE	MG/KG	<0.010
CHLOROBENZENE	MG/KG	<0.025
CHLOROETHANE	MG/KG	<0.025
CHLOROFORM	MG/KG	<0.060
CHLOROMETHANE	MG/KG	<0.025
DIBROMOCHLOROMETHANE	MG/KG	<0.010
1,2-DIBROMOETHANE (EDB)	MG/KG	<0.010
1,2-DICHLOROBENZENE	MG/KG	<0.025
1,3-DICHLOROBENZENE	MG/KG	<0.025
1,4-DICHLOROBENZENE	MG/KG	<0.025
1,1-DICHLOROETHANE	MG/KG	<0.010
1,2-DICHLOROETHANE (EDC)	MG/KG	<0.010
1,1-DICHLOROETHENE	MG/KG	<0.010
CIS-1,2-DICHLOROETHENE	MG/KG	<0.010
TRANS-1,2-DICHLOROETHENE	MG/KG	<0.010
1,2-DICHLOROPROPANE	MG/KG	<0.010
CIS-1,3-DICHLOROPROPENE	MG/KG	<0.010
TRANS-1,3-DICHLOROPROPENE	MG/KG	<0.010
ETHYLBENZENE	MG/KG	<0.025
METHYLENE CHLORIDE	MG/KG	<0.50
1,1,2,2-TETRACHLOROETHANE	MG/KG	<0.010
TETRACHLOROETHENE	MG/KG	<0.025
TOLUENE	MG/KG	<0.025
1,1,1-TRICHLOROETHANE	MG/KG	<0.050
1,1,2-TRICHLOROETHANE	MG/KG	<0.010
TRICHLOROETHENE	MG/KG	<0.010
TRICHLOROFLUOROMETHANE	MG/KG	<0.010
VINYL CHLORIDE	MG/KG	<0.025
TOTAL XYLENES	MG/KG	<0.025

SURROGATES:	
BROMOCHLOROMETHANE (%)	101
TRIFLUOROTOLUENE (%)	111

Analytical Technologies, Inc.

GAS CHROMATOGRAPHY RESULTS - QUALITY CONTROL

REAGENT BLANK

TEST	: EPA 8010/8020	ATI I.D.	: 407419
BLANK I.D.	: 080894B	MATRIX	: NON-AQ
CLIENT	: PUBLIC SERVICE COMPANY OF NM	DATE EXTRACTED	: NA
PROJECT #	: (NONE)	DATE ANALYZED	: 08/08/94
PROJECT NAME	: PERSON STATION	DIL. FACTOR	: 1

PARAMETER	UNITS	
BENZENE	MG/KG	<0.025
BROMODICHLOROMETHANE	MG/KG	<0.010
BROMOFORM	MG/KG	<0.010
BROMOMETHANE	MG/KG	<0.030
CARBON TETRACHLORIDE	MG/KG	<0.010
CHLOROBENZENE	MG/KG	<0.025
CHLOROETHANE	MG/KG	<0.025
CHLOROFORM	MG/KG	<0.060
CHLOROMETHANE	MG/KG	<0.025
DIBROMOCHLOROMETHANE	MG/KG	<0.010
1,2-DIBROMOETHANE (EDB)	MG/KG	<0.010
1,2-DICHLOROBENZENE	MG/KG	<0.025
1,3-DICHLOROBENZENE	MG/KG	<0.025
1,4-DICHLOROBENZENE	MG/KG	<0.025
1,1-DICHLOROETHANE	MG/KG	<0.010
1,2-DICHLOROETHANE (EDC)	MG/KG	<0.010
1,1-DICHLOROETHENE	MG/KG	<0.010
CIS-1,2-DICHLOROETHENE	MG/KG	<0.010
TRANS-1,2-DICHLOROETHENE	MG/KG	<0.010
1,2-DICHLOROPROPANE	MG/KG	<0.010
CIS-1,3-DICHLOROPROPENE	MG/KG	<0.010
TRANS-1,3-DICHLOROPROPENE	MG/KG	<0.010
ETHYLBENZENE	MG/KG	<0.025
METHYLENE CHLORIDE	MG/KG	<0.50
1,1,2,2-TETRACHLOROETHANE	MG/KG	<0.010
TETRACHLOROETHENE	MG/KG	0.030
TOLUENE	MG/KG	<0.025
1,1,1-TRICHLOROETHANE	MG/KG	<0.050
1,1,2-TRICHLOROETHANE	MG/KG	<0.010
TRICHLOROETHENE	MG/KG	<0.010
TRICHLOROFLUOROMETHANE	MG/KG	<0.010
VINYL CHLORIDE	MG/KG	<0.025
TOTAL XYLENES	MG/KG	<0.025

SURROGATES:	
BROMOCHLOROMETHANE (%)	96
TRIFLUOROTOLUENE (%)	104

Analytical Technologies, Inc.

2709-D Pan American Freeway, NE Albuquerque, NM 87107
Phone (505) 344-3777 FAX (505) 344-4413

ATI I.D. 407421

August 16, 1994

Public Service Company of NM
Alvarado Square-MS 0408
Albuquerque, NM 87158

Project Name/Number: PERSON STATION

Attention: Ron Johnson

On 07/29/94, Analytical Technologies, Inc., (ADHS License No. AZ0015), received a request to analyze non-aqueous samples. The samples were analyzed with EPA methodology or equivalent methods. The results of these analyses and the quality control data, which follow each set of analyses, are enclosed.

If you have any questions or comments, please do not hesitate to contact us at (505) 344-3777.

Letitia Krakowski, Ph.D.
Project Manager

H. Mitchell Rubenstein, Ph.D.
Laboratory Manager

MR:jt

Enclosure

Analytical Technologies, Inc.

CLIENT : PUBLIC SERVICE COMPANY OF NM DATE RECEIVED : 07/29/94
PROJECT # : (NONE)
PROJECT NAME : PERSON STATION REPORT DATE : 08/16/94

ATI ID: 407421

ATI #	CLIENT DESCRIPTION	MATRIX	DATE COLLECTED
01	VEW-114	NON-AQ	07/29/94
02	VEW-119	NON-AQ	07/29/94
03	VEW-124	NON-AQ	07/29/94
04	VEW-129	NON-AQ	07/29/94
05	VEW-134	NON-AQ	07/29/94
06	TRIP BLANK	NON-AQ	07/27/94

---TOTALS---

MATRIX	#SAMPLES
NON-AQ	6

ATI STANDARD DISPOSAL PRACTICE

The samples from this project will be disposed of in thirty (30) days from the date of this report. If an extended storage period is required, please contact our sample control department before the scheduled disposal date.

Analytical Technologies, Inc.

GAS CHROMATOGRAPHY RESULTS

TEST : PURGEABLE HALOCARBONS/AROMATICS (EPA 8010/8020)
CLIENT : PUBLIC SERVICE COMPANY OF NM ATI I.D.: 407421
PROJECT # : (NONE)
PROJECT NAME : PERSON STATION

SAMPLE ID. #	CLIENT I.D.	MATRIX	DATE SAMPLED	DATE EXTRACTED	DATE ANALYZED	DIL. FACTOR
01	VEW-114	NON-AQ	07/29/94	07/29/94	08/12/94	1
02	VEW-119	NON-AQ	07/29/94	07/29/94	08/12/94	1
03	VEW-124	NON-AQ	07/29/94	07/29/94	08/12/94	1

PARAMETER	UNITS	01	02	03
BENZENE	MG/KG	<0.025	<0.025	<0.025
BROMODICHLOROMETHANE	MG/KG	<0.010	<0.010	<0.010
BROMOFORM	MG/KG	<0.010	<0.010	<0.010
BROMOMETHANE	MG/KG	<0.030	<0.030	<0.030
CARBON TETRACHLORIDE	MG/KG	<0.010	<0.010	<0.010
CHLOROBENZENE	MG/KG	<0.025	<0.025	<0.025
CHLOROETHANE	MG/KG	<0.025	<0.025	<0.025
CHLOROFORM	MG/KG	<0.060	<0.060	<0.060
CHLOROMETHANE	MG/KG	<0.025	<0.025	<0.025
DIBROMOCHLOROMETHANE	MG/KG	<0.010	<0.010	<0.010
1,2-DIBROMOETHANE (EDB)	MG/KG	<0.010	<0.010	<0.010
1,2-DICHLOROBENZENE	MG/KG	<0.025	<0.025	<0.025
1,3-DICHLOROBENZENE	MG/KG	<0.025	<0.025	<0.025
1,4-DICHLOROBENZENE	MG/KG	<0.025	<0.025	<0.025
1,1-DICHLOROETHANE	MG/KG	<0.010	<0.010	<0.010
1,2-DICHLOROETHANE (EDC)	MG/KG	<0.010	<0.010	<0.010
1,1-DICHLOROETHENE	MG/KG	<0.010	<0.010	<0.010
CIS-1,2-DICHLOROETHENE	MG/KG	<0.010	<0.010	<0.010
TRANS-1,2-DICHLOROETHENE	MG/KG	<0.010	<0.010	<0.010
1,2-DICHLOROPROPANE	MG/KG	<0.010	<0.010	<0.010
CIS-1,3-DICHLOROPROPENE	MG/KG	<0.010	<0.010	<0.010
TRANS-1,3-DICHLOROPROPENE	MG/KG	<0.010	<0.010	<0.010
ETHYLBENZENE	MG/KG	<0.025	<0.025	<0.025
METHYLENE CHLORIDE	MG/KG	<0.50	<0.50	<0.50
1,1,2,2-TETRACHLOROETHANE	MG/KG	<0.010	<0.010	<0.010
TETRACHLOROETHENE	MG/KG	0.042	0.036	<0.025
TOLUENE	MG/KG	<0.025	<0.025	<0.025
1,1,1-TRICHLOROETHANE	MG/KG	<0.050	<0.050	<0.050
1,1,2-TRICHLOROETHANE	MG/KG	<0.010	<0.010	<0.010
TRICHLOROETHENE	MG/KG	<0.010	<0.010	<0.010
TRICHLOROFLUOROMETHANE	MG/KG	<0.010	<0.010	<0.010
VINYL CHLORIDE	MG/KG	<0.025	<0.025	<0.025
TOTAL XYLENES	MG/KG	<0.025	<0.025	<0.025

SURROGATES:			
BROMOCHLOROMETHANE (%)	85	88	75
TRIFLUOROTOLUENE (%)	114	116	109

Analytical Technologies, Inc.

GAS CHROMATOGRAPHY RESULTS

TEST : PURGEABLE HALOCARBONS/AROMATICS (EPA 8010/8020)
CLIENT : PUBLIC SERVICE COMPANY OF NM ATI I.D.: 407421
PROJECT # : (NONE)
PROJECT NAME : PERSON STATION

SAMPLE ID. #	CLIENT I.D.	MATRIX	DATE SAMPLED	DATE EXTRACTED	DATE ANALYZED	DIL. FACTOR
04	VEW-129	NON-AQ	07/29/94	07/29/94	08/12/94	1
05	VEW-134	NON-AQ	07/29/94	07/29/94	08/12/94	1
06	TRIP BLANK	NON-AQ	07/27/94	07/27/94	08/12/94	1

PARAMETER	UNITS	04	05	06
BENZENE	MG/KG	<0.025	<0.025	<0.025
BROMODICHLOROMETHANE	MG/KG	<0.010	<0.010	<0.010
BROMOFORM	MG/KG	<0.010	<0.010	<0.010
BROMOMETHANE	MG/KG	<0.030	<0.030	<0.030
CARBON TETRACHLORIDE	MG/KG	<0.010	<0.010	<0.010
CHLOROBENZENE	MG/KG	<0.025	<0.025	<0.025
CHLOROETHANE	MG/KG	<0.025	<0.025	<0.025
CHLOROFORM	MG/KG	<0.060	<0.060	<0.060
CHLOROMETHANE	MG/KG	<0.025	<0.025	<0.025
DIBROMOCHLOROMETHANE	MG/KG	<0.010	<0.010	<0.010
1,2-DIBROMOETHANE (EDB)	MG/KG	<0.010	<0.010	<0.010
1,2-DICHLOROBENZENE	MG/KG	<0.025	<0.025	<0.025
1,3-DICHLOROBENZENE	MG/KG	<0.025	<0.025	<0.025
1,4-DICHLOROBENZENE	MG/KG	<0.025	<0.025	<0.025
1,1-DICHLOROETHANE	MG/KG	<0.010	<0.010	<0.010
1,2-DICHLOROETHANE (EDC)	MG/KG	<0.010	<0.010	<0.010
1,1-DICHLOROETHENE	MG/KG	<0.010	<0.010	<0.010
CIS-1,2-DICHLOROETHENE	MG/KG	<0.010	<0.010	<0.010
TRANS-1,2-DICHLOROETHENE	MG/KG	<0.010	<0.010	<0.010
1,2-DICHLOROPROPANE	MG/KG	<0.010	<0.010	<0.010
CIS-1,3-DICHLOROPROPENE	MG/KG	<0.010	<0.010	<0.010
TRANS-1,3-DICHLOROPROPENE	MG/KG	<0.010	<0.010	<0.010
ETHYLBENZENE	MG/KG	<0.025	<0.025	<0.025
METHYLENE CHLORIDE	MG/KG	<0.50	<0.50	<0.50
1,1,2,2-TETRACHLOROETHANE	MG/KG	<0.010	<0.010	<0.010
TETRACHLOROETHENE	MG/KG	0.11	0.049	<0.025
TOLUENE	MG/KG	<0.025	<0.025	<0.025
1,1,1-TRICHLOROETHANE	MG/KG	<0.050	<0.050	<0.050
1,1,2-TRICHLOROETHANE	MG/KG	<0.010	<0.010	<0.010
TRICHLOROETHENE	MG/KG	<0.010	<0.010	<0.010
TRICHLOROFLUOROMETHANE	MG/KG	<0.010	<0.010	<0.010
VINYL CHLORIDE	MG/KG	<0.025	<0.025	<0.025
TOTAL XYLENES	MG/KG	<0.025	<0.025	<0.025

SURROGATES:			
BROMOCHLOROMETHANE (%)	72	72	90
TRIFLUOROTOLUENE (%)	109	109	107

Analytical Technologies, Inc.

GAS CHROMATOGRAPHY RESULTS - QUALITY CONTROL

REAGENT BLANK

TEST	: EPA 8010/8020	ATI I.D.	: 407421
BLANK I.D.	: 081194B	MATRIX	: NON-AQ
CLIENT	: PUBLIC SERVICE COMPANY OF NM	DATE EXTRACTED	: NA
PROJECT #	: (NONE)	DATE ANALYZED	: 08/11/94
PROJECT NAME	: PERSON STATION	DIL. FACTOR	: 1

PARAMETER	UNITS	
BENZENE	MG/KG	<0.025
BROMODICHLOROMETHANE	MG/KG	<0.010
BROMOFORM	MG/KG	<0.010
BROMOMETHANE	MG/KG	<0.030
CARBON TETRACHLORIDE	MG/KG	<0.010
CHLOROBENZENE	MG/KG	<0.025
CHLOROETHANE	MG/KG	<0.025
CHLOROFORM	MG/KG	<0.060
CHLOROMETHANE	MG/KG	<0.025
DIBROMOCHLOROMETHANE	MG/KG	<0.010
1,2-DIBROMOETHANE (EDB)	MG/KG	<0.010
1,2-DICHLOROBENZENE	MG/KG	<0.025
1,3-DICHLOROBENZENE	MG/KG	<0.025
1,4-DICHLOROBENZENE	MG/KG	<0.025
1,1-DICHLOROETHANE	MG/KG	<0.010
1,2-DICHLOROETHANE (EDC)	MG/KG	<0.010
1,1-DICHLOROETHENE	MG/KG	<0.010
CIS-1,2-DICHLOROETHENE	MG/KG	<0.010
TRANS-1,2-DICHLOROETHENE	MG/KG	<0.010
1,2-DICHLOROPROPANE	MG/KG	<0.010
CIS-1,3-DICHLOROPROPENE	MG/KG	<0.010
TRANS-1,3-DICHLOROPROPENE	MG/KG	<0.010
ETHYLBENZENE	MG/KG	<0.025
METHYLENE CHLORIDE	MG/KG	<0.50
1,1,2,2-TETRACHLOROETHANE	MG/KG	<0.010
TETRACHLOROETHENE	MG/KG	<0.025
TOLUENE	MG/KG	<0.025
1,1,1-TRICHLOROETHANE	MG/KG	<0.050
1,1,2-TRICHLOROETHANE	MG/KG	<0.010
TRICHLOROETHENE	MG/KG	<0.010
TRICHLOROFLUOROMETHANE	MG/KG	<0.010
VINYL CHLORIDE	MG/KG	<0.025
TOTAL XYLENES	MG/KG	<0.025

SURROGATES:	
BROMOCHLOROMETHANE (%)	77
TRIFLUOROTOLUENE (%)	106

Analytical Technologies, Inc.

GAS CHROMATOGRAPHY RESULTS - QUALITY CONTROL

REAGENT BLANK

TEST	: EPA 8010/8020	ATI I.D.	: 407421
BLANK I.D.	: 081294	MATRIX	: NON-AQ
CLIENT	: PUBLIC SERVICE COMPANY OF NM	DATE EXTRACTED	: NA
PROJECT #	: (NONE)	DATE ANALYZED	: 08/12/94
PROJECT NAME	: PERSON STATION	DIL. FACTOR	: 1

PARAMETER	UNITS	
BENZENE	MG/KG	<0.025
BROMODICHLOROMETHANE	MG/KG	<0.010
BROMOFORM	MG/KG	<0.010
BROMOMETHANE	MG/KG	<0.030
CARBON TETRACHLORIDE	MG/KG	<0.010
CHLOROBENZENE	MG/KG	<0.025
CHLOROETHANE	MG/KG	<0.025
CHLOROFORM	MG/KG	<0.010
CHLOROMETHANE	MG/KG	<0.025
DIBROMOCHLOROMETHANE	MG/KG	<0.010
1,2-DIBROMOETHANE (EDB)	MG/KG	<0.010
1,2-DICHLOROBENZENE	MG/KG	<0.025
1,3-DICHLOROBENZENE	MG/KG	<0.025
1,4-DICHLOROBENZENE	MG/KG	<0.025
1,1-DICHLOROETHANE	MG/KG	<0.010
1,2-DICHLOROETHANE (EDC)	MG/KG	<0.010
1,1-DICHLOROETHENE	MG/KG	<0.010
CIS-1,2-DICHLOROETHENE	MG/KG	<0.010
TRANS-1,2-DICHLOROETHENE	MG/KG	<0.010
1,2-DICHLOROPROPANE	MG/KG	<0.010
CIS-1,3-DICHLOROPROPENE	MG/KG	<0.010
TRANS-1,3-DICHLOROPROPENE	MG/KG	<0.010
ETHYLBENZENE	MG/KG	<0.025
METHYLENE CHLORIDE	MG/KG	<0.50
1,1,2,2-TETRACHLOROETHANE	MG/KG	<0.010
TETRACHLOROETHENE	MG/KG	<0.025
TOLUENE	MG/KG	<0.025
1,1,1-TRICHLOROETHANE	MG/KG	<0.050
1,1,2-TRICHLOROETHANE	MG/KG	<0.010
TRICHLOROETHENE	MG/KG	<0.010
TRICHLOROFLUOROMETHANE	MG/KG	<0.010
VINYL CHLORIDE	MG/KG	<0.025
TOTAL XYLENES	MG/KG	<0.025

SURROGATES:	
BROMOCHLOROMETHANE (%)	90
TRIFLUOROTOLUENE (%)	111

Analytical Technologies, Inc.

GAS CHROMATOGRAPHY - QUALITY CONTROL

MSMSD

TEST	: PURGEABLE HALOCARBONS/AROMATICS (EPA 8010/8020)		
MSMSD #	: 40742105	ATI I.D.	: 407421
CLIENT	: PUBLIC SERVICE COMPANY OF NM	DATE EXTRACTED	: 07/29/94
PROJECT #	: (NONE)	DATE ANALYZED	: 08/12/94
PROJECT NAME	: PERSON STATION	SAMPLE MATRIX	: NON-AQ
REF. I.D.	: 40742105	UNITS	: MG/KG

PARAMETER	SAMPLE RESULT	CONC SPIKE	SPIKED SAMPLE	% REC	DUP SPIKE	DUP % REC	RPD
BENZENE	<0.025	0.5	0.58	116	0.59	118	2
CHLOROBENZENE	<0.025	0.5	0.57	114	0.57	114	0
1,1-DICHLOROETHENE	<0.010	0.5	0.49	98	0.52	104	6
TOLUENE	<0.025	0.5	0.60	120	0.61	122	2
TRICHLOROETHENE	<0.010	0.5	0.58	116	0.62	124	7

$$\% \text{ Recovery} = \frac{(\text{Spike Sample Result} - \text{Sample Result})}{\text{Spike Concentration}} \times 100$$

$$\text{RPD (Relative Percent Difference)} = \frac{(\text{Sample Result} - \text{Duplicate Result})}{\text{Average Result}} \times 100$$

AnalyticalTechnologies, Inc., Albuquerque, NM
San Diego • Phoenix • Seattle • Pensacola • Ft. Collins • Portland • Albuquerque

CHAIN OF CUSTODY

DATE: 7/29/94 PAGE 1 OF 1

ATI LAB I.D. 407421

PLEASE FILL THIS FORM IN COMPLETELY. SHADED AREAS ARE FOR LAB USE ONLY.

PROJECT MANAGER: Ron Johnson

COMPANY: P.N.M.
ADDRESS: Alvarado Square -0408
Albuquerque, NM 87158
PHONE: (505) 848-2998
FAX: (505) 848-2340

BILL TO:
COMPANY: SAME
ADDRESS:
Attn: Ron Johnson

ANALYSIS REQUEST

SAMPLE ID	DATE	TIME	MATRIX	LAB ID	Petroleum Hydrocarbons (418.1)	(MOD 8015) Gas/Diesel	Diesel/Gasoline/BTXE/MTBE (MOD 8015/8020)	BTXE/MTBE (8020)			Chlorinated Hydrocarbons (601/8010)	Aromatic Hydrocarbons (602/8020)	SDWA Volatiles (502.1/503.1), 502.2 Reg. & Unreg.			Pesticides/PCB (608/8080)	Herbicides (615/8150)	Base/Neutral/Acid Compounds GC/MS (625/8270)	Volatile Organics GC/MS (624/8240)	Polynuclear Aromatics (610/8310)			SDWA Primary Standards - Arizona	SDWA Secondary Standards - Arizona	SDWA Primary Standards - Federal	SDWA Secondary Standards - Federal			The 13 Priority Pollutant Metals	RCRA Metals by Total Digestion	RCRA Metals by TCLP (1311)		NUMBER OF CONTAINERS
VEW-114	7/29/94	0806	S	01							X	X																					2
VEW-119	7/29/94	0844		02							X	X																					2
VEW-124		0911		03							X	X																					2
VEW-129		0930		04							X	X																					2
VEW-134		0948		05							X	X																					2
Trip Blank	07/27/94	3304	MeOH	06							X	X																					1

PROJECT INFORMATION		SAMPLE RECEIPT	
PROJ. NO.:		NO. CONTAINERS	11
PROJ. NAME: Pearson Station		CUSTODY SEALS	Y / N / (NA)
P.O. NO.:		RECEIVED INTACT	Y
SHIPPED VIA:		RECEIVED COLD	Y

PRIOR AUTHORIZATION IS REQUIRED FOR RUSH PROJECTS

(RUSH) ☐ 24hr ☐ 48hr ☐ 72hr ☐ 1 WEEK (NORMAL) ☒ 2 WEEK

Comments:
Matrix: Soil in methanol
Yes: Data Disk C.S. on the cooler

SAMPLED & RELINQUISHED BY: 1.	RELINQUISHED BY: 2.	RELINQUISHED BY: 3.
Signature: Time: 1015	Signature: Time:	Signature: Time:
Printed Name: Ron Johnson Date: 7/29/94	Printed Name: Date:	Printed Name: Date:
Company: PNM Phone: 848-2998	Company:	Company:

RECEIVED BY: 1.	RECEIVED BY: 2.	RECEIVED BY: (LAB) 3.
Signature: Time:	Signature: Time:	Signature: Time: 10:15
Printed Name: Date:	Printed Name: Date:	Printed Name: Date: Dianne Cutter 7/29/94
Company:	Company:	Analytical Technologies, Inc.

Person Station VEW Soil Boring

PCE Concentration at Depth

PCE Concentration (mg/kg)

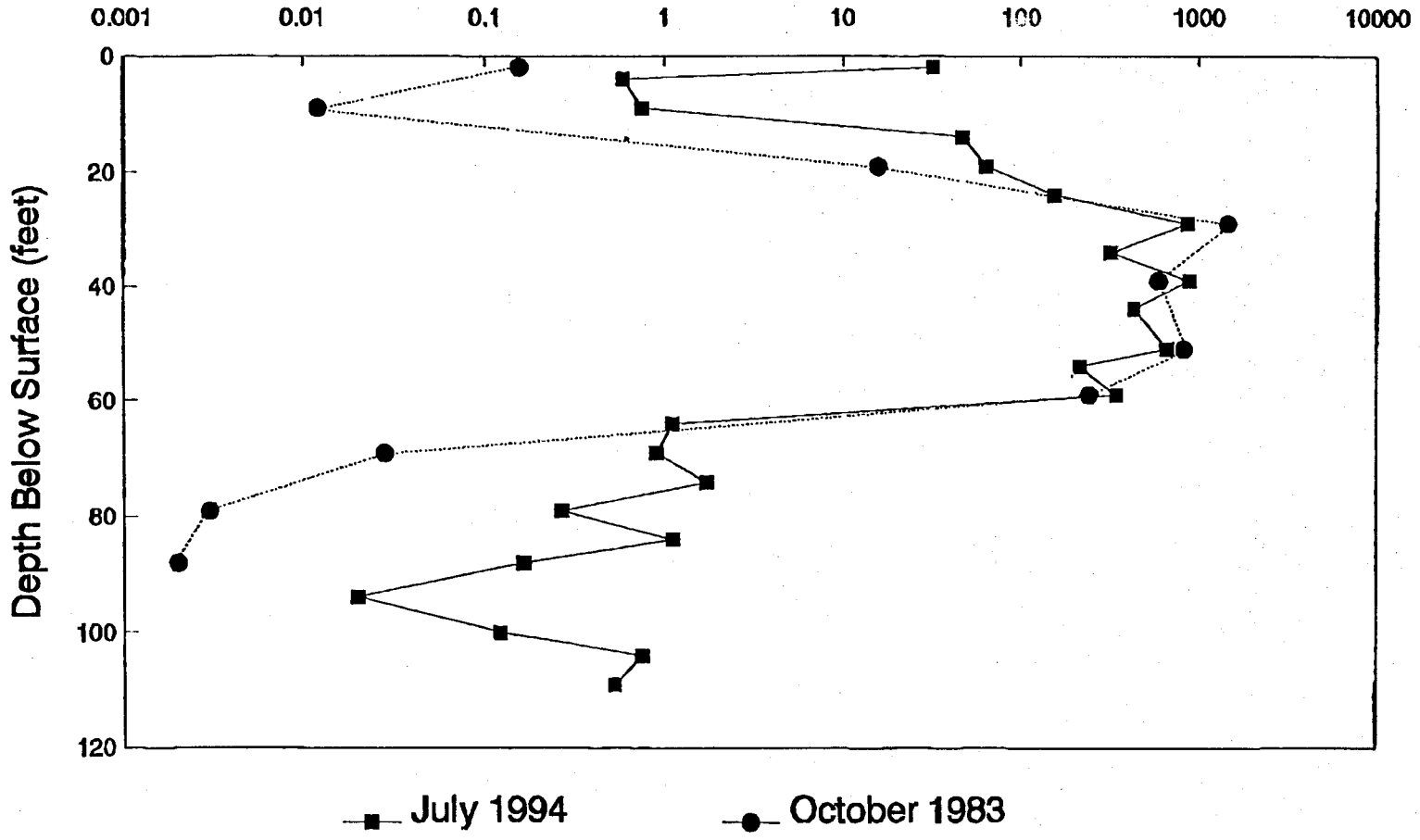

ATTACHMENT 2

SVE SYSTEM OPERATIONS AND MAINTENANCE MANUAL

Soil Vapor Extraction System Operations and Maintenance Manual Person Generating Station Albuquerque, New Mexico

Prepared For

Public Service Company of New Mexico Albuquerque, New Mexico

November 1994

PARSONS ENGINEERING SCIENCE, INC.

1700 Broadway, Suite 900 • Denver, Colorado 80290

TABLE OF CONTENTS

1.0 INTRODUCTION 1-1

2.0 VAPOR EXTRACTION SYSTEM OPERATION 2-1

2.1 PRINCIPLE OF OPERATION 2-1

2.2 SYSTEM DESCRIPTION 2-1

2.2.1 SITE LAYOUT 2-1
2.2.2 VACUUM BLOWER 2-1
2.2.3 GRANULAR ACTIVATED CARBON UNITS 2-3
2.2.4 PIPING AND INSTRUMENTATION 2-3
2.3 MANAGEMENT OF EXTRACTED VAPOR 2-3
2.3.1 VENDOR CONTACT INFORMATION 2-5
2.3.2 GAC UNIT SPECIFICATIONS 2-6

3.0 SYSTEM MONITORING 3-1

3.1 INTRODUCTION 3-1

3.2 BLOWER SYSTEM PERFORMANCE 3-1

3.2.1 VACUUM/PRESSURE 3-1
3.2.2 TEMPERATURE 3-1
3.2.3 FLOW RATE 3-3

3.3 GAC UNIT PERFORMANCE 3-3

3.4 ROUTINE GAC CHANGEOUT PROCEDURE 3-5

3.5 SOIL VAPORS 3-6

3.5.1 VOC CONCENTRATION 3-6
3.5.2 VAPOR SAMPLE COLLECTION PROCEDURES 3-6
3.5.3 VACUUM MEASUREMENT 3-6

3.6 SCHEDULE 3-6

4.0 SYSTEM MAINTENANCE 4-1

4.1 BLOWER SYSTEM 4-1

4.1.1 BLOWER/MOTOR 4-1
4.1.2 GAC UNIT 4-1
4.1.3 KNOCK-OUT POT 4-1
4.1.4 AIR FILTER 4-1
4.1.5 MAJOR REPAIRS 4-2
4.1.6 MAINTENANCE SCHEDULE 4-2

5.0 LABORATORY SAMPLE HANDLING 5-1

5.1 CONTAINERS, VOLUME, PRESERVATION, AND HOLDING TIME 5-1

5.2 SAMPLE IDENTIFICATION 5-1

5.3 SAMPLE PACKAGING AND DELIVERY 5-1

5.4 SAMPLE CUSTODY 5-2

5.4.1 SAMPLE LABELS 5-2
5.4.2 CHAIN-OF-CUSTODY FORMS 5-2

1.0 INTRODUCTION

This operation and maintenance (O&M) manual was prepared for Public Service Company of New Mexico (PNM). The objective of this manual is to describe procedures to operate, monitor, and maintain an *in situ* soil vapor extraction remediation system at Person Generating Station, Albuquerque, New Mexico.

- This O&M manual is organized into 5 sections including this introduction. The sections following the introduction include:
- Section 2.0: Description of the vapor extraction system and operation procedures;
- Section 3.0: Discussion of system monitoring and monitoring schedule; and
- Section 4.0: System maintenance and repairs;
- Section 5.0: Laboratory sampling and handling.

Appendices include the following:

- Extraction System Data Collection Sheets;
- Service Manual for Rotron Blower; and
- Activated Carbon Vendor Information.

2.0 VAPOR EXTRACTION SYSTEM OPERATION

2.1 PRINCIPLE OF OPERATION

Vapor extraction (VE) is the forced extraction of soil vapor to remove volatile organic compounds (VOCs) from unsaturated soils. The basic theory of soil VE is to apply a negative pressure, or vacuum, to the subsurface to create a pressure gradient. This gradient produces advective air flow which will remove vapor-phase compounds and also promote continued volatilization of organic compounds present in other phases. The vacuum is created by using blowers or vacuum pumps and is applied to the subsurface via vapor extraction wells (VEWs).

The system will initially operate continuously but may eventually be changed to a pulsed mode to optimize VOC removal. The determination if and when pulsed operation should begin will be based on the evaluation of VOC monitoring results.

2.2 SYSTEM DESCRIPTION

2.2.1 Site Layout

The VE system will remediate soils beneath the former waste tank location at the PNM site. Figure 2.1 shows the locations of the blower system, VEW, vapor monitoring points (VMPs) and existing groundwater monitoring wells. Selected groundwater monitoring wells and two newly installed soil gas probes (SGs) will be used to monitor subsurface soil vapor pressure, and soil gas VOC concentrations.

2.2.2 Vacuum Blower

To create a vacuum in the subsurface, a vacuum blower will be used to remove air from the VEWs. An EG&G Rotron™ Model EN8 regenerative, direct drive, explosion-proof blower has been installed at the site. The blower is capable of providing 100 to 400 SCFM at 100 inches to 0 inches of water-column vacuum, respectively. The blower is driven by an explosion-proof 10-horsepower (HP) motor. The motor is rated for continuous-duty service, full voltage starting, and is suitable for outdoor locations.

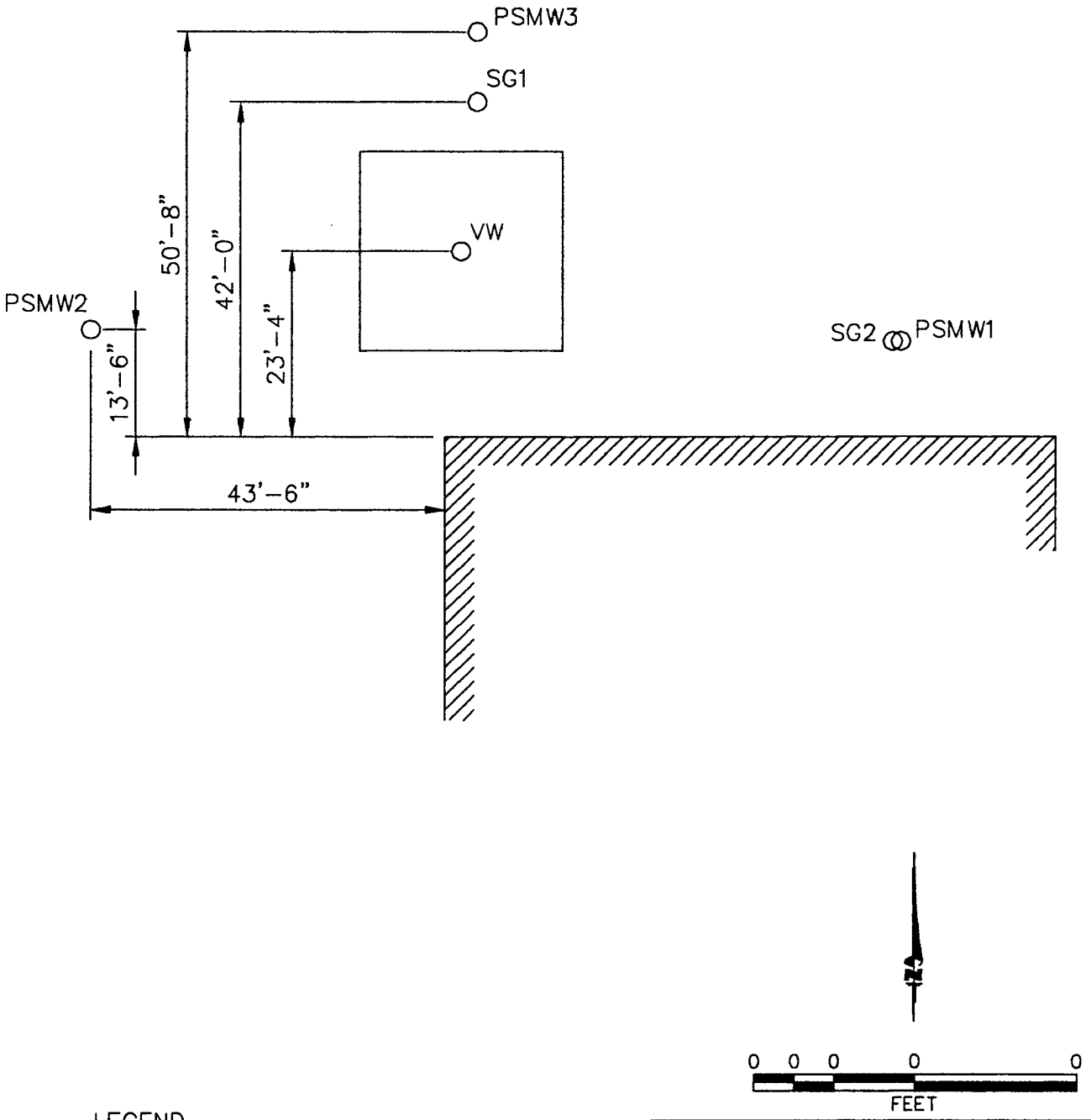

LEGEND

VW ○ VENT WELL

SG2 ○ SOIL GAS PROBE

PSMW1 ○ PUBLIC SERVICE MONITORING WELL

▨ BUILDING

FIGURE 2.1

SITE PLAN
SVE SYSTEM

Person Generating Station
Public Service Company
Alberquerque, New Mexico

ENGINEERING-SCIENCE, INC.

Denver, Colorado

94DN1003,10/20/94 at 08:00

A schematic of the VE system is shown on Figure 2.2. The system consists of a vacuum blower, a knock-out pot, an air filter, GAC vessels, flow control and air bleed valves, pressure and temperature gauges, a flow indicator, and air sampling points.

It is important to keep water and particulates out of the system. A knock-out pot (to remove condensates) and an air filter (to remove particulates) has been placed in-line before the blower inlet to protect the system (Figure 2.2). Additionally, the header pipe has been sloped so that any condensation that may collect in the header will gravity drain toward the well.

2.2.3 Granular Activated Carbon Units

Two 1800-pound GAC vessels are being used to treat the extracted vapors. The vessels are piped in series, and the flow control valves can be adjusted to direct the extracted vapors through either or both vessels. Normally the flow is directed through both vessels operated in a series configuration. The first vessel removes most of the VOCs while, the second unit operates as a "polishing" unit to ensure air emissions permit limits are not exceeded.

2.2.4 Piping and Instrumentation

The piping connecting the VEW to the knock-out pot consists of 4-inch PVC pipe and associated fittings. A pressure indicator, bleed valve, sampling ports, temperature indicator, and flow indicator are located in this section of piping.

The knock-out pot includes a drain, a level sight gauge, and has a capacity of approximately 40 gallons.

A particulate filter has been placed in-line between the knockout pot and the blower to protect the system. A pressure indicator is located after the filter to measure the pressure differential across the knock-out pot and filter. Vacuum relief valves are also located between the VEW and knock-out pot and after the blower.

The piping connecting the blower to the GAC unit and the GAC unit to the exhaust stack consists of 3-inches diameter schedule 40 PVC. A pressure indicator, temperature indicator, flow indicator, and vapor sampling port have been installed in the piping between the blower and the GAC unit. Another sampling port is located on the exhaust stack.

2.3 Management of Extracted Vapor

As described in the sections above, VOCs are removed from soils by means of soil vapor extraction (SVE). Proper treatment and management of the extracted vapors is dictated by the emissions permit obtained from the City of Albuquerque. This permit sets forth the allowable hourly emissions rate for hazardous air pollutants. Proper management and operation of the treatment system will ensure that the permit conditions are satisfied.

The permit obtained for operating the Person Generating Station SVE system currently includes emissions rates for; total organic compounds (0.75 lb/hr), 1,1,1-

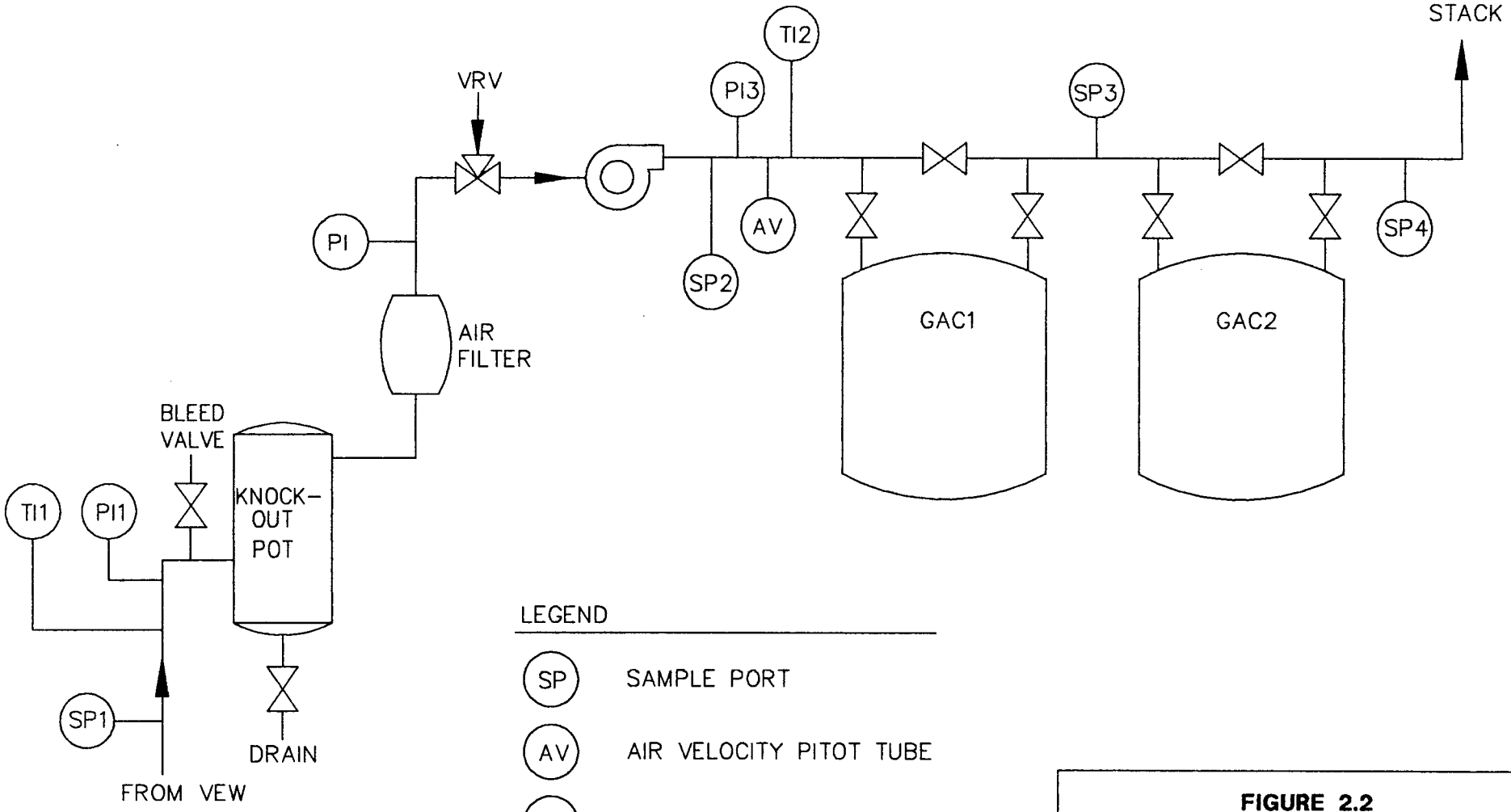

LEGEND

SP	SAMPLE PORT
AV	AIR VELOCITY PITOT TUBE
PI	PRESSURE INDICATOR
TI	TEMPERATURE INDICATOR
VRV	VACUUM RELIEF VALVE
GAC	GRANULATED ACTIVATED CARBON

FIGURE 2.2

PROCESS FLOW AND INSTRUMENTATION DIAGRAM

Person Generating Station
Public Service Company
Alberquerque, New Mexico

ENGINEERING-SCIENCE, INC.
Denver, Colorado

94DN1091 10/19/94 at 16:10

trichloroethane (0.375 lb/hr), tetrachloroethene (0.375 lb/hr), and 1,1-dichloroethene (0.003 lb/hr). In order to satisfy the permit conditions, air treatment by granular activated carbon (GAC) adsorption has been selected. The extracted vapors are passed through two GAC units operated in series. VOCs are removed from the air stream via adsorption onto the GAC. Upon approaching the adsorbent capacity of the GAC, breakthrough of the volatile constituents is imminent and the lead GAC unit must be replaced to ensure compliance with the permitted emission rates. Due to the variety of GAC commercially available, specific information regarding constituents to be removed and the adsorptive capacity of a given GAC must be known. Although loading capacities can be obtained from GAC vendors, these capacities are based upon average and/or ideal situations. The actual loading capacity for a given site must be determined through operation of the system at the specific site to ensure compliance with the site-specific emissions permit. However, adequate GAC selection can be made based upon a knowledge of vendor provided loading capacities.

Upon selecting a given GAC system, specific vendor information regarding the system should be maintained. This information typically includes loading capacities for various volatile organic compounds, system dimensions, air flow rate capacities, pressure drop versus flow rate, installation and start-up procedures, and cost data. The GAC units currently in use are obtained from Westates Carbon. Specific product information, as obtained from Westates, is provided as Appendix B. A summary of this information is provided below.

2.3.1 Vendor Contact Information

The current vendor contact is:

Mr. Keith Jones
Westates Carbon
Oakland, California
Phone: (510) 639-7274
Fax: (510) 639-7762

2.3.2 GAC Unit Specifications

The following specifications are only applicable to the GAC units obtained through Westates. This manual should be updated in the event an alternative vendor, or GAC unit, is selected.

Model No.: VSC 2000

Dimensions	48" (L) X 45-1/2" (D) X 86" (H)
Shipping Weight	2,340 lb
Maximum Air Flow Rate	500 cfm
Maximum Pressure	12 psig
Maximum Vacuum	6 psig
Maximum Temperature	120 ^{o}F

Carbon Type: CC-601 Coconut Shell
U.S. Sieve 4X8

Isotherm Data for CC-601 Coconut Shell Carbon

Isotherm Parameters:	Temperature	48.9 ^{o}C
	Pressure	14.7 psia
	Air Flow	240 scfm

3.0 SYSTEM MONITORING

3.1 INTRODUCTION

This section describes procedures that will be followed to monitor the VE system performance. Monitoring will include the following activities:

- Periodic blower system inspections;
- Periodic sampling of extracted soil vapors for VOCs;
- Periodic sampling of GAC unit effluent; and
- Measuring soil gas pressures at selected groundwater monitoring wells.

This monitoring schedule is presented on Table 3.1. Monitoring data will be used to track soil remediation progress, assure adequate blower and GAC unit performance, determine if the system should be operated in a pulsed mode, ensure compliance with the City of Albuquerque air emissions permit, and aid in determining when *in situ* remediation is complete.

3.2 BLOWER SYSTEM PERFORMANCE

To monitor the blower performance, vacuum, pressure, and temperature will be measured regularly. These data will be recorded on a data collection sheet (provided in Appendix A). All measurements should be taken at the same time while the system is running. Blower and motor noise will be monitored by PNM personnel, and appropriate hearing protection will be used as necessary.

3.2.1 Vacuum/Pressure

Read and record the vacuum and pressure readings directly from the gauges. Vacuum gauges read in inches of water whereas, pressure gauges read in pounds per square inch. Enter the measurements on the data collection sheet.

3.2.2 Temperature

Read and record the temperature reading directly from the gauge in degrees Fahrenheit (°F). Enter the measurements on the data collection sheet.

TABLE 3.1
Routine Monitoring and Sample Collection Schedule
PUBLIC SERVICE COMPANY OF NEW MEXICO
Person Generating Station, Albuquerque, New Mexico

Sample	Units [a]	Location(s)[b]	NUMBER OF MEASUREMENTS									
			DAY 1	DAY 2	DAY 3	DAY 4	DAY 5	DAY 6	DAY 7	WEEK 2	WEEK 3	WEEK 4
Air flow temperature	°F	TI1, TI2	2–3	2–3	2–3	2–3	2–3	2–3	2–3	Same frequency as week 1.	Same frequency as week 1.	Same frequency as week 1.
System pressure (or vacuum)	psi (in. of H_2O)	PI1, PI2, PI3	2–3	2–3	2–3	2–3	2–3	2–3	2–3	Same frequency as week 1.	Same frequency as week 1.	Same frequency as week 1.
Flow velocity pressure	in. of H_2O	Pitot tube after blower	2–3	2–3	2–3	2–3	2–3	2–3	2–3	Same frequency as week 1.	Same frequency as week 1.	Same frequency as week 1.
PID for VOCs [c] (bleed valve open)	ppm	before blower (SP1)	2–3	2–3	2–3	2–3	2–3	2–3	2–3	TBD[d]	TBD	TBD
PID for VOCs (bleed valve closed)	ppm	before blower (SP1)	2–3	2–3	2–3	2–3	2–3	2–3	2–3	TBD	TBD	TBD
PID for VOCs	ppm	between GAC1 and GAC2 (SP3)	2–3	2–3	2–3	2–3	2–3	2–3	2–3	Same frequency as week 1.	Same frequency as week 1.	Same frequency as week 1.
PID for VOCs	ppm	after GAC2 (SP4)	2–3	2–3	2–3	2–3	2–3	2–3	2–3	TBD	TBD	TBD
Laboratory sample	N/A	before GAC1 (SP2)							1	1	1	1
Laboratory sample	N/A	after GAC2 (SP4)							1	1	1	1

a/ °F = degrees Fahrenheit; psi = pounds per square inch; in. of H_2O = inches of water; ppm = parts per million; N/A = not applicable.
b/ TI = temperature indicator; PI = pressure indicator; GAC = granular activated carbon (treatment units); SP = sample port; refer to Figure 2.2 for locations.
c/ PID = photoionization detector; VOCs = volatile oraganic compounds.
d/ TBD = to be determined.

3.2.3 Flow Rate

The flow rate out of the VEW (before the bleed valve) and into the GAC unit (after the bleed valve) can be determined using air flow velocities. The air velocity pressure is measured using pitot tubes connected to Magnehelic pressure gauges calibrated in inches of water. The velocity pressure indicated on the Magnehelic gauges can be converted to air velocity using the chart shown on Figure 3.1.

3.3 GAC UNIT PERFORMANCE

The performance of the GAC units will be monitored by measuring the VOC concentration at the sampling ports (SP2, SP3, and SP4, Figure 2.2) in the effluent air stream piping. The GAC units in use at the site continuously remove VOCs from the extracted soil vapors to nondetectable concentrations, until the adsorptive capacity of the GAC unit is reached. The primary objective of GAC performance monitoring is to determine when the first GAC unit has reached breakthrough. When the first unit reaches breakthrough, it must be taken out of service and replaced, as described in Section 3.4.

A semi-quantitative measurement of total VOCs at sampling points will be made with the photoionization detector (PID). The PID is calibrated with ambient air as zero ppm VOCs, and with a 100 ppm isobutylene gas standard. The PID reads total VOCs on a scale from 0 to 2,000 ppm. The measurement can only be considered semi-quantitative due to the limits of a two-point calibration, and the nonselective (total VOCs) measurement.

PID readings provide a useful indication of GAC performance when all sampling ports are monitored and the data is recorded, on a consistent and frequent basis (2-3 times per day). Based on initial analytical results of extracted vapors collected before and after GAC treatment, a PID reading of 100 ppm measured at SP3 should be interpreted as the VOC breakthrough point for GAC1.

Through continued operation of the SVE system, VOC concentrations in the extracted vapors monitored at SP2 are expected to gradually decline. The useful life of the GAC units will increase as the VOC concentrations decrease. The VOC breakthrough concentration will also decrease through continued operation. PID monitoring at SP2 and SP3 must continue at the frequency of 2-3 readings per day to track the change in extracted vapor concentration, and to ensure that the change (increase) in GAC-treated VOC concentration at SP3, indicative of breakthrough, is observed and acted upon.

The PID reading at SP4, downstream from GAC2, should always be 1 ppm or less. Any PID reading greater than 1 ppm may be indicative of VOC breakthrough through both GAC units, and could result in violation of the permitted emission limit for 1,1-dichloroethene. If a PID reading measured at SP4 is greater than 1 ppm, the instrument should be checked for proper calibration and general operating condition. when proper operation of the instrument is confirmed, SP4 should be rechecked. If the reading is still greater than 1 ppm, the routine GAC changeout procedure, described in Section 3.4 should be followed.

FIGURE 3.1

AIR FLOW RATE CHART

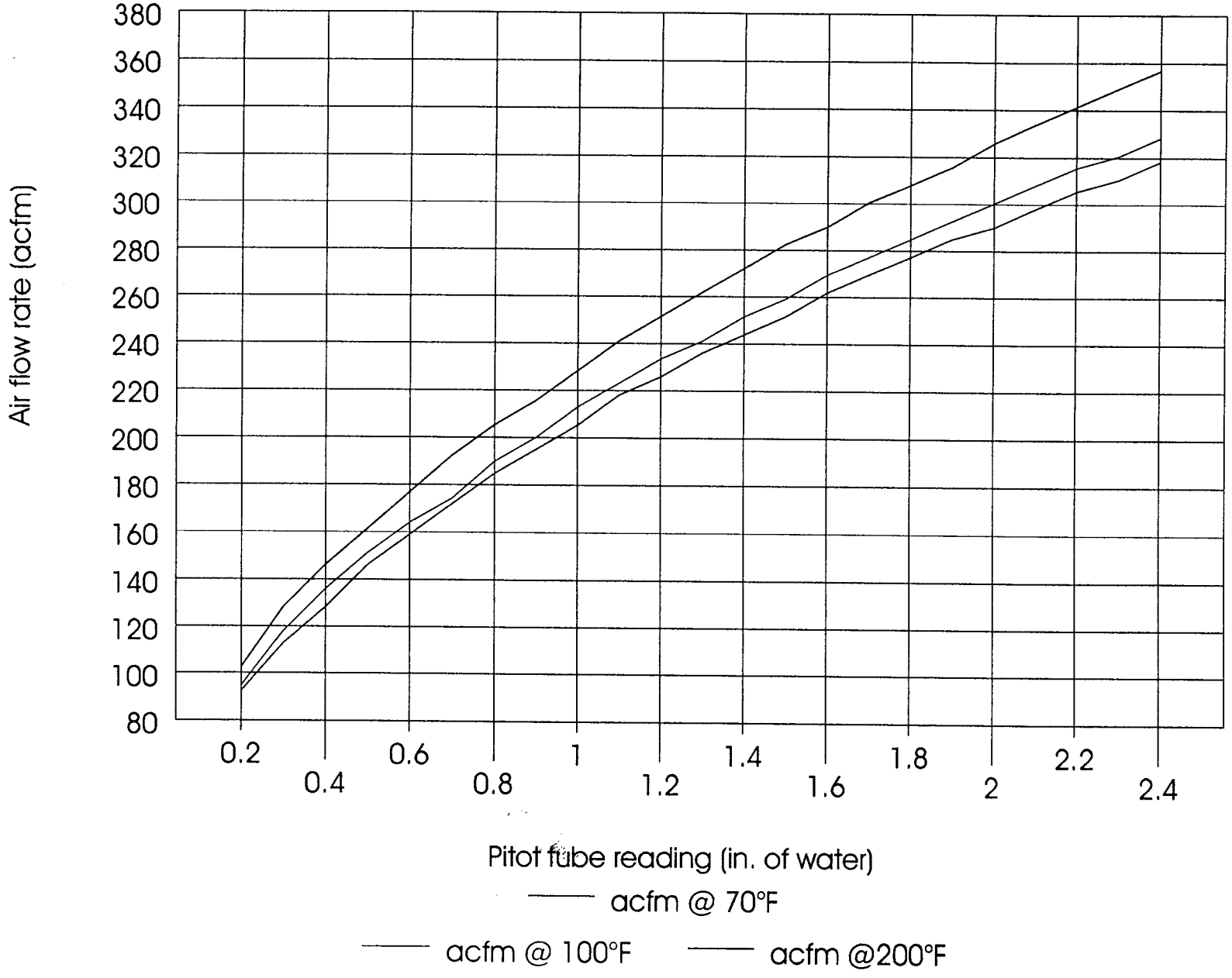

An approximation of the total mass of VOCs removed by GAC1 and GAC2 can be made using the PID readings at SP2, SP3, and SP4; air flow rate; and cumulative operation time, as follows:

1. Determine pounds per minute (lb/min) of VOCs at SP2 using the equation:

$$(PID/1{,}000{,}000)x(\text{air flow rate})x(0.298 \text{ lbs VOCs/ft}^3) = \text{lbs VOC/min.}$$

where PID = reading from PID in ppm, and
air flow rate = rate in ft^3/min from Figure 3.1, and pitot tube reading

2. Determine lb/min of VOCs at SP3 (or SP4), as above.

3. Subtract SP3 lb/min from SP2 lb/min. Convert lb/min to lb/hr, by multiplying by 60.

4. Multiply the difference in lb/hr (from step 3) by cumulative operating hours. The result is the approximate total pounds of VOCs removed from the air stream.

The approximate mass of VOCs removed by GAC2 can be similarly determined, using the difference between PID readings at SP3 and SP4. Note that this approximation is subject to the limitations of PID precision and accuracy, and may not be used if the SP2 readings are off-scale (greater than 2,000 PPM). This approximation also assumes a constant flow rate through all operating time. If the flow rate varies, the accuracy of the approximation is adversely affected.

.The total mass of VOCs removed by GAC1 is of critical importance. To obtain optimal performance from two GAC units in series, VOC breakthrough of the first unit must be closely monitored. GAC1 must be replaced when its adsorptive capacity is saturated and VOCs begin to break through. Based on the adsorptive affinities and expected concentrations of the three primary VOCs of concern (tetrachloroethene, 1,1,1-trichloroethane, and 1,1-dichloroethene) GAC1 should be replaced when monitoring results from SP2 and SP3 indicated that 380 pounds of VOCs have been removed, or when the SP3 PID reading is 100 ppm, whichever occurs first.

3.4 ROUTINE GAC CHANGEOUT PROCEDURE

When SP3 monitoring results, or a calculation of total pounds of VOCs removed, indicate that GAC1 is spent, the following changeout procedure should be followed:

1. Shut down SV extraction blower.
2. Disconnect the inlet and outlet of the spent unit.
3. Move the spent unit with a forklift to the spare GAC storage area.
4. Disconnect the inlet and outlet to GAC2.
5. Move the polishing unit (GAC2) with a forklift to the first position in series (where the spent unit was previously).
6. Move a fresh GAC unit with a forklift to the second position in series, to serve as the new polishing unit.
7. Connect the line from the blower to the inlet of the first unit.
8. Connect the line from the first unit's outlet to the second units inlet.
9. Connect the line from the second unit's outlet to the stack.
10. Restart the extraction blower.

11. Sample all pressure, temperature, flow rate, and VOC monitoring points to ensure proper operation of the system.

3.5 SOIL VAPORS

3.5.1 VOC Concentration

The concentration of VOCs in the soil vapor will be measured at the sampling port located in the outlet piping of the blower system before the GAC units. To accurately measure the VOC concentration in the extracted soil gas, it will be necessary to completely close the bleed valve 5 minutes prior to measuring VOC concentrations. The soil vapors will be screened in the field using a photoionization detector (PID), and samples will be collected for laboratory VOC analysis. During system operation, samples will be collected for field screening and laboratory analysis according to the schedule presented on Table 3.1.

3.5.2 Vapor Sample Collection Procedures

Extracted soil vapor samples will be collected for field screening and laboratory analysis directly from the sampling ports. For field screening, the PID is connected to the stem of a "tee" with a short length of Tygon ™ tubing. To measure the VOC concentration, the sampling port valve is opened and the VOC concentration is measured with the PID and recorded on the data collection sheet. The tee allows the vapor stream to pass by the PID sampling probe. Never connect the PID to sample tubing which is under pressure as it will result in erroneous readings. For analytical laboratory samples 1-liter evacuated stainless steel (SUMMA™) canisters will be used. A simple checklist and diagram for operating these canisters is provided on Figure 3.2. The canister is connected directly to the sampling port with a 6-inch section of clean Tygon™ tubing. The gas is transferred by first opening the sampling valve and then opening the valve on the evacuated cylinder. The sample will transfer rapidly. Once the transfer is complete, the valve on the cylinder should be immediately closed and the hose barb replaced with the treaded cap. The canister is now ready to be shipped to the laboratory for VOC analysis using Method TO-14.

3.5.3 Vacuum Measurement

Initial soil vapor pressures (vacuum) at various depths and distances from the VEW were measured by Parsons ES during system start up at the SGs and existing groundwater monitoring wells shown on Figure 2.1. From this data it is apparent that the entire contaminated soil volume is being treated. Additional vacuum measurements are not required.

3.6 SCHEDULE

System monitoring and sample collection will follow the interim schedule presented in Table 3.1. A recommendation to change to pulsed system operation may be made based on soil vapor monitoring results as discussed in Section 2.1. This interim schedule will be reevaluated and, an extended monitoring schedule developed following the first week and again after the first month of system operation.

FIGURE 3.2

INSTRUCTIONS FOR TAKING SAMPLES USING SUMMA® CANNISTERS
PUBLIC SERVICE COMPANY OF NEW MEXICO
Person Generating Station
Albuquerque, New Mexico

Required Equipment:

Evacuated SUMMA® cannisters
a 2-7 micron filter
a 1/2" open-end wrench
a 9/16" open-end wrench
a hose barb adapter to adapt the threaded fitting on the cannister to 3/16" Tygon® tubing.

Assembly of the sampling hardware:

1. Remove the brass cap from the cannister.
2. Connect the filter to the cannister and tighten the filter using the 9/16" wrench.
3. Connect the hose barb to the filter.
4. Connect the well head Tedlar® bag to the hose barb using 3/16" Tygon® tubing (using as short a connector as possible).

The assembly is now complete, sampling will commence when the valve on the cannister (green handle) is opened.

The Final Step

When the sample interval is complete, close the valve (green handle) on the cannister and remove the filter. It is not necessary to over tighten the valve upon closing. Replce the brass cap. Fill out the sampling tracking tag. The cannister may now be returned to the laboratory for analysis.

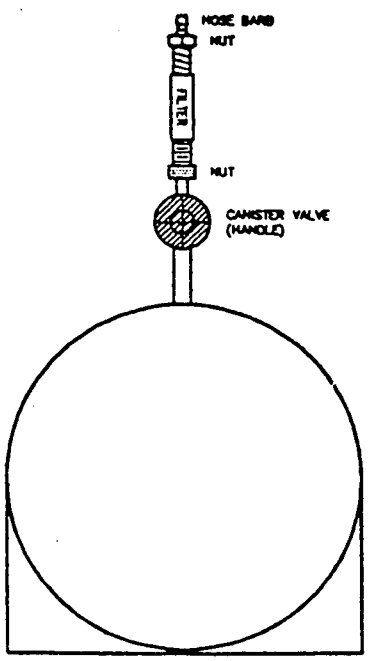

022-I:\722445\40.WW6

4.0 SYSTEM MAINTENANCE

4.1 BLOWER SYSTEM

Although the motor and blower are relatively maintenance free, periodic system maintenance is required for proper operation and long life. Recommended maintenance procedures are described in detail in the instruction manual included in Appendix B and briefly summarized in this section.

4.1.1 Blower/Motor

The blower and motor are relatively maintenance free and should not require any periodic maintenance during the estimated 3-month remediation period. Both blower and motor have sealed bearings and do not require lubrication. It is recommended when starting the system that the bleed valve be opened to protect the motor from excessive strain.

4.1.2 GAC Unit

Management of GAC units will be determined based on system monitoring results as described in Section 3.3.

4.1.3 Knock-Out Pot

To avoid damage caused by passing liquids through the blower a knock-out pot has been installed in-line before the blower. The knock-out pot intercepts entrained liquid, preventing damage to the blower. The pot should be drained into an appropriate container once a month, or as necessary. Condensate should be stored in a clearly marked 55-gallon drum. Once the groundwater treatment system is in place, the condensate will be transferred to the headworks of the system for treatment. Condensation generally increases during the cold winter months. The pot can be drained by turning the system off and opening the valve at the base of the knock-out pot. When all of the liquid has drained out, the system can be turned back on

4.1.4 Air Filter

To avoid damage caused by passing solids through the blower, an air filter has been installed in-line before the blower. The filter element is paper and is accompanied by a polyurethane foam prefilter. The filter should be checked weekly for the first month of operation. PNM employees will determine the best schedule for filter replacement based on the first month of operation. When the pressure or vacuum drop across the filter increases, a dirty filter element should be suspected, and replaced as necessary.

To remove the filter, loosen the clamps, lift the metal top off the air filter, and lift the air filter from the metal housing. Remove the filter element, inspect, and replace if necessary. When replacing the filter, be careful that the rubber seals remain in place.

Replacement filters are obtained from Fluid Technology, Inc. The current vendor contact at Fluid Technology is Bob Cook, at (303) 233-7400, fax (303) 233-0093.

4.1.5 Major Repairs

The blower system is very reliable when properly maintained. However, if a serious problem develops, it will be remedied as soon as possible. If the motor stops running and fails to re-start, a qualified electrician will be called to inspect the motor blower. The motor and blower carry a one-year warranty. Major repairs should be coordinated with Fluid Technologies, Inc., the system manufacturer, to insure warranty credit. Minor repairs will be performed by PNM technicians.

4.1.6 Maintenance Schedule

The following maintenance schedule is recommended for this system. During the initial months of operation more frequent monitoring is recommended to ensure that any start-up problems are quickly corrected. A daily inspection will be performed during the initial week of operation to ensure that the blower system is operating properly. A maintenance record will be maintained in a bound field book.

Maintenance Item	Maintenance Frequency
Knock-out chamber	Inspect water level weekly and drain as needed (see Section 4.1.3).
Filter	Check once per week, wash or replace as necessary (see Section 4.1.4).
GAC Unit(s)	Monitor pounds of VOCs removed by GAC1. Replace GAC in accordance with the requirements in Section 3.3

5.0 LABORATORY SAMPLE HANDLING

5.1 CONTAINERS, VOLUME, PRESERVATION, AND HOLDING TIME

Vapor samples will be collected in SUMMA canisters, as described in Section 3.5.2.

5.2 SAMPLE IDENTIFICATION

A formal sample identification (I.D) system will be used to designate each laboratory sample taken during the field investigation. The identification system will provide a tracking procedure to allow retrieval of information about a particular sample location and ensure that each sample is assigned a unique sample identification that describes where the sample was collected. Each I.D. will consist of a group of letters and numbers separated by hyphens. The components of each I.D. as well as several example numbers are presented below.

Sample Location: Sample location designations will be as follows:

- VW Sampling port immediately before the GAC unit (bleed valve closed);
- VWD Sampling port immediately before GAC1 (bleed valve open);
- GAC1 Sampling port after GAC1;
- GAC2 Sampling port after GAC2;
- BAC Ambient (background) air QA/QC sample;
- EB Equipment blank QA/QC sample;
- PSMW Monitoring well; and
- SG Soil gas probe.

Sample Number: Samples will be numbered sequentially, beginning with samples collected during August, 1994 (i.e., the initial sample collected after the GAC unit is designated GAC1, the second sample GAC-2, etc.).

5.3 SAMPLE PACKAGING AND DELIVERY

Air Toxics, Ltd. of Folsom, of California is the contract laboratory for soil gas analysis. The laboratory will perform organic analysis of soil gas samples collected from the site using EPA method TO-14 or Method TO-18. Samples will be delivered via Federal Express to the laboratory for analysis within 48 hours of sample collection.

Samples will be packaged in fiberboard boxes. Chain-of-Custody (COC) forms will be sealed in a plastic bag and placed inside the box along with the sample containers.

The following procedures will be used in transferring and shipping samples:

- Samples will be accompanied by a COC record at all times. When transferring the possession of samples, the individuals relinquishing and receiving the samples will sign, date, and note the time on the record. This record documents transfer of custody of samples from the sampler through any intermediary custodians to the laboratory.

- Samples will be properly packaged for shipment and dispatched to the laboratory for analysis with a separate signed COC record included in each sample box.

- All packages will be accompanied by the COC record showing identification of the contents. The original record will accompany the shipment, and a copy will be retained by the field supervisor.

5.4 SAMPLE CUSTODY

Sample custody and documentation procedures described in this section will be followed throughout all sample collection at the PNM site. Components of sample custody are sample labels and COC forms.

5.4.1 Sample Labels

Each sample will be identified with a separate identification label. The following information will be recorded on the label:

- Project name and number; (PSNM - Person #722445.01000)

- Sample identification (including project I.D., location of sample indicated by location identification, sample type, and sample number if applicable);

- Date of sampling (day, month, and year in the form: dd-mon-yy);

- Time of sampling (24-hour, four-digit);

- Analysis to be performed; (TO-14 or TO-18)

- Sampler's names; and

- Any other applicable comments.

5.4.2 Chain-of-Custody Forms

COC forms will be completed for each shipment of samples to track the movement of samples and to provide a written record of all persons handling the samples. A blank chain-of-custody form has been provided as Figure A-1. The COC form will include sample information (sample identification, type, date, and time of collection), analyses requested, and the signature of each person receiving and relinquishing the samples. The "Remarks" column of the COC form will be used to record additional information which may be of use to the laboratory for prescreening the samples. When transferring samples, the individuals relinquishing and receiving the samples will sign, date, and note the time on the COC form.

The original COC form will accompany the samples to the laboratory. The laboratory will make and maintain a file copy, and the completed original will be returned to the task manager as a part of the final analytical report. This record serves to document sample custody transfer from the sampler to the shipper, and to the laboratory. Upon receipt of samples, the laboratory will provide a written report to the field investigation manager summarizing the condition of samples, sample numbers received and corresponding laboratory numbers, and the estimated date for completion of laboratory analysis.

APPENDIX A

Extraction System Data Collection Sheet

EXTRACTION SYSTEM DATA COLLECTION SHEET

PUBLIC SERVICE COMPANY OF NEW MEXICO
PERSON GENERATING STATION

Date/ Time	PI-1 Inlet Vacuum 1	TI-1 Inlet Temp	FL-1 Inlet Pitot tube	PI-2 Inlet Vacuum 2	PI-3 Outlet Pressure	TI-2 Outlet Temp	FL-2 Outlet Pitot Tube	VW-D PID reading	VW PID reading	GAC1 PID reading	GAC2 PID reading	Comments[a/]
	in. of H_2O	°F	in. of H_2O	in. of H_2O	psi	°F	in. of H_2O	ppm	ppm	ppm	ppm	

a/ Comments should include PID calibrations, GAC unit changeout, blower air filter changeout, and other relevant operating information.

APPENDIX B

Service Manual For Rotron Blower

Westates Carbon Gac Data

EG&G ROTRON
Industrial Division

EN 8

Explosion-Proof Regenerative Blower For Environmental Remediation

FEATURES

- Manufactured in the USA
- Maximum flow: 400 SCFM
- Maximum pressure: 120″ WG
- Maximum vacuum: 98″ WG
- Standard motor: 10 HP
- Blower construction — cast aluminum housing, impeller and cover
- UL & CSA approved motors for Class I, Group D atmospheres
- Sealed blower assembly
- Quiet operation within OSHA standards

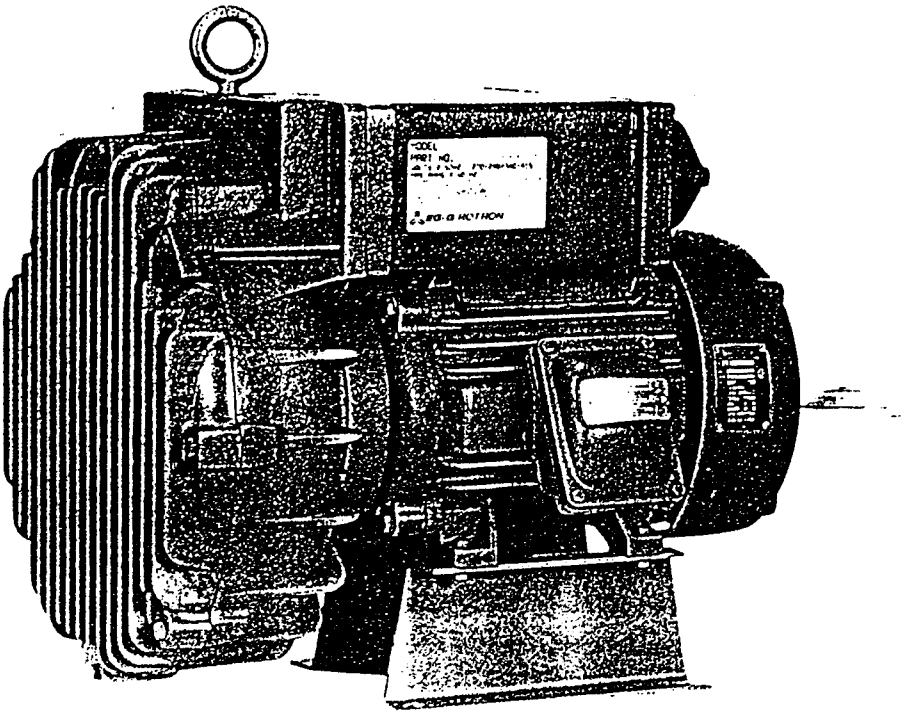

OPTIONS

- 50 Hz motors
- International voltages
- Other HP motors
- Corrosion resistant surface treatments
- Remote drive (motorless) models

ACCESSORIES

- Moisture separators
- Explosion-proof motor starters
- Inline & inlet filters
- Vacuum & pressure gauges
- Relief valves
- External mufflers

BLOWER PERFORMANCE AT STANDARD CONDITIONS

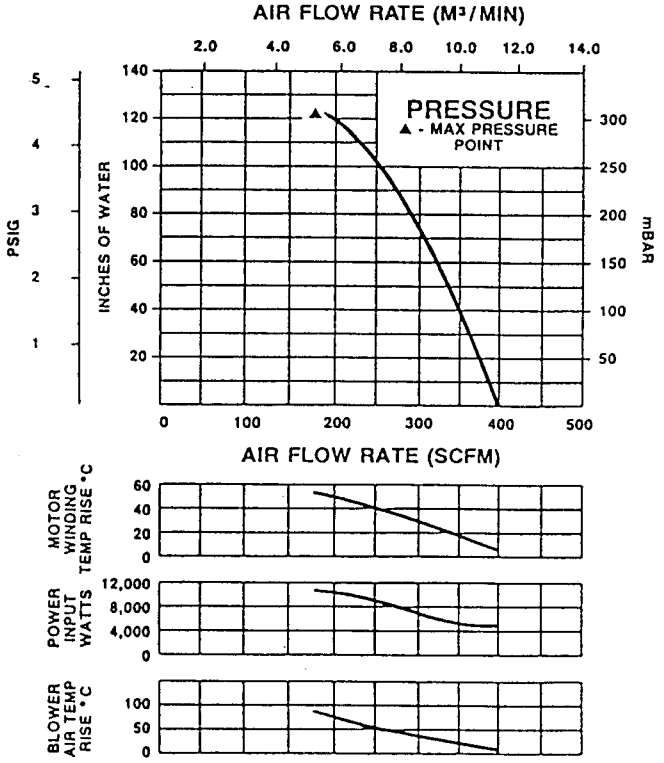

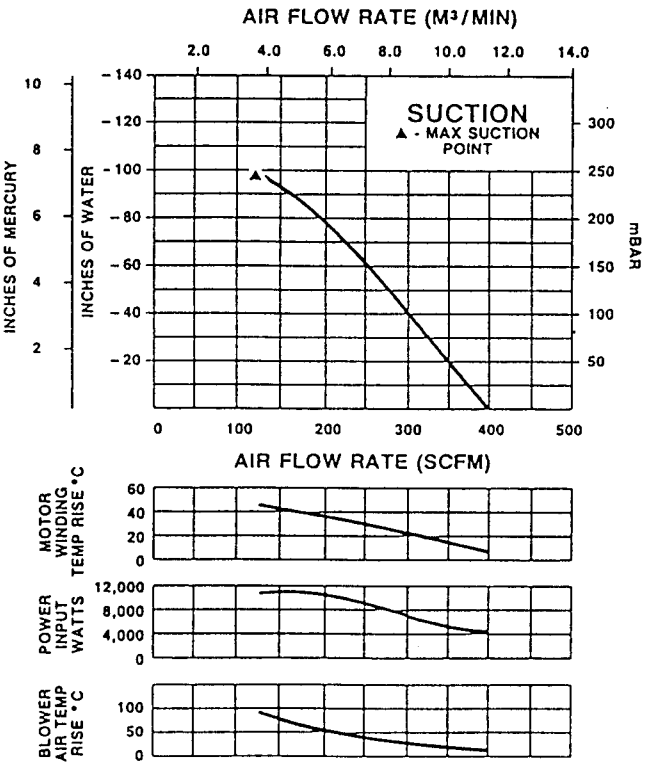

EG&G ROTRON
Industrial Division

EG&G ROTRON
Industrial Division
North Street
Saugerties, NY 12477
Tel: 914/246-3401
Telefax: 914/246-3802
Telex: 981511

EN 8

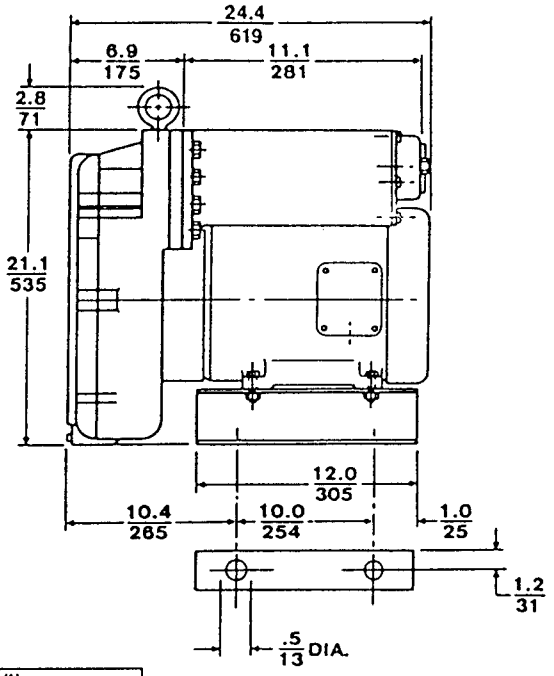

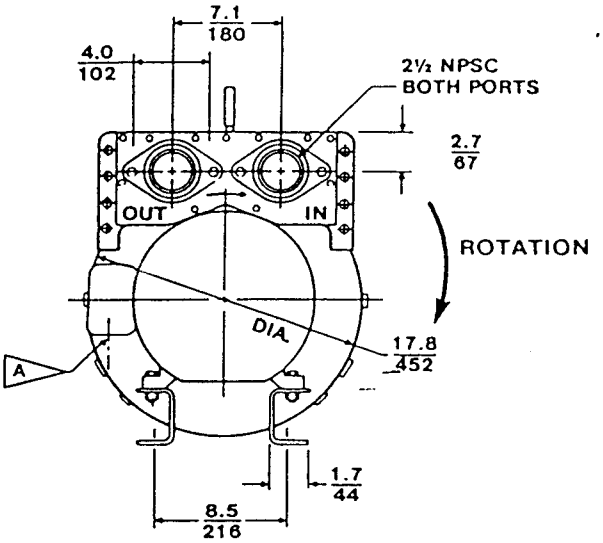

DIMENSIONS: IN / MM
TOLERANCES: .X ± .1 / 2.5
(UNLESS OTHERWISE NOTED)

A 0.75" NPT CONDUIT CONNECTION AT 12 O'CLOCK POSITION

PECIFICATIONS

MODEL	EN8BD72WL	
Part No.	038185	
Motor Enclosure Type	Explosion-proof	
Horsepower	10.0	
Phase — Frequency	Three - 60 Hz	
Voltage	230	460
Motor Nameplate Amps	24	12
Maximum Blower Amps[1]	29	14.5
Inrush Amps	258	116
Starter Size	2	1
Service Factor	1.0	
Thermal Protection	Pilot Duty	
Bearing Type	Sealed, Ball	
Shipping Weight	332 lb (151 kg)	

BLOWER LIMITATIONS

Min. Flow @ Max. Suction	125 SCFM @ −98" WG
Min. Flow @ Max. Pressure	175 SCFM @ 120" WG

[1]Corresponds to the performance point at which the blower and/or motor temperature rise reaches the limit of the thermal protection in the motor.

Specifications subject to change without notice. Please contact factory for specification updates.

SERVICE AND PARTS MANUAL
FOR BLOWER MODEL
EN8

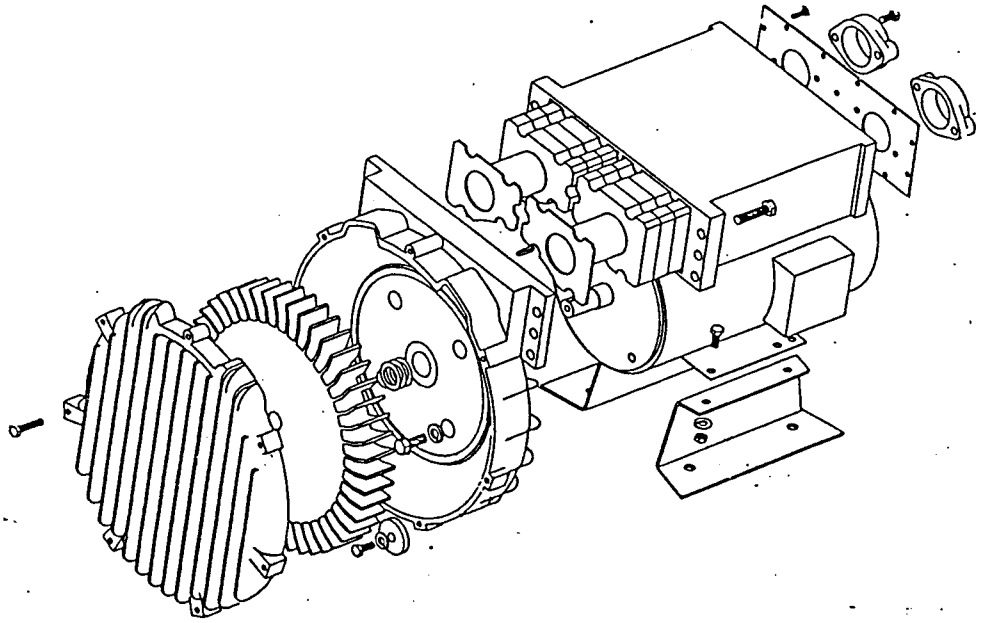

ROTRON INCORPORATED
INDUSTRIAL DIVISION
NORTH STREET
SAUGERTIES, NY 12477
TEL. (914) 246-3401

CONTENTS

Warranty Summary . . . . . Page 2
Installation . . . . . Page 3
Maintenance . . . . . Page 4
Troubleshooting . . . . . Page 5
Disassembly . . . . . Page 6
Bearing Removal & Installation Procedure . . . . . Page 7
Reassembly/Impeller Shimming Procedure . . . . . Pages 8-9
Muffler Replacement . . . . . Page 10
Wiring Diagrams . . . . . Appendix 1
Assembly Diagrams . . . . . Appendix 2
Bearing Selection Chart . . . . . Appendix 3
Replacement Parts . . . . . Appendix 4

Warranty Information

1. No-Fault Policy - EG&G Rotron regenerative direct drive blowers are guaranteed up to one full year from the date of purchase to the original purchaser only. Should the blower fail, regardless of the cause of failure, we will at our option repair or replace the blower.

2. Standard Policy - EG&G Rotron remote drives, Nasty Gas™ models and special built (EO) products are guaranteed up to one full year from date of purchase for workmanship and material defect to the original purchaser only. Should the blower fail, we will evaluate the failure. If determined to be workmanship or material defect, we will at our option repair or replace the blower.

3. Modified Policy - EG&G Rotron packaged units, Vacu-Master models and moisture separators are guaranteed up to one full year from date of purchase for workmanship and material defect to the original purchaser only on all parts excluding maintenance/wear items such as belts and bags. Should the blower fail, we will evaluate the failure. If determined to be workmanship or material defect, we will at our option repair or replace the blower.

4. Parts Policy - EG&G Rotron spare parts and accessories are guaranteed up to three months from date of purchase for workmanship and material defect to the original purchaser only. Should the part fail, we will at our option repair or replace the part.

Corrective Action - A written report will be provided indicating reason(s) for failure, with suggestions for corrective action. If the failure is determined to be a defect in material or workmanship, Rotron will institute a corrective action. Subsequent customer failures due to abuse, misuse, misapplication or repeat offense will not be covered. EG&G Rotron will then notify you of your options. Any failed unit that is tampered with by attempting repair or diagnosis will void the warranty, unless authorized by the factory.

Terms and Conditions - Our warranty covers repairs or replacement of regenerative blowers only, and will not cover labor for installation, shipping costs, accessories or other items not considered integral blower parts. Charges may be incurred on products returned for reasons other than failures covered by their appropriate warranty. Maximum liability will in no case exceed the value of the product purchased. Other terms and conditions of sale are stated on the back of the order acknowledgment.

INSTALLATION

1. BOLT IT DOWN - Any unit must be secured against movement prior to start up or testing to prevent injury or damage.

2. WIRING - Blowers must be wired and protected/fused in accordance with local and national electrical codes. All integral motor blowers must be grounded to prevent electrical shock. Wire motors per motor manufacturer's nameplate or consult wiring diagram (Appendix 1).

3. *PIPING - All blowers, except SL series, should be piped, muffled and/or filtered prior to start up. Care must be taken so that no foreign material enters the blower. If foreign material does enter the blower it could cause impeller imbalance or it may exit at extremely high velocities.

4. SUPPORT THE PIPING - The blower flanges and nozzles are designed as connection points only and are not designed as support members.

5. EXCESS AIR - Bleed it off. DO NOT throttle to reduce flow. When bleeding off excess air the blower draws less power and runs cooler.

6. PRESSURE/SUCTION MAXIMUMS - The maximum pressure and/or suction as listed on the model decal should not be exceeded. A pressure/vacuum relief valve should be used if these maximums could be exceeded. Do not exceed "max blower amps" as per Rotron nameplate.

7. START-UP - Jog power to determine impeller rotation. If rotation is incorrect, rewire per motor nameplate.

8. REMOTE DRIVE (MOTORLESS) BLOWERS - Properly designed and installed guards should be used on all belts, pulleys, couplings, etc. Due to the range of uses and drives, guards are the responsibility of the customer/user.

*CAUTION: Plastic piping should not be used on blowers larger than 1 HP that are operating near their maximum pressure or suction. Blower housing and nearby piping temperatures can exceed 200 Deg. F. Access by personnel to the housing or nearby piping should be limited, guarded, or marked to prevent danger of burns.

MAINTENANCE

No lubrication is required because all units incorporate sealed bearings. Bearing life is approximately 15,000 hours. Replace bearings as needed.

Avoid passing solids or liquids through blower. Use an appropriate filter and/or moisture trap.

Should excessive amounts of material pass through the blower, it is suggested that the cover and impeller be removed periodically and cleaned to avoid impeller imbalance. Impeller imbalance greatly speeds bearing wear, thus reducing blower life.

Preventative Maintenance

Air Filtration

By design EG&G Rotron blowers are able to ingest small quantities of particles without damage. Continuous ingestion of solids will damage or cause impeller imbalance. Inline or inlet filters are highly recommended for all blower applications, especially those in which the purity of the air stream is essential (i.e. plating tanks). Remember, what goes in must come out!

Air supplied by EG&G Rotron blowers is oil free so there is no need for outlet filters. Our inlet filters are rated at 99% efficiency to 10 microns. The filter element is a polyester cloth and is cleanable and replaceable.

Filters with different efficiencies and element materials are available on request. Please see our catalog for filter selection.

Free liquid should not be pumped continuously through the blower. Drop outs or cyclone separators must be placed inline before the blower inlet to intercept entrained liquid.

Flow Controls

Regenerative blowers should not be throttled. These blowers draw more current and run hotter when throttled. Severe motor damage can be incurred by throttling. Instead of throttling, bleed air off. Use an amp meter to monitor running current, as bleed off is adjusted. When running amps are under maximum blower amps (as listed on blower nameplate), then bleed off is correct. Relief valves with adjustable set points can also be used. EG&G Rotron offers a line of pressure and vacuum relief valves. (Please see the master catalog accessory section.)

For applications where gas bleed in/off is not possible, recirculation loops are utilized.

TROUBLESHOOTING

The three most common signs of blower malfunction are:

1) excessive noise
2) high current draw, and/or
3) excessive heat build-up:

1. Excessive Noise

Possible Causes	Solutions
Buildup of ingested material on impeller and housing.	Remove cover. Clean impeller and housing.
Worn bearings.	Replace bearings per specifications. Use only recommended grease.
Impeller interference (impeller hits) due to overheating, which causes metal creep.	Reduce operating point to recommended level. Replace impeller and housing if badly scored.

2. High Current Draw

Possible Causes	Solutions
Damaged or collapsed bearings.	Replace bearings.
Blower operating above rated pressure/vacuum.	Reduce operating point (bleed air, recirculate gas).
Low line voltage, brown out.	Turn off blower until correct voltage is restored.

3. Excessive Heat Buildup

(Same as above section)

Regenerative blowers, especially those in the higher HP ranges, add considerable heat energy to the air stream. It is possible to have a 100° Celcius (212° Fahrenheit) temperature rise above ambient. These temperatures may preclude use of PVC, CPVC or other plastic pipe. If the design point is known, then use of Rotron charts will yield the approximate air temperature rise to be expected (see catalog).

GENERAL DISASSEMBLY

Refer to assembly diagram (Appendix 2) for referenced part designations.

CAUTION: Be sure power is disconnected before doing any work on units.

General Disassembly and Reassembly

1. Be sure not to damage winding heads during servicing.
2. Keep all parts clean.
3. Do not over-tighten bolts and screws.
4. Always furnish model number and part number when ordering spare parts.
5. Refer to exploded views in Appendix 2 for exact blower construction.

Blower/Disassembly

1. Disconnect power leads.
2. Remove or separate piping and/or mufflers from unit.
3. Remove cover bolts (B14) and then cover (B13).
4. Remove impeller bolt (B10) and washers and then remove impeller.

   Note: Never pry on the edges of the impeller. Use puller, if necessary.

5. Carefully note number and location of shims (B8). Remove and set aside.

   NOTE: If disassembly was for inspection or cleaning purposes, unit may now be reassembled by reversing the above steps. If further disassembly is required (for example, for bearing replacement), the shim order may not be re-used. It will be necessary to re-shim according to the procedure shown under Assembly.

6. Remove housing bolts (B5) and remove motor assembly.

BEARING SELECTION

- All bearings used in EG&G Rotron blowers are of the double sealed variety. In addition, high temperature greases are used to prevent loss of lubrication under severe operating conditions. Select the appropriate bearings by referencing the parts list if ordering from EG&G Rotron or the parts list then selection chart (Appendix 3) when ordering from bearing supply houses.

BEARING REMOVAL

- Figures A and B show recommended methods for removing ball bearings from the motor shaft. The precautions specified for mounting bearings apply equally to the removal. Ball bearings which have been removed from the shaft should never be reinstalled. Precautions apply mainly to scoring of the shaft bearing seat when removing old bearings.

BEARING INSTALLATION

- As shown, an arbor press should be used for mounting ball bearings. The outer race of the bearing should never be subjected to the full mounting force of the arbor press, as this will cause a heavy thrust load to be applied to the balls and races before they are seated and may seriously damage or brinell the bearing. The full force of the arbor press should not be applied until it has been ascertained that the bearing is started straight and not cocked.

  Figures C and D show recommended methods for mounting ball bearings on the motor shaft. The "collar" method (Figure C) shows arbor press force applied to the inner race only of the ball bearing. The "mounting block" method (Figure D) shows force evenly applied to both bearing races (inner and outer).

  Use of bearing pullers is also an acceptable method of removing bearings. Be sure that bearing shims are replaced in the same quantity and order as removed.

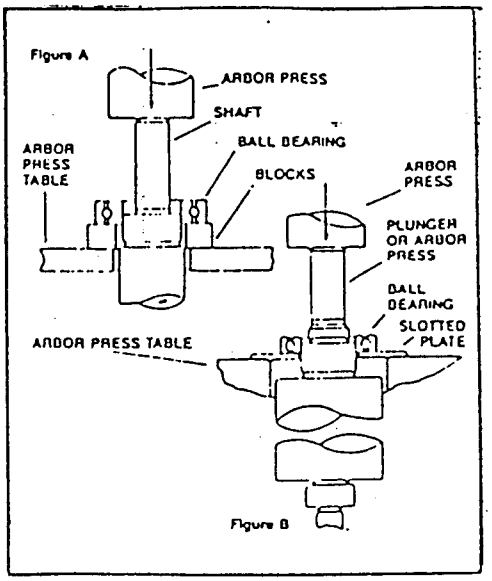

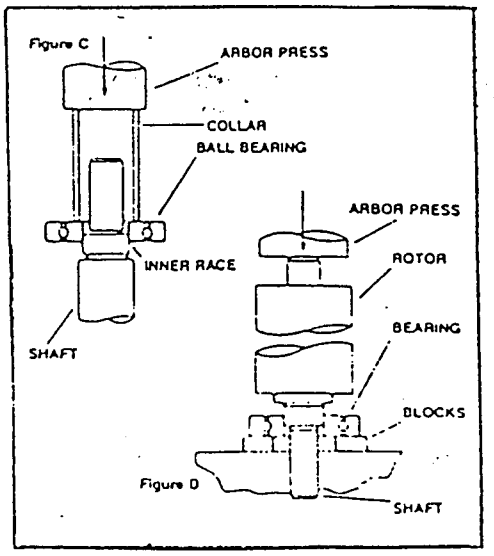

BLOWER/REASSEMBLY

1. Place assembled motor against rear of housing (B4) and fasten with bolts (B5).

2. Reshim impeller according to the procedure as outlined below.

3. Place impeller onto shaft (be sure key is in place) and fasten with bolt (B10), washer (B11 & B12) and spacer (B16) if applicable. TORQUE impeller bolt to specifications on Page 9). Once fastened spin impeller to be sure it turns freely.

4. Place cover in place and fasten with bolts (B14).

5. Reconnect power leads per motor nameplate.

IMPELLER SHIMMING PROCEDURE

Impeller Shimming and Installation Procedure

Tools Needed: Machinist's Parallel Bar
Vernier Caliper with depth measuring capability
Feeler Gauges or Depth Gauge

Goal: To center the impeller in the housing cavity.

Shimming Procedure

Measure the following: Impeller thickness
Distance from the flange face to the housing at highest point (A).
Distance from the flange face to the motor shaft shoulder (B).

Measurements (A) and (B) are made by laying the parallel bar across the housing flange face and measuring to the proper points. Each measurement should be made at three points and the average of the readings used.

If (A) = (B): Subtract the impeller thickness from (A) to get the total space remaining. Halve this number to get the shim thickness required. Install shims of that amount on the motor shaft.

If (B) is greater than (A): The motor shaft shoulder is below the level of the housing. Subtract (A) from (B) and install that thickness of shimming on the shaft so that (A) = (B). Finish shimming per (A) = (B) above.

If (A) is greater than (B): The motor shoulder is above the level of the housing. Subtract (B) from (A) and make note of the difference. Proceed per (A) = (B) above EXCEPT subtract from the shimming in (A) = (B) shims equal to the difference just noted. Install the adjusted shim amount on the shaft.

Impeller Installation and Check

With the proper shimming on the motor shaft, install the impeller and impeller bolt and washer(s). Torque the impeller bolt per the following specifications:

Bolt Size	Torque - in.-lb.	Torque - ft.-lb.
1/4 - 20	72 +/- 3	6.0 +/- .25
5/16 - 18	126 +/- 4	10.5 +/- .25
3/8 - 16	228 +/- 6	19.0 +/- .5
1/2 - 13	588 +/- 12	49.0 +/- 1
5/8 - 11	1080 +/- 24	90.0 +/- 2

Check: As a final check, the face clearance from the impeller face to the housing flange face must be measured. This is done with the feeler gauge and parallel bar or with the depth gauge. Measurements should be made at the impeller hub outer rim (at the base of the blades). Again, measure at three points and take the average. The clearance should equal one-half of the sum of the housing depth (A) minus the impeller thickness. The centering tolerance combined with the impeller runout can vary from +/- .012 on the largest blowers.

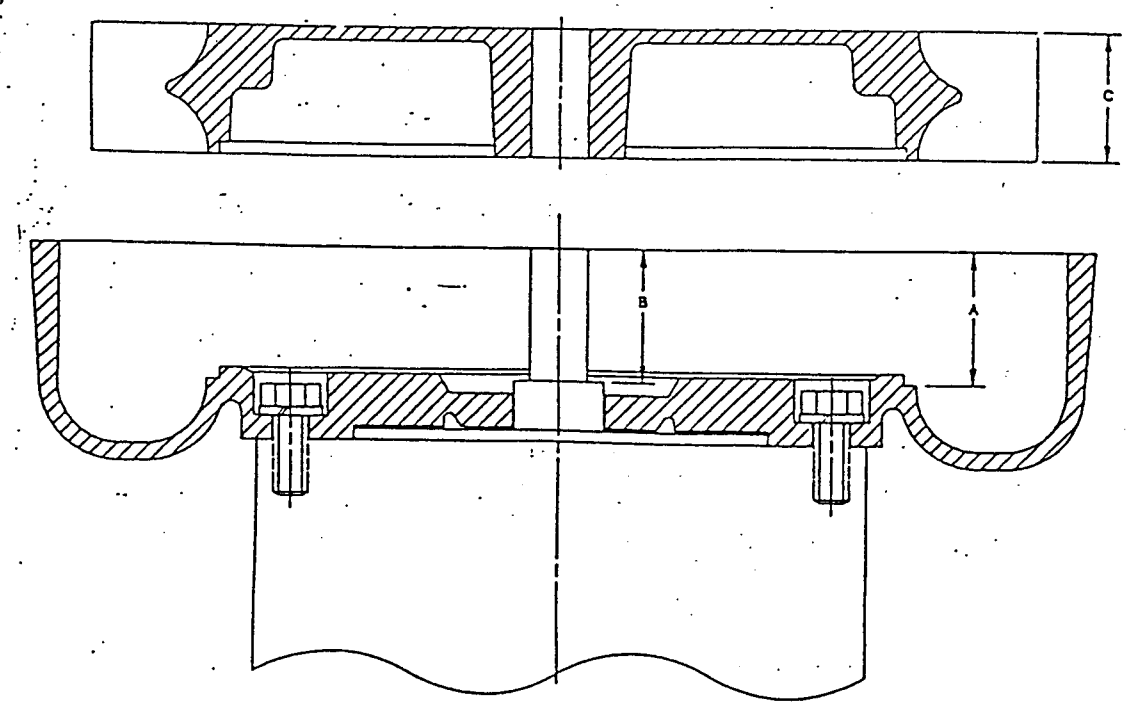

MUFFLER REPLACEMENT*

1. Remove manifold cover bolts (B2) and manifold cover (B7).
2. Muffler assembly can now be removed and replaced if necessary.
3. Reassemble by reversing Step 1 above.

*NOTE: On DR068 models with tubular mufflers, it is necessary to disassemble blower from the impeller end to remove muffler material. Please see Disassembly/Reassembly instructions on previous pages.

APPENDIX I: WIRING DIAGRAMS

Recommended Wiring Schematic for XP Motors

Diagram F

SINGLE PHASE CONNECTION DIAGRAM

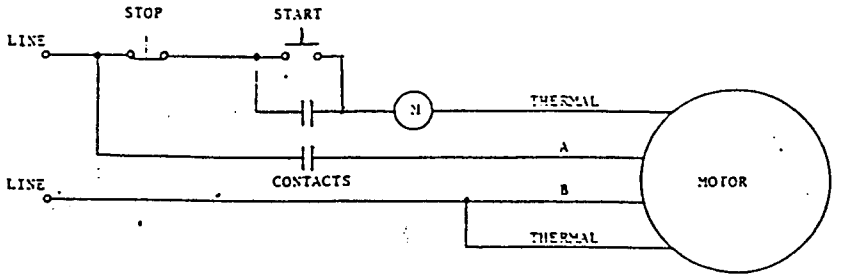

	115 V, 6 WIRE	230 V, 6 WIRE	115 V, 7 WIRE	230 V, 7 WIRE
A	1-3-5	1	1-3	1
B	2-4-6	4-8	2-4-8	4-8
TIE		2-3-5	5-9	2-3,5-9

Diagram G

THREE PHASE CONNECTION DIAGRAM

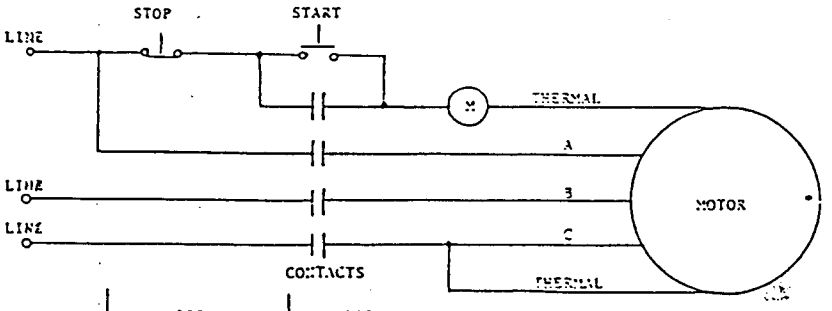

	230 V	460 V
A	1-7	1
B	2-8	2
C	3-9	3
TIE	4-5-6	7-4,8-5,9-6

Wiring this explosion-proof blower correctly is essential. Connecting the Pilot Duty Thermal Overload Protection to the proper control circuitry is mandated by UL674 and NEC501. Failure to do so may result in an explosion, and voids EG&G Rotron's warranty. Please contact the Application Engineering Department at the factory if you have any questions.

ASSEMBLY DIAGRAM
DRX RAIL MOUNT BLOWERS

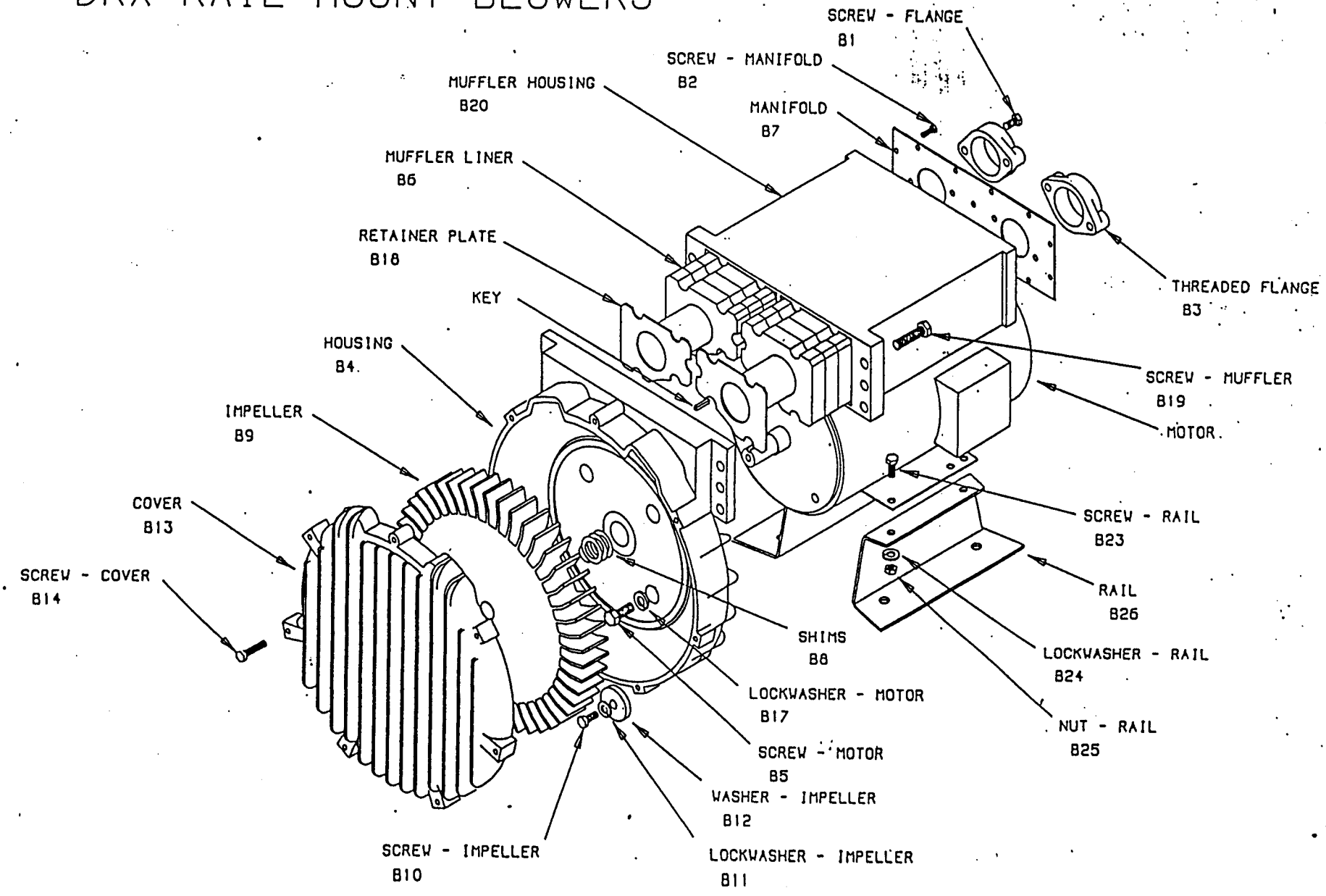

APPENDIX 3

BEARING TYPES AND LUBRICANTS

All Rotron regenerative blowers* supplied with direct fitted motors are designed with ABEC1 quality double sealed ball bearings in the motor. The bearing design in all cases is a C3 fit. Below is our recommended chart by bearing part number.

Part No.	Size	Shielded/Sealed	Grease	Heat Stabilized
510217 510218 510219	205 206 207	Double Seal Polyacrylic	NYE RHEOTEMP 500 30% +/- 5% fill	Yes 325 deg.
510449 516440 516648	203 202 307	Double Seal (BUNA N)	Shell Dolium "R" or Chevron SR1-2 25-40% fill	No
516840 516841 516842 516843 516844 516845 516846 516847	206 207 208 210 309 310 311 313	Double Seal (BUNA N)	Shell Dolium "R" or Chevron SR1-2 30% +/- 5% fill	No

*NOTE: Change to larger HP motors occurred in late 1986. Some motors sold in 1987 may have old double shield design bearings.

PARTS LIST

Wiring Diagram No.: G

EN8BD72WL
038185

Item No.	Qty Req'd	Description		Parts Breakdown
M1	1	Bearing, Rear		516840
M2	1	Bearing, Impeller End		516844
M3	1	Key		511532
B1	4	Screw, Flange	1/2 - 13 X 1 3/4"	155025
B2	17	Screw, Manifold	1/4 - 20 X 1"	120325
B3	2	Flange		511614
		Screen, Flange Guard		Not Used
B4	1	Housing		516764
B5	4	Screw, Housing to Motor	1/2 - 13 X 3¼"	155034
B6	38	Muffler Material		515405
	2	Matting, Fiberglass		516662
B7	1	Manifold Plate		523433
B8	*	Shim	.002"	511547
	*	Shim	.005"	511548
	*	Shim	.010"	511549
	*	Shim	.020"	511550
B9	1	Impeller		515249
B10	1	Bolt, Impeller	1/2 - 13 X 1¼"	120210
B11	1	Lockwasher, Impeller	1/2"	251788
B12	1	Washer, Impeller	1/2"	511529
B13	1	Cover		517814
B14	8	Screw, Cover/Hsg	3/8 - 16 X 2"	140016
B15	1	Eye Bolt		140019
B16	1	Spacer, Impeller Bolt		515555
	1**	Shaft Sleeve		Not Used
B17		Lockwasher, Housing		Not Used
B18	1	Screen, Muffler Retaining,	Right ***	515603
	1	Screen, Muffler Retaining,	Left ***	515604
B19	6	Bolt, Muffler Hsg to Hsg	1/2 - 13 X 1 3/4"	155025
B20	1	Muffler Housing		517820
		Muffler, Discrete		Not Used
B21		Heat Slinger		Not Used
B22		Guard, Heat Slinger		Not Used
B23	4	Bolt, Rail	3/8 - 16 X 1"	120007
B24	4	Lockwasher, Rail	3/8"	251787
B25	4	Nut, Rail	3/8 - 16	251789
B26	2	Rail, Mounting		595301
	1	Lip Seal, Shaft/Hsg		516693
	1	Motor, Complete		515556

* As Needed
** If Used
*** Viewed Looking at the Inlet/Outlet Ports

VENT-SCRUB™

Air
Purification
Systems

Emissions control made easy.

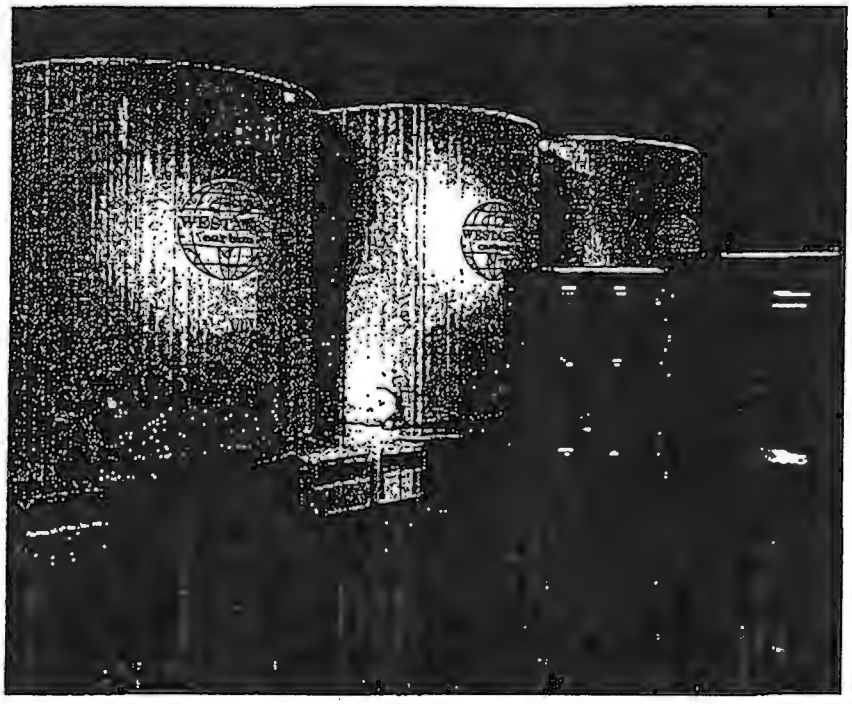

Save time and money with our Vent-Scrub™ ready-for-use systems.

Ideal for applications ranging up to 2,000 CFM, Westates Vent-Scrub adsorbers have proven to be the simplest and most economical means of solving malodorous and VOC emission problems.

Readily available in warehouses across the country, Vent-Scrubs are quickly and easily installed on any hard, flat surface. The only hardware needed is properly sized pipe or ducting–rigid or flexible–for connection to the inlet/outlet ports.

Our OSHA-trained personnel provide prompt, convenient field service and spent carbon changeout.

To minimize carbon service and reactivation costs, Vent-Scrubs ensure full adsorption by utilizing unique, state-of-the-art air distribution systems. Operating costs are further kept to a minimum via the low pressure drop characteristics typical of Westates systems.

Rugged steel construction.

All Vent-Scrub adsorbers feature specially designed internal and external coatings to resist the severe corrosive damage caused by the combination of activated carbon and volatile organic contaminants.

Manufactured per DOT 56 and rated for transporting hazardous waste, Vent-Scrubs are easily accessed for service, on or off site.

Our total-service package includes equipment sizing and modeling, activated carbon analysis in our own facilities, on-site carbon changeout, plus spent carbon removal and reactivation.

For more information on all our products and services, contact your Westates representative or call 800 659-1771.

NORTHWEST REGION
510-639-7274

Wheelabrator Clean Air Systems Inc
Westates Carbon Products

VSC-200

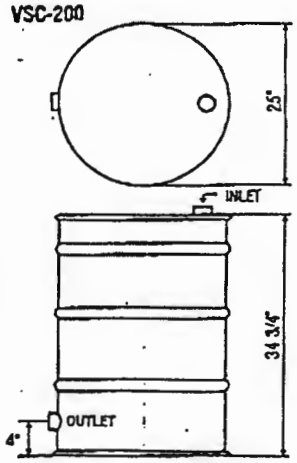

VSC-400

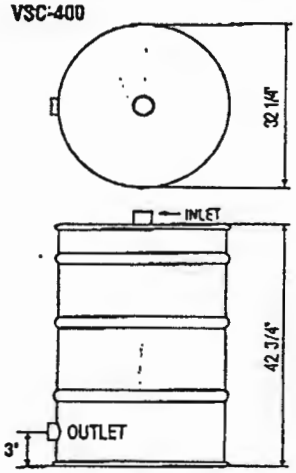

VSC-1200/VSC-2000

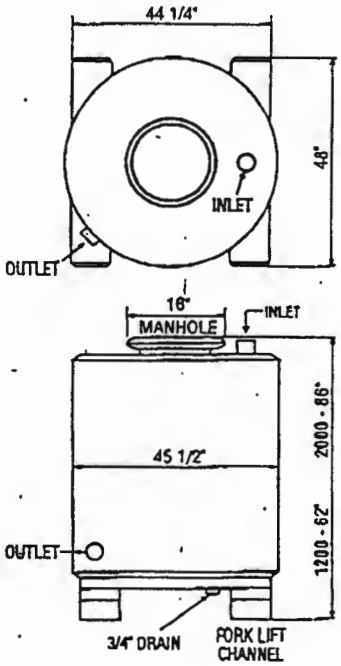

Vessel Specifications	VSC-200-2	VSC-400-4	VSC-1200/ VSC-2000	VSC-8000[1]
Inlet Connection	2" FNPT	4" O.D. sleeve	4" FNPT	12" flange
Outlet Connection	2" FNPT	4" O.D. sleeve	4" FNPT	12" flange
Manhole	Top	Top	16" Top	20" top & side
Internal Distribution	Polypro-pylene	Polypro-pylene	PVC	Polypro-pylene
Interior Coating	Cured epoxy	Baked enamel	Fusion-bonded epoxy	Fusion-bonded epoxy
Exterior Top Coating	Enamel	Enamel	Polyester urethane	Polyester urethane
Carbon Fill Volume (cu. ft.)	5.2	10.5	35/57	270
Cross Sectional Area (sq. ft.)	2.8	4.9	11.2	44.2
Vessel Weight (lbs.):				
Shipping Weight With CC-601 Carbon	215	440	1620/2340	3600[2]

[1]For VSC-8000 information, contact your WCAS representative.
[2]The VSC-8000 ships without carbon installed. Operating weight is 11600 lbs.

Operating Specifications				
Flow, cfm (max.)	100	300	500	2500
Pressure, psig (max.)	12	5	12	5
Vacuum, psig (max.)	9	N/A	6	N/A
Temperature °F. (max.)	120	120	120	120

Activated Carbon Specifications[1]		
General Applications		
Westates Carbon Model No.	CC-601	
Size	U.S. Sieve 4x8	
Type	Coconut Shell	
Special Applications		
Westates Carbon Model Nos.	KP-601	KG-601
Size	4mm Pellet Extrusion	U.S. Sieve 4x6/4x8
Type	Bituminous Coal	Bituminous Coal

[1]For assistance in selecting the proper carbon for your application, see our VOCarb specification sheet or contact your WCAS representative.

Pressure Drop

VSC-200

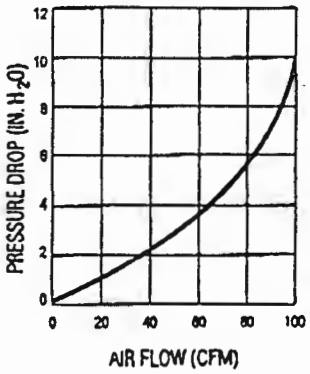

VSC-400/1200/2000

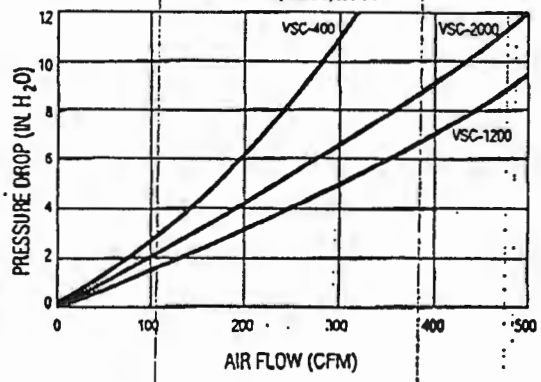

All information presented herein is believed reliable and in accordance with accepted engineering practice. Wheelabrator makes no warranties as to completeness of information. Users are responsible for evaluating individual product suitability for specific applications. Wheelabrator assumes no liability whatsoever for any special, indirect or consequential damages arising from the sale, resale or misuse of its products.

Wheelabrator Clean Air Systems Inc
Westates Carbon Products

2130 Leo Avenue, Los Angeles, California 90040-1635 213 722-7500 Fax 213 722-8207

VENT-SCRUB™
VSC-1200 and VSC-2000
Installation and Start-Up Instructions

IMPORTANT: Read all instructions prior to start-up

VENT-SCRUB™'s have been designed for easy and rapid installation. Final installation requires the connection of the VENT-SCRUB™ to the process outlet through the use of suitable pipes, ducts, or flexible hoses. Inlet and outlet isolation valves should be installed. The following instructions must be followed prior to system start-up.

1. Place the VENT-SCRUB™ unit in an area close to the problem odor or vapor source, and accessible to maintenance personnel. The VENT-SCRUB™ is self supporting and therefore requires no special stand or support pad. The area chosen for locating the VENT-SCRUB™ unit should be level, flat and capable of supporting its weight.

2. Remove VENT-SCRUB™'s protective shipping plugs from inlet and outlet and save for future storage and shipping.

3. Connect the VENT-SCRUB™ to a suitable pipe, duct or flexible hose at the inlet of the vessel. The VENT-SCRUB™ is designed to operate under positive pressure. Please refer other applications to Westates.

4. For outdoor applications, the VENT-SCRUB™ discharge should be equipped with a "U"-tube or rain hat to prevent water from entering the unit. If flammable vapors are being adsorbed flame arresters should be installed at the inlet of the VENT-SCRUB™. Consult your Westates sales representative for product selection.

5. All adsorption processes are exothermic in nature (liberate heat) and care must be exercised to ensure that excess heat does not build up in the VENT-SCRUB™ unit during start-up and operation. In applications where low air flow and high concentrations of volatile organics are being treated, care must be taken to prevent overheating. If this type of application is anticipated or if the exit gas temperature from a VENT-SCRUB™ should ever exceed 150°F, a Westates representative should be contacted for recommended precautions.

6. Procedures for installing a VENT-SCRUB™ equipped with any of Westates' impregnated carbons are similar to the procedures outlined above. When using UOCH-KP and UOCH-KG impregnated carbons, a moist air stream (>85% R.H.) is required to insure proper functioning of the carbons. It may be necessary to humidify the air stream entering the VENT-SCRUB™ when using these products. Upon initial contact with air, type UOCH-KP impregnated activated carbon may produce heat which can be dissipated by the normal system air-flow. This is a normal occurrence; however, the system temperature should be continuously monitored during this initialization period and the exit air temperature should not be allowed to exceed 150°F. If the exit temperature exceeds this value, a Westates representative should be contacted immediately.

   Once a VENT-SCRUB™ containing UOCH-KP or UOCH-KG has been installed, the unit must be commissioned immediately following the procedures listed in paragraph 7. Fan operation must begin immediately and continue for a minimum of 7 days.

10-05-1994 02:37PM Westates Carbon Oakland 1 510 639 7762 P.05

Wheelabrator Clean Air Systems Inc.
Westates Carbon Products

VENT-SCRUB™
VSC-1200 and VSC-2000
Installation and Start-Up Instructions

IMPORTANT: Read all instructions prior to start-up

7. Some odor control systems are designed for continuous service, while others are installed for intermittent use. In either case the following commissioning procedures should be adhered to:
   1. Verify that all manway, ducting, and flanges are properly attached and otherwise sealed.
   2. If applicable, verify that all drain and sample port valves are closed.
   3. Check the fan motor and verify that the fan is rotating properly.
   4. Turn the fan on and adjust the flow rate to the correct system design level.
   5. Once the system has been turned on, continue fan operation for a **minimum** of seven (7) days before shutting down. The fan must remain on continuously for this entire period to provide an uninterrupted air flow.
8. Once on-line, the VENT-SCRUB™ will continue to remove odors and vapors with little or no maintenance, until the carbon is spent. Contact Westates for information on removal and regeneration of spent carbon.

CONNECTION SIZES

	SIZES	LOCATION
Inlet	4" FNPT	Top
Outlet	4" FNPT	Lower Side

OPERATING CONDITIONS

	OPTIMUM	MAXIMUM	
		VSC-1200	VSC-2000
Vapor Flow Rate	0-500 cfm	500 scfm	500 scfm
Vapor Temperature	77°F	120°F	120°F
System Pressure	-	12 psig	12 psig
Vacuum	-	15 in. Hg	12 in. Hg
Carbon Fill Volume	-	35 cu.ft.	57 cu.ft.
Shipping weight (approximate)	-	1,600 lbs.	2,350 lbs.

FOR ADDITIONAL INFORMATION PLEASE CONTACT
ONE FOR THE FOLLOWING OFFICES:

Los Angeles, CA
(213) 722-7500

Oakland, CA
(510) 639-7274

Houston, TX
(713) 640-1278

New Castle, DE
(302) 324-4333

*** OFFICE COPY ***

WESTATES CARBON, INC.
2130 LEO AVE.
LOS ANGELES, CA. 90040-1634
(213)722-7500

ISOTHERM REPORT CREATED ON 08/29/94 AT 11:08 BY KEITH
CUSTOMER: ENGINEERING-SCIENCE
DAVE MYERS

VAPOR PHASE DESIGN PARAMETERS
****

Temperature of the System [oC].....	48.900
Total Flow Rate of Air [SCFM].....	240.000
Pressure [psia]	14.700

VAPOR PHASE DESIGN
****

Component	Conc [ppm]	Q [WT %]	#GAC/day
DICHLOROETHENE,1,1-	27.000	3.0231	83.400
TRICHLOROETHANE,1,1,1-	82.000	13.3321	78.990
TETRACHLOROETHENE	1400.000	~~55.4318~~ 30	~~403.200~~ 745
TRIMETHYLBENZENE,1,3,5-	7.300	23.0730	3.661
			~910 lbs/day

TOTAL CARBON NEEDED
****

~~996.19~~ #GAC/day (TOTAL HAS BEEN MULTIPLIED BY A FACTOR OF 1.75)

* Modelling indicates a GAC requirement of ~910 lbs/day

* The PCE loading (Q) has been adjusted to better reflect actual loading. We would expect loading to be around 25-30% PCE based on the above flow and concentration.

* 1,1 DCE has the lowest carbon loading at 3%, 1,1,1 TCA is next at 13% and PCE has the highest loading at 25-30%. As concentrations drop so will the loading of organics.

(Q is % loading or lbs of organics adsorbed / 100 lbs carbon)

VENT-SCRUB™

Air
Purification
Systems

Emissions control made easy.

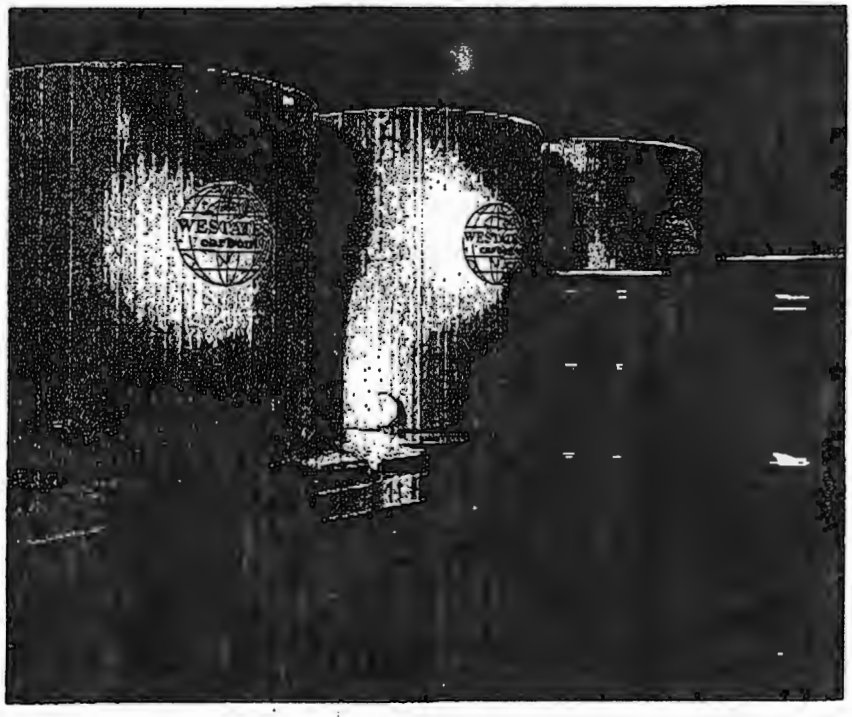

Save time and money with our Vent-Scrub™ ready-for-use systems.

Ideal for applications ranging up to 2,000 CFM, Westates Vent-Scrub adsorbers have proven to be the simplest and most economical means of solving malodorous and VOC emission problems.

Readily available in warehouses across the country, Vent-Scrubs are quickly and easily installed on any hard, flat surface. The only hardware needed is properly sized pipe or ducting–rigid or flexible–for connection to the inlet/outlet ports.

Our OSHA-trained personnel provide prompt, convenient field service and spent carbon changeout.

To minimize carbon service and reactivation costs, Vent-Scrubs ensure full adsorption by utilizing unique, state-of-the-art air distribution systems. Operating costs are further kept to a minimum via the low pressure drop characteristics typical of Westates systems.

Rugged steel construction.

All Vent-Scrub adsorbers feature specially designed internal and external coatings to resist the severe corrosive damage caused by the combination of activated carbon and volatile organic contaminants.

Manufactured per DOT 56 and rated for transporting hazardous waste, Vent-Scrubs are easily accessed for service, on- or off site.

Our total-service package includes equipment sizing and modeling, activated carbon analysis in our own facilities, on-site carbon changeout, plus spent carbon removal and reactivation.

For more information on all our products and services, contact your Westates representative or call 800 659-1771.

NORTHWEST REGION
510-639-7274

Wheelabrator Clean Air Systems Inc.
Westates Carbon Products

VSC-200

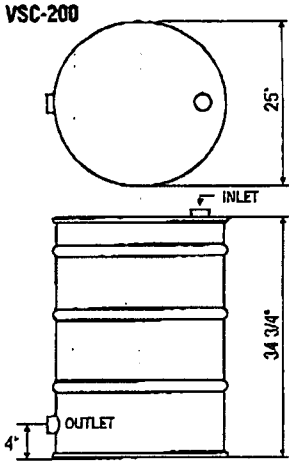

VSC-400

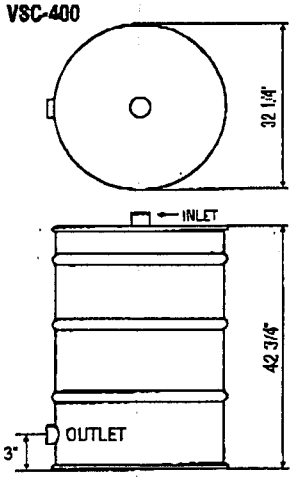

VSC-1200/VSC-2000

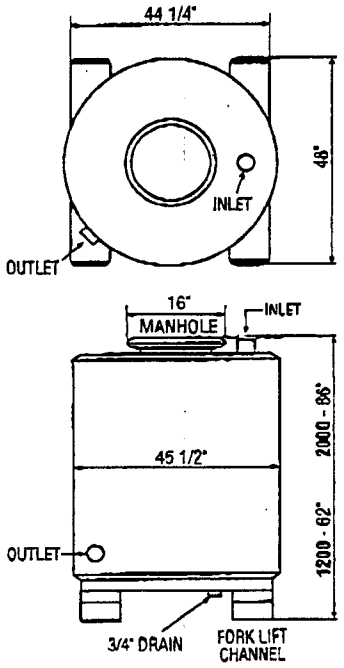

Vessel Specifications	VSC-200-2	VSC-400-4	VSC-1200/ VSC-2000	VSC-8000[1]
Inlet Connection	2" FNPT	4" O.D. sleeve	4" FNPT	12" flange
Outlet Connection	2" FNPT	4" O.D. sleeve	4" FNPT	12" flange
Manhole	Top	Top	16" Top	20" top & side
Internal Distribution	Polypro-pylene	Polypro-pylene	PVC	Polypro-pylene
Interior Coating	Cured epoxy	Baked enamel	Fusion-bonded epoxy	Fusion-bonded epoxy
Exterior Top Coating	Enamel	Enamel	Polyester urethane	Polyester urethane
Carbon Fill Volume (cu. ft.)	5.2	10.5	35/57	270
Cross Sectional Area (sq. ft.)	2.8	4.9	11.2	44.2
Vessel Weight (lbs.): Shipping Weight With CC-601 Carbon	215	440	1620/2340	3600[2]

[1]For VSC-8000 information, contact your WCAS representative.
[2]The VSC-8000 ships without carbon installed. Operating weight is 11600 lbs.

Operating Specifications

Flow, cfm (max.)	100	300	500	2500
Pressure, psig (max.)	12	5	12	5
Vacuum, psig (max.)	9	N/A	6	N/A
Temperature °F. (max.)	120	120	120	120

Activated Carbon Specifications[1]

General Applications

Westates Carbon Model No.	CC-601	
Size	U.S. Sieve 4x8	
Type	Coconut Shell	

Special Applications

Westates Carbon Model Nos.	KP-601	KG-601
Size	4mm Pellet Extrusion	U.S. Sieve 4x6/4x8
Type	Bituminous Coal	Bituminous Coal

[1]For assistance in selecting the proper carbon for your application, see our VOCarb specification sheet or contact your WCAS representative.

Pressure Drop

VSC-200

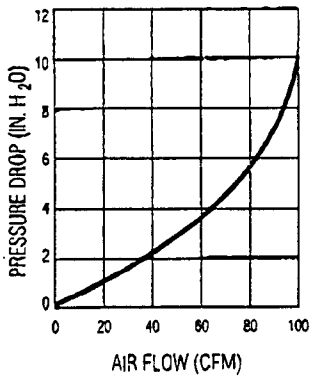

VSC-400/1200/2000

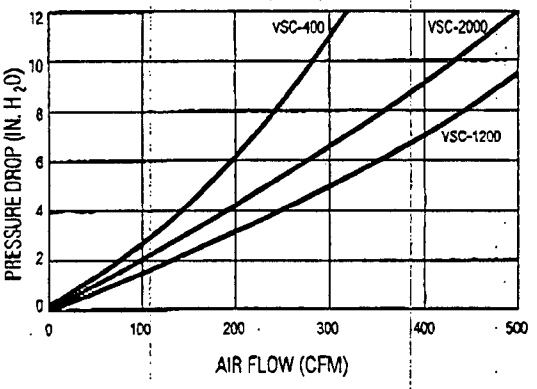

All information presented herein is believed reliable and in accordance with accepted engineering practice. Wheelabrator makes no warranties as to completeness of information. Users are responsible for evaluating individual product suitability for specific applications. Wheelabrator assumes no liability whatsoever for any special, indirect or consequential damages arising from the sale, resale or misuse of its products.

Wheelabrator Clean Air Systems Inc.
Westates Carbon Products

2130 Leo Avenue, Los Angeles, California 90040-1635 213 722-7500 Fax 213 722-8207

A WHEELABRATOR TECHNOLOGIES COMPANY

PN2007 294

10-05-1994 02:48PM westates Carbon Oakland 1 510 639 7762 P.04

VENT-SCRUB™
VSC-1200 and VSC-2000
Installation and Start-Up Instructions

IMPORTANT: Read all instructions prior to start-up

VENT-SCRUB™'s have been designed for easy and rapid installation. Final installation requires the connection of the VENT-SCRUB™ to the process outlet through the use of suitable pipes, ducts, or flexible hoses. Inlet and outlet isolation valves should be installed. The following instructions must be followed prior to system start-up.

1. Place the VENT-SCRUB™ unit in an area close to the problem odor or vapor source, and accessible to maintenance personnel. The VENT-SCRUB™ is self supporting and therefore requires no special stand or support pad. The area chosen for locating the VENT-SCRUB™ unit should be level, flat and capable of supporting its weight.

2. **Remove** VENT-SCRUB™'s protective shipping plugs from inlet and outlet and **save** for future storage and shipping.

3. Connect the VENT-SCRUB™ to a suitable pipe, duct or flexible hose at the inlet of the vessel. The VENT-SCRUB™ is designed to operate under positive pressure. Please refer other applications to Westates.

4. For outdoor applications, the VENT-SCRUB™ discharge should be equipped with a "U"-tube or rain hat to prevent water from entering the unit. If **flammable vapors are being adsorbed flame arresters should be installed at the inlet of the VENT-SCRUB™.** Consult your Westates sales representative for product selection.

5. All adsorption processes are exothermic in nature (liberate heat) and care must be exercised to ensure that excess heat does not build up in the VENT-SCRUB™ unit during start-up and operation. In applications where low air flow and high concentrations of volatile organics are being treated, care must be taken to prevent overheating. If this type of application is anticipated or if the exit gas temperature from a VENT-SCRUB™ should ever exceed 150°F, a Westates representative should be contacted for recommended precautions.

6. Procedures for installing a VENT-SCRUB™ equipped with any of Westates' impregnated carbons are similar to the procedures outlined above. When using UOCH-KP and UOCH-KG impregnated carbons, a moist air stream (>85% R.H.) is required to insure proper functioning of the carbons. It may be necessary to humidify the air stream entering the VENT-SCRUB™ when using these products. Upon initial contact with air, type UOCH-KP impregnated activated carbon may produce heat which can be dissipated by the normal system air-flow. This is a normal occurrence; however, the system temperature should be continuously monitored during this initialization period and the exit air temperature should not be allowed to exceed 150°F. If the exit temperature exceeds this value, a Westates representative should be contacted immediately.

   Once a VENT-SCRUB™ containing UOCH-KP or UOCH-KG has been installed, the unit must be commissioned immediately following the procedures listed in paragraph 7. Fan operation must begin immediately and continue for a minimum of 7 days.

10-05-1994 02:48PM Westates Carbon Oakland 1 510 639 7762 P.05

Wheelabrator Clean Air Systems Inc.
Westates Carbon Products

VENT-SCRUB™
VSC-1200 and VSC-2000
Installation and Start-Up Instructions

IMPORTANT: Read all instructions prior to start-up

7. Some odor control systems are designed for continuous service, while others are installed for intermittent use. In either case the following commissioning procedures should be adhered to:
   1. Verify that all manway, ducting, and flanges are properly attached and otherwise sealed.
   2. If applicable, verify that all drain and sample port valves are closed.
   3. Check the fan motor and verify that the fan is rotating properly.
   4. Turn the fan on and adjust the flow rate to the correct system design level.
   5. Once the system has been turned on, continue fan operation for a **minimum of seven (7) days** before shutting down. The fan must remain on continuously for this entire period to provide an uninterrupted air flow.
8. Once on-line, the VENT-SCRUB™ will continue to remove odors and vapors with little or no maintenance, until the carbon is spent. Contact Westates for information on removal and regeneration of spent carbon.

CONNECTION SIZES

	SIZES	LOCATION
Inlet	4" FNPT	Top
Outlet	4" FNPT	Lower Side

OPERATING CONDITIONS

	OPTIMUM	MAXIMUM	
		VSC-1200	VSC-2000
Vapor Flow Rate	0-500 cfm	500 scfm	500 scfm
Vapor Temperature	77°F	120°F	120°F
System Pressure	-	12 psig	12 psig
Vacuum	-	15 in. Hg	12 in. Hg
Carbon Fill Volume	-	35 cu.ft.	57 cu.ft.
Shipping weight (approximate)	-	1,600 lbs.	2,350 lbs.

FOR ADDITIONAL INFORMATION PLEASE CONTACT
ONE FOR THE FOLLOWING OFFICES:

Los Angeles, CA
(213) 722-7500

Oakland, CA
(510) 639-7274

Houston, TX
(713) 640-1278

New Castle, DE
(302) 324-4333

*** OFFICE COPY ***

WESTATES CARBON, INC.
2130 LEO AVE.
LOS ANGELES, CA. 90040-1634
(213)722-7500

ISOTHERM REPORT CREATED ON 08/29/94 AT 11:08 BY KEITH
CUSTOMER: ENGINEERING-SCIENCE
DAVE MYERS

VAPOR PHASE DESIGN PARAMETERS
****

Temperature of the System [oC].....	48.900
Total Flow Rate of Air [SCFM].....	240.000
Pressure [psia]	14.700

VAPOR PHASE DESIGN
****

Component	Conc [ppm]	Q [WT %]	#GAC/day
DICHLOROETHENE,1,1-	27.000	3.0231	83.400
TRICHLOROETHANE,1,1,1-	82.000	13.3321	78.990
TETRACHLOROETHENE	1400.000	~~55.4318~~ 30	~~403.200~~ 745
TRIMETHYLBENZENE,1,3,5-	7.300	23.0730	3.661
			~910 lbs/day

TOTAL CARBON NEEDED
****

~~996.19~~ #GAC/day (TOTAL HAS BEEN MULTIPLIED BY A FACTOR OF 1.75)

* Modelling indicates a GAC requirement of ~910 lbs/day

* The PCE loading (Q) has been adjusted to better reflect actual loading. We would expect loading to be around 25-30% PCE based on the above flow and concentration.

* 1,1 DCE has the lowest carbon loading at 3%, 1,1,1 TCA is next at 13% and PCE has the highest loading at 25-30%. As concentrations drop so will the loading of organics.

(Q is % loading or lbs of organics adsorbed/100 lbs carbon)

ATTACHMENT 3

SVE AND AIR STRIPPER AIR DISCHARGE PERMIT

City of Albuquerque
P.O. BOX 1293 ALBUQUERQUE, NEW MEXICO 87103

March 16, 1994
CERTIFIED MAIL #P 077 872 704

Ms. Nancy Norem
Senior Engineer
Public Service Co. of New Mexico
Alvarado Square
Albuquerque, NM 87158

Dear Ms. Norem:

Re: PERMIT APPLICATION - #353 AIR STRIPPING / VAPOR EXTRACTION AND TREATMENT SYSTEM

This letter constitutes a permit to Public Service Co. of New Mexico (PNM) pursuant to Section 74-2-7 NMSA 1978 and Albuquerque/Bernalillo County Air Quality Control Regulation (AQCR) 20, *Authority-to-Construct Permits;* to construct and operate an air stripping / vapor extraction and treatment system at Person Generating Station at Broadway and Rio Bravo S.E. in accordance with the application received January 10, 1994.

The Division has performed an analysis to verify the emissions from the facility and dispersion modeling to determine the impact on the ambient air. Based on this analysis and the control measures described in your application, the Division has determined that the provisions of the Air Quality Control Act, the Albuquerque/ Bernalillo County Air Quality Control Regulations and Federal, State and Local regulations and ambient air quality standards will be met. However, in order to assure this, the following conditions have been placed on the permit.

1. Total emissions from all sources at the site shall not exceed 0.75 pound per hour of non-methane hydrocarbons including no more than 0.375 pounds per hour of 111-TCA, 0.375 pounds per hour of PCE and 0.003 pounds. per hour of 11-DCE.

2. All roadways, loading and unloading areas and other areas used by vehicles within or associated with the site, shall be watered and/or otherwise treated to prevent fugitive dust emissions.

3. If the total disturbed area of the site exceeds 0.75 acres a topsoil disturbance permit must be secured, pursuant to Regulation 8 of the Albuquerque/Bernalillo County Air Quality Control Board

Section 74-2-7 "J" NMSA 1978, states that the issuance of a permit does not relieve any person from the responsibility of complying with the provisions of the Air Quality Control Act and any applicable regulations of the board. Any conditions placed upon a permit by the Department shall be enforceable to the same extent as a regulation of the Board.

Section 76-2-7 "K" NMSA 1978, provides that if the Division issues a permit with conditions, and if the applicant is dissatisfied with the action taken by the Division, the applicant may

request a hearing before the Albuquerque/Bernalillo County Air Quality Control Board. The request must be made in writing to the Director of the Environmental Health Department within thirty days after the receipt of the permit.

AQCR 20.09 provides that the Division may cancel this permit if the construction is not commenced within one year from the date of issuance, or if during the construction work is suspended for a total of one year.

AQCR 20.10 requires the permitted source to notify the Division in writing of:

A. The anticipated date of the initial start-up of a source not less than thirty days prior to the projected date;

B. actual date of initial start-up of a source within fifteen days after the start-up date;

C. change of owner or operator within fifteen (15) days of any such change, if any.

D. an updated emissions inventory for the source together with descriptions of any reconfigurations of process technology and air pollution control equipment, every two years from the date of issuance of this permit. A letter indicating that no such change has occurred, if such is the case, shall be sufficient to comply with this requirement.

AQCR 20.11 requires a performance test conducted within sixty days after achieving maximum production, but not later than 180 days after initial start-up. The department shall be notified at least two weeks prior to the test so that our observer can be present during the test. For the purposes of this permit the department is requesting 2 (two) tests of the emissions from this site. The first should be performed during the initial few days of operation to determine maximum emission potential and the second should be performed after the site has stabilized into its long-term emissions configuration.

The permit and conditions apply in the event of any change in control or ownership of the facility. In the event of any such change in control or ownership, the permittee should notify the succeeding owner of the permit and conditions.

Thank you very much for your cooperation with the Division. If you have any questions, please feel free to call me at 768-1957.

Approved and issued this 16th day of March, 1994.

Sincerely,

Roger A. Polisar
Environmental Health Specialist II
Air Pollution Control Division

RAP/gld
cc: File
Permit file
Reading file

ATTACHMENT 4

PHASE I
SVE SOIL GAS ANALYTICAL RESULTS

9408213 Engineering Science

AIR TOXICS LTD.

SAMPLE NAME: VW-1
ID#: 9408213-01A
EPA METHOD TO-14 GC/MS Full Scan

File Name:	9082413	Date of Collection:	8/23/94
Dil. Factor:	12000	Date of Analysis:	8/24/94

Compound	Det. Limit (ppbv)	Amount (ppbv)
Freon 12	6000	Not Detected
Freon 114	6000	Not Detected
Chloromethane	6000	Not Detected
Vinyl Chloride	6000	Not Detected
Bromomethane	6000	Not Detected
Chloroethane	6000	Not Detected
Freon 11	6000	Not Detected
1,1-Dichloroethene	6000	27000
Freon 113	6000	Not Detected
Methylene Chloride	6000	Not Detected
1,1-Dichloroethane	6000	Not Detected
cis-1,2-Dichloroethene	6000	Not Detected
Chloroform	6000	Not Detected
1,1,1-Trichloroethane	6000	82000
Carbon Tetrachloride	6000	Not Detected
Benzene	6000	Not Detected
1,2-Dichloroethane	6000	Not Detected
Trichloroethene	6000	Not Detected
1,2-Dichloropropane	6000	Not Detected
cis-1,3-Dichloropropene	6000	Not Detected
Toluene	6000	Not Detected
trans-1,3-Dichloropropene	6000	Not Detected
1,1,2-Trichloroethane	6000	Not Detected
Tetrachloroethene	6000	1400000
Ethylene Dibromide	6000	Not Detected
Chlorobenzene	6000	Not Detected
Ethyl Benzene	6000	Not Detected
m,p-Xylene	6000	Not Detected
o-Xylene	6000	Not Detected
Styrene	6000	Not Detected
1,1,2,2-Tetrachloroethane	6000	Not Detected
1,3,5-Trimethylbenzene	6000	Not Detected
1,2,4-Trimethylbenzene	6000	7300
1,3-Dichlorobenzene	6000	Not Detected
1,4-Dichlorobenzene	6000	Not Detected
Chlorotoluene	6000	Not Detected
1,2-Dichlorobenzene	6000	Not Detected
1,2,4-Trichlorobenzene	6000	Not Detected
Hexachlorobutadiene	6000	Not Detected

Container Type: 1 Liter SUMMA Canister

Surrogates	% Recovery	Method Limits
Octafluorotoluene	103	70-130
Toluene-d8	109	70-130
4-Bromofluorobenzene	104	70-130

AIR TOXICS LTD.

SAMPLE NAME: GAC-1
ID#: 9408213-02A
EPA METHOD TO-14 GC/MS Full Scan

File Name:	5082414	Date of Collection:	8/23/94
Dil. Factor:	9.7	Date of Analysis:	8/24/94

Compound	Det. Limit (ppbv)	Amount (ppbv)
Freon 12	4.9	Not Detected
Freon 114	4.9	Not Detected
Chloromethane	4.9	Not Detected
Vinyl Chloride	4.9	Not Detected
Bromomethane	4.9	Not Detected
Chloroethane	4.9	Not Detected
Freon 11	4.9	Not Detected
1,1-Dichloroethene	4.9	Not Detected
Freon 113	4.9	Not Detected
Methylene Chloride	4.9	Not Detected
1,1-Dichloroethane	4.9	Not Detected
cis-1,2-Dichloroethene	4.9	Not Detected
Chloroform	4.9	Not Detected
1,1,1-Trichloroethane	4.9	Not Detected
Carbon Tetrachloride	4.9	Not Detected
Benzene	4.9	Not Detected
1,2-Dichloroethane	4.9	Not Detected
Trichloroethene	4.9	Not Detected
1,2-Dichloropropane	4.9	Not Detected
cis-1,3-Dichloropropene	4.9	Not Detected
Toluene	4.9	Not Detected
trans-1,3-Dichloropropene	4.9	Not Detected
1,1,2-Trichloroethane	4.9	Not Detected
Tetrachloroethene	4.9	84
Ethylene Dibromide	4.9	Not Detected
Chlorobenzene	4.9	Not Detected
Ethyl Benzene	4.9	Not Detected
m,p-Xylene	4.9	Not Detected
o-Xylene	4.9	Not Detected
Styrene	4.9	Not Detected
1,1,2,2-Tetrachloroethane	4.9	Not Detected
1,3,5-Trimethylbenzene	4.9	Not Detected
1,2,4-Trimethylbenzene	4.9	Not Detected
1,3-Dichlorobenzene	4.9	Not Detected
1,4-Dichlorobenzene	4.9	Not Detected
Chlorotoluene	4.9	Not Detected
1,2-Dichlorobenzene	4.9	Not Detected
1,2,4-Trichlorobenzene	4.9	Not Detected
Hexachlorobutadiene	4.9	Not Detected

Container Type: 1 Liter SUMMA Canister

Surrogates	% Recovery	Method Limits
Octafluorotoluene	106	70-130
Toluene-d8	106	70-130
4-Bromofluorobenzene	103	70-130

AIR TOXICS LTD.

SAMPLE NAME: PSNM3-1
ID#: 9408213-03A
EPA METHOD TO-14 GC/MS Full Scan

File Name:	5082415	Date of Collection:	8/23/94
Dil. Factor:	4800	Date of Analysis:	8/24/94

Compound	Det. Limit (ppbv)	Amount (ppbv)
Freon 12	2400	Not Detected
Freon 114	2400	Not Detected
Chloromethane	2400	Not Detected
Vinyl Chloride	2400	Not Detected
Bromomethane	2400	Not Detected
Chloroethane	2400	Not Detected
Freon 11	2400	Not Detected
1,1-Dichloroethene	2400	66000
Freon 113	2400	Not Detected
Methylene Chloride	2400	Not Detected
1,1-Dichloroethane	2400	Not Detected
cis-1,2-Dichloroethene	2400	Not Detected
Chloroform	2400	Not Detected
1,1,1-Trichloroethane	2400	69000
Carbon Tetrachloride	2400	Not Detected
Benzene	2400	Not Detected
1,2-Dichloroethane	2400	Not Detected
Trichloroethene	2400	Not Detected
1,2-Dichloropropane	2400	Not Detected
cis-1,3-Dichloropropene	2400	Not Detected
Toluene	2400	Not Detected
trans-1,3-Dichloropropene	2400	Not Detected
1,1,2-Trichloroethane	2400	Not Detected
Tetrachloroethene	2400	570000
Ethylene Dibromide	2400	Not Detected
Chlorobenzene	2400	Not Detected
Ethyl Benzene	2400	Not Detected
m,p-Xylene	2400	Not Detected
o-Xylene	2400	Not Detected
Styrene	2400	Not Detected
1,1,2,2-Tetrachloroethane	2400	Not Detected
1,3,5-Trimethylbenzene	2400	Not Detected
1,2,4-Trimethylbenzene	2400	Not Detected
1,3-Dichlorobenzene	2400	Not Detected
1,4-Dichlorobenzene	2400	Not Detected
Chlorotoluene	2400	Not Detected
1,2-Dichlorobenzene	2400	Not Detected
1,2,4-Trichlorobenzene	2400	Not Detected
Hexachlorobutadiene	2400	Not Detected

Container Type: 1 Liter SUMMA Canister

Surrogates	% Recovery	Method Limits
Octafluorotoluene	104	70-130
Toluene-d8	105	70-130
4-Bromofluorobenzene	97	70-130

AIR TOXICS LTD.

SAMPLE NAME: SG1-1
ID#: 9408213-04A
EPA METHOD TO-14 GC/MS Full Scan

File Name:	5082416	Date of Collection:	8/23/94
Dil. Factor:	770	Date of Analysis:	8/24/94

Compound	Det. Limit (ppbv)	Amount (ppbv)
Freon 12	390	Not Detected
Freon 114	390	Not Detected
Chloromethane	390	Not Detected
Vinyl Chloride	390	Not Detected
Bromomethane	390	Not Detected
Chloroethane	390	Not Detected
Freon 11	390	Not Detected
1,1-Dichloroethene	390	1800
Freon 113	390	Not Detected
Methylene Chloride	390	Not Detected
1,1-Dichloroethane	390	Not Detected
cis-1,2-Dichloroethene	390	Not Detected
Chloroform	390	Not Detected
1,1,1-Trichloroethane	390	5700
Carbon Tetrachloride	390	Not Detected
Benzene	390	Not Detected
1,2-Dichloroethane	390	Not Detected
Trichloroethene	390	Not Detected
1,2-Dichloropropane	390	Not Detected
cis-1,3-Dichloropropene	390	Not Detected
Toluene	390	Not Detected
trans-1,3-Dichloropropene	390	Not Detected
1,1,2-Trichloroethane	390	Not Detected
Tetrachloroethene	390	100000
Ethylene Dibromide	390	Not Detected
Chlorobenzene	390	Not Detected
Ethyl Benzene	390	Not Detected
m,p-Xylene	390	Not Detected
o-Xylene	390	Not Detected
Styrene	390	Not Detected
1,1,2,2-Tetrachloroethane	390	Not Detected
1,3,5-Trimethylbenzene	390	Not Detected
1,2,4-Trimethylbenzene	390	Not Detected
1,3-Dichlorobenzene	390	Not Detected
1,4-Dichlorobenzene	390	Not Detected
Chlorotoluene	390	Not Detected
1,2-Dichlorobenzene	390	Not Detected
1,2,4-Trichlorobenzene	390	Not Detected
Hexachlorobutadiene	390	Not Detected

Container Type: 1 Liter SUMMA Canister

Surrogates	% Recovery	Method Limits
Octafluorotoluene	111	70-130
Toluene-d8	107	70-130
4-Bromofluorobenzene	96	70-130

AIR TOXICS LTD.

SAMPLE NAME: Lab Blank
ID#: 9408213-05A
EPA METHOD TO-14 GC/MS Full Scan

File Name:	5082406	Date of Collection:	NA
Dil. Factor:	1.0	Date of Analysis:	8/24/94

Compound	Det. Limit (ppbv)	Amount (ppbv)
Freon 12	0.50	Not Detected
Freon 114	0.50	Not Detected
Chloromethane	0.50	Not Detected
Vinyl Chloride	0.50	Not Detected
Bromomethane	0.50	Not Detected
Chloroethane	0.50	Not Detected
Freon 11	0.50	Not Detected
1,1-Dichloroethene	0.50	Not Detected
Freon 113	0.50	Not Detected
Methylene Chloride	0.50	Not Detected
1,1-Dichloroethane	0.50	Not Detected
cis-1,2-Dichloroethene	0.50	Not Detected
Chloroform	0.50	Not Detected
1,1,1-Trichloroethane	0.50	Not Detected
Carbon Tetrachloride	0.50	Not Detected
Benzene	0.50	Not Detected
1,2-Dichloroethane	0.50	Not Detected
Trichloroethene	0.50	Not Detected
1,2-Dichloropropane	0.50	Not Detected
cis-1,3-Dichloropropene	0.50	Not Detected
Toluene	0.50	Not Detected
trans-1,3-Dichloropropene	0.50	Not Detected
1,1,2-Trichloroethane	0.50	Not Detected
Tetrachloroethene	0.50	Not Detected
Ethylene Dibromide	0.50	Not Detected
Chlorobenzene	0.50	Not Detected
Ethyl Benzene	0.50	Not Detected
m,p-Xylene	0.50	Not Detected
o-Xylene	0.50	Not Detected
Styrene	0.50	Not Detected
1,1,2,2-Tetrachloroethane	0.50	Not Detected
1,3,5-Trimethylbenzene	0.50	Not Detected
1,2,4-Trimethylbenzene	0.50	Not Detected
1,3-Dichlorobenzene	0.50	Not Detected
1,4-Dichlorobenzene	0.50	Not Detected
Chlorotoluene	0.50	Not Detected
1,2-Dichlorobenzene	0.50	Not Detected
1,2,4-Trichlorobenzene	0.50	Not Detected
Hexachlorobutadiene	0.50	Not Detected

Container Type: NA

Surrogates	% Recovery	Method Limits
Octafluorotoluene	107	70-130
Toluene-d8	105	70-130
4-Bromofluorobenzene	95	70-130

180 [illegible] E R[illegible] E R[illegible] B
FOLSOM, CA 95630-4719
(916) 985-1000 FAX: (916) 985-1020

AIR TOXICS LTD.

AN ENVIRONMENTAL ANALYTICAL LABORATORY

№ 001660

CHAIN-OF-CUSTODY RECORD

Page 1 of 1

Contact Person: John Hall
Company: Engineering-Science Inc
Address: 1700 Broadway #900 City: Denver State: CO Zip: 80290
Phone: (303) 831-8100 FAX: (303) 831 8208

Project Info:
P.O. #: 722445.01000
Project #: 722445.01000
Project Name: PSNM-Person

Turn Around Time:
☐ Normal
☒ Rush 24-48 Specify

Lab I.D.	Field Sample I.D.	Date & Time	Analyses Requested	Canister Pressure / Vacuum Initial	Final	Receipt
01A	VW-1	8/23/94 11:25	TO-14 Canister 11628			5.0" Hg
02A	GAC-1	8/23/94 11:27	TO-14 Canister 9472			5.0" Hg
03A	PSNM3-1	8/23/94 08:40	TO-14 9473			5.0" Hg
04A	SG1-1	8/23/94 08:46	TO-14 12807			5.5" Hg

Collected By: Print: John Hall
Signature: John Hall

Relinquished By: (Signature) Date/Time: 8/23/94 16:00
Received By: (Signature) Date/Time: 8/23/94 16:00 Fed Ex #1968962181

Relinquished By: (Signature) Date/Time:
Received By: (Signature) Date/Time:

Relinquished By: (Signature) Date/Time:
Received By: (Signature) Date/Time: 0955 8/24/94

Notes: Fax Results to Gary Baker (505) 877-3396
HARD Copy to John Hall - Grand Jct. CO 635 MEADOWWOOD ST 81504
Bill - Denver Address

Lab Use Only	Shipper Name	Air Bill #	Opened By:	Date/Time	Temp. (°C)	Condition	Custody Seals Intact?	Work Order #
	FED EX	1968962181	TAS	8/24/94 0955	Room	GOOD	Yes No None	

1293 rev. 05

AIR TOXICS LTD.

SAMPLE NAME: VW-2
ID#: 9408224-01A
EPA METHOD TO-14 GC/MS Full Scan

File Name:	5082512	Date of Collection:	8/24/94
Dil. Factor:	9700	Date of Analysis:	8/25/94

Compound	Det. Limit (ppbv)	Amount (ppbv)
Freon 12	4900	Not Detected
Freon 114	4900	Not Detected
Chloromethane	4900	Not Detected
Vinyl Chloride	4900	Not Detected
Bromomethane	4900	Not Detected
Chloroethane	4900	Not Detected
Freon 11	4900	Not Detected
1,1-Dichloroethene	4900	29000
Freon 113	4900	Not Detected
Methylene Chloride	4900	Not Detected
1,1-Dichloroethane	4900	Not Detected
cis-1,2-Dichloroethene	4900	Not Detected
Chloroform	4900	Not Detected
1,1,1-Trichloroethane	4900	41000
Carbon Tetrachloride	4900	Not Detected
Benzene	4900	Not Detected
1,2-Dichloroethane	4900	Not Detected
Trichloroethene	4900	Not Detected
1,2-Dichloropropane	4900	Not Detected
cis-1,3-Dichloropropene	4900	Not Detected
Toluene	4900	Not Detected
trans-1,3-Dichloropropene	4900	Not Detected
1,1,2-Trichloroethane	4900	Not Detected
Tetrachloroethene	4900	880000
Ethylene Dibromide	4900	Not Detected
Chlorobenzene	4900	Not Detected
Ethyl Benzene	4900	Not Detected
m,p-Xylene	4900	Not Detected
o-Xylene	4900	Not Detected
Styrene	4900	Not Detected
1,1,2,2-Tetrachloroethane	4900	Not Detected
1,3,5-Trimethylbenzene	4900	Not Detected
1,2,4-Trimethylbenzene	4900	Not Detected
1,3-Dichlorobenzene	4900	Not Detected
1,4-Dichlorobenzene	4900	Not Detected
Chlorotoluene	4900	Not Detected
1,2-Dichlorobenzene	4900	Not Detected
1,2,4-Trichlorobenzene	4900	Not Detected
Hexachlorobutadiene	4900	Not Detected

Container Type: 1 Liter SUMMA Canister

Surrogates	% Recovery	Method Limits
Octafluorotoluene	114	70-130
Toluene-d8	107	70-130
4-Bromofluorobenzene	96	70-130

AIR TOXICS LTD.

SAMPLE NAME: GAC-2
ID#: 9408224-02A
EPA METHOD TO-14 GC/MS Full Scan

File Name:	5082513	Date of Collection:	8/24/94
Dil. Factor:	10	Date of Analysis:	8/25/94

Compound	Det. Limit (ppbv)	Amount (ppbv)
Freon 12	5.0	Not Detected
Freon 114	5.0	Not Detected
Chloromethane	5.0	Not Detected
Vinyl Chloride	5.0	Not Detected
Bromomethane	5.0	Not Detected
Chloroethane	5.0	Not Detected
Freon 11	5.0	Not Detected
1,1-Dichloroethene	5.0	Not Detected
Freon 113	5.0	Not Detected
Methylene Chloride	5.0	Not Detected
1,1-Dichloroethane	5.0	Not Detected
cis-1,2-Dichloroethene	5.0	Not Detected
Chloroform	5.0	Not Detected
1,1,1-Trichloroethane	5.0	Not Detected
Carbon Tetrachloride	5.0	Not Detected
Benzene	5.0	Not Detected
1,2-Dichloroethane	5.0	Not Detected
Trichloroethene	5.0	Not Detected
1,2-Dichloropropane	5.0	Not Detected
cis-1,3-Dichloropropene	5.0	Not Detected
Toluene	5.0	Not Detected
trans-1,3-Dichloropropene	5.0	Not Detected
1,1,2-Trichloroethane	5.0	Not Detected
Tetrachloroethene	5.0	Not Detected
Ethylene Dibromide	5.0	Not Detected
Chlorobenzene	5.0	Not Detected
Ethyl Benzene	5.0	Not Detected
m,p-Xylene	5.0	Not Detected
o-Xylene	5.0	Not Detected
Styrene	5.0	Not Detected
1,1,2,2-Tetrachloroethane	5.0	Not Detected
1,3,5-Trimethylbenzene	5.0	Not Detected
1,2,4-Trimethylbenzene	5.0	Not Detected
1,3-Dichlorobenzene	5.0	Not Detected
1,4-Dichlorobenzene	5.0	Not Detected
Chlorotoluene	5.0	Not Detected
1,2-Dichlorobenzene	5.0	Not Detected
1,2,4-Trichlorobenzene	5.0	Not Detected
Hexachlorobutadiene	5.0	Not Detected

Container Type: 1 Liter SUMMA Canister

Surrogates	% Recovery	Method Limits
Octafluorotoluene	101	70-130
Toluene-d8	110	70-130
4-Bromofluorobenzene	100	70-130

AIR TOXICS LTD.

SAMPLE NAME: Lab Blank
ID#: 9408224-03A
EPA METHOD TO-14 GC/MS Full Scan

File Name:	5082510	Date of Collection:	NA
Dil. Factor:	1.0	Date of Analysis:	8/25/94

Compound	Det. Limit (ppbv)	Amount (ppbv)
Freon 12	0.50	Not Detected
Freon 114	0.50	Not Detected
Chloromethane	0.50	Not Detected
Vinyl Chloride	0.50	Not Detected
Bromomethane	0.50	Not Detected
Chloroethane	0.50	Not Detected
Freon 11	0.50	Not Detected
1,1-Dichloroethene	0.50	Not Detected
Freon 113	0.50	Not Detected
Methylene Chloride	0.50	Not Detected
1,1-Dichloroethane	0.50	Not Detected
cis-1,2-Dichloroethene	0.50	Not Detected
Chloroform	0.50	Not Detected
1,1,1-Trichloroethane	0.50	Not Detected
Carbon Tetrachloride	0.50	Not Detected
Benzene	0.50	Not Detected
1,2-Dichloroethane	0.50	Not Detected
Trichloroethene	0.50	Not Detected
1,2-Dichloropropane	0.50	Not Detected
cis-1,3-Dichloropropene	0.50	Not Detected
Toluene	0.50	Not Detected
trans-1,3-Dichloropropene	0.50	Not Detected
1,1,2-Trichloroethane	0.50	Not Detected
Tetrachloroethene	0.50	Not Detected
Ethylene Dibromide	0.50	Not Detected
Chlorobenzene	0.50	Not Detected
Ethyl Benzene	0.50	Not Detected
m,p-Xylene	0.50	Not Detected
o-Xylene	0.50	Not Detected
Styrene	0.50	Not Detected
1,1,2,2-Tetrachloroethane	0.50	Not Detected
1,3,5-Trimethylbenzene	0.50	Not Detected
1,2,4-Trimethylbenzene	0.50	Not Detected
1,3-Dichlorobenzene	0.50	Not Detected
1,4-Dichlorobenzene	0.50	Not Detected
Chlorotoluene	0.50	Not Detected
1,2-Dichlorobenzene	0.50	Not Detected
1,2,4-Trichlorobenzene	0.50	Not Detected
Hexachlorobutadiene	0.50	Not Detected

Container Type: NA

Surrogates	% Recovery	Method Limits
Octafluorotoluene	101	70-130
Toluene-d8	100	70-130
4-Bromofluorobenzene	93	70-130

AIR TOXICS LTD.
AN ENVIRONMENTAL ANALYTICAL LABORATORY

180 BLUE RAVINE ROAD,
FOLSOM, CA 95630-4719
(916) 985-1000 FAX: (916) 985-1020

№ 001664

CHAIN-OF-CUSTODY RECORD

Page 1 of 1

Contact Person: JOHN HALL
Company: ENGINEERING-SCIENCE, INC
Address: ~~DENVER~~ 1700 BROADWAY City: ~~CO~~ DENVER State: CO Zip: 80290
Phone: 303 831-8100 FAX: (303) 831-8208

Project Info:
P.O. #: 722445.01000
Project #: 722445.01000
Project Name: PSNM-PERSON

Turn Around Time:
☒ Normal
☒ Rush 24 hr (Specify)

Lab I.D.	Field Sample I.D.	Date & Time	Analyses Requested	Canister Pressure / Vacuum Initial	Final	Receipt
01A	VW-2	8/24/94 0828	TO-14 Con. No 11825 RUSH			5.0" Hg
02A	GAC-2	8/24/94 0840	TO-14 11822 RUSH			6.0" Hg
	BAC-1	8/24/94 0846	TO-14 13897 Normal			
	EB-1	8/24/94 0850	TO-14 9493 Normal			

Collected By: Print JOHN HALL Signature [signature]

Relinquished By: (Signature) Date/Time [signature] 8/24/94 18:00 — Received By: (Signature) Date/Time Fed Ex #1968962192 8/24/94 18:00

Relinquished By: (Signature) Date/Time — Received By: (Signature) Date/Time

Relinquished By: (Signature) Date/Time — Received By: (Signature) Date/Time [signature] AIR 8/25/94 1015

Notes: Fax Results to Gary Baker (505) 877-3396
Hard Copy JOHN HALL
635 MEADOWOOD ST.
GRAND JUNCTION, CO 81504
Billing - Denver Address

Lab Use Only

Shipper Name	Air Bill #	Opened By:	Date/Time	Temp. (°C)	Condition	Custody Seals Intact?	Work Order #
FED. EX.	1968962192	TBS.	8/25 1015	Room	Good	Yes No None	9408224

293 rev. 05

AIR TOXICS LTD.

SAMPLE NAME: VW-3
ID#: 9408239-01A
EPA METHOD TO-14 GC/MS Full Scan

File Name:	1082817	Date of Collection:	8/25/94
Dil. Factor:	6000	Date of Analysis:	8/28/94

Compound	Det. Limit (ppbv)	Amount (ppbv)
Freon 12	3000	Not Detected
Freon 114	3000	Not Detected
Chloromethane	3000	Not Detected
Vinyl Chloride	3000	Not Detected
Bromomethane	3000	Not Detected
Chloroethane	3000	Not Detected
Freon 11	3000	Not Detected
1,1-Dichloroethene	3000	40000
Freon 113	3000	Not Detected
Methylene Chloride	3000	Not Detected
1,1-Dichloroethane	3000	Not Detected
cis-1,2-Dichloroethene	3000	Not Detected
Chloroform	3000	Not Detected
1,1,1-Trichloroethane	3000	45000
Carbon Tetrachloride	3000	Not Detected
Benzene	3000	Not Detected
1,2-Dichloroethane	3000	Not Detected
Trichloroethene	3000	Not Detected
1,2-Dichloropropane	3000	Not Detected
cis-1,3-Dichloropropene	3000	Not Detected
Toluene	3000	Not Detected
trans-1,3-Dichloropropene	3000	Not Detected
1,1,2-Trichloroethane	3000	Not Detected
Tetrachloroethene	3000	1100000 E
Ethylene Dibromide	3000	Not Detected
Chlorobenzene	3000	Not Detected
Ethyl Benzene	3000	Not Detected
m,p-Xylene	3000	Not Detected
o-Xylene	3000	Not Detected
Styrene	3000	Not Detected
1,1,2,2-Tetrachloroethane	3000	Not Detected
1,3,5-Trimethylbenzene	3000	3000
1,2,4-Trimethylbenzene	3000	5400
1,3-Dichlorobenzene	3000	Not Detected
1,4-Dichlorobenzene	3000	Not Detected
Chlorotoluene	3000	Not Detected
1,2-Dichlorobenzene	3000	Not Detected
1,2,4-Trichlorobenzene	3000	Not Detected
Hexachlorobutadiene	3000	Not Detected

E = Exceeds instrument calibration range, but within linear range.

Container Type: 1 Liter SUMMA Canister

Surrogates	% Recovery	Method Limits
Octafluorotoluene	124	70-130
Toluene-d8	99	70-130
4-Bromofluorobenzene	95	70-130

AIR TOXICS LTD.

SAMPLE NAME: GAC-3
ID#: 9408239-02A
EPA METHOD TO-14 GC/MS Full Scan

File Name:	1082818	Date of Collection:	8/25/94
Dil. Factor:	2400	Date of Analysis:	8/28/94

Compound	Det. Limit (ppbv)	Amount (ppbv)
Freon 12	1200	Not Detected
Freon 114	1200	Not Detected
Chloromethane	1200	Not Detected
Vinyl Chloride	1200	Not Detected
Bromomethane	1200	Not Detected
Chloroethane	1200	Not Detected
Freon 11	1200	Not Detected
1,1-Dichloroethene	1200	60000
Freon 113	1200	Not Detected
Methylene Chloride	1200	Not Detected
1,1-Dichloroethane	1200	Not Detected
cis-1,2-Dichloroethene	1200	Not Detected
Chloroform	1200	1200
1,1,1-Trichloroethane	1200	120000
Carbon Tetrachloride	1200	Not Detected
Benzene	1200	Not Detected
1,2-Dichloroethane	1200	Not Detected
Trichloroethene	1200	1600
1,2-Dichloropropane	1200	Not Detected
cis-1,3-Dichloropropene	1200	Not Detected
Toluene	1200	Not Detected
trans-1,3-Dichloropropene	1200	Not Detected
1,1,2-Trichloroethane	1200	Not Detected
Tetrachloroethene	1200	340000
Ethylene Dibromide	1200	Not Detected
Chlorobenzene	1200	Not Detected
Ethyl Benzene	1200	Not Detected
m,p-Xylene	1200	Not Detected
o-Xylene	1200	Not Detected
Styrene	1200	Not Detected
1,1,2,2-Tetrachloroethane	1200	Not Detected
1,3,5-Trimethylbenzene	1200	Not Detected
1,2,4-Trimethylbenzene	1200	Not Detected
1,3-Dichlorobenzene	1200	Not Detected
1,4-Dichlorobenzene	1200	Not Detected
Chlorotoluene	1200	Not Detected
1,2-Dichlorobenzene	1200	Not Detected
1,2,4-Trichlorobenzene	1200	Not Detected
Hexachlorobutadiene	1200	Not Detected

Container Type: 1 Liter SUMMA Canister

Surrogates	% Recovery	Method Limits
Octafluorotoluene	112	70-130
Toluene-d8	100	70-130
4-Bromofluorobenzene	101	70-130

AIR TOXICS LTD.

SAMPLE NAME: Lab Blank
ID#: 9408239-03A
EPA METHOD TO-14 GC/MS Full Scan

File Name:	1082816	Date of Collection:	NA
Dil. Factor:	1.0	Date of Analysis:	8/28/94

Compound	Det. Limit (ppbv)	Amount (ppbv)
Freon 12	0.50	Not Detected
Freon 114	0.50	Not Detected
Chloromethane	0.50	Not Detected
Vinyl Chloride	0.50	Not Detected
Bromomethane	0.50	Not Detected
Chloroethane	0.50	Not Detected
Freon 11	0.50	Not Detected
1,1-Dichloroethene	0.50	Not Detected
Freon 113	0.50	Not Detected
Methylene Chloride	0.50	Not Detected
1,1-Dichloroethane	0.50	Not Detected
cis-1,2-Dichloroethene	0.50	Not Detected
Chloroform	0.50	Not Detected
1,1,1-Trichloroethane	0.50	Not Detected
Carbon Tetrachloride	0.50	Not Detected
Benzene	0.50	Not Detected
1,2-Dichloroethane	0.50	Not Detected
Trichloroethene	0.50	Not Detected
1,2-Dichloropropane	0.50	Not Detected
cis-1,3-Dichloropropene	0.50	Not Detected
Toluene	0.50	Not Detected
trans-1,3-Dichloropropene	0.50	Not Detected
1,1,2-Trichloroethane	0.50	Not Detected
Tetrachloroethene	0.50	Not Detected
Ethylene Dibromide	0.50	Not Detected
Chlorobenzene	0.50	Not Detected
Ethyl Benzene	0.50	Not Detected
m,p-Xylene	0.50	Not Detected
o-Xylene	0.50	Not Detected
Styrene	0.50	Not Detected
1,1,2,2-Tetrachloroethane	0.50	Not Detected
1,3,5-Trimethylbenzene	0.50	Not Detected
1,2,4-Trimethylbenzene	0.50	Not Detected
1,3-Dichlorobenzene	0.50	Not Detected
1,4-Dichlorobenzene	0.50	Not Detected
Chlorotoluene	0.50	Not Detected
1,2-Dichlorobenzene	0.50	Not Detected
1,2,4-Trichlorobenzene	0.50	Not Detected
Hexachlorobutadiene	0.50	Not Detected

Container Type: NA

Surrogates	% Recovery	Method Limits
Octafluorotoluene	112	70-130
Toluene-d8	95	70-130
4-Bromofluorobenzene	97	70-130

AIR TOXICS LTD.
AN ENVIRONMENTAL ANALYTICAL LABORATORY

180 BLUE RAVINE ROAD, SUITE B
FOLSOM, CA 95630-4719
(916) 985-1000 FAX: (916) 985-1020

№ 001661

CHAIN-OF-CUSTODY RECORD

Contact Person: JOHN HALL
Company: Engineering - Science
Address: 1700 Broadway #900 City: Denver State: CO Zip: 80290
Phone: _____ FAX: _____

Project Info:
P.O. # 722445.01000
Project # 722445.01000
Project Name: PSNH - Person

Turn Around Time:
☒ Normal
☒ Rush 24 hr (Specify)

Lab I.D.	Field Sample I.D.	Date & Time	Analyses Requested	Canister Pressure / Vacuum Initial	Final	Receipt
01A	VW-3	8/25/94 09:20	TO-14 Canister No 9491 (RUSH)			4.5"Hg
02A	GAC-3	8/25/94 09:25	TO-14 " 9442 (RUSH)			5.0"Hg
	GAC-3A	8/25/94 09:30	TO-14 " 94106 (Normal)			

Collected By: Print: GARY BAKER Signature: Gary Baker

Relinquished By: (Signature) Date/Time: Gary Baker 8/25/94 10:00AM
Received By: (Signature) Date/Time: 8/25/94 10:00AM

Relinquished By: (Signature) Date/Time: 8/25/94 12:00 FedEx #1968962166
Received By: (Signature) Date/Time: 8/25/94 12:00

Relinquished By: (Signature) Date/Time:
Received By: (Signature) Date/Time: 26 AUG 94 0931

Notes: Fax Results to Dave Meyers (303) 831-8208
Hard Copy Results: JOHN HALL
635 Meadowood St
Grand Junction, CO 81504
(303) 244-8829

Billing - Denver

Lab Use Only	Shipper Name	Air Bill #	Opened By:	Date/Time	Temp. (°C)	Condition	Custody Seals Intact?	Work Order #
	FED-X	1968962166		26AUG94 0931	ROOM	GOOD	Yes No (None)	9408239

Form 1293 rev 05

AnalyticalTechnologies,Inc.

2709-D Pan American Freeway, NE Albuquerque, NM 87107
Phone (505) 344-3777 FAX (505) 344-4413

ATI I.D. **510310**

November 1, 1995

Public Service Co of NM
Alvarado Square ER16
Albuquerque, NM 87158

Project Name/Number: (NONE)

Attention: Steve Anderson

On **10/04/95**, Analytical Technologies, Inc., (ADHS License No. AZ0015), received a request to analyze **air** sample(s). The sample(s) were analyzed with EPA methodology or equivalent methods. The results of these analyses and the quality control data, which follow each set of analyses, are enclosed.

All analyses were performed by Analytical Technologies, Inc., 11 East Olive Road, Pensacola, FL.

If you have any questions or comments, please do not hesitate to contact us at (505) 344-3777.

Kimberly D. McNeill
Project Manager

H. Mitchell Rubenstein, Ph.D.
Laboratory Manager

MR:jt

Enclosure

AnalyticalTechnologies,Inc.

CLIENT : PUBLIC SERVICE CO OF NM

PROJECT # : (NONE)

PROJECT NAME: (NONE)

DATE RECEIVED: 10/04/95

REPORT DATE : 11/01/95

ATI ID: 510310

	ATI PENSACOLA ID #	CLIENT DESCRIPTION	MATRIX	DATE COLLECTED
01	510310-01	VAPOR EXTRACTOR INFLUENT	AIR	10/04/95

---TOTALS---

MATRIX	#SAMPLES
AIR	1

ATI STANDARD DISPOSAL PRACTICE

The samples from this project will be disposed of in thirty (30) days from the date of this report. If an extended storage period is required, please contact our sample control department before the scheduled disposal date.

AnalyticalTechnologies,Inc.

"FINAL REPORT FORMAT - SINGLE"

Accession: 510137
Client: ANALYTICAL TECHNOLOGIES, INC.
Project Number: 510310
Project Name: PNS
Project Location: N/S
Test: TO14
Analysis Method: TO 14 / SIM / Compendium of Methods, EPA-600/4-87-006, June 1988.
Extraction Method: N/A
Matrix: AIR
QC Level: I

Lab Id: 001
Client Sample Id: 510310-01

Sample Date/Time: 04-OCT-95 0843
Received Date: 07-OCT-95

Batch: MAB160
Blank: A

Dry Weight %: N/A

Extraction Date: N/A
Analysis Date: 25-OCT-95

Parameter:	Units:	Results:	Rpt Lmts:	Q:
ALPHA-CHLOROTOLUENE	MG/M3	ND	1.4	
BENZENE	MG/M3	ND	1.4	
BROMOMETHANE	MG/M3	ND	1.4	
CARBON TETRACHLORIDE	MG/M3	ND	1.4	
CHLOROBENZENE	MG/M3	ND	1.4	
CHLOROETHANE	MG/M3	ND	1.4	
CHLOROFORM	MG/M3	ND	1.4	
CHLOROMETHANE	MG/M3	ND	1.4	
CIS 1,2 DICHLOROETHYLENE	MG/M3	ND	1.4	
DICHLORODIFLUOROMETHANE	MG/M3	ND	1.4	
1,1-DICHLOROETHANE	MG/M3	ND	1.4	
1,2-DICHLOROETHANE	MG/M3	ND	1.4	
1,2-DICHLOROPROPANE	MG/M3	ND	1.4	
CIS-1,3-DICHLOROPROPENE	MG/M3	ND	1.4	
TRANS-1,3-DICHLOROPROPENE	MG/M3	ND	1.4	
DICHLOROTETRAFLUOROETHANE	MG/M3	ND	1.4	
ETHYL BENZENE	MG/M3	ND	1.4	
HEXACHLOROBUTADIENE	MG/M3	ND	1.4	
M-DICHLOROBENZENE	MG/M3	ND	1.4	
M,P-XYLENE	MG/M3	ND	1.4	
METHYLENE CHLORIDE	MG/M3	ND	3.4	
O-DICHLOROBENZENE	MG/M3	ND	1.4	
O-XYLENE	MG/M3	ND	1.4	
P-DICHLOROBENZENE	MG/M3	ND	1.4	
STYRENE	MG/M3	ND	1.4	
1,1,2,2-TETRACHLOROETHANE	MG/M3	ND	1.4	
TETRACHLOROETHYLENE	MG/M3	24	1.4	
TOLUENE	MG/M3	ND	1.4	
1,1,2-TRICHLOROETHANE	MG/M3	ND	1.4	
TRICHLOROETHYLENE	MG/M3	ND	1.4	
TRICHLOROFLUOROMETHANE	MG/M3	ND	1.4	
VINYL CHLORIDE	MG/M3	ND	1.4	
1,2-DIBROMOETHANE (EDB)	MG/M3	ND	1.4	
1,2,4 TRICHLOROBENZENE	MG/M3	ND	1.4	
1,2,4-TRIMETHYLBENZENE	MG/M3	ND	1.4	
1,3,5-TRIMETHYLBENZENE	MG/M3	ND	1.4	
1,1-DICHLOROETHENE	MG/M3	13	1.4	
1,1,1-TRICHLOROETHANE	MG/M3	6.2	1.4	

AnalyticalTechnologies,Inc.

"FINAL REPORT FORMAT - SINGLE"

Accession:	510137
Client:	ANALYTICAL TECHNOLOGIES, INC.
Project Number:	510310
Project Name:	PNS
Project Location:	N/S
Test:	TO14
Analysis Method:	TO 14 / SIM / Compendium of Methods, EPA-600/4-87-006, June 1988.
Extraction Method:	N/A
Matrix:	AIR
QC Level:	I

Lab Id:	001	Sample Date/Time:	04-OCT-95 0843
Client Sample Id:	510310-01	Received Date:	07-OCT-95

Parameter:	Units:	Results:	Rpt Lmts:	Q:
TRICHLOROTRIFLUOROETHANE	MG/M3	ND	1.4	
4-ETHYLTOLUENE	MG/M3	ND	1.4	
BROMOFLUOROBENZENE	%REC/SURR	102	86-115	
1,2-DICHLOROETHANE-D4	%REC/SURR	105	76-114	
TOLUENE-D8	%REC/SURR	104	81-117	
ANALYST	INITIALS	LL		

Comments:

AnalyticalTechnologies,Inc.

"Method Report Summary"

Accession Number: 510137
Client: ANALYTICAL TECHNOLOGIES, INC.
Project Number: 510310
Project Name: PNS
Project Location: N/S
Test: TO14

Client Sample Id:	Parameter:	Unit:	Result:
510310-01	TETRACHLOROETHYLENE	MG/M3	24
	1,1-DICHLOROETHENE	MG/M3	13
	1,1,1-TRICHLOROETHANE	MG/M3	6.2

AnalyticalTechnologies,Inc.

"QC Report"

Title: Bag/Can Blank
Batch: MAB160
Analysis Method: TO 14 / SIM / Compendium of Methods, EPA-600/4-87-006, June 1988.
Extraction Method: N/A

Blank Id: A Date Analyzed: 25-OCT-95 Date Extracted: N/A

Parameters:	Units:	Results:	Reporting Limits:
ALPHA-CHLOROTOLUENE	MG/M3	ND	0.03
ACROLEIN	MG/M3	ND	1.0
ACETONE	MG/M3	ND	0.1
ACRYLONITRILE	MG/M3	ND	1.0
BENZENE	MG/M3	ND	0.03
BROMOMETHANE	MG/M3	ND	0.03
BROMOFORM	MG/M3	ND	0.03
2-BUTANONE	MG/M3	ND	0.10
BROMODICHLOROMETHANE	MG/M3	ND	0.03
CARBON TETRACHLORIDE	MG/M3	ND	0.03
CARBON DISULFIDE	MG/M3	ND	0.03
CHLOROBENZENE	MG/M3	ND	0.03
CHLOROETHANE	MG/M3	ND	0.03
CHLOROFORM	MG/M3	ND	0.03
CHLOROMETHANE	MG/M3	ND	0.03
CIS 1,2 DICHLOROETHYLENE	MG/M3	ND	0.03
TRANS 1,2 DICHLOROETHYLENE	MG/M3	ND	0.03
DICHLORODIFLUOROMETHANE	MG/M3	ND	0.03
DIBROMOCHLOROMETHANE	MG/M3	ND	0.03
1,1-DICHLOROETHANE	MG/M3	ND	0.03
1,2-DICHLOROETHANE	MG/M3	ND	0.03
1,2-DICHLOROPROPANE	MG/M3	ND	0.03
CIS-1,3-DICHLOROPROPENE	MG/M3	ND	0.03
TRANS-1,3-DICHLOROPROPENE	MG/M3	ND	0.03
DICHLOROTETRAFLUOROETHANE	MG/M3	ND	0.03
1,4-DICHLORO-2-BUTENE	MG/M3	ND	0.03
ETHYL BENZENE	MG/M3	ND	0.03
HEXACHLOROBUTADIENE	MG/M3	ND	0.03
2-HEXANONE	MG/M3	ND	0.10
M-DICHLOROBENZENE	MG/M3	ND	0.03
M,P-XYLENE	MG/M3	ND	0.03
METHYLENE CHLORIDE	MG/M3	ND	0.07
4-METHYL-2-PENTANONE	MG/M3	ND	0.10
O-DICHLOROBENZENE	MG/M3	ND	0.03
O-XYLENE	MG/M3	ND	0.03
P-DICHLOROBENZENE	MG/M3	ND	0.03
STYRENE	MG/M3	ND	0.03
1,1,2,2-TETRACHLOROETHANE	MG/M3	ND	0.03
TETRACHLOROETHYLENE	MG/M3	ND	0.03
TOLUENE	MG/M3	ND	0.03
1,1,2-TRICHLOROETHANE	MG/M3	ND	0.03
TRICHLOROETHYLENE	MG/M3	ND	0.03
TRICHLOROFLUOROMETHANE	MG/M3	ND	0.03
VINYL CHLORIDE	MG/M3	ND	0.03
VINYL ACETATE	MG/M3	ND	0.03
1,2-DIBROMOETHANE (EDB)	MG/M3	ND	0.03

AnalyticalTechnologies,Inc.

"QC Report"

Title: Bag/Can Blank
Batch: MAB160
Analysis Method: TO 14 / SIM / Compendium of Methods, EPA-600/4-87-006, June 1988.
Extraction Method: N/A

Parameters:	Units:	Results:	Reporting Limits:
1,2,4 TRICHLOROBENZENE	MG/M3	ND	0.03
1,2,4-TRIMETHYLBENZENE	MG/M3	ND	0.03
1,3,5-TRIMETHYLBENZENE	MG/M3	ND	0.03
1,1-DICHLOROETHENE	MG/M3	ND	0.03
1,1,1-TRICHLOROETHANE	MG/M3	ND	0.03
TRICHLOROTRIFLUOROETHANE	MG/M3	ND	0.03
4-ETHYLTOLUENE	MG/M3	ND	0.03
BROMOFLUOROBENZENE	%REC/SURR	104	86-115
1,2-DICHLOROETHANE-D4	%REC/SURR	112	76-114
TOLUENE-D8	%REC/SURR	99	81-117
ANALYST	INITIALS	LL	

Comments:

AnalyticalTechnologies,Inc.

"QC Report"

Title: Bag/Can Reagent
Batch: MAB160
Analysis Method: TO 14 / SIM / Compendium of Methods, EPA-600/4-87-006, June 1988.
Extraction Method: N/A

RS Date Analyzed: 25-Oct-95
RSD Date Analyzed: 25-Oct-95

RS Date Extracted: N/A
RSD Date Extracted: N/A

Parameters:	Spike Added	Sample Conc	RS Conc	RS %Rec	RSD Conc	RSD %Rec	RPD	RPD Lmts	Rec Lmts
1,1-DICHLOROETHENE	2.0	<0.03	2.1	105	1.8	90	15	20	73-123
TRICHLOROETHENE	2.0	<0.03	2.0	100	1.9	95	5	20	82-118
BENZENE	2.0	<0.03	2.0	100	1.9	95	5	20	90-123
TOLUENE	2.0	<0.03	1.8	90	1.7	85	6	20	83-124
CHLOROBENZENE	2.0	<0.03	2.0	100	1.9	95	5	20	88-126
Surrogates:									
1,2-DICHLOROETHANE-D4				98		96			76-114
TOLUENE-D8				101		104			81-117
BROMOFLUOROBENZENE				97		102			86-115

Comments:
DUE TO THE NATURE OF THE SAMPLE MATRIX, MATRIX SPIKE/MATRIX SPIKE DUPLICATE CANNOT BE ANALYZED.

Notes:
N/S = NOT SUBMITTED N/A = NOT APPLICABLE D = DILUTED OUT
MG/M3 = PARTS PER BILLION. < = LESS THAN REPORTING LIMIT.
* = VALUES OUTSIDE OF QUALITY CONTROL LIMITS.
SOURCES FOR CONTROL LIMITS ARE INTERNAL LABORATORY QUALITY ASSURANCE PROGRAM AND REFERENCED METHOD.

AnalyticalTechnologies,Inc.

Common notation for Organic reporting

N/S = NOT SUBMITTED
N/A = NOT APPLICABLE
D = DILUTED OUT
UG/L = PARTS PER BILLION.
UG/KG = PARTS PER BILLION.
MG/KG = PARTS PER MILLION.
MG/L = PARTS PER MILLION.
MG/M3 = MILLIGRAMS PER CUBIC METER.
NG = NANOGRAMS.
UG = MICROGRAMS.
PPBV = PARTS PER BILLION/VOLUME.
< = LESS THAN DETECTION LIMIT.
* = VALUES OUTSIDE OF QUALITY CONTROL LIMITS
J = THE REPORTED VALUE IS EITHER LESS THAN THE REPORTING LIMIT BUT GREATER THAN ZERO, OR QUANTITATED AS A TIC; THEREFORE, IT IS ESTIMATED.
JJ = REPORTED VALUE IS ESTIMATED DUE TO MATRIX INTERFERENCE.
ND = NOT DETECTED ABOVE REPORT LIMIT.
RPT LIMIT = REPORTING LIMITS BASED ON METHOD DETECTION LIMIT STUDIES.
RPD = RELATIVE PERCENT DIFFERENCE (OR DEVIATION)

SOURCES FOR CONTROL LIMITS ARE INTERNAL LABORATORY QUALITY ASSURANCE PROGRAM AND REFERENCED METHOD.

ORGANIC SOILS ARE REPORTED ON A DRY WEIGHT BASIS.

DUE TO THE NATURE OF THE SAMPLE MATRIX, MATRIX SPIKE/MATRIX SPIKE DUPLICATE ANALYSIS CANNOT BE PERFORMED FOR AIR ANALYSIS.

LP = LEVERNE PETERSON	RW = RITA WINGO
DWB = DAVID BOWERS	LD = LARRY DILMORE
DB = DENNIS BESON	DC = DAVID CELESTIAL
LL = LANCE LARSON	RB = RAFAEL BARRAZA
JA = JENNIFER ALEXANDER	PL = PAUL LESCHENSKY

AnalyticalTechnologies, Inc.
11 East Olive Road • Pensacola, Florida 32514 • (904) 474-1001

CHAIN OF CUSTODY

PART 1 - Bottle Shipment Information

ATI ACCESSION #: _____

CLIENT: ATI A Hydrogeologist

CLIENT PROJECT NUMBER:

QUANTITY OF SAMPLE CONTAINERS SHIPPED	PRESERVATIVE							PLASTIC CONTAINERS							GLASS CONTAINERS									NOTES
	H_2SO_4	HNO3	HCL	Zn Acetate	$Na_2S_2O_3$	Unpreserved	NaOH	8 oz.	16 oz.	32 oz.	½ gallon	1 gallon	Whirl-pak	100-ML Cup	120 ml (A)	1 liter (A)	1 liter (C)	40 ml Vial	4 oz. wm	8 oz. wm	16 oz. wm	32 oz. wm	D.I. Trip Blank	
1							6		6		4													AT 121

Relinquished By: [signature] Time: 1710 Date: 9/25/95 Received By: Dan Johnson Time: 9:02 Date: 10-4-95

PART 2 - Sample/Project Information

SAMPLE MATRIX CODES

DW DRINKING WATER
WW WASTEWATER
GW GROUNDWATER
AI AIR
SO SOIL
OI OIL
SW SURFACE WATER
SL SLUDGE
ST STORMWATER

PARAMETERS AND PRESERVATIVES REQUESTED

SAMPLE I.D.	SAMPLE DATE	SAMPLE TIME	MATRIX	TO14	TOTAL # OF BOTTLES
VAPOR Extractor Influent	10-4-95	0843	AI	X	1

Total Number of Bottles/Containers:

Relinquished By	Date	Time	Received By	Date	Time
ATI-ABQ, Dan Johnson	9-27-95	10:31	Chuck Arater	9-27-95	1031
Chuck Arater	10-4-95	0900	Dan Johnson	10-4-95	9:03

Client			Purchase Order Number
Address			Project Number
City	State	Zip	Project Name
Phone Number ( )	Fax Number ( )		Project Location
Project Manager			Sampled By

TURNAROUND TIMES	check below	SPECIAL INSTRUCTIONS
Standard - 14-21 days	✓	
RUSH (must be approved in advance)		
<- 48 hours - 2x standard price		
3-7 days - 1.5x standard price		
TCLP - 1 week rush 1.5x standard price		
QC Level none I II III IV (circle one)		Copies of report needed _____

FORM # 12694 — METRO PRINTING, INC., HUNTSVILLE, ALABAMA 35801

WHITE — LAB CANARY — REPORT PINK — CLIENT

Analytical Technologies, Inc. Albuquerque, NM

Chain of Custody 510131

DATE 10-4-95 PAGE 1 OF 1

NETWORK PROJECT MANAGER: ~~LETITIA KRAKOWSKI~~ Kim McNeill

COMPANY: Analytical Technologies, Inc.

ADDRESS: 2709-D Pan American Freeway, NE
Albuquerque, NM 87107

CLIENT PROJECT MANAGER: Kim McNeill

ANALYSIS REQUEST

SAMPLE ID	DATE	TIME	MATRIX	LAB ID	TOX	TOC	ORGANIC LEAD	SULFIDE	SURFACTANTS (MBAS)		632/632 MOD	619/619 MOD	610/8310	TO 14		8240 (TCLP 1311) ZHE		Diesel/Gasoline/BTXE/MTBE/ (MOD 8015/8020)	Volatile Organics GC/MS (624/8240)		NACE	ASBESTOS		BOD	TOTAL COLIFORM	FECAL COLIFORM		GROSS ALPHA/BETA	RADIUM 226/228		AIR - O2, CO2, METHANE	AIR/Diesel/Gasoline/BTXE/ (MOD 8015/8020)	NUMBER OF CONTAINERS
510310-01	10-4-95	8:43	Air											X																			1

PROJECT INFORMATION	SAMPLE RECEIPT	SAMPLES SENT TO:	RELINQUISHED BY: 1.	RELINQUISHED BY: 2.
PROJECT NUMBER: 510310	TOTAL NUMBER OF CONTAINERS	SAN DIEGO	Signature: Dan Johnson Time: 1700	Signature: Time:
PROJECT NAME: PSN	CHAIN OF CUSTODY SEALS	FT. COLLINS	Printed Name: Dan Johnson Date: 10/7	Printed Name: Date
QC LEVEL: (STD) IV	INTACT?	RENTON	Analytical Technologies, Inc. Albuquerque	Company:
QC REQUIRED: MS MSD BLANK	RECEIVED GOOD COND./COLD	PENSACOLA X	RECEIVED BY: (LAB) 1.	RECEIVED BY: (LAB) 2.
TAT: (STANDARD) RUSHI	LAB NUMBER	PORTLAND	Signature: Linda Kitt Time: 1000	Signature: Time:
DUE DATE: 10-16-95		PHOENIX	Printed Name: Linda Kitt Date: 10/7/95	Printed Name: Date:
RUSH SURCHARGE:		FIBERQUANT	Company: ATI / Pensacola	Company:
CLIENT DISCOUNT: 10 %				

[redacted]

ATI Labs: San Diego (619) 458-9141 • Phoenix (602) 496-4400 • Seattle (206) 228-8335 • Pensacola (904) 474-1001 • Portland (503) 684-0447 • Albuquerque (505) 344-3777 DISTRIBUTION: White, Canary - ATI • Pink - ORIGINATOR

AnalyticalTechnologies, Inc.
11 East Olive Road • Pensacola, Florida 32514 • (904) 474-1001

CHAIN OF CUSTODY

ATI ACCESSION #: 510137

PART 1 - Bottle Shipment Information

CLIENT: ATI A Hoyuizgut

CLIENT PROJECT NUMBER:

QUANTITY OF SAMPLE CONTAINERS SHIPPED	PRESERVATIVE							PLASTIC CONTAINERS							GLASS CONTAINERS									NOTES
	H_2SO_4	HNO3	HCL	Zn Acetate	$Na_2S_2O_3$	Unpreserved	NaOH	8 oz.	16 oz.	32 oz.	½ gallon	1 gallon	Whirl-pak	100-ML Cup	120 ml (A)	1 liter (A)	1 liter (C)	40 ml Vial	4 oz. wm	8 oz. wm	16 oz. wm	32 oz. wm	D.I. Trip Blank	
1																								AT 121

Relinquished By: [signature] Time: 1710 Date: 9/27/95

Received By: Dan Johnson Time: 9:00 Date: 10-4-95

PART 2 - Sample/Project Information

SAMPLE MATRIX CODES

DW DRINKING WATER
WW WASTEWATER
GW GROUNDWATER
AI AIR
SO SOIL
OI OIL
SW SURFACE WATER
SL SLUDGE
ST STORMWATER

PARAMETERS AND PRESERVATIVES REQUESTED

SAMPLE I.D.	SAMPLE DATE	SAMPLE TIME	MATRIX	TO14	TOTAL # OF BOTTLES
VAPOR Extractor Influent	10-4-95	0843	AI	X	1

Total Number of Bottles/Containers:

Relinquished By	Date	Time	Received By	Date	Time
ATI-ABQ, Dan Johnson	9-27-95	10:31	Chuck Arater	9-27-95	1031
Chuck Arater	10-4-95	0900	Dan Johnson	10-4-95	9:03
			Linda L. Fitt	10/7/95	1000

Client		Purchase Order Number
Address		Project Number
City	State	Zip	Project Name
Phone Number ( )	Fax Number ( )	Project Location
Project Manager		Sampled By

TURNAROUND TIMES	check below	SPECIAL INSTRUCTIONS
Standard - 14-21 days	✓	
RUSH (must be approved in advance)		
< - 48 hours - 2x standard price		
3-7 days - 1.5x standard price		
TCLP - 1 week rush 1.5x standard price		
QC Level none I II III IV (circle one)		Copies of report needed _____

FORM # 12694 — METRO PRINTING INC. HUNTSVILLE ALABAMA 35801

WHITE — LAB CANARY — REPORT PINK — CLIEN

AnalyticalTechnologies,Inc.

2709-D Pan American Freeway, NE Albuquerque, NM 87107
Phone (505) 344-3777 FAX (505) 344-4413

ATI I.D. **510334**

November 2, 1995

Public Service Co of NM
Alvarado Square ER16
Albuquerque, NM 87158

Project Name/Number: PERSON STATION

Attention: Steve Anderson

On **10/11/95**, Analytical Technologies, Inc., (ADHS License No. AZ0015), received a request to analyze **air** samples. The samples were analyzed with EPA methodology or equivalent methods. The results of these analyses and the quality control data, which follow each set of analyses, are enclosed.

All analyses were performed by Analytical Technologies, Inc., 11 East Olive Road, Pensacola, FL.

If you have any questions or comments, please do not hesitate to contact us at (505) 344-3777.

Kimberly D. McNeill
Project Manager

H. Mitchell Rubenstein, Ph.D.
Laboratory Manager

MR:jt

Enclosure

AnalyticalTechnologies,Inc.

CLIENT : PUBLIC SERVICE CO OF NM
PROJECT # : (NONE)
PROJECT NAME : PERSON STATION

DATE RECEIVED : 10/11/95
REPORT DATE : 11/02/95

ATI ID: 510334

	ATI PENSACOLA ID #	CLIENT DESCRIPTION	MATRIX	DATE COLLECTED
01	510334-01	VAPOR EXTRACTOR INFLUENT	AIR	10/11/95
02	510334-02	VAPOR EXTRACTOR EFFLUENT	AIR	10/11/95

---TOTALS---

MATRIX	#SAMPLES
AIR	2

ATI STANDARD DISPOSAL PRACTICE

The samples from this project will be disposed of in thirty (30) days from the date of this report. If an extended storage period is required, please contact our sample control department before the scheduled disposal date.

AnalyticalTechnologies,Inc.

"FINAL REPORT FORMAT - SINGLE"

Accession: 510229
Client: ANALYTICAL TECHNOLOGIES, INC.
Project Number: 510334
Project Name: PSN
Project Location: PERSON STATION
Test: TO14
Analysis Method: TO 14 / SIM / Compendium of Methods, EPA-600/4-87-006, June 1988.
Extraction Method: N/A
Matrix: AIR
QC Level: I

Lab Id: 001
Client Sample Id: 510334-01

Sample Date/Time: 11-OCT-95 0840
Received Date: 12-OCT-95

Batch: MAB160
Blank: A

Dry Weight %: N/A

Extraction Date: N/A
Analysis Date: 25-OCT-95

Parameter:	Units:	Results:	Rpt Lmts:	Q:
ALPHA-CHLOROTOLUENE	MG/M3	ND	1.4	
BENZENE	MG/M3	ND	1.4	
BROMOMETHANE	MG/M3	ND	1.4	
CARBON TETRACHLORIDE	MG/M3	ND	1.4	
CHLOROBENZENE	MG/M3	ND	1.4	
CHLOROETHANE	MG/M3	ND	1.4	
CHLOROFORM	MG/M3	ND	1.4	
CHLOROMETHANE	MG/M3	ND	1.4	
CIS 1,2 DICHLOROETHYLENE	MG/M3	ND	1.4	
DICHLORODIFLUOROMETHANE	MG/M3	ND	1.4	
1,1-DICHLOROETHANE	MG/M3	ND	1.4	
1,2-DICHLOROETHANE	MG/M3	ND	1.4	
1,2-DICHLOROPROPANE	MG/M3	ND	1.4	
CIS-1,3-DICHLOROPROPENE	MG/M3	ND	1.4	
TRANS-1,3-DICHLOROPROPENE	MG/M3	ND	1.4	
DICHLOROTETRAFLUOROETHANE	MG/M3	ND	1.4	
ETHYL BENZENE	MG/M3	ND	1.4	
HEXACHLOROBUTADIENE	MG/M3	ND	1.4	
M-DICHLOROBENZENE	MG/M3	ND	1.4	
M,P-XYLENE	MG/M3	ND	1.4	
METHYLENE CHLORIDE	MG/M3	ND	3.2	
O-DICHLOROBENZENE	MG/M3	ND	1.4	
O-XYLENE	MG/M3	ND	1.4	
P-DICHLOROBENZENE	MG/M3	ND	1.4	
STYRENE	MG/M3	ND	1.4	
1,1,2,2-TETRACHLOROETHANE	MG/M3	ND	1.4	
TETRACHLOROETHYLENE	MG/M3	20	1.4	
TOLUENE	MG/M3	ND	1.4	
1,1,2-TRICHLOROETHANE	MG/M3	ND	1.4	
TRICHLOROETHYLENE	MG/M3	ND	1.4	
TRICHLOROFLUOROMETHANE	MG/M3	ND	1.4	
VINYL CHLORIDE	MG/M3	ND	1.4	
1,2-DIBROMOETHANE (EDB)	MG/M3	ND	1.4	
1,2,4 TRICHLOROBENZENE	MG/M3	ND	1.4	
1,2,4-TRIMETHYLBENZENE	MG/M3	ND	1.4	
1,3,5-TRIMETHYLBENZENE	MG/M3	ND	1.4	
1,1-DICHLOROETHENE	MG/M3	10	1.4	
1,1,1-TRICHLOROETHANE	MG/M3	4.7	1.4	

AnalyticalTechnologies,Inc.

"FINAL REPORT FORMAT - SINGLE"

Accession: 510229
Client: ANALYTICAL TECHNOLOGIES, INC.
Project Number: 510334
Project Name: PSN
Project Location: PERSON STATION
Test: TO14
Analysis Method: TO 14 / SIM / Compendium of Methods, EPA-600/4-87-006, June 1988.
Extraction Method: N/A
Matrix: AIR
QC Level: I

Lab Id: 001
Client Sample Id: 510334-01
Sample Date/Time: 11-OCT-95 0840
Received Date: 12-OCT-95

Parameter:	Units:	Results:	Rpt Lmts:	Q:
TRICHLOROTRIFLUOROETHANE	MG/M3	ND	1.4	
4-ETHYLTOLUENE	MG/M3	ND	1.4	
BROMOFLUOROBENZENE	%REC/SURR	102	86-115	
1,2-DICHLOROETHANE-D4	%REC/SURR	106	76-114	
TOLUENE-D8	%REC/SURR	101	81-117	
ANALYST	INITIALS	LL		

Comments:

AnalyticalTechnologies,Inc.

"FINAL REPORT FORMAT - SINGLE"

Accession: 510229
Client: ANALYTICAL TECHNOLOGIES, INC.
Project Number: 510334
Project Name: PSN
Project Location: PERSON STATION
Test: TO14
Analysis Method: TO 14 / SIM / Compendium of Methods, EPA-600/4-87-006, June 1988.
Extraction Method: N/A
Matrix: AIR
QC Level: I

Lab Id: 002
Client Sample Id: 510334-02

Sample Date/Time: 11-OCT-95 0842
Received Date: 12-OCT-95

Batch: MAB160
Blank: A
Dry Weight %: N/A

Extraction Date: N/A
Analysis Date: 25-OCT-95

Parameter:	Units:	Results:	Rpt Lmts:	Q:
ALPHA-CHLOROTOLUENE	MG/M3	ND	1.4	
BENZENE	MG/M3	ND	1.4	
BROMOMETHANE	MG/M3	ND	1.4	
CARBON TETRACHLORIDE	MG/M3	ND	1.4	
CHLOROBENZENE	MG/M3	ND	1.4	
CHLOROETHANE	MG/M3	ND	1.4	
CHLOROFORM	MG/M3	ND	1.4	
CHLOROMETHANE	MG/M3	ND	1.4	
CIS 1,2 DICHLOROETHYLENE	MG/M3	ND	1.4	
DICHLORODIFLUOROMETHANE	MG/M3	ND	1.4	
1,1-DICHLOROETHANE	MG/M3	ND	1.4	
1,2-DICHLOROETHANE	MG/M3	ND	1.4	
1,2-DICHLOROPROPANE	MG/M3	ND	1.4	
CIS-1,3-DICHLOROPROPENE	MG/M3	ND	1.4	
TRANS-1,3-DICHLOROPROPENE	MG/M3	ND	1.4	
DICHLOROTETRAFLUOROETHANE	MG/M3	ND	1.4	
ETHYL BENZENE	MG/M3	ND	1.4	
HEXACHLOROBUTADIENE	MG/M3	ND	1.4	
M-DICHLOROBENZENE	MG/M3	ND	1.4	
M,P-XYLENE	MG/M3	ND	1.4	
METHYLENE CHLORIDE	MG/M3	ND	3.3	
O-DICHLOROBENZENE	MG/M3	ND	1.4	
O-XYLENE	MG/M3	ND	1.4	
P-DICHLOROBENZENE	MG/M3	ND	1.4	
STYRENE	MG/M3	ND	1.4	
1,1,2,2-TETRACHLOROETHANE	MG/M3	ND	1.4	
TETRACHLOROETHYLENE	MG/M3	ND	1.4	
TOLUENE	MG/M3	ND	1.4	
1,1,2-TRICHLOROETHANE	MG/M3	ND	1.4	
TRICHLOROETHYLENE	MG/M3	ND	1.4	
TRICHLOROFLUOROMETHANE	MG/M3	ND	1.4	
VINYL CHLORIDE	MG/M3	ND	1.4	
1,2-DIBROMOETHANE (EDB)	MG/M3	ND	1.4	
1,2,4 TRICHLOROBENZENE	MG/M3	ND	1.4	
1,2,4-TRIMETHYLBENZENE	MG/M3	ND	1.4	
1,3,5-TRIMETHYLBENZENE	MG/M3	ND	1.4	
1,1-DICHLOROETHENE	MG/M3	ND	1.4	
1,1,1-TRICHLOROETHANE	MG/M3	ND	1.4	

AnalyticalTechnologies,Inc.

"FINAL REPORT FORMAT - SINGLE"

Accession: 510229
Client: ANALYTICAL TECHNOLOGIES, INC.
Project Number: 510334
Project Name: PSN
Project Location: PERSON STATION
Test: TO14
Analysis Method: TO 14 / SIM / Compendium of Methods, EPA-600/4-87-006, June 1988.
Extraction Method: N/A
Matrix: AIR
QC Level: I

Lab Id: 002
Client Sample Id: 510334-02
Sample Date/Time: 11-OCT-95 0842
Received Date: 12-OCT-95

Parameter:	Units:	Results:	Rpt Lmts:	Q:
TRICHLOROTRIFLUOROETHANE	MG/M3	ND	1.4	
4-ETHYLTOLUENE	MG/M3	ND	1.4	
BROMOFLUOROBENZENE	%REC/SURR	103	86-115	
1,2-DICHLOROETHANE-D4	%REC/SURR	104	76-114	
TOLUENE-D8	%REC/SURR	101	81-117	
ANALYST	INITIALS	LL		

Comments:

AnalyticalTechnologies,Inc.

"Method Report Summary"

Accession Number: 510229
Client: ANALYTICAL TECHNOLOGIES, INC.
Project Number: 510334
Project Name: PSN
Project Location: PERSON STATION
Test: TO14

Client Sample Id:	Parameter:	Unit:	Result:
510334-01	TETRACHLOROETHYLENE	MG/M3	20
	1,1-DICHLOROETHENE	MG/M3	10
	1,1,1-TRICHLOROETHANE	MG/M3	4.7

AnalyticalTechnologies,Inc.

"QC Report"

Title: Bag/Can Blank
Batch: MAB160
Analysis Method: TO 14 / SIM / Compendium of Methods, EPA-600/4-87-006, June 1988.
Extraction Method: N/A

Blank Id: A Date Analyzed: 25-OCT-95 Date Extracted: N/A

Parameters:	Units:	Results:	Reporting Limits:
ALPHA-CHLOROTOLUENE	MG/M3	ND	0.03
ACROLEIN	MG/M3	ND	1.0
ACETONE	MG/M3	ND	0.1
ACRYLONITRILE	MG/M3	ND	1.0
BENZENE	MG/M3	ND	0.03
BROMOMETHANE	MG/M3	ND	0.03
BROMOFORM	MG/M3	ND	0.03
2-BUTANONE	MG/M3	ND	0.10
BROMODICHLOROMETHANE	MG/M3	ND	0.03
CARBON TETRACHLORIDE	MG/M3	ND	0.03
CARBON DISULFIDE	MG/M3	ND	0.03
CHLOROBENZENE	MG/M3	ND	0.03
CHLOROETHANE	MG/M3	ND	0.03
CHLOROFORM	MG/M3	ND	0.03
CHLOROMETHANE	MG/M3	ND	0.03
CIS 1,2 DICHLOROETHYLENE	MG/M3	ND	0.03
TRANS 1,2 DICHLOROETHYLENE	MG/M3	ND	0.03
DICHLORODIFLUOROMETHANE	MG/M3	ND	0.03
DIBROMOCHLOROMETHANE	MG/M3	ND	0.03
1,1-DICHLOROETHANE	MG/M3	ND	0.03
1,2-DICHLOROETHANE	MG/M3	ND	0.03
1,2-DICHLOROPROPANE	MG/M3	ND	0.03
CIS-1,3-DICHLOROPROPENE	MG/M3	ND	0.03
TRANS-1,3-DICHLOROPROPENE	MG/M3	ND	0.03
DICHLOROTETRAFLUOROETHANE	MG/M3	ND	0.03
1,4-DICHLORO-2-BUTENE	MG/M3	ND	0.03
ETHYL BENZENE	MG/M3	ND	0.03
HEXACHLOROBUTADIENE	MG/M3	ND	0.03
2-HEXANONE	MG/M3	ND	0.10
M-DICHLOROBENZENE	MG/M3	ND	0.03
M,P-XYLENE	MG/M3	ND	0.03
METHYLENE CHLORIDE	MG/M3	ND	0.07
4-METHYL-2-PENTANONE	MG/M3	ND	0.10
O-DICHLOROBENZENE	MG/M3	ND	0.03
O-XYLENE	MG/M3	ND	0.03
P-DICHLOROBENZENE	MG/M3	ND	0.03
STYRENE	MG/M3	ND	0.03
1,1,2,2-TETRACHLOROETHANE	MG/M3	ND	0.03
TETRACHLOROETHYLENE	MG/M3	ND	0.03
TOLUENE	MG/M3	ND	0.03
1,1,2-TRICHLOROETHANE	MG/M3	ND	0.03
TRICHLOROETHYLENE	MG/M3	ND	0.03
TRICHLOROFLUOROMETHANE	MG/M3	ND	0.03
VINYL CHLORIDE	MG/M3	ND	0.03
VINYL ACETATE	MG/M3	ND	0.03
1,2-DIBROMOETHANE (EDB)	MG/M3	ND	0.03

AnalyticalTechnologies,Inc.

"QC Report"

Title: Bag/Can Blank
Batch: MAB160
Analysis Method: TO 14 / SIM / Compendium of Methods, EPA-600/4-87-006, June 1988.
Extraction Method: N/A

Parameters:	Units:	Results:	Reporting Limits:
1,2,4 TRICHLOROBENZENE	MG/M3	ND	0.03
1,2,4-TRIMETHYLBENZENE	MG/M3	ND	0.03
1,3,5-TRIMETHYLBENZENE	MG/M3	ND	0.03
1,1-DICHLOROETHENE	MG/M3	ND	0.03
1,1,1-TRICHLOROETHANE	MG/M3	ND	0.03
TRICHLOROTRIFLUOROETHANE	MG/M3	ND	0.03
4-ETHYLTOLUENE	MG/M3	ND	0.03
BROMOFLUOROBENZENE	%REC/SURR	104	86-115
1,2-DICHLOROETHANE-D4	%REC/SURR	112	76-114
TOLUENE-D8	%REC/SURR	99	81-117
ANALYST	INITIALS	LL	

Comments:

AnalyticalTechnologies,Inc.

"QC Report"

Title: Bag/Can Reagent
Batch: MAB160
Analysis Method: TO 14 / SIM / Compendium of Methods, EPA-600/4-87-006, June 1988.
Extraction Method: N/A

RS Date Analyzed: 25-Oct-95
RSD Date Analyzed: 25-Oct-95

RS Date Extracted: N/A
RSD Date Extracted: N/A

Parameters:	Spike Added	Sample Conc	RS Conc	RS %Rec	RSD Conc	RSD %Rec	RPD	RPD Lmts	Rec Lmts
1,1-DICHLOROETHENE	2.0	<0.03	2.1	105	1.8	90	15	20	73-123
TRICHLOROETHENE	2.0	<0.03	2.0	100	1.9	95	5	20	82-118
BENZENE	2.0	<0.03	2.0	100	1.9	95	5	20	90-123
TOLUENE	2.0	<0.03	1.8	90	1.7	85	6	20	83-124
CHLOROBENZENE	2.0	<0.03	2.0	100	1.9	95	5	20	88-126
Surrogates:									
1,2-DICHLOROETHANE-D4				98		96			76-114
TOLUENE-D8				101		104			81-117
BROMOFLUOROBENZENE				97		102			86-115

Comments:
DUE TO THE NATURE OF THE SAMPLE MATRIX, MATRIX SPIKE/MATRIX SPIKE DUPLICATE CANNOT BE ANALYZED.

Notes:
N/S = NOT SUBMITTED N/A = NOT APPLICABLE D = DILUTED OUT
MG/M3 = PARTS PER BILLION. < = LESS THAN REPORTING LIMIT.
* = VALUES OUTSIDE OF QUALITY CONTROL LIMITS.
SOURCES FOR CONTROL LIMITS ARE INTERNAL LABORATORY QUALITY ASSURANCE PROGRAM AND REFERENCED METHOD.

AnalyticalTechnologies,Inc.

Common notation for Organic reporting

N/S = NOT SUBMITTED
N/A = NOT APPLICABLE
D = DILUTED OUT
UG/L = PARTS PER BILLION.
UG/KG = PARTS PER BILLION.
MG/KG = PARTS PER MILLION.
MG/L = PARTS PER MILLION.
MG/M3 = MILLIGRAMS PER CUBIC METER.
NG = NANOGRAMS.
UG = MICROGRAMS.
PPBV = PARTS PER BILLION/VOLUME.
< = LESS THAN DETECTION LIMIT.
* = VALUES OUTSIDE OF QUALITY CONTROL LIMITS
J = THE REPORTED VALUE IS EITHER LESS THAN THE REPORTING LIMIT BUT GREATER THAN ZERO, OR QUANTITATED AS A TIC; THEREFORE, IT IS ESTIMATED.
JJ = REPORTED VALUE IS ESTIMATED DUE TO MATRIX INTERFERENCE.
ND = NOT DETECTED ABOVE REPORT LIMIT.
RPT LIMIT = REPORTING LIMITS BASED ON METHOD DETECTION LIMIT STUDIES.
RPD = RELATIVE PERCENT DIFFERENCE (OR DEVIATION)

SOURCES FOR CONTROL LIMITS ARE INTERNAL LABORATORY QUALITY ASSURANCE PROGRAM AND REFERENCED METHOD.

ORGANIC SOILS ARE REPORTED ON A DRY WEIGHT BASIS.

DUE TO THE NATURE OF THE SAMPLE MATRIX, MATRIX SPIKE/MATRIX SPIKE DUPLICATE ANALYSIS CANNOT BE PERFORMED FOR AIR ANALYSIS.

LP = LEVERNE PETERSON	RW = RITA WINGO
DWB = DAVID BOWERS	LD = LARRY DILMORE
DB = DENNIS BESON	DC = DAVID CELESTIAL
LL = LANCE LARSON	RB = RAFAEL BARRAZA
JA = JENNIFER ALEXANDER	PL = PAUL LESCHENSKY

AnalyticalTechnologies,Inc.
11 East Olive Road • Pensacola, Florida 32514 • (904) 474-1001

CHAIN OF CUSTODY

PART 1 - Bottle Shipment Information ATI ACCESSION #: 510334

CLIENT: ATI Albuquerque | CLIENT PROJECT NUMBER:

QUANTITY OF SAMPLE CONTAINERS SHIPPED	PRESERVATIVE							PLASTIC CONTAINERS							GLASS CONTAINERS									NOTES
	H_2SO_4	HNO3	HCL	Zn Acetate	$Na_2S_2O_3$	Unpreserved	NaOH	8 oz.	16 oz.	32 oz.	½ gallon	1 gallon	Whirl-pak	100-ML Cup	120 ml (A)	1 liter (A)	1 liter (C)	40 ml Vial	4 oz. wm	8 oz. wm	16 oz. wm	32 oz. wm	D.I. Trip Blank	
2						6				6	Summas													

Relinquished By:	Time	Date	Received By:	Time	Date
[signature]	1725	10/9/95	Andrew Lacker	1030	10/10

PART 2 - Sample/Project Information

SAMPLE MATRIX CODES

DW DRINKING WATER, WW WASTEWATER, GW GROUNDWATER, AI AIR, SO SOIL, OI OIL, SW SURFACE WATER, SL SLUDGE, ST STORMWATER

SAMPLE I.D.	SAMPLE DATE	SAMPLE TIME	MATRIX			TO-14											TOTAL # OF BOTTLES
Vapor Extractor Influent	10-11-95	0840				X											1
Vapor Extractor Effluent	10-11-95	0842				X											1

Total Number of Bottles/Containers:

Relinquished By	Date	Time	Received By	Date	Time
Andrew Lacker	10/10	1030	Chuck Ant	10-11-95	0911
Chuck Ant	10/11	1137	Dan Johnson	10-11-95	11:36

Client			Purchase Order Number
Address			Project Number
City	State	Zip	Project Name Person Station
Phone Number ( )	Fax Number ( )		Project Location
Project Manager			Sampled By

TURNAROUND TIMES	check below	SPECIAL INSTRUCTIONS
Standard - 14-21 days		
RUSH (must be approved in advance)		
<- 48 hours - 2x standard price		
3-7 days - 1.5x standard price		
TCLP - 1 week rush 1.5x standard price		
QC Level none I II III IV (circle one)		Copies of report needed _____

AnalyticalTechnologies, Inc. Albuquerque, NM

Chain of Custody

510229

DATE 10/11 PAGE ___ OF ___

NETWORK PROJECT MANAGER: ~~LETITIA KRAKOWSKI~~ Kim McNeill

COMPANY: Analytical Technologies, Inc.

ADDRESS: 2709-D Pan American Freeway, NE
Albuquerque, NM 87107

CLIENT PROJECT MANAGER: Kim McNeill

ANALYSIS REQUEST

SAMPLE ID	DATE	TIME	MATRIX	LAB ID	TOX	TOC	ORGANIC LEAD	SULFIDE	SURFACTANTS (MBAS)		632/632 MOD	619/619 MOD	610/8310	TO-14	8240 (TCLP 1311) ZHE		Diesel/Gasoline/BTXE/MTBE/ (MOD 8015/8020)	Volatile Organics GC/MS (624/8240)		NACE	ASBESTOS		BOD	TOTAL COLIFORM	FECAL COLIFORM		GROSS ALPHA/BETA	RADIUM 226/228		AIR - O2, CO2, METHANE	AIR/Diesel/Gasoline/BTXE/ (MOD 8015/8020)	NUMBER OF CONTAINERS
510334-01	10/11	0840	AIR											X																			
-02	10/11	0842	AIR											X																			

PROJECT INFORMATION	
PROJECT NUMBER:	510334
PROJECT NAME:	Person Station
QC LEVEL:	STD. IV
QC REQUIRED:	MS MSD BLANK
TAT:	STANDARD RUSH!

SAMPLE RECEIPT	
TOTAL NUMBER OF CONTAINERS	2
CHAIN OF CUSTODY SEALS	Y
INTACT?	X
RECEIVED GOOD COND./COLD	Y
LAB NUMBER	

SAMPLES SENT TO:	
SAN DIEGO	
FT. COLLINS	
RENTON	
PENSACOLA	X
PORTLAND	
PHOENIX	
FIBERQUANT	

RELINQUISHED BY: 1.
Signature: Andrew Parker Time: 1700
Printed Name: Andrew Parker Date 1/00
Analytical Technologies, Inc. Albuquerque

RELINQUISHED BY: 2.
Signature: Time:
Printed Name: Date
Company:

RECEIVED BY: (LAB) 1.
Signature: Time:
Printed Name: Date:
Company:

RECEIVED BY: (LAB) 2.
Signature: Olga Rios Time: 0748
Printed Name: Diane Rios Date: 10-12-9
Company: ATI-Pano

DUE DATE: ~~10/23~~ AP 10/30
RUSH SURCHARGE: Ø
CLIENT DISCOUNT: Quote %
Iwo #km991.

~~DO NOT ROUTE TO PHOENIX~~

AnalyticalTechnologies,Inc.

2709-D Pan American Freeway, NE Albuquerque, NM 87107
Phone (505) 344-3777 FAX (505) 344-4413

ATI I.D. **511304**

November 20, 1995

Public Service Company of NM
Alvarado Square ER-16
Albuquerque, NM 87158

Project Name/Number: PERSON STATION

Attention: Steve Anderson

On **11/02/95**, Analytical Technologies, Inc., (ADHS License No. AZ0015), received a request to analyze **air** sample(s). The sample(s) were analyzed with EPA methodology or equivalent methods. The results of these analyses and the quality control data, which follow each set of analyses, are enclosed.

All analyses were performed by Analytical Technologies, Inc., 11 East Olive Road, Pensacola, FL.

If you have any questions or comments, please do not hesitate to contact us at (505) 344-3777.

Kimberly D. McNeill
Project Manager

H. Mitchell Rubenstein, Ph.D.
Laboratory Manager

MR:jt

Enclosure

Analytical Technologies, Inc.

CLIENT : PUBLIC SERVICE CO OF NM
PROJECT # : (NONE)
PROJECT NAME : PERSON STATION

DATE RECEIVED : 11/02/95
REPORT DATE : 11/20/95

ATI ID: 511304

	ATI PENSACOLA ID #	CLIENT DESCRIPTION	MATRIX	DATE COLLECTED
01	511304-01	VAPOR EXTRACTOR INFLUENT	AIR	11/02/95

---TOTALS---

MATRIX	#SAMPLES
AIR	1

ATI STANDARD DISPOSAL PRACTICE

The samples from this project will be disposed of in thirty (30) days from the date of this report. If an extended storage period is required, please contact our sample control department before the scheduled disposal date.

Analytical Technologies, Inc.

"FINAL REPORT FORMAT - SINGLE"

Accession: 511128
Client: ANALYTICAL TECHNOLOGIES, INC.
Project Number: 511304
Project Name: PERSON STATION
Project Location: PSN
Test: TO14
Analysis Method: TO 14 / SIM / Compendium of Methods, EPA-600/4-87-006, June 1988.
Extraction Method: N/A
Matrix: AIR
QC Level: I

Lab Id: 001
Client Sample Id: 511304-01
Sample Date/Time: 02-NOV-95 1056
Received Date: 03-NOV-95

Batch: MAB166
Blank: A
Dry Weight %: N/A
Extraction Date: N/A
Analysis Date: 13-NOV-95

Parameter:	Units:	Results:	Rpt Lmts:	Q:
ALPHA-CHLOROTOLUENE	MG/M3	ND	0.69	
BENZENE	MG/M3	ND	0.69	
BROMOMETHANE	MG/M3	ND	0.69	
CARBON TETRACHLORIDE	MG/M3	ND	0.69	
CHLOROBENZENE	MG/M3	ND	0.69	
CHLOROETHANE	MG/M3	ND	0.69	
CHLOROFORM	MG/M3	ND	0.69	
CHLOROMETHANE	MG/M3	ND	0.69	
CIS 1,2 DICHLOROETHYLENE	MG/M3	ND	0.69	
DICHLORODIFLUOROMETHANE	MG/M3	ND	0.69	
1,1-DICHLOROETHANE	MG/M3	ND	0.69	
1,2-DICHLOROETHANE	MG/M3	ND	0.69	
1,2-DICHLOROPROPANE	MG/M3	ND	0.69	
CIS-1,3-DICHLOROPROPENE	MG/M3	ND	0.69	
TRANS-1,3-DICHLOROPROPENE	MG/M3	ND	0.69	
DICHLOROTETRAFLUOROETHANE	MG/M3	ND	0.69	
ETHYL BENZENE	MG/M3	ND	0.69	
HEXACHLOROBUTADIENE	MG/M3	ND	0.69	
M-DICHLOROBENZENE	MG/M3	ND	0.69	
M,P-XYLENE	MG/M3	ND	0.69	
METHYLENE CHLORIDE	MG/M3	ND	1.6	
O-DICHLOROBENZENE	MG/M3	ND	0.69	
O-XYLENE	MG/M3	ND	0.69	
P-DICHLOROBENZENE	MG/M3	ND	0.69	
STYRENE	MG/M3	ND	0.69	
1,1,2,2-TETRACHLOROETHANE	MG/M3	ND	0.69	
TETRACHLOROETHYLENE	MG/M3	17	0.69	
TOLUENE	MG/M3	ND	0.69	
1,1,2-TRICHLOROETHANE	MG/M3	ND	0.69	
TRICHLOROETHYLENE	MG/M3	ND	0.69	
TRICHLOROFLUOROMETHANE	MG/M3	ND	0.69	
VINYL CHLORIDE	MG/M3	ND	0.69	
1,2-DIBROMOETHANE (EDB)	MG/M3	ND	0.69	
1,2,4 TRICHLOROBENZENE	MG/M3	ND	0.69	
1,2,4-TRIMETHYLBENZENE	MG/M3	ND	0.69	
1,3,5-TRIMETHYLBENZENE	MG/M3	ND	0.69	
1,1-DICHLOROETHENE	MG/M3	8.4	0.69	
1,1,1-TRICHLOROETHANE	MG/M3	3.9	0.69	

Analytical Technologies, Inc.

"FINAL REPORT FORMAT - SINGLE"

Accession:	511128
Client:	ANALYTICAL TECHNOLOGIES, INC.
Project Number:	511304
Project Name:	PERSON STATION
Project Location:	PSN
Test:	TO14
Analysis Method:	TO 14 / SIM / Compendium of Methods, EPA-600/4-87-006, June 1988.
Extraction Method:	N/A
Matrix:	AIR
QC Level:	I

Lab Id: 001 — Sample Date/Time: 02-NOV-95 1056

Client Sample Id: 511304-01 — Received Date: 03-NOV-95

Parameter:	Units:	Results:	Rpt Lmts:	Q:
TRICHLOROTRIFLUOROETHANE	MG/M3	ND	0.69	
4-ETHYLTOLUENE	MG/M3	ND	0.69	
BROMOFLUOROBENZENE	%REC/SURR	100	86-115	
1,2-DICHLOROETHANE-D4	%REC/SURR	101	76-114	
TOLUENE-D8	%REC/SURR	101	81-117	
ANALYST	INITIALS	LL		

Comments:

Analytical Technologies, Inc.

"Method Report Summary"

Accession Number: 511128
Client: ANALYTICAL TECHNOLOGIES, INC.
Project Number: 511304
Project Name: PERSON STATION
Project Location: PSN
Test: TO14

Client Sample Id:	Parameter:	Unit:	Result:
511304-01	TETRACHLOROETHYLENE	MG/M3	17
	1,1-DICHLOROETHENE	MG/M3	8.4
	1,1,1-TRICHLOROETHANE	MG/M3	3.9

Analytical Technologies, Inc.

"QC Report"

Title: Bag/Can Blank
Batch: MAB166
Analysis Method: TO 14 / SIM / Compendium of Methods, EPA-600/4-87-006, June 1988.
Extraction Method: N/A

Blank Id: A Date Analyzed: 13-NOV-95 Date Extracted: N/A

Parameters:	Units:	Results:	Reporting Limits:
ALPHA-CHLOROTOLUENE	MG/M3	ND	0.03
ACROLEIN	MG/M3	ND	1.0
ACETONE	MG/M3	ND	0.1
ACRYLONITRILE	MG/M3	ND	1.0
BENZENE	MG/M3	ND	0.03
BROMOMETHANE	MG/M3	ND	0.03
BROMOFORM	MG/M3	ND	0.03
2-BUTANONE	MG/M3	ND	0.10
BROMODICHLOROMETHANE	MG/M3	ND	0.03
CARBON TETRACHLORIDE	MG/M3	ND	0.03
CARBON DISULFIDE	MG/M3	ND	0.03
CHLOROBENZENE	MG/M3	ND	0.03
CHLOROETHANE	MG/M3	ND	0.03
CHLOROFORM	MG/M3	ND	0.03
CHLOROMETHANE	MG/M3	ND	0.03
CIS 1,2 DICHLOROETHYLENE	MG/M3	ND	0.03
TRANS 1,2 DICHLOROETHYLENE	MG/M3	ND	0.03
DICHLORODIFLUOROMETHANE	MG/M3	ND	0.03
DIBROMOCHLOROMETHANE	MG/M3	ND	0.03
1,1-DICHLOROETHANE	MG/M3	ND	0.03
1,2-DICHLOROETHANE	MG/M3	ND	0.03
1,2-DICHLOROPROPANE	MG/M3	ND	0.03
CIS-1,3-DICHLOROPROPENE	MG/M3	ND	0.03
TRANS-1,3-DICHLOROPROPENE	MG/M3	ND	0.03
DICHLOROTETRAFLUOROETHANE	MG/M3	ND	0.03
1,4-DICHLORO-2-BUTENE	MG/M3	ND	0.03
ETHYL BENZENE	MG/M3	ND	0.03
HEXACHLOROBUTADIENE	MG/M3	ND	0.03
2-HEXANONE	MG/M3	ND	0.10
M-DICHLOROBENZENE	MG/M3	ND	0.03
M,P-XYLENE	MG/M3	ND	0.03
METHYLENE CHLORIDE	MG/M3	ND	0.07
4-METHYL-2-PENTANONE	MG/M3	ND	0.10
O-DICHLOROBENZENE	MG/M3	ND	0.03
O-XYLENE	MG/M3	ND	0.03
P-DICHLOROBENZENE	MG/M3	ND	0.03
STYRENE	MG/M3	ND	0.03
1,1,2,2-TETRACHLOROETHANE	MG/M3	ND	0.03
TETRACHLOROETHYLENE	MG/M3	ND	0.03
TOLUENE	MG/M3	ND	0.03
1,1,2-TRICHLOROETHANE	MG/M3	ND	0.03
TRICHLOROETHYLENE	MG/M3	ND	0.03
TRICHLOROFLUOROMETHANE	MG/M3	ND	0.03
VINYL CHLORIDE	MG/M3	ND	0.03
VINYL ACETATE	MG/M3	ND	0.03
1,2-DIBROMOETHANE (EDB)	MG/M3	ND	0.03

Analytical Technologies, Inc.

"QC Report"

Title: Bag/Can Blank
Batch: MAB166
Analysis Method: TO 14 / SIM / Compendium of Methods, EPA-600/4-87-006, June 1988.
Extraction Method: N/A

Parameters:	Units:	Results:	Reporting Limits:
1,2,4 TRICHLOROBENZENE	MG/M3	ND	0.03
1,2,4-TRIMETHYLBENZENE	MG/M3	ND	0.03
1,3,5-TRIMETHYLBENZENE	MG/M3	ND	0.03
1,1-DICHLOROETHENE	MG/M3	ND	0.03
1,1,1-TRICHLOROETHANE	MG/M3	ND	0.03
TRICHLOROTRIFLUOROETHANE	MG/M3	ND	0.03
4-ETHYLTOLUENE	MG/M3	ND	0.03
BROMOFLUOROBENZENE	%REC/SURR	99	86-115
1,2-DICHLOROETHANE-D4	%REC/SURR	104	76-114
TOLUENE-D8	%REC/SURR	98	81-117
ANALYST	INITIALS	LL	

Comments:

Analytical Technologies, Inc.

"QC Report"

Title: Bag/Can Reagent
Batch: MAB166
Analysis Method: TO 14 / SIM / Compendium of Methods, EPA-600/4-87-006, June 1988.
Extraction Method: N/A

RS Date Analyzed: 13-NOV-95
RSD Date Analyzed: 13-NOV-95

RS Date Extracted: N/A
RSD Date Extracted: N/A

Parameters:	Spike Added	Sample Conc	RS Conc	RS %Rec	RSD Conc	RSD %Rec	RPD	RPD Lmts	Rec Lmts
1,1-DICHLOROETHENE	2.0	<0.03	2.1	105	2.0	100	5	20	73-123
TRICHLOROETHENE	2.0	<0.03	1.9	95	1.9	95	0	20	82-118
BENZENE	2.0	<0.03	2.1	105	2.1	105	0	20	90-123
TOLUENE	2.0	<0.03	1.9	95	1.9	95	0	20	83-124
CHLOROBENZENE	2.0	<0.03	2.1	105	2.0	100	5	20	88-126
Surrogates:									
1,2-DICHLOROETHANE-D4				105		102			76-114
TOLUENE-D8				101		100			81-117
BROMOFLUOROBENZENE				99		98			86-115

Comments:
DUE TO THE NATURE OF THE SAMPLE MATRIX, MATRIX SPIKE/MATRIX SPIKE DUPLICATE CANNOT BE ANALYZED.

Notes:
N/S = NOT SUBMITTED N/A = NOT APPLICABLE D = DILUTED OUT
MG/M3 = PARTS PER BILLION. < = LESS THAN REPORTING LIMIT.
* = VALUES OUTSIDE OF QUALITY CONTROL LIMITS.
SOURCES FOR CONTROL LIMITS ARE INTERNAL LABORATORY QUALITY ASSURANCE PROGRAM AND REFERENCED METHOD.

Analytical Technologies, Inc.

Common notation for Organic reporting

N/S = NOT SUBMITTED
N/A = NOT APPLICABLE
D = DILUTED OUT
UG/L = PARTS PER BILLION.
UG/KG = PARTS PER BILLION.
MG/KG = PARTS PER MILLION.
MG/L = PARTS PER MILLION.
MG/M3 = MILLIGRAMS PER CUBIC METER.
NG = NANOGRAMS.
UG = MICROGRAMS.
PPBV = PARTS PER BILLION/VOLUME.
< = LESS THAN DETECTION LIMIT.
* = VALUES OUTSIDE OF QUALITY CONTROL LIMITS
J = THE REPORTED VALUE IS EITHER LESS THAN THE REPORTING LIMIT BUT GREATER THAN ZERO, OR QUANTITATED AS A TIC; THEREFORE, IT IS ESTIMATED.
JJ = REPORTED VALUE IS ESTIMATED DUE TO MATRIX INTERFERENCE.
ND = NOT DETECTED ABOVE REPORT LIMIT.
RPT LIMIT = REPORTING LIMITS BASED ON METHOD DETECTION LIMIT STUDIES.
RPD = RELATIVE PERCENT DIFFERENCE (OR DEVIATION)

SOURCES FOR CONTROL LIMITS ARE INTERNAL LABORATORY QUALITY ASSURANCE PROGRAM AND REFERENCED METHOD.

ORGANIC SOILS ARE REPORTED ON A DRY WEIGHT BASIS.

DUE TO THE NATURE OF THE SAMPLE MATRIX, MATRIX SPIKE/MATRIX SPIKE DUPLICATE ANALYSIS CANNOT BE PERFORMED FOR AIR ANALYSIS.

LP = LEVERNE PETERSON	RW = RITA WINGO
DWB = DAVID BOWERS	LD = LARRY DILMORE
DB = DENNIS BESON	DC = DAVID CELESTIAL
LL = LANCE LARSON	RB = RAFAEL BARRAZA
JA = JENNIFER ALEXANDER	PL = PAUL LESCHENSKY

AnalyticalTechnologies, Inc.
11 East Olive Road • Pensacola, Florida 32514 • (904) 474-1001

CHAIN OF CUSTODY

PART 1 - Bottle Shipment Information

ATI ACCESSION #: 511304

CLIENT: ATI Albuquerque

CLIENT PROJECT NUMBER:

QUANTITY OF SAMPLE CONTAINERS SHIPPED	PRESERVATIVE							PLASTIC CONTAINERS							GLASS CONTAINERS								D.I. Trip Blank	NOTES
	H_2SO_4	HNO3	HCL	Zn Acetate	$Na_2S_2O_3$	Unpreserved	NaOH	8 oz.	16 oz.	32 oz.	½ gallon	1 gallon	Whirl-pak	100-ML Cup	120 ml (A)	1 liter (A)	1 liter (C)	40 ml Vial	4 oz. wm	8 oz. wm	16 oz. wm	32 oz. wm		
1										6				5	4									AT041

Relinquished By	Time	Date	Received By	Time	Date
[signature]	1515	11 OCT 95	Andrew Parker	1140	10/26

PART 2 - Sample/Project Information

SAMPLE MATRIX CODES

DW DRINKING WATER, WW WASTEWATER, GW GROUNDWATER, AI AIR, SO SOIL, OI OIL, SW SURFACE WATER, SL SLUDGE, ST STORMWATER

PARAMETERS AND PRESERVATIVES REQUESTED

SAMPLE I.D.	SAMPLE DATE	SAMPLE TIME	MATRIX	TO-14	TOTAL # OF BOTTLES
VAPOR Extraction Influent	11-2-95	1056		X	1

Total Number of Bottles/Containers:

Relinquished By	Date	Time	Received By	Date	Time
Andrew Parker	10/26	1140	[signature]	10-26	1140
[signature]	11-2-95	1110	Andrew Parker	11/02/95	1110

Client			Purchase Order Number
Address			Project Number
City	State	Zip	Project Name
Phone Number ( )	Fax Number ( )		Project Location
Project Manager			Sampled By

TURNAROUND TIMES	check below	SPECIAL INSTRUCTIONS
Standard - 14-21 days		
RUSH (must be approved in advance)		
<- 48 hours - 2x standard price		
3-7 days - 1.5x standard price		
TCLP - 1 week rush 1.5x standard price		
QC Level none I II III IV (circle one)		Copies of report needed _____

Analytical Technologies, Inc., Albuquerque, NM
San Diego • Phoenix • Seattle • Pensacola • Ft. Collins • Portland • Albuquerque

CHAIN OF CUSTODY

DATE: 11/3/2 PAGE 1 OF 1

ATI LAB I.D. 511128

PLEASE FILL THIS FORM IN COMPLETELY. SHADED AREAS ARE FOR LAB USE ONLY.

PROJECT MANAGER: Kim McNeill

COMPANY: AIT-ALB
ADDRESS:
PHONE:
FAX:

BILL TO:
COMPANY:
ADDRESS:

ANALYSIS REQUEST

SAMPLE ID	DATE	TIME	MATRIX	LAB ID	Petroleum Hydrocarbons (418.1)	(MOD 8015) Gas/Diesel	Diesel/Gasoline/BTXE/MTBE (MOD 8015/8020)	BTXE/MTBE (8020)		TO-14	Chlorinated Hydrocarbons (601/8010)	Aromatic Hydrocarbons (602/8020)	SDWA Volatiles (502.1/503.1), 502.2 Reg. & Unreg.			Pesticides/PCB (608/8080)	Herbicides (615/8150)	Base/Neutral/Acid Compounds GC/MS (625/8270)	Volatile Organics GC/MS (624/8240)	Polynuclear Aromatics (610/8310)			SDWA Primary Standards - Arizona	SDWA Secondary Standards - Arizona	SDWA Primary Standards - Federal	SDWA Secondary Standards - Federal			The 13 Priority Pollutant Metals	RCRA Metals by Total Digestion	RCRA Metals by TCLP (1311)		NUMBER OF CONTAINERS
511304-01	11/2	1056	AIR	1						X																							

PROJECT INFORMATION

PROJ. NO.: 511304
PROJ. NAME: Person Station
P.O. NO.:
SHIPPED VIA:

SAMPLE RECEIPT

NO. CONTAINERS	1
CUSTODY SEALS	Y / N / NA
RECEIVED INTACT	Y
RECEIVED COLD	N/A

PRIOR AUTHORIZATION IS REQUIRED FOR RUSH PROJECTS

(RUSH) ☐ 24hr ☐ 48hr ☐ 72hr ☐ 1 WEEK (NORMAL) ☒ 2 WEEK

Due: 11/14 Discount: Quote IWO#: KM1066

Route only to (circle one):

Portland Renton San Diego Pensacola Ft. Collins

LAB USE ONLY

SAMPLED & RELINQUISHED BY: 1.	RELINQUISHED BY: 2.	RELINQUISHED BY: 3.
Signature: Andrew Parker Time: 1700	Signature: Time:	Signature: Time:
Printed Name: Andrew Parker Date: 11/2	Printed Name: Date:	Printed Name: Date:
Company: Phone:	Company:	Company:

RECEIVED BY: 1.	RECEIVED BY: 2.	RECEIVED BY:(LAB) 3.
Signature: Time:	Signature: Time:	Signature: Time: 0941
Printed Name: Date:	Printed Name: Date:	Printed Name: R.E. LSPERMAN Date: 11/3/95
Company:	Company:	Analytical Technologies, Inc.

AnalyticalTechnologies,Inc.

2709-D Pan American Freeway, NE Albuquerque, NM 87107
Phone (505) 344-3777 FAX (505) 344-4413

ATI I.D. **511321**

November 28, 1995

Public Service Co of NM
Alvarado Square ER16
Albuquerque, NM 87158

Project Name/Number: PERSON STATION-REMEDIATION

Attention: Steve Anderson

On **11/09/95**, Analytical Technologies, Inc., (ADHS License No. AZ0015), received a request to analyze **air** samples. The samples were analyzed with EPA methodology or equivalent methods. The results of these analyses and the quality control data, which follow each set of analyses, are enclosed.

All analyses were performed by Analytical Technologies, Inc., 11 East Olive Road, Pensacola, FL.

If you have any questions or comments, please do not hesitate to contact us at (505) 344-3777.

Kimberly D. McNeill
Project Manager

H. Mitchell Rubenstein, Ph.D.
Laboratory Manager

MR:jt

Enclosure

Analytical Technologies, Inc.

CLIENT : PUBLIC SERVICE CO OF NM
PROJECT # : (NONE)
PROJECT NAME : PERSON STATION-REMEDIATION

DATE RECEIVED : 11/09/95
REPORT DATE : 11/28/95

ATI ID: 511321

	ATI ID #	CLIENT DESCRIPTION	MATRIX	DATE COLLECTED
01	511321-01	VAPOR EXTRACTOR INLET	AIR	11/09/95
02	511321-02	VAPOR EXTRACTOR OUTLET	AIR	11/09/95

---TOTALS---

MATRIX	#SAMPLES
AIR	2

ATI STANDARD DISPOSAL PRACTICE

The samples from this project will be disposed of in thirty (30) days from the date of this report. If an extended storage period is required, please contact our sample control department before the scheduled disposal date.

Analytical Technologies, Inc.

"FINAL REPORT FORMAT - SINGLE"

Accession: 511273
Client: ANALYTICAL TECHNOLOGIES, INC.
Project Number: 511321
Project Name: PERSON STATION
Project Location: PSN
Test: TO14
Analysis Method: TO 14 / SIM / Compendium of Methods, EPA-600/4-87-006, June 1988.
Extraction Method: N/A
Matrix: AIR
QC Level: I

Lab Id: 001
Client Sample Id: 511321-01
Sample Date/Time: 09-NOV-95 0915
Received Date: 10-NOV-95

Batch: MAB171
Blank: B
Dry Weight %: N/A
Extraction Date: N/A
Analysis Date: 21-NOV-95

Parameter:	Units:	Results:	Rpt Lmts:	Q:
ALPHA-CHLOROTOLUENE	MG/M3	ND	1.7	
BENZENE	MG/M3	ND	1.7	
BROMOMETHANE	MG/M3	ND	1.7	
CARBON TETRACHLORIDE	MG/M3	ND	1.7	
CHLOROBENZENE	MG/M3	ND	1.7	
CHLOROETHANE	MG/M3	ND	1.7	
CHLOROFORM	MG/M3	ND	1.7	
CHLOROMETHANE	MG/M3	ND	1.7	
CIS 1,2 DICHLOROETHYLENE	MG/M3	ND	1.7	
DICHLORODIFLUOROMETHANE	MG/M3	ND	1.7	
1,1-DICHLOROETHANE	MG/M3	ND	1.7	
1,2-DICHLOROETHANE	MG/M3	ND	1.7	
1,2-DICHLOROPROPANE	MG/M3	ND	1.7	
CIS-1,3-DICHLOROPROPENE	MG/M3	ND	1.7	
TRANS-1,3-DICHLOROPROPENE	MG/M3	ND	1.7	
DICHLOROTETRAFLUOROETHANE	MG/M3	ND	1.7	
ETHYL BENZENE	MG/M3	ND	1.7	
HEXACHLOROBUTADIENE	MG/M3	ND	1.7	
M-DICHLOROBENZENE	MG/M3	ND	1.7	
M,P-XYLENE	MG/M3	ND	1.7	
METHYLENE CHLORIDE	MG/M3	ND	4.0	
O-DICHLOROBENZENE	MG/M3	ND	1.7	
O-XYLENE	MG/M3	ND	1.7	
P-DICHLOROBENZENE	MG/M3	ND	1.7	
STYRENE	MG/M3	ND	1.7	
1,1,2,2-TETRACHLOROETHANE	MG/M3	ND	1.7	
TETRACHLOROETHYLENE	MG/M3	17	1.7	
TOLUENE	MG/M3	ND	1.7	
1,1,2-TRICHLOROETHANE	MG/M3	ND	1.7	
TRICHLOROETHYLENE	MG/M3	ND	1.7	
TRICHLOROFLUOROMETHANE	MG/M3	ND	1.7	
VINYL CHLORIDE	MG/M3	ND	1.7	
1,2-DIBROMOETHANE (EDB)	MG/M3	ND	1.7	
1,2,4 TRICHLOROBENZENE	MG/M3	ND	1.7	
1,2,4-TRIMETHYLBENZENE	MG/M3	ND	1.7	
1,3,5-TRIMETHYLBENZENE	MG/M3	ND	1.7	
1,1-DICHLOROETHENE	MG/M3	8.7	1.7	
1,1,1-TRICHLOROETHANE	MG/M3	3.8	1.7	

Analytical Technologies, Inc.

"FINAL REPORT FORMAT - SINGLE"

Accession:	511273
Client:	ANALYTICAL TECHNOLOGIES, INC.
Project Number:	511321
Project Name:	PERSON STATION
Project Location:	PSN
Test:	TO14
Analysis Method:	TO 14 / SIM / Compendium of Methods, EPA-600/4-87-006, June 1988.
Extraction Method:	N/A
Matrix:	AIR
QC Level:	I

Lab Id:	001	Sample Date/Time:	09-NOV-95 0915
Client Sample Id:	511321-01	Received Date:	10-NOV-95

Parameter:	Units:	Results:	Rpt Lmts:	Q:
TRICHLOROTRIFLUOROETHANE	MG/M3	ND	1.7	
4-ETHYLTOLUENE	MG/M3	ND	1.7	
BROMOFLUOROBENZENE	%REC/SURR	105	86-115	
1,2-DICHLOROETHANE-D4	%REC/SURR	109	76-114	
TOLUENE-D8	%REC/SURR	104	81-117	
ANALYST	INITIALS	LL		

Comments:

Analytical Technologies, Inc.

"FINAL REPORT FORMAT - SINGLE"

Accession: 511273
Client: ANALYTICAL TECHNOLOGIES, INC.
Project Number: 511321
Project Name: PERSON STATION
Project Location: PSN
Test: TO14
Analysis Method: TO 14 / SIM / Compendium of Methods, EPA-600/4-87-006, June 1988.
Extraction Method: N/A
Matrix: AIR
QC Level: I

Lab Id: 002 Sample Date/Time: 09-NOV-95 0917
Client Sample Id: 511321-02 Received Date: 10-NOV-95

Batch: MAB171 Extraction Date: N/A
Blank: B Dry Weight %: N/A Analysis Date: 21-NOV-95

Parameter:	Units:	Results:	Rpt Lmts:	Q:
ALPHA-CHLOROTOLUENE	MG/M3	ND	1.7	
BENZENE	MG/M3	ND	1.7	
BROMOMETHANE	MG/M3	ND	1.7	
CARBON TETRACHLORIDE	MG/M3	ND	1.7	
CHLOROBENZENE	MG/M3	ND	1.7	
CHLOROETHANE	MG/M3	ND	1.7	
CHLOROFORM	MG/M3	ND	1.7	
CHLOROMETHANE	MG/M3	ND	1.7	
CIS 1,2 DICHLOROETHYLENE	MG/M3	ND	1.7	
DICHLORODIFLUOROMETHANE	MG/M3	ND	1.7	
1,1-DICHLOROETHANE	MG/M3	ND	1.7	
1,2-DICHLOROETHANE	MG/M3	ND	1.7	
1,2-DICHLOROPROPANE	MG/M3	ND	1.7	
CIS-1,3-DICHLOROPROPENE	MG/M3	ND	1.7	
TRANS-1,3-DICHLOROPROPENE	MG/M3	ND	1.7	
DICHLOROTETRAFLUOROETHANE	MG/M3	ND	1.7	
ETHYL BENZENE	MG/M3	ND	1.7	
HEXACHLOROBUTADIENE	MG/M3	ND	1.7	
M-DICHLOROBENZENE	MG/M3	ND	1.7	
M,P-XYLENE	MG/M3	ND	1.7	
METHYLENE CHLORIDE	MG/M3	ND	4.1	
O-DICHLOROBENZENE	MG/M3	ND	1.7	
O-XYLENE	MG/M3	ND	1.7	
P-DICHLOROBENZENE	MG/M3	ND	1.7	
STYRENE	MG/M3	ND	1.7	
1,1,2,2-TETRACHLOROETHANE	MG/M3	ND	1.7	
TETRACHLOROETHYLENE	MG/M3	ND	1.7	
TOLUENE	MG/M3	ND	1.7	
1,1,2-TRICHLOROETHANE	MG/M3	ND	1.7	
TRICHLOROETHYLENE	MG/M3	ND	1.7	
TRICHLOROFLUOROMETHANE	MG/M3	ND	1.7	
VINYL CHLORIDE	MG/M3	ND	1.7	
1,2-DIBROMOETHANE (EDB)	MG/M3	ND	1.7	
1,2,4 TRICHLOROBENZENE	MG/M3	ND	1.7	
1,2,4-TRIMETHYLBENZENE	MG/M3	ND	1.7	
1,3,5-TRIMETHYLBENZENE	MG/M3	ND	1.7	
1,1-DICHLOROETHENE	MG/M3	10	1.7	
1,1,1-TRICHLOROETHANE	MG/M3	ND	1.7	

Analytical Technologies, Inc.

"FINAL REPORT FORMAT - SINGLE"

Accession: 511273
Client: ANALYTICAL TECHNOLOGIES, INC.
Project Number: 511321
Project Name: PERSON STATION
Project Location: PSN
Test: TO14
Analysis Method: TO 14 / SIM / Compendium of Methods, EPA-600/4-87-006, June 1988.
Extraction Method: N/A
Matrix: AIR
QC Level: I

Lab Id: 002
Client Sample Id: 511321-02
Sample Date/Time: 09-NOV-95 0917
Received Date: 10-NOV-95

Parameter:	Units:	Results:	Rpt Lmts:	Q:
TRICHLOROTRIFLUOROETHANE	MG/M3	ND	1.7	
4-ETHYLTOLUENE	MG/M3	ND	1.7	
BROMOFLUOROBENZENE	%REC/SURR	105	86-115	
1,2-DICHLOROETHANE-D4	%REC/SURR	109	76-114	
TOLUENE-D8	%REC/SURR	104	81-117	
ANALYST	INITIALS	LL		

Comments:

Analytical Technologies, Inc.

"Method Report Summary"

Accession Number: 511273
Client: ANALYTICAL TECHNOLOGIES, INC.
Project Number: 511321
Project Name: PERSON STATION
Project Location: PSN
Test: TO14

Client Sample Id:	Parameter:	Unit:	Result:
511321-01	TETRACHLOROETHYLENE	MG/M3	17
	1,1-DICHLOROETHENE	MG/M3	8.7
	1,1,1-TRICHLOROETHANE	MG/M3	3.8
511321-02	1,1-DICHLOROETHENE	MG/M3	10

Analytical Technologies, Inc.

"QC Report"

Title: Bag/Can Blank
Batch: MAB171
Analysis Method: TO 14 / SIM / Compendium of Methods, EPA-600/4-87-006, June 1988.
Extraction Method: N/A

Blank Id: B Date Analyzed: 21-NOV-95 Date Extracted: N/A

Parameters:	Units:	Results:	Reporting Limits:
ALPHA-CHLOROTOLUENE	MG/M3	ND	0.03
ACROLEIN	MG/M3	ND	1.0
ACETONE	MG/M3	ND	0.1
ACRYLONITRILE	MG/M3	ND	1.0
BENZENE	MG/M3	ND	0.03
BROMOMETHANE	MG/M3	ND	0.03
BROMOFORM	MG/M3	ND	0.03
2-BUTANONE	MG/M3	ND	0.10
BROMODICHLOROMETHANE	MG/M3	ND	0.03
CARBON TETRACHLORIDE	MG/M3	ND	0.03
CARBON DISULFIDE	MG/M3	ND	0.03
CHLOROBENZENE	MG/M3	ND	0.03
CHLOROETHANE	MG/M3	ND	0.03
CHLOROFORM	MG/M3	ND	0.03
CHLOROMETHANE	MG/M3	ND	0.03
CIS 1,2 DICHLOROETHYLENE	MG/M3	ND	0.03
TRANS 1,2 DICHLOROETHYLENE	MG/M3	ND	0.03
DICHLORODIFLUOROMETHANE	MG/M3	ND	0.03
DIBROMOCHLOROMETHANE	MG/M3	ND	0.03
1,1-DICHLOROETHANE	MG/M3	ND	0.03
1,2-DICHLOROETHANE	MG/M3	ND	0.03
1,2-DICHLOROPROPANE	MG/M3	ND	0.03
CIS-1,3-DICHLOROPROPENE	MG/M3	ND	0.03
TRANS-1,3-DICHLOROPROPENE	MG/M3	ND	0.03
DICHLOROTETRAFLUOROETHANE	MG/M3	ND	0.03
1,4-DICHLORO-2-BUTENE	MG/M3	ND	0.03
ETHYL BENZENE	MG/M3	ND	0.03
HEXACHLOROBUTADIENE	MG/M3	ND	0.03
2-HEXANONE	MG/M3	ND	0.10
M-DICHLOROBENZENE	MG/M3	ND	0.03
M,P-XYLENE	MG/M3	ND	0.03
METHYLENE CHLORIDE	MG/M3	ND	0.07
4-METHYL-2-PENTANONE	MG/M3	ND	0.10
O-DICHLOROBENZENE	MG/M3	ND	0.03
O-XYLENE	MG/M3	ND	0.03
P-DICHLOROBENZENE	MG/M3	ND	0.03
STYRENE	MG/M3	ND	0.03
1,1,2,2-TETRACHLOROETHANE	MG/M3	ND	0.03
TETRACHLOROETHYLENE	MG/M3	ND	0.03
TOLUENE	MG/M3	ND	0.03
1,1,2-TRICHLOROETHANE	MG/M3	ND	0.03
TRICHLOROETHYLENE	MG/M3	ND	0.03
TRICHLOROFLUOROMETHANE	MG/M3	ND	0.03
VINYL CHLORIDE	MG/M3	ND	0.03
VINYL ACETATE	MG/M3	ND	0.03
1,2-DIBROMOETHANE (EDB)	MG/M3	ND	0.03

Analytical Technologies, Inc.

"QC Report"

Title: Bag/Can Blank
Batch: MAB171
Analysis Method: TO 14 / SIM / Compendium of Methods, EPA-600/4-87-006, June 1988.
Extraction Method: N/A

Parameters:	Units:	Results:	Reporting Limits:
1,2,4 TRICHLOROBENZENE	MG/M3	ND	0.03
1,2,4-TRIMETHYLBENZENE	MG/M3	ND	0.03
1,3,5-TRIMETHYLBENZENE	MG/M3	ND	0.03
1,1-DICHLOROETHENE	MG/M3	ND	0.03
1,1,1-TRICHLOROETHANE	MG/M3	ND	0.03
TRICHLOROTRIFLUOROETHANE	MG/M3	ND	0.03
4-ETHYLTOLUENE	MG/M3	ND	0.03
BROMOFLUOROBENZENE	%REC/SURR	104	86-115
1,2-DICHLOROETHANE-D4	%REC/SURR	105	76-114
TOLUENE-D8	%REC/SURR	104	81-117
ANALYST	INITIALS	LL	

Comments:

Analytical Technologies, Inc.

"QC Report"

Title: Bag/Can Reagent
Batch: MAB171
Analysis Method: TO 14 / SIM / Compendium of Methods, EPA-600/4-87-006, June 1988.
Extraction Method: N/A

RS Date Analyzed: 20-Nov-95
RSD Date Analyzed: 20-Nov-95

RS Date Extracted: N/A
RSD Date Extracted: N/A

Parameters:	Spike Added	Sample Conc	RS Conc	RS %Rec	RSD Conc	RSD %Rec	RPD	RPD Lmts	Rec Lmts
1,1-DICHLOROETHENE	2.0	<0.03	1.9	95	1.9	95	0	20	73-123
TRICHLOROETHENE	2.0	<0.03	1.9	95	1.9	95	0	20	82-118
BENZENE	2.0	<0.03	2.0	100	2.0	100	0	20	90-123
TOLUENE	2.0	<0.03	1.9	95	1.8	90	5	20	83-124
CHLOROBENZENE	2.0	<0.03	1.9	95	1.9	95	0	20	88-126
Surrogates:									
1,2-DICHLOROETHANE-D4				106		107			76-114
TOLUENE-D8				104		101			81-117
BROMOFLUOROBENZENE				100		101			86-115

Comments:
DUE TO THE NATURE OF THE SAMPLE MATRIX, MATRIX SPIKE/MATRIX SPIKE DUPLICATE CANNOT BE ANALYZED.

Notes:
N/S = NOT SUBMITTED N/A = NOT APPLICABLE D = DILUTED OUT
MG/M3 = PARTS PER BILLION. < = LESS THAN REPORTING LIMIT.
* = VALUES OUTSIDE OF QUALITY CONTROL LIMITS.
SOURCES FOR CONTROL LIMITS ARE INTERNAL LABORATORY QUALITY ASSURANCE PROGRAM AND REFERENCED METHOD.

Analytical Technologies, Inc.

Common notation for Organic reporting

N/S = NOT SUBMITTED
N/A = NOT APPLICABLE
D = DILUTED OUT
UG/L = PARTS PER BILLION.
UG/KG = PARTS PER BILLION.
MG/KG = PARTS PER MILLION.
MG/L = PARTS PER MILLION.
MG/M3 = MILLIGRAMS PER CUBIC METER.
NG = NANOGRAMS.
UG = MICROGRAMS.
PPBV = PARTS PER BILLION/VOLUME.
< = LESS THAN DETECTION LIMIT.
* = VALUES OUTSIDE OF QUALITY CONTROL LIMITS
J = THE REPORTED VALUE IS EITHER LESS THAN THE REPORTING LIMIT BUT GREATER THAN ZERO, OR QUANTITATED AS A TIC; THEREFORE, IT IS ESTIMATED.
JJ = REPORTED VALUE IS ESTIMATED DUE TO MATRIX INTERFERENCE.
ND = NOT DETECTED ABOVE REPORT LIMIT.
RPT LIMIT = REPORTING LIMITS BASED ON METHOD DETECTION LIMIT STUDIES.
RPD = RELATIVE PERCENT DIFFERENCE (OR DEVIATION)

SOURCES FOR CONTROL LIMITS ARE INTERNAL LABORATORY QUALITY ASSURANCE PROGRAM AND REFERENCED METHOD.

ORGANIC SOILS ARE REPORTED ON A DRY WEIGHT BASIS.

DUE TO THE NATURE OF THE SAMPLE MATRIX, MATRIX SPIKE/MATRIX SPIKE DUPLICATE ANALYSIS CANNOT BE PERFORMED FOR AIR ANALYSIS.

LP = LEVERNE PETERSON	RW = RITA WINGO
DWB = DAVID BOWERS	LD = LARRY DILMORE
DB = DENNIS BESON	DC = DAVID CELESTIAL
LL = LANCE LARSON	RB = RAFAEL BARRAZA
JA = JENNIFER ALEXANDER	PL = PAUL LESCHENSKY

AnalyticalTechnologies, Inc.
11 East Olive Road • Pensacola, Florida 32514 • (904) 474-1001

CHAIN OF CUSTODY

PART 1 - Bottle Shipment Information

ATI ACCESSION #: 51132

CLIENT: ATI

CLIENT PROJECT NUMBER:

QUANTITY OF SAMPLE CONTAINERS SHIPPED	PRESERVATIVE							PLASTIC CONTAINERS							GLASS CONTAINERS									NOTES
	H_2SO_4	HNO3	HCL	Zn Acetate	$Na_2S_2O_3$	Unpreserved	NaOH	8 oz.	16 oz.	32 oz.	½ gallon	1 gallon	Whirl-pak	100-ML Cup	120 ml (A)	1 liter (A)	1 liter (C)	40 ml Vial	4 oz. wm	8 oz. wm	16 oz. wm	32 oz. wm	D.I. Trip Blank	
3					Solumns																			

Relinquished By:	Time	Date	Received By:	Time	Date
[signature]	1700	10/31/95	Andrew Parker	1000	11/1

PART 2 - Sample Information

SAMPLE MATRIX CODES

DW DRINKING WATER
WW WASTEWATER
GW GROUNDWATER
AI AIR
SO SOIL
OI OIL
SW SURFACE WATER
SL SLUDGE
ST STORMWATER

PARAMETERS AND PRESERVATIVES REQUESTED

SAMPLE I.D.	SAMPLE DATE	SAMPLE TIME	MATRIX	TO-14	TOTAL # OF BOTTLES
VAPOR EXTRACTION Inlet	11-9-95	0915	AIR	X	1
VAPOR EXTRACTION OUTLET	11-9-95	0917	AIR	X	1

Total Number of Bottles/Containers:

Relinquished By	Date	Time	Received By	Date	Time
Andrew Parker	11/1	1000	[signature]	11-2-95	1115
[signature]	11-9-95	1010	Andrew Parker	11/9	1045

Client PSN			Purchase Order Number
Address			Project Number
City	State	Zip	Project Name Person Station - Remediation
Phone Number ( )	Fax Number ( )		Project Location
Project Manager Steve Anderson			Sampled By

TURNAROUND TIMES	check below	SPECIAL INSTRUCTIONS
Standard - 14-21 days		
RUSH (must be approved in advance)		
<- 48 hours - 2x standard price		
3-7 days - 1.5x standard price		
TCLP - 1 week rush 1.5x standard price		
QC Level none I II III IV (circle one)		Copies of report needed _____

Analytical Technologies of New Mexico, Inc.
Albuquerque, New Mexico

Interlab Chain of Custody

DATE: 11 PAGE: 1 OF 1

NETWORK PROJECT MANAGER: KIMBERLY D. McNEILL

COMPANY: **Analytical Technologies of New Mexico, Inc.**
ADDRESS: 2709-D Pan American Freeway, NE
Albuquerque, NM 87107

CLIENT PROJECT MANAGER: Kim McNeill

ANALYSIS REQUEST

SAMPLE ID	DATE	TIME	MATRIX	LAB ID	Metals - TAL	Metals - PP List	Metals - RCRA	RCRA Metals by TCLP (1311)			TOX	TOC	Gen Chemistry			Oil and Grease	BOD	COD	Pesticides/PCB (608/8080)	Herbicides (615/8150)	Base/Neutral Acid Compounds GC/MS (625/8270)	Volatile Organics GC/MS (624/8240)	Polynuclear Aromatics (610/8310)	8240 (TCLP 1311) ZHE	8270 (TCLP 1311)			TO-14	Gross Alpha/Beta				NUMBER OF CONTAINERS
511321-01	11/9	0915	AIR	1																								X					
-02	↓	0917	↓	2																								X					

PROJECT INFORMATION	
PROJECT NUMBER:	511321
PROJECT NAME:	Person Station - PSN
QC LEVEL:	(STD) IV
QC REQUIRED:	MS MSD BLANK
TAT:	(STANDARD) RUSH!
DUE DATE:	11/21
RUSH SURCHARGE:	NO
CLIENT DISCOUNT:	Quote
SPECIAL CERTIFICATION REQUIRED:	☐ YES ☐ NO

SAMPLE RECEIPT	
TOTAL NUMBER OF CONTAINERS	2
CHAIN OF CUSTODY SEALS	
INTACT?	
RECEIVED GOOD COND./COLD	
LAB NUMBER	511223

IWO # KM1078

SAMPLES SENT TO:	
SAN DIEGO	
FT. COLLINS	
RENTON	
PENSACOLA	X
PORTLAND	
PHOENIX	

RELINQUISHED BY: 1.
Signature: Andrew Parker Time: 1700
Printed Name: Andrew Parker Date: 11/9
Analytical Technologies of New Mexico, Inc. Albuquerque

RECEIVED BY: 1.
Signature: Time:
Printed Name: Date:
Company:

RELINQUISHED BY: 2.
Signature: Time:
Printed Name: Date:
Company:

RECEIVED BY: (LAB) 2.
Signature: Rob Elspeman Time: 1006
Printed Name: R. ELSPEMAN Date: 11/10/95
Company: ATI-FL

AnalyticalTechnologies,Inc.

CLIENT : PUBLIC SERVICE CO OF NM
PROJECT # : (NONE)
PROJECT NAME : PERSON STATION REMED. PROJ.

DATE RECEIVED : 11/29/95
REPORT DATE : 12/15/95

ATI ID: 511379

	ATI ID #	CLIENT DESCRIPTION	MATRIX	DATE COLLECTED
01	511379-01	VAPOR EXTRACTOR INLET	AIR	11/29/95

---TOTALS---

MATRIX	#SAMPLES
AIR	1

ATI STANDARD DISPOSAL PRACTICE

The samples from this project will be disposed of in thirty (30) days from the date of this report. If an extended storage period is required, please contact our sample control department before the scheduled disposal date.

AnalyticalTechnologies,Inc.

"FINAL REPORT FORMAT - SINGLE"

Accession: 512081
Client: ANALYTICAL TECHNOLOGIES, INC.
Project Number: 511379
Project Name: PERSON STATION REMEDIATION
Project Location: PNM
Test: TO14
Analysis Method: TO 14 / SIM / Compendium of Methods, EPA-600/4-87-006, June 1988.
Extraction Method: N/A
Matrix: AIR
QC Level: I

Lab Id: 001
Client Sample Id: 511379-01
Sample Date/Time: 29-NOV-95 0927
Received Date: 30-NOV-95

Batch: MAB176
Blank: B
Dry Weight %: N/A
Extraction Date: N/A
Analysis Date: 06-DEC-95

Parameter:	Units:	Results:	Rpt Lmts:	Q:
ALPHA-CHLOROTOLUENE	MG/M3	ND	0.69	
BENZENE	MG/M3	ND	0.69	
BROMOMETHANE	MG/M3	ND	0.69	
CARBON TETRACHLORIDE	MG/M3	ND	0.69	
CHLOROBENZENE	MG/M3	ND	0.69	
CHLOROETHANE	MG/M3	ND	0.69	
CHLOROFORM	MG/M3	ND	0.69	
CHLOROMETHANE	MG/M3	ND	0.69	
CIS 1,2 DICHLOROETHYLENE	MG/M3	ND	0.69	
DICHLORODIFLUOROMETHANE	MG/M3	ND	0.69	
1,1-DICHLOROETHANE	MG/M3	ND	0.69	
1,2-DICHLOROETHANE	MG/M3	ND	0.69	
1,2-DICHLOROPROPANE	MG/M3	ND	0.69	
CIS-1,3-DICHLOROPROPENE	MG/M3	ND	0.69	
TRANS-1,3-DICHLOROPROPENE	MG/M3	ND	0.69	
DICHLOROTETRAFLUOROETHANE	MG/M3	ND	0.69	
ETHYL BENZENE	MG/M3	ND	0.69	
HEXACHLOROBUTADIENE	MG/M3	ND	0.69	
M-DICHLOROBENZENE	MG/M3	ND	0.69	
M,P-XYLENE	MG/M3	ND	0.69	
METHYLENE CHLORIDE	MG/M3	ND	1.6	
O-DICHLOROBENZENE	MG/M3	ND	0.69	
O-XYLENE	MG/M3	ND	0.69	
P-DICHLOROBENZENE	MG/M3	ND	0.69	
STYRENE	MG/M3	ND	0.69	
1,1,2,2-TETRACHLOROETHANE	MG/M3	ND	0.69	
TETRACHLOROETHYLENE	MG/M3	14	0.69	
TOLUENE	MG/M3	ND	0.69	
1,1,2-TRICHLOROETHANE	MG/M3	ND	0.69	
TRICHLOROETHYLENE	MG/M3	ND	0.69	
TRICHLOROFLUOROMETHANE	MG/M3	ND	0.69	
VINYL CHLORIDE	MG/M3	ND	0.69	
1,2-DIBROMOETHANE (EDB)	MG/M3	ND	0.69	
1,2,4 TRICHLOROBENZENE	MG/M3	ND	0.69	
1,2,4-TRIMETHYLBENZENE	MG/M3	ND	0.69	
1,3,5-TRIMETHYLBENZENE	MG/M3	ND	0.69	
1,1-DICHLOROETHENE	MG/M3	7.0	0.69	
1,1,1-TRICHLOROETHANE	MG/M3	3.1	0.69	

AnalyticalTechnologies,Inc.

"FINAL REPORT FORMAT - SINGLE"

Accession: 512081
Client: ANALYTICAL TECHNOLOGIES, INC.
Project Number: 511379
Project Name: PERSON STATION REMEDIATION
Project Location: PNM
Test: TO14
Analysis Method: TO 14 / SIM / Compendium of Methods, EPA-600/4-87-006, June 1988.
Extraction Method: N/A
Matrix: AIR
QC Level: I

Lab Id: 001
Client Sample Id: 511379-01

Sample Date/Time: 29-NOV-95 0927
Received Date: 30-NOV-95

Parameter:	Units:	Results:	Rpt Lmts:	Q:
TRICHLOROTRIFLUOROETHANE	MG/M3	ND	0.69	
4-ETHYLTOLUENE	MG/M3	ND	0.69	
BROMOFLUOROBENZENE	%REC/SURR	105	86-115	
1,2-DICHLOROETHANE-D4	%REC/SURR	105	76-114	
TOLUENE-D8	%REC/SURR	102	81-117	
ANALYST	INITIALS	LL		

Comments:

AnalyticalTechnologies,Inc.

"Method Report Summary"

Accession Number: 512081
Client: ANALYTICAL TECHNOLOGIES, INC.
Project Number: 511379
Project Name: PERSON STATION REMEDIATION
Project Location: PNM
Test: TO14

Client Sample Id:	Parameter:	Unit:	Result:
511379-01	TETRACHLOROETHYLENE	MG/M3	14
	1,1-DICHLOROETHENE	MG/M3	7.0
	1,1,1-TRICHLOROETHANE	MG/M3	3.1

AnalyticalTechnologies,Inc.

"QC Report"

Title: Bag/Can Blank
Batch: MAB176
Analysis Method: TO 14 / SIM / Compendium of Methods, EPA-600/4-87-006, June 1988.
Extraction Method: N/A

Blank Id: B Date Analyzed: 06-DEC-95 Date Extracted: N/A

Parameters:	Units:	Results:	Reporting Limits:
ALPHA-CHLOROTOLUENE	MG/M3	ND	0.03
ACROLEIN	MG/M3	ND	1.0
ACETONE	MG/M3	ND	0.1
ACRYLONITRILE	MG/M3	ND	1.0
BENZENE	MG/M3	ND	0.03
BROMOMETHANE	MG/M3	ND	0.03
BROMOFORM	MG/M3	ND	0.03
2-BUTANONE	MG/M3	ND	0.10
BROMODICHLOROMETHANE	MG/M3	ND	0.03
CARBON TETRACHLORIDE	MG/M3	ND	0.03
CARBON DISULFIDE	MG/M3	ND	0.03
CHLOROBENZENE	MG/M3	ND	0.03
CHLOROETHANE	MG/M3	ND	0.03
CHLOROFORM	MG/M3	ND	0.03
CHLOROMETHANE	MG/M3	ND	0.03
CIS 1,2 DICHLOROETHYLENE	MG/M3	ND	0.03
TRANS 1,2 DICHLOROETHYLENE	MG/M3	ND	0.03
DICHLORODIFLUOROMETHANE	MG/M3	ND	0.03
DIBROMOCHLOROMETHANE	MG/M3	ND	0.03
1,1-DICHLOROETHANE	MG/M3	ND	0.03
1-DICHLOROETHANE	MG/M3	ND	0.03
,2-DICHLOROPROPANE	MG/M3	ND	0.03
CIS-1,3-DICHLOROPROPENE	MG/M3	ND	0.03
TRANS-1,3-DICHLOROPROPENE	MG/M3	ND	0.03
DICHLOROTETRAFLUOROETHANE	MG/M3	ND	0.03
1,4-DICHLORO-2-BUTENE	MG/M3	ND	0.03
ETHYL BENZENE	MG/M3	ND	0.03
HEXACHLOROBUTADIENE	MG/M3	ND	0.03
2-HEXANONE	MG/M3	ND	0.10
M-DICHLOROBENZENE	MG/M3	ND	0.03
M,P-XYLENE	MG/M3	ND	0.03
METHYLENE CHLORIDE	MG/M3	ND	0.07
4-METHYL-2-PENTANONE	MG/M3	ND	0.10
O-DICHLOROBENZENE	MG/M3	ND	0.03
O-XYLENE	MG/M3	ND	0.03
P-DICHLOROBENZENE	MG/M3	ND	0.03
STYRENE	MG/M3	ND	0.03
1,1,2,2-TETRACHLOROETHANE	MG/M3	ND	0.03
TETRACHLOROETHYLENE	MG/M3	ND	0.03
TOLUENE	MG/M3	ND	0.03
1,1,2-TRICHLOROETHANE	MG/M3	ND	0.03
TRICHLOROETHYLENE	MG/M3	ND	0.03
TRICHLOROFLUOROMETHANE	MG/M3	ND	0.03
VINYL CHLORIDE	MG/M3	ND	0.03
VINYL ACETATE	MG/M3	ND	0.03
1,2-DIBROMOETHANE (EDB)	MG/M3	ND	0.03

AnalyticalTechnologies,Inc.

"QC Report"

Title: Bag/Can Blank
Batch: MAB176
Analysis Method: TO 14 / SIM / Compendium of Methods, EPA-600/4-87-006, June 1988.
Extraction Method: N/A

Parameters:	Units:	Results:	Reporting Limits:
1,2,4 TRICHLOROBENZENE	MG/M3	ND	0.03
1,2,4-TRIMETHYLBENZENE	MG/M3	ND	0.03
1,3,5-TRIMETHYLBENZENE	MG/M3	ND	0.03
1,1-DICHLOROETHENE	MG/M3	ND	0.03
1,1,1-TRICHLOROETHANE	MG/M3	ND	0.03
TRICHLOROTRIFLUOROETHANE	MG/M3	ND	0.03
4-ETHYLTOLUENE	MG/M3	ND	0.03
BROMOFLUOROBENZENE	%REC/SURR	102	86-115
1,2-DICHLOROETHANE-D4	%REC/SURR	106	76-114
TOLUENE-D8	%REC/SURR	99	81-117
ANALYST	INITIALS	LL	

Comments:

AnalyticalTechnologies,Inc.

"QC Report"

Title: Bag/Can Reagent
Batch: MAB176
Analysis Method: TO 14 / SIM / Compendium of Methods, EPA-600/4-87-006, June 1988.
Extraction Method: N/A

RS Date Analyzed: 04-DEC-95
RSD Date Analyzed: 04-DEC-95

RS Date Extracted: N/A
RSD Date Extracted: N/A

Parameters:	Spike Added	Sample Conc	RS Conc	RS %Rec	RSD Conc	RSD %Rec	RPD	RPD Lmts	Rec Lmts
1,1-DICHLOROETHENE	2.0	<0.03	2.2	110	2.3	115	4	20	73-123
TRICHLOROETHENE	2.0	<0.03	2.0	100	2.1	105	5	20	82-118
BENZENE	2.0	<0.03	2.2	110	2.3	115	4	20	90-123
TOLUENE	2.0	<0.03	2.1	105	2.2	110	5	20	83-124
CHLOROBENZENE	2.0	<0.03	2.2	110	2.4	120	9	20	88-126
Surrogates:									
1,2-DICHLOROETHANE-D4				109		108			76-114
TOLUENE-D8				110		107			81-117
BROMOFLUOROBENZENE				100		101			86-115

Comments:

Notes:
N/A = NOT SUBMITTED N/A = NOT APPLICABLE D = DILUTED OUT
PPB = PARTS PER BILLION. < = LESS THAN REPORTING LIMIT.
* = VALUES OUTSIDE OF QUALITY CONTROL LIMITS.
SOURCES FOR CONTROL LIMITS ARE INTERNAL LABORATORY QUALITY ASSURANCE PROGRAM AND REFERENCED METHOD.

AnalyticalTechnologies,Inc.

Common notation for Organic reporting

N/S = NOT SUBMITTED
N/A = NOT APPLICABLE
D = DILUTED OUT
UG/L = PARTS PER BILLION.
UG/KG = PARTS PER BILLION.
MG/KG = PARTS PER MILLION.
MG/L = PARTS PER MILLION.
MG/M3 = MILLIGRAMS PER CUBIC METER.
NG = NANOGRAMS.
UG = MICROGRAMS.
PPBV = PARTS PER BILLION/VOLUME.
< = LESS THAN DETECTION LIMIT.
* = VALUES OUTSIDE OF QUALITY CONTROL LIMITS
J = THE REPORTED VALUE IS EITHER LESS THAN THE REPORTING LIMIT BUT GREATER THAN ZERO, OR QUANTITATED AS A TIC; THEREFORE, IT IS ESTIMATED.
JJ = REPORTED VALUE IS ESTIMATED DUE TO MATRIX INTERFERENCE.
ND = NOT DETECTED ABOVE REPORT LIMIT.
RPT LIMIT = REPORTING LIMITS BASED ON METHOD DETECTION LIMIT STUDIES.
RPD = RELATIVE PERCENT DIFFERENCE (OR DEVIATION)

SOURCES FOR CONTROL LIMITS ARE INTERNAL LABORATORY QUALITY ASSURANCE PROGRAM AND REFERENCED METHOD.

ORGANIC SOILS ARE REPORTED ON A DRY WEIGHT BASIS.

DUE TO THE NATURE OF THE SAMPLE MATRIX, MATRIX SPIKE/MATRIX SPIKE DUPLICATE ANALYSIS CANNOT BE PERFORMED FOR AIR ANALYSIS.

LP = LEVERNE PETERSON	RW = RITA WINGO
DB = DAVID BOWERS	LD = LARRY DILMORE
DB = DENNIS BESON	DC = DAVID CELESTIAL
LL = LANCE LARSON	RB = RAFAEL BARRAZA
JA = JENNIFER ALEXANDER	PL = PAUL LESCHENSKY

AnalyticalTechnologies, Inc.
11 East Olive Road • Pensacola, Florida 32514 • (904) 474-1001

CHAIN OF CUSTODY

PART 1 - Bottle Shipment Information ATI ACCESSION #: 511379

CLIENT: ATI Albuquerque | CLIENT PROJECT NUMBER:

QUANTITY OF SAMPLE CONTAINERS SHIPPED	PRESERVATIVE							PLASTIC CONTAINERS							GLASS CONTAINERS								NOTES
	H_2SO_4	HNO3	HCL	Zn Acetate	$Na_2S_2O_3$	Unpreserved	NaOH	8 oz.	16 oz.	32 oz.	½ gallon	1 gallon	Whirl-pak	100-ML Cup	120 ml (A)	1 liter (A)	1 liter (C)	40 ml Vial	4 oz. wm	8 oz. wm	16 oz. wm	32 oz. wm	D.I. Trip Blank	
3									6		2												

Relinquished By:	Time	Date	Received By:	Time	Date
[signature]	1645	27 Nov 95	Andrew Parker	0940	11/28

PART 2 - Sample/Project Information

SAMPLE MATRIX CODES

DW DRINKING WATER, WW WASTEWATER, GW GROUNDWATER, AI AIR, SO SOIL, OI OIL, SW SURFACE WATER, SL SLUDGE, ST STORMWATER

PARAMETERS AND PRESERVATIVES REQUESTED

SAMPLE I.D.	SAMPLE DATE	SAMPLE TIME	MATRIX	TO-14	Lab #	TOTAL # OF BOTTLES
Imp. Extractor ~~Tower~~ Inlet	11-29-95	0927	AI	X	-01	1

Total Number of Bottles/Containers:

Relinquished By	Date	Time	Received By	Date	Time
Andrew Parker	11/28	0940	Chuck [illegible]	11-29-95	1300
Chuck [illegible]	11-29	0950	Peggy Lynn	11-29-95	9:55AM

Client	PNM	Purchase Order Number	
Address	4400 Paseo Del Norte	Project Number	
City	Abq. NM	State NM	Zip 87117
Project Name	Person Station Remediation Project		
Phone Number	(505) 241-2576	Fax Number	(505) 241-2497
Project Location	Person Station		
Project Manager	Steve Anderson	Sampled By	Chuck Arater

TURNAROUND TIMES	check below	SPECIAL INSTRUCTIONS
Standard - 14-21 days	✓	
RUSH (must be approved in advance)		
<- 48 hours - 2x standard price		
3-7 days - 1.5x standard price		
TCLP - 1 week rush 1.5x standard price		
QC Level none I II III IV (circle one)		Copies of report needed _____

Analytical Technologies, Inc.

2709-D Pan American Freeway, NE Albuquerque, NM 87107
Phone (505) 344-3777 FAX (505) 344-4413

ATI I.D. **512316**

December 26, 1995

Public Service Co of NM
Alvarado Square ER16
Albuquerque, NM 87158

Project Name/Number: PERSON STATION REMEDIATION

Attention: Steve Anderson

On **12/06/95**, Analytical Technologies, Inc., (ADHS License No. AZ0015), received a request to analyze **air** samples. The samples were analyzed with EPA methodology or equivalent methods. The results of these analyses and the quality control data, which follow each set of analyses, are enclosed.

All analyses were performed by Analytical Technologies, Inc., 11 East Olive Road, Pensacola, FL.

If you have any questions or comments, please do not hesitate to contact us at (505) 344-3777.

Mary F. Cappelli for K.M.

Kimberly D. McNeill
Project Manager

H. Mitchell Rubenstein, Ph.D.
Laboratory Manager

MR:jt

Enclosure

AnalyticalTechnologies,Inc.

CLIENT : PUBLIC SERVICE CO OF NM
PROJECT # : (NONE)
PROJECT NAME : PERSON STATION REMEDIATION

DATE RECEIVED : 12/06/95
REPORT DATE : 12/26/95

ATI ID: 512316

	ATI ID #	CLIENT DESCRIPTION	MATRIX	DATE COLLECTED
01	512316-01	VAPOR EXTRACTOR INLET	AIR	12/06/95
02	512316-02	VAPOR EXTRACTOR OULET	AIR	12/06/95

---TOTALS---

MATRIX	#SAMPLES
AIR	2

ATI STANDARD DISPOSAL PRACTICE

The samples from this project will be disposed of in thirty (30) days from the date of this report. If an extended storage period is required, please contact our sample control department before the scheduled disposal date.

AnalyticalTechnologies,Inc.

"FINAL REPORT FORMAT - SINGLE"

Accession: 512212
Client: ANALYTICAL TECHNOLOGIES, INC.
Project Number: 512316
Project Name: PERSON STATION
Project Location: PSN
Test: TO14
Analysis Method: TO 14 / SIM / Compendium of Methods, EPA-600/4-87-006, June 1988.
Extraction Method: N/A
Matrix: AIR
QC Level: I

Lab Id: 001
Client Sample Id: 512316-01
Sample Date/Time: 06-DEC-95 1007
Received Date: 07-DEC-95

Batch: MAB180
Blank: A
Dry Weight %: N/A
Extraction Date: N/A
Analysis Date: 19-DEC-95

Parameter:	Units:	Results:	Rpt Lmts:	Q:
ALPHA-CHLOROTOLUENE	MG/M3	ND	0.69	
BENZENE	MG/M3	ND	0.69	
BROMOMETHANE	MG/M3	ND	0.69	
CARBON TETRACHLORIDE	MG/M3	ND	0.69	
CHLOROBENZENE	MG/M3	ND	0.69	
CHLOROETHANE	MG/M3	ND	0.69	
CHLOROFORM	MG/M3	ND	0.69	
CHLOROMETHANE	MG/M3	ND	0.69	
CIS 1,2 DICHLOROETHYLENE	MG/M3	ND	0.69	
DICHLORODIFLUOROMETHANE	MG/M3	ND	0.69	
1,1-DICHLOROETHANE	MG/M3	ND	0.69	
1,2-DICHLOROETHANE	MG/M3	ND	0.69	
1,2-DICHLOROPROPANE	MG/M3	ND	0.69	
CIS-1,3-DICHLOROPROPENE	MG/M3	ND	0.69	
TRANS-1,3-DICHLOROPROPENE	MG/M3	ND	0.69	
DICHLOROTETRAFLUOROETHANE	MG/M3	ND	0.69	
ETHYL BENZENE	MG/M3	ND	0.69	
HEXACHLOROBUTADIENE	MG/M3	ND	0.69	
M-DICHLOROBENZENE	MG/M3	ND	0.69	
M,P-XYLENE	MG/M3	ND	0.69	
METHYLENE CHLORIDE	MG/M3	ND	1.6	
O-DICHLOROBENZENE	MG/M3	ND	0.69	
O-XYLENE	MG/M3	ND	0.69	
P-DICHLOROBENZENE	MG/M3	ND	0.69	
STYRENE	MG/M3	ND	0.69	
1,1,2,2-TETRACHLOROETHANE	MG/M3	ND	0.69	
TETRACHLOROETHYLENE	MG/M3	14	0.69	
TOLUENE	MG/M3	ND	0.69	
1,1,2-TRICHLOROETHANE	MG/M3	ND	0.69	
TRICHLOROETHYLENE	MG/M3	ND	0.69	
TRICHLOROFLUOROMETHANE	MG/M3	ND	0.69	
VINYL CHLORIDE	MG/M3	ND	0.69	
1,2-DIBROMOETHANE (EDB)	MG/M3	ND	0.69	
1,2,4 TRICHLOROBENZENE	MG/M3	ND	0.69	
1,2,4-TRIMETHYLBENZENE	MG/M3	ND	0.69	
1,3,5-TRIMETHYLBENZENE	MG/M3	ND	0.69	
1,1-DICHLOROETHENE	MG/M3	7.5	0.69	
1,1,1-TRICHLOROETHANE	MG/M3	3.3	0.69	

AnalyticalTechnologies,Inc.

"FINAL REPORT FORMAT - SINGLE"

Accession:	512212
Client:	ANALYTICAL TECHNOLOGIES, INC.
Project Number:	512316
Project Name:	PERSON STATION
Project Location:	PSN
Test:	TO14
Analysis Method:	TO 14 / SIM / Compendium of Methods, EPA-600/4-87-006, June 1988.
Extraction Method:	N/A
Matrix:	AIR
QC Level:	I

Lab Id: 001 Sample Date/Time: 06-DEC-95 1007
Client Sample Id: 512316-01 Received Date: 07-DEC-95

Parameter:	Units:	Results:	Rpt Lmts:	Q:
TRICHLOROTRIFLUOROETHANE	MG/M3	ND	0.69	
4-ETHYLTOLUENE	MG/M3	ND	0.69	
BROMOFLUOROBENZENE	%REC/SURR	106	86-115	
1,2-DICHLOROETHANE-D4	%REC/SURR	107	76-114	
TOLUENE-D8	%REC/SURR	95	81-117	
ANALYST	INITIALS	LL		

Comments:

AnalyticalTechnologies,Inc.

"FINAL REPORT FORMAT - SINGLE"

Accession: 512212
Client: ANALYTICAL TECHNOLOGIES, INC.
Project Number: 512316
Project Name: PERSON STATION
Project Location: PSN
Test: TO14
Analysis Method: TO 14 / SIM / Compendium of Methods, EPA-600/4-87-006, June 1988.
Extraction Method: N/A
Matrix: AIR
QC Level: I

Lab Id: 002
Client Sample Id: 512316-02

Sample Date/Time: 06-DEC-95 1009
Received Date: 07-DEC-95

Batch: MAB180
Blank: A

Dry Weight %: N/A

Extraction Date: N/A
Analysis Date: 19-DEC-95

Parameter:	Units:	Results:	Rpt Lmts:	Q:
ALPHA-CHLOROTOLUENE	MG/M3	ND	0.75	
BENZENE	MG/M3	ND	0.75	
BROMOMETHANE	MG/M3	ND	0.75	
CARBON TETRACHLORIDE	MG/M3	ND	0.75	
CHLOROBENZENE	MG/M3	ND	0.75	
CHLOROETHANE	MG/M3	ND	0.75	
CHLOROFORM	MG/M3	ND	0.75	
CHLOROMETHANE	MG/M3	ND	0.75	
CIS 1,2 DICHLOROETHYLENE	MG/M3	ND	0.75	
DICHLORODIFLUOROMETHANE	MG/M3	ND	0.75	
1,1-DICHLOROETHANE	MG/M3	ND	0.75	
1,2-DICHLOROETHANE	MG/M3	ND	0.75	
1,2-DICHLOROPROPANE	MG/M3	ND	0.75	
CIS-1,3-DICHLOROPROPENE	MG/M3	ND	0.75	
TRANS-1,3-DICHLOROPROPENE	MG/M3	ND	0.75	
DICHLOROTETRAFLUOROETHANE	MG/M3	ND	0.75	
ETHYL BENZENE	MG/M3	ND	0.75	
HEXACHLOROBUTADIENE	MG/M3	ND	0.75	
M-DICHLOROBENZENE	MG/M3	ND	0.75	
M,P-XYLENE	MG/M3	ND	0.75	
METHYLENE CHLORIDE	MG/M3	ND	1.8	
O-DICHLOROBENZENE	MG/M3	ND	0.75	
O-XYLENE	MG/M3	ND	0.75	
P-DICHLOROBENZENE	MG/M3	ND	0.75	
STYRENE	MG/M3	ND	0.75	
1,1,2,2-TETRACHLOROETHANE	MG/M3	ND	0.75	
TETRACHLOROETHYLENE	MG/M3	ND	0.75	
TOLUENE	MG/M3	ND	0.75	
1,1,2-TRICHLOROETHANE	MG/M3	ND	0.75	
TRICHLOROETHYLENE	MG/M3	ND	0.75	
TRICHLOROFLUOROMETHANE	MG/M3	ND	0.75	
VINYL CHLORIDE	MG/M3	ND	0.75	
1,2-DIBROMOETHANE (EDB)	MG/M3	ND	0.75	
1,2,4 TRICHLOROBENZENE	MG/M3	ND	0.75	
1,2,4-TRIMETHYLBENZENE	MG/M3	ND	0.75	
1,3,5-TRIMETHYLBENZENE	MG/M3	ND	0.75	
1,1-DICHLOROETHENE	MG/M3	10	0.75	
1,1,1-TRICHLOROETHANE	MG/M3	ND	0.75	

AnalyticalTechnologies,Inc.

"FINAL REPORT FORMAT - SINGLE"

Accession:	512212
Client:	ANALYTICAL TECHNOLOGIES, INC.
Project Number:	512316
Project Name:	PERSON STATION
Project Location:	PSN
Test:	TO14
Analysis Method:	TO 14 / SIM / Compendium of Methods, EPA-600/4-87-006, June 1988.
Extraction Method:	N/A
Matrix:	AIR
QC Level:	I

Lab Id: 002 Sample Date/Time: 06-DEC-95 1009
Client Sample Id: 512316-02 Received Date: 07-DEC-95

Parameter:	Units:	Results:	Rpt Lmts:	Q:
TRICHLOROTRIFLUOROETHANE	MG/M3	ND	0.75	
4-ETHYLTOLUENE	MG/M3	ND	0.75	
BROMOFLUOROBENZENE	%REC/SURR	105	86-115	
1,2-DICHLOROETHANE-D4	%REC/SURR	107	76-114	
TOLUENE-D8	%REC/SURR	99	81-117	
ANALYST	INITIALS	LL		

Comments:

AnalyticalTechnologies,Inc.

"Method Report Summary"

Accession Number: 512212
Client: ANALYTICAL TECHNOLOGIES, INC.
Project Number: 512316
Project Name: PERSON STATION
Project Location: PSN
Test: TO14

Client Sample Id:	Parameter:	Unit:	Result:
512316-01	TETRACHLOROETHYLENE	MG/M3	14
	1,1-DICHLOROETHENE	MG/M3	7.5
	1,1,1-TRICHLOROETHANE	MG/M3	3.3
512316-02	1,1-DICHLOROETHENE	MG/M3	10

AnalyticalTechnologies,Inc.

"QC Report"

Title: Bag/Can Blank
Batch: MAB180
Analysis Method: TO 14 / SIM / Compendium of Methods, EPA-600/4-87-006, June 1988.
Extraction Method: N/A

Blank Id: A Date Analyzed: 19-DEC-95 Date Extracted: N/A

Parameters:	Units:	Results:	Reporting Limits:
ALPHA-CHLOROTOLUENE	MG/M3	ND	0.03
ACROLEIN	MG/M3	ND	1.0
ACETONE	MG/M3	ND	0.1
ACRYLONITRILE	MG/M3	ND	1.0
BENZENE	MG/M3	ND	0.03
BROMOMETHANE	MG/M3	ND	0.03
BROMOFORM	MG/M3	ND	0.03
2-BUTANONE	MG/M3	ND	0.10
BROMODICHLOROMETHANE	MG/M3	ND	0.03
CARBON TETRACHLORIDE	MG/M3	ND	0.03
CARBON DISULFIDE	MG/M3	ND	0.03
CHLOROBENZENE	MG/M3	ND	0.03
CHLOROETHANE	MG/M3	ND	0.03
CHLOROFORM	MG/M3	ND	0.03
CHLOROMETHANE	MG/M3	ND	0.03
CIS 1,2 DICHLOROETHYLENE	MG/M3	ND	0.03
TRANS 1,2 DICHLOROETHYLENE	MG/M3	ND	0.03
DICHLORODIFLUOROMETHANE	MG/M3	ND	0.03
DIBROMOCHLOROMETHANE	MG/M3	ND	0.03
1,1-DICHLOROETHANE	MG/M3	ND	0.03
1,2-DICHLOROETHANE	MG/M3	ND	0.03
1,2-DICHLOROPROPANE	MG/M3	ND	0.03
CIS-1,3-DICHLOROPROPENE	MG/M3	ND	0.03
TRANS-1,3-DICHLOROPROPENE	MG/M3	ND	0.03
DICHLOROTETRAFLUOROETHANE	MG/M3	ND	0.03
1,4-DICHLORO-2-BUTENE	MG/M3	ND	0.03
ETHYL BENZENE	MG/M3	ND	0.03
HEXACHLOROBUTADIENE	MG/M3	ND	0.03
2-HEXANONE	MG/M3	ND	0.10
M-DICHLOROBENZENE	MG/M3	ND	0.03
M,P-XYLENE	MG/M3	ND	0.03
METHYLENE CHLORIDE	MG/M3	ND	0.07
4-METHYL-2-PENTANONE	MG/M3	ND	0.10
O-DICHLOROBENZENE	MG/M3	ND	0.03
O-XYLENE	MG/M3	ND	0.03
P-DICHLOROBENZENE	MG/M3	ND	0.03
STYRENE	MG/M3	ND	0.03
1,1,2,2-TETRACHLOROETHANE	MG/M3	ND	0.03
TETRACHLOROETHYLENE	MG/M3	ND	0.03
TOLUENE	MG/M3	ND	0.03
1,1,2-TRICHLOROETHANE	MG/M3	ND	0.03
TRICHLOROETHYLENE	MG/M3	ND	0.03
TRICHLOROFLUOROMETHANE	MG/M3	ND	0.03
VINYL CHLORIDE	MG/M3	ND	0.03
VINYL ACETATE	MG/M3	ND	0.03
1,2-DIBROMOETHANE (EDB)	MG/M3	ND	0.03

AnalyticalTechnologies,Inc.

"QC Report"

Title: Bag/Can Blank
Batch: MAB180
Analysis Method: TO 14 / SIM / Compendium of Methods, EPA-600/4-87-006, June 1988.
Extraction Method: N/A

Parameters:	Units:	Results:	Reporting Limits:
1,2,4 TRICHLOROBENZENE	MG/M3	ND	0.03
1,2,4-TRIMETHYLBENZENE	MG/M3	ND	0.03
1,3,5-TRIMETHYLBENZENE	MG/M3	ND	0.03
1,1-DICHLOROETHENE	MG/M3	ND	0.03
1,1,1-TRICHLOROETHANE	MG/M3	ND	0.03
TRICHLOROTRIFLUOROETHANE	MG/M3	ND	0.03
4-ETHYLTOLUENE	MG/M3	ND	0.03
BROMOFLUOROBENZENE	%REC/SURR	100	86-115
1,2-DICHLOROETHANE-D4	%REC/SURR	106	76-114
TOLUENE-D8	%REC/SURR	96	81-117
ANALYST	INITIALS	LL	

Comments:

AnalyticalTechnologies,Inc.

"QC Report"

Title: Bag/Can Reagent
Batch: MAB180
Analysis Method: TO 14 / SIM / Compendium of Methods, EPA-600/4-87-006, June 1988.
Extraction Method: N/A

RS Date Analyzed: 19-Dec-95
RSD Date Analyzed: 19-Dec-95

RS Date Extracted: N/A
RSD Date Extracted: N/A

Parameters:	Spike Added	Sample Conc	RS Conc	RS %Rec	RSD Conc	RSD %Rec	RPD	RPD Lmts	Rec Lmts
1,1-DICHLOROETHENE	2.0	<0.03	2.0	100	2.0	100	0	20	73-123
TRICHLOROETHENE	2.0	<0.03	1.9	95	1.8	90	5	20	82-118
BENZENE	2.0	<0.03	2.1	105	2.0	100	5	20	90-123
TOLUENE	2.0	<0.03	1.9	95	1.8	90	5	20	83-124
CHLOROBENZENE	2.0	<0.03	2.2	110	2.0	100	10	20	88-126
Surrogates:									
1,2-DICHLOROETHANE-D4				111		113			76-114
TOLUENE-D8				97		96			81-117
BROMOFLUOROBENZENE				103		102			86-115

Comments:
DUE TO THE NATURE OF THE SAMPLE MATRIX, MATRIX SPIKE/MATRIX SPIKE DUPLICATE CANNOT BE ANALYZED.

Notes:
N/S = NOT SUBMITTED N/A = NOT APPLICABLE D = DILUTED OUT
MG/M3 = PARTS PER BILLION. < = LESS THAN REPORTING LIMIT.
* = VALUES OUTSIDE OF QUALITY CONTROL LIMITS.
SOURCES FOR CONTROL LIMITS ARE INTERNAL LABORATORY QUALITY ASSURANCE PROGRAM AND REFERENCED METHOD.

AnalyticalTechnologies,Inc.

Common notation for Organic reporting

N/S = NOT SUBMITTED
N/A = NOT APPLICABLE
D = DILUTED OUT
UG/L = PARTS PER BILLION.
UG/KG = PARTS PER BILLION.
MG/KG = PARTS PER MILLION.
MG/L = PARTS PER MILLION.
MG/M3 = MILLIGRAMS PER CUBIC METER.
NG = NANOGRAMS.
UG = MICROGRAMS.
PPBV = PARTS PER BILLION/VOLUME.
< = LESS THAN DETECTION LIMIT.
* = VALUES OUTSIDE OF QUALITY CONTROL LIMITS
J = THE REPORTED VALUE IS EITHER LESS THAN THE REPORTING LIMIT BUT GREATER THAN ZERO, OR QUANTITATED AS A TIC; THEREFORE, IT IS ESTIMATED.
JJ = REPORTED VALUE IS ESTIMATED DUE TO MATRIX INTERFERENCE.
ND = NOT DETECTED ABOVE REPORT LIMIT.
RPT LIMIT = REPORTING LIMITS BASED ON METHOD DETECTION LIMIT STUDIES.
RPD = RELATIVE PERCENT DIFFERENCE (OR DEVIATION)

SOURCES FOR CONTROL LIMITS ARE INTERNAL LABORATORY QUALITY ASSURANCE PROGRAM AND REFERENCED METHOD.

ORGANIC SOILS ARE REPORTED ON A DRY WEIGHT BASIS.

DUE TO THE NATURE OF THE SAMPLE MATRIX, MATRIX SPIKE/MATRIX SPIKE DUPLICATE ANALYSIS CANNOT BE PERFORMED FOR AIR ANALYSIS.

LP = LEVERNE PETERSON	RW = RITA WINGO
DWB = DAVID BOWERS	LD = LARRY DILMORE
DB = DENNIS BESON	DC = DAVID CELESTIAL
LL = LANCE LARSON	RB = RAFAEL BARRAZA
JA = JENNIFER ALEXANDER	PL = PAUL LESCHENSKY

Analytical**Technologies**, Inc.
11 East Olive Road • Pensacola, Florida 32514 • (904) 474-1001

CHAIN OF CUSTODY

PART 1 - Bottle Shipment Information ATI ACCESSION #: 512316

CLIENT: ATI ALBUQUERQUE | CLIENT PROJECT NUMBER:

QUANTITY OF SAMPLE CONTAINERS SHIPPED	PRESERVATIVE							PLASTIC CONTAINERS							GLASS CONTAINERS									NOTES
	H_2SO_4	HNO3	HCL	Zn Acetate	$Na_2S_2O_3$	Unpreserved	NaOH	8 oz.	16 oz.	32 oz.	½ gallon	1 gallon	Whirl-pak	100-ML Cup	120 ml (A)	1 liter (A)	1 liter (C)	40 ml Vial	4 oz. wm	8 oz. wm	16 oz. wm	32 oz. wm	D.I. Trip Blank	
3									6						6 L Summa									

Relinquished By:	Time	Date	Received By:	Time	Date
[signature]	1645	27 Nov 95	Andrew Parker	0940	11/28

PART 2 - Sample/Project Information

SAMPLE MATRIX CODES

DW	DRINKING WATER	AI	AIR	SW	SURFACE WATER
WW	WASTEWATER	SO	SOIL	SL	SLUDGE
GW	GROUNDWATER	OI	OIL	ST	STORMWATER

PARAMETERS AND PRESERVATIVES REQUESTED

SAMPLE I.D.	SAMPLE DATE	SAMPLE TIME	MATRIX	TO-14	TOTAL # OF BOTTLES
Apor Extraction Tinker	12-6-95	1007	AI	X	1
Apor Extraction Gatkey	12-6-95	1005	AI	X	1

Total Number of Bottles/Containers:

Relinquished By	Date	Time	Received By	Date	Time
Andrew Parker	11/28	0940	[signature]	11-29-95	0852
[signature]	12-6-95	1030	Andrew Parker	12/6	1040

Client	PNM		Purchase Order Number
Address	4400 Mesa Del Norte		Project Number
City	ABQ N.M.	State NM / Zip 87113	Project Name Persian Station Remediation Project
Phone Number	(505) 241-2576	Fax Number (505) 241-2457	Project Location Pers. Station
Project Manager	Steve Anderson		Sampled By C. Ar[illegible]

TURNAROUND TIMES	check below	SPECIAL INSTRUCTIONS
Standard - 14-21 days	✓	
RUSH (must be approved in advance)		
24 - 48 hours - 2x standard price		
3-7 days - 1.5x standard price		
TCLP - 1 week rush 1.5x standard price		
QC Level none I II III IV (circle one)		Copies of report needed _____

Analytical Technologies of New Mexico, Inc.
Albuquerque, New Mexico

Interlab Chain of Custody

DATE: 12/6 PAGE: 1 OF 1

NETWORK PROJECT MANAGER: KIMBERLY D. McNEILL

COMPANY: Analytical Technologies of New Mexico, Inc.
ADDRESS: 2709-D Pan American Freeway, NE
Albuquerque, NM 87107

CLIENT PROJECT MANAGER: Kim McNeill

ANALYSIS REQUEST

SAMPLE ID	DATE	TIME	MATRIX	LAB ID	Metals - TAL	Metals - PP List	Metals - RCRA	RCRA Metals by TCLP (1311)			TOX	TOC	Gen Chemistry			Oil and Grease	BOD	COD	Pesticides/PCB (608/8080)	Herbicides (615/8150)	Base/Neutral Acid Compounds GC/MS (625/8270)	Volatile Organics GC/MS (624/8240)	Polynuclear Aromatics (610/8310)	8240 (TCLP 1311) ZHE	8270 (TCLP 1311)			TO-14	Gross Alpha/Beta				NUMBER OF CONTAINERS
512316-01	12/6	1007	AIR	1																								X					
-02	↓	1009	↓	2																								X					

PROJECT INFORMATION	
PROJECT NUMBER:	512316
PROJECT NAME:	Person Station
QC LEVEL:	(STD) IV
QC REQUIRED:	MS MSD BLANK
TAT:	(STANDARD) RUSH!

SAMPLE RECEIPT	
TOTAL NUMBER OF CONTAINERS	2
CHAIN OF CUSTODY SEALS	X
INTACT?	Y
RECEIVED GOOD COND./COLD	N/A
LAB NUMBER	512212

IWO# KM1127

DUE DATE: 12/18
RUSH SURCHARGE: NO
CLIENT DISCOUNT: Quote
SPECIAL CERTIFICATION REQUIRED: ☐ YES ☐ NO

SAMPLES SENT TO:	
SAN DIEGO	
FT. COLLINS	
RENTON	
PENSACOLA	X
PORTLAND	
PHOENIX	

RELINQUISHED BY: 1.	RELINQUISHED BY: 2.
Signature: Andrew Parker Time: 1700	Signature: Time:
Printed Name: Andrew Parker Date: 12/6	Printed Name: Date:
Analytical Technologies of New Mexico, Inc. Albuquerque	Company:
RECEIVED BY: 1.	**RECEIVED BY: (LAB) 2.**
Signature: Time:	Signature: Time: 0955
Printed Name: Date:	Printed Name: R. ELS PERMAN Date: 12/7/95
Company:	Company:

"FINAL REPORT FORMAT - SINGLE"

Accession: 603380
Client: AMERICAN ENVIRONMENTAL NETWORK OF NEW MEXICO
Project Number: 603347
Project Name: PSN
Project Location: PERSON STATION
Test: TO14
Analysis Method: TO 14 / SIM / Compendium of Methods, EPA-600/4-87-006, June 1988.
Extraction Method: N/A
Matrix: AIR
QC Level: I

Lab Id: 002 (VEW-Influent) Sample Date/Time: 20-MAR-96 1105
Client Sample Id: 603347-10 Received Date: 21-MAR-96

Batch: MAB031 Extraction Date: N/A
Blank: A Dry Weight %: N/A Analysis Date: 01-APR-96

Parameter:	Units:	Results:	Rpt Lmts:	Q:
ALPHA-CHLOROTOLUENE	MG/M3	ND	1.5	
BENZENE	MG/M3	ND	1.5	
BROMOMETHANE	MG/M3	ND	1.5	
CARBON TETRACHLORIDE	MG/M3	ND	1.5	
CHLOROBENZENE	MG/M3	ND	1.5	
CHLOROETHANE	MG/M3	ND	1.5	
CHLOROFORM	MG/M3	ND	1.5	
CHLOROMETHANE	MG/M3	ND	1.5	
CIS 1,2 DICHLOROETHYLENE	MG/M3	ND	1.5	
DICHLORODIFLUOROMETHANE	MG/M3	ND	1.5	
1,1-DICHLOROETHANE	MG/M3	ND	1.5	
1,2-DICHLOROETHANE	MG/M3	ND	1.5	
1,2-DICHLOROPROPANE	MG/M3	ND	1.5	
CIS-1,3-DICHLOROPROPENE	MG/M3	ND	1.5	
TRANS-1,3-DICHLOROPROPENE	MG/M3	ND	1.5	
DICHLOROTETRAFLUOROETHANE	MG/M3	ND	1.5	
ETHYL BENZENE	MG/M3	ND	1.5	
HEXACHLOROBUTADIENE	MG/M3	ND	1.5	
M-DICHLOROBENZENE	MG/M3	ND	1.5	
M,P-XYLENE	MG/M3	2.8	1.5	
METHYLENE CHLORIDE	MG/M3	ND	3.6	
O-DICHLOROBENZENE	MG/M3	ND	1.5	
O-XYLENE	MG/M3	ND	1.5	
P-DICHLOROBENZENE	MG/M3	ND	1.5	
STYRENE	MG/M3	ND	1.5	
1,1,2,2-TETRACHLOROETHANE	MG/M3	ND	1.5	
TETRACHLOROETHYLENE	MG/M3	18	1.5	
TOLUENE	MG/M3	ND	1.5	
1,1,2-TRICHLOROETHANE	MG/M3	ND	1.5	
TRICHLOROETHYLENE	MG/M3	ND	1.5	
TRICHLOROFLUOROMETHANE	MG/M3	ND	1.5	
VINYL CHLORIDE	MG/M3	ND	1.5	
1,2-DIBROMOETHANE (EDB)	MG/M3	ND	1.5	
1,2,4 TRICHLOROBENZENE	MG/M3	ND	1.5	
1,2,4-TRIMETHYLBENZENE	MG/M3	ND	1.5	
1,3,5-TRIMETHYLBENZENE	MG/M3	ND	1.5	
1,1-DICHLOROETHENE	MG/M3	6.6	1.5	
1,1,1-TRICHLOROETHANE	MG/M3	2.7	1.5	

"FINAL REPORT FORMAT - SINGLE"

Accession: 603380
Client: AMERICAN ENVIRONMENTAL NETWORK OF NEW MEXICO
Project Number: 603347
Project Name: PSN
Project Location: PERSON STATION
Test: TO14
Analysis Method: TO 14 / SIM / Compendium of Methods, EPA-600/4-87-006, June 1988.
Extraction Method: N/A
Matrix: AIR
QC Level: I

Lab Id: 002 (VEW Influent) Sample Date/Time: 20-MAR-96 1105
Client Sample Id: 603347-10 Received Date: 21-MAR-96

Parameter:	Units:	Results:	Rpt Lmts:.	Q:
TRICHLOROTRIFLUOROETHANE	MG/M3	ND	1.5	
4-ETHYLTOLUENE	MG/M3	ND	1.5	
BROMOFLUOROBENZENE	%REC/SURR	107	86-115	
1,2-DICHLOROETHANE-D4	%REC/SURR	107	76-114	
TOLUENE-D8	%REC/SURR	98	81-117	
ANALYST	INITIALS	LL		

Comments:

"FINAL REPORT FORMAT - SINGLE"

Accession: 603380
Client: AMERICAN ENVIRONMENTAL NETWORK OF NEW MEXICO
Project Number: 603347
Project Name: PSN
Project Location: PERSON STATION
Test: TO14
Analysis Method: TO 14 / SIM / Compendium of Methods, EPA-600/4-87-006, June 1988.
Extraction Method: N/A
Matrix: AIR
QC Level: I

Lab Id: 003 (VEW Effluent)
Client Sample Id: 603347-11

Sample Date/Time: 20-MAR-96 1107
Received Date: 21-MAR-96

Batch: MAB031
Blank: A

Dry Weight %: N/A

Extraction Date: N/A
Analysis Date: 01-APR-96

Parameter:	Units:	Results:	Rpt Lmts:	Q:
ALPHA-CHLOROTOLUENE	MG/M3	ND	0.07	
BENZENE	MG/M3	ND	0.07	
BROMOMETHANE	MG/M3	ND	0.07	
CARBON TETRACHLORIDE	MG/M3	ND	0.07	
CHLOROBENZENE	MG/M3	ND	0.07	
CHLOROETHANE	MG/M3	ND	0.07	
CHLOROFORM	MG/M3	ND	0.07	
CHLOROMETHANE	MG/M3	ND	0.07	
CIS 1,2 DICHLOROETHYLENE	MG/M3	ND	0.07	
DICHLORODIFLUOROMETHANE	MG/M3	ND	0.07	
1,1-DICHLOROETHANE	MG/M3	ND	0.07	
1,2-DICHLOROETHANE	MG/M3	ND	0.07	
1,2-DICHLOROPROPANE	MG/M3	ND	0.07	
CIS-1,3-DICHLOROPROPENE	MG/M3	ND	0.07	
TRANS-1,3-DICHLOROPROPENE	MG/M3	ND	0.07	
DICHLOROTETRAFLUOROETHANE	MG/M3	ND	0.07	
ETHYL BENZENE	MG/M3	ND	0.07	
HEXACHLOROBUTADIENE	MG/M3	ND	0.07	
M-DICHLOROBENZENE	MG/M3	ND	0.07	
M,P-XYLENE	MG/M3	ND	0.07	
METHYLENE CHLORIDE	MG/M3	ND	0.2	
O-DICHLOROBENZENE	MG/M3	ND	0.07	
O-XYLENE	MG/M3	ND	0.07	
P-DICHLOROBENZENE	MG/M3	ND	0.07	
STYRENE	MG/M3	ND	0.07	
1,1,2,2-TETRACHLOROETHANE	MG/M3	ND	0.07	
TETRACHLOROETHYLENE	MG/M3	0.08	0.07	
TOLUENE	MG/M3	ND	0.07	
1,1,2-TRICHLOROETHANE	MG/M3	ND	0.07	
TRICHLOROETHYLENE	MG/M3	ND	0.07	
TRICHLOROFLUOROMETHANE	MG/M3	ND	0.07	
VINYL CHLORIDE	MG/M3	ND	0.07	
1,2-DIBROMOETHANE (EDB)	MG/M3	ND	0.07	
1,2,4 TRICHLOROBENZENE	MG/M3	ND	0.07	
1,2,4-TRIMETHYLBENZENE	MG/M3	ND	0.07	
1,3,5-TRIMETHYLBENZENE	MG/M3	ND	0.07	
1,1-DICHLOROETHENE	MG/M3	ND	0.07	
1,1,1-TRICHLOROETHANE	MG/M3	ND	0.07	

"FINAL REPORT FORMAT - SINGLE"

Accession: 603380
Client: AMERICAN ENVIRONMENTAL NETWORK OF NEW MEXICO
Project Number: 603347
Project Name: PSN
Project Location: PERSON STATION
Test: TO14
Analysis Method: TO 14 / SIM / Compendium of Methods, EPA-600/4-87-006, June 1988.
Extraction Method: N/A
Matrix: AIR
QC Level: I

Lab Id: 003 (VEW Effluent) Sample Date/Time: 20-MAR-96 1107
Client Sample Id: 603347-11 Received Date: 21-MAR-96

Parameter:	Units:	Results:	Rpt Lmts:	Q:
TRICHLOROTRIFLUOROETHANE	MG/M3	ND	0.07	
4-ETHYLTOLUENE	MG/M3	ND	0.07	
BROMOFLUOROBENZENE	%REC/SURR	103	86-115	
1,2-DICHLOROETHANE-D4	%REC/SURR	106	76-114	
TOLUENE-D8	%REC/SURR	101	81-117	
ANALYST	INITIALS	LL		

Comments:

"FINAL REPORT FORMAT - SINGLE"

Accession: 603380
Client: AMERICAN ENVIRONMENTAL NETWORK OF NEW MEXICO
Project Number: 603347
Project Name: PSN
Project Location: PERSON STATION
Test: TO14
Analysis Method: TO 14 / SIM / Compendium of Methods, EPA-600/4-87-006, June 1988.
Extraction Method: N/A
Matrix: AIR
QC Level: I

Lab Id: 002 (VEW-Influent) Sample Date/Time: 20-MAR-96 1105
Client Sample Id: 603347-10 Received Date: 21-MAR-96

Batch: MAB031 Extraction Date: N/A
Blank: A Dry Weight %: N/A Analysis Date: 01-APR-96

Parameter:	Units:	Results:	Rpt Lmts:	Q:
ALPHA-CHLOROTOLUENE	MG/M3	ND	1.5	
BENZENE	MG/M3	ND	1.5	
BROMOMETHANE	MG/M3	ND	1.5	
CARBON TETRACHLORIDE	MG/M3	ND	1.5	
CHLOROBENZENE	MG/M3	ND	1.5	
CHLOROETHANE	MG/M3	ND	1.5	
CHLOROFORM	MG/M3	ND	1.5	
CHLOROMETHANE	MG/M3	ND	1.5	
CIS 1,2 DICHLOROETHYLENE	MG/M3	ND	1.5	
DICHLORODIFLUOROMETHANE	MG/M3	ND	1.5	
1,1-DICHLOROETHANE	MG/M3	ND	1.5	
1,2-DICHLOROETHANE	MG/M3	ND	1.5	
1,2-DICHLOROPROPANE	MG/M3	ND	1.5	
CIS-1,3-DICHLOROPROPENE	MG/M3	ND	1.5	
TRANS-1,3-DICHLOROPROPENE	MG/M3	ND	1.5	
DICHLOROTETRAFLUOROETHANE	MG/M3	ND	1.5	
ETHYL BENZENE	MG/M3	ND	1.5	
HEXACHLOROBUTADIENE	MG/M3	ND	1.5	
M-DICHLOROBENZENE	MG/M3	ND	1.5	
M,P-XYLENE	MG/M3	2.8	1.5	
METHYLENE CHLORIDE	MG/M3	ND	3.6	
O-DICHLOROBENZENE	MG/M3	ND	1.5	
O-XYLENE	MG/M3	ND	1.5	
P-DICHLOROBENZENE	MG/M3	ND	1.5	
STYRENE	MG/M3	ND	1.5	
1,1,2,2-TETRACHLOROETHANE	MG/M3	ND	1.5	
TETRACHLOROETHYLENE	MG/M3	18	1.5	
TOLUENE	MG/M3	ND	1.5	
1,1,2-TRICHLOROETHANE	MG/M3	ND	1.5	
TRICHLOROETHYLENE	MG/M3	ND	1.5	
TRICHLOROFLUOROMETHANE	MG/M3	ND	1.5	
VINYL CHLORIDE	MG/M3	ND	1.5	
1,2-DIBROMOETHANE (EDB)	MG/M3	ND	1.5	
1,2,4 TRICHLOROBENZENE	MG/M3	ND	1.5	
1,2,4-TRIMETHYLBENZENE	MG/M3	ND	1.5	
1,3,5-TRIMETHYLBENZENE	MG/M3	ND	1.5	
1,1-DICHLOROETHENE	MG/M3	6.6	1.5	
1,1,1-TRICHLOROETHANE	MG/M3	2.7	1.5	

"FINAL REPORT FORMAT - SINGLE"

Accession: 603380
Client: AMERICAN ENVIRONMENTAL NETWORK OF NEW MEXICO
Project Number: 603347
Project Name: PSN
Project Location: PERSON STATION
Test: TO14
Analysis Method: TO 14 / SIM / Compendium of Methods, EPA-600/4-87-006, June 1988.
Extraction Method: N/A
Matrix: AIR
QC Level: I

Lab Id: 002 (VEW Influent) Sample Date/Time: 20-MAR-96 1105
Client Sample Id: 603347-10 Received Date: 21-MAR-96

Parameter:	Units:	Results:	Rpt Lmts:	Q:
TRICHLOROTRIFLUOROETHANE	MG/M3	ND	1.5	
4-ETHYLTOLUENE	MG/M3	ND	1.5	
BROMOFLUOROBENZENE	%REC/SURR	107	86-115	
1,2-DICHLOROETHANE-D4	%REC/SURR	107	76-114	
TOLUENE-D8	%REC/SURR	98	81-117	
ANALYST	INITIALS	LL		

Comments:

"FINAL REPORT FORMAT - SINGLE"

Accession: 603380
Client: AMERICAN ENVIRONMENTAL NETWORK OF NEW MEXICO
Project Number: 603347
Project Name: PSN
Project Location: PERSON STATION
Test: TO14
Analysis Method: TO 14 / SIM / Compendium of Methods, EPA-600/4-87-006, June 1988.
Extraction Method: N/A
Matrix: AIR
QC Level: I

Lab Id: 003 (VEW Effluent)
Client Sample Id: 603347-11

Sample Date/Time: 20-MAR-96 1107
Received Date: 21-MAR-96

Batch: MAB031
Blank: A
Dry Weight %: N/A

Extraction Date: N/A
Analysis Date: 01-APR-96

Parameter:	Units:	Results:	Rpt Lmts:	Q:
ALPHA-CHLOROTOLUENE	MG/M3	ND	0.07	
BENZENE	MG/M3	ND	0.07	
BROMOMETHANE	MG/M3	ND	0.07	
CARBON TETRACHLORIDE	MG/M3	ND	0.07	
CHLOROBENZENE	MG/M3	ND	0.07	
CHLOROETHANE	MG/M3	ND	0.07	
CHLOROFORM	MG/M3	ND	0.07	
CHLOROMETHANE	MG/M3	ND	0.07	
CIS 1,2 DICHLOROETHYLENE	MG/M3	ND	0.07	
DICHLORODIFLUOROMETHANE	MG/M3	ND	0.07	
1,1-DICHLOROETHANE	MG/M3	ND	0.07	
1,2-DICHLOROETHANE	MG/M3	ND	0.07	
1,2-DICHLOROPROPANE	MG/M3	ND	0.07	
CIS-1,3-DICHLOROPROPENE	MG/M3	ND	0.07	
TRANS-1,3-DICHLOROPROPENE	MG/M3	ND	0.07	
DICHLOROTETRAFLUOROETHANE	MG/M3	ND	0.07	
ETHYL BENZENE	MG/M3	ND	0.07	
HEXACHLOROBUTADIENE	MG/M3	ND	0.07	
M-DICHLOROBENZENE	MG/M3	ND	0.07	
M,P-XYLENE	MG/M3	ND	0.07	
METHYLENE CHLORIDE	MG/M3	ND	0.2	
O-DICHLOROBENZENE	MG/M3	ND	0.07	
O-XYLENE	MG/M3	ND	0.07	
P-DICHLOROBENZENE	MG/M3	ND	0.07	
STYRENE	MG/M3	ND	0.07	
1,1,2,2-TETRACHLOROETHANE	MG/M3	ND	0.07	
TETRACHLOROETHYLENE	MG/M3	0.08	0.07	
TOLUENE	MG/M3	ND	0.07	
1,1,2-TRICHLOROETHANE	MG/M3	ND	0.07	
TRICHLOROETHYLENE	MG/M3	ND	0.07	
TRICHLOROFLUOROMETHANE	MG/M3	ND	0.07	
VINYL CHLORIDE	MG/M3	ND	0.07	
1,2-DIBROMOETHANE (EDB)	MG/M3	ND	0.07	
1,2,4 TRICHLOROBENZENE	MG/M3	ND	0.07	
1,2,4-TRIMETHYLBENZENE	MG/M3	ND	0.07	
1,3,5-TRIMETHYLBENZENE	MG/M3	ND	0.07	
1,1-DICHLOROETHENE	MG/M3	ND	0.07	
1,1,1-TRICHLOROETHANE	MG/M3	ND	0.07	

"FINAL REPORT FORMAT - SINGLE"

Accession: 603380
Client: AMERICAN ENVIRONMENTAL NETWORK OF NEW MEXICO
Project Number: 603347
Project Name: PSN
Project Location: PERSON STATION
Test: TO14
Analysis Method: TO 14 / SIM / Compendium of Methods, EPA-600/4-87-006, June 1988.
Extraction Method: N/A
Matrix: AIR
QC Level: I

Lab Id: 003 (VEW Effluent) Sample Date/Time: 20-MAR-96 1107
Client Sample Id: 603347-11 Received Date: 21-MAR-96

Parameter:	Units:	Results:	Rpt Lmts:	Q:
TRICHLOROTRIFLUOROETHANE	MG/M3	ND	0.07	
4-ETHYLTOLUENE	MG/M3	ND	0.07	
BROMOFLUOROBENZENE	%REC/SURR	103	86-115	
1,2-DICHLOROETHANE-D4	%REC/SURR	106	76-114	
TOLUENE-D8	%REC/SURR	101	81-117	
ANALYST	INITIALS	LL		

Comments:

American Environmental Network, Inc.

AEN I.D. 609352

October 11, 1996

Public Service Company
4400 Paseo Del Norte
Albuquerque, NM 87113

Project Name/Number: (NONE)

Attention: Chuck Arater

On 09/24/96, American Environmental Network (NM), Inc., (ADHS License No. AZ0015) received a request to analyze air samples. The samples were analyzed with EPA methodology or equivalent methods. The results of these analyses and the quality control data, which follow each set of analyses, are enclosed.

All analyses were performed by American Environmental Network (FL) Inc., 11 east East Olive Road, Pensacola, FL.

If you have any questions or comments, please do not hesitate to contact us at (505) 344-3777.

Kimberly D. McNeill
Project Manager

H. Mitchell Rubenstein, Ph.D.
General Manager

MR:ft

Enclosure

CLIENT : PUBLIC SERVICE COMPANY DATE 09/24/96
PROJECT # : (NONE)
PROJECT NAME : (NONE) REPORT DATE: 10/11/96

AEN ID: 609352

	AEN ID #	CLIENT DESCRIPTION	MATRIX	DATE COLLECTED
01	609352-01	VAP. EXTRACTOR INLET	AIR	09/24/96
02	609352-02	VAP. EXTRACTOR OUTLET	AIR	09/24/96

---TOTALS---

MATRIX	#SAMPLES
AIR	2

AEN STANDARD DISPOSAL PRACTICE

The samples from this project will be disposed of in thirty (30) days from the date of this report. If an extended storage period is required, please contact our sample control department before the scheduled disposal date.

"FINAL REPORT FORMAT - SINGLE"

Accession: 609593
Client: AMERICAN ENVIRONMENTAL NETWORK OF NEW MEXICO
Project Number: 609352
Project Name: PNM
Project Location: N/S
Test: TO14
Analysis Method: TO14/SIM/Compendium of Methods, EPA-600/4-87-006, June 1988.
Extraction Method: N/A
Matrix: AIR
QC Level: I

Lab Id: 001
Client Sample Id: VAPOR EXTRACTOR INLET
Sample Date/Time: 24-SEP-96 1029
Received Date: 26-SEP-96

Batch: MAB111
Blank: A
Dry Weight %: N/A
Extraction Date: N/A
Analysis Date: 03-OCT-96

Parameter:	Units:	Results:	Rpt Lmts:	Q:
ALPHA-CHLOROTOLUENE	MG/M3	ND	0.07	
BENZENE	MG/M3	ND	0.07	
BROMOMETHANE	MG/M3	ND	0.07	
CARBON TETRACHLORIDE	MG/M3	ND	0.07	
CHLOROBENZENE	MG/M3	ND	0.07	
CHLOROETHANE	MG/M3	ND	0.07	
CHLOROFORM	MG/M3	0.11	0.07	
CHLOROMETHANE	MG/M3	ND	0.07	
CIS 1,2 DICHLOROETHYLENE	MG/M3	ND	0.07	
DICHLORODIFLUOROMETHANE	MG/M3	ND	0.07	
1,1-DICHLOROETHANE	MG/M3	ND	0.07	
1,2-DICHLOROETHANE	MG/M3	ND	0.07	
1,2-DICHLOROPROPANE	MG/M3	ND	0.07	
CIS-1,3-DICHLOROPROPENE	MG/M3	ND	0.07	
TRANS-1,3-DICHLOROPROPENE	MG/M3	ND	0.07	
DICHLOROTETRAFLUOROETHANE	MG/M3	ND	0.07	
ETHYL BENZENE	MG/M3	ND	0.07	
HEXACHLOROBUTADIENE	MG/M3	ND	0.07	
M-DICHLOROBENZENE	MG/M3	ND	0.07	
M,P-XYLENE	MG/M3	ND	0.07	
METHYLENE CHLORIDE	MG/M3	ND	0.2	
O-DICHLOROBENZENE	MG/M3	ND	0.07	
O-XYLENE	MG/M3	ND	0.07	
P-DICHLOROBENZENE	MG/M3	ND	0.07	
STYRENE	MG/M3	ND	0.07	
1,1,2,2-TETRACHLOROETHANE	MG/M3	ND	0.07	
TETRACHLOROETHYLENE	MG/M3	3.3	0.07	
TOLUENE	MG/M3	ND	0.07	
1,1,2-TRICHLOROETHANE	MG/M3	ND	0.07	
TRICHLOROETHYLENE	MG/M3	ND	0.07	
TRICHLOROFLUOROMETHANE	MG/M3	ND	0.07	
VINYL CHLORIDE	MG/M3	ND	0.07	
1,2-DIBROMOETHANE (EDB)	MG/M3	ND	0.07	
1,2,4 TRICHLOROBENZENE	MG/M3	ND	0.07	
1,2,4-TRIMETHYLBENZENE	MG/M3	ND	0.07	
1,3,5-TRIMETHYLBENZENE	MG/M3	ND	0.07	
1,1-DICHLOROETHENE	MG/M3	1.3	0.07	
1,1,1-TRICHLOROETHANE	MG/M3	0.42	0.07	

"FINAL REPORT FORMAT - SINGLE"

Accession: 609593
Client: AMERICAN ENVIRONMENTAL NETWORK OF NEW MEXICO
Project Number: 609352
Project Name: PNM
Project Location: N/S
Test: TO14
Analysis Method: TO14/SIM/Compendium of Methods, EPA-600/4-87-006, June 1988.
Extraction Method: N/A
Matrix: AIR
QC Level: I

Lab Id: 001
Client Sample Id: VAPOR EXTRACTOR INLET
Sample Date/Time: 24-SEP-96 1029
Received Date: 26-SEP-96

Parameter:	Units:	Results:	Rpt Lmts:	Q:
TRICHLOROTRIFLUOROETHANE	MG/M3	ND	0.07	
4-ETHYLTOLUENE	MG/M3	ND	0.07	
BROMOFLUOROBENZENE	%REC/SURR	104	86-115	
1,2-DICHLOROETHANE-D4	%REC/SURR	94	76-114	
TOLUENE-D8	%REC/SURR	107	81-117	
ANALYST	INITIALS	BV		

Comments:

"FINAL REPORT FORMAT - SINGLE"

Accession: 609593
Client: AMERICAN ENVIRONMENTAL NETWORK OF NEW MEXICO
Project Number: 609352
Project Name: PNM
Project Location: N/S
Test: TO14
Analysis Method: TO14/SIM/Compendium of Methods, EPA-600/4-87-006, June 1988.
Extraction Method: N/A
Matrix: AIR
QC Level: I

Lab Id: 002
Client Sample Id: VAPOR EXTRACTOR OUTLET
Sample Date/Time: 24-SEP-96 1031
Received Date: 26-SEP-96

Batch: MAB111
Blank: A
Dry Weight %: N/A
Extraction Date: N/A
Analysis Date: 03-OCT-96

Parameter:	Units:	Results:	Rpt Lmts:	Q:
ALPHA-CHLOROTOLUENE	MG/M3	ND	0.08	
BENZENE	MG/M3	ND	0.08	
BROMOMETHANE	MG/M3	ND	0.08	
CARBON TETRACHLORIDE	MG/M3	ND	0.08	
CHLOROBENZENE	MG/M3	ND	0.08	
CHLOROETHANE	MG/M3	ND	0.08	
CHLOROFORM	MG/M3	ND	0.08	
CHLOROMETHANE	MG/M3	ND	0.08	
CIS 1,2 DICHLOROETHYLENE	MG/M3	ND	0.08	
DICHLORODIFLUOROMETHANE	MG/M3	ND	0.08	
1,1-DICHLOROETHANE	MG/M3	ND	0.08	
1,2-DICHLOROETHANE	MG/M3	ND	0.08	
1,2-DICHLOROPROPANE	MG/M3	ND	0.08	
CIS-1,3-DICHLOROPROPENE	MG/M3	ND	0.08	
TRANS-1,3-DICHLOROPROPENE	MG/M3	ND	0.08	
DICHLOROTETRAFLUOROETHANE	MG/M3	ND	0.08	
ETHYL BENZENE	MG/M3	ND	0.08	
HEXACHLOROBUTADIENE	MG/M3	ND	0.08	
M-DICHLOROBENZENE	MG/M3	ND	0.08	
M,P-XYLENE	MG/M3	ND	0.08	
METHYLENE CHLORIDE	MG/M3	ND	0.2	
O-DICHLOROBENZENE	MG/M3	ND	0.08	
O-XYLENE	MG/M3	ND	0.08	
P-DICHLOROBENZENE	MG/M3	ND	0.08	
STYRENE	MG/M3	ND	0.08	
1,1,2,2-TETRACHLOROETHANE	MG/M3	ND	0.08	
TETRACHLOROETHYLENE	MG/M3	ND	0.08	
TOLUENE	MG/M3	ND	0.08	
1,1,2-TRICHLOROETHANE	MG/M3	ND	0.08	
TRICHLOROETHYLENE	MG/M3	ND	0.08	
TRICHLOROFLUOROMETHANE	MG/M3	ND	0.08	
VINYL CHLORIDE	MG/M3	ND	0.08	
1,2-DIBROMOETHANE (EDB)	MG/M3	ND	0.08	
1,2,4 TRICHLOROBENZENE	MG/M3	ND	0.08	
1,2,4-TRIMETHYLBENZENE	MG/M3	ND	0.08	
1,3,5-TRIMETHYLBENZENE	MG/M3	ND	0.08	
1,1-DICHLOROETHENE	MG/M3	1.4	0.08	
1,1,1-TRICHLOROETHANE	MG/M3	ND	0.08	

"FINAL REPORT FORMAT - SINGLE"

Accession:	609593
Client:	AMERICAN ENVIRONMENTAL NETWORK OF NEW MEXICO
Project Number:	609352
Project Name:	PNM
Project Location:	N/S
Test:	TO14
Analysis Method:	TO14/SIM/Compendium of Methods, EPA-600/4-87-006, June 1986.
Extraction Method:	N/A
Matrix:	AIR
QC Level:	I

Lab Id: 002 Sample Date/Time: 24-SEP-96 1031
Client Sample Id: VAPOR EXTRACTOR OUTLET Received Date: 26-SEP-96

Parameter:	Units:	Results:	Rpt Lmts:	Q:
TRICHLOROTRIFLUOROETHANE	MG/M3	ND	0.08	
4-ETHYLTOLUENE	MG/M3	ND	0.08	
BROMOFLUOROBENZENE	%REC/SURR	101	86-115	
1,2-DICHLOROETHANE-D4	%REC/SURR	93	76-114	
TOLUENE-D8	%REC/SURR	109	81-117	
ANALYST	INITIALS	BV		

Comments:

"Method Report Summary"

Accession Number: 609593
Client: AMERICAN ENVIRONMENTAL NETWORK OF NEW MEXICO
Project Number: 609352
Project Name: PNM
Project Location: N/S
Test: TO14

Client Sample Id:	Parameter:	Unit:	Result:
VAPOR EXTRACTOR INLET	CHLOROFORM	MG/M3	0.11
	TETRACHLOROETHYLENE	MG/M3	3.3
	1,1-DICHLOROETHENE	MG/M3	1.3
	1,1,1-TRICHLOROETHANE	MG/M3	0.42
VAPOR EXTRACTOR OUTLET	1,1-DICHLOROETHENE	MG/M3	1.4

"QC Report"

Title: Bag/Can Blank
Batch: MAB111
Analysis Method: TO14/SIM/Compendium of Methods, EPA-600/4-87-006, June 1988.
Extraction Method: N/A

Blank Id: A Date Analyzed: 03-OCT-96 Date Extracted: N/A

Parameters:	Units:	Results:	Reporting Limits:
ALPHA-CHLORCTOLUENE	MG/M3	ND	0.03
ACROLEIN	MG/M3	ND	1.0
ACETONE	MG/M3	ND	0.1
ACRYLONITRILE	MG/M3	ND	1.0
BENZENE	MG/M3	ND	0.03
BROMOMETHANE	MG/M3	ND	0.03
BROMOFORM	MG/M3	ND	0.03
2-BUTANONE	MG/M3	ND	0.10
BROMODICHLOROMETHANE	MG/M3	ND	0.03
CARBON TETRACHLORIDE	MG/M3	ND	0.03
CARBON DISULFIDE	MG/M3	ND	0.03
CHLOROBENZENE	MG/M3	ND	0.03
CHLOROETHANE	MG/M3	ND	0.03
CHLOROFORM	MG/M3	ND	0.03
CHLOROMETHANE	MG/M3	ND	0.03
CIS 1,2 DICHLOROETHYLENE	MG/M3	ND	0.03
TRANS 1,2 DICHLOROETHYLENE	MG/M3	ND	0.03
DICHLORODIFLUOROMETHANE	MG/M3	ND	0.03
DIBROMOCHLOROMETHANE	MG/M3	ND	0.03
1,1-DICHLOROETHANE	MG/M3	ND	0.03
1,2-DICHLOROETHANE	MG/M3	ND	0.03
1,2-DICHLOROPROPANE	MG/M3	ND	0.03
CIS-1,3-DICHLOROPROPENE	MG/M3	ND	0.03
TRANS-1,3-DICHLOROPROPENE	MG/M3	ND	0.03
DICHLOROTETRAFLUOROETHANE	MG/M3	ND	0.03
1,4-DICHLORO-2-BUTENE	MG/M3	ND	0.03
ETHYL BENZENE	MG/M3	ND	0.03
HEXACHLOROBUTADIENE	MG/M3	ND	0.03
2-HEXANONE	MG/M3	ND	0.10
M-DICHLOROBENZENE	MG/M3	ND	0.03
M,P-XYLENE	MG/M3	ND	0.03
METHYLENE CHLORIDE	MG/M3	ND	0.07
4-METHYL-2-PENTANONE	MG/M3	ND	0.10
O-DICHLOROBENZENE	MG/M3	ND	0.03
O-XYLENE	MG/M3	ND	0.03
P-DICHLOROBENZENE	MG/M3	ND	0.03
STYRENE	MG/M3	ND	0.03
1,1,2,2-TETRACHLOROETHANE	MG/M3	ND	0.03
TETRACHLOROETHYLENE	MG/M3	ND	0.03
TOLUENE	MG/M3	ND	0.03
1,1,2-TRICHLOROETHANE	MG/M3	ND	0.03
TRICHLOROETHYLENE	MG/M3	ND	0.03
TRICHLOROFLUOROMETHANE	MG/M3	ND	0.03
VINYL CHLORIDE	MG/M3	ND	0.03
VINYL ACETATE	MG/M3	ND	0.03
1,2-DIBROMOETHANE (EDB)	MG/M3	ND	0.03

"QC Report"

Title: Bag/Can Blank
Batch: MAB111
Analysis Method: TO14/SIM/Compendium of Methods, EPA-600/4-87-006, June 1988.
Extraction Method: N/A

Parameters:	Units:	Results:	Reporting Limits:
1,2,4 TRICHLOROBENZENE	MG/M3	ND	0.03
1,2,4-TRIMETHYLBENZENE	MG/M3	ND	0.03
1,3,5-TRIMETHYLBENZENE	MG/M3	ND	0.03
1,1-DICHLOROETHENE	MG/M3	ND	0.03
1,1,1-TRICHLOROETHANE	MG/M3	ND	0.03
TRICHLOROTRIFLUOROETHANE	MG/M3	ND	0.03
4-ETHYLTOLUENE	MG/M3	ND	0.03
BROMOFLUOROBENZENE	%REC/SURR	103	90-111
1,2-DICHLOROETHANE-D4	%REC/SURR	98	85-115
TOLUENE-D8	%REC/SURR	108	85-111
ANALYST	INITIALS	BV	

Comments:

"QC Report"

Title: Bag/Can Reagent
Batch: MAB111
Analysis Method: TO14/SIM/Compendium of Methods, EPA-600/4-87-006, June 1988.
Extraction Method: N/A

RS Date Analyzed: 03-Oct-96
RSD Date Analyzed: 03-Oct-96

RS Date Extracted: N/A
RSD Date Extracted: N/A

Parameters:	Spike Added	Sample Conc	RS Conc	RS %Rec	RSD Conc	RSD %Rec	RPD	RPD Lmts	Rec Lmts
1,1-DICHLOROETHENE	2.0	<0.03	2.0	100	2.0	100	0	15	71-120
TRICHLOROETHENE	2.0	<0.03	2.0	100	2.0	100	0	10	81-112
BENZENE	2.0	<0.03	2.1	105	2.1	105	0	10	86-119
TOLUENE	2.0	<0.03	2.1	105	2.2	110	5	12	79-113
CHLOROBENZENE	2.0	<0.03	2.1	105	2.1	105	0	11	85-120
Surrogates:									
1,2-DICHLOROETHANE-D4				95		95			85-115
TOLUENE-D8				110		111			85-111
BROMOFLUOROBENZENE				101		100			90-111

Comments:
DUE TO THE NATURE OF THE SAMPLE MATRIX, MATRIX SPIKE/MATRIX SPIKE DUPLICATE CANNOT BE ANALYZED.

Notes:
N/S = NOT SUBMITTED N/A = NOT APPLICABLE D = DILUTED OUT
MG/M3 = PARTS PER BILLION. < = LESS THAN REPORTING LIMIT.
* = VALUES OUTSIDE OF QUALITY CONTROL LIMITS.
SOURCES FOR CONTROL LIMITS ARE INTERNAL LABORATORY QUALITY ASSURANCE PROGRAM AND REFERENCED METHOD.

Common notation for Organic reporting

N/S = NOT SUBMITTED
N/A = NOT APPLICABLE
D = DILUTED OUT
UG/L = PARTS PER BILLION.
UG/KG = PARTS PER BILLION.
MG/KG = PARTS PER MILLION.
MG/L = PARTS PER MILLION.
MG/M3 = MILLIGRAMS PER CUBIC METER.
NG = NANOGRAMS.
UG = MICROGRAMS.
PPBV = PARTS PER BILLION/VOLUME.
< = LESS THAN DETECTION LIMIT.
* = VALUES OUTSIDE OF QUALITY CONTROL LIMITS
J = THE REPORTED VALUE IS EITHER LESS THAN THE REPORTING LIMIT BUT GREATER THAN ZERO, OR QUANTITATED AS A TIC; THEREFORE, IT IS ESTIMATED.
JJ = REPORTED VALUE IS ESTIMATED DUE TO MATRIX INTERFERENCE.
ND = NOT DETECTED ABOVE REPORT LIMIT.
RPT LIMIT = REPORTING LIMITS BASED ON METHOD DETECTION LIMIT STUDIES.
RPD = RELATIVE PERCENT DIFFERENCE (OR DEVIATION)

SOURCES FOR CONTROL LIMITS ARE INTERNAL LABORATORY QUALITY ASSURANCE PROGRAM AND REFERENCED METHOD.

ORGANIC SOILS ARE REPORTED ON A DRY WEIGHT BASIS.

DUE TO THE NATURE OF THE SAMPLE MATRIX, MATRIX SPIKE/MATRIX SPIKE DUPLICATE ANALYSIS CANNOT BE PERFORMED FOR AIR ANALYSIS.

CLP SOW 1991, USEPA CONTRACT LABORATORY PROGRAM, STATEMENT OF WORK FOR ORGANICS ANALYSIS, DOCUMENT NUMBER OLM01.8, AUGUST 1991.

LP = LEVERNE PETERSON	RW = RITA WINGO
LD = LARRY DILMORE	LL = LANCE LARSON
PL = PAUL LESCHENSKY	BV = BEN VAUGHN

ATTACHMENT 5

PHASE I
SVE PILOT TEST EMISSION CALCULATIONS

ENGINEERING SCIENCE

1700 Broadway, Suite 900
Denver, CO. 80290

EPA METHOD TO-14 EMISSION CALCULATION SHEET
FOR THE
MAGNEHELIC GAUGE MEASURED IN INCHES OF H20

CLIENT: PSNM	JOB NO. 722445	CHECKED:
SHEET:	BY: JFH	AREA 1
DATE: 34548 9/2/94	REV:	FILE: PNMAREA1.XLS
SUBJECT: INITIAL CARBON LOADING SAMPLE VW1		
COMMENTS: DURATION 11 HRS		

	EMISSION RATE (lb/hr)	EMISSION RATE (lb/day)	EMISSION RATE (lb/yr)	EMISSION RATE (ton/yr)	TOTAL EMISSION (lbs)
Freon 12	0.000	0.000	0	0.0000	0.00
Freon 114	0.000	0.000	0	0.0000	0.00
Chloromethane	0.000	0.000	0	0.0000	0.00
Vinyl Chloride	0.000	0.000	0	0.0000	0.00
Bromomethane	0.000	0.000	0	0.0000	0.00
Chloroethane	0.000	0.000	0	0.0000	0.00
Freon 11	0.000	0.000	0	0.0000	0.00
1,1-Dichloroethene	0.097	2.317	846	0.4228	1.06
Freon 113	0.000	0.000	0	0.0000	0.00
Methylene Chloride	0.000	0.000	0	0.0000	0.00
1,1-Dichloroethane	0.000	0.000	0	0.0000	0.00
cis-1,2-Dichloroethene	0.000	0.000	0	0.0000	0.00
Chloroform	0.000	0.000	0	0.0000	0.00
1,1,1-Trichloroethane	0.403	9.682	3534	1.7670	4.44
Carbon Tetrachloride	0.000	0.000	0	0.0000	0.00
Benzene	0.000	0.000	0	0.0000	0.00
1,2-Dichloroethane	0.000	0.000	0	0.0000	0.00
Trichloroethene	0.000	0.000	0	0.0000	0.00
1,2-Dichloropropane	0.000	0.000	0	0.0000	0.00
cis-1,3-Dichloropropene	0.000	0.000	0	0.0000	0.00
Toluene	0.000	0.000	0	0.0000	0.00
trans-1,3-Dichloropropene	0.000	0.000	0	0.0000	0.00
1,1,2-Trichloroethane	0.000	0.000	0	0.0000	0.00
Tetrachloroethene	8.562	205.494	75005	37.5027	94.18
Ethylene Dibromide	0.000	0.000	0	0.0000	0.00
Chlorobenzene	0.000	0.000	0	0.0000	0.00
Ethyl Benzene	0.000	0.000	0	0.0000	0.00
m,p-Xylene	0.000	0.000	0	0.0000	0.00
o-Xylene	0.000	0.000	0	0.0000	0.00
Styrene	0.000	0.000	0	0.0000	0.00
1,1,2,2-Tetrachloroethane	0.000	0.000	0	0.0000	0.00
1,3,5-Trimethylbenzene	0.000	0.000	0	0.0000	0.00
1,2,4-Trimethylbenzene	0.032	0.777	283	0.1417	0.36
1,3-Dichlorobenzene	0.000	0.000	0	0.0000	0.00
1,4-Dichlorobenzene	0.000	0.000	0	0.0000	0.00
Chlorotoluene	0.000	0.000	0	0.0000	0.00
1,2-Dichlorobenzene	0.000	0.000	0	0.0000	0.00
1,2,4-Trichlorobenzene	0.000	0.000	0	0.0000	0.00
Hexachlorobutadiene	0.000	0.000	0	0.0000	0.00
BTEX	0.000	0.000	0	0.0000	0.00
TOTAL VOCs	9.095	218.27	79669	39.8343	100.04

ENGINEERING SCIENCE
1700 Broadway, Suite 900
Denver, CO. 80290

EPA METHOD TO-14 EMISSION CALCULATION SHEET
FOR THE
MAGNEHELIC GAUGE MEASURED IN INCHES OF H20

CLIENT: PSNM	JOB NO. 722445	CHECKED:
SHEET:	BY: JFH	AREA 1
DATE: 34548 9/2/94	REV:	FILE: PNMAREA1.XLS
SUBJECT: INITIAL CARBON LOADING SAMPLE VW1		
COMMENTS: DURATION 11 HRS		

EMISSION CALCULATIONS:

ASSUMPTIONS:
R = .0821 liter atm mole-1 K-1

FORMULAS:

Corrected Velocity Pressure (in. H2O) = Uncorrected Velocity Pressure (in. H2O) / Density Factor

Corrected Velocity (fpm) = Corrected Velocity Pressure (in H2O) x Pipe Dia. Factor x [Corrected Velocity Pressure]^1/2
Q (cfm) = Corrected Velocity (fpm) x Pipe Cross Sectional Area (ft^2)

RT (liter atm /mole) = .0821 (liter atm /mole K) x Temperature (K)

TVH (mg/L) = [Chm Conc (ppmV) x Chm MW (g/mole) x 1000 (mg/g) x 1 /10E6 (ppm)] / [RT (liter atm/mole)]
RATE (lb/hr) = TVH (mg/L) x Q (ft^3/min) x 60 (min/hr) x .02832 (m^3/ft^3) x 1000 (L/m^3) x 1 /453600 (lb/mg)

Temperatur 75 Deg. F 23.9 Deg. C 296.9 Deg. K
Pipe ID: 3 in Area 0.0491 ft^2
Uncorrected Measured Velocity Pressure: 1.56 inches of H2O
Elevation: 5030 ft
Density Factor d: 0.79 (from figure 6-14*)
Pipe Dia. Factor: 0.9 (use .9 for pipe dia. < 4 in., use 1 for dia. > 4 in.)

Corrected Velocity: 5065 fpm
Q: 240 CFM 6796 l/min
RT: 24.4 liter atm mole-1

DURATION OF EXTRACTION: 11 hrs.

* Attach Figure 6-14 to spreadsheet for magnehilic gauge calculations

Reference: INDUSTRIAL VENTILATION, From Chapter 41, Heating, Ventilating, Air Conditioning Guide, 1947 MADISON AND ELLIOT (26)

ENGINEERING SCIENCE
1700 Broadway, Suite 900
Denver, CO. 80290

EPA METHOD TO-14 EMISSION CALCULATION SHEET
FOR THE
MAGNEHELIC GAUGE MEASURED IN INCHES OF H20

CLIENT: PSNM	JOB NO. 722445	CHECKED:
SHEET:	BY: JFH	AREA 1
DATE: 34548 9/2/94	REV:	FILE: PNMAREA1.XLS
SUBJECT: INITIAL CARBON LOADING SAMPLE VW1		
COMMENTS: DURATION 11 HRS		

	Chemical Concentration (ppmV)	Molecular Weight (grams/mole)		Chemical Concentration (ppmV)	Molecular Weight (grams/mole)
Freon 12		120.9	Toluene		92.1
Freon 114		170.9	trans-1,3-Dichloropropene		111.0
Chloromethane		50.5	1,1,2-Trichloroethane		133.4
Vinyl Chloride		62.5	Tetrachloroethene	1400	165.8
Bromomethane		95.0	Ethylene Dibromide		187.9
Chloroethane		64.5	Chlorobenzene		112.6
Freon 11		137.4	Ethyl Benzene		106.2
1,1-Dichloroethene	27	96.9	m,p-Xylene		106.2
Freon 113		187.4	o-Xylene		106.2
Methylene Chloride		84.9	Styrene		104.2
1,1-Dichloroethane		99.0	1,1,2,2-Tetrachloroethane		167.9
cis-1,2-Dichloroethene		96.9	1,3,5-Trimethylbenzene		120.2
Chloroform		119.4	1,2,4-Trimethylbenzene	7.3	120.2
1,1,1-Trichloroethane	82	133.4	1,3-Dichlorobenzene		147.0
Carbon Tetrachloride		153.8	1,4-Dichlorobenzene		147.0
Benzene		78.1	Chlorotoluene		126.6
1,2-Dichloroethane		99.0	1,2-Dichlorobenzene		147.0
Trichloroethene		131.4	1,2,4-Trichlorobenzene		181.5
1,2-Dichloropropane		113.0	Hexachlorobutadiene		260.8
cis-1,3-Dichloropropene		111.0			

ENGINEERING SCIENCE
1700 Broadway, Suite 900
Denver, CO. 80290

EPA METHOD TO-14 EMISSION CALCULATION SHEET
FOR THE
MAGNEHELIC GAUGE MEASURED IN INCHES OF H20

CLIENT:	PSNM	JOB NO. 722445	CHECKED:
SHEET:		BY: JFH	AREA 1 2
DATE:	34579 9/2/94	REV:	FILE: PNMAREA2.XLS
SUBJECT:	CARBON LOADING SAMPLE VW2		
COMMENTS:	DURATION 23.5 HRS		

	EMISSION RATE (lb/hr)	EMISSION RATE (lb/day)	EMISSION RATE (lb/yr)	EMISSION RATE (ton/yr)	TOTAL EMISSION (lbs)
Freon 12	0.000	0.000	0	0.0000	0.00
Freon 114	0.000	0.000	0	0.0000	0.00
Chloromethane	0.000	0.000	0	0.0000	0.00
Vinyl Chloride	0.000	0.000	0	0.0000	0.00
Bromomethane	0.000	0.000	0	0.0000	0.00
Chloroethane	0.000	0.000	0	0.0000	0.00
Freon 11	0.000	0.000	0	0.0000	0.00
1,1-Dichloroethene	0.105	2.528	923	0.4613	2.48
Freon 113	0.000	0.000	0	0.0000	0.00
Methylene Chloride	0.000	0.000	0	0.0000	0.00
1,1-Dichloroethane	0.000	0.000	0	0.0000	0.00
cis-1,2-Dichloroethene	0.000	0.000	0	0.0000	0.00
Chloroform	0.000	0.000	0	0.0000	0.00
1,1,1-Trichloroethane	0.205	4.918	1795	0.8975	4.82
Carbon Tetrachloride	0.000	0.000	0	0.0000	0.00
Benzene	0.000	0.000	0	0.0000	0.00
1,2-Dichloroethane	0.000	0.000	0	0.0000	0.00
Trichloroethene	0.000	0.000	0	0.0000	0.00
1,2-Dichloropropane	0.000	0.000	0	0.0000	0.00
cis-1,3-Dichloropropene	0.000	0.000	0	0.0000	0.00
Toluene	0.000	0.000	0	0.0000	0.00
trans-1,3-Dichloropropene	0.000	0.000	0	0.0000	0.00
1,1,2-Trichloroethane	0.000	0.000	0	0.0000	0.00
Tetrachloroethene	5.467	131.217	47894	23.9471	128.48
Ethylene Dibromide	0.000	0.000	0	0.0000	0.00
Chlorobenzene	0.000	0.000	0	0.0000	0.00
Ethyl Benzene	0.000	0.000	0	0.0000	0.00
m,p-Xylene	0.000	0.000	0	0.0000	0.00
o-Xylene	0.000	0.000	0	0.0000	0.00
Styrene	0.000	0.000	0	0.0000	0.00
1,1,2,2-Tetrachloroethane	0.000	0.000	0	0.0000	0.00
1,3,5-Trimethylbenzene	0.000	0.000	0	0.0000	0.00
1,2,4-Trimethylbenzene	0.000	0.000	0	0.0000	0.00
1,3-Dichlorobenzene	0.000	0.000	0	0.0000	0.00
1,4-Dichlorobenzene	0.000	0.000	0	0.0000	0.00
Chlorotoluene	0.000	0.000	0	0.0000	0.00
1,2-Dichlorobenzene	0.000	0.000	0	0.0000	0.00
1,2,4-Trichlorobenzene	0.000	0.000	0	0.0000	0.00
Hexachlorobutadiene	0.000	0.000	0	0.0000	0.00
BTEX	0.000	0.000	0	0.0000	0.00
TOTAL VOCs	5.778	138.66	50612	25.3059	135.77

ENGINEERING SCIENCE
1700 Broadway, Suite 900
Denver, CO. 80290

EPA METHOD TO-14 EMISSION CALCULATION SHEET
FOR THE
MAGNEHELIC GAUGE MEASURED IN INCHES OF H20

CLIENT:		PSNM	JOB NO.	722445	CHECKED:
SHEET:			BY:	JFH	AREA 2
DATE:	34579	9/2/94	REV:		FILE: PNMAREA2.XLS
SUBJECT:		CARBON LOADING SAMPLE VW2			
COMMENTS:		DURATION 23.5 HRS			

EMISSION CALCULATIONS:

ASSUMPTIONS:
R = .0821 liter atm mole-1 K-1

FORMULAS:

Corrected Velocity Pressure (in. H2O) = Uncorrected Velocity Pressure (in. H2O) / Density Factor

Corrected Velocity (fpm) = Corrected Velocity Pressure (in H2O) x Pipe Dia. Factor x [Corrected Velocity Pressure]^1/2
Q (cfm) = Corrected Velocity (fpm) x Pipe Cross Sectional Area (ft^2)

RT (liter atm /mole) = .0821 (liter atm /mole K) x Temperature (K)

TVH (mg/L) = [Chm Conc (ppmV) x Chm MW (g/mole) x 1000 (mg/g) x 1 /10E6 (ppm)] / [RT (liter atm/mole)]
RATE (lb/hr) = TVH (mg/L) x Q (ft^3/min) x 60 (min/hr) x .02832 (m^3/ft^3) x 1000 (L/m^3) x 1 /453600 (lb/mg)

Temperatur 75 Deg. F 23.9 Deg. C 296.9 Deg. K
Pipe ID: 3 in Area 0.0491 ft^2
Uncorrected Measured Velocity Pressure: 1.5 inches of H2O
Elevation: 5030 ft
Density Factor d: 0.79 (from figure 6-14*)
Pipe Dia. Factor: 0.9 (use .9 for pipe dia. × 4 in., use 1 for dia. > 4 in.)

Corrected Velocity: 4967 fpm
Q: 244 CFM 6904 l/min
RT: 24.4 liter atm mole-1

DURATION OF EXTRACTION: 23.5 hrs.

* Attach Figure 6-14 to spreadsheet for magnehilic gauge calculations

Reference: INDUSTRIAL VENTILATION, From Chapter 41, Heating, Ventilating, Air Conditioning Guide, 1947 MADISON AND ELLIOT (26)

ENGINEERING SCIENCE
1700 Broadway, Suite 900
Denver, CO. 80290

EPA METHOD TO-14 EMISSION CALCULATION SHEET
FOR THE
MAGNEHELIC GAUGE MEASURED IN INCHES OF H20

CLIENT:	PSNM	JOB NO.	722445	CHECKED:	
SHEET:		BY:	JFH	AREA 2	
DATE:	34579 9/2/94	REV:		FILE: PNMAREA2.XLS	
SUBJECT:	CARBON LOADING SAMPLE VW2				
COMMENTS:	DURATION 23.5 HRS				

	Chemical Concentration (ppmV)	Molecular Weight (grams/mole)		Chemical Concentration (ppmV)	Molecular Weight (grams/mole)
Freon 12		120.9	Toluene		92.1
Freon 114		170.9	trans-1,3-Dichloropropene		111.0
Chloromethane		50.5	1,1,2-Trichloroethane		133.4
Vinyl Chloride		62.5	Tetrachloroethene	880	165.8
Bromomethane		95.0	Ethylene Dibromide		187.9
Chloroethane		64.5	Chlorobenzene		112.6
Freon 11		137.4	Ethyl Benzene		106.2
1,1-Dichloroethene	29	96.9	m,p-Xylene		106.2
Freon 113		187.4	o-Xylene		106.2
Methylene Chloride		84.9	Styrene		104.2
1,1-Dichloroethane		99.0	1,1,2,2-Tetrachloroethane		167.9
cis-1,2-Dichloroethene		96.9	1,3,5-Trimethylbenzene		120.2
Chloroform		119.4	1,2,4-Trimethylbenzene		120.2
1,1,1-Trichloroethane	41	133.4	1,3-Dichlorobenzene		147.0
Carbon Tetrachloride		153.8	1,4-Dichlorobenzene		147.0
Benzene		78.1	Chlorotoluene		126.6
1,2-Dichloroethane		99.0	1,2-Dichlorobenzene		147.0
Trichloroethene		131.4	1,2,4-Trichlorobenzene		181.5
1,2-Dichloropropane		113.0	Hexachlorobutadiene		260.8
cis-1,3-Dichloropropene		111.0			

ENGINEERING SCIENCE
1700 Broadway, Suite 900
Denver, CO. 80290

EPA METHOD TO-14 EMISSION CALCULATION SHEET
FOR THE
MAGNEHELIC GAUGE MEASURED IN INCHES OF H20

CLIENT:	PSNM	JOB NO. 722445	CHECKED:
SHEET:		BY: JFH	
DATE: 34579 9/2/94		REV:	FILE: PNMTO143.XLS
SUBJECT:	CARBON LOADING SAMPLE VW3		
COMMENTS:	DURATION 8/25 @ 08:30 - 8/25 @ 09:30 DURATION OF 1 HRS		

	EMISSION RATE (lb/hr)	EMISSION RATE (lb/day)	EMISSION RATE (lb/yr)	EMISSION RATE (ton/yr)	TOTAL EMISSION (lbs)
Freon 12	0.000	0.000	0	0.0000	0.00
Freon 114	0.000	0.000	0	0.0000	0.00
Chloromethane	0.000	0.000	0	0.0000	0.00
Vinyl Chloride	0.000	0.000	0	0.0000	0.00
Bromomethane	0.000	0.000	0	0.0000	0.00
Chloroethane	0.000	0.000	0	0.0000	0.00
Freon 11	0.000	0.000	0	0.0000	0.00
1,1-Dichloroethene	0.145	3.487	1273	0.6363	0.15
Freon 113	0.000	0.000	0	0.0000	0.00
Methylene Chloride	0.000	0.000	0	0.0000	0.00
1,1-Dichloroethane	0.000	0.000	0	0.0000	0.00
cis-1,2-Dichloroethene	0.000	0.000	0	0.0000	0.00
Chloroform	0.000	0.000	0	0.0000	0.00
1,1,1-Trichloroethane	0.225	5.398	1970	0.9851	0.22
Carbon Tetrachloride	0.000	0.000	0	0.0000	0.00
Benzene	0.000	0.000	0	0.0000	0.00
1,2-Dichloroethane	0.000	0.000	0	0.0000	0.00
Trichloroethene	0.000	0.000	0	0.0000	0.00
1,2-Dichloropropane	0.000	0.000	0	0.0000	0.00
cis-1,3-Dichloropropene	0.000	0.000	0	0.0000	0.00
Toluene	0.000	0.000	0	0.0000	0.00
trans-1,3-Dichloropropene	0.000	0.000	0	0.0000	0.00
1,1,2-Trichloroethane	0.000	0.000	0	0.0000	0.00
Tetrachloroethene	6.834	164.021	59868	29.9339	6.83
Ethylene Dibromide	0.000	0.000	0	0.0000	0.00
Chlorobenzene	0.000	0.000	0	0.0000	0.00
Ethyl Benzene	0.000	0.000	0	0.0000	0.00
m,p-Xylene	0.000	0.000	0	0.0000	0.00
o-Xylene	0.000	0.000	0	0.0000	0.00
Styrene	0.000	0.000	0	0.0000	0.00
1,1,2,2-Tetrachloroethane	0.000	0.000	0	0.0000	0.00
1,3,5-Trimethylbenzene	0.014	0.324	118	0.0592	0.01
1,2,4-Trimethylbenzene	0.024	0.584	213	0.1065	0.02
1,3-Dichlorobenzene	0.000	0.000	0	0.0000	0.00
1,4-Dichlorobenzene	0.000	0.000	0	0.0000	0.00
Chlorotoluene	0.000	0.000	0	0.0000	0.00
1,2-Dichlorobenzene	0.000	0.000	0	0.0000	0.00
1,2,4-Trichlorobenzene	0.000	0.000	0	0.0000	0.00
Hexachlorobutadiene	0.000	0.000	0	0.0000	0.00
BTEX	0.000	0.000	0	0.0000	0.00
TOTAL VOCs	7.242	173.81	63442	31.7210	7.24

ENGINEERING SCIENCE
1700 Broadway, Suite 900
Denver, CO. 80290

EPA METHOD TO-14 EMISSION CALCULATION SHEET
FOR THE
MAGNEHELIC GAUGE MEASURED IN INCHES OF H20

CLIENT:	PSNM	JOB NO. 722445	CHECKED:
SHEET:		BY: JFH	
DATE: 34579 9/2/94		REV:	FILE: PNMTO143.XLS
SUBJECT:	CARBON LOADING SAMPLE VW3		
COMMENTS:	DURATION 8/25 @ 08:30 - 8/25 @ 09:30 DURATION OF 1 HRS		

	Chemical Concentration (ppmV)	Molecular Weight (grams/mole)		Chemical Concentration (ppmV)	Molecular Weight (grams/mole)
Freon 12		120.9	Toluene		92.1
Freon 114		170.9	trans-1,3-Dichloropropene		111.0
Chloromethane		50.5	1,1,2-Trichloroethane		133.4
Vinyl Chloride		62.5	Tetrachloroethene	1100	165.8
Bromomethane		95.0	Ethylene Dibromide		187.9
Chloroethane		64.5	Chlorobenzene		112.6
Freon 11		137.4	Ethyl Benzene		106.2
1,1-Dichloroethene	40	96.9	m,p-Xylene		106.2
Freon 113		187.4	o-Xylene		106.2
Methylene Chloride		84.9	Styrene		104.2
1,1-Dichloroethane		99.0	1,1,2,2-Tetrachloroethane		167.9
cis-1,2-Dichloroethene		96.9	1,3,5-Trimethylbenzene	3	120.2
Chloroform		119.4	1,2,4-Trimethylbenzene	5.4	120.2
1,1,1-Trichloroethane	45	133.4	1,3-Dichlorobenzene		147.0
Carbon Tetrachloride		153.8	1,4-Dichlorobenzene		147.0
Benzene		78.1	Chlorotoluene		126.6
1,2-Dichloroethane		99.0	1,2-Dichlorobenzene		147.0
Trichloroethene		131.4	1,2,4-Trichlorobenzene		181.5
1,2-Dichloropropane		113.0	Hexachlorobutadiene		260.8
cis-1,3-Dichloropropene		111.0			

ENGINEERING SCIENCE
1700 Broadway, Suite 900
Denver, CO. 80290

EPA METHOD TO-14 EMISSION CALCULATION SHEET
FOR THE
MAGNEHELIC GAUGE MEASURED IN INCHES OF H20

CLIENT:	PSNM	JOB NO. 722445	CHECKED:
SHEET:		BY: JFH	
DATE: 34579 9/2/94		REV:	FILE: PNMTO143.XLS
SUBJECT:	CARBON LOADING SAMPLE VW3		
COMMENTS:	DURATION 8/25 @ 08:30 - 8/25 @ 09:30 DURATION OF 1 HRS		

EMISSION CALCULATIONS:

ASSUMPTIONS:
R = .0821 liter atm mole-1 K-1

FORMULAS:

Corrected Velocity Pressure (in. H2O) = Uncorrected Velocity Pressure (in. H2O) / Density Factor

Corrected Velocity (fpm) = Corrected Velocity Pressure (in H2O) x Pipe Dia. Factor x [Corrected Velocity Pressure]^1/2
Q (cfm) = Corrected Velocity (fpm) x Pipe Cross Sectional Area (ft^2)

RT (liter atm /mole) = .0821 (liter atm /mole K) x Temperature (K)

TVH (mg/L) = [Chm Conc (ppmV) x Chm MW (g/mole) x 1000 (mg/g) x 1 /10E6 (ppm)] / [RT (liter atm/mole)]
RATE (lb/hr) = TVH (mg/L) x Q (ft^3/min) x 60 (min/hr) x .02832 (m^3/ft^3) x 1000 (L/m^3) x 1 /453600 (lb/mg)

Temperature 75 Deg. F 23.9 Deg. C 296.9 Deg. K
Pipe ID: 3 in Area 0.0491 ft^2
Uncorrected Measured Velocity Pressure: 1.5 inches of H2O
Elevation: 5030 ft
Density Factor d: 0.79 (from figure 6-14*)
Pipe Dia. Factor: 0.9 (use .9 for pipe dia. < 4 in., use 1 for dia. > 4 in.)

Corrected Velocity: 4967 fpm
Q: 244 CFM 6904 l/min
RT: 24.4 liter atm mole-1

DURATION OF EXTRACTION: 1 hrs.

* Attach Figure 6-14 to spreadsheet for magnehilic gauge calculations

Reference: INDUSTRIAL VENTILATION, From Chapter 41, Heating, Ventilating, Air Conditioning Guide, 1947 MADISON AND ELLIOT (26)

ENGINEERING SCIENCE
1700 Broadway, Suite 900
Denver, CO. 80290

EPA METHOD TO-14 EMISSION CALCULATION SHEET
FOR THE
MAGNEHELIC GAUGE MEASURED IN INCHES OF H20

CLIENT:	PSNM	JOB NO.	722445	CHECKED:	
SHEET:		BY:	JFH		
DATE:	34579 9/2/94	REV:		FILE: PNMGAC3.XLS	
SUBJECT:	VOC EMISSIONS SAMPLE GAC3				
COMMENTS:	DURATION 8/25 @ 08:30 - 8/25 @ 09:30 DURATION OF 1 HRS				

	EMISSION RATE (lb/hr)	EMISSION RATE (lb/day)	EMISSION RATE (lb/yr)	EMISSION RATE (ton/yr)	TOTAL EMISSION (lbs)
Freon 12	0.000	0.000	0	0.0000	0.00
Freon 114	0.000	0.000	0	0.0000	0.00
Chloromethane	0.000	0.000	0	0.0000	0.00
Vinyl Chloride	0.000	0.000	0	0.0000	0.00
Bromomethane	0.000	0.000	0	0.0000	0.00
Chloroethane	0.000	0.000	0	0.0000	0.00
Freon 11	0.000	0.000	0	0.0000	0.00
1,1-Dichloroethene	0.218	5.230	1909	0.9545	0.22
Freon 113	0.000	0.000	0	0.0000	0.00
Methylene Chloride	0.000	0.000	0	0.0000	0.00
1,1-Dichloroethane	0.000	0.000	0	0.0000	0.00
cis-1,2-Dichloroethene	0.000	0.000	0	0.0000	0.00
Chloroform	0.005	0.129	47	0.0235	0.01
1,1,1-Trichloroethane	0.600	14.394	5254	2.6269	0.60
Carbon Tetrachloride	0.000	0.000	0	0.0000	0.00
Benzene	0.000	0.000	0	0.0000	0.00
1,2-Dichloroethane	0.000	0.000	0	0.0000	0.00
Trichloroethene	0.008	0.189	69	0.0345	0.01
1,2-Dichloropropane	0.000	0.000	0	0.0000	0.00
cis-1,3-Dichloropropene	0.000	0.000	0	0.0000	0.00
Toluene	0.000	0.000	0	0.0000	0.00
trans-1,3-Dichloropropene	0.000	0.000	0	0.0000	0.00
1,1,2-Trichloroethane	0.000	0.000	0	0.0000	0.00
Tetrachloroethene	2.112	50.697	18505	9.2523	2.11
Ethylene Dibromide	0.000	0.000	0	0.0000	0.00
Chlorobenzene	0.000	0.000	0	0.0000	0.00
Ethyl Benzene	0.000	0.000	0	0.0000	0.00
m,p-Xylene	0.000	0.000	0	0.0000	0.00
o-Xylene	0.000	0.000	0	0.0000	0.00
Styrene	0.000	0.000	0	0.0000	0.00
1,1,2,2-Tetrachloroethane	0.000	0.000	0	0.0000	0.00
1,3,5-Trimethylbenzene	0.000	0.000	0	0.0000	0.00
1,2,4-Trimethylbenzene	0.000	0.000	0	0.0000	0.00
1,3-Dichlorobenzene	0.000	0.000	0	0.0000	0.00
1,4-Dichlorobenzene	0.000	0.000	0	0.0000	0.00
Chlorotoluene	0.000	0.000	0	0.0000	0.00
1,2-Dichlorobenzene	0.000	0.000	0	0.0000	0.00
1,2,4-Trichlorobenzene	0.000	0.000	0	0.0000	0.00
Hexachlorobutadiene	0.000	0.000	0	0.0000	0.00
BTEX	0.000	0.000	0	0.0000	0.00
TOTAL VOCs	2.943	70.64	25783	12.8917	2.94

ENGINEERING SCIENCE
1700 Broadway, Suite 900
Denver, CO. 80290

EPA METHOD TO-14 EMISSION CALCULATION SHEET
FOR THE
MAGNEHELIC GAUGE MEASURED IN INCHES OF H20

CLIENT: PSNM	JOB NO. 722445	CHECKED:	
SHEET:	BY: JFH		
DATE: 34579 9/2/94	REV:	FILE: PNMGAC3.XLS	
SUBJECT: VOC EMISSIONS SAMPLE GAC3			
COMMENTS: DURATION 8/25 @ 08:30 - 8/25 @ 09:30 DURATION OF 1 HRS			

	Chemical Concentration (ppmV)	Molecular Weight (grams/mole)		Chemical Concentration (ppmV)	Molecular Weight (grams/mole)
Freon 12		120.9	Toluene		92.1
Freon 114		170.9	trans-1,3-Dichloropropene		111.0
Chloromethane		50.5	1,1,2-Trichloroethane		133.4
Vinyl Chloride		62.5	Tetrachloroethene	340	165.8
Bromomethane		95.0	Ethylene Dibromide		187.9
Chloroethane		64.5	Chlorobenzene		112.6
Freon 11		137.4	Ethyl Benzene		106.2
1,1-Dichloroethene	60	96.9	m,p-Xylene		106.2
Freon 113		187.4	o-Xylene		106.2
Methylene Chloride		84.9	Styrene		104.2
1,1-Dichloroethane		99.0	1,1,2,2-Tetrachloroethane		167.9
cis-1,2-Dichloroethene		96.9	1,3,5-Trimethylbenzene	0	120.2
Chloroform	1.2	119.4	1,2,4-Trimethylbenzene	0	120.2
1,1,1-Trichloroethane	120	133.4	1,3-Dichlorobenzene		147.0
Carbon Tetrachloride		153.8	1,4-Dichlorobenzene		147.0
Benzene		78.1	Chlorotoluene		126.6
1,2-Dichloroethane		99.0	1,2-Dichlorobenzene		147.0
Trichloroethene	1.6	131.4	1,2,4-Trichlorobenzene		181.5
1,2-Dichloropropane		113.0	Hexachlorobutadiene		260.8
cis-1,3-Dichloropropene		111.0			

ENGINEERING SCIENCE
1700 Broadway, Suite 900
Denver, CO. 80290

EPA METHOD TO-14 EMISSION CALCULATION SHEET
FOR THE
MAGNEHELIC GAUGE MEASURED IN INCHES OF H20

CLIENT:	PSNM	JOB NO.	722445	CHECKED:	
SHEET:		BY:	JFH		
DATE:	34579 9/2/94	REV:		FILE: PNMGAC3.XLS	
SUBJECT:	VOC EMISSIONS SAMPLE GAC3				
COMMENTS:	DURATION 8/25 @ 08:30 - 8/25 @ 09:30 DURATION OF 1 HRS				

EMISSION CALCULATIONS:

ASSUMPTIONS:
R = .0821 liter atm mole-1 K-1

FORMULAS:

Corrected Velocity Pressure (in. H2O) = Uncorrected Velocity Pressure (in. H2O) / Density Factor

Corrected Velocity (fpm) = Corrected Velocity Pressure (in H2O) x Pipe Dia. Factor x [Corrected Velocity Pressure]^1/2
Q (cfm) = Corrected Velocity (fpm) x Pipe Cross Sectional Area (ft^2)

RT (liter atm /mole) = .0821 (liter atm /mole K) x Temperature (K)

TVH (mg/L) = [Chm Conc (ppmV) x Chm MW (g/mole) x 1000 (mg/g) x 1 /10E6 (ppm)] / [RT (liter atm/mole)]
RATE (lb/hr) = TVH (mg/L) x Q (ft^3/min) x 60 (min/hr) x .02832 (m^3/ft^3) x 1000 (L/m^3) x 1 /453600 (lb/mg)

Temperatun 75 Deg. F 23.9 Deg. C 296.9 Deg. K
Pipe ID: 3 in Area 0.0491 ft^2
Uncorrected Measured Velocity Pressure: 1.5 inches of H2O
Elevation: 5030 ft
Density Factor d: 0.79 (from figure 6-14*)
Pipe Dia. Factor: 0.9 (use .9 for pipe dia. × 4 in., use 1 for dia. > 4 in.)

Corrected Velocity: 4967 fpm
Q: 244 CFM 6904 l/min
RT: 24.4 liter atm mole-1

DURATION OF EXTRACTION: 1 hrs.

* Attach Figure 6-14 to spreadsheet for magnehilic gauge calculations

Reference: INDUSTRIAL VENTILATION, From Chapter 41, Heating, Ventilating, Air Conditioning Guide, 1947 MADISON AND ELLIOT (26)

VOC vs TIME

TIME	ln TIME	lg (10) time	lb/hr	lb/day
1	0	0	9.1	218
21	3.044522	1.322219	5.8	139
45	3.806662	1.653213	7.2	174

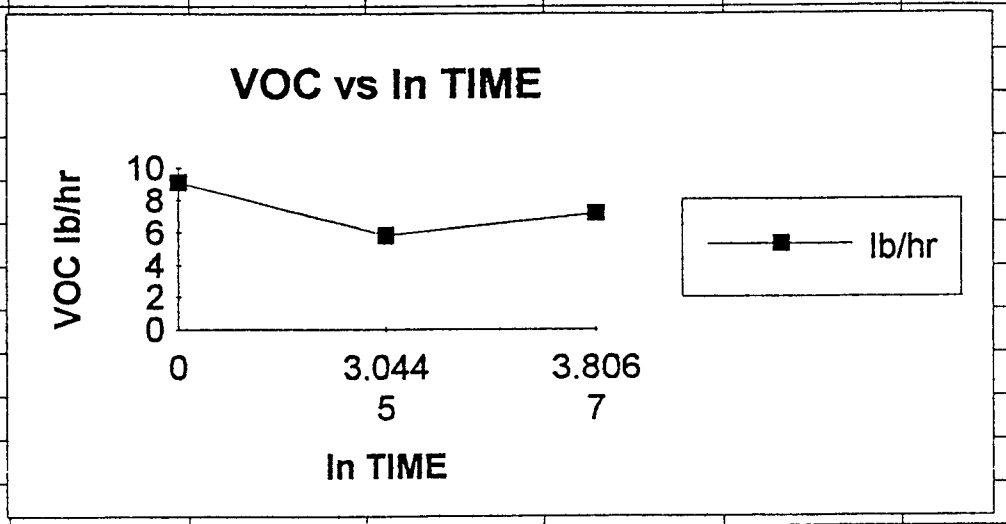

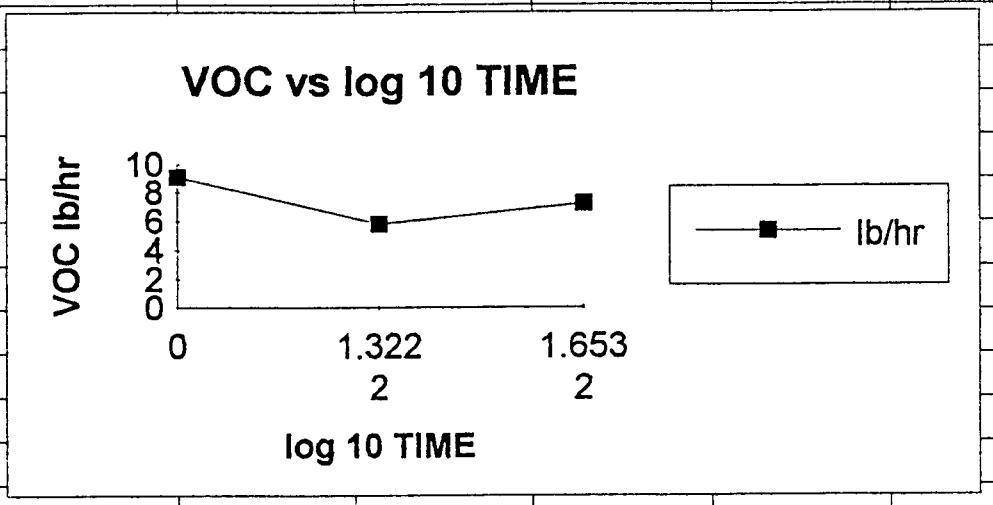

ATTACHMENT 6

CALCULATIONS OF RESIDUAL SOIL CONCENTRATIONS USING EQUILIBRIUM RELATIONSHIP

PARSONS

Calculation Sheet

Rev	By	Date	Ck	Date	Title "Back Check" of Equilibrium Equation Using Pre-SVE Soil Gas/Soil Analytical Data
Ø	LAB	2/97	CBJ	2/97	
					Author L. Benson Sheet 1 Of 4

Purpose: To verify that simple equilibrium equation, proposed to estimate residual average soil concentration in soil beneath RCRA cap at Person Station from measured soil gas data, reasonably approximates conditions observed at site prior to SVE treatment.

Goal: To demonstrate that relationship can be used to conservatively approximate residual soil concentrations from measured soil gas data.

Relationship:

$$C_v = \frac{H\, C_s\, \rho_s}{[\theta_w + K_s \rho_s + H\, \theta_v]}$$

Reference: Standard Guide for Risk-Based Corrective Action Applied at Petroleum Release Sites, E 1739-95, American Society for Testing and Materials (ASTM)

where:

H = Henry's Law Constant $[(g/g\text{-soil})/(g/cm^3\text{-}H_2O)]$

C_s = soil concentration $(g/g\text{-soil})$

ρ_s = soil bulk density $[(g\text{-soil})/(cm^3\text{-soil})]$

θ_w = volumetric content of soil pore water $[cm^3\text{-}H_2O/cm^3\text{-soil}]$

K_s = sorption coefficient $(K_{oc} \times f_{oc})$ $[(g/g\text{-soil})/(g/cm^3\text{-}H_2O)]$

θ_v = volumetric content of soil vapor $[cm^3\text{-vapor}/cm^3\text{-soil}]$

C_v = equilibrium soil vapor concentration $[g/cm^3\text{-vapor}]$

f_{oc} = fraction organic carbon content $(g/g\text{-soil})$

Since the objective is to test whether measured soil gas data can be used to reasonably approximate measured soil data, analytical data for both environmental media collected <u>prior</u> to cap installation/SVE operation will be used (i.e., baseline conditions).

PARSONS

Calculation Sheet

Rev	By	Date	Ck	Date	Title "Back Check" of Equilibrium Equation Using Pre-SVE Soil Gas/Soil Analytical Data
Ø	LAB	2/97	CBL	2/97	
					Author L Benson Sheet 2 Of 4

(b) Parsons ES, 1994, Soil Vapor Concentrations prior to SVE start-up (deep + total) ppbv

	1,1,1-TCA	1,1-DCE	PCE
Max.	120,000	66,000	1,400,000

(c) METRIC/Parsons ES, 1994, soil analytical data – SVE installation

	1,1,1-TCA	1,1-DCE	PCE
Max.			

(d) Geoscience Consultants, Ltd., 1984, Soil analytical data prior to closure cap installation

mg/kg

	1,1,1-TCA	1,1-DCE	PCE	
Max – all	462.2	—	2127.0	
Avg. – all	36.9	—	51.9	
95% UCL*	147.15	—	55.86	(0 to 10' bgs)

* Note: Derivation of 95% UCLs for these data is explained in detail in the 1994b Final Focused Risk Assessment for the Person Generating Station, PNM

Assumed/Measured Site/Chemical Characteristics:

	1,1,1-TCA	1,1-DCE	PCE	Source
H	0.705	1.07	0.754	USEPA, 1996
ρ_s	1.6	1.6	1.6	Geoscience, 1984
θ_w	0.074	0.074	0.074	Geoscience, 1984
K_s	135	65	265	USEPA, 1996
θ_v	0.23	0.23	0.23	Parsons ES, 1994a
f_{oc}	0.0027	0.0027	0.0027	Parsons ES, 1994a

PARSONS

Calculation Sheet

Rev	By	Date	Ck	Date	Title "Back Check" of Equilibrium Equation Using Pre-SVE Soil Gas/Soil Analytical Data
Ø	LAB	7/97	CBB	2/97	
					Author L. Benson Sheet 3 Of 4

1994 Soil Gas Data → Predicted Soil Concentrations

Indicator Compound PCE (Total Mass %, "Risk Driver")

$$C_s = \frac{C_v[\theta_w + K_s \rho_s + H\theta_v]}{H \rho_s}$$

$$PCE\left(\frac{g}{g}\right) = \frac{(1.4E6\ ppb)\left(\frac{6.89}{1E12}\right)^{a/}\left[0.074 + (0.7155)(1.6) + (0.754)(0.23)\right]}{(0.754)(1.6)}$$

Conversion for

a/ $ppbv_{PCE} \Rightarrow (ppb)\left(\frac{1\ ppm}{1000\ ppb}\right)\left(\frac{6.89\ \frac{mg}{m^3}}{1\ ppm}\right)\left(\frac{g}{1000\ mg}\right)\left(\frac{m}{100\ cm}\right)^3 = \frac{6.89}{1E12}$ (chemical-specific (NIOSH, 1990))

to

$\frac{g}{cm^3}_{PCE}$

$PCE\left(\frac{g}{g}\right) = 1.11E-5$ or $PCE\left(\frac{mg}{kg}\right) = \underline{11.13}$

$$\left(\frac{g}{g}\right)\left(\frac{1000\ mg}{g}\right)\left(\frac{1000\ g}{kg}\right) = \frac{mg}{kg}$$

Estimated	1994 Avg.	1994 Max	1984 Avg	1984 95% UCL	1984 Max.
11.13 $\frac{mg}{kg}$	152.2 $\frac{mg}{kg}$	880 $\frac{mg}{kg}$	51.9 $\frac{mg}{kg}$	55.9 $\frac{mg}{kg}$ (shallow soils only)	2,127 $\frac{mg}{kg}$

∴ Estimated residual soil concentration for indicator compound PCE using Pre-SVE soil gas data corresponds well to the 1984 average (and 95% UCL) soil concentrations. The 1984 data were collected throughout the soil source area; the 1994 data were collected in the center during VEW/DW installation. The soil gas data reflects the contaminant mass removed from 110+ feet-long soil column, with a radius of influence greater than 55 feet.

PARSONS

Calculation Sheet

Rev	By	Date	Ck	Date	Title "Back Check" of Equilibrium Equation Using Pre-SVE Soil Gas/Soil Analytical Data
Ø	LAB	3/97			
					Author L. Binson Sheet 4 Of 4

References:

Geoscience Consultants, Ltd. 1984. Final Soil Contamination Assessment and Preliminary Ground Water Contamination Assessment, PNM Person Generating Station

Parsons ES. 1994a. Test Plan for Evaluation of the Soil Vapor Extraction System at Person Generating Station, Public Service Company of New Mexico.

Parsons ES. 1994b. Final Focused Risk Assessment for the Person Generating Station, Public Service Company of New Mexico.

ASTM. 1995. Standard Guide for Risk-Based Corrective Action Applied at Petroleum Release Sites (E1739-95).

US Environmental Protection Agency. 1996. Soil Screening Guidance: Technical Background Document. EPA/540/R-95/128 (May).

NIOSH. 1990. Pocket Guide to Chemical Hazards. DHHS Publication No. 90-117.

PARSONS

Calculation Sheet

Rev	By	Date	Ck	Date	Title
0	LAB	2/97	CBB	2/97	Estimated Soil Gas Levels Corresponding to Most Stringent Soil Cleanup Goals
					Author L. Benson — Sheet 1 Of 2

Purpose: To estimate the soil gas concentrations corresponding to most stringent proposed soil cleanup levels (e.g., USEPA groundwater-protective soil screening levels [SSLs])

Goal: To confirm no measured soil gas concentrations exceed estimated target cleanup levels/indicators.

Relationship:

$$C_v = \frac{H C_s \rho_s}{[\theta_w + K_s \rho_s + H \theta_v]}$$

Reference: ASTM, 1995

where:

H = Henry's Law Constant $[(g/g\text{-soil})/(g/cm^3\text{-}H_2O)]$

C_s = soil concentration $(g/g\text{-soil})$

ρ_s = soil bulk density $[(g\text{-soil})/(cm^3\text{-soil})]$

θ_w = volumetric content of soil pore water $(cm^3\text{-}H_2O/cm^3\text{-soil})$

K_s = sorption coefficient $(K_{oc} \times f_{oc})$ $[(g/g\text{-soil})/(g/cm^3\text{-}H_2O)]$

θ_v = volumetric content of soil vapor $[cm^3\text{-vapor}/cm^3\text{-soil}]$

C_v = equilibrium soil vapor concentration $(g/cm^3\text{-vapor})$

f_{oc} = fraction organic carbon content $(g/g\text{-soil})$

Target Soil Levels (USEPA, 1996)

1,1,1-TCA (ug/kg)	= 2000	Groundwater protective w/ DAF = 20 (depth to GW = 110' most contam. previously existed above 70' bgs)
1,1-DCE (ug/kg)	= 60	
PCE (ug/kg)	= 60	

PARSONS

Calculation Sheet

Rev	By	Date	Ck	Date	Title Estimated Soil Gas Levels Corresponding to Most Stringent Soil Cleanup Goals
Ø	LAB	2/97			
					Author L. Benson — Sheet 2 Of 2

Assumed / Measured Site/Chemical Characteristics:

	1,1,1-TCA	1,1-DCE	PCE	Source
H	0.705	1.07	0.754	USEPA, 1996
ρ_s	1.6	1.6	1.6	Geoscience, 1984
θ_w	0.074	0.074	0.074	Geoscience, 1984
K_s	135	65	265	USEPA, 1996
θ_v	0.23	0.23	0.23	Parsons, 1994
foc	0.0027	0.0027	0.0027	Parsons, 1994

Example Calculation:

$$PCE\left(\frac{g}{cm^3}\right) = \frac{(0.754)(60\ \frac{ug}{Kg})(\frac{1}{1E9})^{a/}(1.6)}{[0.074 + (0.7155)(1.6) + (0.754)(0.23)]}$$

a/ $\frac{ug}{Kg} \Rightarrow \frac{g}{g}$ ∴ $\left(\frac{ug}{Kg}\right)\left(\frac{mg}{1000\,ug}\right)\left(\frac{g}{1000\,mg}\right)\left(\frac{1\,Kg}{1000\,g}\right) = \frac{1}{1E9}$

↑ units of C_s

$PCE\left(\frac{g}{cm^3}\right) = 5.2E-8$ or $PCE(ppbv) = 7{,}546$

↑ $\left(\frac{g}{cm^3}\right)\left(\frac{100\,cm}{m}\right)^3\left(\frac{1000\,mg}{g}\right)\left(\frac{1\,ppm}{6.89\,mg/m^3}\right)\left(\frac{1000\,ppb}{1\,ppm}\right) = ppbv$

∴ Would need to measure at least 16.1 ppbv PCE in soil gas to suggest residual soil PCE concentrations exceed most stringent USEPA SSLs appropriate for site.

PARSONS

Calculation Sheet

Rev	By	Date	Ck	Date	Title
Ø	LAB	2/97	CRD	2/97	Calculation Residual Soil Concentrations Using Sept 1996 Soil Gas Data
					Author L. Benson — Sheet 1 Of 1

Purpose: To estimate the residual soil concentrations from most recent soil gas analytical data

Relationship:

$$C_v = \frac{H\, C_s\, \rho_s}{[\theta_w + K_s \rho_s + H\, \theta_v]}$$

where all elements are as described and defined previously.

Sept 96 ⇒ PCE = 3.3 $\frac{mg}{m^3}$ = 3.3E-9 g/cm³ TCA = 0.42 $\frac{mg}{m^3}$ = 4.2E-10 g/cm³ DCE = 1.3 $\frac{mg}{m^3}$ = 1.3E-9 g/cm³

PCE ⇒ $$\frac{(3.3E-9)[0.074 + (0.7155)(1.6) + (0.754)(0.23)]}{(0.754)(1.6)}$$

⇒ 3.81E-9 $\frac{g}{g}$ or 3.81E-3 $\frac{mg}{kg}$

TCA ⇒ $$\frac{(4.2E-10)[0.074 + (0.364)(1.6) + (0.705)(0.23)]}{(0.705)(1.6)}$$

⇒ 3.05-10 $\frac{g}{g}$ or 3.05E-4 $\frac{mg}{kg}$

DCE ⇒ $$\frac{(1.3E-9)[0.074 + (0.1755)(1.6) + (1.07)(0.23)]}{(1.07)(1.6)}$$

⇒ 4.56E-10 $\frac{g}{g}$ or 4.56E-4 $\frac{mg}{kg}$