*Public Service Company*
*of New Mexico*
*Alvarado Square MS. 0408*
*Albuquerque, NM 87158*

October 28, 1996

Certified Mail,
Return Receipt Requested

Mr. Benito Garcia
New Mexico Environment Department
Hazardous and Radioactive Materials Bureau
P.O. Box 26110
Santa Fe, NM 87502

Dear Mr. Garcia:

Subject: Post Corrective Measures Implementation Report, Phase II, Person Generating Station, NMT360010342

Enclosed please find two copies of the report Post Corrective Measures Implementation Report, Phase II, Person Generating Station, Albuquerque, NM, NMT360010342 prepared pursuant to requirements in the Person Station Corrective Action Directive issued September 1991.

If you have any questions, please contact me at (505) 241-2998.

Sincerely,

Ron Johnson

Ron D. Johnson
Technical Group Leader

enclosure
cc: Carl Will - NMED HRMB

# Post Corrective Measures Implementation Report
# Phase II
# Person Generating Station
# Albuquerque, New Mexico

***RCRA Permit: NMT 360010342***

***Prepared for***

**Public Service Company of New Mexico**

***October 1996***

PARSONS
PARSONS ENGINEERING SCIENCE, INC.
1700 Broadway, Suite 900 • Denver, Colorado 80290

# TABLE OF CONTENTS



## LIST OF TABLES

# 1.0 INTRODUCTION

As required by the Corrective Action Directive (CAD), Public Service Company of New Mexico (PNM) has prepared this Post-Corrective Measures Implementation Report to briefly describe the major elements of the Phase II groundwater extraction and treatment system, including an updated assessment of its continuing efficiency, for the Person Generating Station. This report presents a narrative description of the major additions and/or improvements made to the groundwater extraction and treatment system as part of Phase II corrective action measures at the site. As-built diagrams and photographic documentation of the Phase II groundwater extraction and treatment devices and a map (at a scale of 1 inch equals 200 feet) of the full-scale system are included in Appendix A. Recent sampling data relevant to assessing the continuing effectiveness of the implemented "through-put" remediation approach are included in Appendix B. The complete operations and maintenance (O&M) manual for the Phase II system (Parsons ES, 1996) is included as Appendix C.

## 1.1 Site Background

A summary of pertinent site background information was compiled from the Corrective Measures Proposal (CMP) for the Person Generating Station (ES, 1994), and from subsequent documentation on remedial system operations prepared in response to the CAD and/or the Resource Conservation and Recovery Act (RCRA) Post-Closure Care Permit requirements. This information is provided only to support a description of the Phase II groundwater extraction and treatment system.

### 1.1.1 Operational History

The Person Generating Station site was operated and maintained by PNM from 1952 through 1986. The Person Generating Station site included a maintenance area to support, among other activities, equipment cleaning efforts. The parts wash area included a sump and a below-grade, vertically installed, open-bottomed, 3.5' x 10' cylindrical waste oil storage vessel located on the north side of the site to collect wastes generated during equipment cleaning. Waste oils and greases, kerosene, a water-

trisodium phosphate mixture used in steam cleaning, Stoddard® solvent, Dowclene EC®, and other solvent mixtures generated during maintenance activities were piped to the vessel for storage (METRIC, 1993).

The vessel was apparently in use from about July 1976 until October 13, 1983, when it was discovered that the bottom of the vessel was open (i.e., the vessel bottom consisted of the underlying soil). Upon making this discovery on October 13, 1983, PNM immediately emptied the vessel and removed it from service. PNM arranged for the most grossly contaminated source material to be removed from the bottom of the vessel and placed in 55-gallon steel drums in 1983; this drummed material was ultimately transported offsite for disposal as hazardous waste in 1987 (ES, 1994). Following removal of the vessel from service, PNM installed a RCRA closure cap on the 25' x 35' source area to minimize precipitation infiltration.

### 1.1.2 Implemented Corrective Action Program

Based on the results of initial assessment activities completed at the site to delineate the nature and extent of environmental contamination resulting from use of the below-grade vessel, the New Mexico Environment Department (NMED) directed PNM to select and implement one or more corrective action technologies to contain, remove, or treat the hazardous waste constituents escaping from the permitted unit. Groundwater extraction and onsite treatment was selected as the treatment technology for shallow groundwater. This technology was selected to prevent the further migration of a shallow dissolved plume of volatile organic compounds (VOCs). The VOCs of interest include tetrachloroethene (PCE), 1,1-dichloroethene (1,1-DCE), and 1,1,1-trichloroethane (1,1,1-TCA). The technical basis for and conceptual design of the recommended remedial approach for shallow groundwater was presented in the Corrective Measures Proposal (CMP), which was submitted to NMED in January 1994 in partial response to the CAD.

The CMP proposed a two-phase approach to implementing the selected corrective measures at the site: Phase I pilot testing and system optimization, followed by Phase II

full-scale system design, installation, and operation. As of August 26, 1996, PNM is operating the full-scale Phase II groundwater extraction and treatment system for shallow groundwater contamination. As required by the CAD, this report summarizes the full-scale Phase II system design and operating information for the shallow groundwater extraction and treatment system.

## 2.0 PHASE II GROUNDWATER EXTRACTION AND TREATMENT

The objective of the groundwater extraction and treatment system at the Person Generating Station is to:

- Capture shallow groundwater contaminated with VOCs;
- Deliver the captured groundwater to an onsite treatment plant;
- Treat the delivered groundwater to NMED's specified cleanup goals through use of air stripping followed by granulated activated carbon (GAC) polishing; and
- Discharge treated groundwater to the University of New Mexico (UNM) Championship Golf Course pond.

Two recovery/extraction wells and a single treatment train involving air stripping with GAC polishing [in the event that less than the desired air stripping efficiency was realized] were used to capture and treat VOC-contaminated groundwater during Phase I operations. Data collected during Phase I operations such as the sustained pumping rates, the capture zone of each recovery/extraction well, contaminant concentrations, and air stripper and carbon unit performance were evaluated and incorporated into the Phase II full-scale remedial design. Additionally, any operating problems that surfaced during Phase I were addressed before the Phase II system design was finalized.

The Phase II system includes four additional recovery/extraction wells (to supplement those wells used in Phase I), modifications to Phase I flow and pH controls, and a second (parallel) treatment train. The following narrative summarizes these

elements of the Phase II system. As-built diagrams of the full system are presented in Appendix A.

## 2.1 Recovery/Extraction Wells

The recovery/extraction wells in the Phase II system were located to ensure containment and capture of the dissolved shallow plume. A total of four additional groundwater recovery/extraction wells were added to the Phase I treatment process as part of Phase II corrective action activities. These included the installation of one new extraction well (EW-1) located between the VEW/DW well and PSMW-16, and the conversion of monitoring wells PSMW-24, PSMW-25, and PSMW-26 to recovery/extraction wells. The locations of the Phase II extraction wells in relation to the Person Generating Station are shown in Appendix A (Phase II site map). The Phase II wells are anticipated to provide sufficient drawdown at the boundary of the shallow plume of contamination. Drawdown will create a gradient toward the extraction wells, ensuring that the plume will not migrate beyond its current boundaries, and that contaminated groundwater will be collected for treatment.

A submersible well pump is installed at each groundwater recovery/extraction well. Equipment specifications and operating details for each recovery/extraction well are provided in Appendix C, as part of the O&M manual. The groundwater flow have been set for each of the six Phase II recovery/extraction wells as follows:

1) VEW/DW, 4 gallons per minute (gpm);

2) PSMW-16, 10 gpm;

3) EW-1, 4 gpm;

4) PSMW-24, 7 gpm;

5) PSMW-25, 1.5 gpm; and

6) PSMW-26, 3.5 gpm.

Consequently, the operating flow of the Phase II system is 30 gpm. All groundwater recovered by the wells is pumped into an equalization tank, which is designed to evenly split flow to each of the parallel treatment trains, if necessary. The equalization tank has a capacity of 67 gallons.

## 2.2 Flow Control

Flow control was incorporated into the Phase II design as an operational control to minimize the on and off cycling of the treatment plant transfer pumps. These flow controls effectively "level" the operation of the transfer pumps based upon the water levels in the respective surge systems (i.e., the air stripper sumps and the surge tank), thereby reducing the on/off cycling of the respective pumps. This allows for more efficient functioning of the system. The flow control valving in the treatment train is shown in as-built diagrams and photographic documentation in Appendix A.

## 2.3 pH Control

The incorporation of pH control into the Phase II system is a result of the operational problems encountered during Phase I. Due to the carbonate chemistry of the contaminated groundwater, pH elevation within the air strippers (due to the off-gassing of carbon dioxide) caused a resultant precipitation of calcium carbonate scaling within the GAC unit during extended Phase I operations. The precipitation of calcium carbonate effectively fouled (plugged) the upper portions of the GAC unit, thereby increasing the pressures above the pressure rating for the GAC unit. Although the carbonate precipitation problem occurred primarily in the GAC unit, some precipitation was also occurring in the air stripper.

Scale formation can be prevented by acid addition whereby supersaturation of the water, with respect to alkalinity and/or calcium concentration, is achieved. The control of pH related scaling (pH lowering) was incorporated into the Phase II system design by the addition of concentrated sulfuric acid. Bulk storage of sulfuric includes a "tote" provided by chemical suppliers, as documented in Appendix A (Photograph 1), which is located immediately outside the southwest corner of the groundwater treatment plant. The tote will provide approximately seven months of acid supply. Metering pumps are located within 10 feet of the tote and are equipped with calibration tubes on the suction side of the pumps to allow calibration of the pumps.

The pH of the air stripper effluent is maintained within the range of 6.3 to 6.8 standard units. Maintaining this pH ensures that the water chemistry of the treated groundwater is such that the precipitation of insolubles (at moderate pH) is minimized (if not eliminated), thereby increasing the operational life of the GAC unit.

## 2.4 Phase II Parallel Treatment Train

The Phase I system was expanded in anticipation for Phase II operations to include an additional treatment train (e.g., air stripper, bag filters, and GAC unit) in parallel to the existing treatment train within the groundwater treatment plant. The following presents the "through-put" treatment approach for the Phase II system, including an evaluation its effectiveness. However, this report is not intended to replace or otherwise supersede the performance evaluations conducted pursuant to Phase II, Item 7 of the CAD.

### 2.4.1 Air Stripper

Air stripping exploits the volatility and insolubility of VOCs in water to transfer (remove) VOCs from water into an air stream that can be safely discharged to the atmosphere. The air stripper is the first treatment operation in the Phase II system. The air stripper is an Ejector Systems Cascade LP5002, factory-equipped with: blower and blower motor; transfer pump and pump motor; two trays; high/low level switch; high and low air pressure switches; and line sampling ports. The additional air stripper has effectively doubled the maximum flow capacity of the plant from 50 to 100 gpm. Contaminated groundwater flows by gravity from the equalization tank into the top of the air stripper and cascades downward through baffled trays to the stripper sump. The stripper blower forces air upward through aeration tubes in the stripper trays, and "countercurrent" to the flow of the water. VOCs are vaporized out of the water into the air flow.

Air stripper liquid effluent is collected in the air stripper's built-in sump, and then pumped to the bag filter and GAC unit (described below). The built-in sump is cast within the curbed area surrounding the air stripper, and is covered with a steel grate.

A high-level switch in the sump is tied into the system shutdown. System shutdown (Appendix C) will be activated by a high-level switch within the sump if the water entering the sump exceeds the discharge capacity of the sump pump.

Air stripper offgas is discharged to the atmosphere outside of the treatment building. Appendix A includes a complete groundwater treatment plant P&ID for the Phase II configuration; Appendix C presents the supplemental O&M manual for the air stripper.

Based on the set pumping rates, the flow of the Phase II treatment system is 30 gpm. Table 2.1 compares analytical water data collected at the upstream sampling port (i.e., between the equalization tank and the air stripper) and the downstream sampling port (i.e., upstream of the GAC unit). Phase II air stripper performance is similar to the level of treatment achieved during Phase I, indicating that the Phase II system can effectively treat contaminated groundwater captured from all six of the recovery/extraction wells.

### 2.4.2 Bag Filters

Bag filters are used to remove suspended solids from the treated liquid effluent after it leaves the air stripper. Suspended solids must be removed to ensure optimum treatment efficiency of the GAC unit, which is downstream from the bag filters. Two bag filters are installed in each of the treatment trains in a parallel configuration. Parallel installation and operation minimizes the pressure drop due to filtration, and the frequency of bag changes. However, the treatment train can only operate with one bag filter online (i.e., the treated groundwater is not routed through two bag filters in parallel). Details on equipment specifications and operation and maintenance requirements are included in Appendix C.

### 2.4.3 GAC Units

A GAC unit is installed immediately downstream from the bag filters of each treatment train. The GAC units are included to adsorb any VOCs not removed from the groundwater in the air stripper. As discussed earlier, pH controls were included in

## TABLE 2.1
## AIR STRIPPER ANALYTICAL DATA

### PERSON GENERATING STATION
### BERNALILLO COUNTY, NEW MEXICO

| VOC COMPOUND | GTS-INFLUENT (µg/L) | GTS-AIR STRIPPER EFFLUENT (µg/L) | EFFICIENCY (%) |
|---|---|---|---|
| **PHASE I** | | | |
| **FEBRUARY 1995**[a/] | | | |
| Tetrachloroethene - High | 170 | <0.5 | > 99.7 |
| Tetrachloroethene - Low | 54 | <0.5 | > 99.1 |
| 1,1-Dichloroethene - High | 74 | <0.5 | > 99.4 |
| 1,1-Dichloroethene - Low | 24 | <0.5 | > 98.0 |
| 1;1,1-Trichloroethane - High | 5.5 | <0.5 | > 91.0 |
| 1,1,1-Trichloroethane - Low | 2.2 | <0.5 | 100* |
| **NOVEMBER 1995** | | | |
| Bromoform | 0.6 | <0.5 | 100* |
| 1,1 Dichloroethene | 17 | <0.2 | > 98.8 |
| Tetrachloroethene | 39 | <0.5 | > 98.7 |
| 1,1,1 Trichloroethane | 1.9 | <1.0 | 100* |
| **PHASE II** | | | |
| **AUGUST 1996** | | | |
| Bromodichloromethane | 0.2 | <0.2 | 100* |
| Chloroform | 2.1 | <0.5 | 100* |
| 1,2-Dibromoethane | 0.6 | <0.2 | 100* |
| 1,1-Dichloroethane | 0.9 | <0.3 | 100* |
| 1,1-Dichloroethene | 19 | <0.2 | > 98.9 |
| Tetrachloroethene | 36 | <0.5 | > 98.6 |
| 1,1,1-Trichloroethane | 2.1 | <1.0 | 100* |
| Trichloroethene | 0.3 | <0.3 | 100* |
| **SEPTEMBER 1996** | | | |
| Chloroform | 1.0 | <0.5 | 100* |
| 1,1-Dichloroethane | 1.0 | <0.3 | 100* |
| 1,1-Dichloroethene | 17 | <0.2 | > 98.8 |
| Tetrachloroethene | 40 | <0.5 | > 98.7 |
| 1,1,1 Trichloroethane | 2.6 | <1.0 | 100* |

[a/] In February 1995, the air stripper efficiencies were calculated for both the high and low influent VOC concentrations encountered. "<" Indicates a value below reporting limit of analysis. ">" Indicates a conservative value based on detection limits. Actual efficiencies may be higher. "*" Indicates influent concentrations were extremely low and further reduced to below detection limits. Air stripper removal of low concentrations of contaminants to below detection indicates a high degree of efficiency that cannot be quantified.

the Phase II system to prevent scaling of the GAC unit(s). The GAC units are Model ASC-1200, supplied by Westates Corporation (Appendix C). Similar to the air stripper, water samples can be collected both upstream and downstream of the GAC unit(s) to evaluate breakthrough and final treated effluent water quality. Table 2.2 compares water quality data collected upstream and downstream of the GAC unit during recent Phase II operations. As expected, most VOC mass is effectively removed from the liquid effluent by air stripping. However, in those rare instances when GAC polishing is necessary, available analytical data demonstrate that the GAC unit effectively reduces VOC mass well below NMED's prescribed discharge standards (see also Appendix C).

### 2.4.4 Discharge of Treated Liquid Effluent

All treated groundwater from the GAC unit flows to the surge tank, which has a capacity of 500 gallons. A pump and piping system transfers treated groundwater from the surge tank to the primary discharge at UNM's Championship Golf Course pond. An auxiliary discharge valve enables PNM to release treated groundwater from the surge tank to a concrete holding pond.

## 2.5 Discharge Permit Modification

As a result of the acid addition to the treatment train, an addendum to the discharge approval permit received in January 1995 was required. Approval of the proposed addendum or modification to the approved discharge plan of treated groundwater to the UNM's Championship Golf Course was received March 25, 1996 from NMED (included as part of O&M manual, Appendix C). In approving the discharge plan amendment, NMED has determined that the requirements of the WQCC (Reg. 3109) for the treated groundwater have been met by the Phase II system.

# TABLE 2.2
# GAC ANALYTICAL DATA

## PERSON GENERATING STATION
## BERNALILLO COUNTY, NEW MEXICO

| VOC COMPOUND | GTS-AIR STRIPPER EFFLUENT (µg/L) | GAC EFFLUENT (µg/L) | EFFICIENCY (%) |
|---|---|---|---|
| **PHASE I** | | | |
| **FEBRUARY 1995[a/]** | | | |
| Tetrachloroethene - High | <0.5 | <0.5 | 100* |
| Tetrachloroethene - Low | <0.5 | <0.5 | 100* |
| 1,1 Dichloroethene - High | <0.5 | <0.5 | 100* |
| 1,1 Dichloroethene - Low | <0.5 | <0.5 | 100* |
| 1,1,1 Trichloroethane - High | <0.5 | <0.5 | 100* |
| 1,1,1 Trichloroethane - Low | <0.5 | <0.5 | 100* |
| **NOVEMBER 1995** | | | |
| Bromoform | <0.5 | <0.5 | 100* |
| 1,1 Dichloroethene | <0.2 | <0.2 | 100* |
| Tetrachloroethene | <0.5 | <0.5 | 100* |
| 1,1,1 Trichloroethane | <1.0 | <1.0 | 100* |
| **PHASE II** | | | |
| **AUGUST 1996** | | | |
| Bromodichloromethane | <0.2 | <0.2 | 100* |
| Chloroform | <0.5 | <0.5 | 100* |
| 1,2 Dibromoethane | <0.2 | <0.2 | 100* |
| 1,1 Dichloroethane | <0.3 | <0.3 | 100* |
| 1,1 Dichloroethene | <0.2 | <0.2 | 100* |
| Tetrachloroethene | <0.5 | <0.5 | 100* |
| 1,1,1 Trichloroethane | <1.0 | <1.0 | 100* |
| Trichloroethene | <0.3 | <0.3 | 100* |
| **SEPTEMBER 1996** | | | |
| Chloroform | <0.5 | <1.0 | 100* |
| 1,1-Dichloroethane | <0.3 | <0.3 | 100* |
| 1,1-Dichloroethene | <0.2 | <0.2 | 100* |
| Tetrachloroethene | <0.5 | <0.5 | 100* |
| 1,1,1 Trichloroethane | <1.0 | <1.0 | 100* |

[a/] In February 1995 the GAC efficiencies were calculated for both the high and low influent VOC concentrations encountered. "<" Indicates a value below reporting limit of analysis. ">" Indicates a conservative value based on detection limits. "*" Indicates influent concentrations were at or below detection levels and further reduced to below detection limits. GAC removal of contaminants to below detection indicates a high degree of efficiency that cannot be quantifiable.

## 3.0 REFERENCES

Engineering-Science, Inc. (ES). 1994. *Corrective Measures Proposal for the Person Generating Station*, Public Service Company of New Mexico, NMT360010342. Prepared for the Public Service Company of New Mexico, Albuquerque, New Mexico. January.

METRIC Corporation. 1993. *Corrective Action Directive Assessment Summary Report*, Person Generating Station, NMT360010342. Prepared for the Public Service Company of New Mexico, Albuquerque, New Mexico.

# APPENDIX A

# AS-BUILTS, PHOTOGRAPHIC DOCUMENTATION, AND SITE MAP (1' = 200' SCALE)

## APPENDIX A
## SURVEY DATA FOR GROUNDWATER EXTRACTION WELLS
### PERSON GENERATING STATION

| Recovery/Extraction Well | North NM Coordinate | East NM Coordinate |
|---|---|---|
| VEW/DW | 1465684.25 | 382351.75 |
| EW-1 | 1465605.27 | 382714.18 |
| PSMW-16 | 1465500.26 | 383481.43 |
| PSMW-24 | 1465389.86 | 384191.36 |
| PSMW-25 | 1465780.13 | 384243.49 |
| PSMW-26 | 1465007.19 | 384219.41 |

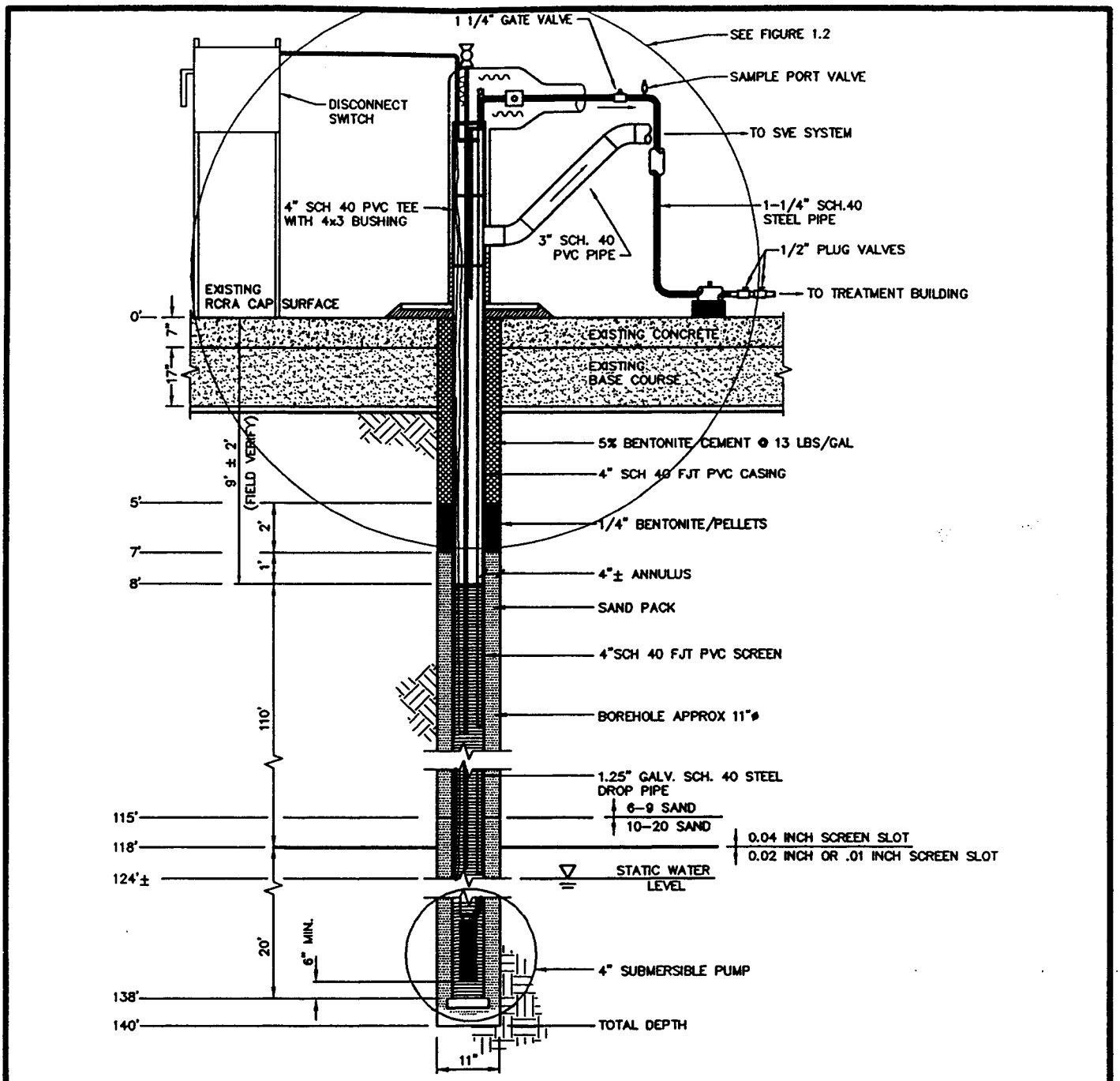


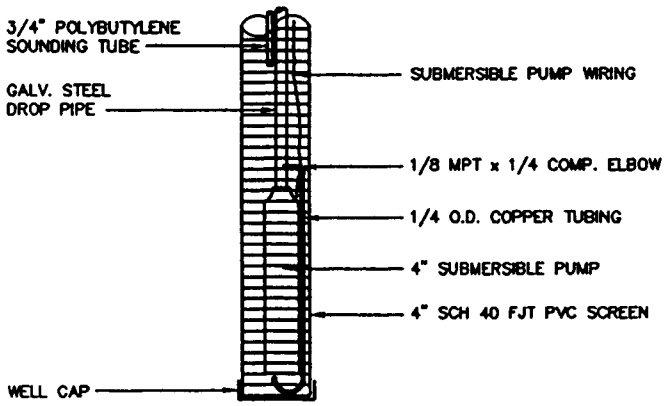


4" SUBMERSIBLE PUMP DETAIL

# VAPOR EXTRACTION/ DEWATERING WELL (VEW/DW) DETAIL

Public Service Company of New Mexico
Person Generating Station
Albuquerque, New Mexico

PARSONS ENGINEERING SCIENCE, INC.
Denver, Colorado

K:\PNM\95DN0671, 04/11/95 at 10:38

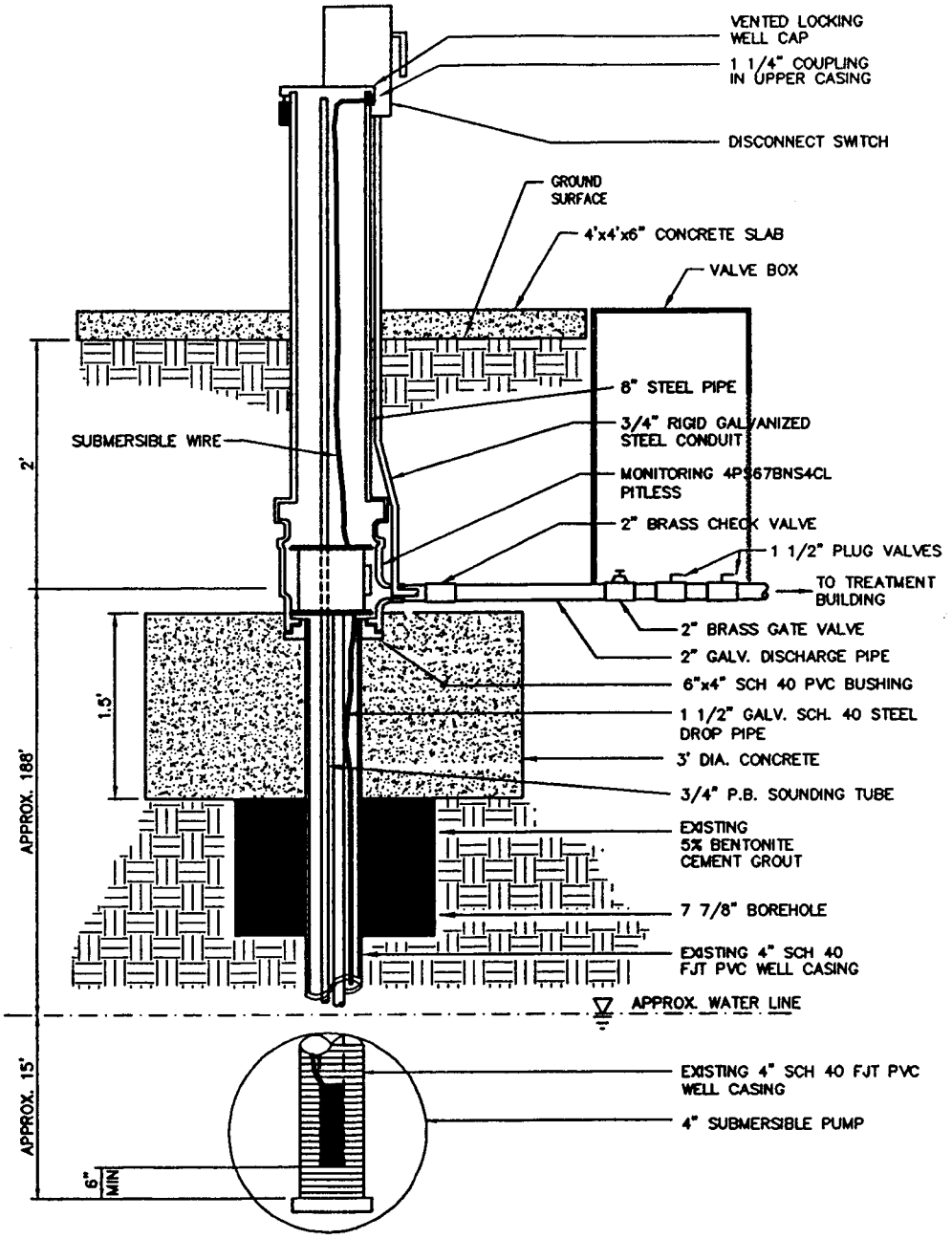


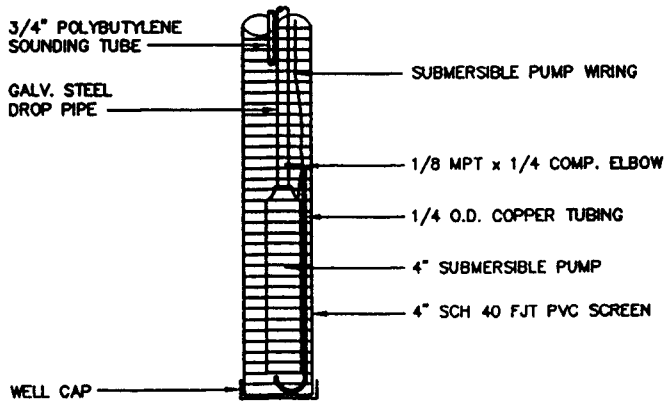


4" SUBMERSIBLE PUMP DETAIL

**PUMP & TREAT**
**WELL HEAD DETAIL**
**(PSMW-16)**

Public Service Company of New Mexico
Person Generating Station
Albuqueque, New Mexico

**PARSONS ENGINEERING SCIENCE, INC.**
Denver, Colorado

K:\PNM\95DN0671, 04/11/95 at 10:42

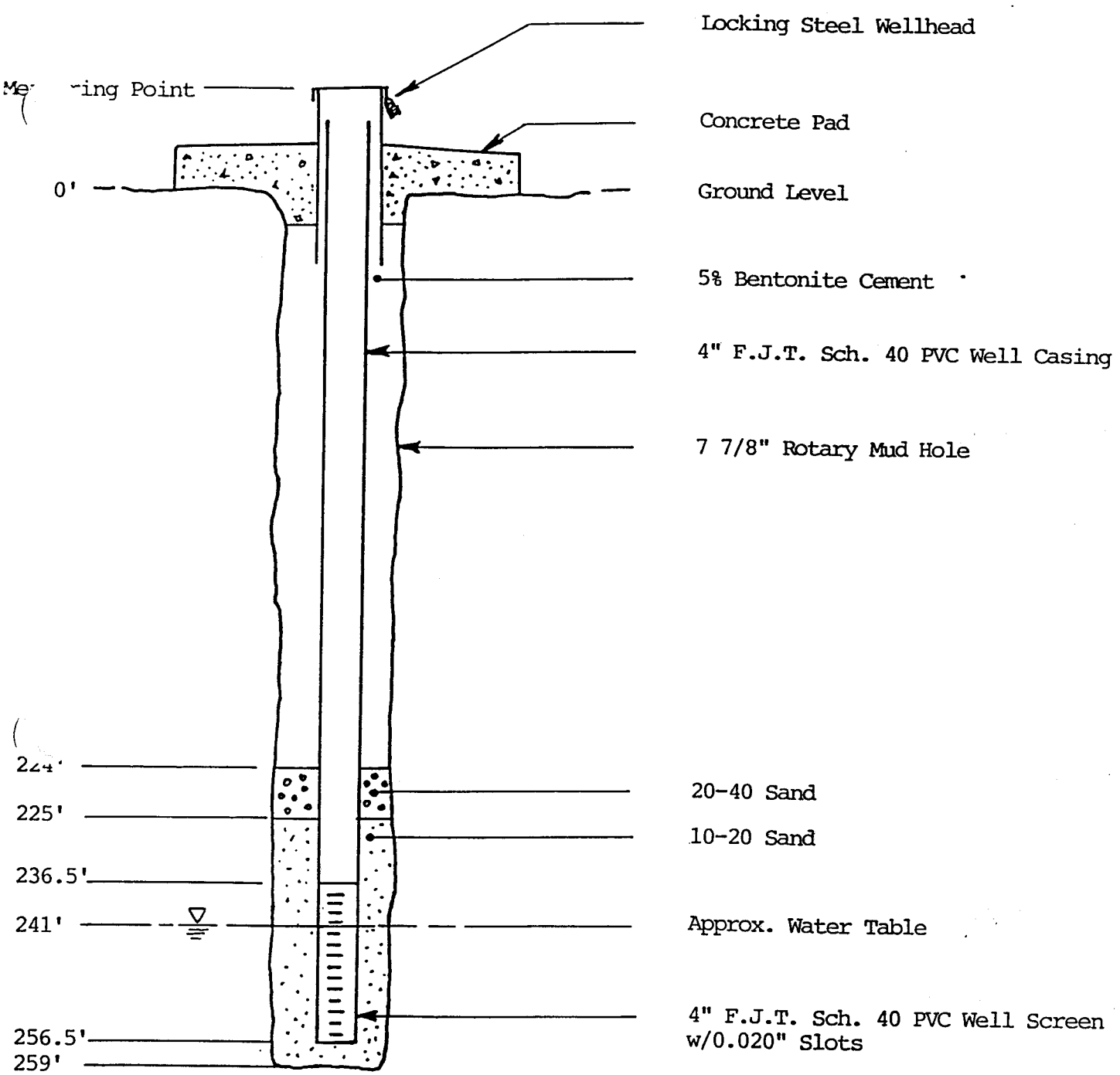


CONSTRUCTION DIAGRAM

PSMW- 24

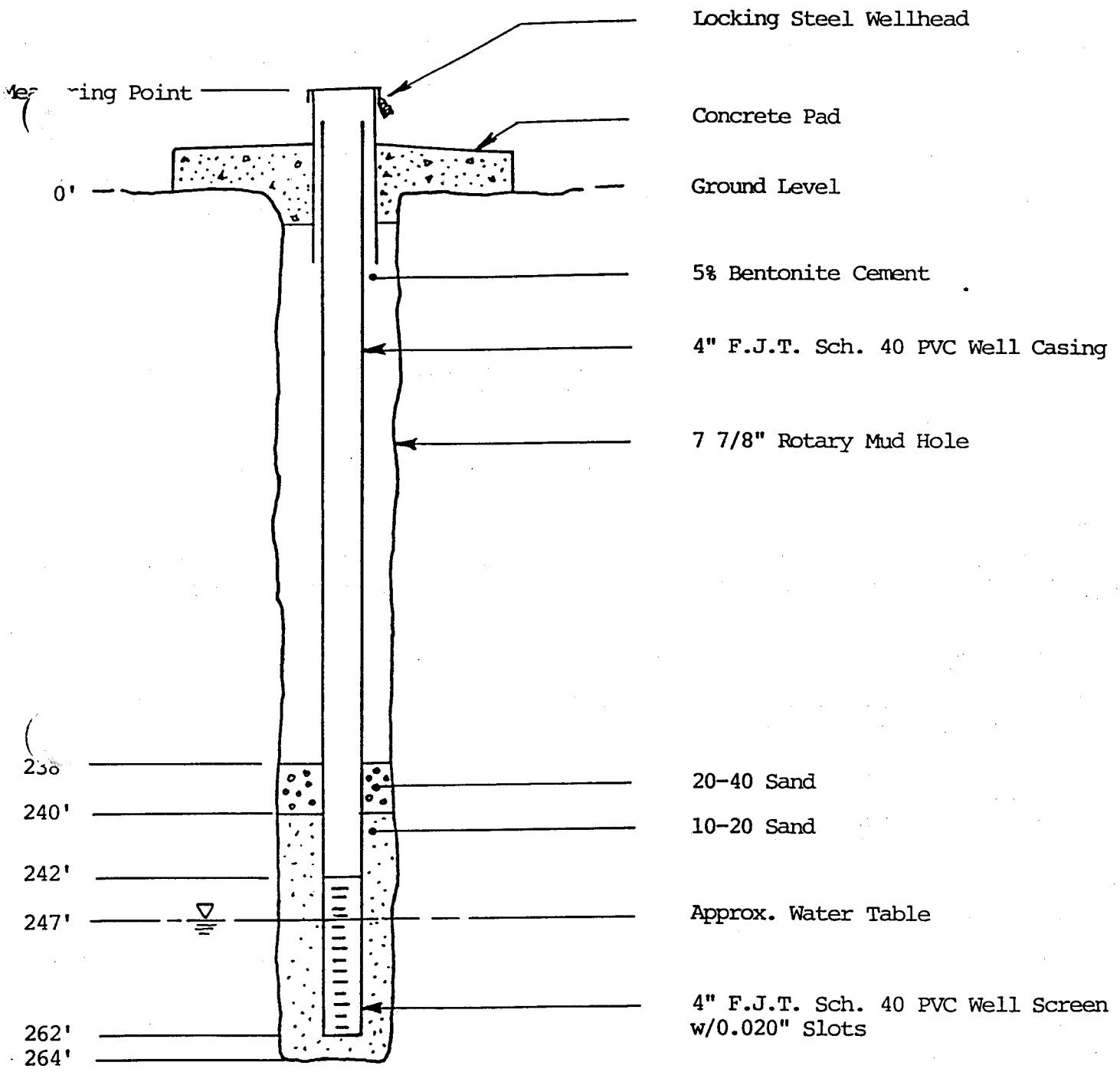


CONSTRUCTION DIAGRAM

PSMW- 26

**METRIC**
Corporation ENVIRONMENTAL ENGINEERING AND SCIENCE

8428 WASHINGTON PLACE NE, SUITE A
ALBUQUERQUE, NEW MEXICO 87113
Phone: (505) 828-2801
Fax: (505) 828-2803

August 28, 1996

Bill Piaz
Public Service Company of New Mexico
Alvarado Square, MS ER16
Albuquerque, NM 87158

Dear Bill:

Enclosed is the information you requested concerning the pumping equipment in the recovery wells at Person Station:

| WELL # | DOLE VALVE | PUMP | MOTOR | FRANKLIN MOTOR # |
|---|---|---|---|---|
| PSMW-16 | 10 GPM | Sta-Rite L30P4J | 5 H.P. 460 v. 3 phase | Model #2343277004 Ser. #11-0900 Date - B 93 |
| VEW | 4 GPM | Sta-Rite 10P4C | 1 ½ H.P. 480 v. 3 phase | Model #2345249404 Ser. #15-2780 Date - 2A 95 |
| EW-1 | 4 GPM | Sta-Rite L10P4F | 1 ½ H.P. 480 v. 3 phase | Model #2345249404 Ser. #26-4765 Date - 2A 95 |
| PSMW-24 | 7 GPM | Goulds 13GS10 | 1 ½ H.P. 460 v. 3 phase | Model #2345249404 Ser. #31-0209 Date - 2A 95 |
| PSMW-25 | 1.5 GPM | Goulds 10GS07 | 1 H.P. 460 v. 3 phase | Model #2345231 Ser. #24:0059 Date - 2A 96 |
| PSMW-26 | 3.5 GPM | Myers N712R | 1 H.P. 460 v. 3 phase | Model #2345231 Ser. #24:0049 Date - 2A 96 |

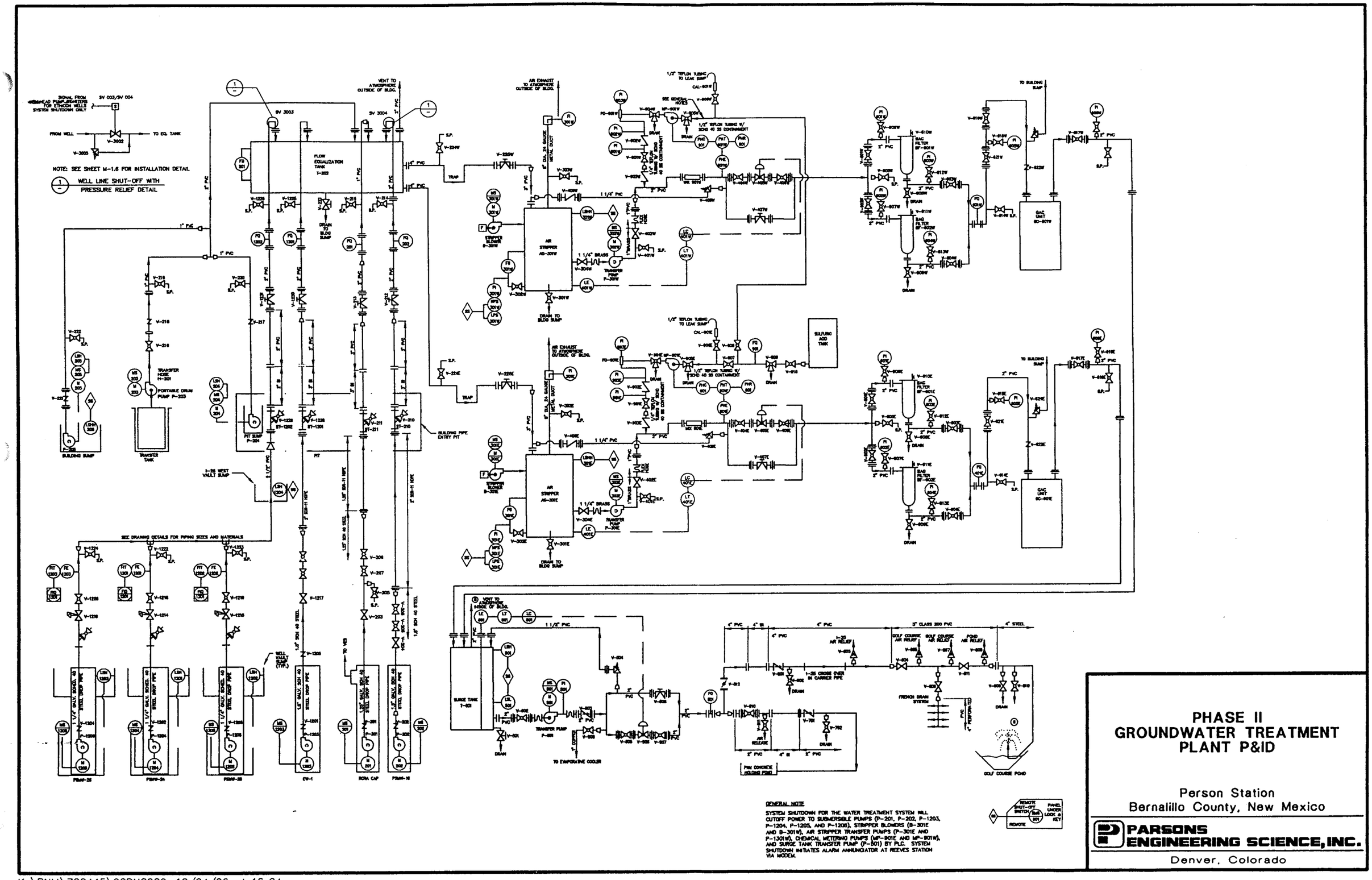


# PHASE II GROUNDWATER TREATMENT PLANT P&ID

Person Station
Bernalillo County, New Mexico

PARSONS ENGINEERING SCIENCE, INC.
Denver, Colorado

K:\PNM\722445\96DN0929, 10/04/96 at 16:04

The following photos depict the essential elements of the Phase II improvements of the treatment train. Included in the order in which they occur are the bulk acid tote storage, acid metering pumps, pH transmitter, acid injection, flow controls, static mixer, pH probe, flow indicating transmitter, bag filters and GAC tank and outlet.

**Photo 2. Acid metering pump system for east and west treatment train.**

**Photo 1. Bulk acid (tote) storage. Safety shower and outwash station.**

**Photo 3. Acid metering with local hands-off auto. Safety shower.**


**Photo 4. pH transmitter for the east treatment train. Dual channel pH controller for metering pumps.**

**Photo 5. pH indicating transmitter.**

**Photo 6. Acid injection, flow control cycles back to air stripper, static mixer and pH probe for west treatment train.**

**Photo 7. Flow control on treated water tank.**

**Photo 8. Flow-indicating transmitter for wells PSMW-24, PSMW-25, PSMW-26.**

**Photo 9. Bag filter prior to GAC tank.**

# APPENDIX B

# PERFORMANCE EVALUATION DATA

Analytical Technologies, Inc.

2709-D Pan American Freeway, NE Albuquerque, NM 87107
Phone (505) 344-3777 FAX (505) 344-4413

ATI I.D. **511367**

December 8, 1995

Public Service Co of NM
Alvarado Square ER16
Albuquerque, NM 87158

Project Name/Number: PERSON STATION REMEDIATION

Attention: Steve Anderson

On **11/22/95**, Analytical Technologies, Inc., (ADHS License No. AZ0015), received a request to analyze **aqueous** samples. The samples were analyzed with EPA methodology or equivalent methods. The results of these analyses and the quality control data, which follow each set of analyses, are enclosed.

If you have any questions or comments, please do not hesitate to contact us at (505) 344-3777.

Kimberly D. McNeill
Project Manager

H. Mitchell Rubenstein, Ph.D.
Laboratory Manager

MR:jt

Enclosure

lTechnologies,Inc.

| | | | |
|---|---|---|---|
| | : PUBLIC SERVICE CO OF NM | DATE RECEIVED | : 11/22/95 |
| T # | : REMEDIATION | | |
| T NAME | : PERSON STATION | REPORT DATE | : 12/08/95 |

ATI ID: 511367

| CLIENT DESCRIPTION | MATRIX | DATE COLLECTED |
|---|---|---|
| GTS-INFLUENT | AQUEOUS | 11/22/95 |
| GTS-AIR STRIPPER EFFLUENT WEST | AQUEOUS | 11/22/95 |
| GTS GAC EFFLUENT WEST | AQUEOUS | 11/22/95 |
| UNM EAST RESERVOIR | AQUEOUS | 11/22/95 |
| UNM WEST RESERVOIR | AQUEOUS | 11/22/95 |
| VEW INFLUENT | AQUEOUS | 11/22/95 |
| PSMW-16 INFLUENT | AQUEOUS | 11/22/95 |
| EW-1 INFLUENT | AQUEOUS | 11/22/95 |
| TRIP BLANK | AQUEOUS | 11/20/95 |

---TOTALS---

| MATRIX | #SAMPLES |
|---|---|
| AQUEOUS | 9 |

ATI STANDARD DISPOSAL PRACTICE

mples from this project will be disposed of in thirty (30) days from
te of this report. If an extended storage period is required, pl
t our sample control department before the scheduled disposal date

AnalyticalTechnologies,Inc. GAS CHROMATOGRAPHY RESULTS

TEST : PURGEABLE HALOCARBONS (EPA 8010)
CLIENT : PUBLIC SERVICE CO OF NM ATI I.D.: 511367
PROJECT # : REMEDIATION
PROJECT NAME : PERSON STATION

| SAMPLE ID. # | CLIENT I.D. | MATRIX | DATE SAMPLED | DATE EXTRACTED | DATE ANALYZED | DIL. FACTOR |
|---|---|---|---|---|---|---|
| 01 | GTS-INFLUENT | AQUEOUS | 11/22/95 | NA | 12/04/95 | 1 |
| 02 | GTS-AIR STRIPPER WEST | AQUEOUS | 11/22/95 | NA | 12/04/95 | 1 |
| 03 | GTS GAC EFFLUENT WEST | AQUEOUS | 11/22/95 | NA | 12/04/95 | 1 |

| PARAMETER | UNITS | 01 | 02 | 03 |
|---|---|---|---|---|
| BROMODICHLOROMETHANE | UG/L | <0.2 | <0.2 | <0.2 |
| **BROMOFORM** | **UG/L** | **0.6** | <0.5 | <0.5 |
| BROMOMETHANE | UG/L | <1.0 | <1.0 | <1.0 |
| CARBON TETRACHLORIDE | UG/L | <0.2 | <0.2 | <0.2 |
| CHLOROBENZENE | UG/L | <0.5 | <0.5 | <0.5 |
| CHLOROETHANE | UG/L | <0.5 | <0.5 | <0.5 |
| CHLOROFORM | UG/L | <0.5 | <0.5 | <0.5 |
| CHLOROMETHANE | UG/L | <1.0 | <1.0 | <1.0 |
| DIBROMOCHLOROMETHANE | UG/L | <0.2 | <0.2 | <0.2 |
| 1,2-DIBROMOETHANE (EDB) | UG/L | <0.2 | <0.2 | <0.2 |
| 1,2-DICHLOROBENZENE | UG/L | <0.5 | <0.5 | <0.5 |
| 1,3-DICHLOROBENZENE | UG/L | <0.5 | <0.5 | <0.5 |
| 1,4-DICHLOROBENZENE | UG/L | <0.5 | <0.5 | <0.5 |
| 1,1-DICHLOROETHANE | UG/L | <0.3 | <0.3 | <0.3 |
| 1,2-DICHLOROETHANE (EDC) | UG/L | <0.5 | <0.5 | <0.5 |
| **1,1-DICHLOROETHENE** | **UG/L** | **17** | <0.2 | <0.2 |
| CIS-1,2-DICHLOROETHENE | UG/L | <0.2 | <0.2 | <0.2 |
| TRANS-1,2-DICHLOROETHENE | UG/L | <1.0 | <1.0 | <1.0 |
| 1,2-DICHLOROPROPANE | UG/L | <0.2 | <0.2 | <0.2 |
| CIS-1,3-DICHLOROPROPENE | UG/L | <0.2 | <0.2 | <0.2 |
| TRANS-1,3-DICHLOROPROPENE | UG/L | <0.2 | <0.2 | <0.2 |
| METHYLENE CHLORIDE | UG/L | <2.0 | <2.0 | <2.0 |
| **1,1,2,2-TETRACHLOROETHANE** | **UG/L** | <0.2 | <0.2 | **0.2** |
| **TETRACHLOROETHENE** | **UG/L** | **39 D(10)** | <0.5 | <0.5 |
| **1,1,1-TRICHLOROETHANE** | **UG/L** | **1.9** | <1.0 | <1.0 |
| 1,1,2-TRICHLOROETHANE | UG/L | <0.2 | <0.2 | <0.2 |
| TRICHLOROETHENE | UG/L | <0.3 | <0.3 | <0.3 |
| TRICHLOROFLUOROMETHANE | UG/L | <0.2 | <0.2 | <0.2 |
| VINYL CHLORIDE | UG/L | <0.5 | <0.5 | <0.5 |
| SURROGATE: | | | | |
| BROMOCHLOROMETHANE (%) | | 99 | 95 | 99 |

D(10)=DILUTED 10X, ANALYZED 12/04/95

GAS CHROMATOGRAPHY RESULTS

lTechnologies,Inc.

: PURGEABLE HALOCARBONS (EPA 8010)
: PUBLIC SERVICE CO OF NM ATI I.D.: 511367
# : REMEDIATION
NAME : PERSON STATION

| CLIENT I.D. | MATRIX | DATE SAMPLED | DATE EXTRACTED | DATE ANALYZED | DIL. FACTOR |
|---|---|---|---|---|---|
| UNM EAST RESERVOIR | AQUEOUS | 11/22/95 | NA | 12/04/95 | 1 |
| UNM WEST RESERVOIR | AQUEOUS | 11/22/95 | NA | 12/04/95 | 1 |
| VEW INFLUENT | AQUEOUS | 11/22/95 | NA | 12/05/95 | 1 |

| ER | UNITS | 04 | 05 | 06 |
|---|---|---|---|---|
| CHLOROMETHANE | UG/L | <0.2 | <0.2 | <0.2 |
| RM | UG/L | <0.5 | <0.5 | <0.5 |
| THANE | UG/L | <1.0 | <1.0 | <1.0 |
| TETRACHLORIDE | UG/L | <0.2 | <0.2 | <0.2 |
| ENZENE | UG/L | <0.5 | <0.5 | <0.5 |
| THANE | UG/L | <0.5 | <0.5 | <0.5 |
| ORM | UG/L | <0.5 | <0.5 | <0.5 |
| ETHANE | UG/L | <1.0 | <1.0 | <1.0 |
| CHLOROMETHANE | UG/L | <0.2 | <0.2 | <0.2 |
| ROMOETHANE (EDB) | UG/L | <0.2 | <0.2 | <0.2 |
| HLOROBENZENE | UG/L | <0.5 | <0.5 | <0.5 |
| HLOROBENZENE | UG/L | <0.5 | <0.5 | <0.5 |
| HLOROBENZENE | UG/L | <0.5 | <0.5 | <0.[illegible] |
| **HLOROETHANE** | **UG/L** | <0.3 | <0.3 | **0.[illegible]** |
| HLOROETHANE (EDC) | UG/L | <0.5 | <0.5 | <0.5 |
| **HLOROETHENE** | **UG/L** | <0.2 | <0.2 | **1.1** |
| -DICHLOROETHENE | UG/L | <0.2 | <0.2 | <0.2 |
| ,2-DICHLOROETHENE | UG/L | <1.0 | <1.0 | <1.0 |
| HLOROPROPANE | UG/L | <0.2 | <0.2 | <0.2 |
| -DICHLOROPROPENE | UG/L | <0.2 | <0.2 | <0.2 |
| ,3-DICHLOROPROPENE | UG/L | <0.2 | <0.2 | <0.2 |
| NE CHLORIDE | UG/L | <2.0 | <2.0 | <2.0 |
| -TETRACHLOROETHANE | UG/L | <0.2 | <0.2 | <0.2 |
| **LOROETHENE** | **UG/L** | <0.5 | <0.5 | **4.6** |
| RICHLOROETHANE | UG/L | <1.0 | <1.0 | <1.0 |
| RICHLOROETHANE | UG/L | <0.2 | <0.2 | <0.2 |
| ROETHENE | UG/L | <0.3 | <0.3 | <0.3 |
| ROFLUOROMETHANE | UG/L | <0.2 | <0.2 | <0.2 |
| HLORIDE | UG/L | <0.5 | <0.5 | <0.5 |

TE:

| | | | | |
|---|---|---|---|---|
| LOROMETHANE (%) | | 102 | 91 | 97 |

AnalyticalTechnologies,Inc.

# GAS CHROMATOGRAPHY RESULTS

TEST : PURGEABLE HALOCARBONS (EPA 8010)
CLIENT : PUBLIC SERVICE CO OF NM ATI I.D.: 511367
PROJECT # : REMEDIATION
PROJECT NAME : PERSON STATION

| SAMPLE ID. # | CLIENT I.D. | MATRIX | DATE SAMPLED | DATE EXTRACTED | DATE ANALYZED | DIL. FACTOR |
|---|---|---|---|---|---|---|
| 07 | PSMW-16 INFLUENT | AQUEOUS | 11/22/95 | NA | 12/05/95 | 1 |
| 08 | EW-1 INFLUENT | AQUEOUS | 11/22/95 | NA | 12/05/95 | 1 |
| 09 | TRIP BLANK | AQUEOUS | 11/20/95 | NA | 12/05/95 | 1 |

| PARAMETER | UNITS | 07 | 08 | 09 |
|---|---|---|---|---|
| BROMODICHLOROMETHANE | UG/L | <0.2 | <0.2 | <0.2 |
| **BROMOFORM** | **UG/L** | **0.6** | <0.5 | <0.5 |
| BROMOMETHANE | UG/L | <1.0 | <1.0 | <1.0 |
| CARBON TETRACHLORIDE | UG/L | <0.2 | <0.2 | <0.2 |
| CHLOROBENZENE | UG/L | <0.5 | <0.5 | <0.5 |
| CHLOROETHANE | UG/L | <0.5 | <0.5 | <0.5 |
| **CHLOROFORM** | **UG/L** | **1.0** | <0.5 | <0.5 |
| CHLOROMETHANE | UG/L | <1.0 | <1.0 | <1.0 |
| DIBROMOCHLOROMETHANE | UG/L | <0.2 | <0.2 | <0.2 |
| 1,2-DIBROMOETHANE (EDB) | UG/L | <0.2 | <0.2 | <0.2 |
| 1,2-DICHLOROBENZENE | UG/L | <0.5 | <0.5 | <0.5 |
| 1,3-DICHLOROBENZENE | UG/L | <0.5 | <0.5 | <0.5 |
| 1,4-DICHLOROBENZENE | UG/L | <0.5 | <0.5 | <0.5 |
| **1,1-DICHLOROETHANE** | **UG/L** | **0.3** | **0.8** | <0.3 |
| 1,2-DICHLOROETHANE (EDC) | UG/L | <0.5 | <0.5 | <0.5 |
| **1,1-DICHLOROETHENE** | **UG/L** | **35 D(10)** | **9.5** | <0.2 |
| CIS-1,2-DICHLOROETHENE | UG/L | <0.2 | <0.2 | <0.2 |
| TRANS-1,2-DICHLOROETHENE | UG/L | <1.0 | <1.0 | <1.0 |
| 1,2-DICHLOROPROPANE | UG/L | <0.2 | <0.2 | <0.2 |
| CIS-1,3-DICHLOROPROPENE | UG/L | <0.2 | <0.2 | <0.2 |
| TRANS-1,3-DICHLOROPROPENE | UG/L | <0.2 | <0.2 | <0.2 |
| METHYLENE CHLORIDE | UG/L | <2.0 | <2.0 | <2.0 |
| 1,1,2,2-TETRACHLOROETHANE | UG/L | <0.2 | <0.2 | <0.2 |
| **TETRACHLOROETHENE** | **UG/L** | **58 D(10)** | **38 D(10)** | <0.5 |
| **1,1,1-TRICHLOROETHANE** | **UG/L** | **2.6** | **3.0** | <1.0 |
| 1,1,2-TRICHLOROETHANE | UG/L | <0.2 | <0.2 | <0.2 |
| **TRICHLOROETHENE** | **UG/L** | <0.3 | <0.3 | **4.1** |
| TRICHLOROFLUOROMETHANE | UG/L | <0.2 | <0.2 | <0.2 |
| VINYL CHLORIDE | UG/L | <0.5 | <0.5 | <0.5 |
| SURROGATE: | | | | |
| BROMOCHLOROMETHANE (%) | | 96 | 102 | 102 |

D(10)=DILUTED 10X, ANALYZED 12/05/95

lTechnologies,Inc.

GAS CHROMATOGRAPHY RESULTS - QUALITY CONTROL

REAGENT BLANK

| | | | |
|---|---|---|---|
| | : EPA 8010 | ATI I.D. | : 511367 |
| .D. | : 120495 | MATRIX | : AQUEOUS |
| | : PUBLIC SERVICE CO OF NM | DATE EXTRACTED | : NA |
| # | : REMEDIATION | DATE ANALYZED | : 12/04/95 |
| NAME | : PERSON STATION | DIL. FACTOR | : 1 |

| ER | UNITS | |
|---|---|---|
| CHLOROMETHANE | UG/L | <0.2 |
| RM | UG/L | <0.5 |
| THANE | UG/L | <1.0 |
| TETRACHLORIDE | UG/L | <0.2 |
| ENZENE | UG/L | <0.5 |
| THANE | UG/L | <0.5 |
| ORM | UG/L | <0.5 |
| ETHANE | UG/L | <1.0 |
| CHLOROMETHANE | UG/L | <0.2 |
| ROMOETHANE (EDB) | UG/L | <0.2 |
| HLOROBENZENE | UG/L | <0.5 |
| HLOROBENZENE | UG/L | <0.5 |
| HLOROBENZENE | UG/L | <0.5 |
| HLOROETHANE | UG/L | <0.3 |
| HLOROETHANE (EDC) | UG/L | <0.5 |
| HLOROETHENE | UG/L | <0.2 |
| -DICHLOROETHENE | UG/L | <0.2 |
| ,2-DICHLOROETHENE | UG/L | <1.0 |
| HLOROPROPANE | UG/L | <0.2 |
| -DICHLOROPROPENE | UG/L | <0.2 |
| ,3-DICHLOROPROPENE | UG/L | <0.2 |
| NE CHLORIDE | UG/L | <2.0 |
| -TETRACHLOROETHANE | UG/L | <0.2 |
| LOROETHENE | UG/L | <0.5 |
| RICHLOROETHANE | UG/L | <1.0 |
| RICHLOROETHANE | UG/L | <0.2 |
| ROETHENE | UG/L | <0.3 |
| ROFLUOROMETHANE | UG/L | <0.2 |
| CHLORIDE | UG/L | <0.5 |

ATE:
HLOROMETHANE (%) 111

AnalyticalTechnologies,Inc.

# GAS CHROMATOGRAPHY - QUALITY CONTROL

## MSMSD

| | | | |
|---|---|---|---|
| TEST | : PURGEABLE HALOCARBONS (EPA 8010) | | |
| MSMSD # | : 51136703 | ATI I.D. | : 511367 |
| CLIENT | : PUBLIC SERVICE CO OF NM | DATE EXTRACTED | : NA |
| PROJECT # | : REMEDIATION | DATE ANALYZED | : 12/05/95 |
| PROJECT NAME | : PERSON STATION | SAMPLE MATRIX | : AQUEOUS |
| REF. I.D. | : 51136703 | UNITS | : UG/L |

| PARAMETER | SAMPLE RESULT | CONC SPIKE | SPIKED SAMPLE | % REC | DUP SPIKE | DUP % REC | RPD |
|---|---|---|---|---|---|---|---|
| CHLOROBENZENE | <0.5 | 10.0 | 9.4 | 94 | 9.5 | 95 | 1 |
| 1,1-DICHLOROETHENE | <0.2 | 10.0 | 8.9 | 89 | 8.7 | 87 | 2 |
| TRICHLOROETHENE | <0.3 | 10.0 | 10.3 | 103 | 9.6 | 96 | 7 |

$$\% \text{ Recovery} = \frac{(\text{Spike Sample Result} - \text{Sample Result})}{\text{Spike Concentration}} \times 100$$

$$\text{RPD (Relative Percent Difference)} = \frac{(\text{Sample Result} - \text{Duplicate Result})}{\text{Average Result}} \times 100$$

Analytical Technologies, Inc., Albuquerque, NM
San Diego • Phoenix • Seattle • Pensacola • Ft Collins • Portland • Albuquerque

# CHAIN OF CUSTODY

DATE: 11 22 97 PAGE 1 OF 2

ATI LAB I.D. 511367

PLEASE FILL THIS FORM IN COMPLETELY. SHADED AREAS ARE FOR LAB USE ONLY.

PROJECT MANAGER: ~~RON JOHNSON~~ Steve Anderson

COMPANY: PUBLIC SERVICE COMPANY OF NEW MEXICO
ADDRESS: ALVARADO SQUARE - 0408
ALBUQUERQUE, NM 87158
PHONE: (505) ~~241-2998~~ 241-2057
FAX: (505) ~~241-2340~~ 241-4457

BILL TO: SAME
COMPANY:
ADDRESS: Steve Anderson
ATTN: ~~RON JOHNSON~~

ANALYSIS REQUEST

| SAMPLE ID | DATE | TIME | MATRIX | LAB ID | Petroleum Hydrocarbons (418.1) | (MOD 8015) Gas/Diesel | Diesel/Gasoline/BTXE/MTBE (MOD 8015/8020) | BTXE/MTBE (8020) | | | Chlorinated Hydrocarbons (601/8010) | Aromatic Hydrocarbons (602/8020) | SDWA Volatiles (502.1/503.1), 502.2 Reg. & Unreg. | | | Pesticides/PCB (608/8080) | Herbicides (615/8150) | Base/Neutral/Acid Compounds GC/MS (625/8270) | Volatile Organics GC/MS (624/8240) | Polynuclear Aromatics (610/8310) | | | SDWA Primary Standards - Arizona | SDWA Secondary Standards - Arizona | SDWA Primary Standards - Federal | SDWA Secondary Standards - Federal | | | The 13 Priority Pollutant Metals | RCRA Metals by Total Digestion | RCRA Metals by TCLP (1311) | | NUMBER OF CONTAINERS |
|---|---|---|---|---|---|---|---|---|---|---|---|---|---|---|---|---|---|---|---|---|---|---|---|---|---|---|---|---|---|---|---|---|---|---|
| GTS-INFLUENT | 11-22-97 | 0511 | W | -01 | | | | | | | X | | | | | | | | | | | | | | | | | | | | | | | 3 |
| ~~GTS-AIR STRIPPER EFFLUENT EAST~~ | | | ~~W~~ | | | | | | | | ~~X~~ | | | | | | | | | | | | | | | | | | | | | | | |
| GTS-AIR STRIPPER EFFLUENT WEST | 11-22-97 | 0509 | W | -02 | | | | | | | X | | | | | | | | | | | | | | | | | | | | | | | 3 |
| ~~GTS GAC EFFLUENT EAST~~ | | ~~0507~~ | ~~W~~ | | | | | | | | ~~X~~ | | | | | | | | | | | | | | | | | | | | | | | |
| GTS GAC EFFLUENT WEST | 11-22-97 | 0507 | W | -03 | | | | | | | X | | | | | | | | | | | | | | | | | | | | | | | 3 |
| UNM EAST RESERVOIR | 11-22-97 | 0951 | W | -04 | | | | | | | X | | | | | | | | | | | | | | | | | | | | | | | 3 |
| UNM WEST RESERVOIR | 11-22-97 | 0957 | W | -05 | | | | | | | X | | | | | | | | | | | | | | | | | | | | | | | 3 |
| ~~TRIP BLANK~~ | | | ~~W~~ | | | | | | | | ~~X~~ | | | | | | | | | | | | | | | | | | | | | | | ~~1~~ |

| PROJECT INFORMATION | | SAMPLE RECEIPT | |
|---|---|---|---|
| PROJ. NO.: | REMEDIATION | NO. CONTAINERS | 15 |
| PROJ. NAME: | PERSON STATION | CUSTODY SEALS | Y / N / NA |
| P.O. NO.: | | RECEIVED INTACT | Y |
| SHIPPED VIA: | | RECEIVED COLD | Y |

PRIOR AUTHORIZATION IS REQUIRED FOR RUSH PROJECTS

(RUSH) ☐ 24hr ☐ 48hr ☐ 72hr ☐ 1 WEEK (NORMAL) ☐ 2 WEEK

Comments:

**PLEASE PROVIDE DATA ON DISKETTE AS WELL AS HARD COPY**

| SAMPLED & RELINQUISHED BY: 1. | RELINQUISHED BY: 2. | RELINQUISHED BY: 3. |
|---|---|---|
| Signature: [illegible] Time: 1047 | Signature: Time: | Signature: Time: |
| Printed Name: C. Hu[illegible] Date: 11.22.97 | Printed Name: Date: | Printed Name: Date: |
| Company: PNM Phone: 241-4744 | Company: | Company: |

| RECEIVED BY: 1. | RECEIVED BY: 2. | RECEIVED BY: (LAB) 3. |
|---|---|---|
| Signature: Time: | Signature: Time: | Signature: [illegible] Time: 1050 |
| Printed Name: Date: | Printed Name: Date: | Printed Name: Andrew Parker Date: 11/22 |
| Company: | Company: | Analytical Technologies, Inc. |

Analytical Technologies, Inc., Albuquerque, NM
San Diego • Phoenix • Seattle • Pensacola • Ft. Collins • Portland • Albuquerque

# CHAIN OF CUSTODY

DATE 11-21 PAGE 2 OF 2

ATI LAB I.D. 511367

PLEASE FILL THIS FORM IN COMPLETELY. SHADED AREAS ARE FOR LAB USE ONLY.

PROJECT MANAGER: ~~RON JOHNSON~~ Steve Anderson

COMPANY: PUBLIC SERVICE COMPANY OF NEW MEXICO
ADDRESS: ALVARADO SQUARE - ~~0408~~ 2216
ALBUQUERQUE, NM 87158
PHONE: (505) ~~241-2998~~ 241-2051
FAX: (505) ~~241-2340~~ 241 2427

BILL TO: SAME
COMPANY:
ADDRESS: Steve Anderson
ATTN: ~~RON JOHNSON~~

## ANALYSIS REQUEST

| SAMPLE ID | DATE | TIME | MATRIX | LAB ID | Petroleum Hydrocarbons (418.1) | (MOD 8015) Gas/Diesel | Diesel/Gasoline/BTXE/MTBE (MOD 8015/8020) | BTXE/MTBE (8020) | Chlorinated Hydrocarbons (601/8010) | Aromatic Hydrocarbons (602/8020) | SDWA Volatiles (502.1/503.1), 502.2 Reg. & Unreg. | Pesticides/PCB (608/8080) | Herbicides (615/8150) | Base/Neutral/Acid Compounds GC/MS (625/8270) | Volatile Organics GC/MS (624/8240) | Polynuclear Aromatics (610/8310) | SDWA Primary Standards - Arizona | SDWA Secondary Standards - Arizona | SDWA Primary Standards - Federal | SDWA Secondary Standards - Federal | The 13 Priority Pollutant Metals | RCRA Metals by Total Digestion | RCRA Metals by TCLP (1311) | NUMBER OF CONTAINERS |
|---|---|---|---|---|---|---|---|---|---|---|---|---|---|---|---|---|---|---|---|---|---|---|---|---|
| VEW INFLUENT | 11-22-97 | 0913 | W | -06 | | | | | X | | | | | | | | | | | | | | | 3 |
| PSMW-16 INFLUENT | 11-22-97 | 0916 | W | -07 | | | | | X | | | | | | | | | | | | | | | 3 |
| EW-1 INFLUENT | 11-22-97 | 0915 | W | -08 | | | | | X | | | | | | | | | | | | | | | 3 |
| ~~PSMW-24,25,26 INFLUENT~~ | | | ~~W~~ | | | | | | ~~X~~ | | | | | | | | | | | | | | | |
| TRIP BLANK | 11/20 | | W | -09 | | | | | X | | | | | | | | | | | | | | | 1 |

## PROJECT INFORMATION

PROJ. NO.: REMEDIATION
PROJ. NAME: PERSONNATION
P.O. NO.:
SHIPPER:

## SAMPLE RECEIPT

| | |
|---|---|
| NO. CONTAINERS | ~~25~~ 10 |
| CUSTODY SEALS | Y / N / NA |
| RECEIVED INTACT | Y |
| RECEIVED COLD | Y |

PRIOR AUTHORIZATION IS REQUIRED FOR RUSH PROJECTS

(RUSH) ☐ 24hr ☐ 48hr ☐ 72hr ☐ 1 WEEK (NORMAL) ☐ 2 WEEK

Comments:

**PLEASE PROVIDE DATA ON DISKETTE AS WELL AS HARD COPY**

| SAMPLED & RELINQUISHED BY: 1. | RELINQUISHED BY: 2. | RELINQUISHED BY: 3. |
|---|---|---|
| Signature: [illegible] Time: 1041 | Signature: Time: | Signature: Time: |
| Printed Name: [illegible] Date: 11-22-97 | Printed Name: Date: | Printed Name: Date: |
| Company: PNM Phone: 241-4747 | Company: | Company: |

| RECEIVED BY: 1. | RECEIVED BY: 2. | RECEIVED BY: (LAB) 3. |
|---|---|---|
| Signature: Time: | Signature: Time: | Signature: [illegible] Time: 1050 |
| Printed Name: Date: | Printed Name: Date: | Printed Name: Andrew Parker Date: 11/22 |
| Company: | Company: | Analytical Technologies, Inc. |

American Environmental Network (N.M.), Inc.
Albuquerque Office: 2709-D Pan American Fwy., NE
Albuquerque, NM 87107
(505) 344-3777
Remit To: American Environmental Network (N.M.), Inc.
P.O. Box 5676
Boston, MA 02206

# American Environmental Network, Inc.

Bill To: Public Service Company
Alvarado Square-MSO408
Albuquerque, NM 87158

Client #: 340-559

| Date | Invoice |
|---|---|
| 8/27/96 | 75586 |

Project #: Remediation
Proj. Name: Person Station

Original
BALANCE DUE: 892.00

| PO Number | Terms | Project |
|---|---|---|
| | Net 30 | AEN ALB-810 |

| Quantity | Description | Rate | Amount |
|---|---|---|---|
| 9 | EPA Method 8010 | 90.00 | 810.00 |
| | Data Disk | 35.00 | 35.00 |
| | NM Gross Receipts Tax | 5.5625% | 47.00 |
| | Accession #:608331<br>Authorized by:Ron Johnson | TOTAL: | 892.00 |

A finance charge of 1½% will be charged on balances 30 days past due
DISTRIBUTION: White-Customer, Yellow-File, Pink-Accounting

# nerican Environmental Network, Inc

AEN I.D. 608331

gust 27, 1996

BLIC SERVICE COMPANY OF NM
VARADO SQUARE-MSO408
BUQUERQUE, NM 87158

ject Name PERSON STATION
ject Number REMEDIATION

ntion: RON JOHNSON

8/15/96 American Environmental Network (NM), Inc. (ADHS License No. AZ0015),
eived a request to analyze **aqueous** samples. The samples were analyzed
EPA methodology or equivalent methods. The results of these analyses and the quality
trol data, which follow each set of analyses, are enclosed.

ou have any questions or comments, please do not hesitate to contact us
505)344-3777.

berly D. McNeill
ject Manager

H. Mitchell Rubenstein, Ph. D.
General Manager

: mt

losure

2709-D Pan American Freeway, NE • Albuquerque, NM 87107 • (505) 344-3777 • Fax (602) 344-4413

*American Environmental Network, Inc.*

| | | | |
|---|---|---|---|
| CLIENT | : PUBLIC SERVICE COMPANY OF NM | AEN I.D. | : 608331 |
| PROJECT # | : REMEDIATION | DATE RECEIVED | : 8/15/96 |
| PROJECT NAME | : PERSON STATION | REPORT DATE | : 8/27/96 |

| AEN ID. # | CLIENT DESCRIPTION | MATRIX | DATE COLLECTED |
|---|---|---|---|
| 01 | GTS-INFLUENT | AQUEOUS | 8/15/96 |
| 02 | GTS-AIR Stripper Effluent West | AQUEOUS | 8/15/96 |
| 03 | GTS GAC EFFLUENT WEST | AQUEOUS | 8/15/96 |
| 04 | UNM EAST RESERVOIR | AQUEOUS | 8/15/96 |
| 05 | UNM WEST RESERVOIR | AQUEOUS | 8/15/96 |
| 06 | VEW INFLUENT | AQUEOUS | 8/15/96 |
| 07 | PSMW-16 INFLUENT | AQUEOUS | 8/15/96 |
| 08 | EW-1 INFLUENT | AQUEOUS | 8/15/96 |
| 09 | PSMW-24,25,26 INFLUENT | AQUEOUS | 8/15/96 |
| 10 | TRIP BLANK | AQUEOUS | 8/15/96 |

*Environmental Network, Inc.*

GAS CHROMOTOGRAPHY RESULTS

: PURGEABLE HALOCARBONS (EPA 8010)
: PUBLIC SERVICE COMPANY OF NM
: REMEDIATION
: PERSON STATION

AEN I.D.: 608331

| ENT I.D. | MATRIX | DATE SAMPLED | DATE EXTRACTED | DATE ANALYZED | DIL. FACTOR |
|---|---|---|---|---|---|
| S-INFLUENT | AQUEOUS | 8/15/96 | NA | 8/15/96 | 1 |
| S-AIR STRIPPER EFFLUENT WEST | AQUEOUS | 8/15/96 | NA | 8/15/96 | 1 |
| S GAC EFFLUENT WEST | AQUEOUS | 8/15/96 | NA | 8/15/96 | 1 |

| | DET. LIMIT | UNITS | 01 | 02 | 03 |
|---|---|---|---|---|---|
| **RMETHANE** | 0.2 | **UG/L** | **0.2** | < 0.2 | < 0.2 |
| | 0.5 | **UG/L** | < 0.5 D(1)A | < 0.5 | < 0.5 |
| E | 1.0 | UG/L | < 1.0 | < 1.0 | < 1.0 |
| CHLORIDE | 0.2 | UG/L | < 0.2 | < 0.2 | < 0.2 |
| NE | 0.5 | UG/L | < 0.5 | < 0.5 | < 0.5 |
| E | 0.5 | UG/L | < 0.5 | < 0.5 | < 0.5 |
| | 0.5 | **UG/L** | **2.1** | < 0.5 | < 0.5 |
| NE | 1.0 | UG/L | < 1.0 | < 1.0 D(1) | < 1.0 D(1) |
| ROMETHANE | 0.2 | UG/L | < 0.2 | < 0.2 | < 0.2 |
| **HANE (EDB)** | 0.2 | **UG/L** | **0.6** | < 0.2 | < 0.2 |
| ENZENE | 0.5 | UG/L | < 0.5 | < 0.5 | < 0.5 |
| ENZENE | 0.5 | UG/L | < 0.5 | < 0.5 | < 0.5 |
| ENZENE | 0.5 | UG/L | < 0.5 | < 0.5 | < 0.5 |
| **THANE** | 0.3 | **UG/L** | **0.9** | < 0.3 | < 0.3 |
| THANE (EDC) | 0.5 | UG/L | < 0.5 | < 0.5 | < 0.5 |
| **THENE** | 0.2 | **UG/L** | **19 D(10)** | < 0.2 | < 0.2 |
| DETHENE | 0.2 | UG/L | < 0.2 | < 0.2 | < 0.2 |
| ROETHENE | 1.0 | UG/L | < 1.0 | < 1.0 | < 1.0 |
| ROPANE | 0.2 | UG/L | < 0.2 | < 0.2 | < 0.2 |
| DPROPENE | 0.2 | UG/L | < 0.2 | < 0.2 | < 0.2 |
| ROPROPENE | 0.2 | UG/L | < 0.2 | < 0.2 | < 0.2 |
| LORIDE | 2.0 | UG/L | < 2.0 | < 2.0 | < 2.0 |
| LOROETHANE | 0.5 | UG/L | < 0.5 | < 0.5 | < 0.5 |
| **ETHENE** | 0.5 | **UG/L** | **36 D(10)** | < 0.5 | < 0.5 |
| **DETHANE** | 1.0 | **UG/L** | **2.1** | < 1.0 | < 1.0 |
| DETHANE | 0.2 | UG/L | < 0.2 | < 0.2 | < 0.2 |
| **ENE** | 0.3 | **UG/L** | **0.3** | < 0.3 | < 0.3 |
| DROMETHANE | 0.2 | UG/L | < 0.2 | < 0.2 | < 0.2 |
| E | 0.5 | UG/L | < 0.5 | < 0.5 | < 0.5 |
| **METHANE (%)** | | | 101 | 102 | 102 |
| **ITS** | ( 73 - 117 ) | | | | |

S: D(1)=ANALYZED 8/19/96. D(10)=DILUTED 10X, ANALYZED 8/19/96.
D(1)A=ANALYZED 8/21/96.

*American Environmental Network, Inc.*

## GAS CHROMOTOGRAPHY RESULTS

TEST : PURGEABLE HALOCARBONS (EPA 8010)
CLIENT : PUBLIC SERVICE COMPANY OF NM AEN I.D.: 608331
PROJECT # : REMEDIATION
PROJECT NAME : PERSON STATION

| SAMPLE ID. # | CLIENT I.D. | MATRIX | DATE SAMPLED | DATE EXTRACTED | DATE ANALYZED | DIL. FACTOR |
|---|---|---|---|---|---|---|
| 04 | UNM EAST RESERVOIR | AQUEOUS | 8/15/96 | NA | 8/16/96 | 1 |
| 05 | UNM WEST RESERVOIR | AQUEOUS | 8/15/96 | NA | 8/16/96 | 1 |
| 06 | VEW INFLUENT | AQUEOUS | 8/15/96 | NA | 8/16/96 | 1 |

| PARAMETER | DET. LIMIT | UNITS | 04 | 05 | 06 |
|---|---|---|---|---|---|
| BROMODICHLORMETHANE | 0.2 | UG/L | < 0.2 | < 0.2 | < 0.2 |
| BROMOFORM | 0.5 | UG/L | < 0.5 | < 0.5 | < 0.5 |
| BROMOMETHANE | 1.0 | UG/L | < 1.0 | < 1.0 | < 1.0 |
| CARBON TETRACHLORIDE | 0.2 | UG/L | < 0.2 | < 0.2 | < 0.2 |
| CHLOROBENZENE | 0.5 | UG/L | < 0.5 | < 0.5 | < 0.5 |
| CHLOROETHANE | 0.5 | UG/L | < 0.5 | < 0.5 | < 0.5 |
| CHLOROFORM | 0.5 | UG/L | < 0.5 | < 0.5 | < 0.5 |
| CHLOROMETHANE | 1.0 | UG/L | < 1.0 | < 1.0 | < 1.0 D(1) |
| DIBROMOCHLOROMETHANE | 0.2 | UG/L | < 0.2 | < 0.2 | < 0.2 |
| 1,2-DIBROMOETHANE (EDB) | 0.2 | UG/L | < 0.2 | < 0.2 | < 0.2 |
| 1,2-DICHLOROBENZENE | 0.5 | UG/L | < 0.5 | < 0.5 | < 0.5 |
| 1,3-DICHLOROBENZENE | 0.5 | UG/L | < 0.5 | < 0.5 | < 0.5 |
| 1,4-DICHLOROBENZENE | 0.5 | UG/L | < 0.5 | < 0.5 | < 0.5 |
| **1,1-DICHLOROETHANE** | 0.3 | **UG/L** | < 0.3 | < 0.3 | **2.4** |
| 1,2-DICHLOROETHANE (EDC) | 0.5 | UG/L | < 0.5 | < 0.5 | < 0.5 |
| **1,1-DICHLOROETHENE** | 0.2 | **UG/L** | < 0.2 | < 0.2 | **2.1** |
| cis-1,2-DICHLOROETHENE | 0.2 | UG/L | < 0.2 | < 0.2 | < 0.2 |
| trans-1,2-DICHLOROETHENE | 1.0 | UG/L | < 1.0 | < 1.0 | < 1.0 |
| 1,2-DICHLOROPROPANE | 0.2 | UG/L | < 0.2 | < 0.2 | < 0.2 |
| cis-1,3-DICHLOROPROPENE | 0.2 | UG/L | < 0.2 | < 0.2 | < 0.2 |
| trans-1,3-DICHLOROPROPENE | 0.2 | UG/L | < 0.2 | < 0.2 | < 0.2 |
| METHYLENE CHLORIDE | 2.0 | UG/L | < 2.0 | < 2.0 | < 2.0 |
| 1,1,2,2-TETRACHLOROETHANE | 0.5 | UG/L | < 0.5 | < 0.5 | < 0.5 |
| **TETRACHLOROETHENE** | 0.5 | **UG/L** | < 0.5 | < 0.5 | **5.0** |
| **1,1,1-TRICHLOROETHANE** | 1.0 | **UG/L** | < 1.0 | < 1.0 | **5.7** |
| 1,1,2-TRICHLOROETHANE | 0.2 | UG/L | < 0.2 | < 0.2 | < 0.2 |
| TRICHLOROETHENE | 0.3 | UG/L | < 0.3 | < 0.3 | < 0.3 |
| TRICHLOROFLUOROMETHANE | 0.2 | UG/L | < 0.2 | < 0.2 | < 0.2 |
| VINYL CHLORIDE | 0.5 | UG/L | < 0.5 | < 0.5 | < 0.5 |
| SURROGATE: | | | | | |
| BROMOCHLOROMETHANE (%) | | | 108 | 98 | 98 |
| SURROGATE LIMITS | ( 73 - 117 ) | | | | |

CHEMIST NOTES: D(1)=ANALYZED 8/19/96.

*Environmental Network, Inc.*

GAS CHROMOTOGRAPHY RESULTS

: PURGEABLE HALOCARBONS (EPA 8010)
: PUBLIC SERVICE COMPANY OF NM
: REMEDIATION
: PERSON STATION

AEN I.D.: 608331

| ENT I.D. | MATRIX | DATE SAMPLED | DATE EXTRACTED | DATE ANALYZED | DIL. FACTOR |
|---|---|---|---|---|---|
| MW-16 INFLUENT | AQUEOUS | 8/15/96 | NA | 8/16/96 | 1 |
| -1 INFLUENT | AQUEOUS | 8/15/96 | NA | 8/16/96 | 1 |
| MW-24,25-26 INFLUENT | AQUEOUS | 8/15/96 | NA | 8/16/96 | 1 |

| | DET. LIMIT | UNITS | 07 | 08 | 09 |
|---|---|---|---|---|---|
| **RMETHANE** | 0.2 | **UG/L** | **0.2** | < 0.2 | **0.4** |
| | 0.5 | **UG/L** | **0.8 D(1)** | < 0.5 D(1) | < 0.5 |
| IE | 1.0 | UG/L | < 1.0 | < 1.0 | < 1.0 |
| CHLORIDE | 0.2 | UG/L | < 0.2 | < 0.2 | < 0.2 |
| NE | 0.5 | UG/L | < 0.5 | < 0.5 | < 0.5 |
| E | 0.5 | UG/L | < 0.5 | < 0.5 | < 0.5 |
| | 0.5 | **UG/L** | **1.6** | < 0.5 | **5.4** |
| NE | 1.0 | UG/L | < 1.0 | < 1.0 | < 1.0 D(1) |
| ROMETHANE | 0.2 | UG/L | < 0.2 | < 0.2 | < 0.2 |
| HANE (EDB) | 0.2 | UG/L | < 0.2 | < 0.2 | < 0.2 |
| ENZENE | 0.5 | UG/L | < 0.5 | < 0.5 | < 0.5 |
| ENZENE | 0.5 | UG/L | < 0.5 | < 0.5 | < 0.5 |
| ENZENE | 0.5 | UG/L | < 0.5 | < 0.5 | < 0.5 |
| **THANE** | 0.3 | **UG/L** | **0.9** | **1.2** | **0.7** |
| THANE (EDC) | 0.5 | UG/L | < 0.5 | < 0.5 | < 0.5 |
| **THENE** | 0.2 | **UG/L** | **51 D(10)** | **8.4** | **50 D(1** |
| **OETHENE** | 0.2 | **UG/L** | < 0.2 | < 0.2 | **0.2** |
| ROETHENE | 1.0 | UG/L | < 1.0 | < 1.0 | < 1.0 |
| ROPANE | 0.2 | UG/L | < 0.2 | < 0.2 | < 0.2 |
| OPROPENE | 0.2 | UG/L | < 0.2 | < 0.2 | < 0.2 |
| ROPROPENE | 0.2 | UG/L | < 0.2 | < 0.2 | < 0.2 |
| LORIDE | 2.0 | UG/L | < 2.0 | < 2.0 | < 2.0 |
| ILOROETHANE | 0.5 | UG/L | < 0.5 | < 0.5 | < 0.5 |
| **ETHENE** | 0.5 | **UG/L** | **120 D(10)** | **45 D(10)** | **47 D(10)** |
| **OETHANE** | 1.0 | **UG/L** | **4.3** | **2.4** | **7.6** |
| OETHANE | 0.2 | UG/L | < 0.2 | < 0.2 | < 0.2 |
| **ENE** | 0.3 | **UG/L** | **0.3** | < 0.3 | < 0.3 |
| OROMETHANE | 0.2 | UG/L | < 0.2 | < 0.2 | < 0.2 |
| E | 0.5 | UG/L | < 0.5 | < 0.5 | < 0.5 |
| METHANE (%) | | | 102 | 94 | 93 |
| IITS | ( 73 - 117 ) | | | | |

S: D(1)= ANALYZED 8/20/96. D(10)= DILUTED 10X, ANALYZED 8/20/96.

*American Environmental Network, Inc.*

## GAS CHROMOTOGRAPHY RESULTS

TEST : PURGEABLE HALOCARBONS (EPA 8010)
CLIENT : PUBLIC SERVICE COMPANY OF NM AEN I.D.: 608331
PROJECT # : REMEDIATION
PROJECT NAME : PERSON STATION

| SAMPLE ID. # | CLIENT I.D. | MATRIX | DATE SAMPLED | DATE EXTRACTED | DATE ANALYZED | DIL. FACTOR |
|---|---|---|---|---|---|---|
| 10 | TRIP BLANK | AQUEOUS | 8/15/96 | NA | 8/20/96 | 1 |

| PARAMETER | DET. LIMIT | UNITS | 10 |
|---|---|---|---|
| BROMODICHLORMETHANE | 0.2 | UG/L | < 0.2 |
| BROMOFORM | 0.5 | UG/L | < 0.5 |
| BROMOMETHANE | 1.0 | UG/L | < 1.0 |
| CARBON TETRACHLORIDE | 0.2 | UG/L | < 0.2 |
| CHLOROBENZENE | 0.5 | UG/L | < 0.5 |
| CHLOROETHANE | 0.5 | UG/L | < 0.5 |
| CHLOROFORM | 0.5 | UG/L | < 0.5 |
| CHLOROMETHANE | 1.0 | UG/L | < 1.0 |
| DIBROMOCHLOROMETHANE | 0.2 | UG/L | < 0.2 |
| 1,2-DIBROMOETHANE (EDB) | 0.2 | UG/L | < 0.2 |
| 1,2-DICHLOROBENZENE | 0.5 | UG/L | < 0.5 |
| 1,3-DICHLOROBENZENE | 0.5 | UG/L | < 0.5 |
| 1,4-DICHLOROBENZENE | 0.5 | UG/L | < 0.5 |
| 1,1-DICHLOROETHANE | 0.3 | UG/L | < 0.3 |
| 1,2-DICHLOROETHANE (EDC) | 0.5 | UG/L | < 0.5 |
| 1,1-DICHLOROETHENE | 0.2 | UG/L | < 0.2 |
| cis-1,2-DICHLOROETHENE | 0.2 | UG/L | < 0.2 |
| trans-1,2-DICHLOROETHENE | 1.0 | UG/L | < 1.0 |
| 1,2-DICHLOROPROPANE | 0.2 | UG/L | < 0.2 |
| cis-1,3-DICHLOROPROPENE | 0.2 | UG/L | < 0.2 |
| trans-1,3-DICHLOROPROPENE | 0.2 | UG/L | < 0.2 |
| METHYLENE CHLORIDE | 2.0 | UG/L | < 2.0 |
| 1,1,2,2-TETRACHLOROETHANE | 0.5 | UG/L | < 0.5 |
| TETRACHLOROETHENE | 0.5 | UG/L | < 0.5 |
| 1,1,1-TRICHLOROETHANE | 1.0 | UG/L | < 1.0 |
| 1,1,2-TRICHLOROETHANE | 0.2 | UG/L | < 0.2 |
| TRICHLOROETHENE | 0.3 | UG/L | < 0.3 |
| TRICHLOROFLUOROMETHANE | 0.2 | UG/L | < 0.2 |
| VINYL CHLORIDE | 0.5 | UG/L | < 0.5 |

SURROGATE:
BROMOCHLOROMETHANE (%) 105
SURROGATE LIMITS ( 73 - 117 )

CHEMIST NOTES:
N/A

GAS CHROMOTOGRAPHY RESULTS
REAGENT BLANK

: EPA 8010
: 081996
: PUBLIC SERVICE COMPANY OF NM
: REMEDIATION
: PERSON STATION

AEN I.D. : 608331
DATE ANALYZED : 8/19/96
SAMPLE MATRIX : AQUEOUS

| | UNITS | |
|---|---|---|
| RMETHANE | UG/L | <0.2 |
| | UG/L | <0.5 |
| IE | UG/L | <1.0 |
| CHLORIDE | UG/L | <0.2 |
| NE | UG/L | <0.5 |
| E | UG/L | <0.5 |
| | UG/L | <0.5 |
| NE | UG/L | <1.0 |
| ROMETHANE | UG/L | <0.2 |
| HANE (EDB) | UG/L | <0.2 |
| ENZENE | UG/L | <0.5 |
| ENZENE | UG/L | <0.5 |
| ENZENE | UG/L | <0.5 |
| THANE | UG/L | <0.3 |
| THANE (EDC) | UG/L | <0.5 |
| THENE | UG/L | <0.2 |
| OETHENE | UG/L | <0.2 |
| DROETHENE | UG/L | <1.0 |
| ROPANE | UG/L | <0.2 |
| OPROPENE | UG/L | <0.2 |
| DROPROPENE | UG/L | <0.2 |
| LORIDE | UG/L | <2.0 |
| HLOROETHANE | UG/L | <0.5 |
| ETHENE | UG/L | <0.5 |
| OETHANE | UG/L | <1.0 |
| OETHANE | UG/L | <0.2 |
| IENE | UG/L | <0.3 |
| OROMETHANE | UG/L | <0.2 |
| E | UG/L | <0.5 |
| OMETHANE (%) | | 102 |
| MITS ( 73 - 117 ) | | |

S:

*American Environmental Network, Inc.*

GAS CHROMOTOGRAPHY RESULTS
REAGENT BLANK

| | | | |
|---|---|---|---|
| TEST | : EPA 8010 | | |
| BLANK I.D. | : 081596 | AEN I.D. | : 608331 |
| CLIENT | : PUBLIC SERVICE COMPANY OF NM | | |
| PROJECT # | : REMEDIATION | DATE ANALYZED | : 8/15/96 |
| PROJECT NAME | : PERSON STATION | SAMPLE MATRIX | : AQUEOUS |

| PARAMETER | UNITS | |
|---|---|---|
| BROMODICHLORMETHANE | UG/L | <0.2 |
| BROMOFORM | UG/L | <0.5 |
| BROMOMETHANE | UG/L | <1.0 |
| CARBON TETRACHLORIDE | UG/L | <0.2 |
| CHLOROBENZENE | UG/L | <0.5 |
| CHLOROETHANE | UG/L | <0.5 |
| CHLOROFORM | UG/L | <0.5 |
| CHLOROMETHANE | UG/L | <1.0 |
| DIBROMOCHLOROMETHANE | UG/L | <0.2 |
| 1,2-DIBROMOETHANE (EDB) | UG/L | <0.2 |
| 1,2-DICHLOROBENZENE | UG/L | <0.5 |
| 1,3-DICHLOROBENZENE | UG/L | <0.5 |
| 1,4-DICHLOROBENZENE | UG/L | <0.5 |
| 1,1-DICHLOROETHANE | UG/L | <0.3 |
| 1,2-DICHLOROETHANE (EDC) | UG/L | <0.5 |
| 1,1-DICHLOROETHENE | UG/L | <0.2 |
| cis-1,2-DICHLOROETHENE | UG/L | <0.2 |
| trans-1,2-DICHLOROETHENE | UG/L | <1.0 |
| 1,2-DICHLOROPROPANE | UG/L | <0.2 |
| cis-1,3-DICHLOROPROPENE | UG/L | <0.2 |
| trans-1,3-DICHLOROPROPENE | UG/L | <0.2 |
| METHYLENE CHLORIDE | UG/L | <2.0 |
| 1,1,2,2-TETRACHLOROETHANE | UG/L | <0.5 |
| TETRACHLOROETHENE | UG/L | <0.5 |
| 1,1,1-TRICHLOROETHANE | UG/L | <1.0 |
| 1,1,2-TRICHLOROETHANE | UG/L | <0.2 |
| TRICHLOROETHENE | UG/L | <0.3 |
| TRICHLOROFLUOROMETHANE | UG/L | <0.2 |
| VINYL CHLORIDE | UG/L | <0.5 |

SURROGATE:

| | | |
|---|---|---|
| BROMOCHLOROMETHANE (%) | | 103 |
| SURROGATE LIMITS | ( 73 - 117 ) | |

CHEMIST NOTES:
N/A

*n Environmental Network, Inc.*

GAS CHROMOTOGRAPHY RESULTS
REAGENT BLANK

: EPA 8010
: 082096
: PUBLIC SERVICE COMPANY OF NM
: REMEDIATION
: PERSON STATION

AEN I.D. : 608331
DATE ANALYZED : 8/20/96
SAMPLE MATRIX : AQUEOUS

| | UNITS | |
|---|---|---|
| RMETHANE | UG/L | <0.2 |
| | UG/L | <0.5 |
| E | UG/L | <1.0 |
| CHLORIDE | UG/L | <0.2 |
| NE | UG/L | <0.5 |
| E | UG/L | <0.5 |
| | UG/L | <0.5 |
| NE | UG/L | <1.0 |
| ROMETHANE | UG/L | <0.2 |
| HANE (EDB) | UG/L | <0.2 |
| ENZENE | UG/L | <0.5 |
| ENZENE | UG/L | <0.5 |
| ENZENE | UG/L | <0.5 |
| THANE | UG/L | <0.3 |
| THANE (EDC) | UG/L | <0.5 |
| THENE | UG/L | <0.2 |
| OETHENE | UG/L | <0.2 |
| ROETHENE | UG/L | <1.0 |
| ROPANE | UG/L | <0.2 |
| OPROPENE | UG/L | <0.2 |
| ROPROPENE | UG/L | <0.2 |
| LORIDE | UG/L | <2.0 |
| HLOROETHANE | UG/L | <0.5 |
| ETHENE | UG/L | <0.5 |
| OETHANE | UG/L | <1.0 |
| OETHANE | UG/L | <0.2 |
| ENE | UG/L | <0.3 |
| OROMETHANE | UG/L | <0.2 |
| E | UG/L | <0.5 |

| | | |
|---|---|---|
| METHANE (%) | | 97 |
| MITS | ( 73 - 117 ) | |

S:

*American Environmental Network, Inc.*

GAS CHROMOTOGRAPHY RESULTS
REAGENT BLANK

| | | | |
|---|---|---|---|
| TEST | : EPA 8010 | | |
| BLANK I.D. | : 082196 | AEN I.D. | : 608331 |
| CLIENT | : PUBLIC SERVICE COMPANY OF NM | | |
| PROJECT # | : REMEDIATION | DATE ANALYZED | : 8/21/96 |
| PROJECT NAME | : PERSON STATION | SAMPLE MATRIX | : AQUEOUS |

| PARAMETER | UNITS | |
|---|---|---|
| BROMODICHLORMETHANE | UG/L | <0.2 |
| BROMOFORM | UG/L | <0.5 |
| BROMOMETHANE | UG/L | <1.0 |
| CARBON TETRACHLORIDE | UG/L | <0.2 |
| CHLOROBENZENE | UG/L | <0.5 |
| CHLOROETHANE | UG/L | <0.5 |
| CHLOROFORM | UG/L | <0.5 |
| CHLOROMETHANE | UG/L | <1.0 |
| DIBROMOCHLOROMETHANE | UG/L | <0.2 |
| 1,2-DIBROMOETHANE (EDB) | UG/L | <0.2 |
| 1,2-DICHLOROBENZENE | UG/L | <0.5 |
| 1,3-DICHLOROBENZENE | UG/L | <0.5 |
| 1,4-DICHLOROBENZENE | UG/L | <0.5 |
| ,1-DICHLOROETHANE | UG/L | <0.3 |
| 1,2-DICHLOROETHANE (EDC) | UG/L | <0.5 |
| 1,1-DICHLOROETHENE | UG/L | <0.2 |
| cis-1,2-DICHLOROETHENE | UG/L | <0.2 |
| trans-1,2-DICHLOROETHENE | UG/L | <1.0 |
| 1,2-DICHLOROPROPANE | UG/L | <0.2 |
| cis-1,3-DICHLOROPROPENE | UG/L | <0.2 |
| trans-1,3-DICHLOROPROPENE | UG/L | <0.2 |
| METHYLENE CHLORIDE | UG/L | <2.0 |
| 1,1,2,2-TETRACHLOROETHANE | UG/L | <0.5 |
| TETRACHLOROETHENE | UG/L | <0.5 |
| 1,1,1-TRICHLOROETHANE | UG/L | <1.0 |
| 1,1,2-TRICHLOROETHANE | UG/L | <0.2 |
| TRICHLOROETHENE | UG/L | <0.3 |
| TRICHLOROFLUOROMETHANE | UG/L | <0.2 |
| VINYL CHLORIDE | UG/L | <0.5 |

SURROGATE:

| | | |
|---|---|---|
| BROMOCHLOROMETHANE (%) | | 97 |
| SURROGATE LIMITS | ( 73 - 117 ) | |

CHEMIST NOTES:
N/A

*Environmental Network, Inc.*

GAS CHROMOTOGRAPHY - QUALITY CONTROL
MSMSD

: PURGEABLE HALOCARBONS (EPA 8010)
: 608331-04
: PUBLIC SERVICE COMPANY OF NM
: REMEDIATION
: PERSON STATION

AEN I.D. : 608331

DATE ANALYZED : 8/20/96
SAMPLE MATRIX : AQUEOUS
UNITS : UG/L

| | SAMPLE RESULT | CONC SPIKE | SPIKED SAMPLE | % REC | DUP SPIKE | DUP % REC | RPD | REC LIMITS | RF LIM |
|---|---|---|---|---|---|---|---|---|---|
| NE | <0.5 | 10.0 | 10.4 | 104 | 9.8 | 98 | 6 | ( 87 - 124 ) | 2( |
| THENE | <0.2 | 10.0 | 10.4 | 104 | 9.3 | 93 | 11 | ( 44 - 99 ) | 2( |
| IENE | <0.3 | 10.0 | 10.8 | 108 | 10.0 | 100 | 8 | ( 89 - 127 ) | 2( |

S:

$$\frac{\text{(Spike Sample Result - Sample Result)}}{\text{Spike Concentration}} \times 100$$

$$\text{rcent Difference)} = \frac{\text{(Sample Result - Duplicate Result)}}{\text{Average Result}} \times 100$$

Analytical Technologies, Inc., Albuquerque, NM
San Diego • Phoenix • Seattle • Pensacola • Ft. Collins • Portland • Albuquerque

# CHAIN OF CUSTODY

DATE: 8-15-96 PAGE 1 OF 2

ATI LAB I.D. 60833 1

PLEASE FILL THIS FORM IN COMPLETELY. SHADED AREAS ARE FOR LAB USE ONLY.

PROJECT MANAGER: RON JOHNSON

COMPANY: PUBLIC SERVICE COMPANY OF NEW MEXICO
ADDRESS: ALVARADO SQUARE - 0408
ALBUQUERQUE, NM 87158
PHONE: (505) 241-~~2800~~ 2576
FAX: (505) 241-2340

BILL TO: SAME
COMPANY:
ADDRESS:
ATTN: ~~RON JOHNSON~~ Steve Anderson

## ANALYSIS REQUEST

| SAMPLE ID | DATE | TIME | MATRIX | LAB ID | Petroleum Hydrocarbons (418.1) | (MOD 8015) Gas/Diesel | Diesel/Gasoline/BTXE/MTBE (MOD 8015/8020) | BTXE/MTBE (8020) | | | Chlorinated Hydrocarbons (601/8010) | Aromatic Hydrocarbons (602/8020) | SDWA Volatiles (502.1/503.1), 502.2 Reg. & Unreg. | | | Pesticides/PCB (608/8080) | Herbicides (615/8150) | Base/Neutral/Acid Compounds GC/MS (625/8270) | Volatile Organics GC/MS (624/8240) | Polynuclear Aromatics (610/8310) | | | SDWA Primary Standards - Arizona | SDWA Secondary Standards - Arizona | SDWA Primary Standards - Federal | SDWA Secondary Standards - Federal | | | The 13 Priority Pollutant Metals | RCRA Metals by Total Digestion | RCRA Metals by TCLP (1311) | | NUMBER OF CONTAINERS |
|---|---|---|---|---|---|---|---|---|---|---|---|---|---|---|---|---|---|---|---|---|---|---|---|---|---|---|---|---|---|---|---|---|---|
| GTS-INFLUENT | 8-15-96 | 1156 | W | -01 | | | | | | | X | | | | | | | | | | | | | | | | | | | | | | 3 |
| GTS-AIR STRIPPER EFFLUENT EAST | | | ~~W~~ | | | | | | | | ~~X~~ | | | | | | | | | | | | | | | | | | | | | | |
| GTS-AIR STRIPPER EFFLUENT WEST | 8-15-96 | 1153 | W | -02 | | | | | | | X | | | | | | | | | | | | | | | | | | | | | | 3 |
| GTS GAC EFFLUENT EAST | | | ~~W~~ | | | | | | | | ~~X~~ | | | | | | | | | | | | | | | | | | | | | | |
| GTS GAC EFFLUENT WEST | 8-15-96 | 1140 | W | -03 | | | | | | | X | | | | | | | | | | | | | | | | | | | | | | 3 |
| UNM EAST RESERVOIR | 8-15-96 | 1215 | W | -04 | | | | | | | X | | | | | | | | | | | | | | | | | | | | | | 3 |
| UNM WEST RESERVOIR | 8-15-96 | 1225 | W | -05 | | | | | | | X | | | | | | | | | | | | | | | | | | | | | | 3 |
| | | | | | | | | | | | | | | | | | | | | | | | | | | | | | | | | | |
| TRIP BLANK | | | W | | | | | | | | X | | | | | | | | | | | | | | | | | | | | | | |

| PROJECT INFORMATION | | SAMPLE RECEIPT | |
|---|---|---|---|
| PROJ. NO.: | REMEDIATION | NO. CONTAINERS | 15 |
| PROJ. NAME: | PERSON STATION | CUSTODY SEALS | Y N / NA |
| P.O. NO.: | | RECEIVED INTACT | Y |
| SHIPPED VIA: | | RECEIVED COLD | Field |

PRIOR AUTHORIZATION IS REQUIRED FOR RUSH PROJECTS

(RUSH) ☐ 24hr ☐ 48hr ☐ 72hr ☐ 1 WEEK (NORMAL) ☑ 2 WEEK

Comments:

**PLEASE PROVIDE DATA ON DISKETTE AS WELL AS HARD COPY**

| SAMPLED & RELINQUISHED BY: 1. | RELINQUISHED BY: 2. | RELINQUISHED BY: 3. |
|---|---|---|
| Signature: [illegible] Time: 1423 | Signature: Time: | Signature: Time: |
| Printed Name: CHYCLAVATIV Date: 8-15-96 | Printed Name: Date: | Printed Name: Date: |
| Company: PNM Phone: 241-4744 | Company: | Company: |

| RECEIVED BY: 1. | RECEIVED BY: 2. | RECEIVED BY: (LAB) 3. |
|---|---|---|
| Signature: Time: | Signature: Time: | Signature: [illegible] Time: 1630 |
| Printed Name: Date: | Printed Name: Date: | Printed Name: John Caldwell Date: 8/15/96 |
| Company: | Company: | Analytical Technologies, Inc. |

Analytical Technologies, Inc., Albuquerque, NM
San Diego • Phoenix • Seattle • Pensacola • Ft. Collins • Portland • Albuquerque

# CHAIN OF CUSTODY

DATE: -96 PAGE 2 OF 2

ATI LAB I.D.: 608331

PLEASE FILL THIS FORM IN COMPLETELY. SHADED AREAS ARE FOR LAB USE ONLY.

PROJECT MANAGER: RON JOHNSON

COMPANY: PUBLIC SERVICE COMPANY OF NEW MEXICO
ADDRESS: ALVARADO SQUARE - 0408
ALBUQUERQUE, NM 87158
PHONE: (505) 241-~~2000~~ 2376
FAX: (505) 241-2340

BILL TO: SAME
COMPANY:
ADDRESS:
ATTN: ~~RON JOHNSON~~ Steve Anderson

## ANALYSIS REQUEST

| SAMPLE ID | DATE | TIME | MATRIX | LAB ID | Petroleum Hydrocarbons (418.1) | (MOD 8015) Gas/Diesel | Diesel/Gasoline/BTXE/MTBE (MOD 8015/8020) | BTXE/MTBE (8020) | | | Chlorinated Hydrocarbons (601/8010) | Aromatic Hydrocarbons (602/8020) | SDWA Volatiles (502.1/503.1), 502.2 Reg. & Unreg. | | | Pesticides/PCB (608/8080) | Herbicides (615/8150) | Base/Neutral/Acid Compounds GC/MS (625/8270) | Volatile Organics GC/MS (624/8240) | Polynuclear Aromatics (610/8310) | | | SDWA Primary Standards - Arizona | SDWA Secondary Standards - Arizona | SDWA Primary Standards - Federal | SDWA Secondary Standards - Federal | | | The 13 Priority Pollutant Metals | RCRA Metals by Total Digestion | RCRA Metals by TCLP (1311) | | NUMBER OF CONTAINERS |
|---|---|---|---|---|---|---|---|---|---|---|---|---|---|---|---|---|---|---|---|---|---|---|---|---|---|---|---|---|---|---|---|---|---|
| VEW INFLUENT | 8-15-96 | 1158 | W | -06 | | | | | | | X | | | | | | | | | | | | | | | | | | | | | | 3 |
| PSMW-16 INFLUENT | 8-15-96 | 1200 | W | -07 | | | | | | | X | | | | | | | | | | | | | | | | | | | | | | 3 |
| EW-1 INFLUENT | 8-15-96 | 1159 | W | -08 | | | | | | | X | | | | | | | | | | | | | | | | | | | | | | 3 |
| PSMW-24,25,26 INFLUENT | 8-15-96 | 1202 | W | -09 | | | | | | | X | | | | | | | | | | | | | | | | | | | | | | 3 |
| | | | | | | | | | | | | | | | | | | | | | | | | | | | | | | | | | |
| | | | | | | | | | | | | | | | | | | | | | | | | | | | | | | | | | |
| | | | | | | | | | | | | | | | | | | | | | | | | | | | | | | | | | |
| | | | | | | | | | | | | | | | | | | | | | | | | | | | | | | | | | |
| TRIP BLANK | 8/15 | 600 | W | -10 | | | | | | | X | | | | | | | | | | | | | | | | | | | | | | 1 |

| PROJECT INFORMATION | | SAMPLE RECEIPT | |
|---|---|---|---|
| PROJ. NO.: | REMEDIATION | NO. CONTAINERS | 12 |
| PROJ. NAME: | PERSON STATION | CUSTODY SEALS | Y / N / NA |
| P.O. NO.: | | RECEIVED INTACT | Y |
| SHIPPED VIA: | | RECEIVED COLD | field |

PRIOR AUTHORIZATION IS REQUIRED FOR RUSH PROJECTS

(RUSH) ☐ 24hr ☐ 48hr ☐ 72hr ☐ 1 WEEK (NORMAL) ☒ 2 WEEK

Comments:

**PLEASE PROVIDE DATA ON DISKETTE AS WELL AS HARD COPY**

| SAMPLED & RELINQUISHED BY: 1. | RELINQUISHED BY: 2. | RELINQUISHED BY: 3. |
|---|---|---|
| Signature: Time: 1423 | Signature: Time: | Signature: Time: |
| Printed Name: CHUCK Avalos Date: 8-15-96 | Printed Name: Date: | Printed Name: Date: |
| Company: PNM Phone: 241-4744 | Company: | Company: |

| RECEIVED BY: 1. | RECEIVED BY: 2. | RECEIVED BY: (LAB) 3. |
|---|---|---|
| Signature: Time: | Signature: Time: | Signature: Time: 1630 |
| Printed Name: Date: | Printed Name: Date: | Printed Name: Date: 8/16/96 |
| Company: | Company: | Analytical Technologies, Inc. |

# American Environmental Network, Inc.

AEN I.D. 609338

**September 27, 1996**

PUBLIC SERVICE COMPANY
ALVARADO SQUARE-MSO408
ALBUQUERQUE, NM 87158

Project Name PERSON STATION
Project Number REMEDIATION

Attention: RON JOHNSON

On 9/18/96 American Environmental Network (NM), Inc. (ADHS License No. AZ0015), received a request to analyze **aqueous** samples. The samples were analyzed with EPA methodology or equivalent methods. The results of these analyses and the quality control data, which follow each set of analyses, are enclosed.

If you have any questions or comments, please do not hesitate to contact us at (505)344-3777.

Kimberly D. McNeill
Project Manager

H. Mitchell Rubenstein, Ph. D.
General Manager

MR: mt

Enclosure

*nvironmental Network, Inc.*

| | | | |
|---|---|---|---|
| : PUBLIC SERVICE COMPANY | | AEN I.D. | : 609338 |
| : REMEDIATION | | DATE RECEIVED | : 9/18/96 |
| : PERSON STATION | | REPORT DATE | : 9/27/96 |

| CLIENT DESCRIPTION | MATRIX | DATE COLLECTED |
|---|---|---|
| VEW INFLUENT | AQUEOUS | 9/18/96 |
| PSMW-16 INFLUENT | AQUEOUS | 9/18/96 |
| EW-1 INFLUENT | AQUEOUS | 9/18/96 |
| PSMW-24,25,26 INFLUENT | AQUEOUS | 9/18/96 |
| GTS-INFLUENT | AQUEOUS | 9/18/96 |
| GTS-Air Stripper Effluent East | AQUEOUS | 9/18/96 |
| GTS GAC EFFLUENT EAST | AQUEOUS | 9/18/96 |
| UNM EAST RESERVOIR | AQUEOUS | 9/18/96 |
| UNM WEST RESERVOIR | AQUEOUS | 9/18/96 |
| TRIP BLANK | AQUEOUS | 9/18/96 |

*American Environmental Network, Inc.*

GAS CHROMOTOGRAPHY RESULTS

TEST : PURGEABLE HALOCARBONS (EPA 8010)
CLIENT : PUBLIC SERVICE COMPANY
PROJECT # : REMEDIATION
PROJECT NAME : PERSON STATION

AEN I.D.: 609338

| SAMPLE ID. # | CLIENT I.D. | MATRIX | DATE SAMPLED | DATE EXTRACTED | DATE ANALYZED | DIL. FACTOR |
|---|---|---|---|---|---|---|
| 01 | VEW INFLUENT | AQUEOUS | 9/18/96 | NA | 9/19/96 | 1 |
| 02 | PSMW-16 INFLUENT | AQUEOUS | 9/18/96 | NA | 9/19/96 | 1 |
| 03 | EW-1 INFLUENT | AQUEOUS | 9/18/96 | NA | 9/25/96 | 1 |

| PARAMETER | DET. LIMIT | UNITS | 01 | 02 | 03 |
|---|---|---|---|---|---|
| BROMODICHLORMETHANE | 0.2 | UG/L | < 0.2 | < 0.2 | < 0.2 |
| **BROMOFORM** | 0.5 | UG/L | < 0.5 | **0.8** | < 0.5 |
| BROMOMETHANE | 1.0 | UG/L | < 1.0 | < 1.0 | < 1.0 |
| CARBON TETRACHLORIDE | 0.2 | UG/L | < 0.2 | < 0.2 | < 0.2 |
| CHLOROBENZENE | 0.5 | UG/L | < 0.5 | < 0.5 | < 0.5 |
| CHLOROETHANE | 0.5 | UG/L | < 0.5 | < 0.5 | < 0.5 |
| **CHLOROFORM** | 0.5 | UG/L | < 0.5 | **1.6** | < 0.5 |
| CHLOROMETHANE | 1.0 | UG/L | < 1.0 D(1) | < 1.0 | < 1.0 |
| DIBROMOCHLOROMETHANE | 0.2 | UG/L | < 0.2 | < 0.2 | < 0.2 |
| 1,2-DIBROMOETHANE (EDB) | 0.2 | UG/L | < 0.2 | < 0.2 | < 0.2 |
| 1,2-DICHLOROBENZENE | 0.5 | UG/L | < 0.5 | < 0.5 | < 0.5 |
| 1,3-DICHLOROBENZENE | 0.5 | UG/L | < 0.5 | < 0.5 | < 0.5 |
| 1,4-DICHLOROBENZENE | 0.5 | UG/L | < 0.5 | < 0.5 | < 0.5 |
| **1,1-DICHLOROETHANE** | 0.3 | UG/L | **3.0** | **0.9** | **1.4** |
| [illegible]CHLOROETHANE (EDC) | 0.5 | UG/L | < 0.5 | < 0.5 | < 0.5 |
| **1,[illegible]ICHLOROETHENE** | 0.2 | UG/L | **2.1** | **43 D(10)** | **7.8** |
| cis-1,2-DICHLOROETHENE | 0.2 | UG/L | < 0.2 | < 0.2 | < 0.2 |
| trans-1,2-DICHLOROETHENE | 1.0 | UG/L | < 1.0 | < 1.0 | < 1.0 |
| 1,2-DICHLOROPROPANE | 0.2 | UG/L | < 0.2 | < 0.2 | < 0.2 |
| cis-1,3-DICHLOROPROPENE | 0.2 | UG/L | < 0.2 | < 0.2 | < 0.2 |
| trans-1,3-DICHLOROPROPENE | 0.2 | UG/L | < 0.2 | < 0.2 | < 0.2 |
| METHYLENE CHLORIDE | 2.0 | UG/L | < 2.0 | < 2.0 | < 2.0 |
| 1,1,2,2-TETRACHLOROETHANE | 0.5 | UG/L | < 0.5 | < 0.5 | < 0.5 |
| **TETRACHLOROETHENE** | 0.5 | UG/L | **3.1** | **110 D(10)** | **37 D(10)** |
| **1,1,1-TRICHLOROETHANE** | 1.0 | UG/L | **7.6** | **4.3** | **2.6** |
| 1,1,2-TRICHLOROETHANE | 0.2 | UG/L | < 0.2 | < 0.2 | < 0.2 |
| **TRICHLOROETHENE** | 0.3 | UG/L | < 0.3 | **0.3** | < 0.3 |
| TRICHLOROFLUOROMETHANE | 0.2 | UG/L | < 0.2 | < 0.2 | < 0.2 |
| VINYL CHLORIDE | 0.5 | UG/L | < 0.5 | < 0.5 | < 0.5 |
| SURROGATE: | | | | | |
| BROMOCHLOROMETHANE (%) | | | 101 | 96 | 89 |
| SURROGATE LIMITS | ( 73 - 117 ) | | | | |

CHEMIST NOTES:
D(10)=DILUTED 10X, ANALYZED 9/24/96.
D(1)=DILUTED 1X, ANALYZED 9/25/96.

*nvironmental Network, Inc.*

GAS CHROMOTOGRAPHY RESULTS

: PURGEABLE HALOCARBONS (EPA 8010)
: PUBLIC SERVICE COMPANY
: REMEDIATION
: PERSON STATION

AEN I.D.: 609338

| I.D. | MATRIX | DATE SAMPLED | DATE EXTRACTED | DATE ANALYZED | DIL. FACTOR |
|---|---|---|---|---|---|
| 24,25,26 INFLUENT | AQUEOUS | 9/18/96 | NA | 9/19/96 | 1 |
| FLUENT | AQUEOUS | 9/18/96 | NA | 9/19/96 | 1 |
| R STRIPPER EFFLUENT EAST | AQUEOUS | 9/18/96 | NA | 9/19/96 | 1 |

| | DET. LIMIT | UNITS | 04 | 05 | 06 |
|---|---|---|---|---|---|
| THANE | 0.2 | UG/L | 0.3 | < 0.2 | < 0.2 |
| | 0.5 | UG/L | < 0.5 | < 0.5 | < 0.5 |
| | 1.0 | UG/L | < 1.0 | < 1.0 | < 1.0 |
| ORIDE | 0.2 | UG/L | < 0.2 | < 0.2 | < 0.2 |
| | 0.5 | UG/L | < 0.5 | < 0.5 | < 0.5 |
| | 0.5 | UG/L | < 0.5 | < 0.5 | < 0.5 |
| | 0.5 | UG/L | 2.0 | 1.0 | < 0.5 |
| | 1.0 | UG/L | < 1.0 | < 1.0 | 1.1 |
| ETHANE | 0.2 | UG/L | < 0.2 | < 0.2 | < 0.2 |
| E (EDB) | 0.2 | UG/L | < 0.2 | < 0.2 | < 0.2 |
| ENE | 0.5 | UG/L | < 0.5 | < 0.5 | < 0.5 |
| ENE | 0.5 | UG/L | < 0.5 | < 0.5 | < 0.5 |
| ENE | 0.5 | UG/L | < 0.5 | < 0.5 | < 0.5 |
| NE | 0.3 | UG/L | 0.7 | 1.0 | < 0.3 |
| NE (EDC) | 0.5 | UG/L | < 0.5 | < 0.5 | < 0.5 |
| NE | 0.2 | UG/L | 44 D(10) | 17 D(10) | < 0.2 |
| HENE | 0.2 | UG/L | 0.2 | < 0.2 | < 0.2 |
| THENE | 1.0 | UG/L | < 1.0 | < 1.0 | < 1.0 |
| ANE | 0.2 | UG/L | < 0.2 | < 0.2 | < 0.2 |
| OPENE | 0.2 | UG/L | < 0.2 | < 0.2 | < 0.2 |
| PROPENE | 0.2 | UG/L | < 0.2 | < 0.2 | < 0.2 |
| IDE | 2.0 | UG/L | < 2.0 | < 2.0 | < 2.0 |
| ROETHANE | 0.5 | UG/L | < 0.5 | < 0.5 | < 0.5 |
| ENE | 0.5 | UG/L | 58 D(10) | 40 D(10) | < 0.5 |
| HANE | 1.0 | UG/L | 1.1 | 2.6 | < 1.0 |
| HANE | 0.2 | UG/L | < 0.2 | < 0.2 | < 0.2 |
| | 0.3 | UG/L | < 0.3 | < 0.3 | < 0.3 |
| OMETHANE | 0.2 | UG/L | < 0.2 | < 0.2 | < 0.2 |
| | 0.5 | UG/L | < 0.5 | < 0.5 | < 0.5 |
| THANE (%) | (73 - 117) | | 104 | 103 | 99 |

K, ANALYZED 9/25/96.

*American Environmental Network, Inc.*

GAS CHROMOTOGRAPHY RESULTS

TEST : PURGEABLE HALOCARBONS (EPA 8010)
CLIENT : PUBLIC SERVICE COMPANY AEN I.D.: 609338
PROJECT # : REMEDIATION
PROJECT NAME : PERSON STATION

| SAMPLE ID. # | CLIENT I.D. | MATRIX | DATE SAMPLED | DATE EXTRACTED | DATE ANALYZED | DIL. FACTOR |
|---|---|---|---|---|---|---|
| 07 | GTS GAC EFFLUENT EAST | AQUEOUS | 9/18/96 | NA | 9/25/96 | 1 |
| 08 | UNM EAST RESERVOIR | AQUEOUS | 9/18/96 | NA | 9/20/96 | 1 |
| 09 | UNM WEST RESERVOIR | AQUEOUS | 9/18/96 | NA | 9/20/96 | 1 |

| PARAMETER | DET. LIMIT | UNITS | 07 | 08 | 09 |
|---|---|---|---|---|---|
| BROMODICHLORMETHANE | 0.2 | UG/L | < 0.2 | < 0.2 | < 0.2 |
| BROMOFORM | 0.5 | UG/L | < 0.5 | < 0.5 | < 0.5 |
| BROMOMETHANE | 1.0 | UG/L | < 1.0 | < 1.0 | < 1.0 |
| CARBON TETRACHLORIDE | 0.2 | UG/L | < 0.2 | < 0.2 | < 0.2 |
| CHLOROBENZENE | 0.5 | UG/L | < 0.5 | < 0.5 | < 0.5 |
| CHLOROETHANE | 0.5 | UG/L | < 0.5 | < 0.5 | < 0.5 |
| CHLOROFORM | 0.5 | UG/L | < 0.5 | < 0.5 | < 0.5 |
| CHLOROMETHANE | 1.0 | UG/L | < 1.0 | < 1.0 | < 1.0 |
| DIBROMOCHLOROMETHANE | 0.2 | UG/L | < 0.2 | < 0.2 | < 0.2 |
| 1,2-DIBROMOETHANE (EDB) | 0.2 | UG/L | < 0.2 | < 0.2 | < 0.2 |
| 1,2-DICHLOROBENZENE | 0.5 | UG/L | < 0.5 | < 0.5 | < 0.5 |
| 1,3-DICHLOROBENZENE | 0.5 | UG/L | < 0.5 | < 0.5 | < 0.5 |
| 1,4-DICHLOROBENZENE | 0.5 | UG/L | < 0.5 | < 0.5 | < 0.5 |
| 1 1-DICHLOROETHANE | 0.3 | UG/L | < 0.3 | < 0.3 | < 0.3 |
| DICHLOROETHANE (EDC) | 0.5 | UG/L | < 0.5 | < 0.5 | < 0.5 |
| -DICHLOROETHENE | 0.2 | UG/L | < 0.2 | < 0.2 | < 0.2 |
| cis-1,2-DICHLOROETHENE | 0.2 | UG/L | < 0.2 | < 0.2 | < 0.2 |
| trans-1,2-DICHLOROETHENE | 1.0 | UG/L | < 1.0 | < 1.0 | < 1.0 |
| 1,2-DICHLOROPROPANE | 0.2 | UG/L | < 0.2 | < 0.2 | < 0.2 |
| cis-1,3-DICHLOROPROPENE | 0.2 | UG/L | < 0.2 | < 0.2 | < 0.2 |
| trans-1,3-DICHLOROPROPENE | 0.2 | UG/L | < 0.2 | < 0.2 | < 0.2 |
| METHYLENE CHLORIDE | 2.0 | UG/L | < 2.0 | < 2.0 | < 2.0 |
| 1,1,2,2-TETRACHLOROETHANE | 0.5 | UG/L | < 0.5 | < 0.5 | < 0.5 |
| TETRACHLOROETHENE | 0.5 | UG/L | < 0.5 | < 0.5 | < 0.5 |
| 1,1,1-TRICHLOROETHANE | 1.0 | UG/L | < 1.0 | < 1.0 | < 1.0 |
| 1,1,2-TRICHLOROETHANE | 0.2 | UG/L | < 0.2 | < 0.2 | < 0.2 |
| TRICHLOROETHENE | 0.3 | UG/L | < 0.3 | < 0.3 | < 0.3 |
| TRICHLOROFLUOROMETHANE | 0.2 | UG/L | < 0.2 | < 0.2 | < 0.2 |
| VINYL CHLORIDE | 0.5 | UG/L | < 0.5 | < 0.5 | < 0.5 |
| SURROGATE: | | | | | |
| BROMOCHLOROMETHANE (%) | | | 92 | 96 | 103 |
| SURROGATE LIMITS | (73 - 117) | | | | |

CHEMIST NOTES:
N/A

*Environmental Network, Inc.*

GAS CHROMOTOGRAPHY RESULTS

: PURGEABLE HALOCARBONS (EPA 8010)
: PUBLIC SERVICE COMPANY
: REMEDIATION
: PERSON STATION

AEN I.D.: 609338

| T I.D. | MATRIX | DATE SAMPLED | DATE EXTRACTED | DATE ANALYZED | DIL. FACTOR |
|---|---|---|---|---|---|
| BLANK | AQUEOUS | 9/18/96 | NA | 9/20/96 | 1 |

| | DET. LIMIT | UNITS | 10 |
|---|---|---|---|
| ETHANE | 0.2 | UG/L | < 0.2 |
| | 0.5 | UG/L | < 0.5 |
| | 1.0 | UG/L | < 1.0 |
| LORIDE | 0.2 | UG/L | < 0.2 |
| | 0.5 | UG/L | < 0.5 |
| | 0.5 | UG/L | < 0.5 |
| | 0.5 | UG/L | < 0.5 |
| | 1.0 | UG/L | 1.3 |
| METHANE | 0.2 | UG/L | < 0.2 |
| NE (EDB) | 0.2 | UG/L | < 0.2 |
| ZENE | 0.5 | UG/L | < 0.5 |
| ZENE | 0.5 | UG/L | < 0.5 |
| ZENE | 0.5 | UG/L | < 0.5 |
| ANE | 0.3 | UG/L | < 0.3 |
| ANE (EDC) | 0.5 | UG/L | < 0.5 |
| ENE | 0.2 | UG/L | < 0.2 |
| THENE | 0.2 | UG/L | < 0.2 |
| DETHENE | 1.0 | UG/L | < 1.0 |
| PANE | 0.2 | UG/L | < 0.2 |
| ROPENE | 0.2 | UG/L | < 0.2 |
| DPROPENE | 0.2 | UG/L | < 0.2 |
| RIDE | 2.0 | UG/L | < 2.0 |
| DROETHANE | 0.5 | UG/L | < 0.5 |
| HENE | 0.5 | UG/L | < 0.5 |
| THANE | 1.0 | UG/L | < 1.0 |
| THANE | 0.2 | UG/L | < 0.2 |
| E | 0.3 | UG/L | < 0.3 |
| OMETHANE | 0.2 | UG/L | < 0.2 |
| | 0.5 | UG/L | < 0.5 |
| ETHANE (%) | | | 104 |
| S | ( 73 - 117 ) | | |

s also found in the refrigerator blank for 9/18/96.

*American Environmental Network, Inc.*

GAS CHROMOTOGRAPHY RESULTS
REAGENT BLANK

| | | | |
|---|---|---|---|
| TEST | : EPA 8010 | | |
| BLANK I.D. | : 091996 | AEN I.D. | : 609338 |
| CLIENT | : PUBLIC SERVICE COMPANY | DATE EXTRACTED | : NA |
| PROJECT # | : REMEDIATION | DATE ANALYZED | : 9/19/96 |
| PROJECT NAME | : PERSON STATION | SAMPLE MATRIX | : AQUEOUS |

| PARAMETER | UNITS | |
|---|---|---|
| BROMODICHLORMETHANE | UG/L | <0.2 |
| BROMOFORM | UG/L | <0.5 |
| BROMOMETHANE | UG/L | <1.0 |
| CARBON TETRACHLORIDE | UG/L | <0.2 |
| CHLOROBENZENE | UG/L | <0.5 |
| CHLOROETHANE | UG/L | <0.5 |
| CHLOROFORM | UG/L | <0.5 |
| CHLOROMETHANE | UG/L | <1.0 |
| DIBROMOCHLOROMETHANE | UG/L | <0.2 |
| 1,2-DIBROMOETHANE (EDB) | UG/L | <0.2 |
| 1,2-DICHLOROBENZENE | UG/L | <0.5 |
| 1,3-DICHLOROBENZENE | UG/L | <0.5 |
| 1,4-DICHLOROBENZENE | UG/L | <0.5 |
| 1,1-DICHLOROETHANE | UG/L | <0.3 |
| 1,2-DICHLOROETHANE (EDC) | UG/L | <0.5 |
| 1,1-DICHLOROETHENE | UG/L | <0.2 |
| cis-1,2-DICHLOROETHENE | UG/L | <0.2 |
| trans-1,2-DICHLOROETHENE | UG/L | <1.0 |
| 1,2-DICHLOROPROPANE | UG/L | <0.2 |
| cis-1,3-DICHLOROPROPENE | UG/L | <0.2 |
| trans-1,3-DICHLOROPROPENE | UG/L | <0.2 |
| METHYLENE CHLORIDE | UG/L | <2.0 |
| 1,1,2,2-TETRACHLOROETHANE | UG/L | <0.5 |
| TETRACHLOROETHENE | UG/L | <0.5 |
| 1,1,1-TRICHLOROETHANE | UG/L | <1.0 |
| 1,1,2-TRICHLOROETHANE | UG/L | <0.2 |
| TRICHLOROETHENE | UG/L | <0.3 |
| TRICHLOROFLUOROMETHANE | UG/L | <0.2 |
| VINYL CHLORIDE | UG/L | <0.5 |

SURROGATE:

| | | |
|---|---|---|
| BROMOCHLOROMETHANE (%) | | 102 |
| SURROGATE LIMITS | ( 73 - 117 ) | |

CHEMIST NOTES:
N/A

*nvironmental Network, Inc.*

GAS CHROMOTOGRAPHY RESULTS
REAGENT BLANK

| | | | |
|---|---|---|---|
| : EPA 8010 | | | |
| : 092496 | | AEN I.D. | : 609338 |
| : PUBLIC SERVICE COMPANY | | DATE EXTRACTED | : NA |
| : REMEDIATION | | DATE ANALYZED | : 9/24/96 |
| : PERSON STATION | | SAMPLE MATRIX | : AQUEOUS |

| | UNITS | |
|---|---|---|
| HANE | UG/L | <0.2 |
| | UG/L | <0.5 |
| | UG/L | <1.0 |
| RIDE | UG/L | <0.2 |
| | UG/L | <0.5 |
| | UG/L | <0.5 |
| | UG/L | <0.5 |
| | UG/L | <1.0 |
| THANE | UG/L | <0.2 |
| (EDB) | UG/L | <0.2 |
| NE | UG/L | <0.5 |
| NE | UG/L | <0.5 |
| NE | UG/L | <0.5 |
| E | UG/L | <0.3 |
| E (EDC) | UG/L | <0.5 |
| E | UG/L | <0.2 |
| ENE | UG/L | <0.2 |
| HENE | UG/L | <1.0 |
| NE | UG/L | <0.2 |
| PENE | UG/L | <0.2 |
| ROPENE | UG/L | <0.2 |
| E | UG/L | <2.0 |
| ETHANE | UG/L | <0.5 |
| E | UG/L | <0.5 |
| ANE | UG/L | <1.0 |
| ANE | UG/L | <0.2 |
| | UG/L | <0.3 |
| ETHANE | UG/L | <0.2 |
| | UG/L | <0.5 |
| ANE (%) | | 104 |
| ( 73 - 117 ) | | |

*American Environmental Network, Inc.*

GAS CHROMOTOGRAPHY RESULTS
REAGENT BLANK

| | | | |
|---|---|---|---|
| TEST | : EPA 8010 | | |
| BLANK I.D. | : 092596 | AEN I.D. | : 609338 |
| CLIENT | : PUBLIC SERVICE COMPANY | DATE EXTRACTED | : NA |
| PROJECT # | : REMEDIATION | DATE ANALYZED | : 9/25/96 |
| PROJECT NAME | : PERSON STATION | SAMPLE MATRIX | : AQUEOUS |

| PARAMETER | UNITS | |
|---|---|---|
| BROMODICHLORMETHANE | UG/L | <0.2 |
| BROMOFORM | UG/L | <0.5 |
| BROMOMETHANE | UG/L | <1.0 |
| CARBON TETRACHLORIDE | UG/L | <0.2 |
| CHLOROBENZENE | UG/L | <0.5 |
| CHLOROETHANE | UG/L | <0.5 |
| CHLOROFORM | UG/L | <0.5 |
| CHLOROMETHANE | UG/L | <1.0 |
| DIBROMOCHLOROMETHANE | UG/L | <0.2 |
| 1,2-DIBROMOETHANE (EDB) | UG/L | <0.2 |
| 1,2-DICHLOROBENZENE | UG/L | <0.5 |
| 1,3-DICHLOROBENZENE | UG/L | <0.5 |
| 1,4-DICHLOROBENZENE | UG/L | <0.5 |
| 1[illegible]CHLOROETHANE | UG/L | <0.3 |
| 1,[illegible]CHLOROETHANE (EDC) | UG/L | <0.5 |
| 1,1-DICHLOROETHENE | UG/L | <0.2 |
| cis-1,2-DICHLOROETHENE | UG/L | <0.2 |
| trans-1,2-DICHLOROETHENE | UG/L | <1.0 |
| 1,2-DICHLOROPROPANE | UG/L | <0.2 |
| cis-1,3-DICHLOROPROPENE | UG/L | <0.2 |
| trans-1,3-DICHLOROPROPENE | UG/L | <0.2 |
| METHYLENE CHLORIDE | UG/L | <2.0 |
| 1,1,2,2-TETRACHLOROETHANE | UG/L | <0.5 |
| TETRACHLOROETHENE | UG/L | <0.5 |
| 1,1,1-TRICHLOROETHANE | UG/L | <1.0 |
| 1,1,2-TRICHLOROETHANE | UG/L | <0.2 |
| TRICHLOROETHENE | UG/L | <0.3 |
| TRICHLOROFLUOROMETHANE | UG/L | <0.2 |
| VINYL CHLORIDE | UG/L | <0.5 |

SURROGATE:
BROMOCHLOROMETHANE (%) 92
SURROGATE LIMITS ( 73 - 117 )

CHEMIST NOTES:
N/A

*nvironmental Network, Inc.*

GAS CHROMOTOGRAPHY - QUALITY CONTROL
MSMSD

: PURGEABLE HALOCARBONS (EPA 8010)
: 609335-01
: PUBLIC SERVICE COMPANY
: REMEDIATION
: PERSON STATION

AEN I.D. : 609338
DATE EXRACTED : NA
DATE ANALYZED : 9/19/96
SAMPLE MATRIX : AQUEOUS
UNITS : UG/L

| | SAMPLE RESULT | CONC SPIKE | SPIKED SAMPLE | % REC | DUP SPIKE | DUP % REC | RPD | REC LIMITS | RPD LIMITS |
|---|---|---|---|---|---|---|---|---|---|
| | <0.5 | 10.0 | 9.8 | 98 | 11.5 | 115 | 16 | ( 87 - 124 ) | 20 |
| NE | <0.2 | 10.0 | 8.6 | 86 | 9.3 | 93 | 8 | ( 44 - 99 ) | 20 |
| | <0.3 | 10.0 | 10.0 | 100 | 11.4 | 114 | 13 | ( 89 - 127 ) | 20 |

$$\frac{\text{e Sample Result - Sample Result)}}{\text{Spike Concentration}} \times 100$$

$$\text{Difference)} = \frac{\text{(Sample Result - Duplicate Result)}}{\text{Average Result}} \times 100$$

# APPENDIX C

# GROUNDWATER TREATMENT PLANT OPERATIONS AND MAINTENANCE MANUAL

# Groundwater Treatment Plant Operations and Maintenance Manual Person Generating Station Albuquerque, New Mexico

*Prepared for*

**Public Service Company of New Mexico**

*August 1996*

PARSONS ENGINEERING SCIENCE, INC.
1700 Broadway, Suite 900 • Denver, Colorado 80290

# TABLE OF CONTENTS

## TABLE OF CONTENTS (CONTINUED)



## LIST OF TABLES



## LIST OF FIGURES

# LIST OF ACRONYMS

| | |
|---|---|
| 1,1,1-TCA | Tetrachloroethane |
| 1,1-DCE | 1,1-Dichloroethene |
| cfm | cubic feet per minute |
| COC | Chain-of-custody |
| GAC | Granulated activated carbon |
| gpm | Gallons per minute |
| GTS | Groundwater treatment system |
| GWTP | Groundwater Treatment Plant |
| HDPE | High density polyethylene |
| HOA | Hands-off auto |
| HP | Horsepower |
| $H_2SO_4$ | Sulfuric acid |
| MCB | Main circuit breaker |
| MCC | Motor control center |
| ML | Milliliter |
| ml/min | milliliters per minute |
| NMED | New Mexico Environmental Department |
| O&M | Operations and Maintenance |
| P&ID | Piping and Instrumentation Diagram |
| PCE | Tetrachloroethene |
| PEL | Permissible exposure limit |
| PID | Photoionization detector |
| PNM | Public Service Company of New Mexico |
| PPE | Personal protective equipment |
| ppm | parts per million |
| psi | Pounds per square inch |
| PVC | Polyvinyl chloride |
| SVE | Soil vapor extraction |
| UNM | University of New Mexico |
| VOC | Volatile organic compounds |

## 1.0 INTRODUCTION

This operations and maintenance (O&M) manual describes the procedures associated with operating, monitoring, and maintaining the groundwater treatment plant (GWTP) system at Public Service Company of New Mexico's (PNM's) Person Generating Station, in Albuquerque, New Mexico.

The groundwater capture/pumping component of the GWTP is designed to prevent the further migration of a plume of groundwater contaminated with volatile organic compounds (VOCs). The VOCs of interest include tetrachloroethene (PCE), 1,1-dichloroethene (1,1-DCE); and 1,1,1-trichloroethane (1,1,1-TCA). In order to capture the contaminated groundwater plume, the recovery/extraction wells have been located such that the capture zones are within the radius of influence for each particular well.

The recovery, and subsequent treatment, of the VOC-contaminated groundwater plume has been approached in a two (2) phased manner. The first phase (Phase I) provided for the treatment of only two recovery/extraction wells, identified as the RCRA Cap and PSMW-16 wells. This treatment involved a single treatment process involving air stripping with granulated activated carbon (GAC) polishing [in the event that less than the desired air stripping efficiency was realized]. The operating, monitoring, and maintenance manual (O&M Manual) of the Phase I system (Groundwater Treatment Plant, Operations and Maintenance Manual, Person Generating Station, Albuquerque, New Mexico; February 1995) was addressed in revision zero (Rev. 0) of this manual.

This O&M manual is issued as revision 1 (Rev. 1) and incorporates the addition of four (4) additional recovery/extraction wells and a second (parallel) treatment train (Phase 2). This revision also includes modifications applied to; the original (Phase I) design and the Phase II design. These modifications include flow and pH controls.

Flow control has been incorporated to minimize the cycling (i.e. on/off) of the treatment plant transfer pumps. These flow controls effectively "level" the operation of the transfer pumps based upon the level in the respective surge systems (i.e. the stripper sumps and the Surge Tank) reducing the on/off cycling of the respective pumps.

The incorporation of pH control is a result of the operational problems encountered during start-up of the Phase I system. Due to the carbonate chemistry of the contaminated groundwater; pH elevation within the air strippers (due to the off-gassing of carbon dioxide) caused a resultant precipitation of calcium carbonate within the GAC unit provided for Phase I. The precipitation of calcium carbonate effectively "fouled" (plugged) the upper portions of the GAC units thereby increasing the pressure, to the point of exceeding the pressure rating, within the GAC unit.

The control of pH (pH lowering) is accomplished by the addition of concentrated sulfuric acid. Sulfuric acid is added to maintain the pH of the air stripper effluent within the range of 6.3 to 6.8. Maintaining this pH ensures that the water chemistry of the treated groundwater is such that the precipitation of insolubles (at moderate pH) is minimized (if not eliminated) thereby increasing the operational life of the GAC unit(s). This O&M manual was prepared for Public Service Company of New Mexico

to provide procedures to operate, monitor, and maintain the GWTP system at Person Generating Station, in Albuquerque, New Mexico.

O&M manual is organized into seven sections including this introduction. s following this introduction include:

escription of the GWTP;

artup and shutdown procedures for the GWTP;

WTP monitoring procedures and schedule;

WTP system maintenance and repairs;

ontingency plan; and

ampling and analysis requirements.

endices include:

WTP data collection sheet;

ir permit;

ischarge plan approval;

roundwater remediation system sampling record sheet; and

WTP O&M manual notes.

lemental manuals include:

ender-supplied equipment specifications and manuals.

## VTP DESCRIPTION

GWTP is designed to capture groundwater contaminated with VOCs; deliver the nated water to the treatment plant; treat it to New Mexico Environmental ent's (NMED's) specified cleanup goals through the unit operations of air g, and activated carbon adsorption; and discharge the treated water to the ty of New Mexico (UNM) Championship Golf Course pond. The GWTP nd instrumentation diagram (P&ID) is shown in Figure 2.1.

groundwater recovery well component of the system is designed to draw down r table at the boundaries of the "plume" of contamination. Drawdown will gradient toward the recovery wells, ensuring that the plume will not migrate ts current boundaries, and that all contaminated groundwater will be collected ment. Figure 2.2 shows the wells and GWTP building locations.

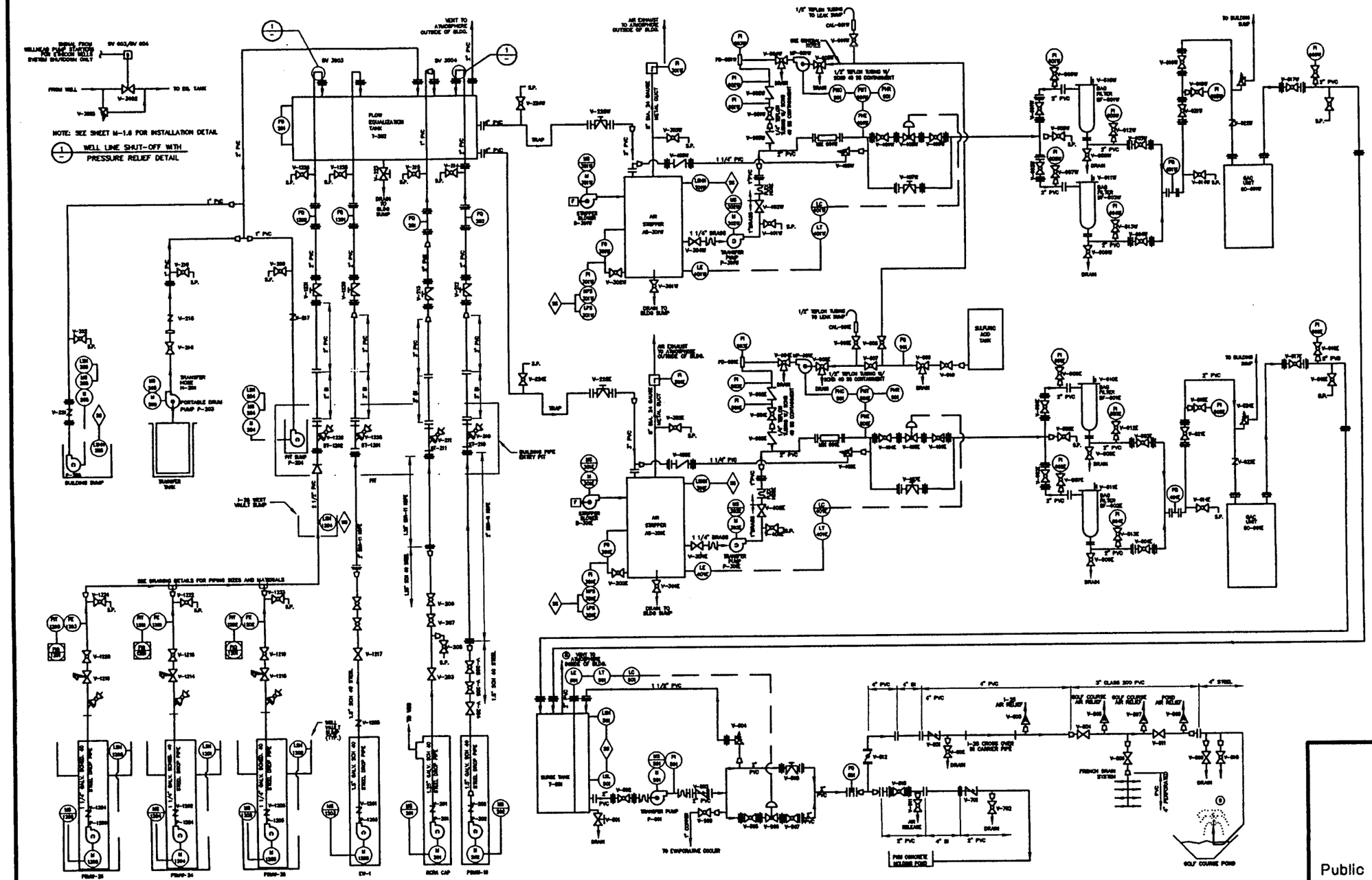


**FIGURE 2.1**

**GROUNDWATER TREATMENT PLANT P&ID**

Public Service Company of New Mexico
Person Generating Station
Albuquerque, New Mexico

PARSONS ENGINEERING SCIENCE, INC.
Denver, Colorado

K:\PNM\722445\96DN0654, 08/12/96 at 10:55

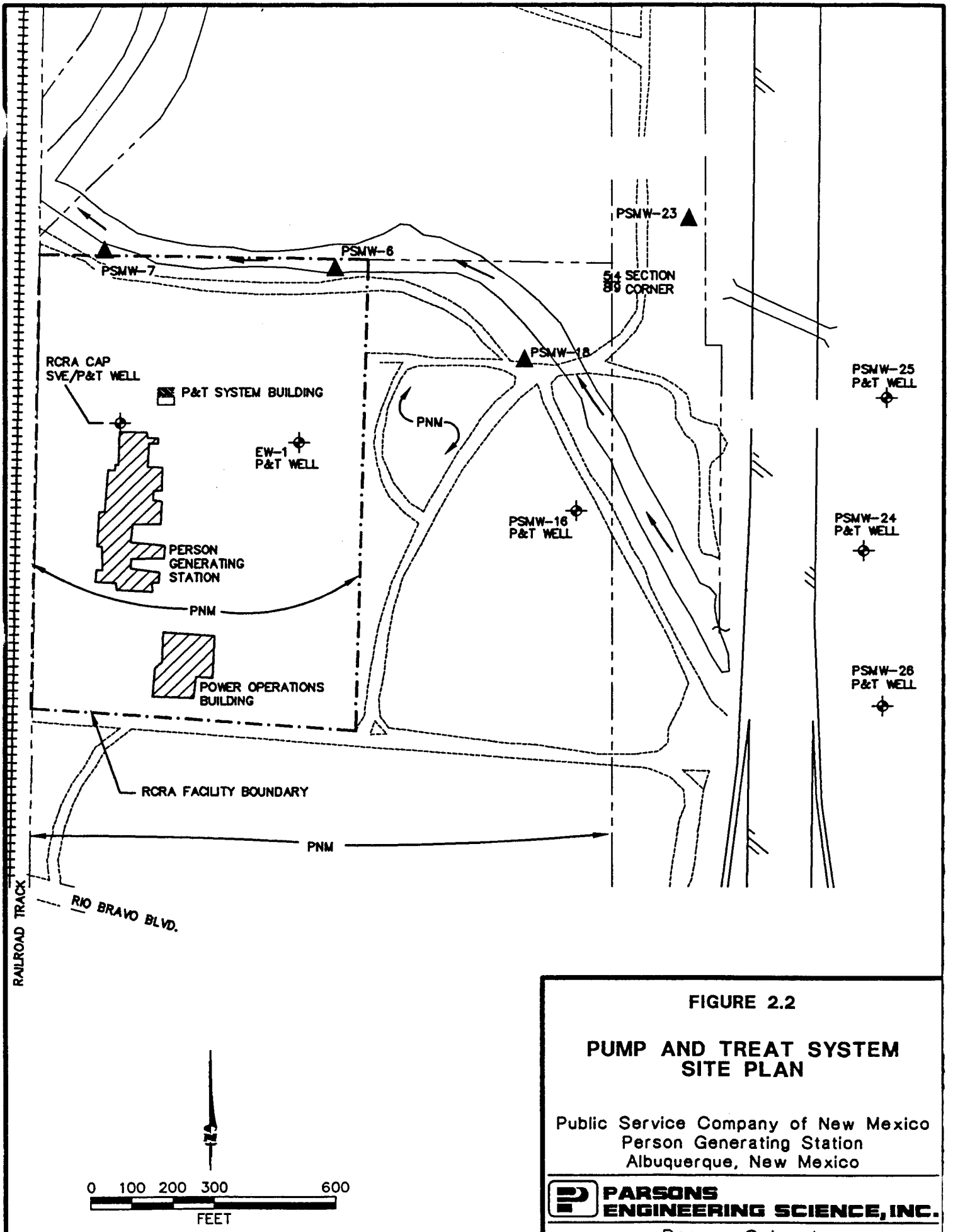


**FIGURE 2.2**

**PUMP AND TREAT SYSTEM SITE PLAN**

Public Service Company of New Mexico
Person Generating Station
Albuquerque, New Mexico

PARSONS ENGINEERING SCIENCE, INC.
Denver, Colorado

K:\PNM\O&M\95DN0241 7/27/96 @10:35

Air stripping and activated carbon adsorption are the treatment unit operations that will remove VOC contamination from the recovered groundwater. Air stripping exploits the volatility and insolubility of VOCs in water, to transfer (remove) VOCs from water, into an air stream that can be safely discharged to the atmosphere. Contaminated water flows into the top of the air stripper and cascades downward through baffled trays to the stripper sump. The stripper blower forces air upward through aeration tubes in the stripper trays, and "countercurrent" to the flow of the water. VOCs are vaporized out of the water, into the air flow. Air stripper liquid effluent is transferred to additional treatment operations, described below. Air stripper offgas is discharged to the atmosphere.

Air stripper liquid effluent is next pumped through bag filters. Any suspended solids in the effluent, larger than the nominal filter size will be collected in the filters. Filtration of suspended solids is an important precursor to treatment by activated carbon. If suspended solids are not filtered out prior to carbon treatment they will be trapped in the carbon units, increasing the pressure drop across the carbon units. If/when the pressure within the carbon units approaches the pressure rating of the units, the units must either be changed out prematurely; or the plugged section of carbon must be removed.

The final treatment step, to ensure that no detectable concentrations of VOCs are left in the air stripped water, is adsorption on activated carbon. Any trace of VOCs not removed in the air stripper will be adsorbed onto the surface of the carbon stored in a flowthrough vessel. Sampling ports are positioned in the line before and after the carbon unit, so that water samples can be collected. Based on analytical results from the water samples, the carbon unit can be removed from service and replaced with a fresh unit to ensure that optimal carbon treatment is continually online. The carbon unit could also have to be replaced if it is perceived, through pressure drop, that fouling has occurred due to plugging or excessive bioactivity.

Treated water is pumped through the carbon unit to a surge tank. A transfer pump on the surge tank outlet pumps the water to the UNM Championship Golf Course pond.

The components of the GWTP, their associated controls and monitoring instrumentation, are described in the following sections. All system components described below, with the exception of the groundwater recovery pumps, are located within the GWTP building. The GWTP building layout is depicted in Figure 2.3.

## 2.1 Automatic and Manual System Shutdowns

Several control conditions in the GWTP are wired to automatically shut down the entire system. Conditions that trigger shutdown include tank overflows, empty tanks (potentially damaging to transfer pumps), and pH conditions not within the specified setpoints. Specifically, automatic system shutdowns will occur under the following conditions:

- air stripper blower high pressure;
- air stripper blower low pressure;

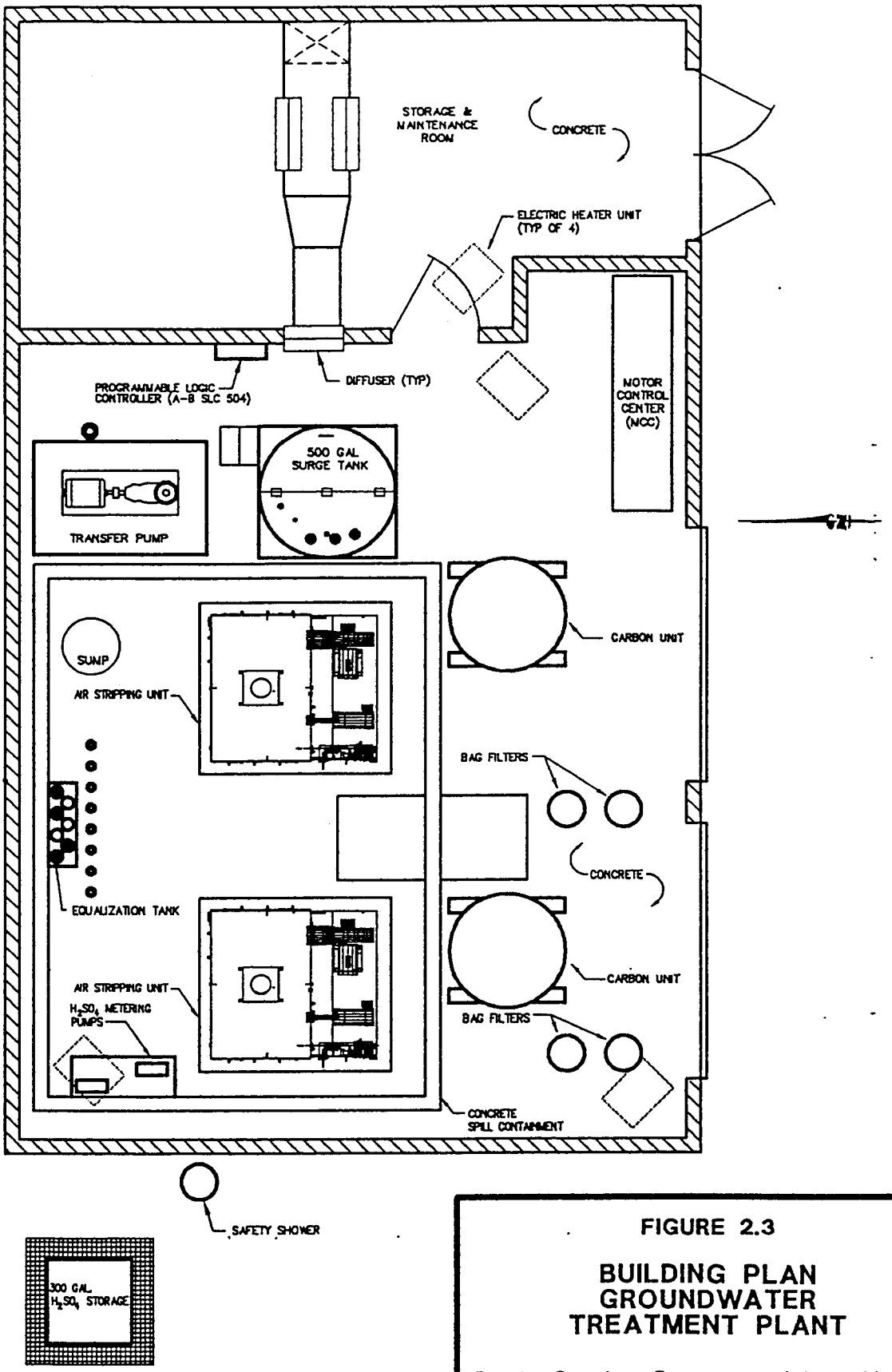


FIGURE 2.3

BUILDING PLAN
GROUNDWATER
TREATMENT PLANT

Public Service Company of New Mexico
Person Generating Station
Albuquerque, New Mexico

PARSONS ENGINEERING SCIENCE, INC.
Denver, Colorado

K:\PNN\DWN\950N0242.07/27/96 at 12:46

- air stripper sump high level;
- pH high;
- pH low;
- surge tank high level;
- golf course pond high level;
- surge tank low level; and
- building sump high level.

Automatic system shutdown cuts off power to the groundwater pumps, air stripper blowers, air stripper transfer pumps, acid metering pumps, and the surge tank transfer pump. In addition to the automatic system shutdowns, there is one remote shutoff switch located at the UNM Championship Golf Course pond, that can only be operated with a key. A series of light switches located on the far right side of the motor control center (MCC) will illuminate components that are in automatic system shutdown mode. The system component which initiates the shutdown will be indicated with a flashing light switch. The motor control center is depicted in Figure 2.4.

All automatic system shutdowns and the operating conditions that trigger shutdown are further discussed in the component-specific system descriptions in the following sections.

## 2.2 Groundwater Wells and Pumps

Groundwater is recovered for treatment from the recovery wells. The RCRA Cap well is located approximately 25 feet north of the northwest corner of the Person Generating Station. PSMW-16 is located approximately 1,000 feet east of the Person Generating Station.

At the RCRA Cap well, the water table is at a depth of approximately 124 feet and the well is drilled to a depth of approximately 140 feet. The borehole is approximately 11 inches in diameter. The well is four inches in diameter and has a polyvinyl chloride (PVC) Schedule 40 casing. The casing is sealed in bentonite cement from the ground surface to a depth of five feet, and has a layer of 1/4-inch bentonite pellets from the depth of five feet to seven feet. Below the bentonite pellet layer the well casing is slotted and screened, and is sand-packed to bottom of the well. In addition to groundwater recovery, the slotted, screened portion of the well casing that is above the water table is connected to the soil vapor extraction (SVE) system.

The submersible well pump is a Sta-Rite Series 10, 6 stage, with a stainless steel shell. It has a capacity of 10 gallons per minute (gpm) against 189 feet (82 pounds per square inch [psi]) of static and dynamic head, and is powered by a 1.5 horsepower (hp) Franklin motor (3 phase, 60 hertz, 460 volts). The pump is capable of a shutoff head pressure of 250 feet (108 psi). The flow from the RCRA Cap well is expected to be approximately 1 gpm.

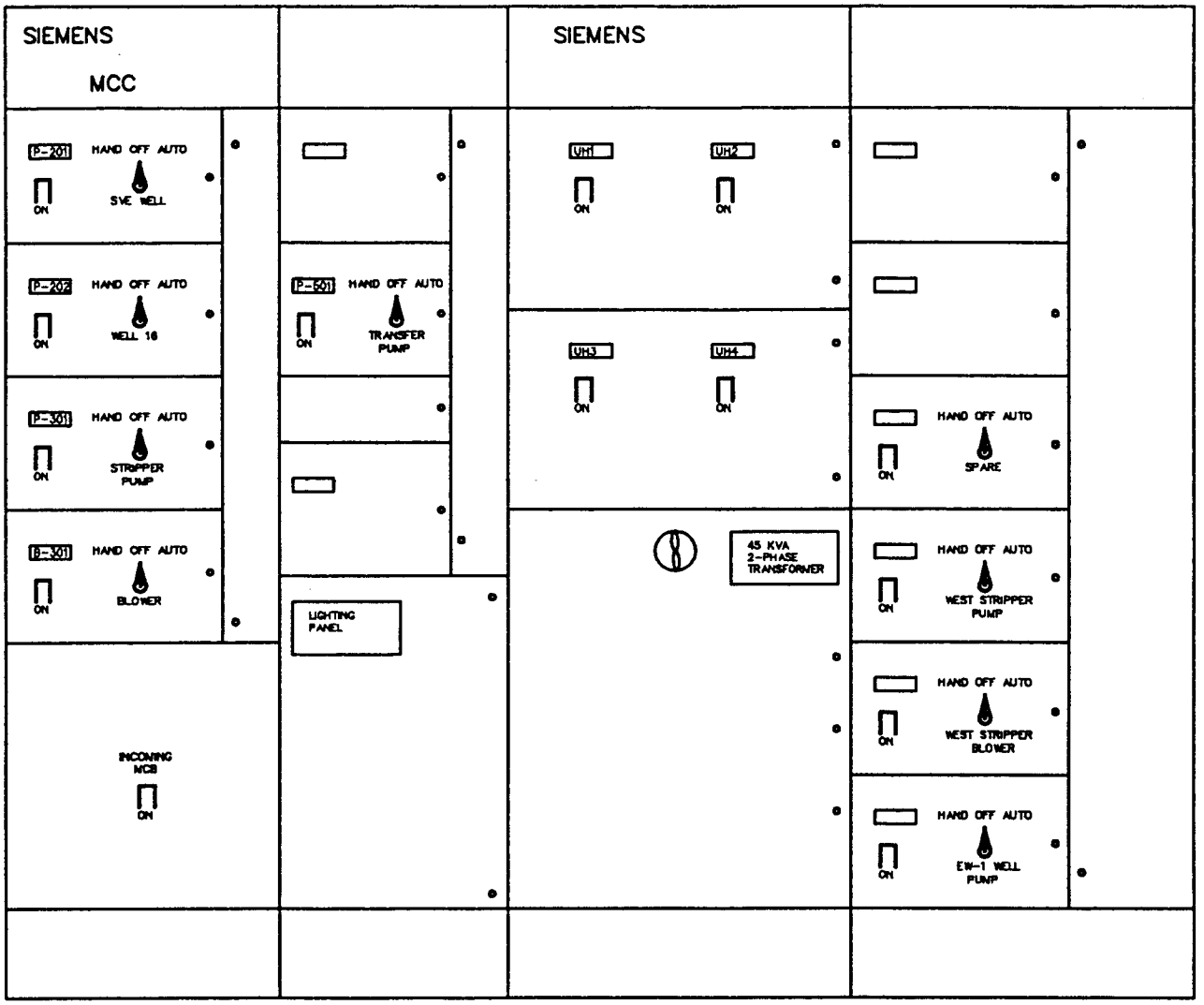


ANNUNCIATOR PANEL (WEST END OF MCC)

1. AIR STRIPPER BLOWER HIGH PRESSURE
2. AIR STRIPPER BLOWER LOW PRESSURE
3. GOLF COURSE POND MANUAL STOP
4. AIR STRIPPER SUMP HIGH LEVEL
5. SURGE TANK HIGH LEVEL
6. GOLF COURSE POND HIGH LEVEL
7. SURGE TANK LOW LEVEL
8. BUILDING SUMP HIGH LEVEL

X. BLANK
X. BLANK
X. BLANK
X. BLANK

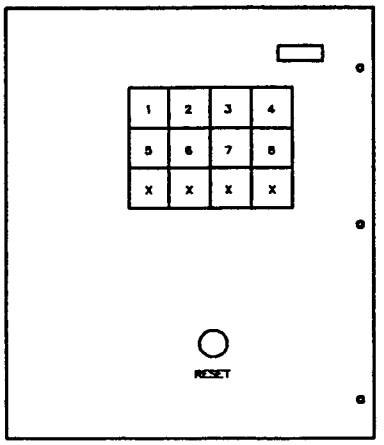


**FIGURE 2.4**

**GROUNDWATER TREATMENT PLANT MOTOR CONTROL CENTER**

Public Service Company of New Mexico
Person Generating Station
Albuqerque, New Mexico

**PARSONS ENGINEERING SCIENCE, INC.**

Denver, Colorado

At PSMW-16, the water table is at a depth of approximately 188 feet, and the well is drilled to a depth of approximately 205 feet. The well is four inches in diameter and is cased with Schedule 40 PVC. The slotted, screened portion of the casing begins at the water table at a depth of approximately 190 feet and extends to the bottom of the well. The discharge pipe is routed underground at a depth of two feet. A gate valve and two plug valves on the discharge pipe can be accessed through a valve box that extends downward from the ground surface, to the discharge pipe valve.

The submersible well pump is a Sta-Rite Series 30, 20 stage, with a stainless steel shell. It has a capacity of 30 gpm against 480 feet (208 psi) of static and dynamic head, and is powered by a 5-hp Franklin motor (3 phase, 60 hertz, 460 volts). The pump is capable of a shutoff head pressure of 700 feet (303 psi). The flow from PSMW-16 is expected to be approximately 30 gpm.

The wells are equipped at the well head with two throttling valves (plug valves) to adjust for individual flow rates and one shut off valve (gate valve). The throttling valves can be adjusted to provide constant flow from each well pump to the treatment system. The flow rate of the plant will then be adjusted to accommodate the steady state flow achieved by the wells.

The groundwater recovery pump motors are tied in to automatic and manual system shutdown controls, as described in Section 2.1, above. The pump motors are also equipped with current switches (pump savers) to prevent overloading. Vendor cutsheets detailing the specifications of the pumps and motors are provided in the supplemental manual.

## 2.3 GWTP Piping and Vents

The specifications for piping from the groundwater recovery wells, through the treatment system, and to the point of discharge are summarized in Table 2.1.

The air strippers are vented to the atmosphere outside the GWTP building. The air stripper vents are constructed of 8-inch diameter 24 gauge metal duct. The surge tank is vented to ambient air inside the GWTP building. The surge tank vent is constructed of 2-inch diameter Schedule 80 PVC.

## 2.4 Building Sump

A building sump is cast into the floor of the GWTP building, within the curbed area surrounding the air stripper. The sump is covered with a steel grate. The opening is 2 feet in diameter. A high level switch in the sump is tied into the system shutdown.

A dedicated pump has been installed within the sump along with a second level switch. Should water begin to enter the sump, this level switch will activate the sump pump and water will be transferred directly to the equalization tank. System shutdown will be activated by a high level switch within the sump if the water entering the sump exceeds the discharge capacity of the sump pump.

## TABLE 2.1
## GWTP PIPING SPECIFICATIONS
## PUBLIC SERVICE COMPANY OF NEW MEXICO
## PERSON GENERATING STATION

| PIPE RUN | | MATERIAL OF CONSTRUCTION | DIAMETER/ SCHEDULE (inches) | PRESSURE RATING (psi) |
|---|---|---|---|---|
| From | To | | | |
| Pump P-201 (RCRA Cap well) | Well head | Galvanized steel | 1.25 / SCH 40 | 1000 |
| Well head | Treatment building exterior | HDPE | 1.25 / SDR 11 | 160 |
| Building exterior | Building foundation penetration | Black iron | 3 / SCH 40 | 1000 |
| Building interior | Equalization tank inlet | PVC | 2 / SCH 80 | 400 |
| Pump P-202 (PSMW-16) | Well head | Galvanized steel | 1.25 / SCH 40 | 1000 |
| Well head | Treatment building exterior | HDPE | 2 / SDR 11 | 160 |
| Building exterior | Building foundation penetration | Black iron | 3 / SCH 40 | 1000 |
| Building interior | Equalization tank inlet | PVC | 2 / SCH 80 | 400 |
| Pump P-203 (Transfer tank) | Building exterior camlock | Braided vinyl | 1 / N.A. | 140 |
| Building Exterior Camlock | Equalization tank inlet | PVC | 1 / SCH 80 | 630 |
| Equalization tank outlet | Air stripper inlet | PVC | 4 / SCH 80 | 320 |
| Stripper transfer pump | Surge tank inlet | PVC | 2 / SCH 80 | 400 |
| Surge tank outlet | Downstream from control valve | PVC | 2 / SCH 80 | 400 |
| Downstream from control valve | Treatment building wall | PVC | 4 / SCH 80 | 320 |
| Building interior | Building foundation penetration | Black iron | 4 / SCH 40 | 1400 |
| Building foundation penetration | UNM Championship Golf Course | PVC | 4 / SCH 80 | 320 |
| UNM Championship Golf Course | Golf course pond | PVC | 3 / CL 200 | 200 |
| Downstream from pump P-501 | Evaporative cooler | Copper | 1 / TYPE K | 250 |

N.A. = Not Available

## 2.5 Equalization Tank

Water is pumped from the wells into an equalization tank. The purpose of the equalization tank is to evenly split flow to two air strippers. [The Phase I GWTP design and construction includes one air stripper. Phase II will add a second air stripping unit to be operated in parallel, increasing treatment capacity from 50 gpm to 100 gpm]. The equalization tank, supplied by Chem-tainer, is 1 foot wide by 3 feet long by 3 feet high, and has a capacity of 67 gallons. It is constructed of high density polyethylene (HDPE). The equalization tank is equipped with a site glass to determine liquid level and a tank stand to elevate the bottom of the tank six feet above the floor. The elevation of the equalization tank allows for gravity feed to the air stripper(s). Since the equalization tank is gravity drained, accumulation of recovered groundwater can only take place if the drain valves are closed. Inlet piping to the equalization tank comes into the top of the tank. The tank is covered and vented to the outside of the GWTP building. Outlet pipe fittings are flanged polyvinyl chloride (PVC) to connect the equalization tank to the air stripper(s).

## 2.6 Air Permit

A copy of the Air Permit is included in Appendix B.

## 2.7 Air Strippers

The air stripper is the first treatment operation in the GWTP. The air stripper is an Ejector Systems Cascade LP5002, factory-equipped with: blower and blower motor; transfer pump and pump motor; two trays; high/low level switch; high and low air pressure switches; and line sampling ports. General features and dimensions of the air stripper are shown in Figure 2.5. (Additional detailed drawings and descriptions of air stripper components are provided in the supplemental manual).

Water flows by gravity from the equalization tank to the inlet on top of the air stripper. Water flows downward through baffled trays, containing aeration tubes. A blower forces air through the aeration tubes and into the water as it cascades through the

Stripper trays. VOCs are transferred from the liquid phase to the vapor phase. Treated water is collected in the air stripper's built-in sump, and then is pumped to the bag filters and carbon adsorption unit (described in Sections 2.8 and 2.9). Stripper offgas is discharged to the atmosphere. The air stripper O&M Manual and specifications are provided in the supplemental manual.

One water sampling port is located between the equalization tank and each air stripper. Isolation valves were also located between the equalization tank and the air strippers. Air sampling ports and flow indicators are located on the stripper offgas lines. Analytical results from the upstream water sampling ports can be used to monitor influent water quality. Analytical results from the air sampling ports can be used to monitor air emissions.

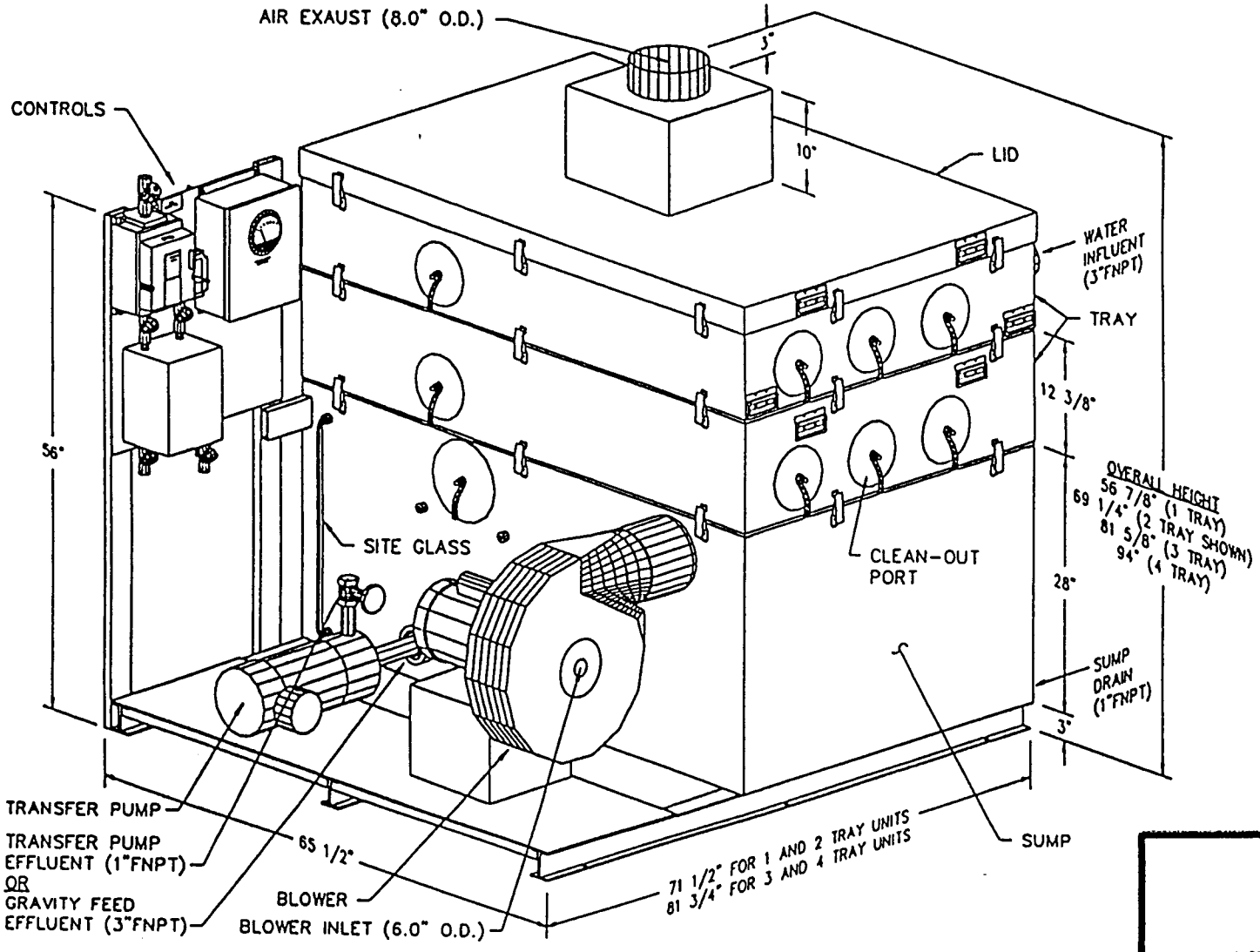


**FIGURE 2.5**

**P&T SYSTEM**
**AIR STRIPPER DIAGRAM**

Public Cervide Company of New Mexico
Person Generating Station
Albuquerque, New Mexico

PARSONS ENGINEERING SCIENCE, INC.
Denver, Colorado

Three system shutdowns are wired into the operation of the air strippers. The first two shutdowns are controlled by high and low pressure switches between the blower and the aeration tubes. The third shutdown is controlled by "high-high" water level in the stripper. These shutdown conditions are failsafes to ensure that water can not pass through the stripper partially treated or untreated. Low water level in the air stripper sumps will shut off the air stripper effluent transfer pumps, and high water level will restart the stripper effluent transfer pumps.

### 2.7.1 Stripper Blower

The stripper blower is a Cincinnati Blower, Model PB-15, factory-installed by Ejector Systems. It is a spark-resistant, radial-blade pressure type blower, with the blower wheel mounted directly on the motor shaft. The blowers can achieve a shutoff head pressure of 19.2 inches of water gauge (0.7 psi). The blowers should be adjusted to deliver 400 (as a minimum) cubic feet per minute (cfm) of air flow into the stripper, under normal operating conditions. The velocity flow indicator (FI-301) should read 0.07 inches of water (minimum) to achieve a flow rate equal to 400 cfm. Manufacturer's recommendations are to set the flow indicator at 0.08 inches of water.

The blower motor is also factory-installed and supplied by Ejector Systems. The motor is manufactured by Baldor (Model No. M3610 T) and is constructed of iron. It delivers 3 hp and requires a 3-phase, 60-hertz, 460-volt power source.

A pressure indicator is connected to the top of each of the stripper sump fluid level site gauges. Pressure switches are tied into system shutdowns. High pressure is indicative of clogging of the aerator tubes. Low pressure is indicative of blower failure or a major leak in the air header. System shutdowns for high and low pressure conditions are necessary, as either condition could result in inadequate water treatment.

### 2.7.2 Air Stripper Effluent Transfer Pump

The transfer pumps deliver water from the air stripper sump through the downstream operations (bag filters and carbon adsorption) to the surge tank. The transfer pump is a Tramco, Model 125M-2, and are factory-installed by Ejector Systems. The pump is constructed of iron and has a design flow capacity of 60 gpm at 95 feet (41 psi) of total head. The pump is capable of a shutoff head pressure of 120 feet (52 psi) of total head.

The pump motor is also factory-installed and supplied by Ejector Systems. The motor is manufactured by Baldor (Model No. VM 3555) and is constructed of iron. It delivers 2 hp and requires a 3-phase, 60-hertz, 460-volt power source. The pump motor is tied into the automatic system shutdown.

Flow totalizers, pressure indicators, and treated effluent sampling ports are located downstream from each of the transfer pumps.

## 2.8 Acid Metering Pumps

The acid metering pumps meter 66° Baume (>98%) sulfuric acid ($H_2SO_4$) to the air stripped water prior to the bag filters. The metering pumps are Pulsafeeder Model 680

with a maximum metering capacity of approximately 10 milliliters per minute (ml/min). These pumps are positive displacement pumps with a shutoff head pressure well in excess of any achievable system pressure

Due to the pulsing/metering delivering these pumps provide, the acid delivery systems are equipped with pulsation dampeners to "smooth-out" the acid injection. This portion of the system is operated at a pressure of approximately 40 psi. This pressure is at (or above) the design pressure of the air stripper effluent transfer pumps and ensures that the acid can be injected into the air stripper effluent line.

These pumps are variable-stroke pumps operating on demand based upon a 4-20 milliamp signal from the pH controller. Increased demand results in an increased signal (i.e., higher milliamps) and therefore; a longer pump stroke to deliver more acid. Although there will be occasions when the pH of the air stripped groundwater will be above/below the pre-established setpoints, the overall system has sufficient surge to normalize the pH to address both calcium carbonate precipitation and the permit-proscribed acid addition rate.

## 2.9 Bag Filters

Bag filters are used to remove suspended solids from the treated liquid effluent after it leaves the air stripper. Suspended solids must be removed to ensure optimum treatment efficiency of the carbon adsorption unit, downstream from the bag filters.

Two bag filters are installed in the effluent line in a parallel configuration. Parallel installation and operation minimizes pressure drop due to filtration, and the frequency of bag changes. However, the GWTP can operate with only one bag filter on line. The filter housings are Knight Model RK30's. The housing is a 2 inch bottom outlet style and is constructed of carbon steel. The retaining basket is constructed of 304 stainless steel and holds a polyester felt filter element which will trap particles to a nominal size of 10 microns. The nominal depth of the basket is 30 inches. Each filter housing and bag filter has a maximum flow rate of 220 gpm and a maximum pressure rating of 150 psi. Vendor information on the Knight Model RK30 filter housing and bag filter is provided in the supplemental manual.

Pressure indicators are located upstream and downstream from both bag filters, on each branch of the parallel flow split. Stopcocks are located on the pressure indicator stems. The difference in pressure measured upstream and downstream from each bag filter is indicative of the amount of suspended solids that have been trapped in the bag (i.e., a small difference in pressure indicates that the filter is relatively clean, while a large difference indicates that the filter has trapped enough material to begin restricting flow). Ball valves are also located upstream and downstream from each bag filter, so that flow can be diverted through one bag filter while routine maintenance (e.g., filter change) is performed on the other.

## 2.10 Granular Activated Carbon Unit

One GAC unit is installed immediately downstream from the bag filters. Any trace of VOCs not removed from the water in the air stripper will be adsorbed on to the GAC.

The GAC unit is a Model ASC-1200, supplied by Westates Carbon. The unit contains 1,000 pounds of Type KG-401 (bituminous coal, 8x30 mesh) activated carbon. Forklift channels are built in to the base of the vessel to facilitate safe and easy movement of the unit. The inlet and outlet connections, both located on the top of the unit, are 2-inch FNPT threaded fittings. The GAC unit operates at a maximum flow rate of 50 gpm, maximum temperature of 120°F, and a maximum gauge pressure of 12 psi. Vendor information is provided in the supplemental manual.

Sampling ports and pressure indicators are located immediately upstream and downstream from the GAC units. Water samples can be collected from the sampling ports, and analytical results will allow evaluation of air stripping treatment efficiency, breakthrough of the GAC units, and final treated effluent water quality.

Routine monitoring of the pressure indicators will provide pressure drop data through this segment of the GWTP. A significant pressure drop could be indicative of particulate buildup in the GAC unit.

## 2.11 Surge Tank

Treated effluent leaving the GAC unit flows to the surge tank. The surge tank has a capacity of 500 gallons. It is constructed of polyethylene; 52 inches in diameter, and 60 inches in height. The surge tank is provided with a hinged cover and tank stand.

The surge tank is vented to ambient air inside the GWTP building. Level is controlled at approximately 250 gallons by a level element in the tank and a downstream flow control valve. High and low level switches are tied into system shutdowns.

### 2.11.1 Final Effluent Transfer Pump

A pump and piping system transfers water from the surge tank. The primary discharge is to the UNM Championship Golf Course pond. A small side stream can be taken as feed to the GWTP building's evaporative cooler. An auxiliary discharge valve (V-510, normally closed) is also downstream from the surge tank transfer pump and routes water to the PNM concrete holding pond.

The pump is an Aurora, Model 344A. It has a cast iron casing with a bronze impeller, and can deliver 100 gpm at 290 feet (126 psi) of total head. The pump motor is a 25 hp US Motor, requiring a 3 phase, 60 hertz, 460 volt power source. The pump is capable of a shutoff head pressure of approximately 310 feet (134 psi).

A pressure indicator and flow totalizer are located downstream from the transfer pump. A high level switch in the UNM Championship Golf Course pond is the last piece of instrumentation in the GWTP system, and it is tied into the system shutdown.

## 3.0 STARTUP AND SHUTDOWN PROCEDURES

### 3.1 Routine Startup Procedure

The following procedure should be used every time one of the GWTP process trains is started up. This procedure is written only for the "East" treatment train but applies equally to the "West" treatment train. All valves, between the equalization tank through each stripper train to the transfer tank, have the same tag number but are designated with an "E" (for east) of a "W" (for west). A general safety note regarding manual valve operation: when opening valves for service, the valve is to be opened to the full-stop position and then backed-off a quarter turn; when closing valves, the valve is to be closed to the full-stop position. Operating valves in this manner allows the operator to feel the position of the valve (i.e. a loose valve handle indicates a valve is in the open position while, a tight valve handle indicates a valve is in the closed position).

#### 3.1.1 Pre-start checklist

The following items should be checked prior to starting up the GWTP. Valve numbers correspond to labels on the GWTP piping and instrumentation diagram (P&ID).

1. Select the east stripper train by turning switch JB-18 on the MCC to the "east" position. The GWTP system shutdown status lights will then be activated. If the status lights indicate that the air stripper water level is at the high level system shutdown, open valves V-407 and close V-404. Start pump P-302 with the HOA switch in the hand position, to transfer stripper sump water to through GAC unit GC-601, and into the surge tank T-501. Watching the stripper sump sight glass, pump stripper sump until the sump is approximately half-full. Close valve V-407, and open V-404.

2. Valves between groundwater recovery wells and the equalization tank (V-203, V-204, V-206, V-207, V-208, V-209, V-212, V-213, V-1218, V-1219, V-1220, V-1230, and V-1231) must be open.

3. Equalization tank drain valve (V-223) must be closed.

   - East air stripper influent valve (V-225E) must be open.

   - West air stripper influent valve (V-225W) must be closed.

   - Isolation valves (V-404W and V-406W) for the West air stripper flow control loop must be in their "normally open" position.

   - Flow control loop by-pass valve (V-407E) should be closed.

   - Air stripper drain valve (V-301) must be closed.

   - Air stripper effluent valves (V-304E, V-402E and V-403) must be open.

   - Air stripper fluid site glass valve (V-302E) must be open.

- Sample port valve (V-401E) must be closed.

4. Bag filter valves (V-601E, V-602E, V-603E, V-604E and V-616E) must be open for parallel filter use. For single filter use, either bag filter valves (V-601E, V-603E and V-616E) or bag filter valves (V-602, V-604 and V-616) must be open. Bag filter drains (V-608E and V-609E) must be closed. Bag filter air release valves (V-610E and V-611E) must be slightly open if bag filters are not filled with water and parallel use is desired. For single filter use, either bag filter air release valve (V-608E) or bag filter air release valve (V-609E) must be slightly open. When the bag filter(s) are full of water (water coming out of the air release valve) , the air release valve(s) must be closed.

5. Transfer tank influent valve (V-617) must be open.

   - Transfer tank drain valve (V-501) must be closed.

   - Transfer tank effluent valve (V-502) must be open.

6. Flow control valves (V-505 and V-507) must be open.

   - Throttling/bypass valve (V-508) must be partially closed.

   - Evaporative cooler influent valve (V-509) must be closed.

7. All sampling port valves (V-205, V-214, V-215, V-219, V-220, V-222, V-224, V-303E, V-401E, V-605E, V-614E, V-619E, V-1222, V-1223, V-1224, V-1225, and V-1226) must be closed. Note: These are normally closed.

8. Strainer blow down valves (V-210, V-211, V-1201, and V-1202) must be closed.

9. The sulfuric acid "Tote" drain valve must be open.

   - V-909 (isolation valve) must be open.

   - V-908 must be open.

   - V-905E must be verified open.

   - V-906E must be verified closed (Note: this valve is only needed for pump calibration).

   - V-904E must be verified open.

   - V-901E must be verified open.

10. For golf course pond discharge:

   - Auxiliary discharge valve (V-510) must be closed.

- Golf course discharge valves (V-512 and V-804) must be open.
- Drain valves (V-802, V-806, V-809 and V-810) must be closed.

11. For PNM holding pond discharge:
    - Golf course discharge valve (V-512) must be closed.
    - Auxiliary discharge valve (V-510) must be open.
    - Air release valve (V-511) must be closed.
    - Drain valve (V-702) must be closed.

### 3.1.2 Startup procedure

The following procedure must be followed to properly start up the GWTP, after checking all items on the pre-start checklist. The GWTP includes two parallel treatment trains, that may be run simultaneously or individually. Routine operations require one treatment train on-line, so the procedure below describes startup of one treatment train. Equipment and valve numbers in the procedure correspond to the "East" treatment train. All parallel equipment and valves in the "West" train are tagged with similar numbers followed by a "W".

All instrumentation designations correspond to the labels on the GWTP piping and instrumentation diagram. All motor starters are panel-mounted on the MCC.

1. Check the MCC. Set hand-off-auto (HOA) switches for P-201, P-202, P-301, B-301, and P-501 to the off position. Ensure that breaker switches for the incoming main circuit breaker (MCB), UH1, UH2, UH3, UH4, P-201, P-202, P-1203, P-1204, P-1205, P-1206, P-301, B-301, and P-501 are on.

2. All disconnect switches must be on. Disconnect switches are located at well heads PSMW-16, RCRA cap, PSMW-24, PSMW-25, and PSMW-26; air stripper blower; and air stripper transfer pump.

3. Turn on remote shut-off switch (RMS-501) located at the UNM Championship Golf Course pond.

4. Reset automatic system shutdowns with the reset button located on the MCC.

5. If surge tank T-501 level is at the high level system shutdown, open valves V-502 and V-508 and start surge tank transfer pump (P-501). Start the pump with the HOA switch on the hand position and pump the level in the surge tank down. Turn transfer pump HOA switch back to the off position. Return surge tank valves to pre-start settings.

6. Start the air stripper blower (B-301) by turning the HOA switch to the hand position.

7. Check pressure indicator (PI-301) and flow indicator (FI-301) to ensure that the blower is functioning.

8. Start the groundwater recovery pumps (P-201, P-202, P-1203, P-1204, P-1205 and P-1206) by turning the HOA switches to the hand position.

9. Check flow totalizers (FQ-201, FQ-202, FQ-1201, and FQ-1202) to ensure water is flowing from the wells to the treatment system. FQ-1202 totalizes flow from wells PSMW-24, PSMW-25, and PSMW-26. After completing GWTP startup, check PSMW-24, PSMW-25, and PSMW-26 to verify all three well pumps are operating.

10. Check the stripper sump liquid level. When the site glass indicates that the sump is half full start the air stripper transfer pump (P-301) by turning the HOA switch to the auto position.

11. Check flow totalizer (FQ-401) to ensure water is flowing from the air stripper to the surge tank.

12. Check pH control (sulfuric acid addition)valves and pump. Ensure that valves V-1508, V-905, V-904, and V-901 are open, and metering pump MP-901 is in automatic mode. V-905, V-904, and V-901 are three-way valves, with open positions to process and drain. Ensure that they are open to the process line.

13. Close bag filter air releases (V-610 and V-611) once bag filters are filled with water (i.e. water flows from valves V-610 and V-611).

14. Monitor the water level in the surge tank (T-501). When the tank is approximately half-full, start the surge tank transfer pump (P-501) by turning the HOA switch to the auto position.

15. Check flow totalizer FQ-501 and pressure indicator PI-501 to ensure water is flowing from the surge tank to the UNM Championship Golf Course pond.

16. Adjust throttling (plug) valves located at PSMW-16 (V-206 and V-208) and RCRA Cap (V-207 and V-209) well heads to provide steady flow and constant drawdown.

17. Check the MCC.

    a. If all system shutdown indicators are off (panel lights are not lit), then enable the automatic systems by turning all HOA switches to the auto position.

    b. If any of the automatic system shutdown indicators are on (panel lights are lit), try pushing the reset button. Some of the automatic system shutdowns may have been engaged during the manual startup procedures and need to be reset. If all automatic system shutdown lights do not tur

off at this point, then the plant must be shut down and the problem area(s) must be addressed.

21. Begin normal operations monitoring. Record data on data collection sheets.

### 3.2 Shutdown Procedure

The GWTP is designed for continuous operation. The need for unscheduled maintenance or troubleshooting may require shutting down the GWTP. The following shutdown procedure should be followed.

1. Shut off groundwater recovery pumps (P-201, P-202, P-1203, P-1204, P-1205, and P-1206) by turning the HOA switches to the off position.

2. Close the shutoff valves (V-212, V-213, V-1230, and V-1231) to ensure that water held up in the well field pipeline does not continue to drain into the equalization tank.

3. Allow the surge tank low level system shutdown to shut down the system.

4. Close the golf course discharge valve (V-512), or close the auxiliary discharge valve (V-510) if pumping to the PNM concrete holding pond, to ensure that water does not flow back from the discharge line(s).

5. Close Valve V-225 located at the inlet to the air stripper.

6. Set the toggle switch on the acid metering pump (MP-901) to the manual position and the HOA selector switch to off.

## 4.0 MONITORING PROCEDURES AND SCHEDULE

Routine monitoring of GWTP includes daily checks on operating parameters; and sampling of water influent and effluent, and air stripper offgas. Routine monitoring of system operation is necessary to ensure that all system components are functioning as required to continuously treat recovered groundwater to specified cleanup criteria. Routine monitoring is also an important method of early detection of mechanical problems in pumps, piping, tanks, or treatment operations; and situations that simply indicate the need for preventive maintenance or cleaning. Monitoring procedures for operation of the GWTP are described in the following sections. The monitoring schedule is summarized in Table 4.1. The GWTP data collection sheet can be found in Appendix A.

The monitoring procedures and schedule presented in the following sections are applicable to normal operation of the treatment system.

### 4.1 Water Flow Totalizers

Flow totalizers are located at several points through the treatment system, as described in the following sections. Readings can be used to determine flow rates or to simply track the total volume of water treated. Readings may also be used as indicators of unusual situations, such as leaking pipes or open drain valves in the system. If all

# TABLE 4.1
# GWTP ROUTINE OPERATIONMONITORING SCHEDULE
# PUBLIC SERVICE COMPANY OF NEW MEXICO
# PERSON GENERATING STATION

**DAILY MONITORING** is required during normal operations for the parameters listed below.

| Measurement of | From | Instrument | Comments |
|---|---|---|---|
| Cumulative Water Flows | RCRA Cap well<br>PSMW-16<br>Air stripper effluent<br>Surge tank effluent | FQ-201<br>FQ-202<br>FQ-401<br>FQ-501 | RCRA Cap plus PSMW-16 flows should equal air stripper effluent.<br><br>Air stripper effluent should equal surge tank effluent, if readings are taken simultaneously. |
| Air Pressures | Stripper blower | PI-301 | Normal pressure is ____ in. of H2O High or low pressure indicates maintenance may be required. |
| | Stripper offgas stack | FI-301 | Normal pressure is ____ in. of H2O High or low pressure indicates maintenance may be required. |
| Water Pressures | Before bag filter BF-601<br>After bag filter BF-601 | PI-601<br>PI-603 | A pressure drop of ____ psi from PI-601 to PI-603 indicates that the filter in BF-601 should be replaced. |
| | Before bag filter BF-602<br>After bag filter BF-601 | PI-602<br>PI-604 | A pressure drop of ____ psi from PI-602 to PI-604 indicates that the filter in BF-602 should be replaced. |
| | Before carbon GC-601<br>After carbon GC-601 | PI-605<br>PI-606 | A pressure drop of ____ psi from PI-605 to PI-606 indicates that carbon unit GC-601 should be replaced. |
| | Surge tank effluent | PI-501 | Normal pressure is ____ psi. High or low pressure indicates maintenance may be required. |

totalizer readings are taken in one quick walkthrough while the system is operating normally, the two well flows should sum to the air stripper effluent total, and the air stripper effluent total should closely approximate the surge tank total.

### 4.1.1 GWTP influent

Flow totalizers (FQ-201 and FQ-202) are located on the GWTP influent lines from each of the two groundwater recovery wells. Readings should be recorded once daily. Flow rates from each well should be calculated to ensure that the design flow rates (approximately 1 gpm from the RCRA cap well, and 30 gpm from PSMW-16) are being attained. The flow rate can be calculated by subtracting the previous day's totalizer reading from the current reading, and dividing this difference by the total minutes of system operation between the two readings.

### 4.1.2 Air stripper effluent

A flow totalizer (FQ-401) is located on the air stripper effluent line. A reading from this flow totalizer should be recorded once daily. If all totalizer readings are consistently collected at the same time, the GWTP influent totalizer readings should sum to the air stripper effluent totalizer reading.

### 4.1.3 Surge tank effluent

A flow totalizer (FQ-501) is located on the surge tank effluent line. A reading from this flow totalizer should be recorded once daily.

## 4.2 Stripper Air Flow

Stripper air flow is monitored at the blower pressure indicator (PI-301) and the offgas flow indicator (FI-301). These monitoring points provide indications of the need for blower or air stripper maintenance. Readings from these instruments should be recorded on a daily basis. Low pressure at the blower outlet indicates blower or motor malfunction. High pressure at the blower outlet and/or low offgas flow indicates clogged aerator tubes in the stripper trays.

## 4.3 Pressure at Air Stripper Transfer Pump

The pressure downstream from the air stripper effluent transfer pump can be monitored at PI-601 and PI-602. Pressure readings from PI-601 and PI-602 should be recorded once daily. Unusually low pressure indicates transfer pump or pump motor malfunction. Unusually high pressure indicates a downstream flow obstruction.

## 4.4 Pressure Drop Across Bag Filters

Pressure drop across the bag filters can determined from pressure indicator readings. These readings should be recorded daily. The pressure drop measured by difference between pressure indicators PI-603 and PI-601 is indicative of the amount of material trapped in bag filter FB-601. The pressure drop measured by difference between pressure indicators PI-604 and PI-602 is indicative of the amount of material trapped in bag filter FB-602. All four pressure indicators around the bag filters (PI-601, PI-602,

PI-603, and PI-604) have PVC stopcocks in their stems. To obtain a pressure reading, the stopcocks must be open. For pressure indicator maintenance operations the stopcocks should be closed. When the pressure drop measured across either filter increases significantly, the bag filter should be replaced.

### 4.5 Pressure Drop Across GAC Unit

Pressure drop across the GAC unit is measured by the difference between upstream and downstream pressure indicators. A higher than normal pressure drop may indicate clogged GAC unit inlet or outlet lines, or a buildup of suspended solids in the GAC unit. The bag filters should be effective in removing suspended solids, however, in the event of bag filter failure suspended solids may be carried into the GAC unit. Presence of suspended solids in the GAC unit will greatly increase the pressure drop across the unit, resulting in premature change-out or increased maintenance of the GAC unit. Pressure drop across the GAC unit can be determined by difference between pressure readings at PI-605 and PI-606. Pressure drop across the GAC unit should be measured and recorded once per day.

### 4.6 Pressure at Surge Tank Transfer Pump

The pressure downstream from the surge tank transfer pump can be monitored at PI-501. Pressure readings from PI-501 should be recorded once daily. Unusually low pressure indicates transfer pump or pump motor malfunction. Unusually high pressure indicates a downstream flow obstruction.

## 5.0 MAINTENANCE AND REPAIRS

Routine monitoring of the GWTP will provide information needed to schedule preventive maintenance for the system's components, and to detect conditions that require equipment repair or replacement. Equipment cleaning and light maintenance tasks should be performed by the GWTP operator, as described in the following sections.

### 5.1 Pump Maintenance

The transfer pumps require no maintenance other than periodic inspection, occasional cleaning and lubrication of bearings. Vendor specifications and the O&M procedures for both the air stripper transfer pump and the golf course transfer pump are provided in the supplemental manual.

### 5.2 Air Stripper Maintenance

#### 5.2.1 Air stripper vendor specifications and point-of-contact

Vendor specifications for the Ejector Systems Inc., Cascade LP5002 air stripper are provided in the supplemental manual. The point-of-contact for the air stripper is:

Mike Weber
Ejector Systems, Inc.
910 National Avenue
Addison, Illinois 60101-9812

Phone (708) 543-2214 or 1-800-645-5325 (800-OIL-LEAK)
Fax (708) 543-2014

### 5.2.2 Routine air stripper maintenance

Routine maintenance and cleaning procedures are provided in the supplemental manual.

## 5.3 Bag Filter Maintenance

### 5.3.1 Bag filter specifications and point-of-contact

Vendor specifications for the Knight Model RK30 bag filters are provided in the supplemental manual. The bag filters are obtained from:

Rick Hobson
James, Cooke and Hobson, Inc.
3810 Academy Parkway South NE
Albuquerque, New Mexico 87109
Phone (505) 344-7100
Fax (505) 345-1487

### 5.3.2 Routine bag filter maintenance

The need for bag filter maintenance is indicated by the pressure drop across the bag filter. Pressure indicators are located upstream and downstream from each bag filter. The pressure drop is simply calculated as the difference between the two pressure indicator readings. The pressure drop expected through a single clean filter, at the anticipated GWTP flow rate of 50 gpm is approximately 0.23 psi. The pressure drop expected through two clean filters, at the anticipated GWTP flow rate of 25 gpm each, is approximately 0.15 psi. When the pressure drop reaches 15-25 psi, the filter medium is clogged with trapped particulate and must be replaced. If the pressure drop is less than 0.23 psi, or .15 psi when running both filters, the filter(s) should be checked. A lower than normal pressure drop may be an indication that the filter is improperly seated in its housing, and water may short-circuiting around the filter.

Since each of the bag filters are sized sufficiently for the full GWTP flow, bags can be replaced without shutting down the system. To replace the bag in unit FB-601:

1. Close valves V-601 and V-603.
2. Open the housing cover.
3. Lift the filter basket out of the unit, using the bail handle.
4. Remove and dispose the bag.
5. Place a new bag in the filter basket.
6. Place the filter basket back in the housing.
7. Close the housing cover.

. Open air release valve V-610.

. Open valves V-601 and V-603.

0. Close air release valve V-610 once water is emitted from valve top.

bag in unit FB-602 is replaced by the same procedure, except that valves V-602 -604 must be closed prior to bag removal, and reopened after bag replacement. r release valve V-611 for unit FB-602.

lacement bags can be ordered from the vendor identified in Section 5.3.1. The re type PE-10-P-2-S.

**AC Unit Maintenance**

**GAC unit vendor specifications and point-of-contact**

ıdor specifications for the Model ASC-1200 GAC unit are provided in the mental manual. The GAC unit is obtained from:

th Jones
states Carbon
kland, California
one (510) 639-7274
: (510) 639-7762

**Routine GAC unit maintenance**

: GAC units are practically maintenance-free during normal operation. enance consists of removing the spent unit from service and replacing it with a unit. Only trace concentrations of VOCs will reach the GAC unit, because the removal rate through the air stripper is expected to exceed 95%. The GAC unit therefore have a relatively long operational life, however it is very important to e and replace the unit as soon as less than optimal operation is indicated. The unit provides the polishing treatment step required to consistently meet cleanup

: need to replace a unit is triggered by either of two conditions: pressure drop red across GC-601 (PI-621 to PI-617) showing that the unit is clogged with ılates, or inlet/outlet lines are obstructed; or analytical data from samples ted at SP-619 showing that VOCs have broken through GC-601.

the event of abnormally high pressure drop the inlet and outlet lines to the GAC and valves V-621 and V-617, should be checked for obstructions. The GWTP be shut down (following the procedure in Section 3.2 of this manual) to eshoot the GAC unit. After shutting the system down, the inlet and outlet lines GAC unit should be disconnected to check for obstructions. If no obstructions und in the lines or valves, the GAC unit is clogged with particulate, and must be ed. (GAC unit clogging with particulate is also indicative of maintenance ems with the bag filters. Refer to Section 5.3 for bag filter maintenance checks).

Routine water sampling and analysis will provide warning of VOCs breaking through the GAC unit. When VOCs begin to come off GC-601, as indicated by sample results from SP-619, the unit's adsorptive capacity is spent, and it must be replaced. (Until the GWTP is up and running, the actual VOC concentration at SP-619 signaling that GC-601 is spent, will not be known. Based on actual operating GWTP influent and air stripper effluent sample analysis, a VOC "action level" for samples collected at the GAC unit can be determined). The replacement procedure is as follows:

1. Shut down the GWTP.
2. Close valves V-627 and V-617.
3. Disconnect the inlet and outlet lines of the spent unit.
4. Move the spent unit, with a forklift, to the spare GAC storage area.
5. Move a fresh GAC unit, with a forklift, into place. (A fresh unit may require preconditioning per manufacturer's recommendations prior to operation. Ensure that the unit is preconditioned, if necessary).
6. Connect the inlet to the upstream process line. Connect the outlet to the downstream process line.
7. Open valves V-621 and V-617.
8. Restart the GWTP.
9. Check pressure indicators to ensure proper operation.

If VOC concentrations greater than the cleanup goals are detected at SP-619, the GWTP must be shut down. All process operations (air stripper, bag filters, and GAC unit) should be checked and corrective actions should be taken, as necessary.

Fresh GAC units can be obtained from Westates Carbon. Spent carbon units will be removed from the site and regenerated by Westates. GWTP operators must contact Westates to order fresh units and to have spent units removed.

### 5.5 Tank Maintenance

The building sump, transfer tank, equalization tank, and surge tank should be inspected periodically to ensure that they are not leaking. The sump should be checked to ensure that trash does not accumulate.

### 5.6 Strainer Maintenance

Strainers ST-211 and ST-212 are located in the pit area immediately north of the GWTP building. Strainers must be cleaned periodically to ensure that they are not restricted with sediments. The contaminated water being purged through the strainers is under pressure and personal protective equipment (PPE) must be worn.

Air monitoring will be required during initial cleaning activities to verify and document that a hazardous atmosphere does not exist. A hazardous atmosphere is defined as an atmospheric concentration of a substance in excess of the permissible exposure limit (PEL). The PEL for PCE is 25 parts per million (ppm). The PEL for 1,1-DCE is 1 ppm and the PEL for 1,1,1-TCA is 350 ppm.

Initial air monitoring will be performed with a Photoionization Detector (PID) with a 11.7eV lamp in the probe. Background concentrations will be measured with the PID prior to monitoring at the strainer. During strainer maintenance activities, if the PID registers 1 ppm above background while monitoring the worker's breathing zone, then an air sample must be acquired with a pump and sent to the lab for actual chemical verification.

Air monitoring must be documented 2 or 3 times (i.e. 2 or 3 different cleaning events) to verify that the vault does not contain a hazardous atmosphere, or the potential for a hazardous atmosphere, and that air monitoring is no longer required. If a hazardous atmosphere exists, the vault is a permit-required confined space and confined space regulations apply.

The following cleaning procedure is done while the plant is operational and a hazardous atmosphere does not exist within the vault:

1. Put on the following personal protective equipment as a minimum:

   a. SilverShield® gloves

   b. latex boots

   c. safety glasses

   d. rain suit

2. Check flow meters (FQ-201 and FQ-202) to affirm that water is flowing through the lines.

3. Remove caps from blow-off outlets.

4. Open blowdown valves (V-210 and V-211) and allow water to eject into the pit area.

5. Close blowdown valves and recap.

6. Transfer the water to the equalization tank using the dedicated sump pump (P-204).

If a hazardous atmosphere is found to exist within the vault, evacuate the vault area immediately and contact the PNM Safety Department for additional protective steps and/or PPE.

## 6.0 CONTINGENCY PLAN

Since operation of the GWTP involves the treatment of ground water which is contaminated with hazardous substances, a contingency plan is required in the event of an accident and/or exceedances of permissible air emissions or effluent limits. The purpose of the plan is to set forth the actions to be taken in these events.

### 6.1 Accident Contingency Plan

Accidents which may occur during operation of the GWTP include accidental releases of contaminated groundwater to soils and/or surface water, fires and explosions. Accidental releases typically involve piping failure; leakage at pumps, valves and fittings; and tank rupture or overfill. In the event of accidental release of untreated groundwater, the GWTP is to be immediately shut down as described in Section 3.2 of this manual. In the event of a catastrophic release or failure, the system should be shut down using the incoming main circuit breaker (MCB) switch located on the lower left panel of the MCC (See Figure 2.4 in Section 2) which disables the entire system. Upon safe shutdown of the GWTP, standard PNM procedures regarding notification of releases and response to releases must be complied with. Re-start of the may not occur until the release has been mitigated and the effected systems repaired. Approval authority for re-start may also be set forth within standard PNM procedures.

In the event of a fire or explosion involving the GWTP and/or support facilities, the system is to be immediately shut down if possible. Upon shutdown, personnel are to evacuate the facility and implement standard PNM procedures regarding fires and explosions. Since the only doors for the facility are located on the south side of the building, the safest (not necessarily closest) evacuation route should be taken. Re-start of the GWTP may not occur prior to repairing damages incurred as a result of the fire or explosion unless the event did not affect the operability and effectiveness of the GWTP.

### 6.2 Exceedance Contingency Plan

Since limits are imposed on the air emissions and the water effluent, the contingency plans for both streams are discussed.

#### 6.2.1 Exceedance of water effluent limits

As discussed in Section 7.1.4, the effluent from the GWTP is periodically sampled and analyzed to monitor compliance with the permissible discharge limits. Since there is no effluent storage capacity for sampling prior to discharge, the entire GWTP must be shutdown if the contaminant concentrations in the effluent exceed, or present the potential to exceed, the permissible discharge limits. Shut down of the system is to be performed as described in Section 3.2.

The only plausible scenario in which the contaminant concentrations could approach or exceed the permissible limits would be breakthrough involving the GAC unit. Therefore, the corrective action would be to change-out the unit prior to restarting the GWTP. Additionally, the sampling frequency of the GAC unit (GC-601) should be reviewed to determine if the frequency is sufficient to predict breakthrough of GC-601.

### 6.2.2 Exceedance of air pollutant emission limits

Section 7.1.3 discusses the sampling and monitoring requirements for the GWTP offgas. Emissions from the low-profile air stripper are sampled periodically at sample port (SP-303). In the event of an exceedance of the air pollutants emissions limits the GWTP must be shut down as described in Section 3.2. One reason why the emissions limits could be exceeded may be higher concentrations of contaminants in the groundwater than the investigative data showed. The corrective action in this case is to throttle back the groundwater flow rate thereby increasing the air to water ratio and decreasing the emission rate.

## 7.0 SYSTEM SAMPLING AND ANALYSIS

Sampling ports are located throughout the system to allow for collection and analysis of samples to characterize influent and effluent water, and to verify the level of treatment obtained by air stripping and activated carbon adsorption. The objectives of sampling and analysis are to ensure that NMED's specified cleanup goals are achieved, and to provide operational data needed for routine system maintenance. The sampling and documentation shall be done in accordance with the Discharge Plan Approval in Appendix C. The following sections provide sampling and analysis guidance for the system operation.

### 7.1 Sampling

Samples should be collected in discrete events, to provide a data set representative of actual operating conditions at a particular point in time.

### 7.1.1 Sampling documentation

Sampling notebook. All sampling events should be documented in a bound notebook with sequentially numbered pages. The sampling notebook should be kept in the GWTP building. All entries in the notebook should be made in indelible waterproof ink. All sampling events will be recorded on a Person Station groundwater remediation system sampling record sheet. A copy of this sheet can be found in Appendix D. The following items should be recorded in the notebook for each sampling event:

- time and date;
- names of person(s) participating in sample collection;
- sampling location; and
- sampling comments.

Corrections to notebook entries should be made by striking out the information to be corrected with a single line, and writing in the correct information. Corrections should be initialed.

Sample labels. Water samples will be labeled as follows:

- Sampling site: Person Station.
- Sample type: Water.
- Field I.D.: Identify the appropriate sample location; Influent will identify influent streams; Effluent will identify effluent streams.
- Date and time: Identify the date and time the sample was procured.
- Analysis: EPA 8010.
- Preservation: HCl.

Sample labels should be affixed to the sample vial, and as much label information as possible should be filled out prior to sample collection. Sample labels should be filled out in indelible waterproof ink. Pre-printed labels available for groundwater treatment system (GTS) influent, GTS air stripper effluent, and GTS GAC effluent are shown in Figure 7.1.

Air sample labels are pre-attached to the sampling canisters and must be filled out completely prior to shipment.

Chain-of-custody forms. A chain-of-custody (COC) form will be completed, and transferred to the laboratory with the samples. Example COC forms for water and air samples are shown in Figures 7.2 and 7.3. The form must be filled out completely and placed inside a sample cooler (or other appropriate container being used for shipment). The form should be put inside a plastic "zip-lock" bag to protect it when storing the sample with fresh ice. When custody of samples is transferred, the person relinquishing, and the person receiving the samples must sign the COC form.

### 7.1.2 Sample handling

After collection of a water sample, a custody seal should be placed on the vial. The COC seal is placed over the top of the sample vial in such a way that the seal must be broken when the vial top is opened. A COC seal is depicted in Figure 7.4. Water samples will be placed on ice in an insulated cooler immediately after sealing. Water samples should be placed in the cooler to avoid potential breakage during shipping, and may be bubble-wrapped if necessary. The cooler should be of sufficient quality to ensure that a constant temperature of 4°C is maintained until samples are received and stored by the analytical laboratory. When all samples have been placed in the cooler, the tamper-resistant custody seal should be placed across the lid, signed and dated by the sample custodian.

Offgas samples should be shipped in a cooler (or other appropriate shipping container), and packed as to prevent excessive movement. Stripper offgas samples will not be shipped on ice, as condensation of VOCs would degrade sample integrity.

rvice Company of New Mexico

| | |
|---|---|
| n Station | Sample Type: Water |
| ir Stripper Effluent | Date |
| | Time |
| A 8010 | Preservation: HCl |

Public Service Company of New Mexico

| | |
|---|---|
| Sample Site: Person Station | Sample Type: Water |
| Field I.D.: GTS Air Stripper Effluent | Date |
| Analysis: EPA 8010 | Time |
| | Preservation: HCl |

rvice Company of New Mexico

| | |
|---|---|
| n Station | Sample Type: Water |
| S Influent | Date |
| | Time |
| A 8010 | Preservation: HCl |

Public Service Company of New Mexico

| | |
|---|---|
| Sample Site: Person Station | Sample Type: Water |
| Field I.D.: GTS Influent | Date |
| Analysis: EPA 8010 | Time |
| | Preservation: HCl |

rvice Company of New Mexico

| | |
|---|---|
| n Station | Sample Type: Water |
| AC Effluent | Date |
| | Time |
| A 8010 | Preservation: HCl |

Public Service Company of New Mexico

| | |
|---|---|
| Sample Site: Person Station | Sample Type: Water |
| Field I.D.: GTS GAC Effluent | Date |
| Analysis: EPA 8010 | Time |
| | Preservation: HCl |

**FIGURE 7.1**

**PRE-PRINTED SAMPLE LABELS**

Public Service Company of New Mexico
Person Generating Station
Albuquerque, New Mexico

PARSONS ENGINEERING SCIENCE, INC.
Denver, Colorado

AnalyticalTechnologies,Inc., Albuquerque, NM
San Diego • Phoenix • Seattle • Pensacola • Ft. Collins • Portland • Albuquerque

# CHAIN OF CUSTODY

DATE:_____ PAGE____ OF____

ATI LAB I.D.

PLEASE FILL THIS FORM IN COMPLETELY. SHADED AREAS ARE FOR LAB USE ONLY.

PROJECT MANAGER: RON JOHNSON

COMPANY: PUBLIC SERVICE COMPANY OF NEW MEXICO
ADDRESS: ALVARADO SQUARE - 0408
ALBUQUERQUE, NM 87158
PHONE: (505) 241-2998
FAX: (505) 241-2340

BILL TO: SAME
COMPANY:
ADDRESS:
ATTN: RON JOHNSON

ANALYSIS REQUEST

| SAMPLE ID | DATE | TIME | MATRIX | LAB ID | Petroleum Hydrocarbons (418.1) | (MOD 8015) Gas/Diesel | Diesel/Gasoline/BTXE/MTBE (MOD 8015/8020) | BTXE/MTBE (8020) | | | Chlorinated Hydrocarbons (601/8010) | Aromatic Hydrocarbons (602/8020) | SDWA Volatiles (502.1/503.1), 502.2 Reg. & Unreg. | | | Pesticides/PCB (608/8080) | Herbicides (615/8150) | Base/Neutral/Acid Compounds GC/MS (625/8270) | Volatile Organics GC/MS (624/8240) | Polynuclear Aromatics (610/8310) | | | SDWA Primary Standards - Arizona | SDWA Secondary Standards - Arizona | SDWA Primary Standards - Federal | SDWA Secondary Standards - Federal | | | The 13 Priority Pollutant Metals | RCRA Metals by Total Digestion | RCRA Metals by TCLP (1311) | | NUMBER OF CONTAINERS |
|---|---|---|---|---|---|---|---|---|---|---|---|---|---|---|---|---|---|---|---|---|---|---|---|---|---|---|---|---|---|---|---|---|---|
| GTS - INFLUENT | | | W | | | | | | | | X | | | | | | | | | | | | | | | | | | | | | | |
| GTS-AIR STRIPPER EFFLUENT | | | W | | | | | | | | X | | | | | | | | | | | | | | | | | | | | | | |
| GTS-GAC EFFLUENT | | | W | | | | | | | | X | | | | | | | | | | | | | | | | | | | | | | |
| UNM EAST RESERVOIR | | | W | | | | | | | | X | | | | | | | | | | | | | | | | | | | | | | |
| UNM WEST RESERVOIR | | | W | | | | | | | | X | | | | | | | | | | | | | | | | | | | | | | |
| VEW WELL SAMPLE | | | W | | | | | | | | X | | | | | | | | | | | | | | | | | | | | | | |
| PSMW-16 WELL SAMPLE | | | W | | | | | | | | X | | | | | | | | | | | | | | | | | | | | | | |
| | | | | | | | | | | | | | | | | | | | | | | | | | | | | | | | | | |
| TRIP BLANK | | | W | | | | | | | | X | | | | | | | | | | | | | | | | | | | | | | |

| PROJECT INFORMATION | | SAMPLE RECEIPT | |
|---|---|---|---|
| PROJ. NO.: | REMEDIATION | NO. CONTAINERS | |
| PROJ. NAME: | PERSON STATION | CUSTODY SEALS | Y / N / NA |
| P.O. NO.: | | RECEIVED INTACT | |
| SHIPPED VIA: | | RECEIVED COLD | |

PRIOR AUTHORIZATION IS REQUIRED FOR RUSH PROJECTS

(RUSH) ☐24hr ☐48hr ☐72hr ☐1 WEEK (NORMAL) ☐2 WEEK

Comments:
PLEASE PROVIDE DATA ON DISKETTE AS WELL AS HARD COPY

| SAMPLED & RELINQUISHED BY: 1. | RELINQUISHED BY: 2. | RELINQUISHED BY: 3. |
|---|---|---|
| Signature: Time: | Signature: Time: | Signature: Time: |
| Printed Name: Date: | Printed Name: Date: | Printed Name: Date: |
| Company: Phone: | Company: | Company: |

| RECEIVED BY: 1. | RECEIVED BY: 2. | RECEIVED BY:(LAB) 3. |
|---|---|---|
| Signature: Time: | Signature: Time: | Signature: Time: |
| Printed Name: Date: | Printed Name: Date: | Printed Name: Date: |
| Company: | Company: | Analytical Technologies, Inc. |

ATI Labs: San Diego (619) 458-9141 • Phoenix (602) 496-4400 • Seattle (206) 228-8335 • Pensacola (904) 474-1001 • Portland (503) 684-0447 • Albuquerque (505) 344-3777 DISTRIBUTION: White, Canary - ATI • Pink - ORIGINATOR

**FIGURE 7.2**

**WATER SAMPLE COC FORM**

Public Service Company of New Mexico
Person Generating Station
Albuquerque, New Mexico

PARSONS ENGINEERING SCIENCE, INC.
Denver, Colorado

AnalyticalTechnologies,Inc., Albuquerque, NM
San Diego • Phoenix • Seattle • Pensacola • Ft. Collins • Portland • Albuquerque

# CHAIN OF CUSTODY

DATE:_____ PAGE_____ OF_____

ATI LAB I.D.

PROJECT MANAGER: RON JOHNSON

COMPANY: PUBLIC SERVICE COMPANY OF NEW MEXICO
ADDRESS: ALVARADO SQUARE - 0408
ALBUQUERQUE, NM 87158
PHONE: (505) 241-2998
FAX: (505) 241-2340

BILL TO: SAME
COMPANY:
ADDRESS:
ATTN: RON JOHNSON

ANALYSIS REQUEST

| SAMPLE ID | DATE | TIME | MATRIX | LAB ID | Petroleum Hydrocarbons (418.1) | (MOD 8015) Gas/Diesel | Diesel/Gasoline/BTXE/MTBE (MOD 8015/8020) | BTXE/MTBE (8020) | | TO-14 | Chlorinated Hydrocarbons (601/8010) | Aromatic Hydrocarbons (602/8020) | SDWA Volatiles (502.1/503.1), 502.2 Reg. & Unreg. | | | Pesticides/PCB (608/8080) | Herbicides (615/8150) | Base/Neutral/Acid Compounds GC/MS (625/8270) | Volatile Organics GC/MS (624/8240) | Polynuclear Aromatics (610/8310) | | | SDWA Primary Standards - Arizona | SDWA Secondary Standards - Arizona | SDWA Primary Standards - Federal | SDWA Secondary Standards - Federal | | | The 13 Priority Pollutant Metals | RCRA Metals by Total Digestion | RCRA Metals by TCLP (1311) | | NUMBER OF CONTAINERS |
|---|---|---|---|---|---|---|---|---|---|---|---|---|---|---|---|---|---|---|---|---|---|---|---|---|---|---|---|---|---|---|---|---|---|
| VEW - INFLUENT | | | AIR | | | | | | | X | | | | | | | | | | | | | | | | | | | | | | | |
| VEW - GAC EFFLUENT | | | AIR | | | | | | | X | | | | | | | | | | | | | | | | | | | | | | | |
| AIR STRIPPER VENT STACK | | | AIR | | | | | | | X | | | | | | | | | | | | | | | | | | | | | | | |

| PROJECT INFORMATION | | SAMPLE RECEIPT | |
|---|---|---|---|
| PROJ. NO.: | REMEDIATION | NO. CONTAINERS | |
| PROJ. NAME: | PERSON STATION | CUSTODY SEALS | Y / N / NA |
| P.O. NO.: | | RECEIVED INTACT | |
| SHIPPED VIA: | | RECEIVED COLD | |

PRIOR AUTHORIZATION IS REQUIRED FOR RUSH PROJECTS

(RUSH) ☐ 24hr ☐ 48hr ☐ 72hr ☐ 1 WEEK (NORMAL) ☐ 2 WEEK

Comments:
PLEASE PROVIDE DATA ON DISKETTE AS WELL AS HARD COPY

| SAMPLED & RELINQUISHED BY: 1. | RELINQUISHED BY: 2. | RELINQUISHED BY: 3. |
|---|---|---|
| Signature: Time: | Signature: Time: | Signature: Time: |
| Printed Name: Date: | Printed Name: Date: | Printed Name: Date: |
| Company: Phone: | Company: | Company: |

| RECEIVED BY: 1. | RECEIVED BY: 2. | RECEIVED BY:(LAB) 3. |
|---|---|---|
| Signature: Time: | Signature: Time: | Signature: Time: |
| Printed Name: Date: | Printed Name: Date: | Printed Name: Date: |
| Company: | Company: | Analytical Technologies, Inc. |

ATI Labs: San Diego (619) 458-9141 • Phoenix (602) 496-4400 • Seattle (206) 228-8335 • Pensacola (904) 474-1001 • Portland (503) 684-0447 • Albuquerque (505) 344-3777 DISTRIBUTION: White, Canary - ATI • Pink - ORIGINATOR

**FIGURE 7.3**

**AIR SAMPLE COC FORM**

Public Service Company of New Mexico
Person Generating Station
Albuquerque, New Mexico

PARSONS ENGINEERING SCIENCE, INC
Denver, Colorado

| Analytical **Technologies,** Inc.<br>**Environmental Laboratory** | SAMPLE NO. | DATE | SEAL BROKEN BY | DATE |
|---|---|---|---|---|
| | SIGNATURE | | | |
| | PRINT NAME AND TITLE *(Inspector, Analyst or Technician)* | | | |

**FIGURE 7.4**

**COC SEAL**

Public Service Company of New Mexico
Person Generating Station
Albuquerque, New Mexico

**PARSONS ENGINEERING SCIENCE, INC.**
Denver, Colorado

### 7.1.3 Sample analysis

Water samples will be analyzed by EPA Method 8010 and air samples will be analyzed by EPA Method TO-14. These methods provide analysis and will report results for a suite of VOCs.

While system cleanup goals are only specified for 1,1-DCE, 1,1,1-TCA, and PCE the characterization data provided should be reviewed to ensure that no other VOCs are detected at levels of concern.

### 7.1.4 System water sampling

Appropriate sample containers, volumes, and preservation for the laboratory analytical method required are identified in Table 7.1. The preservative has already been added to the sample vials by the laboratory. Sample vials must be filled and immediately capped so that no headspace (air bubble) exists. After sample collection the vial should be inverted to check for presence of an air bubble. If a bubble is present, the sample should be discarded. The vial should also be discarded and a new one obtained. A new sample should then be collected. Samples will not be composited, homogenized or filtered.

**TABLE 7.1**
**CONTAINERS, VOLUMES, PRESERVATIVES, AND HOLDING TIMES FOR GWTP WATER SAMPLES**

| ANALYTICAL METHOD | CONTAINER | VOLUME | PRESERVATIVE | HOLDING TIME |
|---|---|---|---|---|
| | | | | |
| EPA 8010 - | glass VOA vial, | 40 milliliters | hydrochloric acid | 14 days |
| Halogenated Volatile | with septum and | | to pH = 2. | |
| organic compounds | teflon lined | | ship and store on | |
| | screw cap | | ice at 4°C | |
| | | | | |
| | | | | |

To collect a sample from a well or within the GWTP, the sampling port valve should be opened and a volume of approximately 250 milliliters (ml) should be collected in a container to purge the sampling port. The purge water should be disposed in the floor sump. After purging the port, the sample should be collected, by placing the open vial into the flow. The sample port valve should be opened to provide a slow but steady stream into the sample vial. Entraining air and/or splashing the sample flow should be avoided.

Samples from surface waters (i.e. golf course ponds) will be collected so as to minimize the amount of suspended solids in the water sample. Surface water samples will be collected by submerging unpreserved sample containers (or other appropriate container) in the pond. Sample bottles that contain preservative will be filled by first filling an unpreserved sample bottle and transferring the sample into the preserved bottle.

Influent samples will periodically be collected from both wells upstream from the equalization tank. Influent samples from the RCRA cap can be obtained from either SP-205 or SP-215. An influent sample from PSMW-16 can be obtained from SP-214. A composite influent sample will routinely be obtained from SP-224 located immediately downstream from the equalization tank.

Effluent samples can be collected at sampling ports (SP-401, SP-605 and SP-614) located immediately downstream from the air stripper. A effluent sample will routinely be obtained from SP-605. Effluent samples will also be collected routinely at a sampling port (SP-619) located immediately downstream from the GAC unit.

The analytical results from the final effluent sampling port (SP-619) must be evaluated against the specified cleanup goals to ensure compliance. All other effluent analytical results should be used to evaluate the effectiveness of the GWTP system. The data from SP-605 can be compared with influent data to determine the VOC removal efficiency of the air stripper.

### 7.1.5 System air sampling

Air stripper offgas must be sampled to ensure that emissions permit limits are not violated. Semi-quantitative real time sampling will be done with a Photoionization Detector. Samples for more rigorous laboratory analysis will also be collected periodically.

Prior to taking PID measurements, the instrument must be calibrated. The PID is calibrated with ambient air (0 parts per million [ppm] VOCs) and an isobutylene standard gas of appropriate concentration for the range of PID readings expected. Manufacturer's calibration instructions should be followed.

To obtain PID measurements of VOCs in offgas, a short piece of Tygon™ tubing is attached to the sampling port hose barb. A plastic tee connection is attached to the Tygon™, and the PID is connected to the stem of the tee at a right angle to the sampling port, with a second piece of Tygon™ tubing. The sampling port valve is opened and a PID reading is obtained as the offgas stream passes through the tee. The PID reading should be recorded on the GWTP data collection sheet.

Air samples collected for laboratory analysis require the use of evacuated stainless steel (SUMMA™) canisters. A checklist and diagram for using these canisters is provided in Figure 7.5. The canister is connected directly to the sampling port with a 6-inch piece of clean Tygon™ tubing. The gas is transferred by first opening the sampling valve and then opening the canister valve. When the sample is collected the canister valve is closed. The canister is then shipped to the laboratory for analysis.

Both PID and lab samples can be obtained at SP-303.

## 7.2 Quality Assurance/Quality Control Procedures

Quality assurance/quality control (QA/QC) procedures for sample collection include collection of field duplicates and trip blanks; and laboratory analysis of matrix spikes and method blanks.

## FIGURE 7.5

## INSTRUCTIONS FOR TAKING SAMPLES USING SUMMA® CANISTERS
## PUBLIC SERVICE COMPANY OF NEW MEXICO

**Person Generating Station**
**Albuquerque, New Mexico**

Required Equipment:

Evacuated SUMMA® canisters
a 2-7 micron filter
a 1/2" open end wrench
a 9/16" open end wrench
a hose barb adapter to adapt the threaded fitting on the canister to 3/16" Tygon® tubing.

Assembly of the sampling hardware:

1. Remove the brass cap from the canister.
2. Connect the filter to the canister. Tighten the filter to the canister using the 9/16" wrench.
3. Connect the hose barb to the filter.
4. Connect the sample port to the hose barb using 3/16" Tygon® tubing (using as short a connector as possible).
5. Open valve on sample port.

The assembly is now complete, sampling will commence when the valve on the canister (green handle) is opened.

The Final Step

When the sample interval is complete, close the valve (green handle) on the canister and remove the filter. It is not necessary to over-tighten the valve upon closing. Replace the brass cap. Fill out the sampling tracking tag. The canister may now be submitted to the laboratory for analysis.

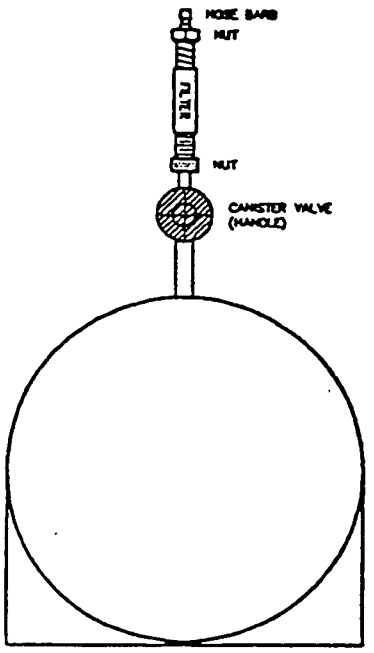

### 7.2.1 QA/QC for field sample collection

Duplicate water samples will be collected and analyzed to assess the precision of the analytical data. One duplicate should be collected from SP-224 (influent after equalization tank) twice per year. Trip blanks will be analyzed to assess the effects of ambient conditions on analytical results. One trip blank (distilled water placed in a sampling vial and provided by the laboratory) will be prepared for each water sampling event. The trip blank will be analyzed by EPA Method 8010.

### 7.2.2 QA/QC for laboratory analysis

Matrix spikes will be prepared in the laboratory and used to establish matrix effects. One matrix spike will be prepared for each water sampling event. The matrix spike will be analyzed by EPA Method 8010. Matrix interferences and biases will be assessed.

Laboratory method blanks will be prepared and analyzed by EPA Method 8010 for each laboratory run of water samples. All samples will be reanalyzed if matrix spike or method blank results fall outside of control limits.

# APPENDIX A

# GWTP DATA COLLECTION SHEET

**GWTP DATA COLLECTION SHEET**

**PUBLIC SERVICE COMPANY OF NEW MEXICO**
**PERSON GENERATING STATION**

**Stripper Train East/West**

| | | CUMULATIVE TOTAL WATER FLOWS | | | | | | AIR FLOWS | | | SYSTEM WATER PRESSURES | | | | | | |
|---|---|---|---|---|---|---|---|---|---|---|---|---|---|---|---|---|---|
| | | FQ-201 | FQ-202 | FQ-1201 | FQ-1202 | FQ-401 | FQ-501 | PI-301 | FI-301 | SP-303 | PI-601 | PI-602 | PI-603 | PI-604 | PI-605 | PI-606 | PI-501 |
| Date | Time | From RCRA well cap | From PSMW-16 | From EW-1 | from Ethicon Wells | Air Stripper effluent | Surge tank effluent | Blower air pressure | Stripper offgas | Stripper offgas PID Reading | Before bag filter BF-601 | Before bag filter BF-602 | After bag filter BF-601 | After bag filter BF-602 | Before carbon unit GC-601 | After carbon unit GC-601 | After surge tank transfer pump P-501 |
| | | gallons | gallons | gallons | gallons | gallons | gallons | In. of $H_2O$ | In. of $H_2O$ | ppm | psi | psi | psi | psi | psi | psi | psi |
| | | | | | | | | | | | | | | | | | |
| | | | | | | | | | | | | | | | | | |
| | | | | | | | | | | | | | | | | | |
| | | | | | | | | | | | | | | | | | |
| | | | | | | | | | | | | | | | | | |
| | | | | | | | | | | | | | | | | | |
| | | | | | | | | | | | | | | | | | |
| | | | | | | | | | | | | | | | | | |
| | | | | | | | | | | | | | | | | | |
| | | | | | | | | | | | | | | | | | |
| | | | | | | | | | | | | | | | | | |
| | | | | | | | | | | | | | | | | | |
| | | | | | | | | | | | | | | | | | |
| | | | | | | | | | | | | | | | | | |
| | | | | | | | | | | | | | | | | | |
| | | | | | | | | | | | | | | | | | |
| | | | | | | | | | | | | | | | | | |
| | | | | | | | | | | | | | | | | | |

# APPENDIX B

# AIR PERMIT

**City of Albuquerque**
P.O. BOX 1293 ALBUQUERQUE, NEW MEXICO 87103

March 16, 1994
CERTIFIED MAIL #P 077 872 704

Ms. Nancy Norem
Senior Engineer
Public Service Co. of New Mexico
Alvarado Square
Albuquerque, NM 87158

Dear Ms. Norem:

Re: PERMIT APPLICATION - #353 AIR STRIPPING / VAPOR EXTRACTION AND TREATMENT SYSTEM

This letter constitutes a permit to Public Service Co. of New Mexico (PNM) pursuant to Section 74-2-7 NMSA 1978 and Albuquerque/Bernalillo County Air Quality Control Regulation (AQCR) 20, *Authority-to-Construct Permits;* to construct and operate an air stripping / vapor extraction and treatment system at Person Generating Station at Broadway and Rio Bravo S.E. in accordance with the application received January 10, 1994.

The Division has performed an analysis to verify the emissions from the facility and dispersion modeling to determine the impact on the ambient air. Based on this analysis and the control measures described in your application, the Division has determined that the provisions of the Air Quality Control Act, the Albuquerque/ Bernalillo County Air Quality Control Regulations and Federal, State and Local regulations and ambient air quality standards will be met. However, in order to assure this, the following conditions have been placed on the permit.

1. Total emissions from all sources at the site shall not exceed 0.75 pound per hour of non-methane hydrocarbons including no more than 0.375 pounds per hour of 111-TCA, 0.375 pounds per hour of PCE and 0.003 pounds. per hour of 11-DCE.

2. All roadways, loading and unloading areas and other areas used by vehicles within or associated with the site, shall be watered and/or otherwise treated to prevent fugitive dust emissions.

3. If the total disturbed area of the site exceeds 0.75 acres a topsoil disturbance permit must be secured, pursuant to Regulation 8 of the Albuquerque/Bernalillo County Air Quality Control Board

Section 74-2-7 "J" NMSA 1978, states that the issuance of a permit does not relieve any person from the responsibility of complying with the provisions of the Air Quality Control Act and any applicable regulations of the board. Any conditions placed upon a permit by the Department shall be enforceable to the same extent as a regulation of the Board.

Section 76-2-7 "K" NMSA 1978, provides that if the Division issues a permit with conditions, and if the applicant is dissatisfied with the action taken by the Division, the applicant may

a hearing before the Albuquerque/Bernalillo County Air Quality Control Board. The must be made in writing to the Director of the Environmental Health Department hirty days after the receipt of the permit.

AQCR 20.09 provides that the Division may cancel this permit if the construction is not commenced within one year from the date of issuance, or if during the construction work is suspended for a total of one year.

AQCR 20.10 requires the permitted source to notify the Division in writing of:

A. The anticipated date of the initial start-up of a source not less than thirty days prior to the projected date;

B. actual date of initial start-up of a source within fifteen days after the start-up date;

C. change of owner or operator within fifteen (15) days of any such change, if any.

D. an updated emissions inventory for the source together with descriptions of any reconfigurations of process technology and air pollution control equipment, every two years from the date of issuance of this permit. A letter indicating that no such change has occurred, if such is the case, shall be sufficient to comply with this requirement.

20.11 requires a performance test conducted within sixty days after achieving maximum ion, but not later than 180 days after initial start-up. The department shall be notified at o weeks prior to the test so that our observer can be present during the test. For the s of this permit the department is requesting 2 (two) tests of the emissions from this site. t should be performed during the initial few days of operation to determine maximum n potential and the second should be performed after the site has stabilized into its m emissions configuration.

mit and conditions apply in the event of any change in control or ownership of the In the event of any such change in control or ownership, the permittee should notify the ing owner of the permit and conditions.

ou very much for your cooperation with the Division. If you have any questions, please to call me at 768-1957.

ed and issued this 16th day of March, 1994.

Sincerely,

Roger A. Polisar
Environmental Health Specialist II
Air Pollution Control Division

d
mit file
ding file

# APPENDIX C

# DISCHARGE PLAN APPROVAL

CERTIFIED MAIL - RETURN RECEIPT REQUESTED

F NEW MEXICO
ENT DEPARTMENT

January 15, 1995

Jeff Sterba, Senior Vice President
Power Supply Resources
Public Service Company of New Mexico
Alvarado Square
Albuquerque, NM 87158

RE: Discharge Plan Approval, Person Station, DP-1006

Dear Mr. Sterba:

Pursuant to Water Quality Control Commission (WQCC) Reg. 3-109, the discharge plan application for DP-1006, submitted by Jerry Godwin for the discharge of 288,000 gallons per day of treated ground water from the Person Generating Station is hereby approved. The facility is located in the City of Albuquerque's South Valley in Section 4, T9N, R3E, Bernalillo County. In approving this discharge plan, the New Mexico Environment Department (NMED) has determined that the requirements of WQCC Reg. 3-109.C have been met.

The approved Person Generating Station treatment and disposal system is briefly described as follows:

Ground water below the Person Station contaminated with 1,1,2,2 Tetrachloroethylene (PCE), 1,1 Dichloroethylene (1,1-DCE), and 1,1,1 Trichloroethane (1,1,1-TCA) will be recovered and treated through an air stripper and thence trough a liquid-phase carbon absorption system to reduce each of the above VOC's to concentration levels not to exceed 5 parts per billion. Treated water will be pumped via pipeline to the University of New Mexico's South Golf Course and discharged to two synthetically-lined irrigation storage lagoons located on the golf course. Treated water from PNM's Person Station will constitute between 5 and 10 per cent of the water stored in the lagoons. Stored water will be applied to the golf course by spray irrigation.

The approved discharge plan consists of the materials and letters submitted by PNM and Metric Corporation dated June 13, September 14, October 26, and November 30, 1994. The

y Johnson
overnor
k Weidler
Secretary
Runnels Building
St. Francis Drive
. Box 26110
Fe, NM 87502
927-2850
5) 827-2836

discharge shall be managed in accordance with the approved plan and is subject to the conditions listed below.

However, approval of this discharge plan does not relieve you of your responsibility to comply with any other applicable federal, state and/or local laws and regulations, such as zoning requirements and nuisance ordinances.

**CONDITIONS FOR APPROVAL**

This discharge plan approval is subject to the following conditions for the following reasons:

1. PNM shall monitor the influent and effluent daily for the VOC's listed above using EPA methods 601/8010 for the first week after remediation commences, thence weekly for four weeks, and then monthly thereafter. Beginning with the initial monthly sampling, and monthly thereafter, PNM shall also sample the two irrigation lagoons at the UNM golf course and analyze for the above VOC's. Monthly reports shall be submitted to the Ground Water Section quarterly by February 15, May 15, August 15, and November 15 of each year. PNM shall copy monitor reports to: Terri Davis, NMED Hazardous & Radioactive Materials Bureau.

   The reason for this condition is to comply with § 3-109.C.3.c.(2) and 3-107 of the WQCC regulations.

2. PNM shall obtain a 24 hour composite sample of the effluent during the first week of discharging and analyze the sample for Manganese, Iron, Sulfate, Chloride, Nitrate as nitrogen, and TDS. If any of the above parameters exceed WQCC standards, PNM shall cease discharging until the treatment system is modified such that the parameters exceeding WQCC standards are treated to below WQCC standards.

   The reason for this condition is to comply with WQCC regulation 3-103.

**SPECIFIC REQUIREMENTS**

The terms and conditions of this approval contain specific requirements which are summarized below.

1. PNM will treat up to 288,000 gallons per day of VOC contaminated ground water from below their Person

Generating Station through an air stripper and liquid phase carbon absorption system.

2. PNM will pump treated ground water to the UNM South Golf Course for spray irrigation of approximately 100 acres as specified in PNM's "PIPELINE CONSTRUCTION AND WATER SUPPLY AGREEMENT' with UNM dated October 27, 1994.

3. PNM will monitor and report as follows:

   a) Record monthly effluent volumes discharged to the golf course using a totalizing flow meter. Records will be submitted with the quarterly reports.

   b) Sample and report as outlined in conditions # 1 and 2 under **CONDITIONS FOR APPROVAL** above.

4. If any portion of the treatment and/or delivery system fails to decrease contaminant concentrations to 5 parts per billion or less and/or deliver effluent to the golf course, PNM will shut down the recovery wells and not reactivate until the problems are corrected and contaminant levels are below requirements.

5. After cessation of operations PNM will close the facility as described in section 19 in their discharge plan application.

## GENERAL DISCHARGE PLAN REQUIREMENTS

In addition to any other requirements provided by law, approval of discharge plan, DP-1006, is subject to the following general requirements:

### Monitoring and Reporting

Monitoring and reporting shall be as specified in the discharge plan and supplements thereto. These requirements are summarized on the attached sheet(s). Any inadvertent omissions from this summary of a discharge plan monitoring or reporting requirement shall not relieve you of responsibility for compliance with that requirement.

### Record Keeping

1. The discharger shall maintain at the facility, a written

record of ground water and waste water quality analyses.

The following information shall be recorded and shall be made available to the NMED upon request.

a. The dates, exact place and times of sampling or field measurements.

b. The name and job title of the individuals who performed the sampling or measurements.

c. The dates the analyses were performed.

d. The name and job title of the individuals who performed the analyses.

e. The analytical techniques or methods used.

f. The results of such analyses, and

g. The results of any split sampling, spikes or repeat sampling.

2. The discharger shall maintain a written record of any spills, seeps, and/or leaks of effluent, leachate and/or process fluids not authorized by this discharge plan.

3. The discharger shall maintain a written record of the operation, maintenance and repair of facilities/equipment used to treat, store and/or dispose of waste water; to measure flow rates; and/or to monitor water quality. This will include repairs, replacement or calibration of any monitoring equipment and repairs or replacement of any equipment used in the Person Generating Station remediation system.

4. The discharger shall maintain a written record of the amount of effluent discharges to the UNM Golf Course.

<u>Inspection and Entry</u>

In accordance with § 74-6-9.B & E NMSA 1978 and WQCC Reg. 3-107.D., the discharger shall allow the Secretary or her authorized representative, upon the presentation of credentials, to:

1. Enter at regular business hours or at other reasonable times upon the discharger's premises or where records must be kept under the conditions of this discharge plan.

2. Inspect and copy, during regular business hours or at other reasonable times, any records required to be kept under the conditions of the discharge plan.

3. Inspect, at regular business hours or at other reasonable times, any facility, equipment (including monitoring and control equipment), practices or operations regulated or required under this discharge plan.

4. Sample or monitor, at reasonable times for the purpose of assuring discharge plan compliance or as otherwise authorized by the New Mexico Water Quality Act, any effluent at any location before or after discharge.

**Duty to Provide Information**

In accordance with § 74-6-9.B NMSA 1978 and WQCC Reg. 3-107.D., the discharger shall furnish to the NMED, within a reasonable time, any relevant information which it may request to determine whether cause exists for modifying, terminating and/or renewing this discharge plan or to determine compliance with this plan. The discharger shall furnish to the NMED, upon request, copies of records required to be kept by this discharge plan.

**Spills, Leaks and Other Unauthorized Discharges**

This approval authorizes only those discharges specified in the discharge plan. Any unauthorized discharges violate WQCC Reg. 3-104, and must be reported to the NMED and remediated as required by WQCC Reg. 1-203. This requirement applies to all seeps, spills, and/or leaks discovered from the Person Generating Station remediation system.

**Retention of Records**

The discharger shall retain records of all monitoring information, including all calibration and maintenance records, copies of all reports required by this discharge plan, and records of all data used to complete the application for this discharge plan, for a period of at least five years from the date of the sample collection, measurement, report or application. This period may be extended by request of the Secretary at any time.

**Enforcement**

Failure to grant the Secretary or her authorized representative access to the records required to be kept by this discharge plan or to allow an inspection of the discharge facilities or to the collection of samples is a violation of this discharge plan and the WQCC Regulations. Such violations as well as other violations of the discharge plan, may subject the discharger to a compliance order, a compliance order assessing a civil penalty or an action in district court pursuant to § 74-6-10 NMSA 1978, and/or modification or termination of this discharge plan pursuant to § 74-6-5.L NMSA 1978. Penalties assessed as part of a compliance order shall not exceed $15,000 per day for violations of the terms of this permit or the requirements of § 74-6-5 NMSA 1978, and shall not exceed $10,000 per day for violations of other sections of the Water Quality Act.

**Modifications and/or Amendments**

The discharger shall notify NMED, pursuant to WQCC Regs. 3-107.C, of any modifications or additions to the Person Generating Station's remediation system, including any increase in waste water flow rate or waste water storage and disposal management changes to the system as approved under this discharge plan. The discharger shall obtain NMED's approval, as a discharge plan modification, prior to any increase in the quantity or concentration of constituents in the leachate above those approved in this plan. Please note that WQCC Regs. 3-109.E and F provide for possible future amendment of the plan.

**Other Requirements**

Please be advised that the approval of this plan does not relieve PNM of liability should your operation result in actual pollution of surface or ground water which may be actionable under other laws and/or regulations.

**RIGHT TO APPEAL**

If PNM is dissatisfied with this action taken by NMED, PNM may file a petition for hearing before the WQCC. This petition shall be in writing to the Water Quality Control Commission within thirty (30) days of the receipt of this letter. Unless a timely request for hearing is made, the decision of the NMED shall be final.

**TRANSFER OF DISCHARGE PLAN**

Prior to any transfer of ownership, the discharger shall provide the transferee a copy of the discharge plan, including a copy of this approval letter and shall document such to the NMED.

Jeff Sterba
DP-1006
January 15, 1995
page 7

**PERIOD OF APPROVAL**

Pursuant to WQCC Reg. 3-109.G.4., this discharge plan approval is for a period of 5 years. This approval will expire January 15, 2000 and you must submit an application for renewal at least 120 days before that date.

Sincerely,

Marcy Leavitt, Chief
Ground Water Protection &
Remediation Bureau

ML/RO/ro

Enclosures: Discharge Plan Summary Sheet

cc: Garth Graves, NMED District I Manager
Dan Vigil, NMED HPM, Albuquerque
Terri Davis, Geologist, H&RMB
Ron Johnson, PNM, Alvarado Square, Albuquerque 87158
Gary Richardson, Metric Corp., 8429 Washington Place, Albuquerque, NM 87113

NMED, GROUND WATER SECTION, DISCHARGE PLAN SUMMARY

ge Plan Number..... 1006
port Generated..... 11-JAN-95
eviewer..... RICHARD OHRBOM

Responsible Party. JEFF STERBA SR. V.P. 848-2838
..... PUBLIC SERVICE CO OF NM
ALVARADO SQUARE
ALBUQUERQUE NM 87158

y..... PNM PERSON STATION-UNM GOLF COURSE

---

Waste Type..... INDUSTRIAL GENERATING STATION
nt..... HYDROCARBON REMEDIATION AIR STRIPPER
ge..... LAND APPLICATION RECREATION
ge Location..... UNM SOUTH GOLF COARSE

---

tion Received..... 13-JUN-94
Notice Published... 18-JUL-94
ge Plan Approved... 15-JAN-95
ge Plan Expires.... 15-JAN-00

Discharge Volume.. 288000 gpd
Depth to GW..... 265 feet
TDS..... 250 mg/l

---

ing Reports due.... 15-FEB 15-MAY 15-AUG 15-NOV

| g Annual y Frequency | No. of Sites | Sampling Description |
|---|---|---|
| 12 | 1 | Monthly volume of effluent to UNM, report quarterly |
| 12 | 4 | VOC's, Influent, Effluent, and Golf Course Ponds. Report Quarterly |

If this space is checked, monitoring requirements are summarized lained in more detail on the attached sheet. Any inadvertent on from this summary does not relieve the discharger of siblility for compliance with that requirement.

ll monitoring reports or correspondence to:

RICHARD OHRBOM
Ground Water Section
Environment Departmen
1190 St. Francis Dri
Santa Fe NM 87503
(505) 827-2900

*State of New Mexico*
*ENVIRONMENT DEPARTMENT*
*Ground Water Protection and Remediation Bureau*
*Harold Runnels Building*
*1190 St. Francis Drive, P.O. Box 26110*
*Santa Fe, New Mexico 87502*
*(505) 827-2918 phone*
*(505) 827-2965 fax*

*GARY E. JOHNSON*
*GOVERNOR*

*MARK E. WEIDLER*
*SECRETARY*

*EDGAR T. THORNTON, III*
*DEPUTY SECRETARY*

**CERTIFIED MAIL - RETURN RECEIPT REQUESTED**

March 25, 1996

Ron D. Johnson, Sr. Environmental Scientist
Public Service Company of New Mexico
Alvarado Square MS 0408
Albuquerque, NM 87158

**RE: DISCHARGE PLAN AMENDMENT APPROVAL, DP-1006, PNM PERSON STATION**

Dear Mr. Johnson:

Pursuant to Water Quality Control Commission (WQCC) Reg. 3109, the application for amendment for DP-1006, submitted by you for the amendment to the approved treatment and disposal system at PNM's Person Station is hereby approved, subject to the specific requirement listed below. The discharge plan was approved on January 15, 1995. The facility is located in Albuquerque's South Valley at the intersection of Rio Bravo and Broadway in Section 4, T9N, R3E, Bernalillo County. In approving this discharge plan amendment, the New Mexico Environment Department (NMED) has determined that the requirements of WQCC Reg. 3109.C have been met.

The approved discharge plan for the PNM Person Station is briefly described as follows:

Ground water below the PNM Person Station contaminated with 1,1,2, Tetrachloroethylene (PCE), 1,1 Dichloroethylene (1,1-DCE), and 1,1,1 Trichloroethane (1,1,1-TCA) is recovered and treated through an air stripper and thence through a liquid-phase carbon absorption system to reduce each of the above VOC's to concentration levels not to exceed 5 parts per billion. Treated water is pumped to the University of New Mexico's South Golf Course and discharged to two synthetically-lined irrigation storage lagoons located on the golf course. Treated water from PNM's Person Station is commingled with

Johnson
5
25, 1996

tion water and constitutes between 5 and 10 per cent of the stored in the lagoons.

proved amendment to the treatment and disposal system of Person Station is briefly described as follows:

d treatment system will inject 35 mg/l of concentrated c acid into the influent stream. The resultant pH of the t will be lowered from 7.5 to approximately 7.1. After through the air stripper the pH will rise to approximately opposed to the current 8.1. The reduced pH of the influent should be sufficient to prevent the formation of calcium te precipitation.

, approval of this amendment to your discharge plan does not you of your responsibility to comply with any other ons or requirements of the approved discharge plan, DP- r any other applicable federal, state, and/or local laws and tions, such as zoning requirements and nuisance ordinances.

**C REQUIREMENTS**

owing specific requirement shall be added to the specific ments of original discharge plan approved on January 15, pecific requirements 1 thru 5) and the amendment to DP-1006 d on November 7, 1995 (specific requirement 6):

M will inject concentrated sulfuric acid into the influent ream at a rate not to exceed 35 mg/l.

**EQUIREMENTS**

be advised that approval of this discharge plan amendment t relieve PNM of liability should your operation result in pollution of surface or ground water which may be actionable other laws and/or regulations.

**OF APPROVAL**

endment approval expires on January 15, 2000, the same date original plan, and you should submit an application for at least 120 days before that date.

If you have any questions, please contact Richard Ohrbom of the Ground Water Pollution Prevention Section staff at 827-0219.

Sincerely,

Marcy Leavitt, Chief
Ground Water Quality Bureau

ML/RO/ro

cc: Garth Graves, District Manager, NMED District I
Gary Richardson, Metric Corporation, 8429 Washington, Albuquerque, NM 87113

# APPENDIX D

# GROUNDWATER REMEDIATION SYSTEM SAMPLING RECORD

# Person Station Groundwater Remediation System
# Sampling Record

| Date | Collected By | GTS Influent (Time) | GTS Air Stripper Effluent (Time) | GTS GAC Effluent (Time) | Other (Location and Time) | Other (Location and Time) | Comments |
|---|---|---|---|---|---|---|---|
| | | | | | | | |
| | | | | | | | |
| | | | | | | | |
| | | | | | | | |
| | | | | | | | |
| | | | | | | | |
| | | | | | | | |
| | | | | | | | |
| | | | | | | | |
| | | | | | | | |
| | | | | | | | |
| | | | | | | | |
| | | | | | | | |
| | | | | | | | |
| | | | | | | | |

# APPENDIX E

# GWTP O&M MANUAL NOTES

| GWTP O&M Manual Notes | | |
|---|---|---|
| Name | Section | Comment(s) |
| | | |

| GWTP O&M Manual Notes | | |
|---|---|---|
| Name | Section | Comment(s) |
| | | |

| GWTP O&M Manual Notes | | |
|---|---|---|
| Name | Section | Comment(s) |
| | | |

| GWTP O&M Manual Notes | | |
|---|---|---|
| Name | Section | Comment(s) |
| | | |

| GWTP O&M Manual Notes | | |
|---|---|---|
| Name | Section | Comment(s) |
| | | |

**TO VIEW THE MAP AND/OR MAPS WITH THIS DOCUMENT, PLEASE CALL THE HAZARDOUS WASTE BUREAU AT 505-476-6000 TO MAKE AN APPOINTMENT**