safety-kleen®

RECEIVED
SEP 2 2 1987
HAZARDOUS WASTE SECTION

RECEIVED
SEP 2 2 1987
HAZARDOUS WASTE SECTION

Certified Mail - Return Receipt Requested

September 22, 1987
EJJ 87-319

Mr. Boyd Hamilton
Hazardous Waste Section
New Mexico Environmental Improvement Division
P.O. Box 968
Santa Fe, NM 87504-0968

Subject: Farmington Service Center (NMD 980698849)
Part B Permit Application

Dear Mr. Hamilton:

Pursuant to 40 CFR 270.10, Safety-Kleen Corp. is submitting a Part B permit application to store hazardous wastes in a tank and in containers at its facility in Farmington. The enclosed contains the text and support documents (including a revised Part A permit application) necessary to meet the requirements set forth in the hazardous waste regulations.

If you have any questions or require further documentation, please contact me on extension 2246.

Sincerely,

Ellen J. Jurczak, P.E.
Environmental Engineer/
Permits Manager

EJJ/dfs

Enclosures

777 BIG TIMBER ROAD ELGIN, ILLINOIS 60123 PHONE 312/697-8460 TELEX 910 251 4479

STORAGE FACILITY

PERMIT APPLICATION

SAFETY-KLEEN CORP. SERVICE CENTER

FARMINGTON, NEW MEXICO

NMD 980698849

Prepared by: SAFETY-KLEEN CORP.

September 14, 1987

CERTIFICATION STATEMENT

Farmington, New Mexico Service Center

NMD 980698849

The undersigned, being a vice president of Safety-Kleen Corp., the permit applicant, certifies under penalty of law that this document and all attachments were prepared under my direction or supervision in accordance with a system designed to assure that qualified personnel properly gather and evaluate the information submitted. Based on my inquiry of the person or persons who manage the system, or those persons directly responsible for gathering the information, the information submitted is, to the best of my knowledge and belief, true, accurate, and complete. I am aware that there are significant penalties for submitting false information, including the possibility of fine and imprisonment for knowing violations.

David A. Dattilo — 9/14/87
David A. Dattilo
Vice President, Sales and Service
Date

Scott E. Fore — 9/15/87
Scott E. Fore
Vice President, Environment, Health and Safety

ATTESTATION

The undersigned, attesting witness to the Certification Statement and this document dated September 14, 1987, of which this affidavit is a part, states that I am personally responsible for the preparation of the document, that I personally gathered the information contained herein, and further that the information, to the best of my knowledge and belief, is true, accurate and complete.

Paula M. Ventura — September 14, 1987
Paula M. Ventura
Environmental Permit Writer
Date

CONTENTS

Section	Page
1.0 **FACILITY DESCRIPTION**	1
Abstract	1
1.1 Description of Business Activity	3
1.1.1 Parts Cleaner Service	4
1.1.2 Dry Cleaner Service	5
1.2 Description of the Facility	5
1.2.1 Regional Description	6
1.2.2 Waste Management Practices	9
2.0 **WASTE ANALYSIS PLAN**	11
Abstract	11
2.1 Description of Wastes	12
2.1.1 Wastes Resulting from the Parts Washer Service	12
2.1.2 Wastes Resulting from the Dry Cleaner Service	14
2.2 Quality Control Procedures	14
2.2.1 Parts Washer Service	15
2.2.2 Dry Cleaner Waste Collection Service	17
2.3 Waste Analysis at the Recycle Center	18
2.4 Waste Analysis Plan Update	18
3.0 **PREPAREDNESS AND PREVENTION PLAN**	19
Abstract	19
3.1 Security Measures	20
3.2 Inspection Procedures	20

3.3 Facility Design 24

3.3.1 Tank Storage 24
3.3.2 Drum Storage 25

3.4 Plant Operations -- Potential Spill and Fire Sources and Control Procedures 26

3.4.1 Potential Minor Spill Sources 26
3.4.2 Potential Major Spill Sources 28
3.4.3 Potential Fire Sources 29
3.4.4 Tank Evaluation and Repair Plan 31
3.4.5 External Factors 31

3.5 Internal and External Communications and Alarm Systems 32

4.0 **CONTINGENCY PLAN** 34

Abstract 34

4.1 Purpose 35

4.2 Emergency Coordinator Responsibilities 35

4.2.1 Responsibilities During an Emergency 36
4.2.2 Remedial Action Responsibilities 38
4.2.3 Reporting Responsibilities 38
4.2.4 Chain of Command 38
4.2.5 Government Agencies and Local Authorities to be Notified 40

4.3 Emergency Response Procedures 42

4.3.1 Minor Spills 42
4.3.2 Major Spills 44
4.3.3 Fire Control Procedures 45

4.4 Evacuation Plan 47

4.5 Arrangements with Emergency Response Contractors 47

4.6 Pollution Incident History 48

4.7 Implementation Schedule 48

4.8 Availability and Revision of the Contingency Plan 48

5.0 **PERSONNEL TRAINING** 50

Abstract 50

5.1 Outline of Training Program 51

5.2 Organization Structure and Job Descriptions 51

5.2.1 Branch Manager 51
5.2.2 Regional Manager 52
5.2.3 Environmental Affairs Department 53

5.3 Description of the Training Program 54

5.3.1 Training of New Branch Managers 55
5.3.2 Annual Training 55

5.4 Training Records 56

6.0 **CLOSURE PLAN** 57

Abstract 57

6.1 Purpose 58

6.2 Aboveground Tank and Associated Piping 58

6.2.1 Removal of the Waste Material and Opening of the Tank 59
6.2.2 Removal of Residual Waste and Cleaning of the Tank 60
6.2.3 Removal of the Tank 64

6.3 Drum Storage Area in Warehouse 65

6.4 Solvent Return and Fill Station 66

6.5 Facility Closure Schedule and Certification 66

APPENDICES

A PART A APPLICATION

B PROCESS FLOW DIAGRAMS

Safety-Kleen Solvent Use and Regeneration Loop
Unit Process for the Handling of Spent Mineral Spirits
Unit Process for the Handling of Spent Immersion Cleaner/ Dry Cleaning Waste

C MAPS AND FACILITY DRAWINGS

Topographic Map
Aerial Photograph with Contours 1" = 200'
100-Year Flood Plain Map
Water Main Map
Storm Drainage Map
Wind Rose
Site Plan
Floor Plan

D ANALYTICAL DATA

Analyses of Spent Mineral Spirits
Analyses of Mineral Spirits Dumpster Sediment
Analyses of Spent Immersion Cleaner (4 pages)
Analyses of Dry Cleaner Still Bottoms (3 pages)
Analyses of Dry Cleaner Filter Residue (3 pages)
Mineral Spirits Specifications
Immersion Cleaner Specifications
Dry Cleaner Perchloroethylene Specifications
Information on Analyses Performed at Recycle Center (4 pages)

E EQUIPMENT INFORMATION

Facility Inspection Record and Procedure
Emergency Equipment List
Tank Details (D 10760)
High Level Alarm System Installation Details (D 11533)
High Level Alarm System Installation Information (D 11534)
Dock and Dike Details (D10238)
Concrete Construction Details (D 11322)
Steel Drum Construction Details (4 pages)
Dry Cleaning Drum Construction Details (3 pages)
Dry Cleaning Box Construction Details (11 pages)

F EMERGENCY INFORMATION

Emergency Information for Service Center
Employees' Functions During an Emergency
Letters to Local Authorities (3 pages)
Safety-Kleen Corporate Policies on Safety and Emergency Response (18 pages)
Spill Report Telephone Log

G TRAINING INFORMATION

Organization Charts
List of Service Center Employees
Job Descriptions (2 pages)
Trainer Resumes (9 pages)
Training Plan Outlines (4 pages)
Training Record Forms (3 pages)

H FINANCIAL REQUIREMENTS

Closure Schedule
Closure Cost Estimate (3 pages)
Financial Assurance Documentation (17 pages)
Certificate of Liability Insurance
Safety-Kleen 1986 Annual Report

FACILITY DESCRIPTION

ABSTRACT

CORPORATE HEADQUARTERS:	Safety-Kleen Corp. 777 Big Timber Road Elgin, IL 60123 312/697-8460
RESPONSIBLE OFFICIALS:	David A. Dattilo Vice President, Sales and Service Scott E. Fore Vice President, Environment, Health and Safety
FACILITY ADDRESS:	Safety-Kleen Corp. (7-008-21) 4200 A Hawkins Rd. Farmington, New Mexico 87401
TELEPHONE NUMBER:	502/327-9070
U.S. EPA I.D. NUMBER:	NMD 980698849
GEOGRAPHIC LOCATION:	36° 44' 20" N 108° 14' 11" W
OWNER:	Comet Corp. 1215 Brentwood Circle Farmington, New Mexico 87401
DATE OPERATIONS BEGAN:	January 1, 1981

DESCRIPTION OF ACTIVITIES: This facility is an accumulation point for spent solvents generated by Safety-Kleen customers, the majority of whom are small quantity generators. All wastes are ultimately shipped to a Safety-Kleen recycling facility or a contract reclaimer and then returned to the Company's customers as product.

PROPERTY DESCRIPTION: .80 acres with the following structures:

a. one building with offices and a warehouse for container storage;

b. two aboveground storage tanks (one for product and one for spent solvent) with concrete diking; and

c. one loading dock with a solvent return and fill station.

FACILITY TYPE: Storage in an aboveground tank (S02) and in containers (S01)

STORAGE UNIT	CAPACITY (GAL.)	SECONDARY CONTAINMENT(GAL.)	MATERIAL TO BE STORED
Tank	12,600	18,275	Spent Mineral Spirits Solvent (D001, D008)
Container Storage--Warehouse	2,880	448.8	Dumpster Sediment (D001, D006, D008) Spent Immersion Cleaner (F002, F004) Dry Cleaning Waste (F002)

1.0 FACILITY DESCRIPTION

1.1 DESCRIPTION OF BUSINESS ACTIVITY

Safety-Kleen Corp. is an international service-oriented company whose customers are primarily engaged in automotive repair, industrial maintenance and dry cleaning. The company has been operating since 1968 offering solvent collection and reclamation services for its 350,000 customers, more than 99% of whom generate less than 1000 kilograms (2200 pounds) per month. In 1986, Safety-Kleen reclaimed more than 30 million gallons of spent solvent.

Currently, Safety-Kleen offers five services, three of which involve the accumulation and storage of spent solvent at 164 service centers in 46 states. These wastes are shipped from the service centers to one of seven Safety-Kleen recycle centers or to an independent reclaimer and are then returned to customers as usable product. A unique feature of this system is that Safety-Kleen retains ownership of the parts cleaning machines and the solvent. This "closed loop" system allows the Company to maintain control of the solvent except while it is in use at the customer's place of business. A description of each of these three services follows.

1.1.1 Parts Cleaner Service

The original service offered by the Company in 1968 was the parts cleaner service and it remains the primary business activity. This service involves the leasing of a small parts degreasing unit which consists of a sink affixed to a 16- or 30-gallon drum containing Safety-Kleen 105 Solvent (mineral spirits). On a regularly scheduled basis, a Safety-Kleen sales representative cleans and inspects the parts washer machine and replaces the drum of used solvent with one of clean product. Each sales representative performs about fifteen of these services per day, collecting the drums of used solvent on a route van.

At the end of each day, the solvent is transferred from the drums to a storage tank at the service center and drums of product are prepared for the next day's services. Periodically, a tanker truck is dispatched from one of the recycle centers to deliver a load of clean solvent and collect the spent solvent at the service center. Two-thirds of the solvent used by Safety-Kleen customers has been reclaimed with the remainder being purchased from a vendor.

Safety-Kleen has also established a parts cleaner service for users who own their machines. This service, known as the Customer Owned Machine Service, provides a solvent reclamation service to these customers regardless of machine model.

A second type of parts washer, the immersion cleaner, is available for the removal of varnish and gum from such things as carburetors and transmissions. This machine consists of an immersible basket with an agitator affixed to a 16-gallon drum containing a chlorinated solvents/cresylic acid blend. The spent solvent remains in the drum after delivery to the service center where it is stored in a contained area of the warehouse. Periodically, a box trailer truck is dispatched from a recycle center to deliver drums of fresh solvent and collect the drums of spent solvent for reclamation.

1.1.2 Dry Cleaner Service

In 1984, Safety-Kleen began offering a service for the collection of filter cartridges and still bottoms contaminated with dry cleaning solvents (usually perchloroethylene). These wastes are drummed or boxed on the customer's premises and are periodically collected by a sales representative. The drummed waste is accumulated in a contained area of the warehouse for shipment to a Safety-Kleen recycle center. About 35% of this waste is returned to dry cleaners as usable product.

1.2 DESCRIPTION OF THE FACILITY

The Farmington service center has been operating as a storage facility since January 1, 1981. The facility consists of the following structures:

a. a 1,530 square foot warehouse with offices and a contained area for drum storage;

b. two 12,600 gallon above-ground storage tanks, with diking, for clean and spent solvent; and

c. a solvent return and fill station with a loading dock.

Descriptions of the surrounding area and of waste management practices at the service center follow. Applicable maps and facility drawings are in Appendix C.

1.2.1 Regional Description

The Farmington Service Center is located 600 feet northeast of the intersection of Troy King Road and West Main Street (U.S. Hwy 550) in San Juan County. This area is zoned industrial and to the best of Safety-Kleen's knowledge, no easements or title, deed or usage restrictions exist which may conflict with operations at this site.

The western part of San Juan County is the Navajo Indian reservation. Eastern San Juan County, the location of Farmington, has a total area of 2,182,520 acres or 3,410 square miles. The total population of the area is approximately 50,000 with about 34,000 in Farmington. The major industries in Farmington are involved in the development of gas, oil and coal resources. Abundant rangeland contributed to the growth of the area

through cattle raising and farming, however, this industry has largely declined.

Farmington has a continental climate with an average annual precipitation of 6 inches and total annual snowfall of 9 inches. The average temperature in winter is 44° F and the average summer temperature is 71° F. The average daily temperature range is 33 degrees. An average of 40 thunderstorms occur each year and prevailing winds are east-west.

San Juan County is in the San Juan Basin part of the Navajo section of the Colorado Plateau physiographic province. This area is a structural depression containing deep Tertiary till on rocks of late Cretaceous age. Farmington is located in the alluvial fan in the entrenched San Juan and Animas Rivers. The service center is not in the flood plain of either river. The elevation at the site is 5,470 feet above sea level. The San Juan River provides the principal drainage route for the area and the Animas River is its main tributary.

The soil in the area of the service center is the Avalon sandy loam. This is a deep well-drained soil on mesas and plateaus which formed in alluvial and eolian material derived from sandstone and shale. This soil is moderately permeable with slopes ranging from 5 to 8 percent.

The city of Farmington obtains its water primarily from the Animas River through two pump stations. Pump station 1 is located about two miles east of Farmington and pump station 2 and the Bee Line reservoir are

several miles northeast of Farmington. Standby water is obtained from a pump station several miles south of Farmington on the San Juan River. The service center obtains water from the city of Farmington via a 6" water line on Hawkins Road. A drop inlet to the city storm sewer system is located approximately 500 feet west of the service center. Sewage is collected in a septic tank.

There are no known oil or gas wells within a mile of the service center. No parks. schools, wetlands or critical habitats exist within one mile of the service center.

The non-building areas of the facility are paved with asphalt, concrete or gravel, as noted on the Site Plan in Appendix C. The majority of the vehicular traffic and loading/unloading operations occur at and near the return and fill station and this area is paved with asphalt and concrete. The entrance to the facility is on Hawkins Road which is the major access road to the facility. The access road was designed in accordance with engineering criteria appropriate for sustaining the traffic volume and loading for the industrial activities in this area. The route van that daily travels the routes between the service center and its customers uses the two-lane approach driveway. The trucks dispatched from the recycle center to deliver and pick up fresh and used solvents perform these activities at the aboveground tank area.

1.2.2 Waste Management Practices

The Farmington service center was designed to facilitate the handling and storage of the wastes resulting from the services offered by Safety-Kleen. The aboveground storage tanks, drum storage areas and return and fill station all have secondary containment and the service center has the equipment necessary for employees to safely manage wastes onsite. Appendix C contains drawings of the waste management facilities.

Spent mineral spirits from parts washers is accumulated in a 12,600 gallon aboveground storage tank via the return and fill station. 16- and 30-gallon drums containing seven and twelve gallons of spent solvent, respectively, are poured into the dumpsters in the return and fill station, and material in the dumpster is pumped into the storage tank for spent solvent. The return and fill station has secondary containment in the form of a 17'6" x 11'2" x 0.5' (730 gallons) concrete pan at its base.

The aboveground tanks have been designed in accordance with NFPA standards and are constructed of carbon steel painted white to reflect sunlight. The secondary containment is a steel reinforced concrete dike measuring 35'8" x 22'10" x 3' which holds 18,275 gallons. Two tanks holding 12,600 gallons each are in the diked area; one is for clean and one is for spent mineral spirits. Each tank is equipped with an audiovisual high level alarm.

The container storage area in the warehouse is used only for the storage of (1) sediment from cleaning the dumpsters in the return and fill shelter, (2) spent immersion cleaner and (3) dry cleaning wastes. The wastes are not mixed while on site and different wastes are segregated in color-coded drums to indicate their contents: dumpster sediment in red 16-gallon drums, immersion cleaner in gray 16-gallon drums, and dry cleaning waste in 16-gallon drums with blue lock rings and in boxes. While the wastes are not incompatible with one another, it is necessary to segregate them for inventory and quality control purposes.

The drum storage area has secondary containment in the form of a six inch wide by four inch high steel reinforced concrete curb with a 12' x 2' x 2.5' (448.8 gallons) collection trench. No more than 2,880 gallons of spent solvents will be stored in the drum storage area at any time.

The containers will be stored in the configurations shown on the Floor Plan in Appendix C. Two feet of aisle space will be maintained and the drums will be stored no more than two high. Containers in the drum storage areas will be placed on pallets and moved with a forklift or pallet jack.

WASTE ANALYSIS PLAN

ABSTRACT

Waste Description	EPA Waste Code Nos.	Facility Capacity[1]	Annual Amount[2]
Spent Mineral Spirits	D001, D008	12,600	44
Bottom Sediment From the Tank	D001, D006, D008	N/A	2
Dumpster Sediment	D001, D006, D008	2,880[3]	1
Spent Immersion Cleaner	F002, F004		2
Dry Cleaning Waste	F002		6

1 The facility capacity is in gallons.
2 The annual amount is in thousands of gallons.
3 The total amount of drummed waste stored in the warehouse will not exceed 2,880 gallons.

2.0 WASTE ANALYSIS PLAN

2.1 DESCRIPTION OF WASTES

Six types of waste result from the servicing of Safety-Kleen customers and the maintenance of the service center. Analytical data for the wastes and specifications for the products are in Appendix D and qualitative descriptions follow.

2.1.1 Wastes Resulting From the Parts Washer Service

Spent mineral spirits from parts washers is accumulated in a 12,000 gallon aboveground storage tank via the return and fill station. 16- and 30-gallon drums containing seven and twelve gallons of solvent, respectively, are poured into a dumpster at the return and fill station which in turn empties into the tank. This waste handling method results in three types of mineral spirits waste:

a. Spent mineral spirits solvent--The spent mineral spirits solvent is removed from the tank by a tanker truck on a scheduled basis. About 6,000-7,000 gallons are removed every two weeks. This waste is ignitable (D001) and EP Toxic (D008). In 1986, the Farmington service center shipped about 35,000 gallons of spent solvent to the Safety-Kleen recycle center in Denton, Texas.

b. Bottom sediment in the tank--Approximately once every two years, it is necessary to remove sediment and other heavy material from the bottom of the tank. A Safety-Kleen vacuum truck is used for this purpose and can collect up to 2,000 gallons of this waste for reclamation. The sediment is ignitable (D001) and EP Toxic (D006 and D008).

c. Dumpster sediment--Sediment also accumulates in the bottom of the dumpsters in the return and fill station. This sediment is removed manually with a shovel, drummed and the drums are stacked two-high in the drum storage area of the warehouse. About ten gallons is stored in each 16-gallon drum and the drum is color-coded (red) to indicate its contents. The chemical composition of this waste is analogous to that of the bottom sediment from the tank. In 1986, about 400 gallons of this waste were shipped to Safety-Kleen's Denton, Texas recycle center for reclamation.

Immersion cleaner remains in the drum in which it was originally used until it is received at the recycle center. Drums containing about four and one-half gallons of spent solvents are stacked two-high in the drum storage area of the warehouse. The immersion cleaner contains chlorinated solvents (F002) and cresylic acid (F004) and the drums are color-coded gray. In 1986, about 1,300 gallons of these solvents were shipped to the Denton, Texas recycle center for reclamation.

2.1.2 Wastes Resulting From the Dry Cleaner Service

Dry cleaning wastes consist of spent filter cartridges, powder residue from diatomaceous or other powder filter systems and still bottoms. These wastes are packaged on the customer's premises in black 16-gallon drums with blue lock rings and in lined boxes. The drums are then palletized, stacked two-high and placed in the drum storage area of the warehouse along with the boxes. While approximately 80% of the dry cleaning solvent used is perchloroethylene (F002), about 17% is mineral spirits, (D001) and the remaining 3% is trichloro-trifluoroethane (F002). In 1987, it is estimated that 2,000 gallons of dry cleaning wastes will be shipped to the Safety-Kleen recycle center in Denton, Texas.

2.2 QUALITY CONTROL PROCEDURES

The used solvents are the primary feedstocks for the generation of Safety-Kleen solvent products. As a result, quality control of the spent solvents is necessary to ensure that reclamation occurs in the safest and most efficient manner possible. The service center collects spent solvents from about 400 customers, most of whom are small quantity generators, and about 5,000 drums containing recoverable solvents are returned to the service center each year for shipment to a reclaimer. With such large numbers of waste generators and waste shipments, performing detailed analyses at the service center is economically and logistically infeasible.

Furthermore, as discussed earlier in the Facility Description, all the materials collected at the service center are managed at all times in the closed loop system and are usually collected from a company with a single process. The composition and quality of these materials are known and Safety-Kleen's operating experiences have shown that the collected materials rarely deviate from company specifications. As an additional safeguard, Safety-Kleen personnel are instructed to inspect all materials before returning them to the service centers. This mode of operation has been proven to safeguard the recycling process and maintain a quality product.

In accordance with HWMR 206.B.3, however, Safety-Kleen will perform physical and chemical analysis of a waste stream when it is notified or has reason to believe that the process or operation generating the waste has changed, or when the result of inspection indicates that the waste collected does not match that designated. It is Safety-Kleen's practice that suspected non-conforming material must not be accepted until a full analysis has been done or the material must be rejected. Procedures to verify waste characteristics occur at several check points in the management of the solvent, as described below.

2.2.1 Parts Washer Service

Prior to leasing a parts cleaning machine, the customer's business activity is reviewed. Where the possibility exists for contamination of the mineral spirits (e.g., pesticide, herbicide or pharmaceutical

operations), the process is reviewed to insure that the solvent is protected from the sources of contamination.

Sales representatives are instructed to visually examine the spent solvents when the machines are serviced, noting the quantity, odor and appearance of the material recovered:

a. The quantity of used solvent in the drum--Normally the 16-gallon drum of spent mineral spirits contains approximately seven gallons of liquid, the 30-gallon drum about twelve gallons and the 16-gallon drums of spent immersion cleaner about four and one-half gallons. When the amount of liquid is substantially different from the expected quantity, an inquiry of the customer's operation and handling procedures is made. Contingent on the customer's responses, the solvent is left with him or accepted. Should there still be questions as to the drum's contents, an analysis is required to determine its acceptability.

b. The odor of the liquid in the drum--Should the odor of the liquid in the drum be different from that of the mineral spirits or immersion cleaner, the drum is set aside for further action as described in item 'a'.

c. The appearance of the liquid in the drum--The used mineral spirits should always be greenish-brown in color and float on

water. The immersion cleaner is a two phase system consisting of an upper moderately alkaline water layer (20% by volume) and a lower solvent layer (80% by volume). Spent immersion cleaner should have a dark brown aqueous layer on top and the solvent should also be dark brown. Liquids in the drums which deviate from the above descriptions or which contain substantial amounts of water, high density solvent and/or oil at the bottom should be set aside for further action as described in item 'a'.

At the service center, the employee again observes the quantity, odor and appearance of the solvent prior to emptying the solvent into the wet dumpster. Drums with questionable contents are set aside and the customer is questioned. Pending his response, the drum is accepted, returned to the customer, or properly disposed of at the customer's expense. The immersion cleaner drums are never opened at the service center so additional verification is not possible until it reaches the recycle center.

2.2.2 Dry Cleaning Collection Service

The dry cleaning wastes are collected from facilities where one process is managed and the possibility of cross-contamination from other chemicals or wastes is minimal. The contents of the drums are verified by the sales representative when he services the customer and, comparable to the handling of immersion cleaner, the drums are not reopened until they reach the recycle center.

2.3 WASTE ANALYSES AT THE RECYCLE CENTER

Analyses performed at the Safety-Kleen recycle centers are undertaken to safeguard the recycling process and to assure the product quality. The following tables in Appendix D summarize a typical waste analysis plan practiced at the recycle center for the hazardous materials returned from the service center:

Table D-1 Parameters and Rationale for Hazardous Waste Selection

Table D-2 Parameters and Test Methods

Table D-3 Methods Used to Sample Hazardous Wastes

Table D-4 Frequency of Analysis

2.4 WASTE ANALYSIS PLAN UPDATE

This waste analysis plan will be modified when a new waste product is collected or when sampling and material management methods change. Revision of the plan is the responsibility of the Environmental Affairs Department at Safety-Kleen's Corporate Office in Elgin, Illinois.

PREPAREDNESS AND PREVENTION PLAN

ABSTRACT

SECURITY MEASURES--The site is secured as follows:

a. There is a chain link fence with three strands of barbed wire around the facility.

b. Warning signs are posted at all entrances.

c. Locks are on all entrances to the warehouse.

d. Remote controls for all tank operations are inside the warehouse.

e. There is twenty-four hour outdoor lighting.

INSPECTION PROCEDURES: See Appendix E for a copy of the Facility Inspection Record and Procedure.

REQUIRED EQUIPMENT--The emergency equipment requirement is met with the following:

a. Internal communications will be by voice.

b. Telephones are available in the warehouse.

c. Fire extinguishers are available next to the exits in the warehouse.

d. Water is available from the city of Farmington.

3.0 PREPAREDNESS AND PREVENTION PLAN

3.1 SECURITY MEASURES

The facility is secured with a six-foot high chain link fence topped by three strands of barbed wire. All access gates are locked when the facility is unoccupied and warning signs stating "Danger - Unauthorized Personnel Keep Out" which are visible from twenty-five feet are posted at the entrances. In addition, outdoor lights remain on at all times.

The office/warehouse building is secured with locks on all doors and warning signs are posted at all entrances to work and waste storage areas.

The tanks are inaccessible in that material can not be added to or removed from them without activating the pumps, the controls for which are inside the warehouse. The pumps are not activated unless mineral spirits product or waste is being added to or removed from the tanks by Safety-Kleen personnel. In addition, warning signs are posted on the return and fill station.

3.2 INSPECTION PROCEDURES

The branch (i.e., service center) manager or his designate is responsible for carrying out and documenting the facility inspection

(Appendix E) on a daily basis. He must note any repairs that are needed and assure that they are completed. If he can not carry out the repairs himself, he must notify the Technical Services Department at Safety-Kleen's corporate headquarters and request assistance. Completion of repairs must also be noted on the Facility Inspection Record.

The regional manager is the supervisor of several branch managers in a geographic area. He must review the Facility Inspection Record on a quarterly basis to insure that they are properly completed and that any necessary repairs have been effected.

The facility inspection includes the following:

a. Tank inspections--At a minimum, the tank holding the solvent product is inspected weekly and that holding the spent solvent is inspected daily. The inspections include checks of the high level alarm and of the volume held in the tank. Sudden deviations in the solvent volumes will be investigated and their causes determined. If necessary, repairs must be initiated immediately. When the tank used to store spent solvent is 85% full, a pickup must be scheduled with the Solvent Control Department in Safety-Kleen's corporate headquarters. The solvent must not exceed 95% of the tank volume at any time.

With reference to numbers 1, 2 and 3 of the Facility Inspection

Record, the tanks at the Farmington service center have gauges to determine volumes; it is not necessary to determine the liquid level in inches and then convert to gallons. In addition, the water depth measurement is not applicable to aboveground tanks since the presence of water is an indicator of an underground tank leak. Sludge (bottom sediment) can not be determined in an aboveground tank except by inserting a measuring tape from the top. Due to the safety hazards and logistics involved, the sludge depth is estimated and its scheduled removal is based on past experience.

The secondary containment for the tanks must be checked for cracks or other deterioration. Any damage to tanks (such as rust or loose fixtures) or secondary containment must be noted and repairs initiated.

b. Solvent dispensing equipment--The solvent dispensing hose, connections and valves must be inspected for damage (such as cracks or leaks) and proper functioning. Any solvent in the hoses must be drained after use. The pumps, pipes and fittings must also be checked for damage and proper functioning. Any damage to the solvent dispensing equipment must be noted and repaired.

c. Drum storage areas--The drum storage area is inspected daily and the number and condition of the drums noted. The total

volume of the spent solvent held in the drum storage area must not exceed ten times the amount that can be collected in the secondary containment system. The contents of any leaking or suspect drums must be placed in a drum of adequate integrity. Finally, the drums must be properly labeled and marked in accordance with U.S. DOT and New Mexico hazardous waste regulations. The secondary containment system must be inspected for deterioration or failure. If cracks or leaks are detected, they must be repaired immediately.

d . Route vehicles--Each route vehicle must be inspected daily to insure the proper operation of its brakes, lights, turn signals, emergency flashers and wipers. In addition, the necessary safety equipment must be on board: sorbents, fire extinguisher, eye wash, first aid kit, reflector kits, rubber gloves, plastic aprons, and safety glasses. Any missing equipment must be replaced.

e. Dumpsters--The wet dumpster (in the return and fill station) must be inspected weekly for leaks and sediment buildup. Any leaks must be noted and repaired immediately and excess sediment must be removed from the dumpster. The dry (trash) dumpster must be inspected to insure that no liquids are being placed in it.

f. Safety equipment--The fire extinguishers must be checked to insure that the units are charged and accessible. In addition, the operation of the eyewash must be confirmed and the first aid kit and sorbents must be inspected for adequate content and accessibility. A list of required emergency equipment is in Appendix E.

g. Security--The operation of each gate and lock must be checked daily. In addition, the fence must be inspected for deterioration on a weekly basis.

3.3 FACILITY DESIGN

The Farmington service center was designed to minimize the possibility of spills or fires and to minimize the effects of any accidents which may occur. Specifications for the storage facilities, secondary containment and other equipment are in Appendix E and descriptions follow.

3.3.1 Tank Storage

The 12,600 gallon storage tank is 12' in diameter and 15' high. It is constructed of 3/16" thick (1/4" thick in the lower third of the tank) carbon steel painted white to reflect sunlight. The tanks are constructed in accordance with Underwriters Laboratories Standard 142 and they are located more than 15 feet from the property line, in accordance with National Fire Protection buffer zone requirements. The secondary

containment for the tanks consists of a monolithically poured slab and concrete block dike wall. The slab is six and the wall is eight inch thick.

The tank is equipped with an aural (siren) and visual (strobe light) high level alarm system which will alert employees when the tank is approximately 350 gallons from being full.

The return and fill station is a concrete block structure and the secondary containment is monolithically poured concrete. The dumpsters are tight-piped to the tank and all piping is aboveground.

3.3.2 Drum Storage

The slab, curbing and collection trenches for the drum storage area in the warehouse are made of steel-reinforced concrete and the concrete has been poured so that no cracks or gaps exist between them. The curbing is four inches high and six inches wide and encompasses the storage area except where there is a trench. Steel grates cover the trench to facilitate the movement of drums across it.

The mineral spirits, immersion cleaner and dry cleaning wastes are compatible with the drums in which they are stored; in fact, mineral spirits is sometimes used as a rust-preventive coating for steel. Dry cleaning still bottoms and powder residue are stored in black polyethylene drums and filters in nylon-lined, triple-thickness cardboard boxes, both of

which are DOT-approved containers. The drums have been treated with fluorine gas to be resistant to dry cleaning solvents and they will be palletized whenever possible (nine 16-gallon drums per pallet) to facilitate shipping. The boxes may be stacked while in storage and during transport.

3.4 PLANT OPERATIONS--POTENTIAL SPILL AND FIRE SOURCES AND CONTROL PROCEDURES

Employees must perform their duties in the safest, most efficient manner possible and the service center has been equipped to facilitate these activities. Drums and boxes will be moved using a handcart and pallets using a forklift or pallet jack. A hoist is available at the branch to assist in the lifting of heavy items. Upon arrival at the service center, containers of spent solvent must immediately be added to the storage tank or placed in the drum storage areas. Open drums of solvent must not be left unattended. Below are descriptions of situations which can result in accidents and the precautions taken to prevent their occurrences.

3.4.1 Potential Minor Spill Sources

The following is a list of activities that have the potential for a minor (one that can be remediated without assistance from a clean up contractor) pollution incident:

a. Pouring of drummed solvent into the dumpster--As the 16- and 30-gallon drums are poured into the dumpster, solvent can splash out. Employee training emphasizes the importance of taking care in emptying the drums. The return and fill station is underlain by a pan with a floor drain that empties into the storage tank. This design will contain this type of spill.

b. Filling of drums with solvent product--A low pressure hose with an automatic shut-off valve, similar to those used at automotive service stations, is used to fill the drums with solvent. Leaking fittings, a damaged hose or carelessness could lead to the discharge of solvent outside of the drum. Manual emergency shut-off valves are on each hose, should the equipment not function properly. In addition, employee training emphasizes the importance of inspection, maintenance and reporting of conditions with pollution incident potential.

c. Moving of containers--When a container is moved, a potential exists for it to tip over. To minimize the potential for spillage of solvent, all containers must be maintained in an upright position and remain tightly covered while in storage or in transit.

d. Delivery truck transfers--The cargo should be secured in the route vehicle with straps before transport. Individual containers of solvent can tip over or be dropped when being

moved on or off a delivery truck so transfers will be made using a handcart and a hoist, if necessary.

If a spill does occur, the amount of solvent in the containers is a quantity which can be collected with sorbent clay or pads. Any contaminated soil that results will be removed manually, drummed and shipped to a Safety-Kleen recycle center for proper disposal.

3.4.2 Potential Major Spill Sources

The following activities have the potential for a major (one for which remedial action will require assistance) pollution incident:

a. Overfilling of storage tanks--Both product and spent solvent tanks can be overfilled with a resulting discharge of solvent. A high level alarm and daily checks of tank volumes will prevent this type of incident.

b. Leaking pipelines--The pipelines and other equipment present a potential for leaks and resultant pollution. Regular inspection of this equipment and the solvent inventory will detect any leaks.

3.4.3 Potential Fire Sources

The following is a list of fire prevention and minimization measures:

a. All wastes and products are kept away from ignitable sources--Personnel must confine smoking and open flames to remote areas, separate from any solvent (e.g., the office or locker room). The mineral spirits handling area and the aboveground storage tanks are separated from the warehouse building area to minimize the potential for a fire to spread or injury to personnel to occur.

b. Ignitable wastes are handled so that they do not:

1. become subject to extreme heat or pressure, fire or explosion, or a violent reaction--The mineral spirits waste is stored in a tank or in drums, none of which are near sources of extreme heat, fire, potential explosion sources or subject to violent reactions. The tanks are vented and the drums kept at room temperature to minimize the potential for pressure build up.

2. produce uncontrolled toxic mists, fumes, dusts or gases in quantities sufficient to threaten human health--The vapor pressure of mineral spirits is low (2 mm) and it is reactive with strong oxidizers only. Toxic mists, fumes, dusts or gases will not form in quantities sufficient to threaten human health since strong oxidizers are not handled at this facility and the solvent vaporization will be minimal under normal working

conditions.

3. produce uncontrolled fires or gases in quantities sufficient to pose a risk of fire or explosion--See 'a' above and 'c' below.

4. damage the structural integrity of the Safety-Kleen facility--The mineral spirits will not cause deterioration of the tank, drums or other structural components of the facility.

c. Adequate aisle space is maintained to allow the unobstructed movement of personnel, fire protection equipment, and decontamination equipment to any area of the facility operation in an emergency.

d. "No Smoking" signs are posted in areas where solvents are handled or stored.

e. Fire extinguishers must be checked once per month and tested by the fire extinguisher company once per year.

3.4.4 Tank Evaluation and Repair Plan

The product stored in the tanks at this facility is mineral spirits which is compatible with the carbon steel structure; in fact, mineral spirits is often used as a light hydrocarbon coating to prevent rusting of metal parts.

If corrosion is noted, it will be removed and the tank repaired. If corrosion is significant and localized, the tank will be immediately taken out of service and repaired, (e.g., a patch welded over the corroded area). Should the corrosion of the vessel be extensive or if the tank is found to be leaking, the vessel will be immediately taken out of service and replaced. In the case of a tank which leaks outside of the dike, the facility's contingency plan will be initiated to insure the removal of any contaminated soil.

3.4.5 External Factors

The design of the installation is such that a harmful spill is highly unlikely to occur from most external factors. The storage tanks are inaccessible to non-Safety-Kleen personnel and the pump switches are located inside. Also, the drum storage areas are in buildings which are inaccessible to unauthorized personnel.

a. Vandalism - Only extreme vandalism would result in a solvent spill or fire. Responses to spills and fires are described in the contingency plan.

b. Strikes - A strike would not result in a solvent spill or fire.

c. Power failure - A power failure would not result in a spill or fire. Should a power failure occur, all activities requiring electricity will cease.

d. Flooding - The site elevation is above the projected 100-year flood plain; therefore, a 100-year flood will not affect the facility.

e. Storms or Cold Weather - The solvent return and fill station is roofed to eliminate the possibility of rain or snow entering the dumpsters. No opportunity is foreseen to affect the facility with snow, cold weather or storm water.

3.5 INTERNAL AND EXTERNAL COMMUNICATIONS AND ALARM SYSTEMS

Internal communication within the building and the solvent return/fill area is accomplished by voice. Telephones will be used to report a spill or a fire and to summon assistance from local and state emergency response agencies. Branch managers have emergency phone numbers of local and state emergency response teams posted by each phone located in the sales office.

Included in these phone numbers is the 24-hour telephone number which can be used to contact the Environmental Affairs Department.

CONTINGENCY PLAN

ABSTRACT

PURPOSE: This plan describes the proper action to be taken by employees during an emergency.

RESPONSIBILITIES: The emergency coordinator or his alternate is responsible for implementing the plan during an emergency.

EMERGENCY COORDINATOR: The branch manager is the emergency coordinator. The alternate emergency coordinator is the Albuquerque manager.

EMERGENCY NOTIFICATIONS:

Farmington Police Department	505/327-0222
Farmington Fire Department	505/325-3501
San Juan County Regional Medical Center	505/325-5011
Environmental Affairs Dept.	312/888-4660
New Mexico Health and Environment Dept.	505/827-9329
Rinchem	505/345-3655

4.0 CONTINGENCY PLAN

Safety-Kleen Corp. (2-004-01)
4200 A Hawkins Rd.
Farmington, New Mexico 87401

4.1 PURPOSE

The contingency plan describes the actions to be taken by each employee in the event of a spill, fire or other emergency. It includes the information necessary to address emergency situations efficiently and in such a manner as to prevent or minimize hazards to human health or the environment due to fire, explosion, or any other release of hazardous materials to the air, soil, surface water, or ground water.

The contingency plan is to be carried out immediately whenever there is a release of hazardous material which could threaten human health or the environment, implementing the procedures contained in this plan.

4.2 EMERGENCY COORDINATOR RESPONSIBILITIES

The emergency coordinator is responsible for implementing the contingency plan during an emergency; however, all employees must be familiar with the procedures in this plan and are responsible for proper implementation of the plan should the emergency coordinator or his

alternate be unavailable. The branch manager is the emergency coordinator and the Albuquerque branch manager is the alternate emergency coordinator.

The emergency coordinator and his alternate must be familiar with all aspects of this contingency plan, the operations and activities at the facility, the location and characteristics of materials handled, the location of all records within the facility and the facility layout. In addition, these coordinators have the authority to commit the resources necessary to carry out the contingency plan. Their home addresses and telephone numbers, as well as the office telephone number, are listed in Appendix F. Also listed in Appendix F are the assigned duties of each employee during an emergency. At least one employee will be at the facility or on call to respond to an emergency situation.

4.2.1 Responsibilities During an Emergency

Whenever there is an imminent or actual emergency situation, the emergency coordinator (or his alternate when the emergency coordinator is not available) must immediately:

a. activate the internal facility communication system to notify all facility personnel;

b. notify Safety-Kleen's Environmental Affairs Department using the 24-hour telephone number after working hours - 312/888-4660; and

c. notify appropriate state or local agencies with designated response roles, if necessary.

Whenever there is a release, fire, or explosion, the emergency coordinator must immediately try to identify the character, exact source, amount, and extent of any contamination. Because of the limited number of materials being handled at the facility, he or she may do this by observation or by review of facility records. If necessary, outside laboratories may be contacted to perform chemical analysis.

Concurrently, the emergency coordinator must assess possible hazards to human health or the environment that may result from the release, fire, or explosion. This assessment must consider both direct and indirect effects of the release, fire, or explosion (e.g., the effects of any toxic, irritating, or asphyxiating gases that may be generated, or the effects of any hazardous run-off).

During an emergency, the emergency coordinator must take all measures necessary to ensure that fires, explosions, and releases do not occur, recur, or spread to other hazardous waste at the facility. These measures must include, where applicable, stopping processes and operations, collecting and containing released waste, and removing or isolating containers.

4.2.2 Remedial Action Responsibilities

If the environment has been contaminated or there is a potential for contamination as a result of a fire, explosion, or spill, the emergency coordinator must contact the Environmental Affairs Department to report the incident. The treatment, storage and/or disposal of the recovered waste, contaminated soil or surface water that results must be arranged by Safety-Kleen and carried out as expeditiously as possible.

The emergency coordinator must ensure that, in the affected area(s) of the facility:

a. no substance that may be incompatible with the released material is brought on site until cleanup procedures are completed; and

b. all emergency equipment listed in the contingency plan is cleaned and fit for its intended use before operations are resumed.

4.2.3 Reporting Responsibilities

If the emergency coordinator determines that the facility has had a release that could threaten human health or the environment, the coordinator must report those findings as follows:

a. If the assessment indicates that evacuation of local areas may be advisable, the coordinator must immediately notify appropriate authorities.

b. The coordinator must immediately notify the Environmental Affairs Department. The department will report the incident to the New Mexico Health and Environment Department (HED), including the:

(1) name and telephone number of notifier;
(2) name and address of facility;
(3) time and type of incident (e.g., release, fire);
(4) name and quantity of material(s) involved, to the extent known;
(5) the extent of injuries, if any; and
(6) the possible hazards to human health, or the environment outside the facility.

Safety-Kleen will notify the appropriate state and local authorities that the facility is in compliance with section 4.2.2 before operations are resumed in the affected area(s) of the facility.

The emergency coordinator must document the time, date, and details of any incident that requires the implementation of the contingency plan. Within 15 days of the incident, Safety-Kleen will submit a written report on the incident to the New Mexico HED. The report must include:

a. name, address, and telephone number of the owner or operator;

b. name, address, and telephone number of the facility;

c. date, time, and type of incident (e.g., fire, explosion);

d. name and quantity of material(s) involved;

e. the extent of injuries, if any;

f. an assessment of actual or potential hazards to human health or the environment, where this is applicable; and

g. estimated quantity and disposition of recovered material that results from the incident.

4.2.4 Chain of Command

Based on the emergency response procedures described above, the chain of command during an emergency is as follows:

a. The person who discovers/causes the spill reports to the emergency coordinator.

b. The emergency coordinator contacts the Environmental Affairs Dept.

c. The Environmental Affairs Department reports to the New Mexico HED.

4.2.5 Government Agencies and Local Authorities to Be Notified

During an emergency, the following government agencies and local authorities may be contacted:

Agency or Authority	Rationale
Police Department	Notify if there is imminent danger to human health.
Fire Department	Notify if there is a fire, uncontrolled spill, or other imminent danger.
Hospital	Notify if there are any injuries.
New Mexico HED	Report releases and fires.
Rinchem	Call to assist with remedial action after a release.

Arrangements have been made to familiarize the police department, fire department and local emergency response teams with the layout of the facility, the properties of hazardous materials handled and associated hazards, locations where facility personnel normally work, entrances to and roads inside the facility, and possible evacuation routes. Arrangements have also been made to familiarize the local hospital with the types of

injuries or illnesses which could result from fires, explosions, or releases at the facility. Copies of the letters to the local police department, fire department and hospital are in Appendix F.

4.3 EMERGENCY RESPONSE PROCEDURES

Response actions to be taken in specific emergency situations are described in the sections which follow.

4.3.1 Minor Spills

If a spill should occur while pouring spent solvent into a dumpster or filling drums with solvent product at the return and fill station, and it is contained in the secondary containment at the base of the return and fill station, remedial action will not be necessary. Should the spill occur outside the containment, different actions must be taken depending on whether the spill occurs on a paved or unpaved area:

a. If the solvent spills on a paved area, it must be collected with sorbent sheets and/or sorbent clay (such as "Oil Dry"). The sorbents will be collected, drummed and shipped to the Safety-Kleen recycle center for proper disposal.

b. If the solvent spills on an unpaved area, the free solvent must be collected with sorbent material. The sorbent material and

any contaminated soil must be collected, drummed and shipped to a Safety-Kleen recycle center for proper disposal.

If a spill occurs while moving or delivering drums outside of the warehouse, the response actions described in 'a' and 'b' above must be followed. Spills inside the warehouse will be prevented from contaminating the environment by the concrete floor and the secondary containment. In the event of a spill indoors, the doors and windows should be opened to improve the ventilation in the confined area. If solvent is spilled in a non-explosion rated area or is flowing in such, insure that all sources of ignition (e.g., thermostats or light switches) are left in the same position (either on or off) as at the time of the spill. Then, following the instructions of the appropriate Material Safety Data Sheet (Appendix F, Corporate Policy 600-608), the worker will enter the area wearing rubber gloves, aprons, safety glasses, and/or a respirator, collect the liquid, drum it and return it to storage.

Cleanups are completed only when the workers have cleaned themselves and the emergency equipment with soap and water. All minor spills must be reported to the Environmental Affairs Department and the department will contact the New Mexico HED, if required.

4.3.2 Major Spills

Any spill which can not be completely remediated using the methods described in 'a' and 'b' of section 4.3.1 is a major spill. A major spill is usually the result of a vehicular accident, tank overfilling, equipment failure or a fire. Spilled material which escapes collection can contaminate soil, surface water, ground water, sanitary sewer systems and storm sewer systems. Emergency response to this type of spill should be as follows:

a. Assist any injured people.

b. Stop the flow of solvent, if possible.

c. Retain, contain or slow the flow of the solvent if it can not be stopped.

d. If solvent escapes your containment efforts, immediately call the local Fire Department, and report to the emergency coordinator and the Environmental Affairs Department.

e. Immediately recover the spilled solvent to reduce property and environmental damage. Start recovery operations immediately.

The emergency coordinator shall report any incident as soon as possible to the Environmental Affairs Department using the 24-hour

telephone number: 312/888-4660. If the Environmental Affairs Department does not respond within thirty minutes, the emergency coordinator shall call an emergency cleanup response contractor, if it is deemed necessary, and report the incident to the National Response Center (telephone: 800/424-8802) and New Mexico HED (telephone: 505/827-9329 - 24 hour number). Otherwise, the Environmental Affairs Department will contact the proper authorities.

The person reporting a spill should be prepared to give his name, position, company name, address and telephone number. The person reporting should also describe the material spilled and, if possible, some estimate of the amount, and the containment status and specify any equipment needed.

Contaminated material resulting from remedial actions for major spills, will usually be disposed of at a properly permitted treatment or disposal facility since the quantity of waste material will probably exceed the storage capacity of the Safety-Kleen recycle center.

Every spill must be recorded on the Spill Report Telephone Log (Appendix F) and reviewed with branch personnel to prevent similar spills from occurring in the future. A copy of this report is sent to the Environmental Affairs Department.

4.3.3 Fire Control Procedures

If a fire occurs, personnel must act quickly with the fire

extinguisher to put out the fire before it spreads. If it can not be extinguished immediately, evacuate the facility and call the fire department.

Vapors of mineral spirits exposed to a spark or open flame can flash at temperatures over 105° F. A mineral spirits fire can best be extinguished with foam. If foam is not available, sweeping the fire with water fog can cool it, directing the water spray to push the flames into a confined area, if possible. The flame should not be extinguished until the flow of the solvent has been stopped. Then attention should be directed immediately to extinguishing the flame.

Immersion cleaner (which is a mixture of chlorinated solvents, cresylic acid and an alkaline solution), and dry cleaning wastes are not flammable, but can produce phosgene gas and hydrochloric acid at very high temperatures (about 1200° F). The potential for the materials reaching a decomposition state is minimal; however, branch personnel and local authorities must be aware of the proper response, should a fire affect the drum storage areas:

a. Isolate the hazard area and deny entry to unauthorized personnel.

b. Stay upwind; keep out of low areas.

c. Ventilate closed spaces before entering them.

d. Wear positive pressure breathing apparatus and protective clothing.

e. Evacuate a 600 foot radius area endangered by the gas.

A fire in the drum storage area can best be extinguished by foam, water fog, or water spray.

4.4 EVACUATION PLAN

Clearly marked exits exist in the warehouse and office area and employees are trained to be aware of all potential escape routes.

When an uncontrolled fire or release has occurred, all personnel are to be evacuated from the area and assemble across Hawkins Road to assure that all personnel are accounted for and out of the hazardous area. The fire department must be notified at the time of evacuation either from a safe on-site building or from a neighboring facility.

4.5 ARRANGEMENT WITH EMERGENCY RESPONSE CONTRACTORS

An emergency response contractor is identified on the Emergency Information sheet (Appendix F). This contractor will provide emergency assistance during a release and/or cleanup.

4.6 POLLUTION INCIDENT HISTORY

There are no records of a pollution incident having occurred at this facility.

4.7 IMPLEMENTATION SCHEDULE

Any discrepancies or deficiencies found during the routine inspection must be corrected expeditiously to insure that the problem does not lead to an environmental or human health hazard. Where a hazard is imminent or an accident has already occurred, remedial action must be taken immediately. The branch manager has the overall responsibility for remediating any discrepancies found during the routine inspection, and will consult with the corporate environmental and engineering staffs to design an implementation schedule for remedial action.

4.8 AVAILABILITY AND REVISION OF THE CONTINGENCY PLAN

This plan and all revisions to the plan are kept at the facility and regularly updated throughout the operating life of the facility. Copies of this document are provided to local authorities and organizations listed on the Emergency Information sheet (Appendix F) and they may be called upon to provide emergency services. In addition, this plan and all revisions to the plan are made readily available to employees working at the facility.

The plan is reviewed and updated, if necessary, whenever:

a. the facility license is modified to allow new process wastes to be stored or treated, or applicable regulations are revised;

b. the list or location of emergency equipment changes;

c. the facility changes in its design, construction, operation maintenance, or other circumstances in a way that:

   (1) increases the potential for fires, explosions, or releases of hazardous constituents, or

   (2) changes the response necessary in an emergency;

d. the names, addresses, or phone numbers of emergency coordinators change;

e. the employee assigned to each emergency task changes; or

f. the plan fails when implemented in an emergency.

PERSONNEL TRAINING

ABSTRACT

OBJECTIVE: The purpose of training is to familiarize employees with environmental regulations, records and emergency procedures so they can perform their jobs in the safest and most efficient manner possible. The program is designed to ensure that facility personnel are able to respond effectively to emergencies by familiarizing them with emergency procedures, emergency equipment and emergency systems.

TIME OF TRAINING

JOB TITLE	Prior to Starting Work	On the Job	Annually	When Regulations and/or Procedures Change
Regional Manager			X	X
Branch Manager	X		X	X

5.0 PERSONNEL TRAINING

5.1 OUTLINE OF TRAINING PROGRAM

Each employee is trained to operate and maintain the facility safely, and to understand hazards unique to his job assignment. New branch managers must complete an introductory training program before starting their jobs, with annual review and update thereafter. Appendix G contains information on service center personnel and trainers, job descriptions, training outlines and training record forms.

5.2 ORGANIZATION STRUCTURE AND JOB DESCRIPTIONS

Environmental compliance and training of branch employees is the responsibility of the branch manager. It is the responsibility of his regional manager to insure that the branch manager is trained and that he trains all branch personnel. The Environmental Affairs Department, in turns, train all regional managers annually. Job descriptions for branch personnel are in Appendix G.

5.2.1 Branch Manager

The branch manager is ultimately responsible for the operations at the service center. Any employees report to him and he, in turn, must provide

the training and materials necessary for them to execute their duties. With respect to environmental compliance, he must:

a. keep the service center clean and orderly;

b. execute or designate an employee to execute the daily inspection, keep a written log and remediate any problems;

c. know the potential hazards of the material and wastes handled on site;

d. identify potential spill and fire sources and be able to execute the contingency plan;

e. inform all employees of their environmental responsibilities;

f. notify the proper authorities during an emergency, remediate the situation to the best of his abilities, and submit necessary reports to the corporate office; and

g. maintain all environmental records (such as manifests, training records and spill reports) at the service center.

5.2.2 Regional Manager

The regional manager oversees the operations of several (six to eight) service centers in a geographic area. Branch managers report to him and he, in turn, must verify that the branch managers are operating their facilities in compliance with environmental regulations as well as Safety-

Kleen's internal standards. With respect to environmental compliance, he must:

a. perform a quarterly inspection of each branch in his region to review recordkeeping and maintenance practices;

b. conduct an annual training session for branch managers and secretaries;

c. insure that the branch manager is training branch employees;

d. make certain that the contingency plan and remedial actions have been properly executed for any emergencies; and

e. assume the responsibilities of the branch operations in the absence of the branch manager.

5.2.3 Environmental Affairs Department

Safety-Kleen's Environmental Affairs Department operates out of the corporate office in Elgin, Illinois. Each regional engineer manages the training, permits and other compliance issues for the branches in a geographic area of the country. The Department must:

a. execute training of the regional managers in accordance with environmental regulations and corporate policy;

b. notify the proper authorities, oversee remedial actions and submit a written report to the state after an emergency situation has occurred;

c. assure that environmental permits are submitted and updated as required; and

d. manage any environmental compliance issues which exceed the resources available at the branch or regional level.

5.3 DESCRIPTION OF THE TRAINING PROGRAM

Employee training is accomplished using both classroom and on-the-job methods. The Environmental Affairs Department trains the regional managers, and each regional manager, in turn, trains his branch managers and secretaries.

An employee is trained prior to starting or as soon as he or she begins working, (depending on his or her position), and annually thereafter. Regional managers are never new employees in that they are promoted from within the company. Training program outlines are in Appendix G.

5.3.1 Training of New Branch Managers

New branch managers are trained for twelve weeks before they begin their new positions. This training is both in situ and classroom modes. While being trained at a designated "training branch", the new branch manager reviews all environmental records and learns the recordkeeping requirements for each. These records include: manifests, personnel records, training records, facility inspection records, and spill reports.

The training culminates in two weeks of classroom training, one day of which is devoted to environmental compliance. Six hours consists of an introduction to environmental law and a review of the Part A, Waste Analysis Plan, Preparedness and Prevention Plan, Contingency Plan, Training Plan and Closure Plan. This training is outlined in Appendix G.

An additional one and a half hours is spent with the environmental engineer responsible for permits and compliance in the branch manager's state. Regulations unique to that state are discussed as well as the results of any past state inspections and other compliance issues.

5.3.2 Annual Training

On an annual basis, regional managers are trained by the Environmental Affairs Department in a two-day session which concludes with a certification test (Appendix G). The regional managers must execute the same training session for their branch personnel on an annual basis. The

class includes updates on environmental regulations, an in-depth review of the contingency plan and a review of RCRA inspection criteria.

All branch employees must annually review the items listed in the Training Plan Outline for Branch Employees. This review is in the form of slide/tape presentations, review and discussion of the storage facility permit application and Corporate Policies 600-608, 609 and 610. In addition, periodic memoranda on changes in environmental regulations are issued by the Environmental Affairs Department and must be read and discussed by all regional and branch personnel.

5.4 TRAINING RECORDS

All training must be documented using the record forms in Appendix G. The records must be kept on file at the facility until closure.

CLOSURE PLAN

ABSTRACT

LOCATION ADDRESS: Safety-Kleen Corp. (7-008-21)
4200 A Hawkins Road
Farmington, New Mexico 87401

U.S. EPA I.D. NO: NMD 980698849

WASTE UNITS TO UNDERGO CLOSURE:

a. Tank Storage - one 12,600 gallon aboveground storage tank

b. Drum Storage - an area of about 187 square feet with a storage capacity of 2,880 gallons.

c. Return and Fill Station - The location of this waste management unit is shown in the Site Plan. It can hold 275 gallons of waste.

6.0 CLOSURE PLAN

6.1 PURPOSE

The Farmington service center operates as a storage facility for hazardous wastes, and Safety-Kleen believes it is required that it be closed in accordance with the closure requirements of New Mexico HWMR 206.C. Closure of the facility will be carried out in accordance with the steps outlined in this plan and Appendix H contains an estimated schedule and cost for the completion of closure. Safety-Kleen will remove all hazardous wastes and residuals from the facility and will therefore eliminate the need for further maintenance and care.

6.2 ABOVEGROUND TANK AND ASSOCIATED PIPING

To safely clean and decommission the aboveground storage tank:

a. Remove the remaining material from the tank and return the materials to the Recycle Center for reclamation.

b. Provide access to the tank.

c. Rinse, scrape and squeegee the tank interior, removing all residual waste material and rinsate.

d. Disconnect and decontaminate all appurtenant piping and pumping equipment.

e. Remove tank and appurtenant equipment and reuse or sell as scrap.

f. Clean and raze the diking and slab.

g. Backfill all excavations with clean fill materials.

h. Transport and dispose of all waste material generated during the project.

6.2.1 Removal of Waste Material and Opening of the Tank

The contents of the tank must be removed using a pump, vacuum or similar equipment and then be shipped by tanker truck to a reclaimer.

To gain access to aboveground tanks, use the manway at the top of the tank. Depending on the type of opening and the condition of the equipment, a variety of tools may be used to open the manway. Care must be exercised to minimize spark generation when working on the tank.

Prior to entering the tank, personnel should have full face respiratory protection and protective clothing. Once the tanks have been opened, they must be provided with positive ventilation. The tanks will then be inspected to determine the approximate quantity and physical conditions of any remaining waste material.

6.2.2 Removal of Residual Waste and Cleaning of Tank

Before removing any residual waste from the tank, all piping and appurtenant equipment will be flushed with clean mineral spirits followed by a detergent solution.

The method used to remove the residual waste material from the tanks will depend on the physical properties and quantities of that material. Prior to any person entering the tank, an effort will be made to remove as much liquid and sediment as possible (see section 6.2.1).

Subsequent to vacuuming the majority of the material from the tanks, it may be necessary to use a high pressure wash system using clean solvent and a detergent solution to rinse residual material from the walls, roof, and floor of the tank. The evacuated material and the rinse solution will be shipped to a reclaimer. The quantity of wash fluid used will be kept to a minimum in order to limit the amount of waste material.

Storage tanks are considered confined spaces (i.e. spaces open or closed having a limited means of egress in which poisonous gases or flammable vapors might accumulate or an oxygen deficiency might occur), and confined space entry requires special procedures:

a. Tanks are to be washed, neutralized and/or purged (where flammable atmosphere is present) prior to being entered.

b. Supply valves must be closed and tagged and bleeder valves left open; or supply piping should be disconnected.

c. Pumps or motors normally activated by automatic controls shall be operated manually to be sure they have been disconnected. Instrument power switches should be tagged "Off".

d. On tanks where flammable vapors may be present, all sources of ignition must be removed.

e. Under circumstances where "hot work" (welding, burning, grinding, etc.) is to be performed in or on the vessel, a test for combustible gases shall be taken. This is referred to as a "flash test". In all tank entering situations, an oxygen deficiency test shall also be performed prior to tank entry. Both flash test and oxygen deficiency test will be performed by the supervisor of the area in which the work is being done.

f. Under conditions where there exists a possibility (no matter how remote) of toxic vapors being present in the tank to be entered, the supervisor will arrange to have the air tested. The results of all tests will be displayed on site.

g. There must be a set of wristlets or a rescue harness and sufficient rope at the job site to effect a rescue. Any other

rescue equipment considered necessary must also be on the job site.

h. Workers should wear rescue harnesses if entering a tank with a large enough opening to easily affect a rescue. In tanks with small openings, only wristlets may be used. In cases where there are agitator shafts, drums or other hazards in which the man's life-line would be entangled and the supervisor in charge feels that wearing the lifeline may entrap a man and increase the hazard, the wearing of a harness or wristlets may be eliminated.

i. A constant source of fresh air must be provided to insure a complete change of air every few minutes. In cases of short term entry for inspection or removal of objects, an air mask is recommended. In cases of long term entry the use of an air mover should be considered.

j. When a ladder is required to enter a tank, the ladder must be secured and not removed while anyone is in the vessel. In cases where a rigid ladder could become an obstacle, a chain ladder may be used.

k. Adequate illumination must be provided and a flashlight or other battery operated light must also be on hand to provide

illumination for a safe exit in the event of an electrical power failure.

l. All electrical equipment to be used inside the tank must be in good repair and grounded.

m. Other people working in the immediate area will be informed of the work being done, and they must inform the watcher or supervisor immediately of any unusual occurrence which makes it necessary to evacuate the tank.

n. The Watcher or Standby Observer System must be implemented. It consists of the following:

(1). Workers inside a confined space must be under the constant observation of a fully instructed watcher.

(2). Before anyone enters the tank, the watcher will be instructed by the person in charge of the entry that an entry authorization must be obtained from the person in charge and a rescue harness or wristlets must be used on the job.

(3). The watcher must also know the location of the nearest telephone (with emergency numbers posted), eyewash and/or shower, fire extinguisher and oxygen inhalator. For all

"hot work" inside a tank, the watcher must be instructed how to shut down the welding/burning equipment.

(4). As long as anyone is inside the vessel, the watcher must remain in continuous contact with the worker. HE IS NOT TO LEAVE THE JOB SITE EXCEPT TO REPORT AN EMERGENCY. He does not enter the tank until help is available.

(5). After being instructed in his responsibilities, the watcher will sign a form indicating his understanding.

o. All welding and burning equipment must be provided with a shutoff under the control of the watcher; and the watcher must be shown how to shut off the equipment if it becomes necessary. Welding and burning equipment will only be taken into a tank immediately prior to its use and must be removed from the tank immediately after the job is finished.

p. For all "hot work" inside a tank, a properly executed flame permit, if needed, must be displayed at the job site and standard welding and burning safety precautions will always be followed.

6.2.3 Removal of the Tank

To safely remove the tank :

a. Disconnect all appurtenant piping.

b. Disconnect all appurtenant pumping equipment.

c. The vessels shall be removed and reused or cut up and sold as scrap.

d. Raze the diking and slab and inspect the excavation. Examine soils using a photoionization detector. If contamination is indicated, confirm with laboratory analyses, determine the extent of contamination with a soil study and overexcavate soils down to clean soils.

e. Backfill the excavation with clean fill materials and grade to ground level.

6.3 DRUM STORAGE AREA IN WAREHOUSE

The drum storage area is used for the storage of drums of used immersion cleaner, dry cleaning waste and dumpster sediment. At closure, all the drums will be removed and transported to a reclaimer after proper packaging, labeling and manifesting. The contents of the drums will be reclaimed and the drums will be cleaned for reuse.

The concrete floor and spill containment sumps will be cleaned with a

detergent solution and the cleaned area will be inspected, using a photoionization detector, to determine the completeness of the cleaning. Any other wastes generated in the closure process will be reclaimed or properly disposed of.

6.4 SOLVENT RETURN AND FILL STATION

The return and fill station is used to collect and return the used mineral spirits to the waste storage tank. Closure of the return and fill station will be made prior to the cleaning and removal of the storage tank. At closure, the sediment in the dumpsters will be removed and drummed, labeled, and manifested and then shipped to a reclaimer.

The dumpster and the dock area will be thoroughly rinsed with a detergent solution. The rinsate is discharged through the appurtenant piping system into the storage tank, which will be subjected to a separate closure procedure as described earlier. The clean dumpster and dock structure will be reused by Safety-Kleen or scrapped.

6.5 FACILITY CLOSURE SCHEDULE AND CERTIFICATION

Within 90 days of receiving the final volume of hazardous wastes, Safety-Kleen will remove all hazardous wastes from the site in accordance with the approved closure plan. The New Mexico Health and Environment Dept. may approve a longer period if Safety-Kleen demonstrates that the

activities required to comply with this paragraph will, of necessity, take longer than 90 days to complete or the following requirements are met:

a. the facility has the capacity to receive additional wastes;

b. there is a likelihood that a person other than Safety-Kleen will recommence operation of the site; and/or

c. closure of the facility is incompatible with continued operation of the site. In this case, Safety-Kleen will take all steps necessary to prevent threats to human health and the environment.

Safety-Kleen will complete closure activities in accordance with the approved closure plan and within 180 days after receiving the final volume of wastes.

When closure is completed, Safety-Kleen shall submit to the New Mexico Health and Environment Dept. certification, both by the operator and by an independent registered professional engineer, that the facility has been closed in accordance with the approved closure plan.

Appendix A

Part A Application

Please print or type in the unshaded areas only
(fill-in areas are spaced for elite type, i.e., 12 characters/inch).

Form Approved OMB No. 158-R0175

FORM 1 GENERAL

U.S. ENVIRONMENTAL PROTECTION AGENCY

GENERAL INFORMATION

Consolidated Permits Program

(Read the "General Instructions" before starting.)

I. EPA I.D. NUMBER: F N M D 9 8 0 6 9 8 8 4 9 D

LABEL ITEMS

I. EPA I.D. NUMBER

III. FACILITY NAME

V. FACILITY MAILING ADDRESS

VI. FACILITY LOCATION

PLEASE PLACE LABEL IN THIS SPACE

GENERAL INSTRUCTIONS

If a preprinted label has been provided, affix it in the designated space. Review the information carefully; if any of it is incorrect, cross through it and enter the correct data in the appropriate fill-in area below. Also, if any of the preprinted data is absent *(the area to the left of the label space lists the information that should appear)*, please provide it in the proper fill-in area(s) below. If the label is complete and correct, you need not complete Items I, III, V, and VI *(except VI-B which must be completed regardless)*. Complete all items if no label has been provided. Refer to the instructions for detailed item descriptions and for the legal authorizations under which this data is collected.

II. POLLUTANT CHARACTERISTICS

INSTRUCTIONS: Complete A through J to determine whether you need to submit any permit application forms to the EPA. If you answer "yes" to any questions, you must submit this form and the supplemental form listed in the parenthesis following the question. Mark "X" in the box in the third column if the supplemental form is attached. If you answer "no" to each question, you need not submit any of these forms. You may answer "no" if your activity is excluded from permit requirements; see Section C of the instructions. See also, Section D of the instructions for definitions of bold-faced terms.

SPECIFIC QUESTIONS	MARK 'X' YES	NO	FORM ATTACHED
A. Is this facility a publicly owned treatment works which results in a discharge to waters of the U.S.? (FORM 2A)		X	
B. Does or will this facility *(either existing or proposed)* include a concentrated animal feeding operation or aquatic animal production facility which results in a discharge to waters of the U.S.? (FORM 2B)		X	
C. Is this a facility which currently results in discharges to waters of the U.S. other than those described in A or B above? (FORM 2C)		X	
D. Is this a proposed facility *(other than those described in A or B above)* which will result in a discharge to waters of the U.S.? (FORM 2D)		X	
E. Does or will this facility treat, store, or dispose of hazardous wastes? (FORM 3)	X		X
F. Do you or will you inject at this facility industrial or municipal effluent below the lowermost stratum containing, within one quarter mile of the well bore, underground sources of drinking water? (FORM 4)		X	
G. Do you or will you inject at this facility any produced water or other fluids which are brought to the surface in connection with conventional oil or natural gas production, inject fluids used for enhanced recovery of oil or natural gas, or inject fluids for storage of liquid hydrocarbons? (FORM 4)		X	
H. Do you or will you inject at this facility fluids for special processes such as mining of sulfur by the Frasch process, solution mining of minerals, in situ combustion of fossil fuel, or recovery of geothermal energy? (FORM 4)		X	
I. Is this facility a proposed stationary source which is one of the 28 industrial categories listed in the instructions and which will potentially emit 100 tons per year of any air pollutant regulated under the Clean Air Act and may affect or be located in an attainment area? (FORM 5)		X	
J. Is this facility a proposed stationary source which is NOT one of the 28 industrial categories listed in the instructions and which will potentially emit 250 tons per year of any air pollutant regulated under the Clean Air Act and may affect or be located in an attainment area? (FORM 5)		X	

III. NAME OF FACILITY

1 SKIP SAFETY-KLEEN CORP. 7-008-21

IV. FACILITY CONTACT

A. NAME & TITLE *(last, first, & title)*	B. PHONE *(area code & no.)*
2 SIMPSON, JEFF REGIONAL ENG.	312 697 8460

V. FACILITY MAILING ADDRESS

A. STREET OR P.O. BOX

3 777 BIG TIMBER ROAD

B. CITY OR TOWN	C. STATE	D. ZIP CODE
4 ELGIN	IL	60123

VI. FACILITY LOCATION

A. STREET, ROUTE NO. OR OTHER SPECIFIC IDENTIFIER

5 4200A HAWKINS ROAD

B. COUNTY NAME

SAN JUAN

C. CITY OR TOWN	D. STATE	E. ZIP CODE	F. COUNTY CODE *(if known)*
6 FARMINGTON	NM	87401	

Please print or type in the unshaded areas only
(Fill-in areas are spaced for elite type, i.e., 12 characters/inch).

Form Approved OMB No. 158-S80004

FORM 3 RCRA

EPA

U.S. ENVIRONMENTAL PROTECTION AGENCY

HAZARDOUS WASTE PERMIT APPLICATION

Consolidated Permits Program

(This information is required under Section 3005 of RCRA.)

I. EPA I.D. NUMBER

	F	N	M	D	9	8	0	6	9	8	8	4	9	1

OFFICIAL USE ONLY

APPLICATION APPROVED	DATE RECEIVED (yr., mo., & day)	COMMENTS

II. FIRST OR REVISED APPLICATION

Place an "X" in the appropriate box in A or B below *(mark one box only)* to indicate whether this is the first application you are submitting for your facility or a revised application. If this is your first application and you already know your facility's EPA I.D. Number, or if this is a revised application, enter your facility's EPA I.D. Number in Item I above.

A. FIRST APPLICATION *(place an "X" below and provide the appropriate date)*

[X] 1. EXISTING FACILITY *(See instructions for definition of "existing" facility. Complete item below.)*

FOR EXISTING FACILITIES, PROVIDE THE DATE *(yr., mo., & day)* OPERATION BEGAN OR THE DATE CONSTRUCTION COMMENCED *(use the boxes to the left)*

C	YR.	MO.	DAY
8	81	01	01

[ ] 2. NEW FACILITY *(Complete item below.)*

FOR NEW FACILITIES, PROVIDE THE DATE *(yr., mo., & day)* OPERATION BEGAN OR IS EXPECTED TO BEGIN

YR.	MO.	DAY

B. REVISED APPLICATION *(place an "X" below and complete Item I above)*

[X] 1. FACILITY HAS INTERIM STATUS

[ ] 2. FACILITY HAS A RCRA PERMIT

III. PROCESSES – CODES AND DESIGN CAPACITIES

A. PROCESS CODE – Enter the code from the list of process codes below that best describes each process to be used at the facility. Ten lines are provided for entering codes. If more lines are needed, enter the code(s) in the space provided. If a process will be used that is not included in the list of codes below, then describe the process *(including its design capacity)* in the space provided on the form *(Item III-C).*

B. PROCESS DESIGN CAPACITY – For each code entered in column A, enter the capacity of the process.

1. AMOUNT – Enter the amount.
2. UNIT OF MEASURE – For each amount entered in column B(1), enter the code from the list of unit measure codes below that describes the unit of measure used. Only the units of measure that are listed below should be used.

PROCESS	PROCESS CODE	APPROPRIATE UNITS OF MEASURE FOR PROCESS DESIGN CAPACITY
Storage:		
CONTAINER *(barrel, drum, etc.)*	S01	GALLONS OR LITERS
TANK	S02	GALLONS OR LITERS
WASTE PILE	S03	CUBIC YARDS OR CUBIC METERS
SURFACE IMPOUNDMENT	S04	GALLONS OR LITERS
Disposal:		
INJECTION WELL	D79	GALLONS OR LITERS
LANDFILL	D80	ACRE-FEET *(the volume that would cover one acre to a depth of one foot)* OR HECTARE-METER
LAND APPLICATION	D81	ACRES OR HECTARES
OCEAN DISPOSAL	D82	GALLONS PER DAY OR LITERS PER DAY
SURFACE IMPOUNDMENT	D83	GALLONS OR LITERS

PROCESS	PROCESS CODE	APPROPRIATE UNITS OF MEASURE FOR PROCESS DESIGN CAPACITY
Treatment:		
TANK	T01	GALLONS PER DAY OR LITERS PER DAY
SURFACE IMPOUNDMENT	T02	GALLONS PER DAY OR LITERS PER DAY
INCINERATOR	T03	TONS PER HOUR OR METRIC TONS PER HOUR; GALLONS PER HOUR OR LITERS PER HOUR
OTHER *(Use for physical, chemical, thermal or biological treatment processes not occurring in tanks, surface impoundments or incinerators. Describe the processes in the space provided; Item III-C.)*	T04	GALLONS PER DAY OR LITERS PER DAY

UNIT OF MEASURE	UNIT OF MEASURE CODE	UNIT OF MEASURE	UNIT OF MEASURE CODE	UNIT OF MEASURE	UNIT OF MEASURE CODE
GALLONS	G	LITERS PER DAY	V	ACRE-FEET	A
LITERS	L	TONS PER HOUR	D	HECTARE-METER	F
CUBIC YARDS	Y	METRIC TONS PER HOUR	W	ACRES	B
CUBIC METERS	C	GALLONS PER HOUR	E	HECTARES	Q
GALLONS PER DAY	U	LITERS PER HOUR	H		

EXAMPLE FOR COMPLETING ITEM III *(shown in line numbers X-1 and X-2 below):* A facility has two storage tanks, one tank can hold 200 gallons and the other can hold 400 gallons. The facility also has an incinerator that can burn up to 20 gallons per hour.

C	DUP	1

LINE NUMBER	A. PROCESS CODE (from list above)	B. PROCESS DESIGN CAPACITY 1. AMOUNT (specify)	B. PROCESS DESIGN CAPACITY 2. UNIT OF MEASURE (enter code)	FOR OFFICIAL USE ONLY	LINE NUMBER	A. PROCESS CODE (from list above)	B. PROCESS DESIGN CAPACITY 1. AMOUNT	B. PROCESS DESIGN CAPACITY 2. UNIT OF MEASURE (enter code)	FOR OFFICIAL USE ONLY
X-1	S02	600	G		5				
X-2	T03	20	E		6				
1	S01	2,880	G		7				
2	S02	12,600	G		8				
3					9				
4					10				

Continued from page 2.
NOTE: Photocopy this page before completing if you have more than 26 wastes to list.

Form Approved OMB No. 158-S80004

EPA I.D. NUMBER (enter from page 1)	FOR OFFICIAL USE ONLY
W N M D 9 8 0 6 9 8 8 4 9 T/A C 1	W DUP T/A C 2 DUP

V. DESCRIPTION OF HAZARDOUS WASTES (continued)

LINE NO.	A. EPA HAZARD. WASTE NO. (enter code)	B. ESTIMATED ANNUAL QUANTITY OF WASTE	C. UNIT OF MEASURE (enter code)	D. PROCESSES 1. PROCESS CODES (enter)	D. PROCESSES 2. PROCESS DESCRIPTION (If a code is not entered in D(1))
1	D001	155	T	S02 S01	
2	D008				Included with above
3	F002	10	T	S01	
4	F004				Included with above
5	F002	27	T	S01	
6					
7					
8					
9					
10					
11					
12					
13					
14					
15					
16					
17					
18					
19					
20					
21					
22					
23					
24					
25					
26					

155T = 310,000 lbs
= ± 42,000 gal

10T = 20,000 lbs
= ± 2700 gal

27T = 54,000 lbs.
= ± 5150 gal. (10.5 lb/gal)

~~Pg.~~ Pg. 11 quantities:

Mineral spirits - 52,000 gal/yr

Immersion cleaner - 3000 gal/yr

Dry-cleaning: 6000 gal/yr.

EPA Form 3510-3 (6-80)

CONTINUE ON REVERSE

(enter "A", "B", "C", etc. behind the "3" to identify photocopied pages)

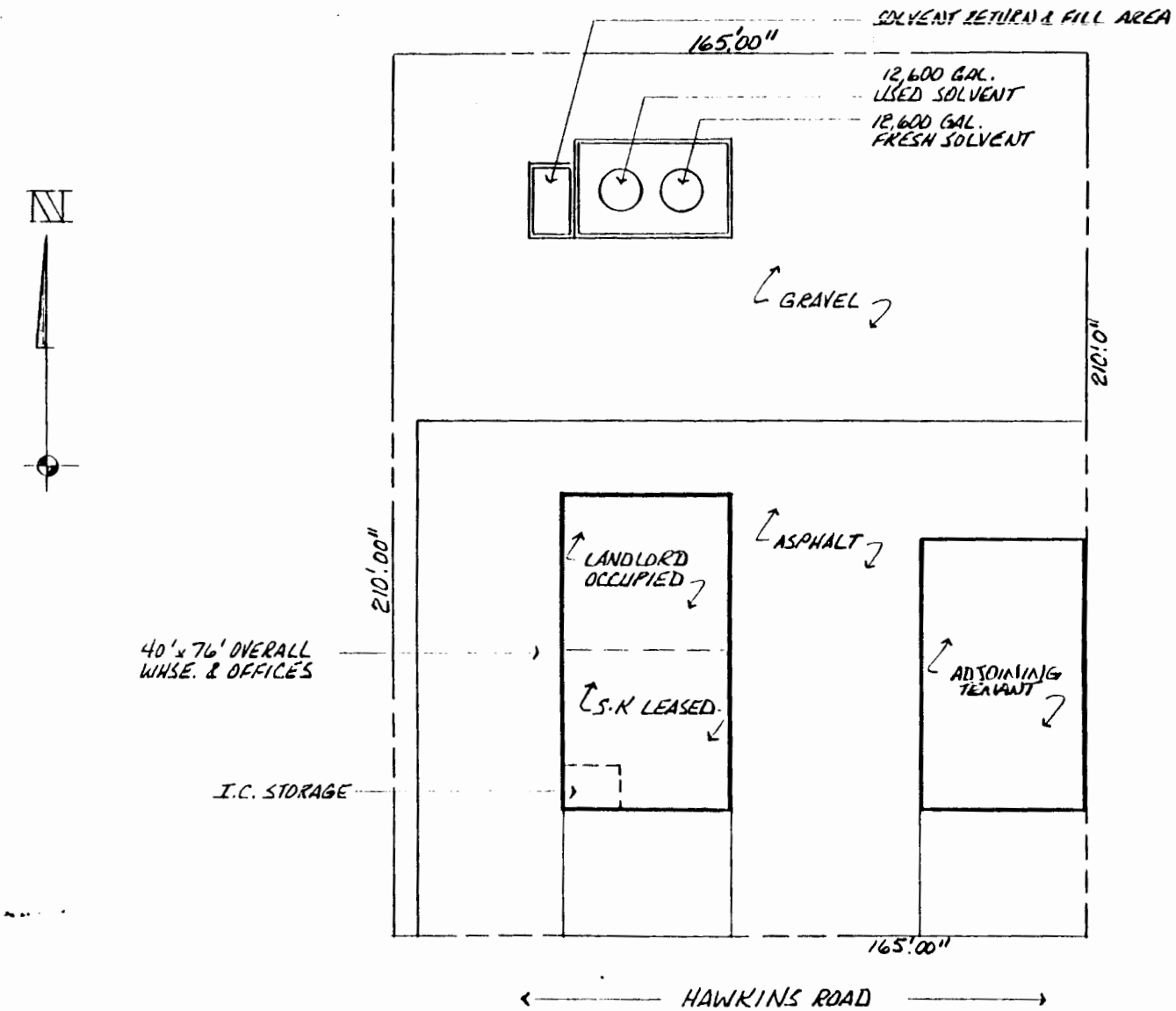

safety-kleen corp.

655 BIG TIMBER ROAD • ELGIN, ILLINOIS 60120 PHONE 312/697-8460

SERVICE CENTER: FARMINGTON, N.M.

7-008-015 (4200 A HAWKINS ROAD)

SCALE 1" = 40'-0"

DWN RD DATE 11/1/83

DRAWING (see page 4)

Form Approved OMB No. 158-S80004

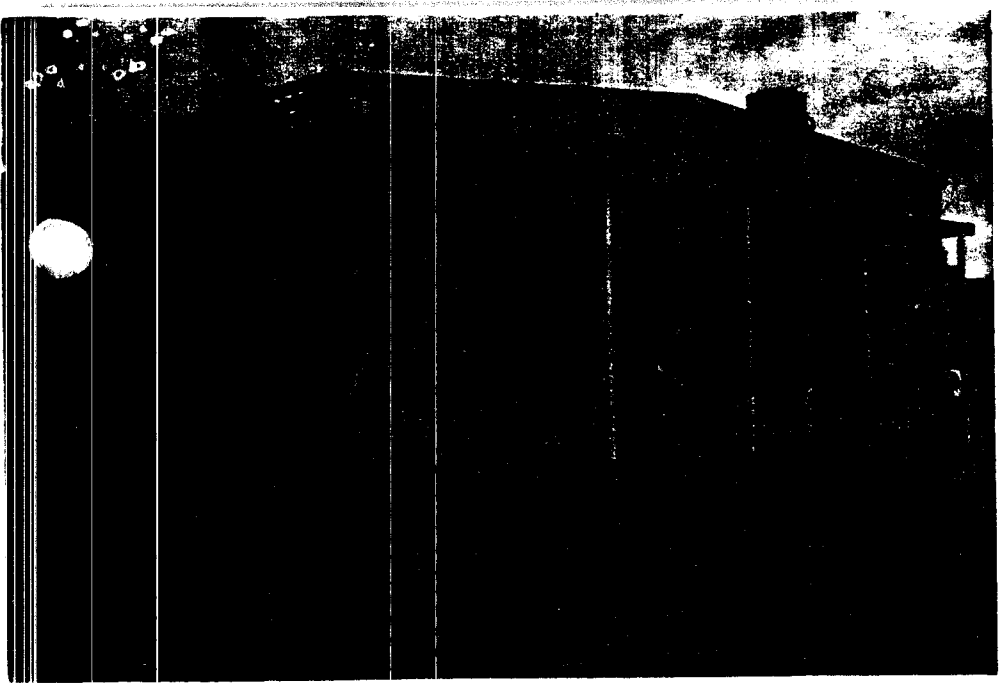

FARMINGTON, NM

Overall view of facility

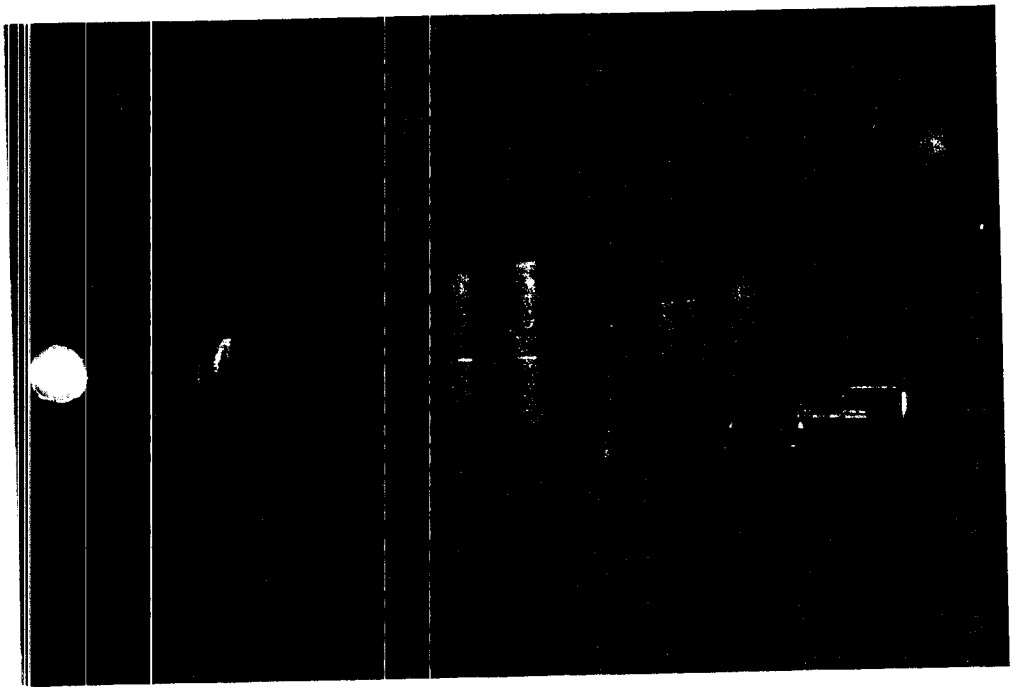

Above-ground storage tank area

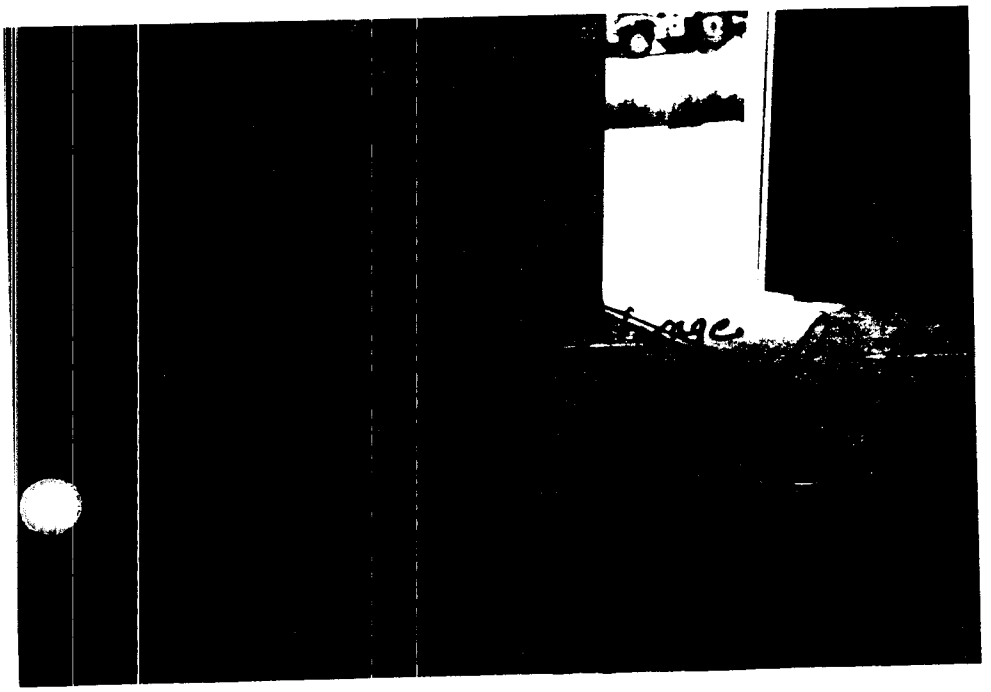

Drum storage area

Appendix B

Process Flow Diagrams

SAFETY-KLEEN SOLVENT USE & REGENERATION LOOP

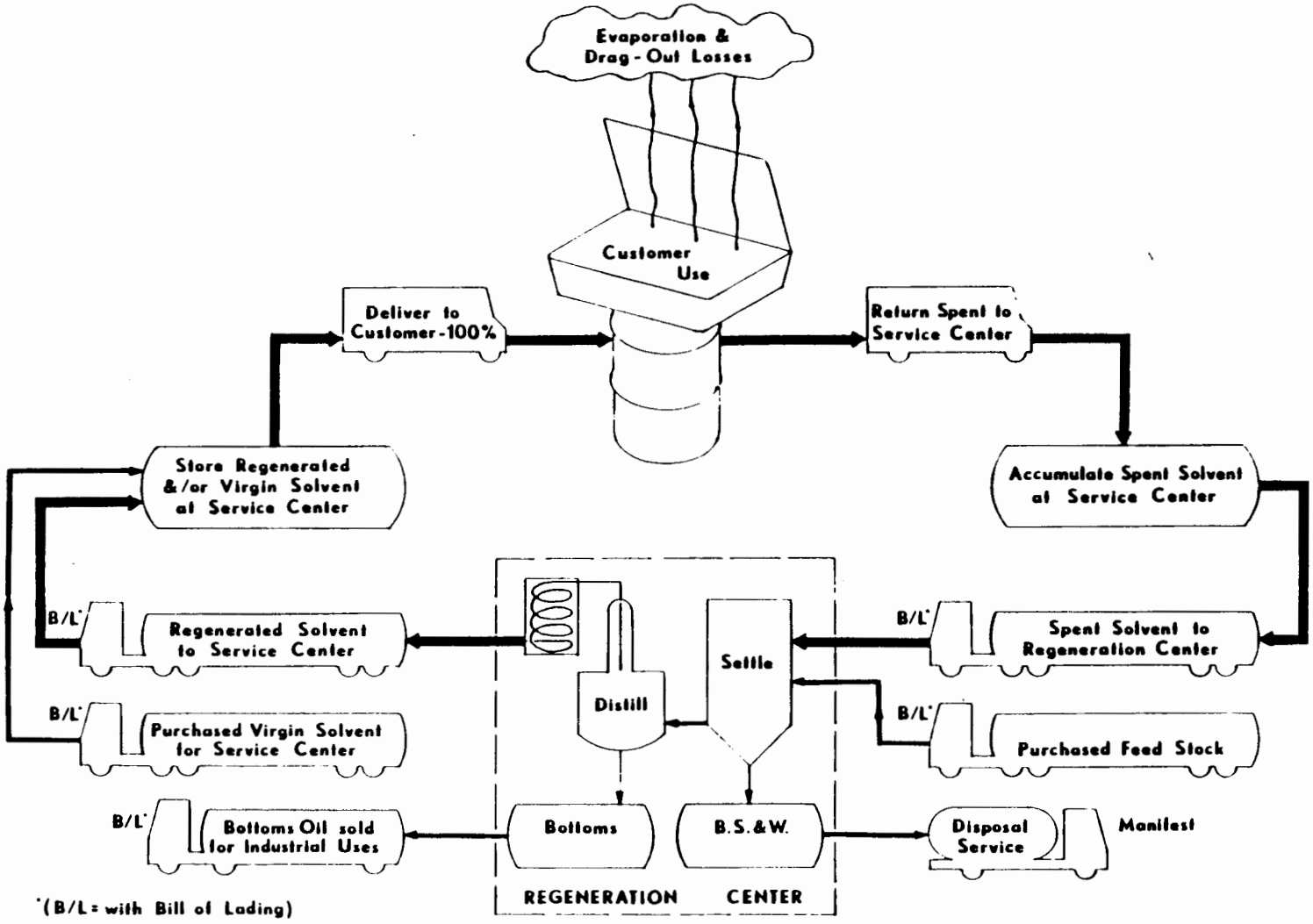

*(B/L = with Bill of Lading)

UNIT PROCESS FOR THE HANDLING OF

SPENT MINERAL SPIRITS

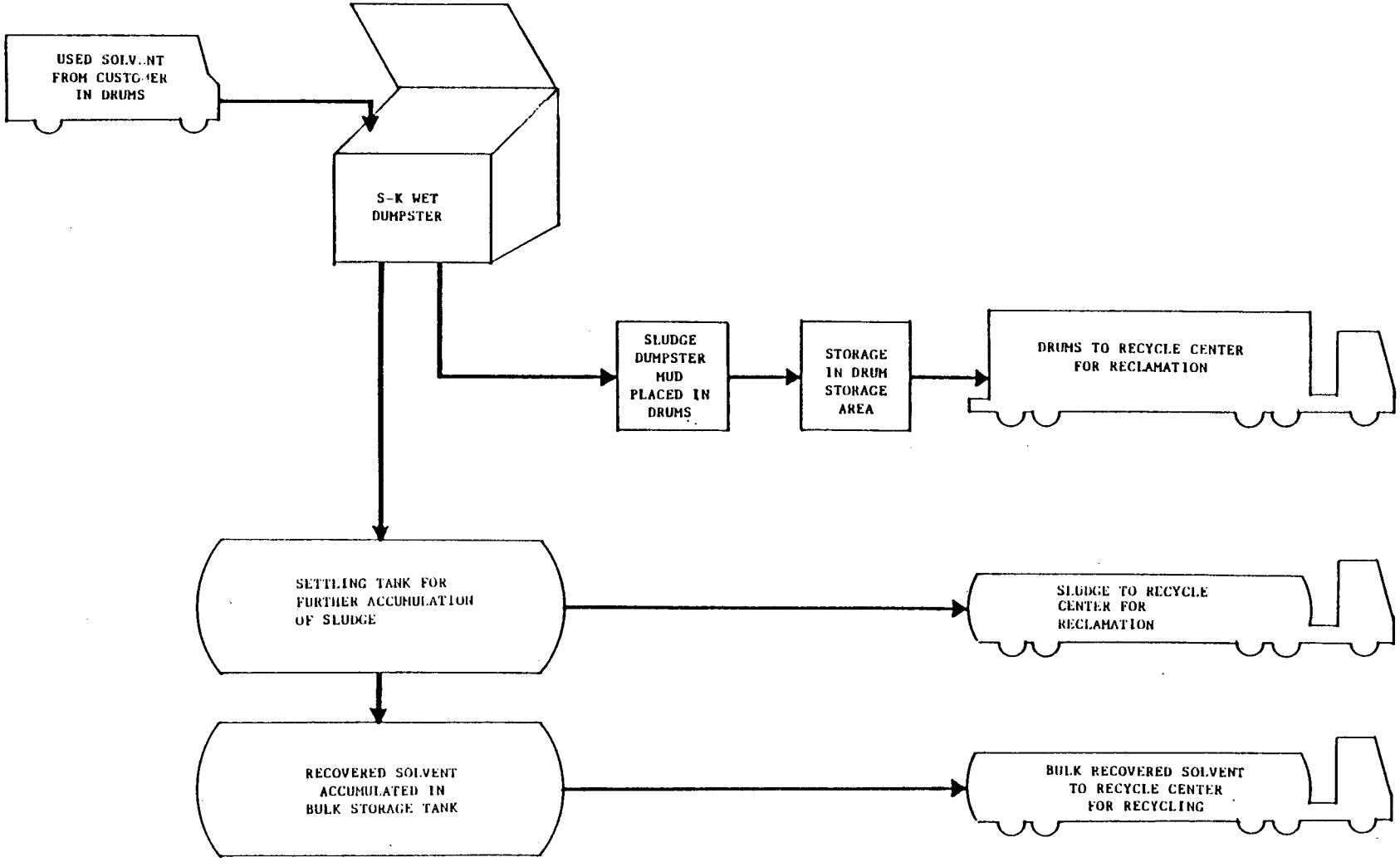

UNIT PROCESS FOR THE HANDLING OF SPENT

IMMERSION CLEANER /DRY CLEANING WASTE

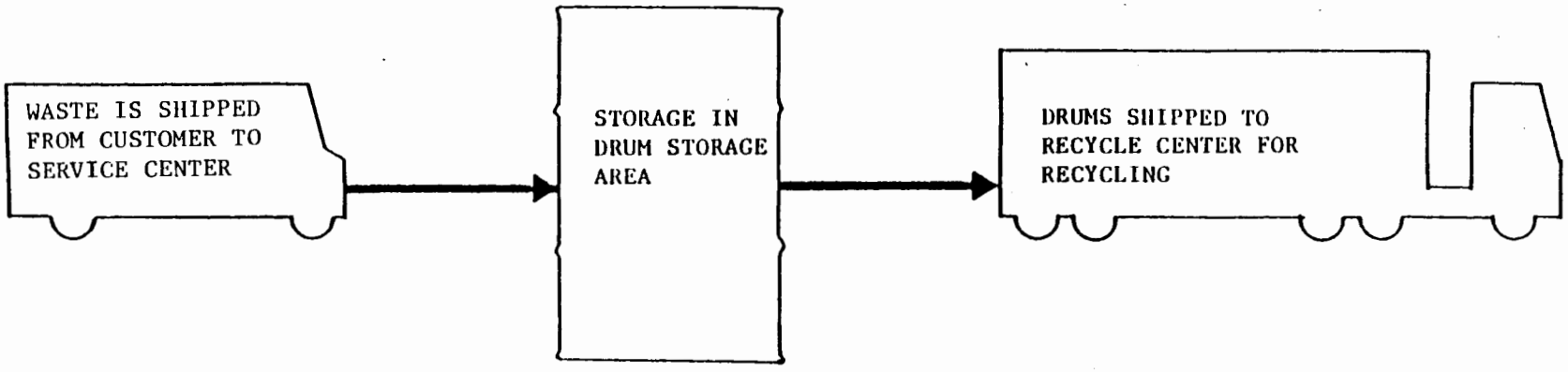

Appendix C

Maps & Facility Drawings

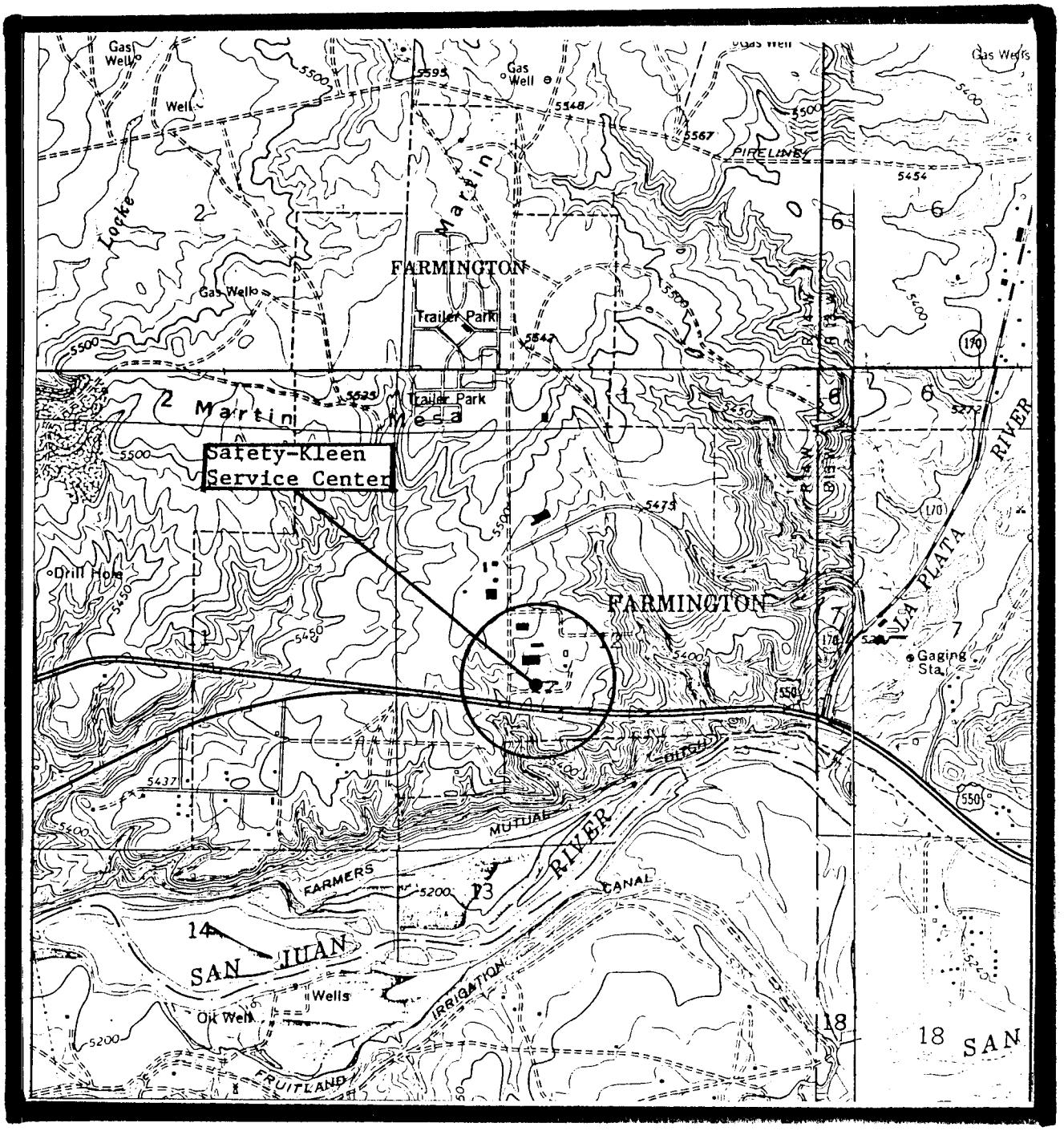

SCALE 1:24 000

1 ½ 0 1 MILE

1000 0 1000 2000 3000 4000 5000 6000 7000 FEET

1 .5 0 1 KILOMETER

CONTOUR INTERVAL 10 FEET
NATIONAL GEODETIC VERTICAL DATUM OF 1929

KIRTLAND, N. MEX.
N3637.5—W10815/7.5

TOPOGRAPHIC MAP

1966
PHOTOREVISED 1979
DMA 4357 III NE—SERIES V881

TO VIEW THE MAP AND/OR MAPS WITH THIS DOCUMENT, PLEASE CALL THE HAZARDOUS WASTE BUREAU AT 505-476-6000 TO MAKE AN APPOINTMENT

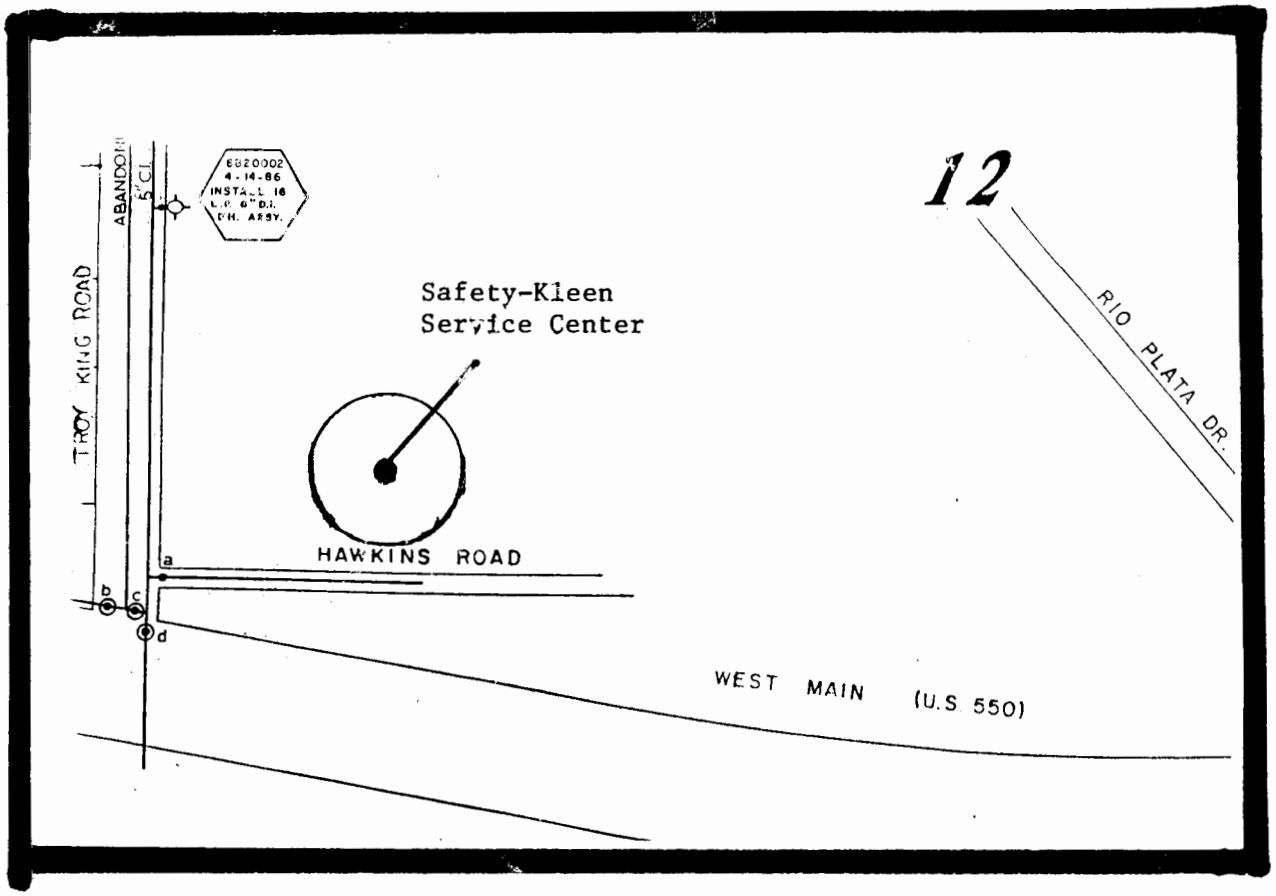

DATE SEPT. 1980 DRAWN JTB
SCALE 1" = 200' CHECKED MAD
APPROVED SES

CITY OF FARMINGTON, NEW MEXICO
PUBLIC WORKS DEPARTMENT

SEC. 12, 29N, 14W

WATER

WATER CONNECTION MAP

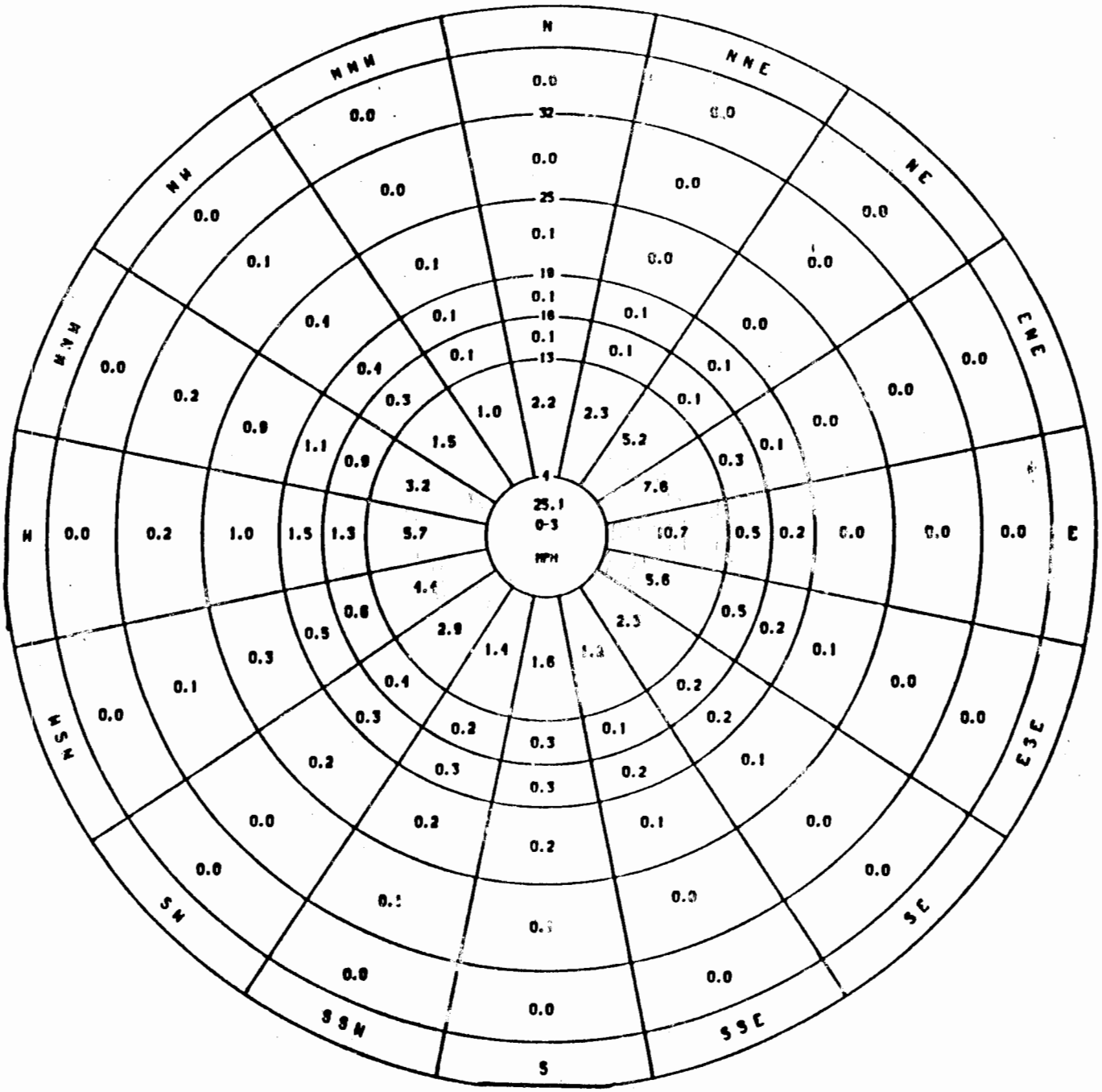

WIND ROSE
FARMINGTON, NEW MEXICO

Appendix D

Analytical Data

DENTON RECYCLE CENTER

Incoming Mineral Spirits

1987 Period Date	ER & RC Sample No.	Gallons	Solv.	Water	Bot.	°F. FP	% Volume LAHC	MC	1,1,1	Tri.	Tol.	Perc.	MS
1													
1-22	0197	-	-	-	-	-	.141	-	.016	-	.074	-	99.769
3													
3-10	0650	-	-	-	-	-	.031	-	.011	-	.136	-	99.823
3-20	0705	-	-	-	-	-	.170	-	.012	.013	.073	-	99.731
4													
4-8	0888	-	-	-	-	-	.260	.008	.025	.028	.082	-	99.598
5													
5-6	1117	-	-	-	-	-	.497	.008	.025	.055	.089	-	99.326
5-8	1111	-	-	-	-	-	.307	.006	.026	.042	.068	-	99.552
5-15	1232	-	-	-	-	-	.268	.010	-	.013	.068	-	99.641
6													
6-9	1427	-	-	-	-	-	.329	-	.014	.019	.074	-	99.564
7													
6-26	1586	-	-	-	-	-	.103	-	-	-	.135	-	99.762
7-9	1677	-	-	-	-	-	.407	-	.012	.002	.051	.046	99.482
7-15	1818	-	-	-	-	-	.349	.001	.014	.002	.054	.055	99.525

ALBUQUERQUE 7-008-01 (90) includes Farmington

Incoming Mineral Spirits

1987 Period Date	ER & RC Sample No.	Gallons	°F. FP	% Volume LAHC	MC	1,1,1	Tri.	Tol.	Perc.	MS

Solv. = solvent
Bot. = bottoms oil
FP = flash point
LAHC = light aromatic hydrocarbons
MC = methylene chloride
1,1,1 = 1,1,1-trichloroethane
Tri. = trichloroethylene
Perc. = perchloroethylene
MS = mineral spirits

RESIDUALS MANAGEMENT TECHNOLOGY, INC.

LABORATORY REPORT

CLIENT: Safety Klean - DO Corporation

DATE: 8-17-81

PROJECT #: 1038-L

P.O. #: Verbal

SAMPLE #: 1376

SAMPLE DESCRIPTION: None available

Mineral Spirits Dumpster Mud

EP TOXICITY TEST

WEIGHT USED: 100.2 gms

FINAL PH: 4.8

ACID USED: 45 mls

PARAMETER	RESULT	HAZARDOUS WASTE LIMITS
ARSENIC	0.008	5.0 mg/l
BARIUM	0.6	100.0 mg/l
CADMIUM	0.93	1.0 mg/l
CHROMIUM-TOTAL	<0.05	5.0 mg/l
LEAD	5.0	5.0 mg/l
MERCURY	0.0035	0.2 mg/l
SELENIUM	0.002	1.0 mg/l
SILVER	<0.02	5.0 mg/l
FLASH POINT	120°	140° F
pH	8.1	

Paul E. Duranceau

Paul E. Duranceau, Laboratory Director

All leaching tests and leachate analysis meet Environmental Protection Agency requirements as outlined in the May 19, 1980, Federal Register, 40 CFR 261.

safety-kleen corp.

Date 6/15/84

Solvent Sample Analysis - Summary Report

SK Sample # 4-1820 Industrial Solvents Sales Sample #_____

Material Submitted as: IC Feed 6/84

Source or Origin: Clayton R/C

(Plant#, Site or Complete Address)

Submitted by: J. Breece

Sample Size 1gal Represents_____Gallons, in ☐ Drum ☐ Bulk

☐ On Hand ☐ Per Year ☐ Other_____ (Per week, month, quarter, etc.)

Tests

API or Sp. Gr. @ 60°F. _____

Flash Point (ASTM D-56) _____

Boiling Point (ASTM D-86)_____

IBP_____°F.

5_____

10_____

20_____

30_____

40_____

50_____

60_____

70_____

80_____

90_____

95_____

EP_____

ODOR

FIA

Aromatics _____

Saturates _____

Olefins _____

K-B _____

Other (Specify)_____

Solids_____

(Centrifuge, distillation, or "Green Sheet" definition, or other) - specify:

*Type of Residue -

Distillate_____ vol %

Residue* _____ vol %

Water _____ vol %

	COMPOSITION, (VOL. %) of total sample submitted (by distillation)	COMPOSITION, (VOL. %) of solvent portion of distillate (by G.C.)
Bottoms	17.0	
cresol	15.0	
water	6.0	
* chlorinated + MS	62.0	

Comments: * See attached G.C. Possible yield 77% vol

RECOMMENDED DISPOSITION:

Accept ☐ Reject ☐

Distribution: J. Breece
M. Levy

Report by: B. Blair

Rev. 10/82

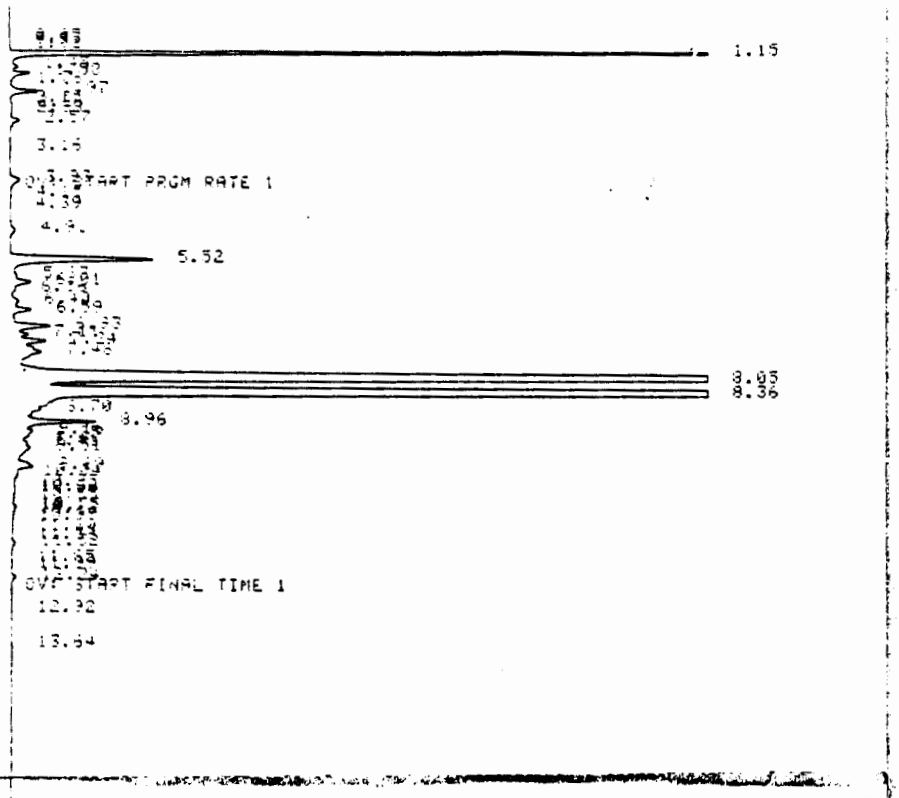

093

[RP] 5980A SAMPLER INJECTION @ 17:04 JUN 14, 1984
SAMPLE # : ID CODE :
99 1820

NORM %

RT	EXP RT	AREA	TYPE	WIDTH	CAL	AMOUNT	NAME
0.00			BASELINE @ START RUN = 2.83				
0.00			THRESHOLD @ START RUN = 4				
0.00			PEAK WIDTH @ START RUN = 0.04				
0.00			RP: REJECT + 3000				
1.15	1.15	263420.00 +	VV	*0.044	1	29.298	MC
1.45		4402.11	VV	*-----		0.131	
1.58		7913.97	VV	-----*		0.235	
1.97	1.97	12436.00	VV	*-----	2	0.978	111
2.57	2.59	5396.02	VB	0.10 *	3	0.361	TRI
3.83	3.88	7558.50	PV	*0.146	4	0.175	TOL
4.91	4.99	4139.03	VV	*-----	5	0.322	PER
5.52	5.55	32446.50	VV	0.107	6	1.961	MONOCHLOR
5.90			RP: AREA SUM + ON				
6.80			RP: AREA SUM + OFF				
6.80	6.81	32812.10	++	-----	7	0.975	MS
6.93	6.94	24567.20	VV	*-----	8	0.584	MCTOLUENE
7.11		8616.59	VV	-----		0.256	
7.24		19092.80	VV	-----		0.568	
7.46		38666.20	VV	*-----*		1.150	
7.70			RP: AREA SUM + ON				
8.30			RP: AREA SUM + OFF				
8.30	8.30	2496280.00 +	++	-----	9	59.390	OMP DCB
8.31			RP: AREA SUM + ON				
16.30			RP: AREA SUM + OFF				
16.30	16.30	121595.00	++	-----	10	3.616	MS

MULTIPLIER = 1

I/C INCOMING CO...OSITE ANALYSIS

DEC 05 1985

Period 12, 1985

CLAYTON, NEW JERSEY

Date	Service Center	RC No.	MC	ODB	Tri 1,1,1	CA	MS	Water	Residue	Misc.	Canada
11-5-85	Mineola NY Niagra Falls NY Avon NY Waverly NY Erie PA	I.C. #277	27.41%	25.00%	0.76%	24.00%	2.46%	0	17.00%	3.37%	N/A
	Barre PA										
11-8-85	Tulleytown PA New Kingston PA Chester VA Chesapeake VA Silver Springs MD	I.C. #282	30.32%	23.68%	0.75%	25.00%	2.08%	0	15.00%	3.17%	N/A
11-13-85	Branford CT West Hartford CT Barre VT Latham NY	I.C. #288	25.91%	23.86%	0.65%	26.00%	2.57%	0	18.00%	3.01%	N/A
11-14-85	Congers NY Thornwood NY North Amityville NY	I.C. #289	17.51%	25.11%	0.58%	26.00%	2.87%	0	25.00%	2.93%	N/A
11-20-85	West Chester PA Malvern PA Tulleytown PA Waverly NY Mattydale NY	I.C. #290	29.23%	23.12%	1.83%	24.00%	2.00%	0	17.00%	2.82%	N/A
11-21-85	Baltimore MD Silver Springs MD Glen Burnie MD Chester VA Chesapeake VA	I.C. #291	28.34%	23.88%	1.86%	24.00%	2.09%	0	17.00%	2.83%	N/A
11-26-85	Vincentown NJ Boundbrook NJ Bridgewater MASS Marlboro MASS	I.C. #292	26.91%	23.56%	0.69%	28.00%	2.71%	0	15.00%	3.13%	N/A

I/C INCOMING COMPOSITE ANALYSIS

Period 12 , 1985

CLAYTON, NEW JERSEY

Date	Service Center	RC No.	MC	ODB	Tri 1,1,1	CA	MS	Water	Residue	Misc.	Cana
11-27-85	Woodside NY Ancaster ONTARIO * Pickering ONTARIO * Concord ONTARIO * Nepean ONTARIO *	I.C. #293	31.58%	24.43%	0.10%	24.00%	2.48%	0	14.00%	3.41%	*

Date 5/10/83

TYPICAL CHEMICAL AND PHYSICAL ANALYSES FOR STILL RESIDUE

Solvent Sample Analysis - Summary Report

SK Sample # 3-955 Industrial Solvents Sales Sample #

Material Submitted as: Still Bottoms (Dry Cleaning)

Source or Origin: Miracle Drive Cleaners

(Plant#, Site or Complete Address)

Submitted by: W. Bernhardt

Sample Size 1 pt Represents 0.625 Gallons, in wkly ☐ Drum ☐ Bulk

☐ On Hand ☐ Per Year ☒ Other wkly (Per week, month quarter, etc.)

Tests

API or Sp. Gr. @ 60°F.

Flash Point (ASTM D-56)

Boiling Point (ASTM D-86)

IBP °F.

5

10

20

30

40

50

60

70

80

90

95

EP 260

Distillate 40 vol %

Residue* 58 vol %

Water 2

ODOR

FIA

Aromatics

Saturates

Olefins

K-B

Other (Specify)

Solids

(Centrifuge, distillation, "Green Sheet" definition, other) - specify:

*Type of Residue - oil

COMPOSITION, (VOL. %)

of total sample submitted (by distillation)		of solvent portion of distillate (by G.C.)	
Perc	39.4	Perc	98.6
MS	0.6	MS	1.4
Bottoms	58.0		
water	2.0		

Comments:

Above material is water soluble

RECOMMENDED DISPOSITION:

Accept ☐ Reject ☐

Distribution:

Report by: B. Blair

Rev. 10/82

safety-kleen corp.
655 BIG TIMBER ROAD • ELGIN, ILLINOIS 60120
PHONE 312/697-8460

TECHNICAL SERVICE LABORATORY WORK REQUEST

(Complete All Applicable Blanks)

3-955

Date: May 9, 83

Project No.:

SUBMITTED BY: Wayne Bachardt

MATERIAL SUBMITTED: (Identify the sample or item and indicate its source or origin)
Still Bottoms from Mineral Driver Cleaner (Pure)

Sample Size _____ Represents — ☐ Drum ☐ Bulk .625 Gallons ☒ Per Month ☐ Per Year

SPECIFIC INFORMATION REQUESTED:

☐ SAFETY-KLEEN PRODUCT: (Explain, in detail - customer complaint, etc.)

☒ MISC. SOLVENTS: (NEW — Determine suitability for S-K use. SPENT or contaminated solvent or fuel — Determine suitability for S-K reclamation).

☒ OTHER MATERIALS: (New or Competitive product, or Miscellaneous items — tests to be performed or work to be done — List, in detail, information requested, i.e., performance evaluation, analyses, cost to duplicate, etc.)
Identify Contaminants. Determine amount (%) of "Pure" that SK could recover

SAFETY-KLEEN CORP.

Sheet 3 of 3

2.61

OV: START PRGM RATE 1

5.23

[illegible]

OV: START FINAL TIME 1

[illegible]

RT: STOP RUN

[illegible] 5890A SAMPLER INJECTION @ 10:35 MAY 10, 1983
SAMPLE # : ID CODE :
27 3955

NORM %

RT	EXP RT	AREA	TYPE	WIDTH	CAL	AMOUNT	NAME
0.00			BASELINE @ START RUN = 6.10				
0.00			THRESHOLD @ START RUN = 4				
0.00			PEAK WIDTH @ START RUN = 0.04				
0.00			RP: REJECT = 500				
5.23	5.23	1751250.00	BV	-------	5	39.444	PERC
5.60			RP: AREA SUM = ON				
16.30			RP: AREA SUM = OFF				
16.80	17.03	61165.80	++	-----	6	0.556	MS

MULTIPLIER = 0.4

DISTILLATE CONC OF SAMPLE LISTED BELOW
ID CODE 3955

[illegible] 5890A SAMPLER INJECTION @ 10:35 MAY 10, 1983
SAMPLE # : ID CODE :
27

NORM %

RT	AREA	TYPE	CAL	AMOUNT	NAME
5.23	1751250.00	BV	5	98.610	PERC
16.80	61165.80	++	6	1.390	MS

MULTIPLIER = 1

safety-kleen corp.

Date 10/24/84

(3 Pages)

Solvent Sample Analysis - Summary Report

SK Sample # 3186 Industrial Solvents Sales Sample #

Material Submitted as: Dry Cleaning Filter Powder (Muck)

Source or Origin: T Mueller

(Plant#, Site or Complete Address)

Submitted by: T. Mueller

Sample Size 7 qt Represents 4 Gallons, in ☒ Drum ☐ Bulk

☐ On Hand ☐ Per Year ☐ Other (Per week, month, quarter, etc.)

Tests

API or Sp. Gr. @ 60°F.

Flash Point (ASTM D-56)

Boiling Point (ASTM D-86)

IBP °F.

5

10

20

30

40

50

60

70

80

90

95

EP

ODOR

FIA

Aromatics

Saturates

Olefins

K-B

Other (Specify)

Solids

(Centrifuge, distillation, o "Green Sheet" definition, o other) - specify:

*Type of Residue -

Distillate vol %

Residue* vol %

Water vol %

COMPOSITION. (VOL. %)

of total sample submitted (by distillation)	%wt	of solvent portion of distillate (by G.C.)
water	4.0	
HC	0.14	
Hol	0.13	
Eol	0.54	
Tol	0.13	
Per	13.92	
xylene	0.21	
MS	1.55	
unknowns MS	0.44	
Bottoms	78.94	

Comments:

RECOMMENDED DISPOSITION:

Accept ☐ Reject ☐

Distribution: T. Mueller, M. Levy

Report by: R. Blair

Rev. 10/82

SAFETY-KLEEN CORP.

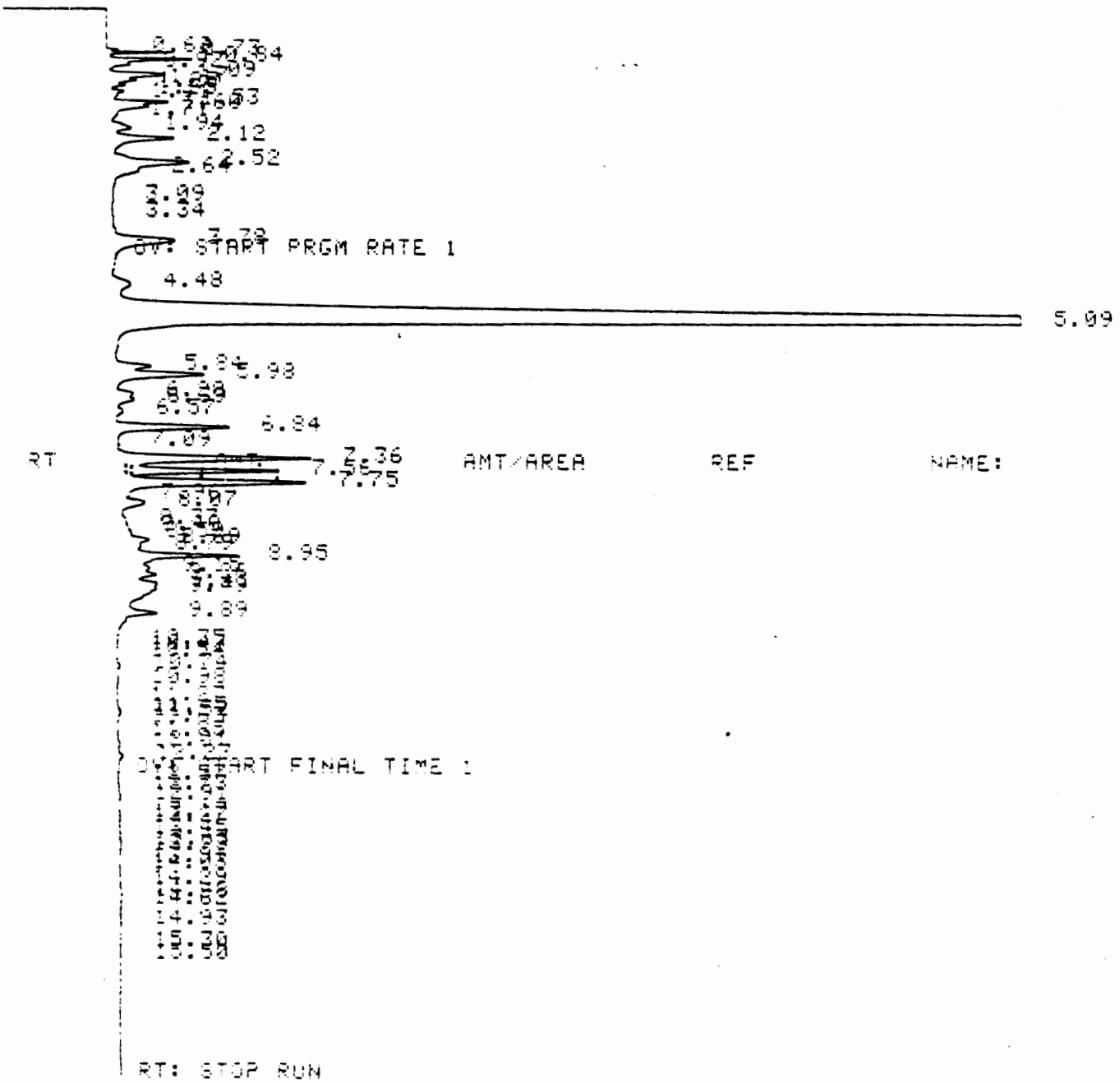

REPORT
5880A SAMPLER INJECTION @ 13:31 OCT 24, 1984
P'E # : ID CODE :
30 3186

% COMPENSATED ANALYSIS

	EXP RT	AREA	TYP	WIDTH	CAL	AMOUNT	NAME
0		BASELINE @ START RUN = 2.68					
0		THRESHOLD @ START RUN = 4					
0		PEAK WIDTH @ START RUN = 0.04					
0		RP: REJECT → 500					
8		1339.52	BV	-----		2.453E-03	
3		6427.94	VV	0.025		1.177E-02	
4		14479.70	VV	*-----		2.651E-02	
2		4492.74	VP	-----		8.227E-03	
9		16956.00	PV	-----		3.105E-02	
7	1.16	5315.12	VV	-----	1	5.440E-02	MC
5		2715.13	VP	-----		4.972E-03	
5		2225.60	PV	-----		4.075E-03	
1		635.25	VV	-----		1.163E-03	
3		11682.40	BV	-----		2.139E-02	
9		9766.30	VV	-----		1.788E-02	
		1391.06	VP	-----		2.547E-03	
	1.96	8129.70	PV	*-----	2	5.200E-02	111
		22457.20	VV	0.092		4.295E-02	
	2.57	35808.00	VV	*-----	3	0.185	TRI
		8795.83	VB	-----		1.611E-02	
		544.93	BP	-----		9.979E-04	
		1141.43	PV	-----		2.090E-03	
	3.82	42268.30	VV	*0.159*	4.	7.440E-02	TOL
		13710.60	VV	-----		2.511E-02	
	5.09	1168210.00 +	VV	0.175*	5	4.304	PER
		RP: AREA SUM → ON					
		RP: AREA SUM → OFF					
	6.49	74218.50	++	-----	7	0.120	XYLENE
		RP: AREA SUM → ON					
		RP: AREA SUM → OFF					
	14.73	526315.00	++	-----	6	0.991	MS

.IER = 0.06

TBL NORM%
E # : ID CODE : MULTIPLIER :

PRINTED IN U.S.A.
195
RECORDING CHARTS
GRAPHIC CONTROLS CORPORATION BUFFALO NEW YORK

SAFETY-KLEEN CORP. MATERIAL ACCEPTANCE SPECFICIATION	S-K Part No. 6617 Original Date April 8, 1976 Revision Date Supersedes New Written by L. Dean Hufsey Approved by A. A. Manteuffel
Material: Safety-Kleen Solvent #105(MS)	

SCOPE

This specification covers a high flash, hydrocarbon solvent suitable for use in a degreasing application.

REQUIREMENTS

The solvent shall conform to the following requirements:

	Typical Values	Control Values	Test Method
API Gravity, 60° F.	46-51	-	ASTM D-287-67
Specific Gravity 60/60° F.	0.775-0.797	-	-
Pounds/Gallon	6.46 -6.64	-	-
Initial Boiling Point, ° F.	310-320	310 Min.	ASTM D-86-67
50% recovered, ° F.	340	-	-
End Point, ° F.	380-400	400 Max.	ASTM D-86-67
Kauri Butanol Value	34	-	-
Aniline Cloud Point, ° F.	144	150 Max.	ASTM D-1012-69
Flash Point, ° F., TCC	109	105 Min.	ASTM D-56-70
Saturates, %	90	-	-
Olefins, %	1	-	-
Aromatics, %	9-12	17.0 Max.	ASTM D-1319-70
Odor	Clean - Mild	Must be acceptable	-

All lots or deliveries with properties outside the maximum or minimum "control values" will be considered of unsuitable quality.

The solvent shall contain the following additives:

1. Approximately 0.0028 Wt. % of Liquid Oil Green Dye (7.9 fluid ounces per 1,000 gallons of solvent). (May be purchased from DuPont, Petroleum Chemicals Division.)

2. Anti-Static Additive to be added by supplier. Any one of the following:

   A. Shell ASA-3 - One part per million (1 ppm) minimum (Shell Chemical Company)
   B. Ashland AC-5 - Five parts per million (5 ppm) minimum (Ashland Chemical Company)
   C. Ethyl 48 - Five parts per million (5 ppm) minimum (Ethyl Corporation)

SAFETY-KLEEN CORP. MATERIAL ACCEPTANCE SPECIFICATION	S-K Part No. 6631 Original Date June 24, 1977 Revision Date April 26, 1985
Material: Immersion Cleaner & Cold Parts Cleaner 609	Supersedes August 20, 1979 Written by L. Dean Hufsey Approved by

SCOPE

The specification covers a two-phase liquid product consisting of an aqueous layer on top and a chlorinated solvent, cresylic acid layer on the bottom for cleaning carburetors and metal parts. The ratio of the two liquids that are combined to for the cleaning product is 1.0 parts by volume of the aqueous layer and 4.0 parts by volume solvent layer.

COMPOSITION

Immersion Cleaner and Carburetor and Cold Parts Cleaner #609 products consist of the following materials:

WATER PHASE		
Water	16.840 Wt.%	20.00 Vol.%
SOLVENT PHASE		
Inhibitor 60S	0.389 Wt.%	0.5 Vol.%
Triethanolamine	0.474 Wt.%	0.5 Vol.%
Petroleum Sulfonate	7.389 Wt.%	8.5 Vol.%
Methylene Chloride	31.691 Wt.%	28.5 Vol.%
Orthodichlorobenzene	31.345 Wt.%	28.5 Vol.%
Cresylic Acid	11.872 Wt.%	13.5 Vol.%
	100.000 Wt.%	100.0 Vol.%

Immersion Cleaner and Carburetor
and Cold Parts Cleaner #609

REQUIREMENTS

	Typical Values	Control Values	Test Method
Color (solvent phase)	Clear, light amber liquid	Clear, light amber liquid	
Specific Gravity, 60/60°F	1.24	1.2300-1.2500	ASTM D-1298
Pounds/Gallon, 60°F	10.33	10.25-10.41	-
Caustic Extraction	-	19 Vol.% min. cresylic acid	(Lab. Std. method "Extraction of cresylic Acids from Immersion Cleaner Solvent" May 9, 1979)
Emulsifiability	The quick breaking emulsion shall have a light tan creamy appearance. After the water has split out, the water layer should amount to only 17-18 ml.		(Lab. Std. "Emulsifiability of Immersion Cleaner and water)

Recycled Perchloroethylene for Dry Cleaning

Specifications

Physical Test	Specification
Specific Gravity $20^{o}C/20^{o}C$	1.61 - 1.63
Pounds Per Gallon	13.4
Appearance	Clear, Free of Sediment Suspended Material
Color, APHA	25 maximum
Water, PPM	50 maximum
Purity: Perchloroethylene by Volume % G.C.	99.5 minimum
Impurities: Other halogenated	.5% maximum
Other hydrocarbons	.5% maximum
Odor	Characteristic; no residual
Spot Test	No Spot or Stain
Nonvolatile Residue, ppm	50 maximum
Acid Acceptance	.02 maximum

TABLE D-1

PARAMETERS AND RATIONALE
FOR HAZARDOUS WASTE ANALYSES

Hazardous Waste	Parameter	Rationale
Used Mineral Spirits	Flash Point EP Toxicity (Lead)	Ignitable characteristic (D001). Lead content = 5 ppm (D008).
Mineral Spirits Tank Bottom Sediment and Free Water	Flash Point EP Toxicity (Cadmium, Lead)	The sediment has a flash point of less then 140° F (D001) and the sediment and free water may contain cadmium and lead at greater than EP Toxic levels (D006, D008).
Mineral Spirits Dumpster Sediment	Same as number 2.	Same as number 2.
Used Immersion Cleaner	Methylene Chloride Orthodichlorobenzene Cresylic Acid	Formula contains these ingredients: F002 and F004.
Dry Cleaning Wastes	Perchloroethylene	Contain this ingredient (F002).

TABLE D-2

PARAMETERS AND TEST METHODS

Parameter	Test Method	Reference
Flash Point	Setaflash closed cup tester	U.S.EPA Method 1020 (ASTM Method D327-78)
Boiling Range (to determine % water, mineral spirits and other solvents)	Distillation of Petroleum	ASTM Method D86-78
API Gravity	Hydrometer method	ASTM Standard D287-67
EP Toxicity	EP Toxicity test procedure	U.S.EPA Method 1310
Hydrocarbons and Volatile Organics	Gas Chromatography (GC)	U.S. EPA Methods 8010, 8015, 8020 and 8120

TABLE D-3

METHODS USED TO SAMPLE HAZARDOUS WASTES

Hazardous Waste	Reference for Sampling	Description of Sampling Method	Sampler
Used Mineral Spirits	Sampling a tank "Samples & Sampling procedures for Hazardous Waste Streams" EPA-600/2-80-018	Test Methods for the Evaluation of Solid Waste Physical/Chemical Methods, SW846, U.S. EPA Section 1.2.1.1	For tanks - Coliwasa Tube
Mineral Spirits Tank Bottom Sediment and free water	Same as number 1	Same as number 1	Same as number 1
Mineral Spirits Dumpster Sediment	Sampling a drum "Samplers & Sampling Procedures for Hazardous Waste Streams" EPA-600/2-80-018	Same as number 1	Representative composite sample using a Coliwasa tube
Used Immersion Cleaner	Same as number 3	Same as number 1	Same as number 3
Dry Cleaning Wastes	Same as number 3	Same as number 1	Same as number 3

TABLE D-4

FREQUENCY OF ANALYSIS

Hazardous Waste	Analysis	Frequency
Used Mineral Spirits	Flash Point EP Toxicity (Lead)	Flash Point/every load EP Toxicity/as required
Mineral Spirits Tank Bottom Sludge and Free Water	Flash Point EP Toxicity (Cadmium and Lead)	Flash Point/every month EP Toxicity/ every quarter
Mineral Spirits Dumpster Mud	Flash Point EP Toxicity (Cadmium and Lead)	Annually or as required
Used Immersion Cleaner	Methylene Chloride Orthodichlorobenzene Cresylic Acid	Every load
Dry Cleaning Wastes	Perchloroethylene	Annually or as required

Appendix E

Equipment Information

FACILITY INSPECTION RECORD AND PROCEDURE

PERIOD _____ WEEK _____ BEGINNING DATE OF WEEK _____

Item*		Mon	Tue	Wed	Thur	Fri	Remarks/Corrective Action (Attach additional sheet, if necessary)
	M.S. Solvent Tank Readings						
#1	Clean (inches	____					
#2	Clean (gallons)	____					
#1	Used (inches)	____	____	____	____	____	
#2	Used (gallons)	____	____	____	____	____	
#3	Used - Sludge (inches)	____					
#4	Used - Water (inches)	____					
#5	Solvent Dispensing Hose	____	____	____	____	____	
#6	Pump Valves and Pipe Fittings	____					
#7	Tank Inspection	____	____	____	____	____	
#8	Drum Storage	____	____	____	____	____	
#9	Clean	____					
#9	Used	____	____	____	____	____	
#10	Storage & Containment Systems	____					
#11	Loading/Unloading Area	____	____	____	____	____	
#12	Used - Labeling & Damages	____	____	____	____	____	
#13	Route Vehicle Check	____	____	____	____	____	
#14	Safety Equipment	____	____	____	____	____	
#15	Wet Dumpster	____					
#16	Dry Dumpster	____					
#17	Fire Extinguishers	____					
#18	Eye Wash & First Aid Kit	____					
#19	Absorbent	____					
#20	Security Gates and Locks	____	____	____	____	____	
#21	Security Fence	____					
#22	Certification of Inspector	____	____	____	____	____	

*See instructions on reverse side of form.

500-08-05
R/12/85

B4270-RH1

Item #1 Check high level alarm, if available. Measure depth of solvent in inches. Record reading in inches. Contents not to exceed 95% of tank capacity.

Item #2 — Convert tank readings from inches to gallons using an outage table.

Item #3 — Measure sludge depth and record reading in inches.

Item #4 — Measure depth of water and record reading in inches. Use water finding paste (S-K Part No. 3339, New Berlin).

Item #5 — Inspect solvent dispensing hose, connections and valves for any leaks or damage that could cause a leak to develop. All hose should be drained and the contents discharged into the storage tank.

Item #6 — Check pump, pipe and fittings for leakage.

Item #7 — Underground tanks should be checked to prevent overflow and to detect evidence of leaks such as unexpected deviation in tank measuring data or excess water. Aboveground tanks should be checked for damage (such as rust) and the containment should be checked for deterioration. Excess water in the clean solvent tank should be transferred to the used solvent tank.

Item #8 — Inspect the drum storage area for damage to the containment and/or drums.

Item #9 — Record the number of drums on hand.

Item #10 — Inspect for deterioration and failure of the containment system and container placement and stacking.

Item #11 — Inspect loading/unloading area for spillage.

Item #12 — Check to make sure all used drums are properly labeled and marked. Drums shall be inspected for damages or rust to the point of near leakage. Damaged, missing, or loose fasteners shall be replaced and adjusted.

Item #13 — Each route vehicle at the facility must be inspected daily to insure the proper operation of brakes, lights, turn signals, emergency flashers, and wipers.

Item #14 — Route vehicle safety equipment check, including absorbent, eyewash, fire extinguisher, first aid kit and reflector kits. Any equipment that is inoperative or unavailable shall be immediately replaced or repaired.

Item #15 — Inspect wet dumpster and its containment for leaks and excess dumpster mud built up.

Item #16 — Inspect dry dumpster to insure that no liquids are being placed in the unit.

Item #17 — Fire extinguishers must be checked to insure that the tag date has not expired and that the units are properly charged and accessible. Must be inspected by a fire service supplier on a yearly basis.

Item #18 — The eyewash stand shall be inspected for accessibility weekly. Check its operation as well. Check inventory of first aid kit.

Item #19 — Check absorbent supply in Service Center (S-K Part No. 8890).

Item #20 — Security gates and locks must be checked for sticking, corrosion, or other damage.

Item #21 — Security fence must be checked for deterioration, gaps under fence, and broken wire ties.

Item #22 — Inspector must certify that he has completely inspected facility.

EMERGENCY EQUIPMENT LIST

The following equipment shall be located in the locker room area and the supply checked monthly:

Gloves - The rubber or plastisol gloves sold by Safety-Kleen are to be used when handling the solvents.

Safety Glasses or Face Mask - Whichever the worker prefers, is to be worn when loading or unloading the solvent.

Plastic Aprons - Are available for the situations where a solvent may get on the worker's clothing.

Decontamination of all equipment is accomplished by washing with soap and water.

Eye Wash Stand---Normally the eye wash is located centrally at the Service Center. At larger centers, several eye wash stands are provided. The workers should try the stand and be familiar with its operation. The eye wash stand should be checked once a week for operation.

Showers---Should be checked periodically to ascertain that they are operational. Located in locker room area.

Ventilation---Any area that is closed and collects vapors should be avoided or equipped with proper fans to insure adequate ventilation.

Fire Extinguisher---Each center should have a minimum of two 10-pound ABC extinguishers, located at the points where solvents are transferred. An ABC extinguisher is a universal system used on paper, wood and electrical, as well as solvent fires. The extinguishers must be full and carry an inspection tag. The accepted extinguisher is available as S-K part no. 4009.

Absorbent Material---An adequate supply (200 sheets, 2 bales) should be on hand to handle small spills. Located in the loading and unloading area and warehouse. S-K Part No. 8890.

CONSTRUCTION SPECIFICATIONS
16 GALLON STEEL BARREL
PART NO. 3317

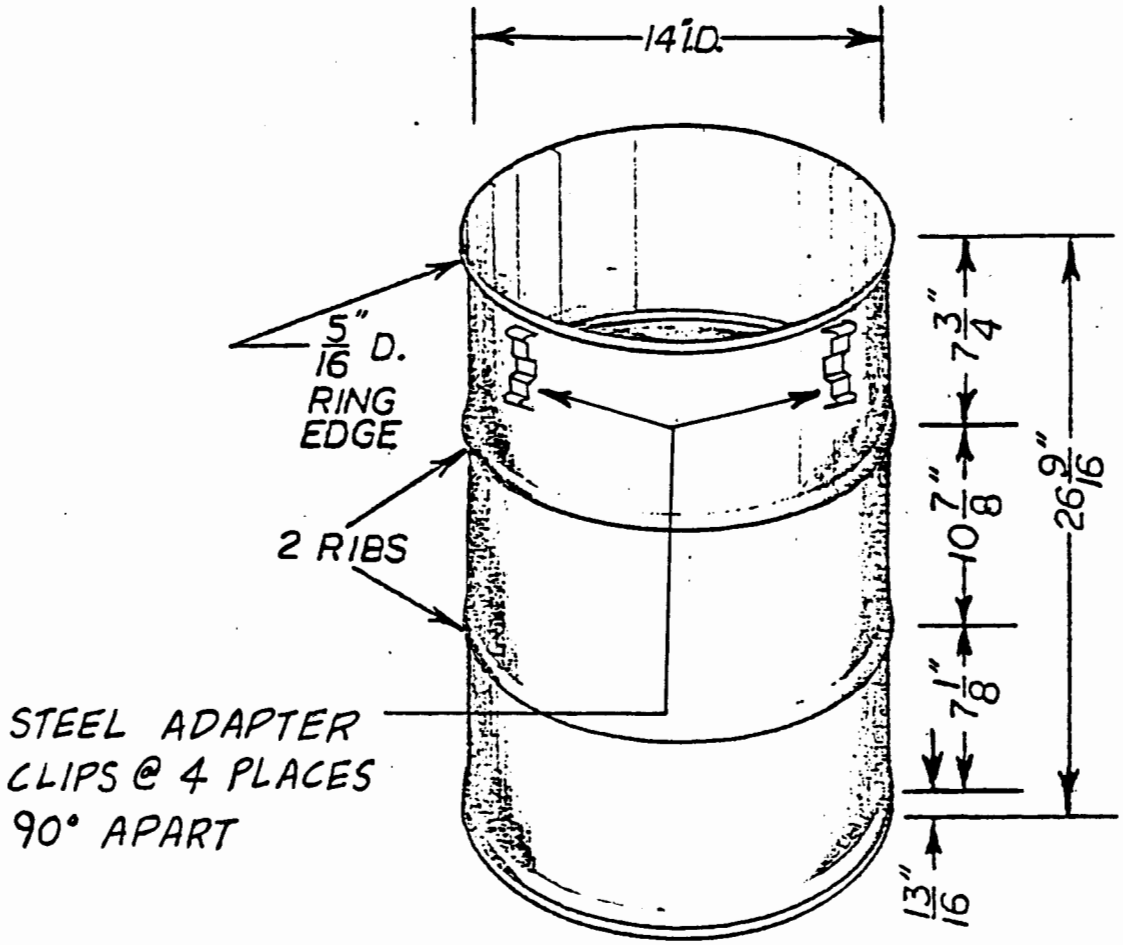

ADDITIONAL SPECIFICATIONS

1. No Bungs or Bungholes
2. Rust Preventive Coating Interior
3. Without Top Cover or Locking Ring
4. Open Head Top
5. Leak Proof - Airtest (7 Lb. pressure)
6. 20 Gauge Steel

2-23-71
100-11-07

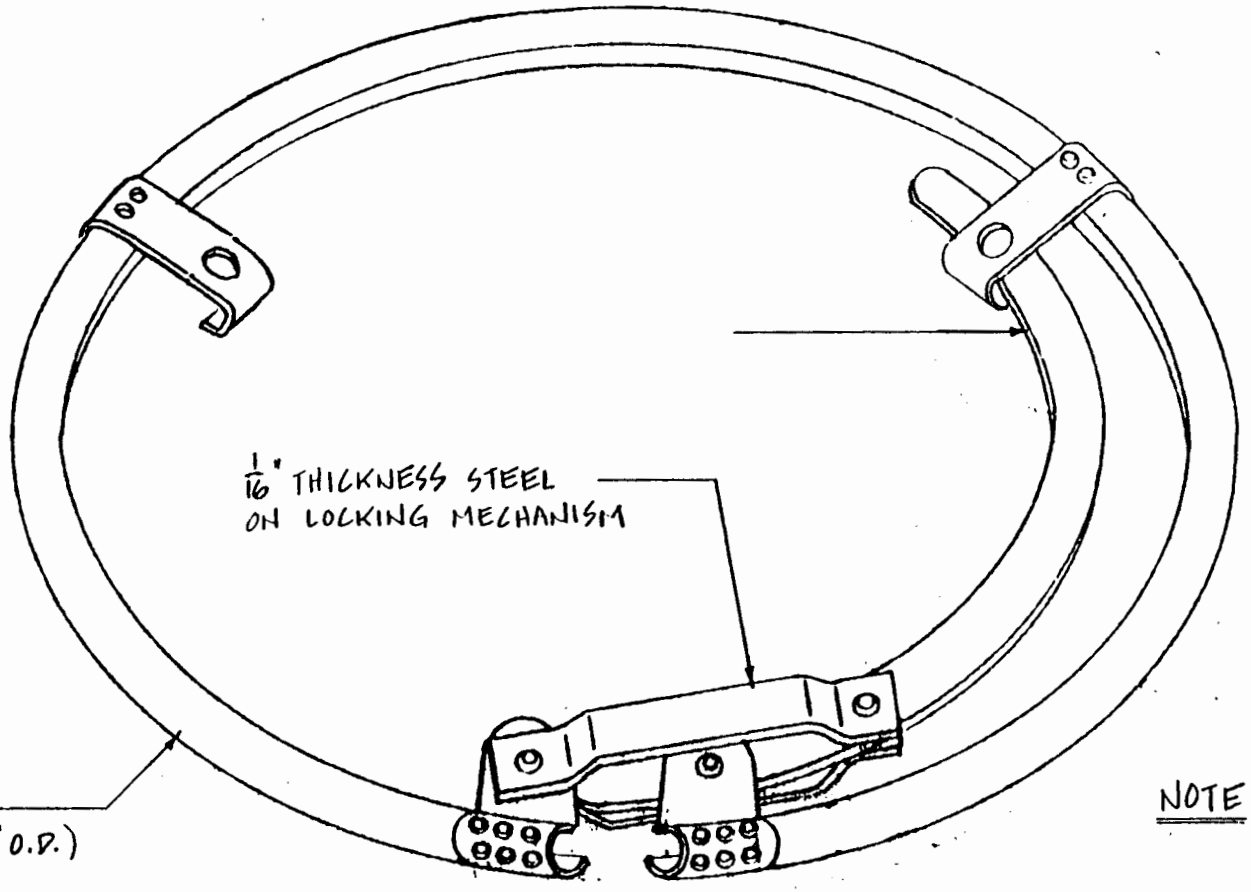

NOTE: ONE SHOP COAT
OF SILVER PAINT

• CLAMP RING FOR 16 GALLON DRUM DETAILS •

SAFETY · KLEEN PART NO. 3319

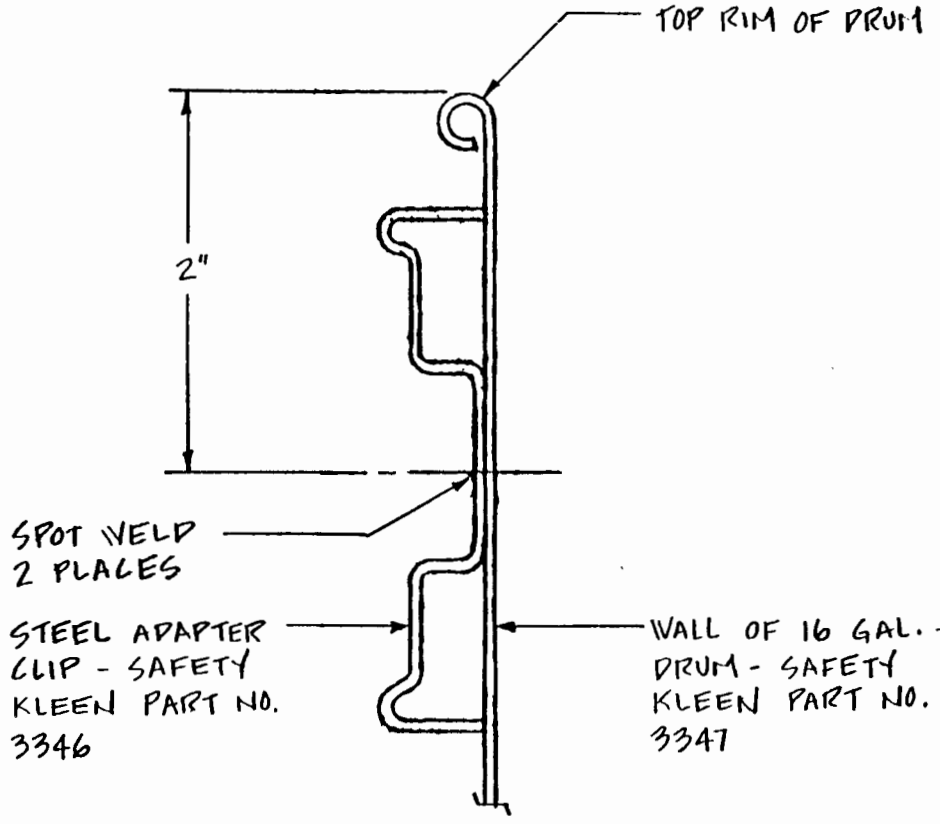

-SECTION A·A-
FULL SCALE

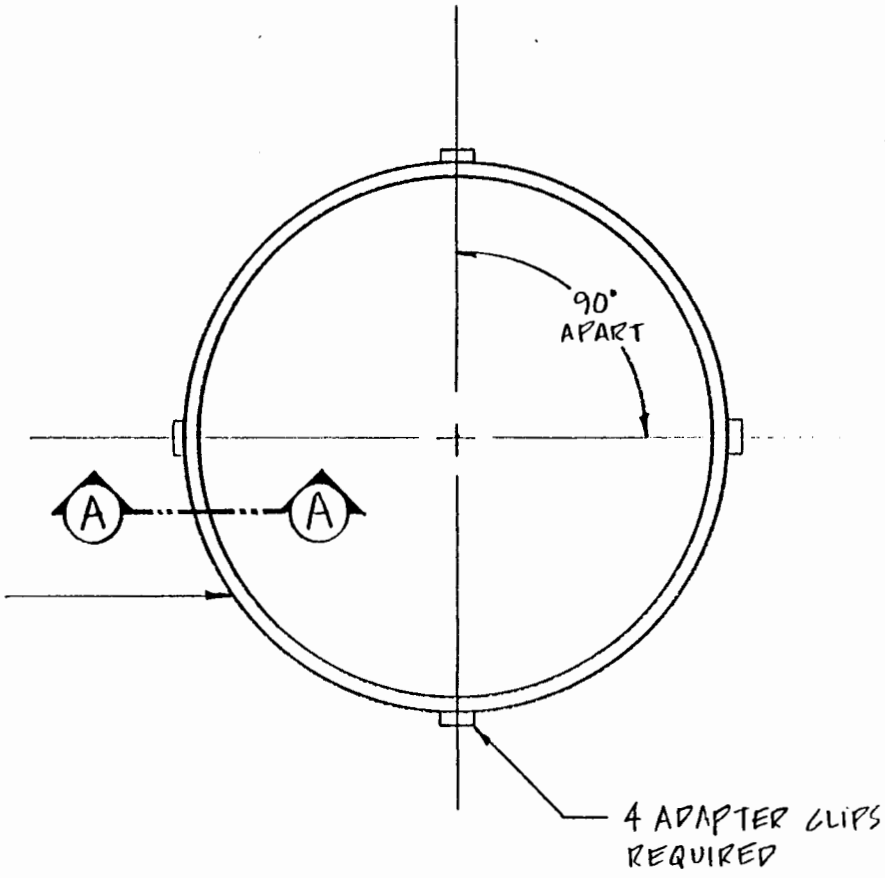

-TOP VIEW OF DRUM-

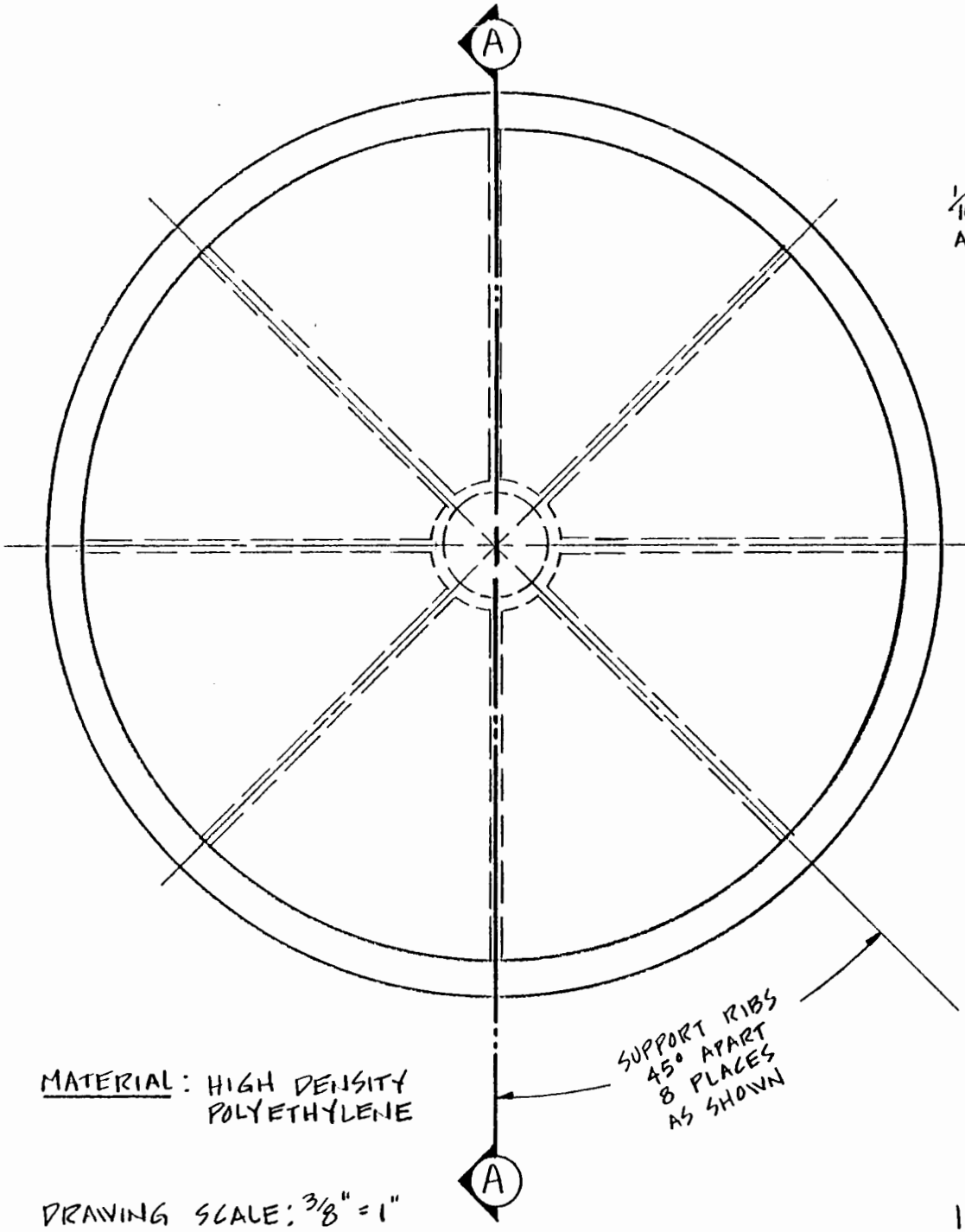

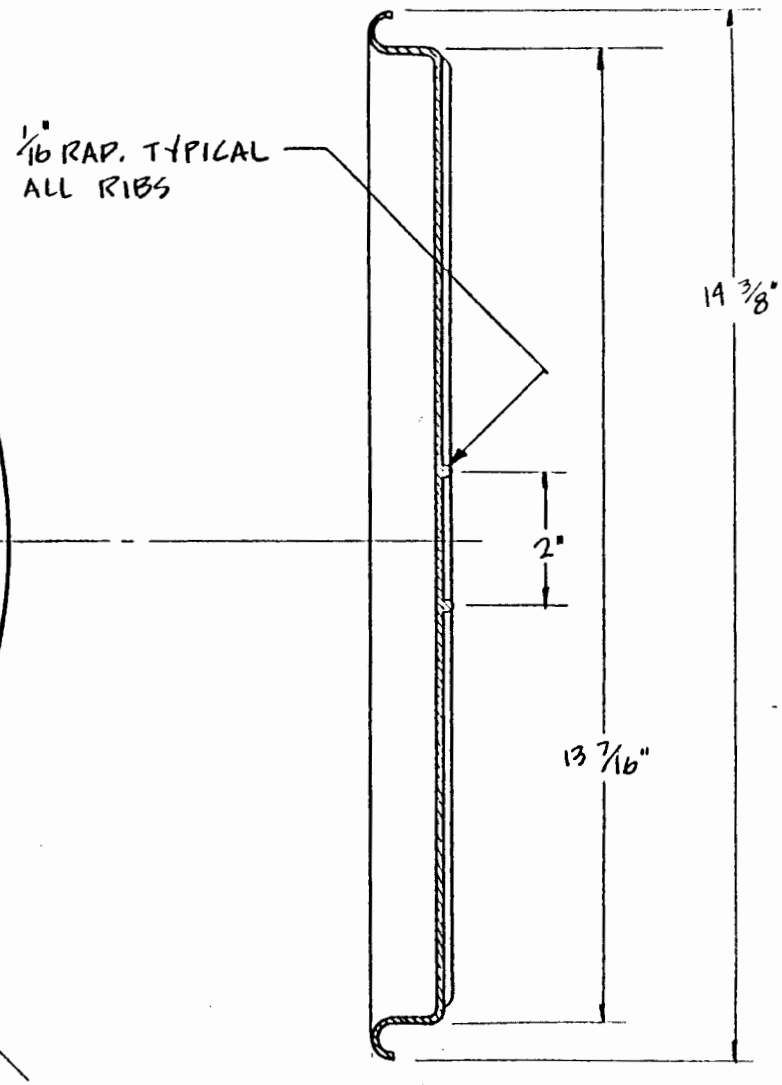

- SECTION A·A -

MATERIAL: HIGH DENSITY POLYETHYLENE

DRAWING SCALE: 3/8" = 1"

16 GAL. DRUM LID DETAILS
SAFETY·KLEEN PART NO. 3344

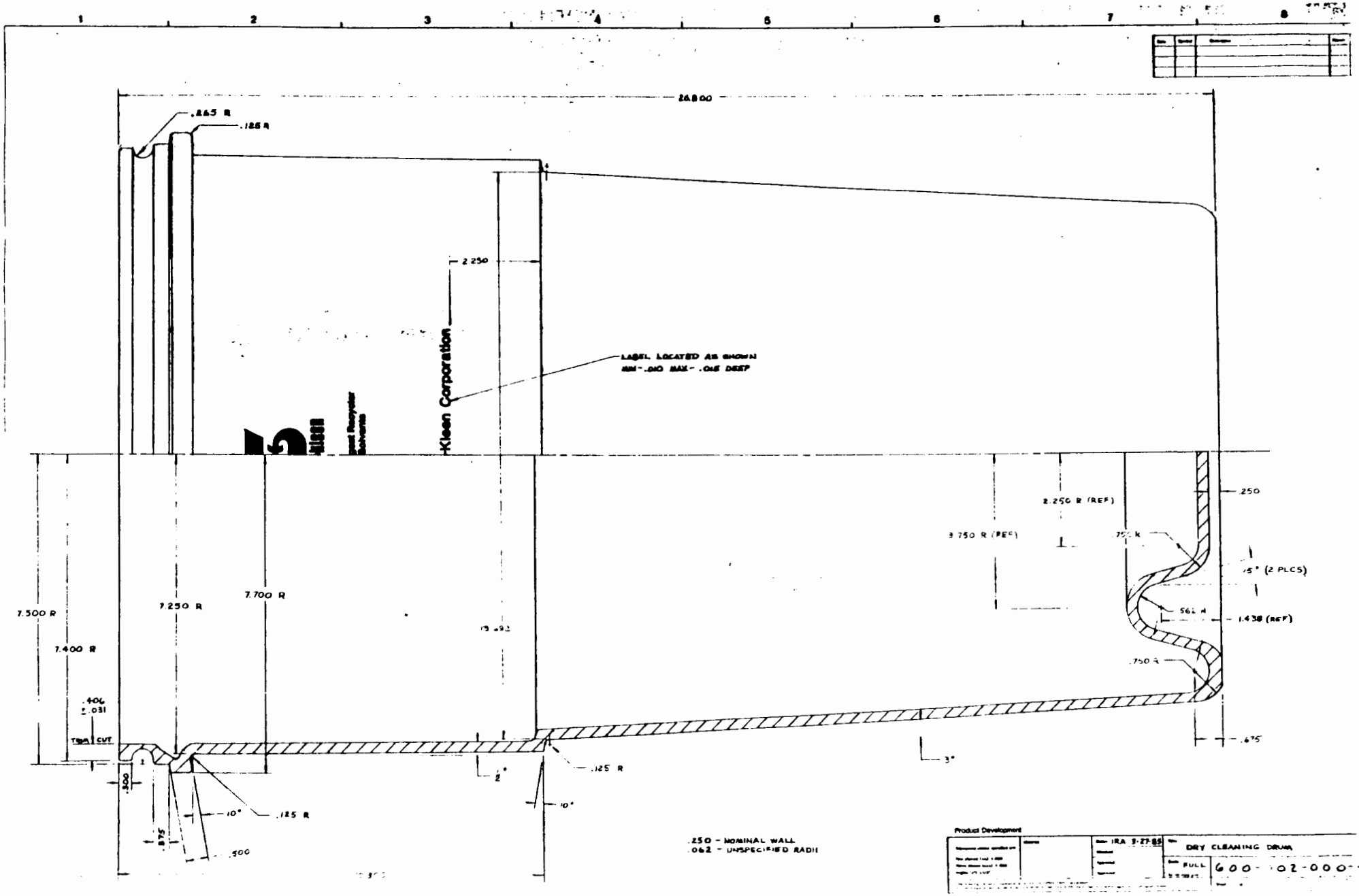
1
2
3
4
5
6
7
8
26.800
.265 R
.125 R
2.250
Kleen Corporation
LABEL LOCATED AS SHOWN
MIN - .010 MAX - .015 DEEP
2.250 R (REF)
3.750 R (REF)
.250
.75° (2 PLCS)
1.438 (REF)
.750 R
.675
7.500 R
7.400 R
7.250 R
7.700 R
.406
±.031
TRIM CUT
.300
.875
.500
10°
.125 R
2°
3°
.250 - NOMINAL WALL
.062 - UNSPECIFIED RADII
Product Development
IRA 3-27-85
DRY CLEANING DRUM
FULL
600-102-000

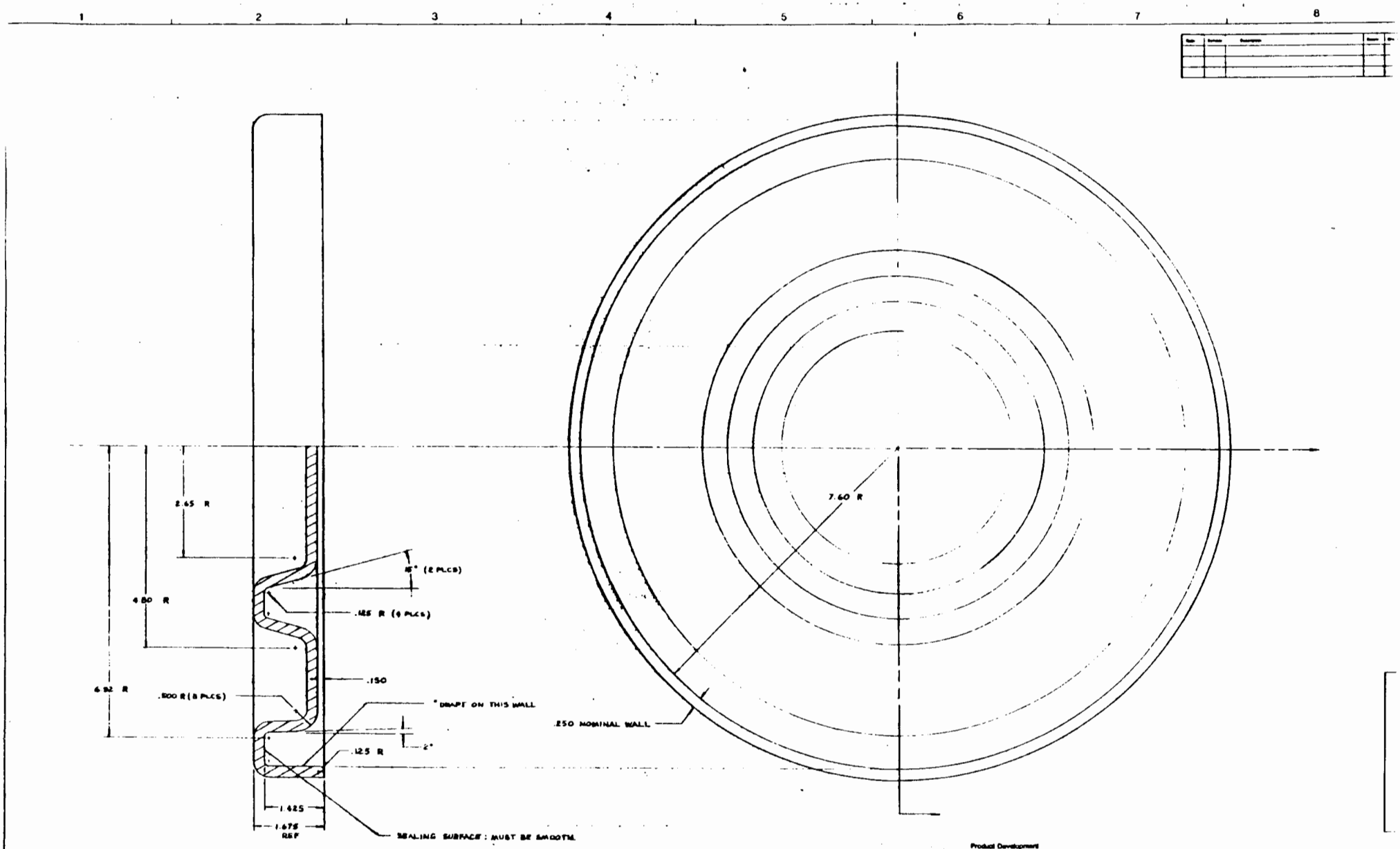

Product Development

Tolerances unless specified are: Two places (xx) ± .005 Three places (xxx) ± .010 Angles 30' ± 1/2°	Material: HIGH DENSITY POLYETHYLENE BLACK SMOOTH FINISH	Drawn IRA 6-18-85 Checked TK 6-18-85 Approved Approved	Title: DRY CLEANING DRUM COVER
			Scale: FULL
			600-005-101-4
			Sheet 1 of 1
			SK 895

Safety Kleen Corporation, 777 Big Timber Road, Elgin, Illinois 60120

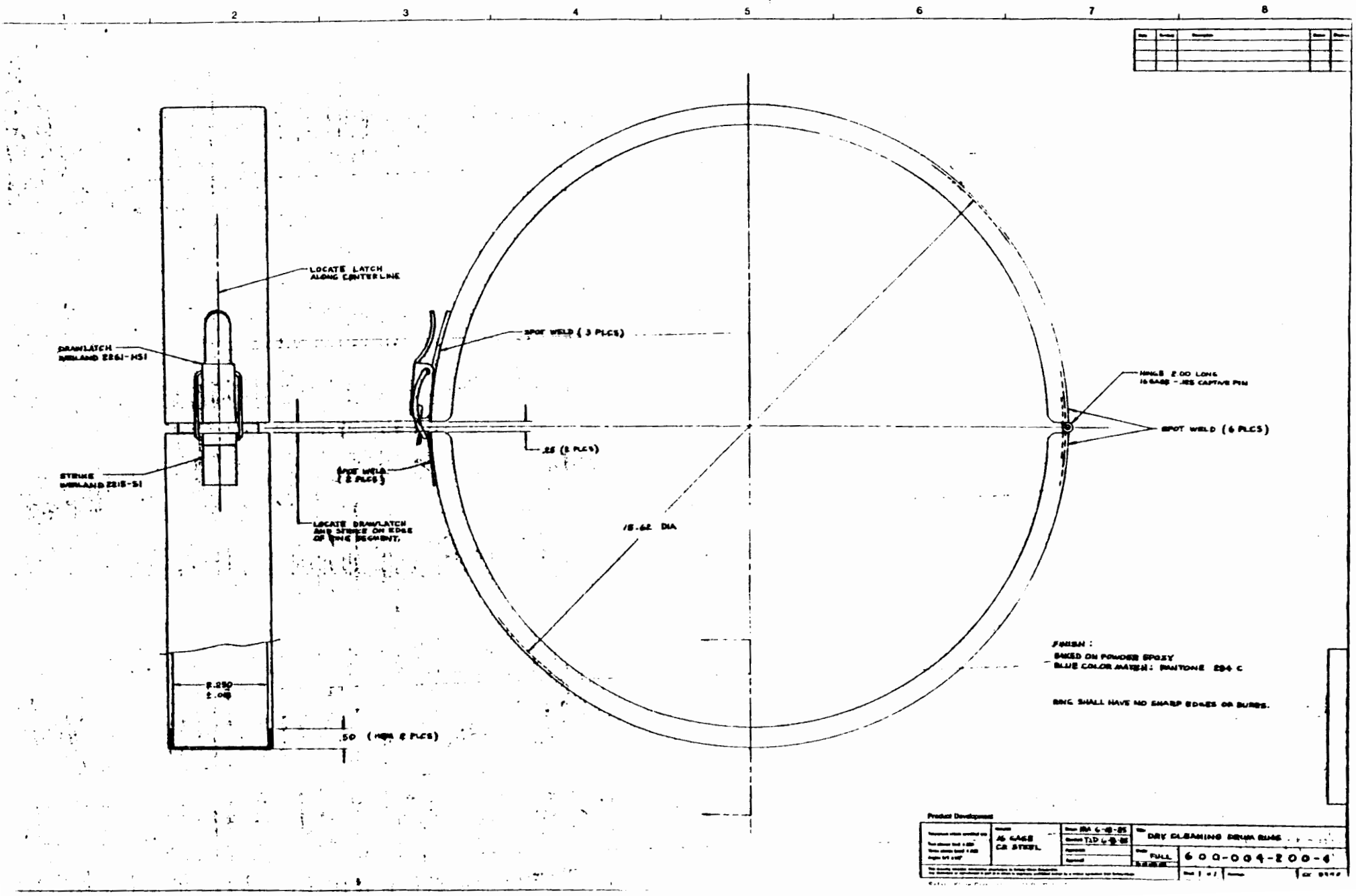
LOCATE LATCH ALONG CENTERLINE
DRAWLATCH WINLAND 2261-HSI
STRIKE WINLAND 2215-SI
SPOT WELD (3 PLCS)
SPOT WELD (2 PLCS)
LOCATE DRAWLATCH AND STRIKE ON EDGE OF RING SEGMENT.
.25 (2 PLCS)
18.62 DIA
HINGE 2.00 LONG 16 GAGE - .125 CAPTIVE PIN
SPOT WELD (6 PLCS)
R.250 ±.010
.50 (MIN 2 PLCS)
FINISH :
BAKED ON POWDER EPOXY
BLUE COLOR MATCH : PANTONE 294 C
RING SHALL HAVE NO SHARP EDGES OR BURRS.
Product Development
AS 6468
CR STEEL
DRY CLEANING DRUM RING
FULL
600-004-200-4

SAFETY KLEEN CORP.

ENGINEERING CHANGE ORDER

E.C.O. NO.: 402

DATE: 4/18/86

PAGE: 1 OF 11

CHANGE: ☐ **RELEASE:** ☒

REQUESTED BY:		
John Lucks	John Paul Kusz	John Paul Kusz

REASON FOR REQUEST:

New product to replace steel drum

DISTRIBUTION CHART

DESTINATION	E.C.O.	B.O.M.	DWG.	C.N.
PRODUCTION	X	X	X	X
INVENTORY CONT.	X	X		X
Q.C.	X			X
PRODUCT DEV.	X	X	X	X
PURCHASING	X		X	X
MARKETING	X			X
PRODUCT. SUPPORT	X			X

DESCRIPTION:

3302	R	603-001-100-11	Box, Std DC Filt	sheet 1 of 3
		603-001-100-32	Printing Layout	sheet 2 of 3
		603-001-100-33	Assembly Instructions	sheet 3 of 3
3303	R	603-002-100-1	Bag, Std DC Filt Bx	
3307	R	603-003-100-1	Tray, Std DC Filt Bx	
3305	R	603-004-100-1	Tape, Std DC Filt Bx	
3310	R	603-005-100-1	Disp. Filt Bx Tape	

Date	Symbol	Description	Drawn	Checked
4/18/86	--	Released ECO 402	SRT	JPK

BOX -- STANDARD DRY-CLEANING FILTER

Configuration: Die-cut, turkey-fold lock container requiring no taping.

Material: 275-pound-test, double-wall craft glued cartons with Michelman coating for water resistancy.

Size: Inside dimensions to be 16 9/16" x 16 9/16" x 15" deep.

Other Required Features: Container to have instructions for proper assembly on two upper flaps as indicated in Safety-Kleen drawing # 603-001-100-32 (sheet 2) and # 603-001-100-33 (sheet 3).

Qualified Vendor(s): Mack Chicago Container Corp., Chicago, Illinois.

Product Development

Tolerances unless specified are: Two places (xx) ±.020; Three places (xxx) ±.005; Angles (x°) ±1/2°	Material:	Drawn: SRT Checked: JPK Approved: JPK Approved:	Title: Box, Std DC Filt Scale: Do not scale print	603 — 001 — 100 — 11

This drawing contains information proprietary to Safety-Kleen Corporation.
Any disclosure or reproduction in part or in whole is expressly prohibited except by a written agreement from Safety-Kleen.

Sheet 1 of 3 | Revision: | P/N 3302

Safety-Kleen Corporation, 777 Big Timber Road, Elgin, Illinois 60120

REVISIONS				
ECO	REV	DESCRIPTION	DATE	APPROVED
402	-	RELEASED	4-18-86	VPK

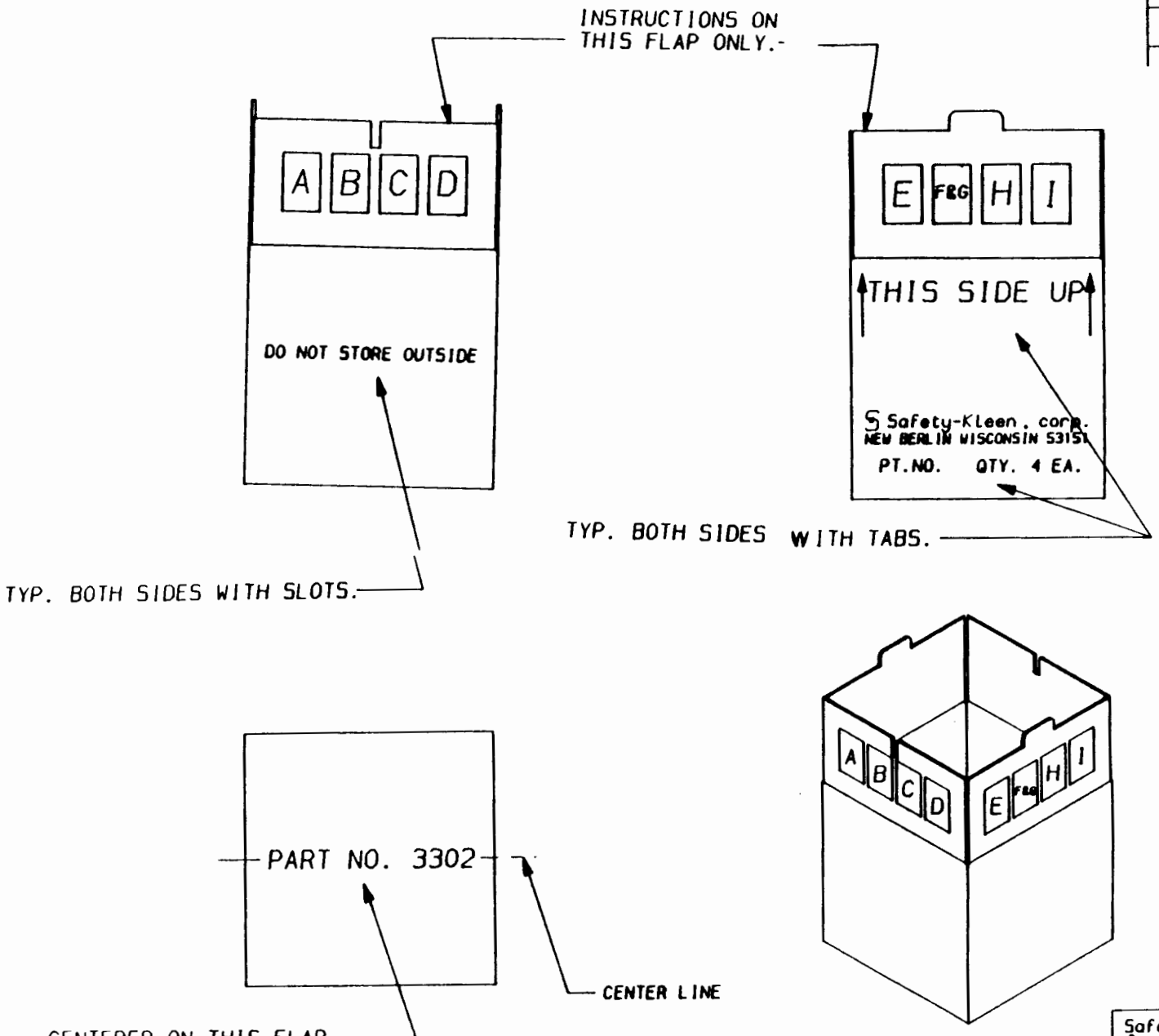

Safety-Kleen Corporation 777 Big Timber Rd. Elgin IL. 60120 (312)697-8460	Product Development		
	BOX, STD. D.C. FILT.		
T. Danowski 2-11-86	C	603	603-001-100-32
	NONE	3302	SHEET 2 OF 3

603-001-100-32 Z

REVISIONS				
ECO	REV	DESCRIPTION	DATE	APPROVED
402	-	RELEASED	4-18-86	JAE

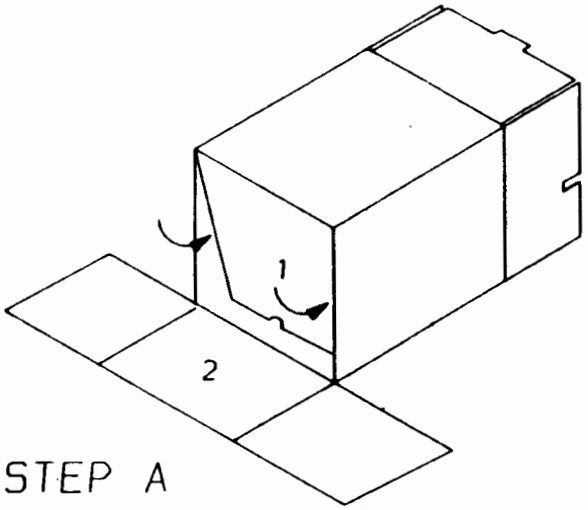

STEP A

SQUARE UP BOX ON ITS SIDE.
FOLD FLAP 1 INSIDE.

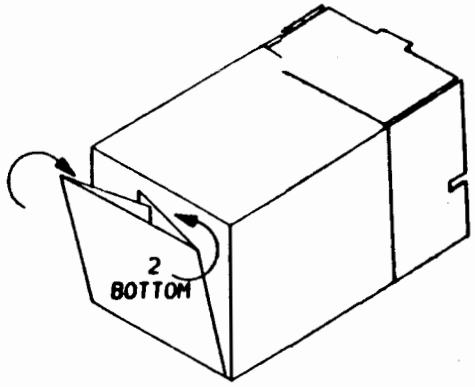

STEP B

FOLD OVER FLAPS ON BOTTOM 2
AND FOLD TO CLOSED POSITION.

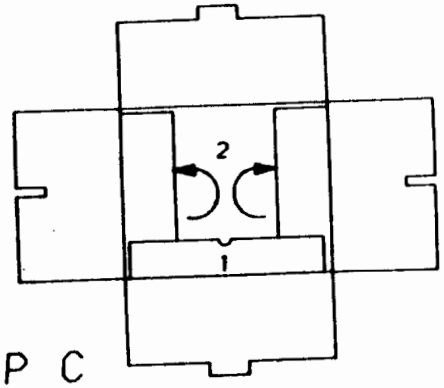

STEP C

LIFT FLAP 1 TO UPRIGHT POSITION
THEN PUSH FLAPS ON BOTTOM 2
AGAINST SIDES OF BOX.

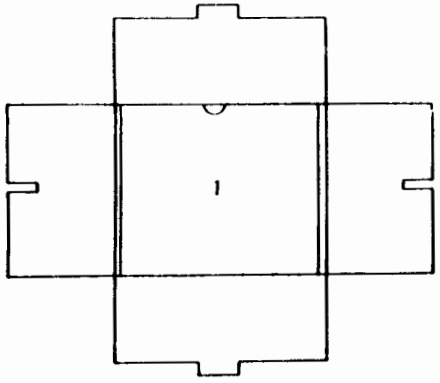

STEP D

PUSH FLAP 1 TO BOTTOM OF BOX.

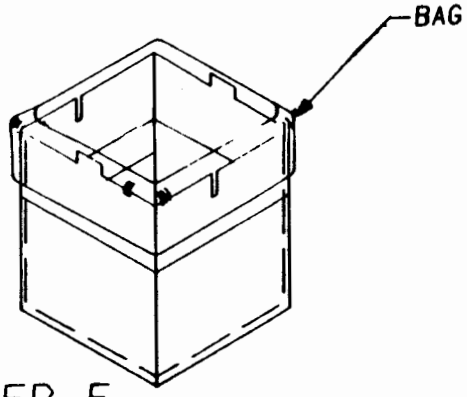

STEP E

STAND BOX WITH FLAPS UP
AND INSERT BAG DRAPING
OVER FLAPS.

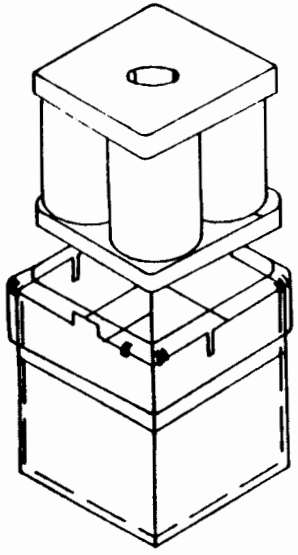

STEP F

INSERT TRAY INTO BOTTOM OF
BOX WITH TRAY SIDES
FOLDED UP.

STEP G

DRAIN FILTERS.
PLACE FILTERS INTO TRAY
AND COVER WITH SECOND
TRAY SIDES FOLDED DOWN.

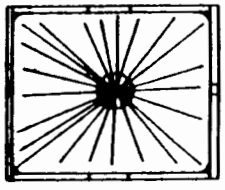

STEP H

LIFT SIDES OF BAG, TWIST
AND INSERT INTO CENTER
HOLE OF TOP TRAY
TO SEAL.

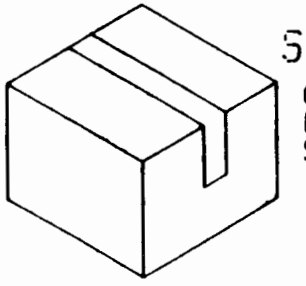

STEP I

CLOSE BOX AND SEAL SEAM
WITH TAPE. OVERLAPPING
SIDE AT LEAST 6 INCHES.

Safety-Kleen Corporation 777 Big Timber Rd. Elgin IL 60120 (312) 887-8460	Product Development		
	BOX, STD. D.C. FILT.		
T. DANOWSKI 3-18-86	C	603	603-001-100-33	-
	NONE	3302	SHEET 3 OF 3

603-001-100-33 3 -

Date	Symbol	Description	Drawn	Checked
4/18/86	--	Released ECO 402	SRT	JPK

BAG -- STANDARD DRY CLEANING FILTER BOX

Configuration: Bags to be made of extruded material with seamless sides. Bottom of bag is to be triple-seamed with heat sealing.

Material: Tri-extruded polyethylene-nylon-polyethylene. 1 3/4 mill polyethylene and 1 mill nylon and 1 3/4 mill polyethylene.

Size: Outside dimensions of the bag shall be 35" wide x 45" long.

Other Required Features: Seaming in the bottom of the bag should be in an area covering the last 1¼" of the bag. There shall be three bar seals in this space covering the entire width of the bag.

Qualified Vendor(s): Vonco Products, Lake Villa, Illinois.

Product Development

Tolerances unless specified are: Two places (xx) ±.020 Three places (xxx) ±.005 Angles (x°) ±1/2°	Material:	Drawn: SRT	Title: Bag, Std DC Filt Bx	
		Checked: JPK		
		Approved: JPK	Scale: Do not scale print	603 — 002 — 100 — 1
		Approved:		

This drawing contains information proprietary to Safety-Kleen Corporation. Any disclosure or reproduction in part or in whole is expressly prohibited except by a written agreement from Safety-Kleen

Sheet 1 of 1 | Revision: | P/N 3303

Date	Symbol	Description	Drawn	Checked
4/18/86	--	Released ECO 402	JPK	DAL

TRAY -- STANDARD DRY CLEANING FILTER BOX

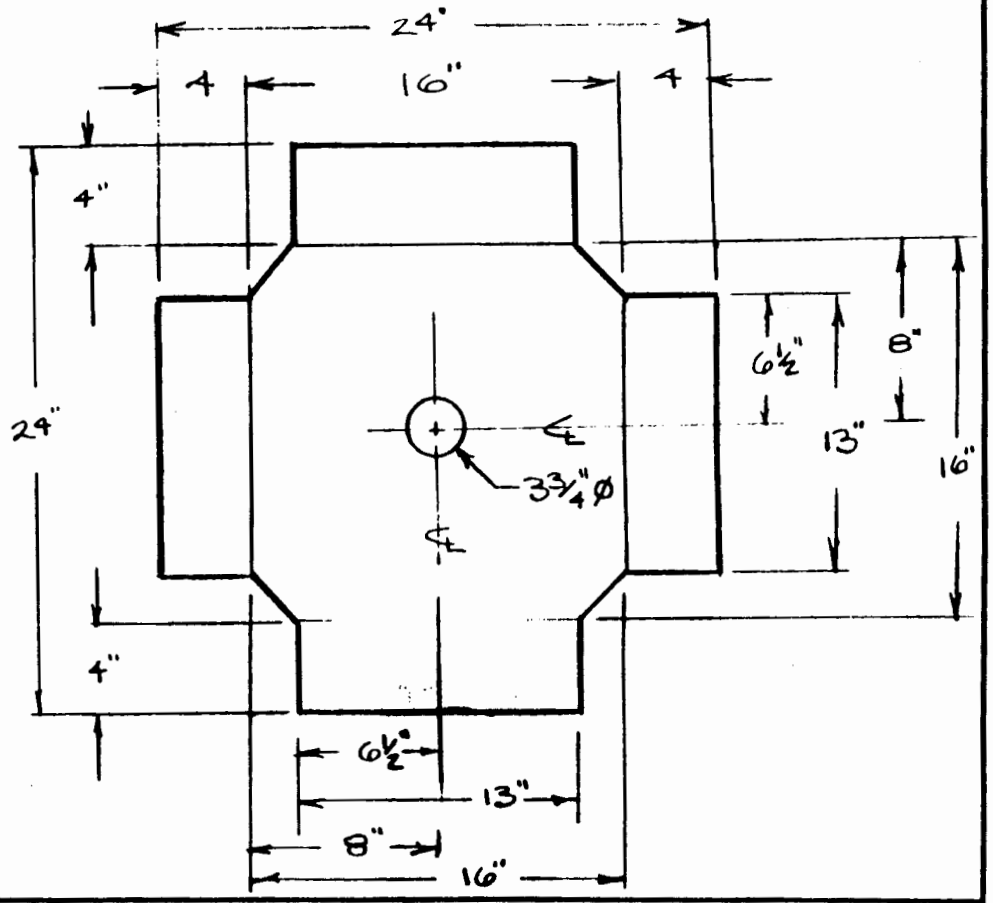

Configuration: A flat scored tray with broken corners when folded into position, with a 3/34" diameter hole in the center of the tray.

Material: 275-pound-test, C-fluted corrugated.

Size: 16" x 16" x 4" deep.

Other Required Features: Corners of the tray shall be broken so as not to tear the poly-nylon-poly bag into which the tray is inserted.

Qualified Vendor(s): Mack Chicago Container Corp., Chicago, Illinois.

Product Development

Tolerances unless specified are: Two places (xx) ±.020 Three places (xxx) ±.005 Angles (x°) ±1/2°	Material: SEE ABOVE	Drawn: [signature] Checked: DHL Approved: [signature] Approved:	Title: Tray, Std DC Filt Bx Scale: Do not scale print	603 — 003 — 100 — 1
This drawing contains information proprietary to Safety-Kleen Corporation. Any disclosure or reproduction in part or in whole is expressly prohibited except by a written agreement from Safety-Kleen.			Sheet 1 of 1	Revision: P/N 3307

Safety-Kleen Corporation, 777 Big Timber Road, Elgin, Illinois 60120

Date	Symbol	Description	Drawn	Checked
4/18/86	--	Released ECO 402	SRT	JPK

TAPE -- STANDARD DRY CLEANER FILTER BOX

Materials: Filament tape

Size: 2" wide x 110 yards long/roll, 2.1 mil. thick.

Qualified Vendor(s): Elgin Paper Co., Elgin, Illinois. (Vendor's product # 701)

Product Development

Tolerances unless specified are: Two places (xx) ±.020 Three places (xxx) ±.005 Angles (x°) ±1/2°	Material:	Drawn: SRT Checked: JPK Approved: JPK Approved:	Title: Tape, Std DC Filt Bx Scale: Do not scale print
			603 — 004 — 100 — 1

This drawing contains information proprietory to Safety-Kleen Corporation.
Any disclosure or reproduction in part or in whole is expressly prohibited except by a written agreement from Safety-Kleen

Sheet 1 of 1 | Revision: | P/N 3305

Safety-Kleen Corporation, 777 Big Timber Road, Elgin, Illinois 60120

Date	Symbol	Description	Drawn	Checked
4/18/86	--	Released ECO 402	SRT	JPK

DISPENSER -- FOR TAPE FOR STANDARD DRY CLEANER BOX

Configuration: 2" tape dispenser

Qualified Vendor(s): Elgin Paper Co., Elgin, Illinois. (Vendor's product # H180)

Product Development

Tolerances unless specified are: Two places (xx) ±.020 Three places (xxx) ±.005 Angles (x°) ±1/2°	Material:	Drawn: SRT Checked: JPK Approved: JPK Approved:	Title: Disp, Filt Bx Tape Scale: Do not scale print 603 – 005 – 100 – 1

This drawing contains information proprietary to Safety-Kleen Corporation
Any disclosure or reproduction in part or in whole is expressly prohibited except by a written agreement from Safety-Kleen

Sheet of | Revision: P/N 3310

Safety-Kleen Corporation, 777 Big Timber Road, Elgin, Illinois 60120

GAYNES TESTING LABORATORIES, INC.
1642–52 West Fulton Street • Chicago, Illinois 60612 • Area Code 312/421-5257
Member: American Council of Independent Laboratories

March 7, 1986

Safety-Kleen Corporation
777 Big Tiber Road
Elgin, Illinois 60120

Attention: Mr. J.P. Kusz
RE: Transporation Tests on Shipping Container
Our Job No. 86211

Dear Mr. Kusz:

This is to verify the results of Drop and Vibration Tests conducted on Shipping Containers used for Metal Filters.

MATERIAL SUBMITTED:

Six (6) corrugated fibreboard shipping containers, with inside top and bottom trays, and "Plastic" bags.

CONTAINER INFORMATION -

All six (6) identical containers were marked from 1 thru 6.

Size (approximately)	- 17 1/2 x 17 x 15 3/4 inches
Style	- Special Designed type of container, with a interlocking & reinforcing type of bottom flaps, and locking top flaps.
Manufacturer's Joint	- Glued
Closures	- Top Flaps Taped
Inner Packing	- Corrugated Fibreboard Material top and bottom trays, and a "Plastic" bag.
Contents	- Four (4) Metal Filters

GAYNES TESTING LABORATORIES, INC.

Container Set-Up:

1. Four (4) Filters drained for 1 hour
2. One (1) assemble container
3. One (1) Plastic Bag placed in the container
4. A bottom tray was placed in the plastic bag
5. The four (4) filters were placed in the bag and in the tray
6. The top tray was placed over the four (4) filters
7. The plastic bag was closed and the twisted end was stuffed in a center hole of the top tray
8. The top flaps of the container were closed and taped with 2" plastic tape.

Test Procedure & Results:

Drop Test -

Using a Gaynes Free Fall Drop Tester, each container was subjected to three (3) drops from a height of 12 inches as follows:
1st. Drop flat on the Bottom, 2nd. Drop on a Bottom edge and 3rd. Drop on a Bottom corner.

Results - All containers ok; no immediate indication of leakage.

All six (6) containers were stored for 48 hours to determine if leaking would develop during that period.

Inspection after 48 hours indicated that containers no. 4 and no. 5 were leaking. This leakage in each package was caused by a small tear in the plastic bag. (See Photo no. 1).

Rotary Motion Vibration -

The four (4) remaining containers were placed in their normal upright shipping positions on the table of a Gaynes Rotary Motion Vibration Tester having a table displacement of 1.0 inch (See Photo no. 2). With the containers side by side and one end against the back stop, the machine was activated and the speed was increased until it was possible to move a 1/16 inch steel shim about 4 inches between the bottom of the container and the table surface. This occurred at a frequency of 220 rpm. After 15 minutes, the machine was stopped and the packages were inspected, and then were rotated 90° for a 2nd. 15 minutes of vibration at 220 rpm.

Results - All containers ok; no indication of leaking.

GAYNES TESTING LABORATORIES, INC.

Vertical Linear Vibration-High Displacement

The four (4) containers were placed in their normal up-right shipping positions on the table of a Gaynes Vertical Linear Vibration Machine having a table displacement of 1.0 inch (See Photo No. 3). The machine was activated and the speed was increased until it was possible to move a 1/16 inch thick steel shim 4 inches between the bottom of the container and the table surface. This occurred at 278 rpm. The containers were vibrated for 30 minutes.

Results - All containers ok; no indication of leaking.

Vertical Linear Vibration - Low Displacement

The containers were moved to a L.A.B. Vibration machine and were positioned in their normal upright positions on the table. The table displacement was set for 0.1 inch. (See Photo no. 4). The machine was activated and the speed was increased until a resonant frequency was reached. This occurred at 840 rpm (14 Hz.) The containers were vibrated for 30 minutes at this speed.

Results - All containers ok; no indication of leaking

Drop Test -

The containers were moved to the Drop Tester and subjected to six (6) additional drops from a height of 12 inches in the following order: (See Photos no. 5,6, & 7).

1st. Drop on a Top Corner, 2nd. Drop on a edge radiating from the dropped corner, 3rd. on a 2nd. edge radiating from the dropped corner, 4th. drop on a end, 5th. on a side, and 6th. on the top.

Results - All containers ok; no indication of leaking

It should be noted that video tape recordings were made of the entire test and the tapes were submitted to Safety-Kleen, Inc.

Should you have any questions regarding the testing conducted, please contact us.

Very truly yours,

GAYNES TESTING LABORATORIES, I

F.T. Wittenrood

F.T. Wittenrood

Appendix F

Emergency Information

EMERGENCY INFORMATION

A. Facility Emergency Coordinator / Alternate Coordinator

	Facility Emergency Coordinator	Alternate Coordinator
Name:	Rick McDonald	Dave Rockwell
Home Address:	201 E. Gladden Farmington, NM 87401	2720 Girard NE Albuquerque, NM 87107
Telephone:	Office: 505/327-9070 Home: 505/326-3075	505/884-2277 505/897-1249

B. Emergency Notification Phone Number

a. Internal :

Safety-Kleen Environmental Affairs Department
24 Hour Emergency Number: 312/888-4660

b. External :

1. National Response Center
   24 Hour Emergency Number: 800/424-8802

2. New Mexico Health and Environment Dept.
   505/827-9329

C. Emergency Team to be Notified

	UNIT	TELEPHONE NUMBER
a.	Farmington Fire Dept.	505/327-0222
b.	Farmington Police Dept.	505/325-3501
c.	San Juan County Regional Medical Center	505/325-5011
d.	Rinchem	505/345-3655

EMPLOYEES' FUNCTIONS DURING AN EMERGENCY

Employee	Title	Emergency Function
Rick McDonald	Branch Manager	Emergency Coordinator Notify Environmental Affairs Department Notify Emergency Agencies, if necessary.
		Retain, contain or slow the flow of solvent
		Shut off electricity

safety-kleen®

Certified Mail-Return Receipt Requested

September 16, 1987

Fire Chief
Farmington Fire Department
303 N. Auburn
Farmington, NM 87401

Subject: Safety-Kleen Corp. (7-008-21)
4200 A Hawkins Road
Farmington, New Mexico 87401

Dear Sir:

Under terms of U.S. EPA Regulations 40 CFR 265, Safety-Kleen Corp. must make arrangements to familiarize local authorities with the layout of the facility, places where facility personnel work, entrances to the facility and possible evacuation routes.

A copy of the Contingency Plan is enclosed for your files. It includes Material Safety Data Sheets for the solvents handled at the subject site: mineral spirits, carburetor cleaner and dry cleaning solvents. These documents describe the properties and associated hazards of the materials at the facility. A facility layout plan is also included to show where facility personnel normally work, entrances to the facility and possible evacuation routes.

If you have any questions or desire to visit our facility, please contact Mr. Rick McDonald at 505/327-9070.

Sincerely,

Paula M Ventura

Paula M. Ventura
Environmental Permit Writer

PMV/dfs

cc: R. McDonald, Br. Mgr. (7-008-21)

777 BIG TIMBER ROAD ELGIN, ILLINOIS 60123 PHONE 312/697-8460 TELEX 910 251 4479

safety-kleen®

Certified Mail-Return Receipt Requested

September 16, 1987

Police Chief
Farmington Police Department
800 Municipal Dr.
Farmington, New Mexico 87401

Subject: Safety-Kleen Corp. (7-008-21)
4200 A Hawkins Road
Farmington, New Mexico 87401

Dear Sir:

Under terms of U.S. EPA Regulations 40 CFR 265, Safety-Kleen Corp. must make arrangements to familiarize local authorities with the layout of the facility, places where facility personnel work, entrances to the facility and possible evacuation routes.

A copy of the Contingency Plan is enclosed for your files. It includes Material Safety Data Sheets for the solvents handled at the subject site: mineral spirits, carburetor cleaner and dry cleaning solvents. These documents describe the properties and associated hazards of the materials at the facility. A facility layout plan is also included to show where facility personnel normally work, entrances to the facility and possible evacuation routes.

If you have any questions or desire to visit our facility, please contact Mr. Rick McDonald at 505/327-9070.

Sincerely,

Paula M. Ventura

Paula M. Ventura
Environmental Permit Writer

PMV:dfs

cc: R. McDonald, Br. Mgr. (7-008-21)

777 BIG TIMBER ROAD ELGIN, ILLINOIS 60123 PHONE 312/697-8460 TELEX 910 251 4479

Certified Mail-Return Receipt Requested

Safety-Kleen®

September 16, 1987

Hospital Administrator
San Juan County Regional Medical Center
801 W. Maple
Farmington, New Mexico 87401

Subject: Safety-Kleen Corp. (7-008-21)
4200 A Hawkins Road
Farmington, New Mexico 87401

Dear Sir or Madam:

Under terms of U.S. EPA Regulations 40 CFR 265, Safety-Kleen Corp. must make arrangements to familiarize local authorities with the layout of the facility, places where facility personnel work, entrances to the facility and possible evacuation routes.

A copy of the Contingency Plan is enclosed for your files. It includes Material Safety Data Sheets for the solvents handled at the subject site: mineral spirits, carburetor cleaner and dry cleaning solvents. These documents describe the properties and associated hazards of the materials at the facility. A facility layout plan is also included to show where facility personnel normally work, entrances to the facility and possible evacuation routes.

If you have any questions or desire to visit our facility, please contact Mr. Rick McDonald at 505/327-9070.

Sincerely,

Paula M. Ventura

Paula M. Ventura
Environmental Permit Writer

PMV:dfs

cc: R. McDonald, Br. Mgr. (7-008-21)

777 BIG TIMBER ROAD ELGIN, ILLINOIS 60123 PHONE 312/697-8460 TELEX 910 251 4479

safety-kleen corp.

Corporate Policy

Policy #: 600-608

Date: 7/2/81

Dept.: Technical Service

Corporate Approval

Policy Title: O.S.H.A. OCCUPATIONAL SAFETY AND HEALTH ADMINISTRATION

I. OBJECTIVE

This section is prepared to protect our workers and to comply with the Occupational Safety and Health Administration requirements that the employees have available, a chemical description, and a Material Safety Data Sheet (OSHA Form 20) for the solvents they are handling. The information on these sheets is also necessary in the case of a spill or a disaster/fire and is referred to in Section 600-609 and 600-610.

II. SYSTEM

The two solvents in the Safety-Kleen regeneration loop (see the diagram) are 105 parts cleaner, and the proprietary blend 609 solvent for the immersion cleaners.

Being neat is most important! Slovenly use of either solvent can cause injury to the worker.

As additional solvents and chemicals are added at specific centers, Product Bulletins and Material Safety Data Sheets will be available from the Technical Service Department and must be added.

III. INSPECTION

A. GLOVES - The rubber or plastisol gloves sold by Safety-Kleen are good and should be worn when handling the solvents.

B. GLASSES OR FACE MASK - Whichever the worker prefers should be worn when loading or unloading the solvent.

C. PLASTIC APRONS - Should be available for the situations where a major cleanup will be getting solvent on the worker's clothing.

D. EYE WASH STAND - Normally the eye wash stand is located centrally at the Center. At the larger Centers, several stands are provided. The workers should try the stand and be familiar with its operation.

E. SHOWERS - Should be checked periodically to ascertain that they are operational.

F. VENTILATION - Any area that is closed and collects vapors should be avoided or equipped with proper fans to insure adequate ventilation

MATERIAL SAFETY DATA SHEET

SAFETY-KLEEN CORP.
777 Big Timber Rd.
Elgin, IL 60120

safety-kleen corp.

IDENTITY (As Used on Label and List)	Note: Blank spaces are not permitted. If any item is not applicable, or no information is available, the space must be marked to indicate that.
Safety-Kleen 105 Solvent-MS	

Section I Part #6617

Manufacturer's Name Safety-Kleen Corp.	Emergency Telephone Number 312/697-8460
Address (Number, Street, City, State, and ZIP Code) 777 Big Timber Road	Telephone Number for Information 312/697-8460
Elgin, Illinois 60120	Date Prepared 11/6/85
	Signature of Preparer (optional)

Section II — Hazardous Ingredients/Identity Information

Hazardous Components (Specific Chemical Identity; Common Name(s))	OSHA PEL	ACGIH TLV	Other Limits Recommended	% (optional)
Mineral Spirits	500 ppm	100 ppm	-	99.9+
Dye	Unk.	Unk.	-	0.003
Anti-Static Agent	Unk.	Unk.	100 est.	1 ppm

Section III — Physical/Chemical Characteristics

Boiling Point	310-400°F	Specific Gravity (H_2O = 1)	0.775-0.795
Vapor Pressure (mm Hg.) @ 68°F	2	Melting Point	N/A
Vapor Density (AIR = 1)	4.9	Evaporation Rate (Toluene = 1)	0.2

Solubility in Water
Negligible.

Appearance and Odor
Clear green liquid with characteristic hydrocarbon odor.

Section IV — Fire and Explosion Hazard Data

Flash Point (Method Used) 105°F TCC	Flammable Limits	LEL 0.7	UEL 6.0

Extinguishing Media
CO_2, foam, dry chemical, water (mist only)

Special Fire Fighting Procedures
None.

Unusual Fire and Explosion Hazards
None.

Section V — Reactivity Data

Stability	Unstable		Conditions to Avoid
	Stable	X	Heat, sparks, flame and fire.

Incompatability (Materials to Avoid)
Strong oxidizing agents.

Hazardous Decomposition or Byproducts
Normally none; however, incomplete burning may yield carbon monoxide.

Hazardous Polymerization	May Occur		Conditions to Avoid
	Will Not Occur	X	

Section VI — Health Hazard Data

Route(s) of Entry:	Inhalation?	Skin?	Ingestion?
	yes	no	yes

Health Hazards (Acute and Chronic)
Skin - can cause drying of skin. Eyes - severe irritant. Inhalation - excessive inhalation can cause headache, dizziness and nausea. Ingestion - harmful or fatal if swallowed.

Carcinogenicity:	NTP?	IARC Monographs?	OSHA Regulated?

Not a known or potential carcinogen.

Signs and Symptoms of Exposure
Drying of skin, eye irritation, headache, dizziness, nausea.

Medical Conditions Generally Aggravated by Exposure
Unknown.

Emergency and First Aid Procedures
Skin - Wash with soap and water. Eyes - Irrigate with water. Inhalation - Remove to fresh air source and call a physician. Ingestion - DO NOT induce vomiting. Call a physician.

Section VII — Precautions for Safe Handling and Use

Steps to Be Taken in Case Material is Released or Spilled
Catch and collect for recovery as soon as possible. Avoid exposure to sparks, fire, flame, hot surfaces.

Waste Disposal Method
Dispose of in accordance with company, local, state and federal regulations.

Precautions to Be Taken in Handling and Storing
Combustible. Keep away from heat, sparks, flame. Use with adequate ventilation. Avoid long and repeated contact with skin. If clothes are inadvertently saturated with solvent-

Other Precautions
DO NOT SMOKE- keep away from ignition sources. Keep out of reach of children.

Section VIII — Control Measures

Respiratory Protection (Specify Type)
Self-contained breathing apparatus for concentrations above TLV limits.

Ventilation	Local Exhaust	Special
	Normal room ventilation.	None.
	Mechanical (General)	Other
	None.	None.

Protective Gloves	Eye Protection
In cases of prolonged contact, wear rubber gloves.	Yes - eyeglasses, safety glasses.

Other Protective Clothing or Equipment
N/A

Work/Hygienic Practices
Do not smoke while using this solvent.

MATERIAL SAFETY DATA SHEET

SAFETY-KLEEN CORP.
777 Big Timber Rd.
Elgin, IL 60120

safety-kleen corp.

IDENTITY (As Used on Label and List) Immersion Cleaner and Carburetor and Cold Parts Cleaner 609	Note: Blank spaces are not permitted. If any item is not applicable, or no information is available, the space must be marked to indicate that.

Section I Part #6631

Manufacturer's Name Safety-Kleen Corp.	Emergency Telephone Number 312/697-8460
Address (Number, Street, City, State, and ZIP Code) 777 Big Timber Road	Telephone Number for Information 312/697-8460
Elgin, Illinois 60120	Date Prepared 11/6/85
	Signature of Preparer (optional)

Section II — Hazardous Ingredients/Identity Information

Hazardous Components (Specific Chemical Identity; Common Name(s))	OSHA PEL	ACGIH TLV	Other Limits Recommended	% (optional)
Cresylic Acids	5 ppm	5 ppm (skin)		11.9
Petroleum Sulfonate	Unk.	Unk.		7.4
Methylene Chloride	500 ppm	100 ppm	-	31.7
Ortho-di-chlorobenzene	50 ppm	50 ppm	-	31.3
Complex Amines	Unk.	Unk.	-	0.4
Triethanolamine	-	-	-	0.4
Water	-	-	-	16.8

Section III — Physical/Chemical Characteristics

Boiling Point	102-395°F	Specific Gravity (H_2O = 1)	1.19
Vapor Pressure (mm Hg.)	~ water	Melting Point	N/A
Vapor Density (AIR = 1)	~ water	Evaporation Rate (water = 1)	~ water

Solubility in Water
Completely miscible in all proportions.

Appearance and Odor
Clear, dark amber liquid-aromatic odor. Two distinct layers comprise the product.

Section IV — Fire and Explosion Hazard Data

Flash Point (Method Used) Non-flammable	Flammable Limits N/A	LEL -	UEL -

Extinguishing Media
N/A

Special Fire Fighting Procedures
Although product is non-flammable, flames, welding arcs or other high temperature sources can cause decomposition. This decomposition can yield corrosive and toxic fumes.

Unusual Fire and Explosion Hazards

Section V — Reactivity Data

Stability			Conditions to Avoid
	Unstable		Avoid smoke from any combustion product.
	Stable	X	

Incompatibility (Materials to Avoid)
Strong oxidizing agents.

Hazardous Decomposition or Byproducts
Normally none; however, flames and welding arcs can produce corrosive and toxic fumes.

Hazardous Polymerization			Conditions to Avoid
	May Occur		
	Will Not Occur	X	

Section VI — Health Hazard Data

Route(s) of Entry:	Inhalation?	Skin?	Ingestion?
	yes	yes	yes

Health Hazards (Acute and Chronic)
This material is corrosive to living tissue. Excessive inhalation can cause headache, dizziness and nausea.

Carcinogenicity:	NTP?	IARC Monographs?	OSHA Regulated?
	no	no	no

Methylene chloride has been found to cause tumors in laboratory test animals.

Signs and Symptoms of Exposure
Burning of eyes and skin, headache, nausea.

Medical Conditions Generally Aggravated by Exposure Unknown.

Emergency and First Aid Procedures Eyes - Irrigate with water. Skin - Wash with soap and water and/or baking soda water. Inhalation - Remove to fresh air source. If ingested, administer plain water. DO NOT INDUCE VOMITING. Call a physician.

Section VII — Precautions for Safe Handling and Use

Steps to Be Taken in Case Material is Released or Spilled
Absorb spill with sawdust or oil absorbent or soda ash. Catch and collect for recovery as soon as possible. Further flushing and cleaning with a weak alkaline solution (soda ash, baking soda, caustic soda) will aid in neutralizing cresylic acid from the spill.

Waste Disposal Method
Dispose of in accordance with company, local, state and federal regulations.

Precautions to Be Taken in Handling and Storing
Keep away from heat, sparks and open flame. Use adequate ventilation. Avoid contact with skin and eyes.

Other Precautions If cleaner contacts clothing, change clothes or wash off excess immediately to avoid possible skin irritation. Although product is non-flammable, open flames, welding arcs or other high temperature sources can cause product decomposition. This decomposition can yield corrosive and toxic fumes.

Section VIII — Control Measures

Respiratory Protection (Specify Type)
Self-contained breathing apparatus for concentrations above TLV limits.

Ventilation		
	Local Exhaust: Yes	Special: None.
	Mechanical (General): None.	Other: None.

Protective Gloves	Eye Protection
Rubber gloves.	Chemical face shield; goggles.

Other Protective Clothing or Equipment
Rubber apron to protect skin and clothing.

Work/Hygienic Practices
Do not smoke around this product.

MATERIAL SAFETY DATA SHEET

SAFETY-KLEEN CORP.
777 Big Timber Rd.
Elgin, IL 60120

safety-kleen corp.

IDENTITY (As Used on Label and List)	Note: Blank spaces are not permitted. If any item is not applicable, or no information is available, the space must be marked to indicate that.
Safety-Kleen Perchloroethylene	

Section I Dry Cleaning Grade Part #778

Manufacturer's Name Safety-Kleen Corp.	Emergency Telephone Number 312/697-8460
Address (Number, Street, City, State, and ZIP Code) 777 Big Timber Road	Telephone Number for Information 312/697-8460
Elgin, Illinois 60120	Date Prepared 11/25/85
	Signature of Preparer (optional)

Section II — Hazardous Ingredients/Identity Information

Hazardous Components (Specific Chemical Identity; Common Name(s))	OSHA PEL	ACGIH TLV	Other Limits Recommended	% (optional)
Perchloroethylene	100 ppm	50 ppm		

Section III — Physical/Chemical Characteristics

Boiling Point	250°F.	Specific Gravity (H_2O = 1)	1.6
Vapor Pressure (mm Hg.) @ 20°C.	13	Melting Point	N/A
Vapor Density (AIR = 1)	5.8	Evaporation Rate (toluene = 1)	0.09

Solubility in Water
Negligible.

Appearance and Odor
Colorless, clear liquid, mildly sweet.

Section IV — Fire and Explosion Hazard Data

Flash Point (Method Used) None (tag closed cup)	Flammable Limits N/A	LEL N/A	UEL N/A

Extinguishing Media
N/A

Special Fire Fighting Procedures
Self-contained breathing equipment should be used by firemen in building where perchloroethylene is stored. Keep container cool.

Unusual Fire and Explosion Hazards
Vapors can be ignited by high energy ignition source. Decomposes with fire or hot surfaces to acidic gases and other highly toxic substance.

Section V — Reactivity Data

Stability			Conditions to Avoid
	Unstable		Contact with open flame, hot surfaces or emissions from
	Stable	X	welding arc.

Incompatability (Materials to Avoid)

Hazardous Decomposition or Byproducts
Hydrogen chloride, phosgene and other highly toxic substance.

Hazardous Polymerization			Conditions to Avoid
	May Occur		
	Will Not Occur	X	

Section VI — Health Hazard Data

Route(s) of Entry:	Inhalation?	Skin?	Ingestion?
	yes	yes	yes

Health Hazards (Acute and Chronic)
Overexposure can cause vomiting, nausea, drowsiness, unconsciousness and even death in extreme cases.

Carcinogenicity:	NTP?	IARC Monographs?	OSHA Regulated?
	no	no	no

Signs and Symptoms of Exposure
Vomiting, drowsiness, nausea.

Medical Conditions
Generally Aggravated by Exposure Unknown.

Emergency and First Aid Procedures Move to fresh air. Remove contaminated clothing. If breathing has stopped, administer artificial respiration. Keep warm and quiet. Call a physician.

Eye contact - Wash with copious amounts of water. Never administer adrenaline.

Section VII — Precautions for Safe Handling and Use

Steps to Be Taken in Case Material is Released or Spilled
Evacuate the area, ventilate, avoid breathing vapor or coming in contact with liquid.

Clean up area (wear protective clothing), contain spill, transfer by mopping or with absorbent material to storage container.

Waste Disposal Method
Dispose of in accordance with company, local, state and federal regulations.

Precautions to Be Taken in Handling and Storing
Avoid contact with skin and avoid vapors. Pipe vents outdoors. Store in cool, dry, ventilated area.

Other Precautions
Prevent moist air from entering storage. No smoking in presence of vapors.

Section VIII — Control Measures

Respiratory Protection (Specify Type)
None required when used with adequate ventilation.

Ventilation	Local Exhaust	Special
	Sufficient to maintain below TLV.	N/A
	Mechanical (General)	Other
	N/A	N/A

Protective Gloves	Eye Protection
Neoprene, viton, PVC coated.	Chemical safety goggles.

Other Protective Clothing or Equipment
Protective headgear and apron when splashing is a problem.

Work/Hygienic Practices
Do not smoke when using this product.

MATERIAL SAFETY DATA SHEET

SAFETY-KLEEN CORP.
777 Big Timber Rd.
Elgin, IL 60120

safety-kleen corp.

IDENTITY (As Used on Label and List)	Note: Blank spaces are not permitted. If any item is not applicable, or no information is available, the space must be marked to indicate that.
Safety-Kleen Lacquer Thinner	

Section I Part #6782

Manufacturer's Name Safety-Kleen Corp.	Emergency Telephone Number 312/697-8460
Address (Number, Street, City, State, and ZIP Code) 777 Big Timber Road	Telephone Number for Information 312/697-8460
Elgin, Illinois 60120	Date Prepared 12/13/85
	Signature of Preparer (optional)

Section II — Hazardous Ingredients/Identity Information

Hazardous Components (Specific Chemical Identity; Common Name(s))	OSHA PEL	ACGIH TLV	Other Limits Recommended	% (optional)
Toluene	200 ppm	100 ppm	-	-
Xylene	100 ppm	100 ppm	-	
Methyl Ethyl Ketone	200 ppm	200 ppm	-	
Methyl Iso Butyl Ketone	100 ppm	50 ppm	-	
Acetone	1000 ppm	750 ppm	-	
Isopropanol	400 ppm	400 ppm	-	
Methanol	200 ppm	200 ppm	-	
Ethanol	1000 ppm	1000 ppm	-	
Normal Butyl Acetate	150 ppm	150 ppm	-	
Iso Butyl Acetate	200 ppm	200 ppm	-	

Section III — Physical/Chemical Characteristics

Boiling Point	131-347°F.	Specific Gravity (H_2O = 1)	~0.840
Vapor Pressure (mm Hg.) @ 68°F.	185	Melting Point	N/A
Vapor Density (AIR = 1)	2.0	Evaporation Rate (Ether = 1)	slower than ether

Solubility in Water
Appreciable.

Appearance and Odor
Clear colorless liquid with characteristic solvent odor.

Section IV — Fire and Explosion Hazard Data

Flash Point (Method Used)	Flammable Limits	LEL	UEL
<20°F. TCC		1.1	12.8

Extinguishing Media
CO_2, foam, dry chemical, water (mist only)

Special Fire Fighting Procedures
Liquid water may be used to cool containers and firefighters. However, due to differences in specific gravity, water could cause the free solvent to spread and a fire to spread.

Unusual Fire and Explosion Hazards
Extremely flammable.

Section V — Reactivity Data

Stability			Conditions to Avoid
	Unstable		
	Stable	X	Heat, sparks, flame and fire.

Incompatability (Materials to Avoid)
Strong oxidizing agents.

Hazardous Decomposition or Byproducts
Normally none; however, incomplete burning may yield carbon monoxide.

Hazardous Polymerization			Conditions to Avoid
	May Occur		
	Will Not Occur	X	

Section VI — Health Hazard Data

Route(s) of Entry:	Inhalation?	Skin?	Ingestion?
	yes	yes	yes

Health Hazards (Acute and Chronic)
Skin - Can cause drying of skin. Eyes - Severe irritant. Inhalation - Excessive inhalation can cause headache, dizziness and nausea. Ingestion - Harmful or fatal if swallowed.

Carcinogenicity:	NTP?	IARC Monographs?	OSHA Regulated?
	no	no	no

None of the ingredients are known or suspected carcinogens.

Signs and Symptoms of Exposure
Drying of skin, eye irritation, headache, dizziness, and nausea.

Medical Conditions Generally Aggravated by Exposure
Unknown.

Emergency and First Aid Procedures
Skin - Wash with soap and water. Eyes - Irrigate with water. Inhalation - Remove to fresh air source and call a physician. Ingestion - DO NOT INDUCE VOMITING. Call a physician.

Section VII — Precautions for Safe Handling and Use

Steps to Be Taken in Case Material is Released or Spilled
Catch and collect for recovery as soon as possible. Avoid exposure to sparks, fire, flame, hot surfaces.

Waste Disposal Method
Dispose of in accordance with company, local, state and federal regulations.

Precautions to Be Taken in Handling and Storing
Extremely flammable. Keep away from heat, sparks, flame. Use with adequate ventilation. Avoid long and repeated contact with skin. If clothes are inadvertently saturated with solvent - DO NOT SMOKE - Keep away from ignition sources. Keep out of reach of children.

Other Precautions

Section VIII — Control Measures

Respiratory Protection (Specify Type)
Respirator as recommended by NIOSH for concentrations above TLV limits.

Ventilation		
	Local Exhaust: Sufficient to keep concentration below lowest TLV.	Special: None.
	Mechanical (General): None.	Other: None.

Protective Gloves	Eye Protection
In cases of prolonged contact, wear rubber gloves.	Yes - eyeglasses, safety glasses.

Other Protective Clothing or Equipment
N/A

Work/Hygienic Practices
Do not smoke while using this solvent. Wash hands thoroughly after use and before eating.

safety-kleen corp.

Corporate Policy

Policy #: 600-609

Date: 7/2/81

Dept.: Technical Service

Corporate Approval

Policy Title: SPILL PREVENTION, NOTIFICATION AND CLEANUP PLAN

I. OBJECTIVE

The purpose of this policy is to familiarize the operating personnel of Safety-Kleen Corp. with the essence of Federal and State laws that apply to our operation and to outline the company response and approach to these laws.

A. Discharge of Solvents Prohibited

The first thing a spilled solvent comes in contact with is the soil around the pad at the center. It is a violation at this point and must be recovered. The solvent will seep through the soil until it reaches the ground water system surrounding the center. The speed at which a spill spreads increases as it gets into the ground water, and it is more difficult to recover.

B. Quantities of Solvent

The quantity of solvent that constitutes a reportable spill varies with the hazard classification of the material and the state where it occurs. Generally the operator should think of the material as being spilled when he cannot contain it on the pad of concrete or asphalt.

C. Cleanup

The sooner the cleanup beings, the lower will be the final cost. The guide lines established by law assist the discharger who voluntarily proceeds with the proper containment, removal, treatment and disposal of the discharged material.

D. Statutory Requirements

This policy incorporates the Spill Prevention Control and Countermeasure Plans (SPCC Plan) that are required for all of the Safety-Kleen Centers under penalty of heavy fines.

E. Reporting

Any person in charge of a facility must notify the Environmental Section the Safety-Kleen Elgin office as soon as he has knowledge of a spill so that the spills may be reported to the National Response Center. This Center is manned by the Coast Guard and the duty officer will relay the information to local authorities. The reporting obligation is satisfied by reporting to the National

SPILL PREVENTION, NOTIFICATION, AND CLEANUP (continued)

E. Reporting (continued)

Response Center. The law is specific on this point and any person who fails to notify immediately is subject upon conviction to a fine and/or imprisonment.

II. SAFETY-KLEEN PROGRAM

The development of a sound program for spill prevention and control is not only a legal obligation of the company but a projection of the very image of our corporate name. Each employee must be aware of his responsibilities to the company and to understand that he is instrumental to the success of this program.

A. Planning

Preparedness is a state of awareness of potential spill causes combined with the capability to effectively respond to spills when they occur to prevent them from becoming violations. Preparedness is preventive in nature and from this viewpoint is regarded as most effective. "An ounce of prevention is worth a pound of cure."

B. Prevention

The emphasis must be on PREVENTION, first and foremost.

Obviously if solvent is never spilled, we never have a problem with a violation. S-K facilities, trucks and handling devices are designed to reduce the chance of spills. Personnel training in the correct usage of equipment and procedures should be of a continuing nature.

A spill on the pad is not a violation until the solvent reaches the soil around the pad. Prevention also includes retaining spilled solvent and collecting it for disposal or recycling.

Examples:

1. If the drain fitting on a dirty solvent tank freezes and breaks, letting all the solvent run out, it is not a violation of the FWPC Act if the solvent is retained by a dike.

2. If a service representative tips a drum of solvent at a customer's shop, it is most probably a violation to flush it down the floor drain. The effects can be greatly reduced by containing the spill with absorbent pads for later disposal. absorbent pads and cleanup tools should be carried on all service vans.

SPILL PREVENTION, NOTIFICATION AND CLEANUP (continued)

C. EMERGENCY PROCEDURES

If a spill occurs, contain the solvent to prevent it from becoming a harmful discharge to waters or soil--a violation.

If a harmful discharge does happen:

1. Stop the flow of solvent if possible.

2. Retain, contain or slow the flow of the solvent as much as possible.

3. If immediate recovery of the spilled solvent will reduce the quantity reaching waters or ground, then start recovery operation.

4. Report incident to Safety-Kleen Environmental, Technical Service on the 24-hour telephone: (312) 888-4660.

5. It is the responsibility of the Technical Service Group to respond to the National Response Center within one hour.

6. The State Response Team is required by some states. They also will be contacted by the Technical Service Group.

When a person reports a spill he should be prepared to give his name, position, company name, address, and telephone number. Also, a location of the spill by mileage and direction from a city, town or other well known permanent structure or facility. The person reporting should also give the nature of the material spilled (i.e. Kerosene) and if possible, some estimate of the amount, whether it is near a stream or could enter a stream by flowing through ditches or storm sewers. When reporting a spill, record the date and the time of the call and the name of the person taking the call at the above number.

Spill prevention plans must be reviewed with the Service Center personnel every year and records of the training kept at the Center.*

*See Page 1 of 3 on Policy #600-610

SPILL PREVENTION, NOTIFICATION AND CLEANUP (continued)

III. INSPECTION

1. Valves - should be inspected for proper seat. Stem leaks from worn glands and warped valve bodies, should be repaired or replaced.

2. Pumps - should be inspected for packing leaks and cool, quiet operation.

3. Tanks - should be inspected for corrosion leaks, minimum 5% head space, and excess bottom water drawn off.

4. Hose and Unloading Pipe - should be drained and stored so that all of the solvent is caught and returned to storage.

5. Signs - Display at each entrance and on perimeter fence "DANGER - Unauthorized Personnel Keep Out." (Use foreign languages if applicable).

6. Transport Drivers - will be instructed by the Transportation Manager in handling the trucks unloading line and valves without spills, which will coordinate with the Service Center's effort to avoid all spills.

7. Tank Out Flow Valve - must be locked.

IV. SPILL PROCEDURE

A. Interior Diked Area for Drums

The interior diked area has enough containment for a drum of solvent to be spilled without an overflow. In the event of a spill, the doors and windows should be opened to improve the ventilation in the confined area. Then following the instructions of the Material Safety Data Sheet, the worker would enter the area wearing rubber gloves, aprons, glasses or a face shield and mop up the liquid and return it to dirty storage.

If the vapors are heavy, the worker should come out after 15 minutes for a break.

The clean up is completed only when the workers have cleaned themselves, washing with soap and water.

B. Spills in the Secondary Containment Area Around the Bulk Storage Tank

The dikes are equipped with automatic closing valves and rain water must be kept drained. In this way if a spill occurs, the material will be collected and can be returned to dirty storage. The recovery should start immediately to prevent the solvent from soaking into the ground. Any soil that remains saturated after the solvent has been pumped off must be removed and treated as hazardous waste.

SPILL PREVENTION, NOTIFICATION AND CLEANUP (continued)

C. Spills Outside the Diked Areas

The plan and plat map of each Service Center when it is sent to the Branch Manager should be marked with arrows to show the direction of flow from the plant and possible containment areas. A copy of that map should be kept with this policy.

The absorbent pads and other equipment used in cleaning up the spill should be replenished.

Every spill must be recorded on the attached form with a contingency plan to prevent similar spills in the future. A copy of this report is sent to the Environment section of Technical Service so they can respond at any hearings that may come from the incident.

D. Hazardous Material Storage

The storage area for hazardous material must be diked in concrete with a catchment capable of holding a minimum of 110 gallons.

SPILL HISTORY

(Complete this form for any reportable spill(s) which has occurred from this facility.)

1. Date_____ Volume_____ Cause:_____

Corrective action taken:_____

Plans for preventing recurrence:_____

2. Date_____ Volume_____ Cause:_____

Corrective action taken:_____

Plans for preventing recurrence:_____

3. Date_____ Volume_____ Cause:_____

Corrective action taken:_____

Plans for preventing recurrence:_____

Name of facility_____

Operator_____

safety-kleen corp.

Corporate Policy

Policy #: 600-610

Date: 7-2-81

Dept.: Technical Service

Corporate Approval

Policy Title: DISASTER AND FIRE PLAN

I. OBJECTIVE

The objective of this plan is to prepare the Centers for a disaster by having the proper equipment and procedures in place to prevent injuries and property losses. The plan is designed to keep our workers thinking in terms of prevention rather than reaction.

If a fire or disaster occurs, the prearranged procedures will eliminate much of the confusion. The workers at the Centers must be instructed in their responsibilities and retrained on an annual basis. This training in prevention is important and for inspection the employer is required to keep records.

II. DISASTER AND FIRE BRIEFING

List the workers as they receive this instruction or refresher training.

	Center Personnel	Date	Job Function
1.			
2.			
3.			
4.			
5.			
6.			
7.			
8.			
9.			
10.			

PERSN5L1

III. INSPECTION

A. Leaks

Leaks should be eliminated immediately whenever they occur, by repair or replacing the equipment. Keeping all the solvents contained will eliminate the source of a fire.

B. Trucks

Trucks should be grounded before they are loaded or unloaded.

C. Fire Extinguishers

Each center should have a minimum of two 10-pound ABC extinguishers, located at the points where solvents are transferred. An ABC extinguisher is a universal system effective on paper, wood and electrical, as well as on solvent. The extinguishers must be full and carry an inspection tag. The accepted extinguisher is available as S-K part No. 4009.

D. Fire Plackards

The proper NFPA diamond should be in place on the storage tanks.

Immersion Cleaner Chlorinated	2	0	1	S-K Part No. 2422
Mineral Spirits or 140 Solvent	0	2	0	S-K Part No. 1270

E. "No Smoking" Signs

"No Smoking" signs should be posted in non-smoking areas.

F. Aisles

Aisles must be available through the Center to permit a fireman to pass with firefighting equipment.

G. List of Support Contacts (Attached)

The attached list of support contacts must be filled out with the Hospital, Fire and Police Departments telephone numbers.

H. Material Safety Data Sheets

Material Safety Data Sheets for all the material handled at the Center must be in place under S-K OSHA policy and with the local Fire Department.

IV. FIRE PROCEDURE

(1) STOP THE FLOW.

(2) ACT QUICKLY WITH THE FIRE EXTINGUISHER TO PUT OUT THE FIRE BEFORE IT SPREADS.

(3) CALL FOR THE FIRE DEPARTMENT.

Chlorinated solvents are initially not flammable, but produce toxic gasses and Hydrochloric Acid at elevated temperatures, which would require contained breathing equipment.

Vapors of mineral spirits exposed to a spark or open flame can flash at temperatures over 105°F. A mineral spirits fire can best be extinguished with foam. If foam is not available, sweeping the fire with water can cool it. Directing the water to push the flames into a confined area is possible. The flame should not be extinguished until the flow of the solvent has been stopped. In case of any fire, the flow of solvent should be stopped first. Then attention should be directed immediately to extinguishing the flame.

V. EMERGENCY INFORMATION

OWNER: SAFETY-KLEEN CORP.
655 Big Timber Road
Elgin, Illinois 60120
Tel. (312) 697-8460

_____ LOCAL FIRE DEPT: _____ (phone number)

_____ LOCAL POLICE: _____

_____ STATE POLICE: _____

_____ (Hospital) _____ (phone number)

Branch # _____

Branch Manager _____

Home Address _____

Telephone _____

NOTE: All centers please send a copy of this completed page to Technical Service, Elgin.

1. Facility: _____

SAFETY-KLEEN CORP.

SPILL REPORT TELEPHONE LOG

2. Date of Spill _____ Time _____ a.m. or p.m.
3. Report From: Name _____ Title _____
4. Location of Spill _____

5. Material Spilled _____ Quantity _____ gallons
6. Any injuries or property damage? Y or N If yes, explain (and file OSHA log):

7. CAUSE Of Spill (Check all that apply)

A. Handling/Transport
1. ___load not secured
2. ___back door open
3. ___hand truck/tailgate
4. ___vehicle accident
5. ___pallet/forklift

B. Transfer Operations
1. ___equipment leak (hose, pump, valve,...)
2. ___transfer hose drainage
3. ___tank overfill _____

C. Miscellaneous
1. ___drum leak
2. ___containment vessel fail
3. ___describe _____

7A. Describe scene in detail _____

8. CONTAINMENT Of Spill (check all that apply)

a. ____ contained completely on pavement
b. ____ contained in secondary containment vessel
c. ____ escaped secondary containment structure
d. ____ entered soil
e. ____ entered sewer
f. ____ entered ditch, stream, etc.
g. ____ other, describe _____

9. CLEAN-UP action taken (check all that apply) — Quantity Recovered

a. ____ absorbent material applied _____
b. ____ solvent pumped from secondary containment or sewer _____
c. ____ solvent and absorbents drummed and removed _____
d. ____ soil excavated and drummed _____
e. ____ material returned to same drum or tank _____

Comments _____

Clean-up Contractor (if used) Company Name _____
Contact Person _____

10. NOTIFICATION

	S-K Environmental Dept.	Nat'l Response Center 1-800-424-8802	State
Date/Time :			
Contact Name :			
Comments Rec'd :			

Employee involved in incident _____
Emergency response agencies present (fire, police, etc.) _____

Signature of person preparing report _____ date _____

Appendix G

Training Information

ORGANIZATION CHART

Safety-Kleen Corp.

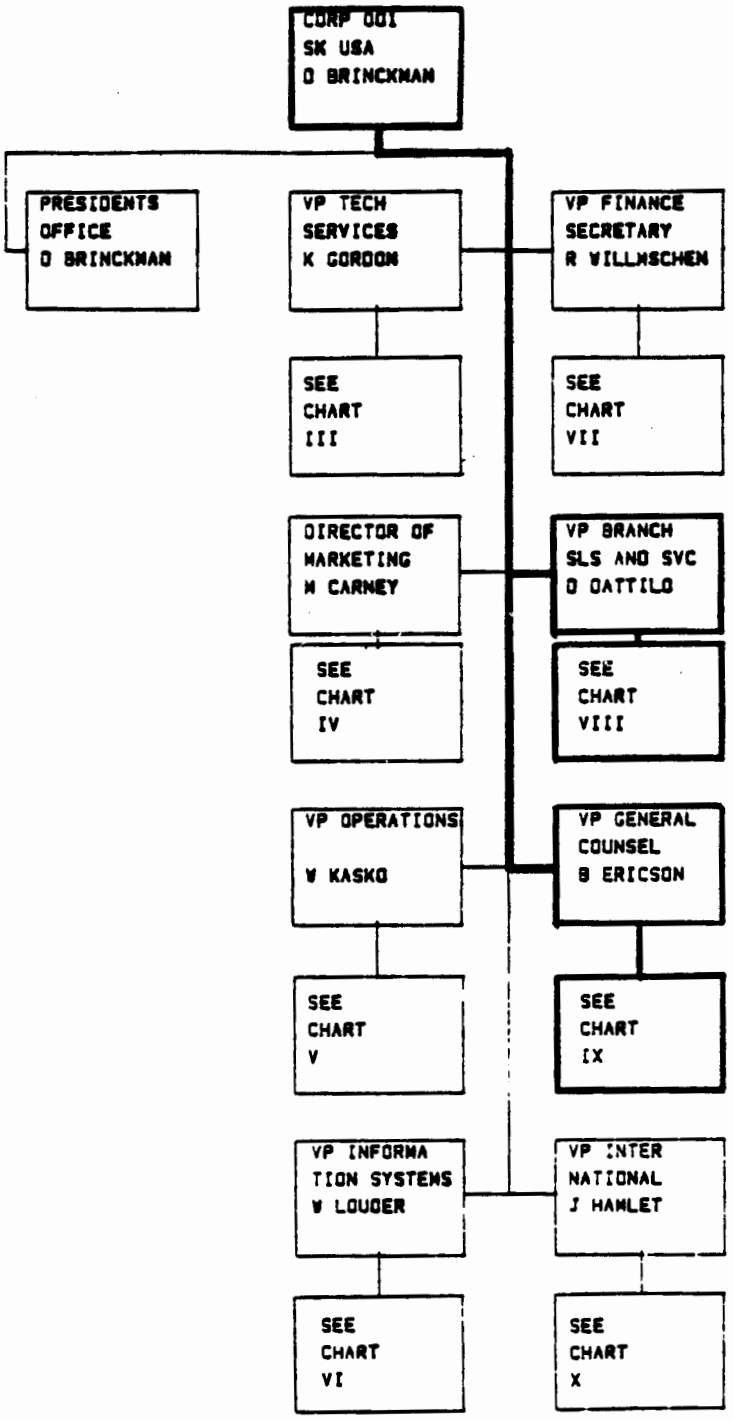

ORGANIZATION CHART

Safety-Kleen Corp.

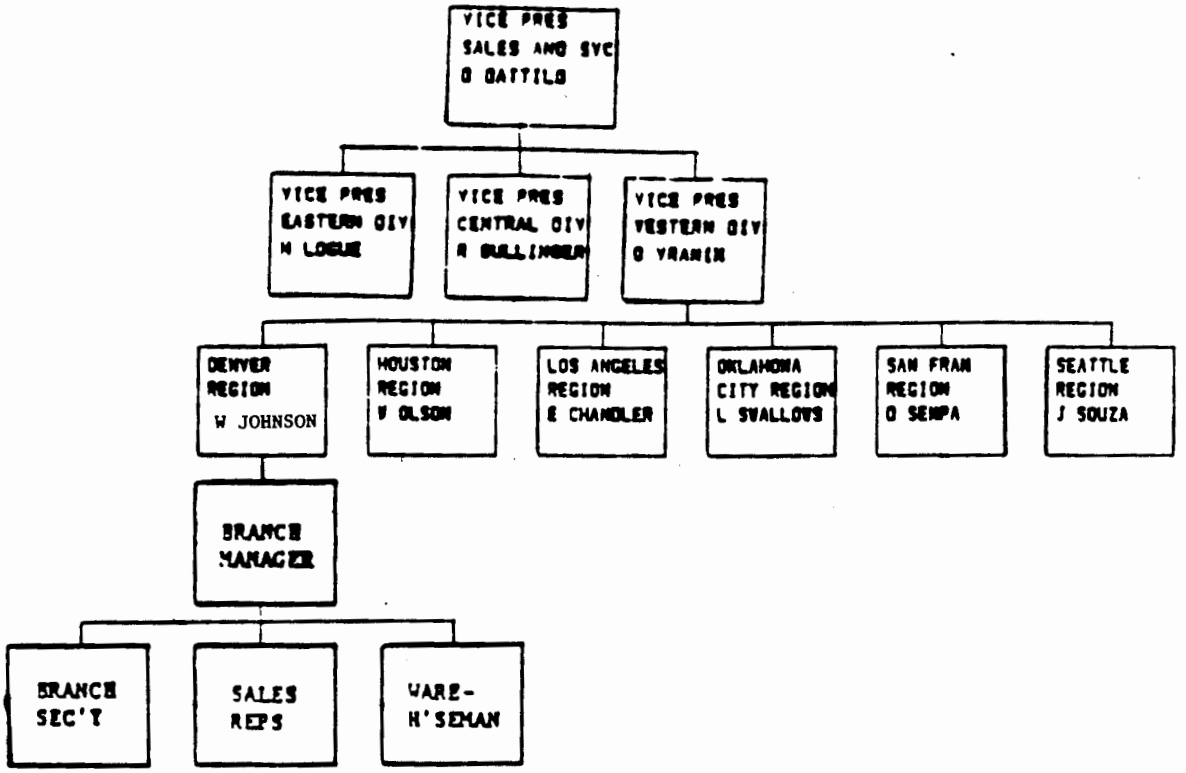

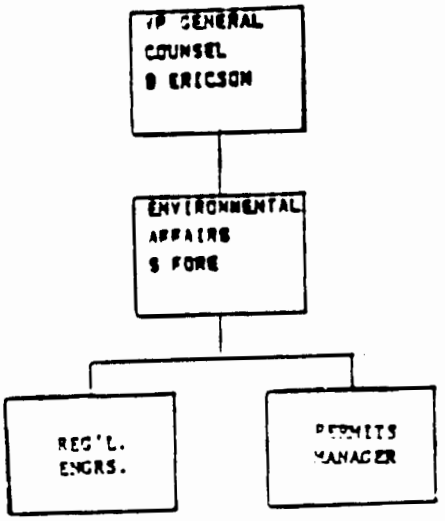

LIST OF BRANCH EMPLOYEES

EMPLOYEE	POSITION
Rick McDonald	Branch Manager

JOB DESCRIPTIONS

REGIONAL MANAGER

JOB DESCRIPTION

The Regional Manager has overall responsibility for the branch operations within a certain geographic area defined by the Corporate Marketing Department. He is responsible for the proper operations and profitability of several (six to eight) service centers in his region.

REPORTS TO:

Divisional Vice President of Sales

QUALIFICATION:

Minimum high school graduate with Safety-Kleen management experience.

PRINCIPAL RESPONSIBILITIES:

1. Plan, direct, and monitor activities of branch managers.

2. Training of branch managers and branch secretaries.

3. Assist branch managers with their administrative and sales activities, when necessary.

4. Monitor sales and inventory figures and report them to the corporate offices.

5. Insure that the facility and equipment are inspected regularly, and necessary repairs or remedial actions are implemented.

6. Represent Safety-Kleen Corp. in local community affairs and public relation activities.

7. Coordinate with corporate Technical Services and Environmental Engineering Departments and implement necessary actions or plans for regulatory compliance.

BRANCH MANAGER

JOB DESCRIPTION

The Branch Manager has overall responsibility for the facility operations and maintenance, and directs sales activities within a certain geographic area defined by the Corporate Marketing Department. He is responsible for the proper operations and profitability of the service center.

REPORTS TO:

Regional Manager of Sales

QUALIFICATION:

Minimum high school graduate with Safety-Kleen sales experience.

PRINCIPAL RESPONSIBILITIES:

1. Plan, direct, and monitor activities of Sales Representatives.

2. Training of sales representatives and other branch personnel.

3. Assist or accompany sales representatives during their sales activities, when necessary.

4. Tabulate daily sales and inventory figures and report them to the corporate offices.

5. Maintain adequate inventory of solvents, allied products, and equipment.

6. Carry out corporate policies and standards regarding facilities, equipment operation and maintenance.

7. Inspect facility and equipment regularly, and implement necessary repairs or initiate remedial actions.

8. Represent Safety-Kleen Corp. in local community affairs and public relation activities.

9. Coordinate with corporate Technical Services and Environmental Engineering Departments and implement necessary actions or plans for regulatory compliance.

RESUME

THOMAS R. HEATON

Position: Environmental Engineer
Environmental Affairs Department - Safety-Kleen Corp.

Education: M.S., Department of Technology & Human Affairs, Sever Institute of Technology, Washington University, St. Louis, MO (1978).

B.S., Zoology & Environmental Affairs, Butler University, Indianapolis, IN (1976).

Employment Experience:

Senior Environmental Specialist, Borden Inc., Columbus, OH, Nov. 1980 - Sept. 1986

Environmental Scientist, Ohio Environmental Protection Agency, Nov. 1978 - Nov. 1980

Additional Training:

Underground Storage Tank Management, Ohio Petroleum Council, Worthington, OH, 1986

Groundwater Contamination Seminar, Center for Energy and Environmental Management (CEEM), Schaumburg, IL, 1984

Uncontrolled Waste Site Workshop, Vanderbilt University continuing education, Indianapolis, IN, 1981

Various seminars on RCRA and Superfund

Publications:

"Public Participation in the National Pollutant Discharge Elimination System in Missouri", M.S. Degree Thesis, Washington University, 1978

"Brine Disposal from the Oil and Gas Industry in Ohio", Ohio EPA, 1980

RESUME

ELLEN J. JURCZAK

Position: Environmental Engineer - Permits Manager
Safety-Kleen Corp.

Education: Master of Business Administration, Loyola University (1984)

B.S. Environmental Engineering, Northwestern University (1979)

Employment Experience:

Environmental Engineer
Safety-Kleen Corp.
July, 1984 - Present

Senior Project Engineer
Ecology and Environment, Inc., Chicago
September, 1980 - July, 1984

Assistant Project Engineer
U.S. EPA National Enforcement Investigation Center
Denver, Colorado July, 1979 - September, 1980

Student-In-Training
U.S. EPA, Chicago
August, 1977 - July 7, 1979

Professional Affiliations:

Professional Engineer, Registered in the State of Illinois

Member of the American Chemical Society

Member of the American Society of Civil Engineers

Additional Training:

Attended the National Conference on Environmental Engineering in 1982 and 1983

Completed an ASCE course on Hazardous Waste Management, 1982

Trained in methods of air, surface water, groundwater and soil sampling

Attended various seminars on RCRA and Superfund

Conducted training of branch personnel:
Kansas City Region, Chicago Region, Detroit Region, and San Francisco Region in September - October, 1985

Participated in training of regional managers, May 1985

Conducted training of Minnesota branch personnel, July 1985

Conducted training of Missouri branch personnel, February, 1985

Conducted training of Hebron Recycle Center personnel, March, 1985

Conducted training of Elgin Recycle Center personnel, November, 1984

RESUME

SUZANNE A. RYAN

Position: Regional Environmental Engineer - Central Region
Safety-Kleen Corp.

Education: B.S. Chemical Engineering, University of Michigan (1981)

Employment Experience:

Environmental Engineer
Safety-Kleen Corp.
December 1985 - Present

Project Engineer
Ecology and Environment, Inc., Chicago
August, 1981 - December 1985

Associate Chemist
Atlantic Richfield Co., Harvey, Illinois
Summer 1979 and Summer 1980

Professional Affiliations:

Member of the American Institute of Chemical Engineers

Engineer-in-Training; in the State of Illinois

Additional Training:

Attended annual meeting of the American Institute of Chemical Engineers

Attended seminars on underground storage tank regulations in 1984 and 1986

Trained in methods of air, surface water, groundwater, and soil sampling

Attended various EPA seminars on Superfund programs

Conducted training of Regional Managers, August, 1986

RESUME

JEFFREY E. SIMPSON

Position: Regional Environmental Engineer - New England Region
Safety-Kleen Corp.

Education: B.S. Engineering and Public Policy (B.S. EPP)
Washington University, St. Louis, Missouri, School of Engineering and Applied Science. (May, 1980)
Curriculum Focus: Environmental Engineering and Policy Analysis.

Employment Experience:

Environmental Engineer
Safety-Kleen Corp., May, 1980 - Present

Employed as an Environmental Engineer with responsibility for handling Environmental Affairs in 8 states. Includes training of employees, preparation of contingency plans and regulatory affairs.

Professional Organizations:

Government Refuse Collection and Disposal Association

Additional Training:

Conducted training of Regional Managers, August, 1986

Hazardous Waste Incineration Today, sponsored by Georgia Institute of Technology, February 13-14, 1986

1984 Hazardous Material Spills Conference, sponsored by Association of American Railroads/Bureau of Explosives, Chemical Manufacturers Association, U.S. Coast Guard, U.S. EPA, April 9-12, 1984

1983 Source Reduction Conference, sponsored by Massachusetts Department of Environmental Management, October 13, 1983

1983 Hazmat Conference, sponsored by Pollution Engineering Magazine, July 12-14, 1983

Northeast Conference on Hazardous Waste, sponsored by Environmental Hazards Management Institute, November 9-12, 1982

1982 Hazardous Material Spills Conference, sponsored by Bureau of Explosives, Chemical Manufacturers Association, U.S. Coast Guard, U.S. EPA, April 19-22, 1982

Hazardous Waste Management Technologies and Practices, sponsored by Government Refuse Collection and Disposal Association, March 29-31, 1982

A Review of the Resource Conservation and Recovery Act, sponsored by DOW Chemical Company, October, 1980

Research Experience:

Trash-to-Energy Project - Bi-State Development Agency, St. Louis, Missouri (1979-1980). Involved with project to prepare and implement a trash-to-energy plan for the Bi-State area of Illinois and Missouri.

Center for Technology Assessment and Policy Studies - Rose-Hulman Institute of Technology, Terre Haute, Indiana (1978). Awarded a fellowship to participate in a summer program in Technology Assessment. Studied the tools and methods of technology assessment. A Technology Assessment entitled, "The Impact of the Surface Mining Control and Reclamation Act of 1977 Upon the State of Indiana: An Assessment", was prepared and presented to coal company officials and state and federal officials.

Public Policy Decision-making Under the Delaney Amendment (1978). Compiled and analyzed data relating incidence of carcinogenesis to treatment of laboratory animals with saccarin. Estimated probabilities of carcinogenesis using techniques of Bayesian statistics.

St. Louis County Ambulance Study (1978). Responsible for collecting and analyzing data for a cost-effectiveness study of ambulance service in St. Louis County for the Greater St. Louis Health Systems Agency.

Publications:

The Impact of the Surface Mining Control and Reclamation Act of 1977 Upon the State of Indiana: An Assessment, Center for Technology Assessment and Policy Studies, August 11, 1978. Co-author.

RESUME

ROBERT WACHSMUTH

Position: Regional Environmental Engineer - Western Region
Safety-Kleen Corp.

Education: B.S. Civil Environmental Engineering,
Michigan Technological University (1976)

Employment Experience:

Environmental Engineer,
Safety-Kleen Corp., January 18, 1982 - Present

Senior Environmental Engineer, Ecology and Environment
June 1, 1980 - January 15, 1982

Project Engineer, Aquatechnics, Inc.
September, 1978 - June, 1980

Project Engineer, RJN Environmental Associates, Inc.
March, 1978 - September, 1978

Designer, Illinois Central Gulf Railroad
November, 1976 - March, 1978

Junior Engineer, Dames & Moore
April, 1976 - November, 1976

Registrations and Memberships:

American Society of Civil Engineers
Water Pollution Control Federation

Training Experience:

Underground Tank Storage of Hazardous Materials
Sacramento, California in August, 1984

Seminar on Hazardous Waste Management in Phoenix, Arizona
February, 1983

Hazardous Materials Workshop & Exposition, Cincinnati, Ohio
October, 1982

Hazardous Materials Spill Conference, Milwaukee, Wisconsin
April, 1982

RCRA Training Course, U.S. EPA Region V, Chicago, Illinois
February, 1981

Generators & Transporters Training Course (New England Research), Chicago, Illinois, February, 1981

EPA Field Investigation Team Training Program Ecology and Environment, Chicago, Illinois, July, 1980

Safety and Health in EPA Field Activities, U.S. EPA Region V (Norman Steare and Assoc.), June, 1980

Conducted Recycle Center Manager Training, April, 1986

Conducted Branch Manager and Secretary Hazardous Waste Training in Western Division, September, 1985

Conducted Branch Personnel Training at three (3) branches in Southern California, March, 1984

Conducted Branch Personnel Training in Oregon and Washington, October, 1983

Conducted training of Regional Managers, August, 1986

RESUME

STANLEY A. WALCZYNSKI

Position: Regional Environmental Engineer - Atlantic Region
Safety-Kleen Corp.

Education: Masters in Business Administration, University of Chicago
B.S. Civil Engineering, Bradley University

Employment Experience:

Environmental Engineer,
Safety-Kleen Corp., July, 1985 - Present

Regional Engineer - Environmental Management
Waste Management, Inc., 1982 - July, 1985

Project Engineer
Donohue & Associates, Inc./Warren & Van Praag, 1978 - 1982

Project Engineer/Associate Engineer
PRC - Consoer Townsend, 1974 - 1978

Professional Affiliations:

Registered Professional Engineer in Illinois, Indiana and Kansas

American Society of Civil Engineers (Education Committee Chairman)

American Public Works Association

Additional Training/Seminars:

Hazardous Waste Regulations Course, Government Institutes, 1983

Wetlands Preservation & Conservation Planning, 1980

Hazardous Materials Conference, 1984

Alternate Hazardous Waste Management Conference, 1985

Training Experience:

Conducted training of Branch Managers and Secretaries - Safety-Kleen Corp., August-October, 1985

Conducted environmental training of compliance officers - Waste Management, Inc., 1983 - 1984

Conducted training in public works engineering including emergency response management, 1982 - 1984

Conducted training of Regional Managers, August, 1986

TRAINING PLAN OUTLINE

ANNUAL ENVIRONMENTAL COMPLIANCE COURSE
FOR REGIONAL MANAGERS, BRANCH MANAGERS AND SECRETARIES

I. Opening Remarks

II. Environmental Laws - National

A. Introduction

B. The National Environmental Policy Act (NEPA)

1. Purpose

2. Procedure: The Environmental Impact Statement

C. The Clean Air Act (CAA)

1. Purpose

2. How the Act Works

D. The Clean Water Act (CWA)

1. Purpose

2. Effluent Limitations for Direct Discharges

3. Pretreatment Standards for Indirect Discharges to Publically Owned Treatment Works (POTW)

4. Permit Program

E. The Resource, Conservation and Recovery Act (RCRA)

1. Purpose

F. The Toxic Substances Control Act (TSCA)

1. Purpose

2. How TSCA Works

G. The Comprehensive Environmental Response, Compensation, and Liability Act ("CERCLA" or "Superfund")

1. Purpose

2. Superfund clean-up

III. Resource, Conservation and Recovery Act (RCRA)

A. Overview and Scope

B. Hazardous Waste Management

1. Implementation

2. Identification and Listing of Hazardous Waste

a. Listed Wastes

b. Characteristic Wastes

c. Waste Mixtures

3. Generator Regulation

a. General requirements

b. Generator categories: 100-1000 kg./mo. generators

4. Transporter Regulation

a. General requirements

b. Discharges of hazardous waste during transportation

5. Treatment, Storage or Disposal Facility Regulation

a. General requirements

b. Interim status facilities

c. Permitted facilities

6. Enforcement

a. Inspections

b. Compliance Orders

c. Criminal Violations

d. Knowing Endangerment

e. Enforcement activity

C. New RCRA Programs

1. Leaking Underground Storage Tanks

a. The requirements

b. New Tank Ban

c. Notifications

IV. Facility Operation: Interim Status

A. Part A Application

B. Waste Analysis Plan

C. Preparedness and Prevention Plan

D. Contingency Plan and Emergency Procedure

E. Training

F. Closure

G. Inspections

H. Transportation Licensing

V. Manifesting

A. Overview

B Manifesting: Branch-Specific Instruction

VI. Certification Examination

VII. Sales Application of Environmental Compliance

VIII. Adjourn

TRAINING PLAN OUTLINE

FOR

BRANCH EMPLOYEES

I. Purpose of Training and a Review of the Training Plan Outline

II. Environmental Regulations and Customer Responsibilities

- a. Small Quantity Generator vs. Generator
- b. Manifesting - How to Complete and Distribute a Manifest
- c. EPA Identification Numbers

III. Transportation Regulations

- a. Permits
- b. Vehicle Inspections and Records

IV. Waste Analysis Plan - Analyzing Incoming Shipments

V. Preparedness and Prevention Plan

- a. Performing and Recording a Facility Inspection
- b. Proper Maintenance of Storage Facilities and Associated Equipment
- c. Emergency Equipment - Availability and Use

VI. Contingency Plan

- a. Implementation of the Contingency Plan - Personnel and Emergency Functions
  - 1. Spills and Fires and Proper Response Actions
    - a. On Site Accidents
    - b. Transportation Accidents
  - 2. Reporting Requirements
    - a. Safety-Kleen Corp.
    - b. State Emergency Response System
    - c. National Response Center
- b. Emergency Information
- c. Corporate Policies 600-608, 609 and 610
  - 1. Review of Material Safety Data Sheets
- d. Recordkeeping - Spill Report Telephone Log

safety-kleen®

PROTECTING YOU AND THE ENVIRONMENT

Training Record for New Employees

Branch Number __ / ___ / __

Branch Manager _____

New Sales Representative _____ Date Hired _____

Module Title	Initials	Date Seen
1. Accidental Product Releases-Transportation & Customer Related	_____	_____
2. Accidental Product Releases at the Branch	_____	_____
3. Material Safety Data Sheets - Overview	_____	_____
4. Material Safety Data Sheets - Safety & Health Related Information	_____	_____
5. The Manifest	_____	_____
_____	_____	_____
_____	_____	_____
_____	_____	_____
_____	_____	_____
_____	_____	_____

Certification by the employee that training has been received obligates the employee to discharge his duties in accordance with the training provided. Failure to comply with the requirements established during the training program may result in civil or criminal penalties against the employee.

White Copy - Branch Files
Yellow Copy - Regional Files
Pink Copy - Sales Training and Development

Printed in U.S.A. ©1986

Form ST101

safety-kleen

PROTECTING YOU AND THE ENVIRONMENT

Training Record

Module _____ Title _____

Branch Number __/__ __ __/__ __

Branch Manager _____

Sales Representative

Print Name Clearly	Initials	Date Seen

White Copy - Branch Files
Yellow Copy - Regional Files
Pink Copy - Sales Training and Development

Printed in U.S.A. ©1985

Certification by the employee that training has been received obligates the employee to discharge his duties in accordance with the training provided. Failure to comply with the requirements established during the training program may result in civil or criminal penalties against the employee.

RECORD OF PERSONNEL TRAINING

Certification by the employee that training has been received obligates the employee to discharge his duties in accordance with the training provided. Failure to comply with the requirements established during the training program may result in civil or criminal penalties against the employee.

DATE	DESCRIPTION OF TRAINING	JOB TITLE	EMPLOYEE NAME	EMPLOYEE SIGNATURE

Appendix H

Financial Requirements

CLOSURE SCHEDULE

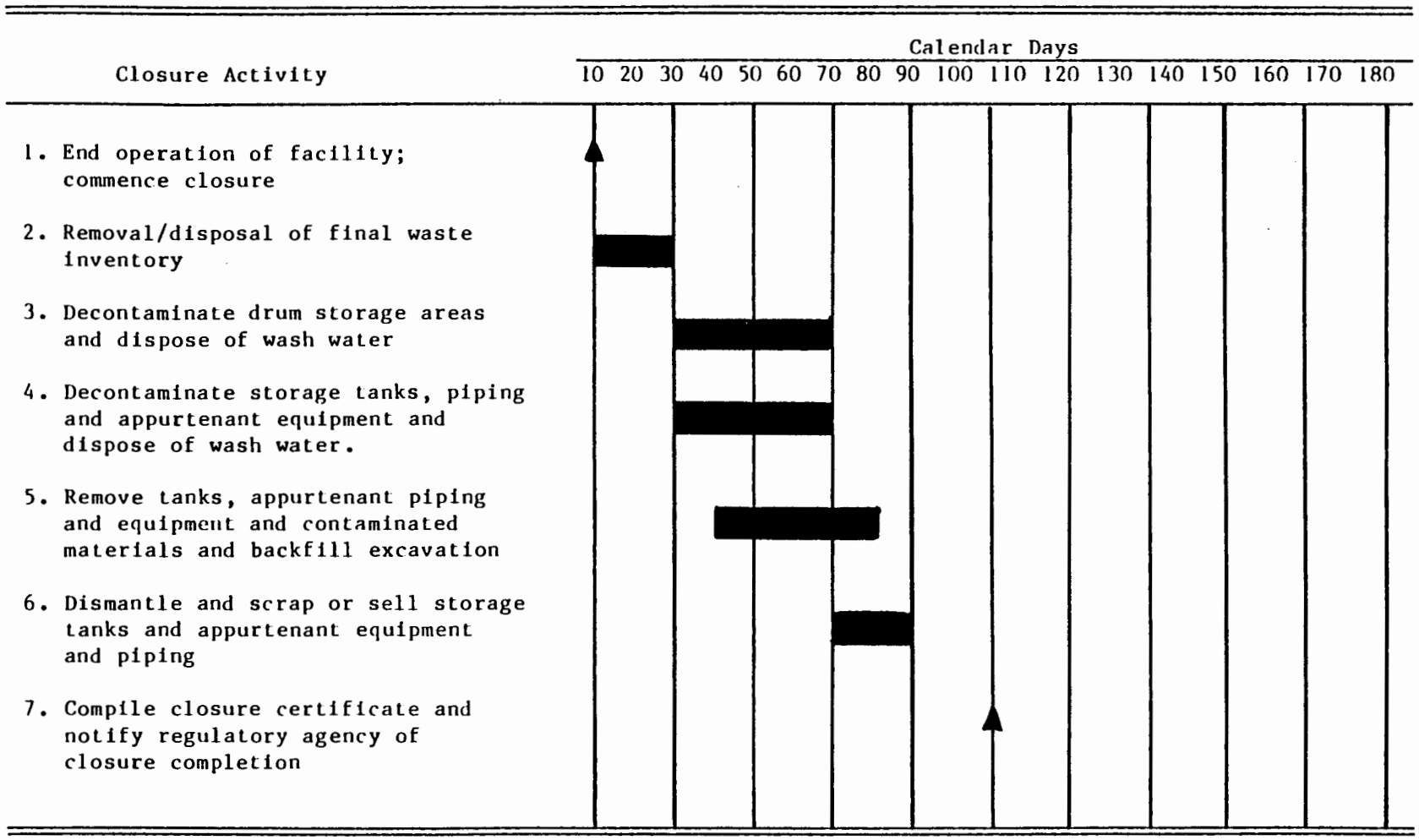

FARMINGTON, NEW MEXICO SERVICE CENTER
CLOSURE COST ESTIMATE

ABOVEGROUND TANK AND ASSOCIATED PIPING

Removal of Waste Material and Opening of Tank

12,600-gallon tanks assumed containing 12,600 gallons of material each (20% water, 1% bottoms oil, and 79% mineral spirits):

a.	Water 20% @ 12,600 x $0.15/gal. =	$ 378
b.	Bottoms Oil 1% @ 12,600 x $0.50/gal. =	63
c.	Mineral Spirits 79% @ 12,600 x $0.30/gal.=	2,986
Total		$3,427

Removal of Residual Waste and Cleaning of Tank

Squeegie Clean Tank =	$ 600
Disposal of Wash Water (500 gal. x $0.15/gal.)	75
Total	$ 675

Removal of the Tank

Disconnect and remove appurtenant equipment 2.0 man-days @ $15/hour =	$ 240
Cut up the tank with a blow torch 8 hours @ $20/hour =	160
Remove tank	250
Demolition of concrete diking and pad	4,000

Removal and disposal of concrete 32 cy @ $4.50/cy =	144
Replace any previously excavated material 60 cy @ $5/cy (estimate) =	300
Regrading	100
Debris Disposal	250
Total	$5,444

Summary of Closure Cost for the 12,600-gallon tank:

Opening of Tank and Removal of Waste Material	$3,427
Removal of Residual Waste and Cleaning of Tank	675
Removal of the Tank	5,444
Total	$ 9,546

DRUM STORAGE AREA IN WAREHOUSE

Remove drums and reclaim solvents 180 drums x $30/drum =	$5,400
Clean the storage areas 10 man-hours @ $15.00/hour =	150
Cost to determine effectiveness of cleaning	500
Dispose of the wash water 100 gallons @ $0.15/gal. =	15
Total	$6,065

SOLVENT RETURN AND FILL STATION -

Remove, package and dispose of sediment 4 55-gallon drums x $300/drum =	$1,200
Remove and dispose of liquid 55 gallons x $0.30/galon =	17
Liquid waste 100 gallons x $0.30/gallon	30

Clean dumpster and dock area 10 man-hours @ $15.00/hour =	150
Remove dumpster and dock 10 man-hours @ $20.00/hour =	200
Disposal of Wash Water (200 gal. x $0.15/gal.)	30
Total	$1,627

DECONTAMINATION OF CLEAN UP EQUIPMENT

8 hours @ $15.00/hour	$ 120

SOIL TESTING

1 hour @ $45.00/hour	$ 45

CERTIFICATION	$ 500

TOTAL CLOSURE COSTS

Aboveground Tank	$ 9,546
Drum Storage Area in Warehouse	6,065
Solvent Return and Fill Station	1,627
Decontamination of Clean Up Equipment	120
Soil Testing	45
Certification	500
TOTAL	$17,903

The remaining $2,097 is available for any additional expenses such as analysis and disposal of contaminated soil. The extent of contamination, if any, can not be determined at this time so an accurate cost estimate for this work can not be calculated.

safety-kleen.

Director
New Mexico Environmental Improvement Division
P.O. Box 968
Santa Fe, NM 87504-0968

Dear Sir:

I am chief financial officer of Safety-Kleen Corp., 777 Big Timber Road, Elgin, Illinois, 60123. This letter is in support of this firm's use of the financial test to demonstrate financial assurance as specified in the New Mexico Hazardous Waste Management Regulations, Part II 206.C.3 and 206.D.3.

1. This firm is the owner or operator of the following facilities for which financial assurance for closure or post-closure care is demonstrated through the financial test specified in New Mexico Hazardous Waste Management Regulations, Part II 206.C.3 and 206.D.3. The current closure and/or post-closure costs estimates covered by the test are shown for each facility: total per attached listing - $40,000

2. This firm guarantees, through the corporate guarantee specified New Mexico Hazardous Waste Management Regulations Part II 206.C.3 and 206.D.3, the closure or post-closure care of the following facilities owned or operated by subsidiaries of this firm. The current cost estimates for the closure or post-closure care so guaranteed are shown for each facility: $10,000

3. This firm is the owner or operator of the following hazardous waste management facilities for which financial assurance for closure or, if a disposal facility, post-closure care is not demonstrated either to the New Mexico Environmental Improvement Division through the financial test or any other financial assurance mechanism specified in New Mexico Hazardous Waste Management Regulations, Part II 206.C.3 and 206.D.3. The current closure and/or post-closure cost estimates not covered by such financial assurance are shown for each facility: total per attached listing $6,390,000.

This firm is required to file a Form 10K with the Securities and Exchange Commission (SEC) for the latest fiscal year.

The fiscal year of this firm ends on the Saturday closest to December 31. The figures for the following items marked with an asterisk are derived from this firm's independently audited, year-end financial statements for the latest completed fiscal year, ended January 3, 1987.

(con't)

777 BIG TIMBER ROAD ELGIN, ILLINOIS 60120 PHONE 312/697-8460 TELEX 910 251 4479

Alternative I

1.	Sum of current closure and post-closure costs estimates	$ 6,440,000
*2.	Total liabilities	$ 75,317,000
*3.	Tangible net worth	$134,451,000
*4.	Net worth	$137,445,000
*5.	Current assets	$ 79,085,000
*6.	Current liabilities	$ 37,097,000
*7.	Net working capital (line 5 minus line 6)	$ 41,988,000
*8.	The sum of net income plus depreciation, depletion, and amortization	$ 43,016,000
*9.	Total assets in U.S.	$195,029,000

		YES	NO
10.	Is line 3 at least $10 million?	X	
11.	Is line 3 at least 6 times line 1?	X	
12.	Is line 7 at least 6 times line 1?	X	
*13.	Are at least 90% of firm's assets located in the U.S.?	X	
14.	Is line 9 at least 6 times line 1?	X	
15.	Is line 2 divided by line 4 less than 2.0?	X	
16.	Is line 8 divided by line 2 greater than 0.1?	X	
17.	Is line 5 divided by line 6 greater than 1.5?	X	

I hereby certify that the wording of this letter is identical to the wording specified in New Mexico Hazardous Waste Management Regulations, Part II 206.D.3.j.(6) as such regulations were constituted on the date shown immediately below.

Robert W. Willmschen

Robert W. Willmschen
Vice President - Finance
March 20, 1987

RWW/pz

CLOSURE ASSURANCE - FINANCIAL TEST

CATEGORY #1 (See Transmittal Letter for Description)

STATE OF NEW MEXICO

Albuquerque ($20,000)	(7-008-01)	2720 Girard NE Albuquerque, NM 87107	NMD 000804294
Farmington ($20,000)	(7-008-21)	4200A Hawkins Road Farmington, NM 87401	NMD 980698849
$40,000			

CATEGORY #2 (See Transmittal Letter for Description)

Phillips Manufacturing Co. 7334 N. Clark Street Chicago, IL 60626 ($10,000)	ILD 005474143

CATEGORY #3 (See Transmittal Letter for Description)

STATE OF ALABAMA

olomite ($20,000)	(3-019-01)	1002 Hoke Avenue Dolomite, AL 35061	ALD 077640001
Gurley ($20,000)	(3-019-02)	201 Section Line Street Gurley, AL 35748	ALD 000776807
Huntsville ($50,000)	(0-007-49)	Colemont Ind. Site U.S. 72 East Huntsville, AL	ALD 981028798
Montgomery ($20,000)	(3-019-21)	4815 N. Birmingham Montgomery, AL 36308	ALT 020010997
Whistler ($20,000)	(6-133-01)	3023 Dials Street Whistler, AL 36612	ALD 071951628

STATE OF ARIZONA

Phoenix ($20,000)	(7-142-01)	4401 E. University Phoenix, AZ 85034	AZD 089308803
Tucson ($20,000)	(7-142-02)	4161 E. Tennessee Tucson, AZ 85714	AZD 980892897

STATE OF ARKANSAS

Little Rock ($20,000)	(6-086-01)	11727 Arch St. Pike Little Rock, AR 72206	ARD 054575238
Fort Smith ($20,000)	(6-063-01)	2511 Johnson Street Fort Smith, AR 72904	ARD 000709733
West Memphis ($20,000)	(6-094-01)	309 Mound City Road Between I 55 and 40 West Memphis, AR 72301	ARD 056855232

STATE OF CALIFORNIA

El Monte ($20,000)	(7-088-06)	10625 Hickson Street Unit A El Monte, CA 91731	CAT 000613893
Fresno ($20,000)	(7-015-01)	3561 S. Maple Street Fresno, CA 93725	CAD 066113465
Gardena ($20,000)	(7-088-04)	139 E. 157th Street Gardena, CA 90248	CAT 000613919
ghland ($20,000)	(7-172-01)	7979 Palm Ave., Unit E Highland, CA 92346	CAT 000613927
Los Alamitos ($20,000)	(7-088-05)	3876 Florista Street Los Alamitos, CA 90270	CAD 066177783

Los Angeles ($20,000)	(7-088-02)	2918 Worthen Avenue Los Angeles, CA 90039	CAT 000613935
Oakland $20,000)	(7-178-01)	404 Market Street Oakland, CA 94607	CAD 053044053
Pomona ($10,000)		2750 Thompson Creek Rd. Pomona, CA 91767	CAD 980894562
Reedley Recycle Center ($100,000)		1000 South I Street Reedley, CA 93654	CAD 093459485
Rohnert Park ($20,000)	(7-178-03)	5750 Commerce Blvd. Rohnert Park, CA 94928	CAT 000613943
Rancho Cordova ($20,000)	(7-157-01)	2576 Mercantile Drive Rancho Cordova, CA 95670	CAT 000613950
Salida ($20,000)	(7-185-01)	5050 Salida Blvd. Salida, CA 95368	CAT 000613968
San Diego ($20,000)	(7-185-01)	499 Raven Street San Diego, CA 92114	CAD 980892475
San Diego ($20,000)	(7-175-01)	6306 Federal Blvd. San Diego, CA 92114	CAD 080916968
Santa Ana ($20,000)	(7-088-07)	2120 South Yale Street Santa Ana, CA 92704	CAT 000613976
Santa Barbara ($20,000)	(7-177-01)	214 E. Montecito Street Santa Barbara, CA 93103	CAT 000613984
Santa Barbara ($20,000)	(7-177-01)	5310 Overpass Road Goleta, CA 93103	CAD 981374077
San Jose ($20,000)	(7-178-02)	1147 N. 10th Street San Jose, CA 95112	CAD 980817159
Sylmar ($20,000)	(7-088-01)	13024 Bradley Avenue Sylmar, CA 91342	CAT 000613992

STATE OF COLORADO

Commerce City ($20,000)	(6-052-01)	4980 Locust Street Commerce City, CO 80022	COD 000716613
Englewood ($50,000)	(6-052-02)	2801 S. Tejon Englewood, CO 80110	COD 000716621
Grand Junction ($20,000)	(6-052-21)	368 Bonny Grand Junction, CO 81501	COT 090010851
Pueblo 20,000)	(6-052-04)	2841 East Fourth Street Pueblo, CO 81001	COD 000716639

STATE OF CONNECTICUT

Branford ($20,000)	(2-112-01)	11 Tipping Drive Branford, CT 06405	CTD 980667927
West Hartford ($20,000)	(2-070-01)	24 Brixton Street West Hartford, CT 06110	CTD 000845982

STATE OF FLORIDA

Casselberry ($20,000)	(3-130-01)	464 A Pulmosa Drive Casselberry, FL 32707	FLD 097837983
Delray Beach ($20,000)	(3-097-01)	16086 SW 4th Ave., Bldg. B Delray Beach, FL 33444	FLD 000776757
Orange Park ($20,000)	(3-079-01)	161 Industrual Loop South Orange Park, FL 32073	FLD 980847214
Miami ($20,000)	(3-097-02)	7875 NW 54th Street Miami, FL 33166	FLD 980840086
Port Charlotte ($20,000)	(3-163-02)	19200 Peachland Blvd. Bachman Blvd. Port Charlotte, FL 33949	FLD 000776716
Tallahassee ($20,000)	(3-079-02)	3082 West Tharpe Street (Rear) Tallahassee, FL 32303	FLD 000776773
Tampa ($20,000)	(3-163-01)	4701 North Manhattan Tampa, FL 33614	FLD 049557408
Tampa ($50,000)	(0-007-50)	5309 24th Ave. South Tampa, FL 33619	FLD 98047271

STATE OF GEORGIA

Columbus ($20,000)	(3-106-01)	5920 Coca Cola Blvd. Columbus, GA 31909	GAD 000823096
Garden City ($20,000)	(3-179-01)	5217 Augusta Road P.O. Box 7036 Garden City, GA 31408	GAD 000776781
Hapeville ($20,000)	(3-013-01)	3440 Lang Avenue Hapeville, GA 30354	GAD 000823070
Macon ($20,000)	(3-106-21)	6850 Hawkinsville Road Macon, GA 31207	GAD 980709257
Norcross ($50,000)	(3-013-02)	4800 S. Old Peachtree Road Norcross, GA 30091	GAD 980842777
nggold ($20,000)	(3-019-22)	RR #5, Dietz Road Ringgold, GA 30736	GAD 980842835

STATE OF IDAHO

Boise ($20,000)	(1-183-08)	514 E. 45th Street Boise, ID 83704	IDD 000712026
Pocatello ($20,000)	(1-183-28)	2610 Garrettway Pocatello, ID 83201	IDD 991281270

STATE OF ILLINOIS

Arlington Heights ($20,000)	(5-034-03)	306 Campus Drive Arlington Heights, IL 60004	ILD 000805929
Elgin Recycle Center ($300,000)		1500 E. Villa Street Elgin, IL 60120	ILD 000805911
Caseyville ($50,000)	(5-160-02)	20 Tucker Drive Caseyville, IL 62232	ILD 981097819
Chicago Plant ($275,000)		1445 W. 42nd Street Chicago, IL 60609	ILD 005450697
Franklin Park ($20,000)	(5-034-04)	412 Domenic Court Franklin Park, IL 60131	ILD 000665869
Mokena ($20,000)	(5-034-05)	9631 West 194th Place Mokena, IL 60448	ILD 000665851
Pekin ($20,000)	(5-136-01)	RR #3 Pekin, IL 61554	ILD 093862811
Schaumburg ($20,000)	(5-034-01)	728 Morse Avenue Schaumburg, IL 60193	ILD 079749073
Urbana ($20,000)	(5-033-01)	500 Anthony Drive Urbana, IL 61801	ILD 981088388

STATE OF INDIANA

Evansville ($20,000)	(5-060-01)	4417 St. Joe Street Evansville, IN 47712	IND 000815894
Fort Wayne ($20,000)	(5-068-01)	2112 Production Road Ft. Wayne, IN 46808	IND 000715466
Indianapolis-E ($20,000)	(4-076-02)	8418-26 Brookville Road Indianapolis, IN 46239	IND 000815886
Portage ($20,000)	(5-034-06)	6050 Eagle Drive Portage, IN 46368	IND 000714428
South Bend ($20,000)	(5-082-01)	2217 Western Avenue South Bend, IN 46628	IND 000715474

STATE OF IOWA

Davenport ($20,000)	(5-047-01)	3035 West 73rd Street Davenport, IA 52806	IAD 098027592
Grimes ($20,000)	(5-053-01)	5318 NW 111 Drive, RR #2 Grimes, IA 50111	IAD 083489773
Mason City ($20,000)	(5-093-01)	16 SW 11th Street Mason City, IA 50401	IAD 000678326

STATE OF KANSAS

Kansas City ($20,000)	(5-085-01)	11565 K-32 Highway Kansas City, KS 66111	KSD 000687681
Dodge City ($20,000)	(6-195-21)	600 East Trail Dodge City, KS 67801	KSD 980686844
Wichita ($20,000)	(6-195-01)	1311 South Anna Wichita, KS 67209	KSD 000809723
Edwardsville ($20,000)	(5-085-01)	9317 Woodend Road Edwardsville, KS 66022	KSD 980973515

STATE OF KENTUCKY

.shland ($20,000)	(4-075-01)	1592 Wolohan Drive Ashland, KY 41101	KYD 000776724
Ashland ($20,000)	(4-075-01)	West Virginia & Kevin Aves. Ashland, KY 41105	KYD 981027451
Lexington ($20,000)	(4-090-01)	264 Big Run Road Lexington, KY 40503	KYD 020440459
Lexington ($20,000)	(4-090-01)	550 Blue Sky Parkway Lexington, KY 40509	KYD 981027469
Louisville ($20,000)	(4-091-01)	751 Grade Lane Louisville, KY 40213	KYD 091514653

STATE OF LOUISIANA

Pineville ($20,000)	(6-073-04)	4200 Shreveport Highway Pineville, LA 71360	LAD 000757708
Tioga ($50,000)	(6-073-04)	518 Ryder Drive Pineville, LA 71360	LAD 981057441
Kenner ($20,000)	(6-115-01)	14 26th Street Kenner, LA 70062	LAD 089841902

STATE OF MAINE

Leeds ($20,000)	(2-011-01)	Route 202, RFD 3, Box 1990 Leeds, ME 04263	MED 980667810

STATE OF MARYLAND

Baltimore ($20,000)	(2-016-01)	1448 Desoto Road Baltimore, MD 21230	MDD 981034291
Glen Burnie ($20,000)	(2-016-02)	150 Penrod Court Section G & H Glen Burnie, MD 21061	MDD 000737106
Silver Springs ($20,000)	(2-058-01)	12164 Tech Road Silver Springs, MD 20904-1980	MDD 000737395

STATE OF MASSACHUSETTS

Bridgewater ($20,000)	(2-022-03)	128 Elm Street Bridgewater, MA 02324	MAD 000846006
Marlborough ($20,000)	(2-022-02)	50A Brigham Marlborough, MA 01752	MAD 088978143
Salisbury ($20,000)	(2-022-01)	189A Willow Street Salisbury, MA 01950	MAD 060095569
West Brookfield ($20,000)	(2-184-01)	P.O. Box C Route 9 West Brookfield, MA 01585	MAD 096287354

STATE OF MICHIGAN

Dearborn Heights ($10,000)		5316 Cummings Avenue Dearborn Hts., MI 48125	MID 980792998
Saginaw ($20,000)	(4-059-01)	3899 Wolf Road Saginaw, MI 48601	MID 981000607
Grand Rapids ($20,000)	(5-061-01)	2700 Mullins Grand Rapids, MI 49505	MID 981000615
Mt. Clemens ($20,000)	(4-055-01)	44043 North Grosebeck Mt. Clemens, MI 48043	MID 981091838
Pontiac ($20,000)	(4-055-02)	751 Orchard Lake Road Pontiac, MI 48053	MID 000722686
Romulus ($20,000)	(4-055-03)	35201 Crane Road Romulus, MI 48174	MID 000772694
Mason ($50,000)	(4-010-01)	700 Zimmerman Road Mason, MI 48854	MID 981000359

STATE OF MINNESOTA

Burnsville ($20,000)	(5-103-02)	1401 Cliff Road Burnsville, MN 55337	MND 000686188
Cloquet ($20,000)	(5-050-01)	1302 18th Street Cloquet, MN 55720	MND 000686170
St. Paul ($20,000)	(5-103-01)	180 Ryan Drive St. Paul, MN 55117	MND 000823823
Eagan ($20,000)	(5-103-02)	3227 Terminal Drive Eagan, MN 55121	MND 981097884

STATE OF MISSISSIPPI

Jackson ($20,000)	(6-078-01)	120 Richardson Drive Jackson, MS 39209	MSD 000776765
Southhaven ($50,000)	(0-007-44)	7217 Airways Avenue Southhaven, MS 38671	MSD 981030894

STATE OF MISSOURI

Blue Springs ($20,000)	(5-085-02)	24016 East 40 Highway Blue Springs, MO 64015	MOD 000669077
ape Girardeau ($20,000)	(5-030-01)	Route 2, Box 549-D Cape Girardeau, MO 63701	MOD 000669051
Columbia ($20,000)	(5-042-01)	610 Big Bear Blvd. Columbia, MO 65201	MOD 980971626
St. Charles ($20,000)	(5-160-03)	4526 Towne Court, Lot #22 Harvestowne Industrial Park St. Charles, MO 63301	MOD 095486312
Springfield ($20,000)	(6-193-02)	734 Northwest Bypass 66 Springfield, MO 65802	MOD 000669069
Independence ($50,000)	(5-085-02)	901 Yuma Independence, MO 64056	MOD 980973564

STATE OF NEBRASKA

Gering ($20,000)	(6-052-03)	RR 1, Box 15E Gering, NB 69341	MED 000687178
Grand Island ($20,000)	(5-065-01)	Highway 281 South Behind Grand Island Dodge. Grand Island, NB 68801	MED 000687186
aaha ($20,000)	(5-127-01)	14564 Grover Street Omaha, NB 68144	NED 020185138

Omaha ($50,000)	(5-127-01)	Lamont & 139th St. Omaha, NB 68144	NED 981495724

STATE OF NEVADA

North Las Vegas ($20,000)	(7-087-01)	1655 Stocker Street North Las Vegas, NV 89030	NVD 007096761

STATE OF NEW JERSEY

Bound Brook ($20,000)	(2-118-04)	515 E. Main Street Bound Brook, NJ 08805	NJD 000768077
Newark ($20,000)	(2-118-02)	32 Tompkins Parkway Newark, NJ 07114	NJD 000768092
Vincentown ($20,000)	(2-139-04)	Rd. 4, Red Lion Road Vincentown, NJ 08088	NJD 000768101
Clayton Recycle Center ($155,000)		Box 215, Almo Ind. Park Clayton, NJ 08312	NJD 069039626
Edgewater Park ($20,000)		1520 Village Court Edgewater Park, NJ 08010	NJD 980773477

STATE OF NEW YORK

Avon ($20,000)	(2-028-02)	1525 West Henrietta Road Avon, NY 14414	NYD 980753784
Colonie ($20,000)	(2-004-01)	Green Mountain Drive Colonie, NY 12110	APPLIED FOR
Congers ($20,000)	(2-118-01)	68 North Harrison Avenue Congers, NY 10920	NYD 000708164
Amityville ($20,000)	(2-118-08)	80 Seabro No. Amityville, NY 11701	NYD 000708198
Latham ($20,000)	(2-004-01)	72 Sicker Road Latham, NY 12110	NYD 000708206
Mattydale ($20,000)	(2-187-01)	Factory & Mitchell P.O. Box 56 Mattydale, NY 13211	NYD 000824581
Lackawanna ($20,000)	(2-028-01)	75 N. Gates Avenue P.O. Box A Lackawanna, NY 14218	NYD 981556541
Thornwood ($20,000)	(2-118-05)	9 Walnut Place Thornwood, NY 10594	NYD 000708172

Waverly ($20,000)	(2-074-01)	Route 34 North Road #1 Waverly, NY 14892	NYD 000708156
Woodside ($20,000)	(2-118-06)	58-05 52nd Avenue Woodside, NY 11377	NYD 980785760

STATE OF NORTH CAROLINA

Charlotte ($20,000)	(3-031-01)	2320 Yadkin Avenue Charlotte, NC 28205	NCD 079060059
Raleigh ($20,000)	(3-171-01)	Sommerville Industrial Building Route 3, 6225 Old State Road Raleigh, NC 27603	NCD 000776740
High Point ($50,000)	(3-064-01)	High Point Building, Inc. Mendenhall Road High Point, NC 27263	NCD 077840148
St. Pauls ($20,000)	(3-031-02)	Hwy. 301 North St. Pauls, NC 28384	NCD 980846935

STATE OF NORTH DAKOTA

Fargo ($20,000)	(1-183-03)	1537-1/2 First Avenue South Fargo, ND 58103	NDD 000716738
smarck ($20,000)	(1-183-23)	3704 Saratoga Bismarck, ND 58501	NDD 980957070

STATE OF OHIO

Kent ($50,000)	(4-040-03)	4341 Mogadore Road Kent, OH 44240	OHD 981099401
Brunswick ($20,000)	(4-040-02)	1169 Industrial Parkway Brunswick, OH 44212	OHD 000720987
Hamilton ($20,000)	(4-037-01)	4579 Port Union Road Hamilton, OH 45011	OHD 084750579
Heath ($10,000)		2041 James Parkway Heath, OH 43056	OHD 981188840
Hebron Recycle Center ($270,000)		581 Milliken Drive SE Hebron, OH 43025	OHD 980587364
Groveport ($20,000)	(4-046-01)	4465 Marketing Place Groveport, OH 43125	OHD 981000664
Oregon ($20,000)	(4-190-01)	161 North Lallendorf Oregon, OH 43616	OHD 000721001
Reynoldsburg ($20,000)	(4-046-01)	6400 North Taylor Road SW Reynoldsburg, OH 43068	OHD 000720995

Tallmadge ($20,000)	(4-040-03)	2929 Mogadore Road Tallmadge, OH 44278	OHD 000720136
Warrensville Heights ($20,000)	(4-040-01)	26309 Miles Road, Unit M1 Warrensville Heights, OH 44128	OHD 000810275
Tipp City ($20,000)	(4-037-02)	4205 Lisa Drive Tipp City, OH 45371	OHD 980683155
Toledo ($20,000)	(4-190-01)	5148 Tractor Road Toledo, OH 43616	OHD 981097876
Youngstown ($20,000)	(4-196-01)	1171-1/2 N. Meridian Road Youngstown, OH 44509	OHD 980990162
Sharonville ($20,000)	(4-037-01)	11919 Tramway Drive Sharonville, OH 45241	OHD 981187313

STATE OF OKLAHOMA

Oklahoma City ($20,000)	(6-124-01)	7825 State Hwy. 152 Wheatland, OK 73097-0128	OKD 980878474
Tulsa ($20,000)	(6-193-01)	16215 East Marshall Street Tulsa, OK 74138	OKD 000763821
Oklahoma City ($10,000)		2 NE 9th Street Oklahoma City, OK 73104	OKD 018115469

STATE OF OREGON

Springfield ($20,000)	(7-054-01)	550 Shelley Street Space C & D Springfield, OR 97477	ORD 000712067
Clackamas ($20,000)	(7-148-01)	11843 SE Highway 212 Clackamas, OR 97015	ORD 092895481
Clackamas ($50,000)	(7-148-01)	16540 SE 130th Street Clackamas, OR 97015	APPLIED FOR

STATE OF PENNSYLVANIA

Kuhnsville ($50,000)	(2-007-01)	SEMA Building, Main Street Kuhnsville, PA 18104	PAD 980552020
Clairton ($20,000)	(4-145-02)	670 Cochran Mill Road Clairton, PA 15025	PAD 000738815
Erie ($20,000)	(4-057-01)	1606 Pittsburgh Avenue Erie, PA 16505	PAD 086673407
lvern ($20,000)	(2-139-02)	Rear 147 West King Street Malvern, PA 19355	PAD 099081812
New Kingstown ($20,000)	(2-067-01)	10 Eleanor Drive New Kingstown, PA 17072	PAD 000738823

Stoystown ($20,000)	(4-077-01)	Rt. 30, 1 Mile East of Stoystown Stoystown, PA 15563	PAD 000738831
Tullytown ($20,000)	(2-139-01)	Bldg. PP, #9 River Road Tullytown, PA 19007	PAD 065716813
Westchester ($20,000)	(2-139-03)	1142 Greenhill Road Westchester, PA 19380	PAD 000738849
Wilkes-Barre ($20,000)	(2-180-01)	131 Second Street Plains Township Wilkes-Barre, PA 18705	PAD 084872043

STATE OF SOUTH CAROLINA

Greer ($20,000)	(3-066-01)	Old Gilreath Road Greer, SC 29651	SCD 981031040
Lexington Recycle Center & Branch ($300,000)		Route 5, Box 319 A Lexington, SC 29072	SCD 077995488
Florence ($20,000)	(3-043-21)	Highway 301 South Florence, SC 29501	SCD 980842785
Summerville ($20,000)	(3-179-21)	P.O. Box 2053 Rt. 17 A South Summerville, SC 29483	SCD 980709299

STATE OF SOUTH DAKOTA

Sioux Falls ($20,000)	(1-183-05)	2000 North Westport Avenue Sioux Falls, SD 57107	SDD 000716696

STATE OF TENNESSEE

Dyersburg ($20,000)	(6-051-01)	2010 Brewer Road Dyersburg, TN 38024	TND 981027410
Knoxville ($20,000)	(3-080-01)	826 Stewart Knoxville, TN 37917	TND 079025698
Nashville ($20,000)	(3-109-01)	215 Whitsett Road Nashville, TN 37210	TND 053437653

STATE OF TEXAS

Abilene ($20,000)	(6-002-01)	4234 Oil Belt Lane Abilene, TX 79605	TXD 062287883
Amarillo ($20,000)	(6-009-02)	3811 Interstate 40 East Amarillo, TX 79104	TXD 000747410

Corpus Christi ($20,000)	(6-048-01)	3820 Bratton Road Corpus Christi, TX 78415	TXD 000747402
Denton Recycle Center $520,000)		1722 Cooper Creek Road Denton, TX 76201	TXD 077603371
El Paso ($20,000)	(6-056-01)	900A Hawkins Blvd. El Paso, TX 79905	TXD 000747394
Haltom City ($20,000)	(6-049-02)	6529 Midway Road Haltom City, TX 76117	TXD 981053416
Irving ($20,000)	(6-049-01)	2130A East Grauwyler Irving, TX 75061	TXD 981052061
Longview ($20,000)	(6-194-01)	202 Michael Place Longview, TX 75602	TXD 000747378
Lubbock ($20,000)	(6-009-01)	1 Mile East of Loop 289 On Highway 62 & 82 Lubbock, TX 79408	TXD 000747436
McAllen ($20,000)	(6-048-02)	1/4 Mile North Jackson Road 1/8 Mile West International McAllen, TX 78501	TXD 083145656
Midland ($20,000)	(6-002-02)	10043-B County Rd. 125-W Midland, TX 79711	TXD 981054617
issouri City ($70,000)	(6-073-02)	1580 Industrial Road Missouri City, TX 77459	TXD 010803203
Orange ($20,000)	(6-073-03)	3304 Womack Road Orange, TX 77630	TXD 061290276
Pasadena ($20,000)	(6-073-01)	3333 Federal Road Pasadena, TX 77504	TXD 000747386
San Antonio ($20,000)	(6-169-01)	5243 Sinclair Road San Antonio, TX 78222	TXD 000729400
Waco ($20,000)	(6-049-03)	Rt. 12, Box 911 Highway 84 West Waco, TX 76710	TXD 980876015
Wichita Falls ($20,000)	(6-049-04)	1606 Missile Road Wichita Falls, TX 76306	TXD 000747428

STATE OF UTAH

Salt Lake City ($20,000)	(7-166-01)	394 Ironwood Drive Salt Lake City, UT 84115	UTD 052430741
Salt Lake City ;20,000)	(7-166-01)	1066 Pioneer Road Salt Lake City, UT 84104	UTD 980957088

STATE OF VERMONT

Barre ($20,000)	(2-105-01)	23 West Second Street Barre, VT 05641	VTD 000791699

STATE OF VIRGINIA

Bristol ($20,000)	(3-026-01)	2146 King Mill Road Bristol, VA 24201	VAD 981042955
Chesapeake ($20,000)	(3-121-01)	4545 Bainbridge Blvd. Chesapeake, VA 23320	VAD 000737346
Chester ($20,000)	(3-154-01)	1200 West 100 Road Chester, VA 23831	VAD 981043011
Vinton ($20,000)	(3-155-01)	Route 24 East of Vinton at O'Neal Drive Vinton, VA 24179	VAD 000737361

STATE OF WASHINGTON

Auburn ($20,000)	(1-181-01)	3210 C Street NE, Unit G Auburn, WA 98002	WAD 000712059
Lynwood ($20,000)	(7-092-01)	6303 212th Street SW, Suite C Lynwood, WA 98036	WAD 000712042
Pasco ($20,000)	(1-183-02)	814 E. Ainsworth Pasco, WA 99301	WAD 980978746
Spokane ($20,000)	(1-183-01)	9516 East Montgomery, Unit 16 Spokane, WA 99206	WAD 000712034

STATE OF WEST VIRGINIA

Nitro (Charleston) ($20,000)	(4-075-02)	Rock Branch Industrial Park Nitro, WV 25143	WVD 000737387
Fairmont ($20,000)	(4-145-23)	345 Locust Fairmont, WV 26554	WVD 980510895
Wheeling ($20,000)	(4-145-03)	10 Industrial Park Dr. Wheeling, WV 26003	WVD 981034101

STATE OF WISCONSIN

La Crosse ($20,000)	(5-150-01)	2109-1/2 Ward Avenue La Crosse, WI 54601	WID 980896641
North Prairie ($20,000)	(5-100-01)	113 Oakridge Drive, Lot 7 North Prairie, WI 53153	WID 045130713

Shawano ($20,000)	(5-176-01)	P.O. Box 266 Shawano, WI 54166	WID 000668822
Madison ($20,000)	(5-197-01)	2325 Daniels Street Madison, WI 53704	WID 980896633
New Berlin ($10,000)		16675 W. Glendale Road New Berlin, WI 53151	WID 066869751
Kaukauna ($20,000)	(5-176-01)	Kaukauna Ind. Park Kaukauna, WI 54130	WID 981187297
Waukesha ($20,000)	(5-100-01)	2200 S. West Avenue Waukesha, WI 53186	WID 981097769
$6,340,000			

ARTHUR ANDERSEN & CO.

CHICAGO, ILLINOIS

To Safety-Kleen Corp.:

We have examined the consolidated balance sheets of SAFETY-KLEEN CORP. and SUBSIDIARIES (the "Company") as of January 3, 1987, and December 28, 1985, and the related consolidated statements of earnings and changes in financial position for the years then ended and expressed an unqualified opinion on those statements in our report dated February 6, 1987. We have not performed any auditing procedures since that date. Our examinations were made in accordance with generally accepted auditing standards and, accordingly, included such tests of the accounting records and such other auditing procedures as we considered necessary in the circumstances.

At your request, we have read the letter dated March 20, 1987, from your chief financial officer to the various administrators of the Federal and state Environmental Protection Agencies to demonstrate both liability coverage and assurance of closure care required by EPA regulations and have compared the data therein that are specified as having been derived from the audited financial statements for the years ended January 3, 1987, and December 28, 1985, referred to above with the corresponding amounts in those financial statements. In connection with this procedure, no matters came to our attention that caused us to believe that the specified data should be adjusted.

This report relates only to the data specified above and does not extend to the financial statements of the Company, taken as a whole, for the fiscal years ended January 3, 1987 and December 28, 1985. It is furnished solely for the use of the Company and the Company's distribution to the various administrators of the Federal and state Environmental Protection Agencies and is not to be used for any other purpose.

Arthur Andersen & Co.

Chicago, Illinois,
March 6, 1987.

REPORT OF INDEPENDENT PUBLIC ACCOUNTANTS

To Safety-Kleen Corp.:

We have examined the consolidated balance sheets of Safety-Kleen Corp. (a Wisconsin corporation) and Subsidiaries as of January 3, 1987 and December 28, 1985, and the related consolidated statements of earnings, changes in financial position and shareholders' equity for each of the three fiscal years in the period ended January 3, 1987. Our examinations were made in accordance with generally accepted auditing standards and, accordingly, included such tests of the accounting records and such other auditing procedures as we considered necessary in the circumstances.

In our opinion, the consolidated financial statements referred to above present fairly the financial position of Safety-Kleen Corp. and Subsidiaries as of January 3, 1987, and December 28, 1985, and the results of their operations and the changes in their financial position for each of the three fiscal years in the period ended January 3, 1987, in conformity with generally accepted accounting principles which, except for the change (with which we concur) in fiscal 1985 in the method of accounting for investment tax credits as discussed in Note 1, were applied on a consistent basis.

Our examinations were made for the purpose of forming an opinion on the basic consolidated financial statements taken as a whole. The supplemental schedules I, V, VI, VIII, and X are presented for purposes of complying with the Securities and Exchange Commission's rules and are not part of the basic consolidated financial statements. The supplemental schedules have been subjected to the auditing procedures applied in the examinations of the basic consolidated financial statements and, in our opinion, fairly state in all material respects the financial data required to be set forth therein in relation to the basic consolidated financial statements taken as a whole.

ARTHUR ANDERSEN & Co.

Chicago, Illinois,
February 6, 1987.

Safety-Kleen Corp.'s Liability Insurance will be renewed on October 1, 1987. The Certificate of Liability Insurance will be forwarded to your office upon receipt.

Annual Report 1986

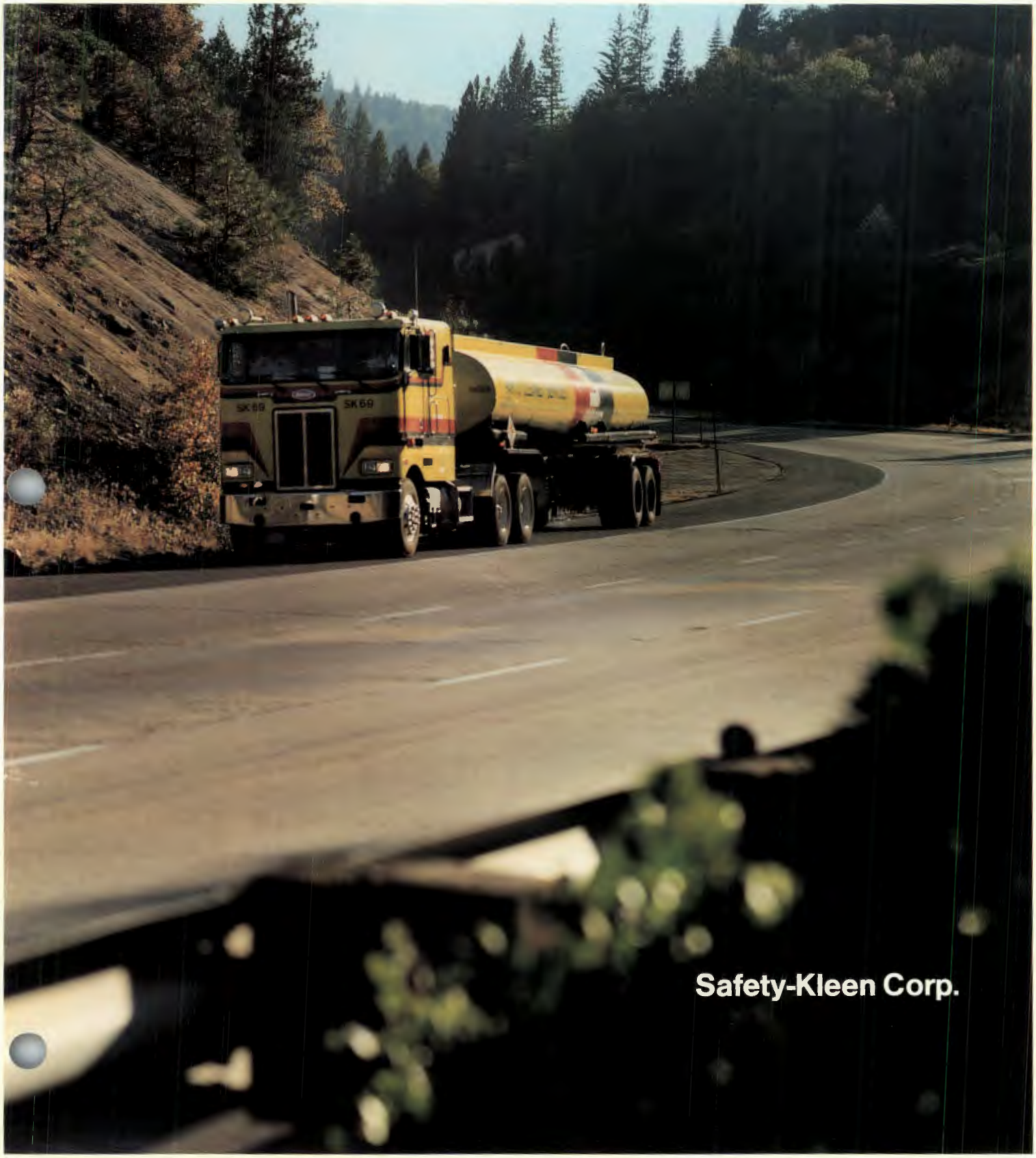

Safety-Kleen Corp.

Company Profile

In October 1968, Chicago Rawhide Manufacturing Company purchased Safety-Kleen, a small regional provider of parts cleaner services. The Milwaukee based company had tremendous potential, but until that purchase, had neither profit nor future. During the next six years, that potential was exploited and a healthy, rapidly growing Safety-Kleen was separated from Chicago Rawhide and reorganized into an independent company in 1974. Since that year, Safety-Kleen Corp. has continued to grow from total revenues of $29 million in 1974 to over $255 million in 1986. Today, the Company offers a variety of services to a large spectrum of businesses that include auto repair outlets, restaurants, dry cleaners and industrial plants.

The original, and still largest, Safety-Kleen service is its parts cleaner service. Considered by the Company to be its core business, this operation is concerned with providing the means for safe, convenient, economical cleaning of parts and components for the vehicular and industrial markets. As part of this service the Company provides equipment, solvent and certain allied products to its customers, while at the same time collecting spent solvent for transport to Company-owned recycle centers in a manner which meets environmental regulations.

Safety-Kleen is today the world's largest provider of parts cleaner services with Company-owned operations in the U.S., Canada and the United Kingdom, and licensed or joint venture operations in Australia, New Zealand, West Germany, France, Spain, Japan, Hawaii and Puerto Rico. In 1986, Safety-Kleen personnel performed over three million such services. In the process, more than 32 million gallons of spent solvent were recycled into 30 million gallons of reusable material.

In four newer service areas which utilize common facilities or systems, Safety-Kleen provides grease filters, cleaning equipment and related supplies to restaurants; offers materials and services to the automotive body repair and paint refinishing market; provides chlorinated and other cleaning solvents to larger industrial users, and reclaims those solvents for continued use; and collects filter cartridges and distillation residue from dry cleaners for recycling and solvent recovery while selling new filters and recycled dry cleaning solvent back to these businesses.

More information about the Company's activities begins on page 7, with "Distribution: Dedicated to Service and Responsibility."

Contents

Financial Highlights	1
Market and Dividend Information	1
History of Growth	2
Interim Results of Operations	3
Message to Shareholders	5
Distribution: Dedicated to Service and Responsibility	7
Financial Reports	29
Directors and Officers	46
Corporate Data	47

On the cover: *Safety-Kleen's fleet of vehicles link all facets of the distribution system together to form a "closed-loop" that is dedicated to service and responsibility.*

Financial Highlights

Fiscal Year Ended	January 3, 1987	December 28, 1985
Service revenues and sales	$255,356,000	$221,080,000
Earnings before cumulative effect of change in accounting principle	$28,254,000	$23,479,000
Percent of revenues and sales	11.1%	10.6%
Percent of beginning shareholders' equity	24.9%	26.3%
Net earnings	$ 28,254,000	$ 27,185,000[1]
Working capital	$ 41,988,000	$ 46,182,000
Total assets	$212,762,000	$176,885,000
Shareholders' equity	$137,445,000	$113,643,000
Number of common shares outstanding at year-end	32,433,518[2]	21,441,528
Current ratio	2.1 to 1	2.5 to 1
Number of Employees	3,300	2,898
Per Common Share[2]		
Net earnings	$.86	$.84[1]
Cash dividends	$.21	$.19

[1] 1985 net earnings include $3,706,000 ($.11 per share) for the cumulative effect of change in accounting for investment tax credits.

[2] All per share data has been restated for three-for-two stock splits on December 9, 1985 and March 5, 1987.

Market and Dividend Information

The Company's common stock is traded on the New York Stock Exchange. The approximate number of record holders of the Company's common stock at January 3, 1987 was 3,330.

The following table shows the range of common stock prices and cash dividends for the calendar quarters indicated. The quotations represent the high and low prices on the New York Stock Exchange as reported by The Wall Street Journal. All data has been restated for the December 9, 1985, and March 5, 1987 three-for-two stock splits, more fully described in Note 7 to the Consolidated Financial Statements.

Calendar Quarter Ended	1986 Prices High	1986 Prices Low	1986 Cash Dividends Paid	1985 Prices High	1985 Prices Low	1985 Cash Dividends Paid
March 31	$23.92	$17.17	$.053	$14.89	$10.78	$.044
June 30	25.83	22.17	.053	15.89	13.67	.045
September 30	25.50	19.00	.053	17.05	14.28	.045
December 31	23.67	18.59	.054	18.16	14.25	.053
			$.213			$.187

The Company has continuously paid quarterly cash dividends since March, 1979. The Company expects to continue its policy of paying regular cash dividends, although there is no assurance as to future dividends, as they are dependent upon future earnings, capital requirements, financial condition of the Company and other factors. The payment of dividends is subject to the restrictions described in Note 6 to the Consolidated Financial Statements.

History of Growth[1]

(Amounts, except per share amounts, expressed in thousands)

	Service Revenues and Sales	Earnings (loss) before extraordinary items and cumulative effect of change in accounting principle			Shareholders' Equity (end of year)	Return on Equity (beginning of year)
		Amount	Increase	Per Share		
1986	$255,356	$28,254	20.3%	$.86	$137,445	24.9%
1985	221,080	23,479[2]	20.9%	.73[2]	113,643	26.3%
1984	185,630	19,428	23.3%	.62	89,230	27.6%
1983	162,771	15,759	21.0%	.51	70,302	28.2%
1982	149,244	13,024	30.2%	.43	55,946	29.5%
1981	134,887	10,002[3]	26.5%	.33[3]	44,120	29.0%
1980	115,648	7,906	27.9%	.26	34,529	28.8%
1979	89,471	6,180	37.8%	.21	27,428	36.2%
1978	70,185	4,486	30.8%	.17	17,061	36.7%
1977	56,066	3,430	25.7%	.13	12,228	39.0%
1976	47,495	2,728	26.0%	.11	8,799	44.4%
1975	36,998	2,165	21.2%	.09	6,143	55.1%
1974	29,037	1,786	21.0%	.07	3,930	83.6%
1973	21,137	1,476	58.9%	.06	2,136	210.3%
1972	13,436	929	163.2%	.04	702	—[5]
1971	7,592	353	—[5]	.01	(232)	—[4]
1970	3,978	(219)	—[4]	(.01)	(536)	—[4]
1969	1,199	(400)	—[4]	(.02)	(318)	—[4]

[1]All data has been restated to reflect a three-for-two stock split on March 5, 1987.

[2]1985 earnings excludes $3,706,000 ($.11 per share) for the cumulative effect of change in accounting for investment tax credits.

[3]1981 earnings excludes $975,000 ($.03 per share) for U.S. income tax benefits resulting from the sale of the Company's West German subsidiary.

[4]Negative amount.

[5]Not measurable.

Service Revenues and Sales ($ Millions)

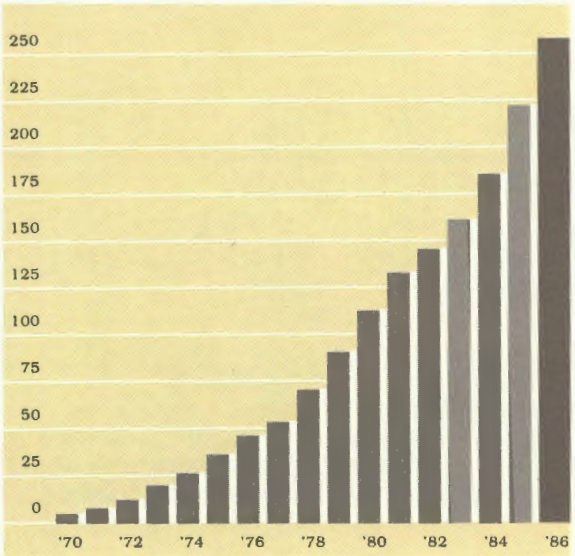

Earnings[2,3] ($ Millions)

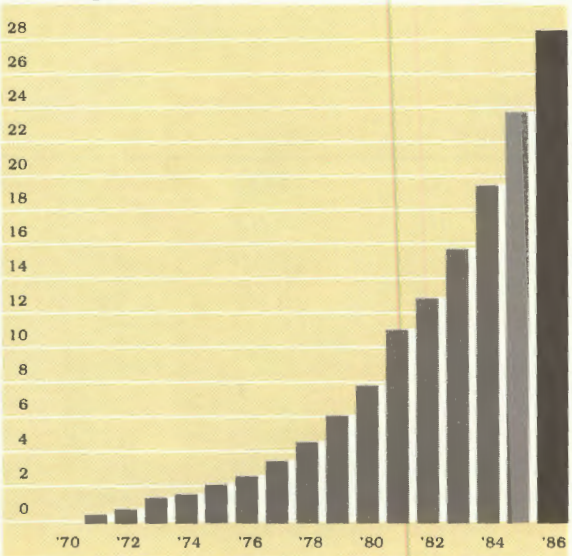

Interim Results of Operations (Unaudited)

(Expressed in thousands, except per share amounts)

Interim Period	Revenues and Sales 1986	Revenues and Sales 1985	Gross Profit 1986	Gross Profit 1985	Net Earnings 1986	Net Earnings 1985	Per Share[2] 1986	Per Share[2] 1985
First (12 weeks)	$ 54,357	$ 47,610	$18,538	$15,615	$ 5,640	$ 8,625[1]	$.17	$.27[1]
Second (12 weeks)	58,336	50,898	20,730	16,994	6,479	5,474	.20	.17
Third (12 weeks)	58,980	52,117	20,616	17,142	6,534	5,596	.20	.17
Fourth (17 weeks in 1986/ 16 weeks in 1985)	83,683	70,455	28,061	24,007	9,601[3]	7,490	.29	.23
Total	$255,356	$221,080	$87,945	$73,758	$28,254[3]	$27,185[1]	$.86	$.84[1]

[1]Includes net earnings of $3,706,000 or $.11 per share for the cumulative effect of change in accounting for investment tax credits as more fully described in Note 1 to the Consolidated Financial Statements.

[2]Restated for three-for-two stock split on March 5, 1987 and December 9, 1985, effected in the form of 50 percent stock dividends, as described in Note 7 to the Consolidated Financial Statements.

[3]As a result of the Tax Reform Act of 1986, net earnings for the final seventeen weeks of 1986 includes certain adjustments, which are described in Note 9 to the Consolidated Financial Statements.

Shareholders' Equity ($ Millions)

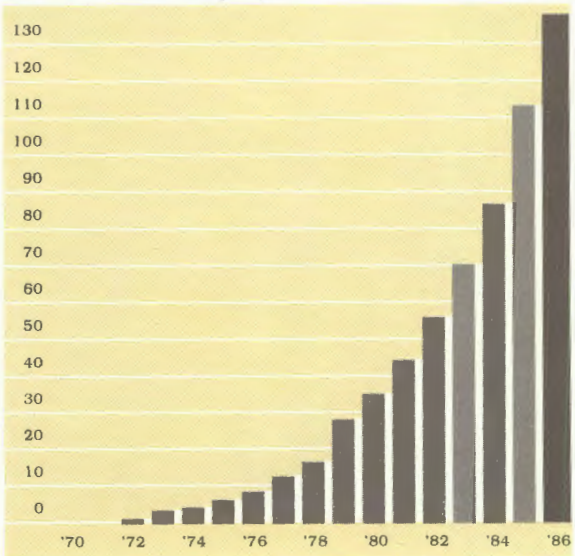

Total Assets ($ Millions)

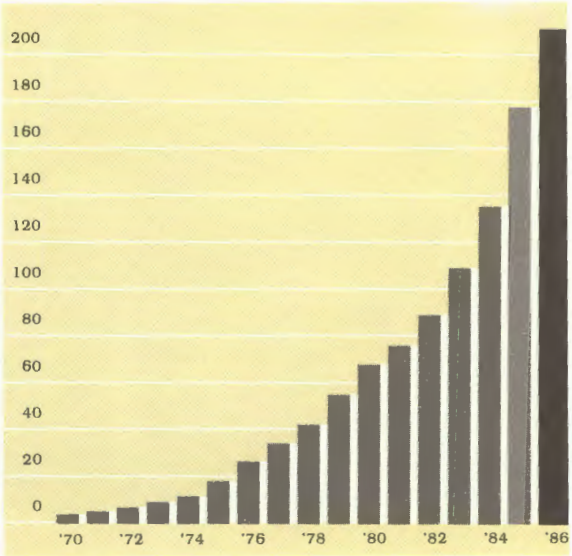

NO
SMOKING

Message to Shareholders

We are pleased to report that Safety-Kleen achieved record sales in 1986, and net earnings growth in excess of 20% for the sixteenth consecutive year.

Sales in 1986 were $255,356,000, an increase of $34,276,000 or 15.5% over year ago levels. Net earnings for the year were $28,254,000, an increase of 20.3% over 1985, before the cumulative effect of the change in accounting for investment tax credits in 1985. On this basis, earnings per share in 1986 were $.86 as compared to $.73 in 1985. The cumulative prior years' effect of the change in accounting for investment tax credits added $3,706,000 ($.11 per share) to 1985 net earnings. All per share amounts have been restated to reflect the three-for-two stock split issued March 5, 1987, to shareholders of record February 19, 1987.

Parts cleaner revenues and related allied product sales increased approximately 12% in 1986 and accounted for approximately 74% of consolidated revenues. The annualized number of parts cleaner services being performed at the end of 1986 was up by 5.1% from the start of the year. This represents an acceleration in the reported rate growth from the earlier interim periods of 1986. The great majority of this growth has been accomplished in the industrial sector of the parts cleaner market.

Revenues and sales in our newer service areas, primarily restaurant services, automotive paint refinishing services, dry cleaner services and the exchange and recycling of industrial solvents, totaled $65,310,000 in 1986. This represents an increase of 27% over 1985. Excluding revenues of the map distribution business, sold in October, 1985, revenues increased 32%.

The dry cleaner service, begun as a test market in 1984, has continued to expand rapidly. By the end of 1986, over 16,900 dry cleaners had subscribed to Safety-Kleen's service, up from 9,400 at the end of 1985.

New Opportunities. In last year's Annual Report, we discussed potential new opportunities for Safety-Kleen as a result of new regulations affecting small quantity generators of hazardous wastes. The dry cleaner service was the first new service developed as a result of these new regulations. We also noted that the Company was test marketing a service for auto body repair shops and car dealers. These businesses generate contaminated paint thinners from cleaning paint spray guns and waste paints.

The test market was successful and this service is now being rolled-out to Safety-Kleen branches nationwide. As part of the service, the customer is provided a machine designed to clean paint spray guns. During servicing, the machine is checked for proper operation, dirty solvent generated during the cleaning process is removed and clean solvent is supplied. We also provide a waste paint pick up service that compliments our machine service and thus affords our paint refinishing customers a complete hazardous waste removal service. Through a recycling process, usable gun cleaner solvent is generated from the dirty solvent and waste paint.

Russell A. Gwillim, Chairman of the Board (left), and Donald W. Brinckman, President and Chief Executive Officer.

We believe the Company will be able to develop additional services and products aimed at other groups of small quantity generators. We are currently studying a potential disposal service for industrial firms that generate a broader spectrum of liquid waste than Safety-Kleen has handled in the past. Among these wastes are industrial oils, coolants and flammable solvents.

We recently reached agreement in principle to acquire McKesson Envirosystems, a subsidiary of McKesson Corp. The company has solvent recycling plants in Illinois, Kentucky and Puerto Rico. This acquisition will enhance our Industrial Solvents business by adding additional recycling plants and sales people. In addition, McKesson Envirosystems has contracts with cement companies in St. Louis, Missouri and Puerto Rico whereby spent flammable solvents are used as fuel in cement kilns that are properly equipped to destroy any contaminants without creating air pollution. The company collects flammable solvents from its industrial customers for a fee. It then analyzes and processes the solvents to the extent necessary before burning. Having the capability to dispose of flammable solvents will provide additional opportunities for serving the liquid waste disposal needs of a much larger universe of small quantity generators. McKesson Envirosystems' current annual sales volume is approximately $14 million.

Throughout this year's Annual Report we discuss the importance of the distribution network which Safety-Kleen has developed. The additional capabilities provided by McKesson Envirosystems, coupled with Safety-Kleen's existing network of branches, accumulation and distribution centers, and recycling plants should place Safety-Kleen in a unique position.

We have also recently reached agreement to acquire an eighty percent interest in Breslube Enterprises. Breslube, headquartered in Breslau, Ontario, Canada, is the leading rerefiner of used lubricating oils in North America. In this business, used oils are collected from auto garages, car dealers and other businesses. The oil is taken to a plant where it is rerefined removing water, dirt and other contaminants. The oil is then sold as a quality lubricant.

In its latest fiscal year ended May 31, 1986, Breslube recorded sales of approximately $17 million (U.S.) and refined approximately twenty million gallons of used oil. It has a rerefining plant in Breslau and oil collection facilities throughout Southeastern Canada, the Northeastern U.S. and parts of the Midwest. In September, 1986, Safety-Kleen purchased an oil rerefining plant located in Shippensburg, Pennsylvania. The plant, acquired out of a bankruptcy proceeding, had never operated. As part of the Breslube acquisition, ownership of this plant will be transferred to Breslube.

Oil rerefining has been marginally profitable, if at all, in recent years. Used oil had alternate value as a fuel. Therefore, rerefiners had to buy the used oil. The selling price of the rerefined oil generally was not much more than the cost of the used oil plus the rerefining costs.

Environmental authorities have become concerned about air pollution created when used oils are burned since these oils can contain heavy metals and chlorinated solvents. Certain restrictions have been placed on burning of used oils and we believe that regulations are likely to become more stringent in the future. If they do, rerefining should become more profitable as alternate means of disposal of used oils are eliminated.

International Expansion. In 1985, Safety-Kleen entered into a joint venture in France. Two branches were established, one in Paris and one in Lyon, to test market the parts cleaner service. That test proved successful and the joint venture is in the process of establishing additional branches. Currently, four branches are in operation.

In 1986, the Company began a joint venture in Spain to develop the parts cleaner service in that country. Currently, three branches are in operation.

Stock Split. On February 6, 1987, the Board of Directors declared a three-for-two stock split which was issued to shareholders on March 5, 1987, in the form of a 50% stock dividend. The Directors also declared a regular quarterly cash dividend of six cents per share, on the post-split shares, payable April 2, 1987 to shareholders of record March 19, 1987. The stock split was the Company's fifth since the initial public offering in April, 1979, following a two-for-one split in November, 1980, and three-for-two splits in December, 1982, December, 1984 and December, 1985. The cash dividend represents a 12.5% increase in the payout. The Company previously paid eight cents per share on the pre-split shares. This was the seventh dividend increase since the initial public offering.

Outlook. Our established long-range goals are to achieve average growth of 15% to 20% per year in revenues and 20% to 25% in net earnings over the next five years. Our sales and earnings growth in 1986 met these objectives. Our 1986 earnings growth tied a record that only two other American companies have ever achieved. Our research of data on all industrial companies who file reports with the Securities and Exchange Commission (some 6,500 companies) indicates that only Safety-Kleen, Automatic Data Processing, Inc. and McDonald's Corporation have ever recorded sixteen consecutive years of net earnings growth of 20% or more per year (excluding extraordinary items and the cumulative effect of changes in accounting principles). No company, however, has ever reported seventeen consecutive years of earnings growth in excess of 20%. We believe that Safety-Kleen has an excellent chance of setting such an all-time American record in 1987.

One of the key ingredients to Safety-Kleen's success is its integrated distribution system encompassing branches, solvent recycle centers, distribution and accumulation centers and manufacturing facilities. We invite you to read the following section entitled "Distribution: Dedicated to Service and Responsibility" to learn more about why we feel that Safety-Kleen has a truly unique distribution organization.

We wish to thank our customers, shareholders, employees and suppliers for their confidence in and support of our Company. We are especially pleased that we are able to fulfill our responsibilities to each of these groups and, at the same time, help preserve our environment through our unique distribution, recycling and resource recovery system.

Russell A. Gwillim
Chairman of the Board

Donald W. Brinckman
President and Chief Executive Officer

Distribution: Dedicated to Service and Responsibility

All companies utilize a distribution system of one sort or another. Products are transported to warehouses, or to one or more wholesale and retail levels for ultimate movement to, and use by, the customer. The economy of operation and efficiency of these systems are vital to the profitability of these firms and the degree to which they satisfy and retain customers. Most businesses, however, must be content with channels of distribution traditional to their products or services; channels which are frequently beyond their full control. This is not the case at Safety-Kleen.

Safety-Kleen's distribution system has grown and evolved over the years as its business base has broadened and increased. More importantly however, the distribution system has adapted to the challenges and opportunities associated with the complex and ever changing environmental laws and regulations.

To the Customer . . . and Back

The difference between success and failure in virtually every business venture depends, to a significant degree, on two things: what needed product or service can the business provide to potential customers; and after the sale, how well can the business continue to deliver that product or service to the customer's satisfaction.

In 1968, as plans were being finalized to take the Safety-Kleen parts cleaner service nationwide, the Company knew that it had a service that people wanted. The service charge to the customer was relatively small and the customer valued the convenience of always having a properly maintained parts cleaner when he needed it, without the attendant inconvenience of cleaning it and getting rid of the dirty solvent.

A key question had to be answered: should the Company attempt to develop the parts cleaner service nationwide through independent distributors, or should it establish its own service organization? Using distributors would certainly result in far less start-up costs, but management would have very little control over the quality of service delivered to the customer. It was quickly decided that greatest customer satisfaction would result from the Company owning and controlling its own distribution system, and being fully responsible for delivering its service and products. That philosophy hasn't changed.

Built into the plan to introduce the Company's service nationwide was the phased establishment of 130 branches. From these branches, each day, sales and service representatives would make their daily, prescheduled sales calls using vehicles suitable for the task.

In 1970 Safety-Kleen built its first recycle center and the unique closed-loop system came into being. Solvent delivered to customers as part of the service was returned to the branch after use where it was accumulated and sent to the recycle center for reclamation and shipment back to the branch. The cycle would start again when the customer was next serviced. Along with the branches, Safety-Kleen's recycle centers have become a key part of the distribution system.

Safety-Kleen's unique "closed-loop" concept of distribution—to the customer, back to the Company for recovery, and back again to the customer for reuse—is evident wherever the Company operates. There are Company-owned operations in the U.S., Canada and the United Kingdom; licensed operations in Australia, New Zealand, West Germany, Hawaii, Puerto Rico and Japan; and joint venture operations in France and Spain.

As the Company's business expanded and grew, distribution centers were added beginning in 1982. Prior to this, materials and products had to be shipped in less-than-truckload quantities, from outside suppliers and the Company's New Berlin, Wisconsin plant, to each of the branches. Truckload quantities of a given product are now shipped directly to distribution centers. The distribution centers service the branches on a regular schedule. Most distribution centers have facilities for cleaning buffing pads used in paint refinishing services, reducing turnaround time on pads and substantially reducing the quantities of pads required at the branch level.

With reauthorization of the Resource Conservation and Recovery Act in 1984, changes were made to regulate small quantity generators of hazardous wastes for the first time. These changes brought new opportunities for Safety-Kleen to service a broader customer base. The first such new opportunity developed by the Company was the waste disposal service for dry cleaners. Other new services have been added and more are anticipated.

In the parts cleaner service, waste solvents are transported in tanker trucks from branches to recycle centers. Given the nature of the wastes collected from dry cleaners, they must be moved in drums all the way from customer locations to the branches and eventually the recycle centers. Other new services are likely to require movement of large quantities of drums from branches to recycle centers. As a result of this, it would not be feasible to accumulate full truckload quantities of drums at each branch before being shipped to the recycle center.

Thus, in 1985, Safety-Kleen began to establish a third tier of distribution: the accumulation center. The primary purpose of the accumulation center is to accumulate drums of hazardous waste solvents from the branches it serves, for economical truckload shipments to the Company's recycle plants. Accumulation centers also function as distribution points for branches, providing additional shipping economies and efficiencies. Additionally, bales of used restaurant filters and dirty buffing pads are accumulated at these centers before they are shipped for processing.

Safety-Kleen's logistic network in the United States consists of seven solvent recycle centers, six distribution centers, 12 of 25 planned accumulation centers, and 162 sales and service branches. Linking all these entities together is a fleet of 61 tanker trailer trucks moving solvent to and from branches: 58 dry cargo trailers that operate between distribution and accumulation centers; 24 local delivery trucks that supply branches out of the accumulation centers; and over 1,750 route service trucks that are used daily by Safety-Kleen's sales and service representatives.

safety-kleen
CA 989
safety-kleen
safety-kleen

Serving the Customer

Safety-Kleen's strength has been its ability to identify and perform tasks for its customers that are necessary, sometimes unpleasant, and frequently not relevant to the customer's primary business. For example: parts of a vehicle or a piece of industrial equipment requiring repair must be examined. To be examined, they must first be cleaned —a nasty job made easier in a Safety-Kleen parts cleaner, and made easier still because Safety-Kleen maintains the parts cleaner and replaces the dirty solvent. Restaurants are in the business of preparing and serving food, not changing filthy grease filters. Safety-Kleen does those things. The single most important product in use by American dry cleaners is a solvent that becomes a hazardous waste after it's been used, filtered and distilled. The filters and still bottoms can no longer be thrown in the dumpster out back. Safety-Kleen takes care of them.

Doing these tasks and all they entail require a high level of logistical support which can come only from a fully controlled distribution system that supplies service materials and allied products and removes waste and recyclables in an economical and timely manner. A description of these tasks, Safety-Kleen's services, follows.

All five Company services depend on the tightly controlled distribution system that supplies service materials and allied products, and removes waste and recyclables in an economical and timely manner. This concept is most visible at the branch level where every day, over 1,600 Safety-Kleen reps worldwide make their sales and service calls to the Company's diverse customer base.

CHRIPPELL FINANC

Parts Cleaner Service—In autumn 1968, Safety-Kleen began operation with a parts cleaner service in the Midwest. The concept was to offer customers a convenient, safe, economical way to clean greasy, dirty parts. Previously, parts had been cleaned for the most part using a bucket of gasoline and a brush. This method was obviously not convenient, safe or environmentally satisfactory. Safety-Kleen's approach to this problem was to offer the use of a parts cleaner machine for the task, fresh solvent, and a solvent disposal service that would greatly simplify this messy, annoying task.

Even before the new Safety-Kleen service was available nationally, however, the Company decided to recycle the spent or dirty solvent, and the closed-loop distribution system was formed. Safety-Kleen would deliver fresh solvent to the customer, and through the distribution network, would return the spent solvent for recycling. After processing, it would be used again by the Company's customers. Today, this basic service remains the same.

In the Company's COMS (Customer Owned Machine Service) program, Safety-Kleen provides services to those who own their own machines. The Company provides these customers essentially the same services—fresh

Safety-Kleen's original service, and still the largest, is a parts cleaner service to automotive repair facilities and industrial firms who need to clean or degrease metal parts. Customers rely on the Company's fine-tuned logistical support for on-time service and the benefits it offers for them and the environment.

To clean and degrease metal parts, the Company provides a parts cleaner machine and petroleum-based solvent for the customer's use.

During each service call, the Safety-Kleen rep provides clean solvent, maintains the parts cleaner, and removes the dirty solvent.

SAFETY KLEEN
NO
OKING

solvent, machine cleaning, removal of the dirty solvent, and proper disposal of the dirty solvent through recycling.

The Immersion Cleaner Service provides a special parts cleaner consisting of a sealed drum containing an air powered agitating parts basket. Parts to be cleaned, such as carburetors and auto transmission parts, are placed in the basket, to remove heavy concentrations of gum and varnish. The spent solvent used in this process is also removed from the customers' premises for recycling.

In 1986, Safety-Kleen entered into a marketing agreement with Bearings, Inc., one of the nation's largest bearing distributors. Under the agreement, Bearings, Inc., will market Safety-Kleen's parts cleaner services and COMS. For the customer who prefers to own his parts cleaner, BI will sell a recently expanded line of Safety-Kleen parts cleaners and offer COMS service. All servicing of parts cleaners is done by Safety-Kleen branches with the Company taking full responsibility for meeting customer servicing needs and state and federal EPA requirements. This agreement should enable the Company to penetrate industrial market for parts cleaners faster than it could its own.

Safety-Kleen recently added two larger parts cleaners to the Company's service, specifically to meet the needs of industrial customers for larger capacity machines. The industrial segment of the parts cleaner service is becoming increasingly more important to Safety-Kleen, and is expected to significantly increase the customer base for this service in the years ahead.

In 1986, Safety-Kleen entered into a marketing agreement with Bearings, Inc., which sells an expanded line of Safety-Kleen parts cleaners to its industrial customers. In addition, BI markets the Company's COMS (Customer Owned Machine Service) to these customers, with Safety-Kleen's reps performing the usual COMS service.

r many customer calls each day, selling products and servicing parts cleaners, the rep returns to the branch where collected dirty solvent enters the distribution system for recovery and reuse.

safety-kleen
SK-8299R

Paint Refinishing—Independent auto body shops, automobile dealerships, auto manufacturing plants, fiberglass boat manufacturers, marble products companies, and other firms that require a polished finish on their products, are sources of business for Safety-Kleen's paint refinishing service.

This service supplies clean buffing pads to these businesses at regular intervals. Dirty pads are accumulated at the branch, and returned to a Safety-Kleen facility, usually a distribution center, where they are cleaned, graded for wear, and returned for additional customer use.

Another part of this service, introduced in 1985, is the Abrasive Blaster service. It is used primarily by auto body shops to remove old paint and rust from corners and other hard to reach metal surfaces.

The Company's newest service to the paint refinishing market includes a spray gun cleaner unit and a waste paint disposal service. A specially engineered machine, designed to assist bodyshop personnel clean dirty paint spray guns, is provided as part of the program. During servicing, this machine is checked for proper operation, dirty solvent generated by the cleaning process is removed, and clean solvent is supplied. The dirty solvent is taken to the local Safety-Kleen branch where it enters the distribution system to be recycled and returned for further use. The optional waste paint disposal service provides proper containers, labeling and disposal of waste paint generated by paint shops. The solvent contained in this paint is recovered and used again.

The Company's in-place distribution system paved the way for introducing a spray gun cleaner and waste paint disposal service for auto body paint shops in 1986. Safety-Kleen provides these shops with a cleaning machine, fresh cleaning solvent, removal of dirty solvent which is a hazardous waste, and recovery of this solvent for further use. The optional waste paint disposal service includes proper containers, labels and solvent recovery from the paint waste.

The Abrasive Blaster, used by auto body shops to remove old paint and rust from corners and other hard to reach metal surfaces, is another Safety-Kleen service to the paint refinishing market.

Safety-Kleen's wool buffing pad service is used by automobile dealers, body shops, marble product firms and auto manufacturers. The Company's paint refinishing specialist supplies clean pads for customer use, and returns dirty pads through the distribution system for cleaning, inspection and further customer use.

SATURDAY
Pilgrim
safety-kleen

Dry Cleaner Service—The 1984 amendments to the Resource Conservation and Recovery Act regulated small quantity generators of hazardous wastes for the first time. Dry cleaners were affected by these amendments since, during the dry cleaning process, they generate filter cartridges and sludge contaminated with waste solvents.

Early in 1984, Safety-Kleen began testing a possible service to this market, and was ready to help the nation's dry cleaners satisfy the new requirements for proper disposal. In this service, Safety-Kleen's representatives call upon dry cleaner customers at regular intervals. The rep removes the dirty filter cartridges and sludge and returns them to the local branch. There, they enter the distribution network to be sent to a recycle center for processing and recovery of usable material. Safety-Kleen also sells new filter cartridges and recycled perchloroethylene solvent for use in the cleaning process.

By the end of 1986, over 16,900 dry cleaners in the U.S. and Canada had subscribed to Safety-Kleen's dry cleaner service.

Small quantity generators of hazardous waste such as dry cleaners are required to properly dispose of the waste created during the cleaning process. Safety-Kleen's dry cleaner program was introduced in 1984, and at the end of 1986, over 16,900 dry cleaners in the U.S. and Canada had subscribed to this environmentally necessary program.

In addition to removing the dry cleaner's dirty filters and residue, Safety-Kleen also sells specially designed filters and dry cleaning solvent to the Company's customers.

Dry cleaning solvent filters collect dirt and other residue, along with cleaning fluid. As part of the Company's service, Safety-Kleen reps collect these filters and help complete the necessary manifests. They are then transported to the recycle center where the solvent is recovered and recycled.

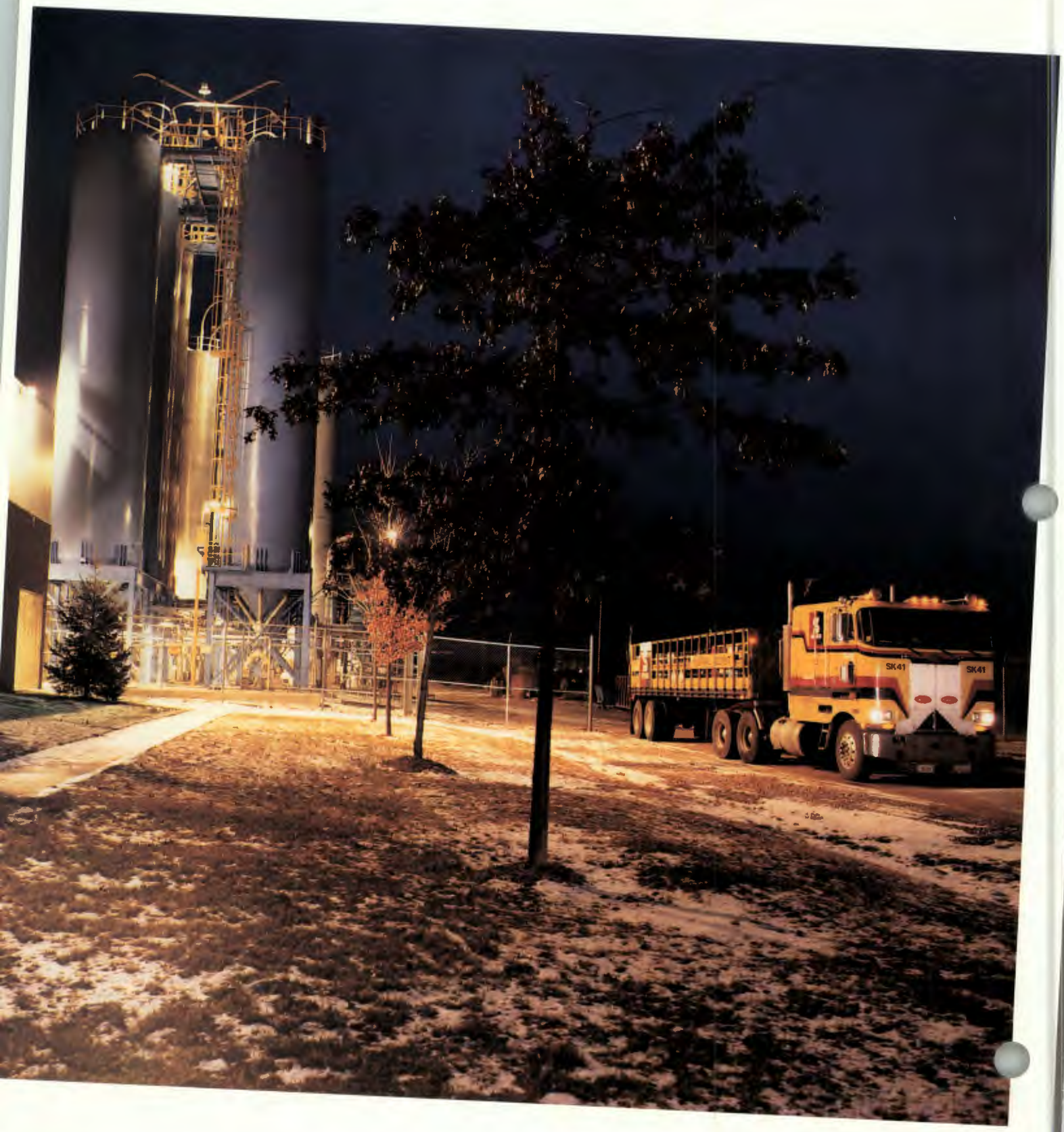
SK41
SK41

Industrial Solvents—Safety-Kleen's service to large or bulk users of industrial cleaning solvents is a result of its many years of experience in collecting parts cleaner solvent, recycling the material, and returning it to use.

This service concentrates on firms engaged in metalworking, electronics, aeronautics and tool-and-die manufacturing. In the course of this work, bulk quantities of chlorinated, fluorinated and other cleaning solvents are used. Typically, these solvents remove grease and dirt prior to assembly or coating. Safety-Kleen's trained industrial sales engineers call on these firms, and help them identify hazardous materials required to be disposed of in accordance with current EPA regulations. They also train customers in segregating solvent streams to enable them to maximize recovery levels.

The sales engineer arranges for the removal of the customer's waste for recycling through the Company's distribution system, and sells virgin and recycled solvents in any quantity—from a single drum to a tanker load.

Late in 1986, Safety-Kleen acquired Phillips Manufacturing Company, a Chicago-based manufacturer of industrial degreasing and solvent recovery equipment. Phillips and Safety-Kleen's industrial sales engineers will together be able to offer industrial firms a complete package of equipment plus solvent service to satisfy the spectrum of industrial cleaning and degreasing needs.

Safety-Kleen's industrial solvents program serves firms engaged in metalworking, electronics, aeronautics and tool-and-die manufacturing who use large quantities of cleaning solvents in their fabrication processes.

Large quantities of chlorinated, flourinated and other cleaning solvents generated must be properly disposed of. The Company arranges for the removal and processing of these solvents through the distribution system.

Solvent is analyzed at the recycle centers to identify content and assure compatibility with the Company's recovery processes.

Restaurant Services—Safety-Kleen's service offered to restaurants in the United States again relies on the distribution system that the Company has in place to serve the entire branch network. Logistically supported by this network, Restaurant Services has grown throughout the country by doing small tasks that are not relevant to the primary purpose of preparing and serving food.

Safety-Kleen reps provide restaurant and other food preparation institutions with a specially-designed filter that is mounted in the hood of the kitchen exhaust system. This filter, called the Fire-Shield™ aluminum grease filter removes grease from the airstream over the cooking area, and drains it off to a collection cup—thus preventing its deposit in the ductwork of the exhaust system where it could fuel a fire.

The Company's Soaking Center, consisting of a large tank filled with a special aquaeous solvent, is another service for restaurants. It is designed for soaking kitchen pots, pans and racks, to remove encrusted or greasy buildup.

In a typical service call, the Safety-Kleen rep installs new Fire-Shield™ aluminum grease filters, and takes the old, dirty filters to the branch. He may, at the same time, clean and add fresh solution to the Soaking Center. Used filters are compacted and bailed at the branch, picked up by the Company's distribution vehicle, and taken to the area's distribution center. There, these filters are stored until a sufficient quantity is collected. They are then sold to an aluminum smelter for conversion and use again in other aluminum products.

By the end of 1986, the Company was providing restaurant services to approximately 34,000 customers.

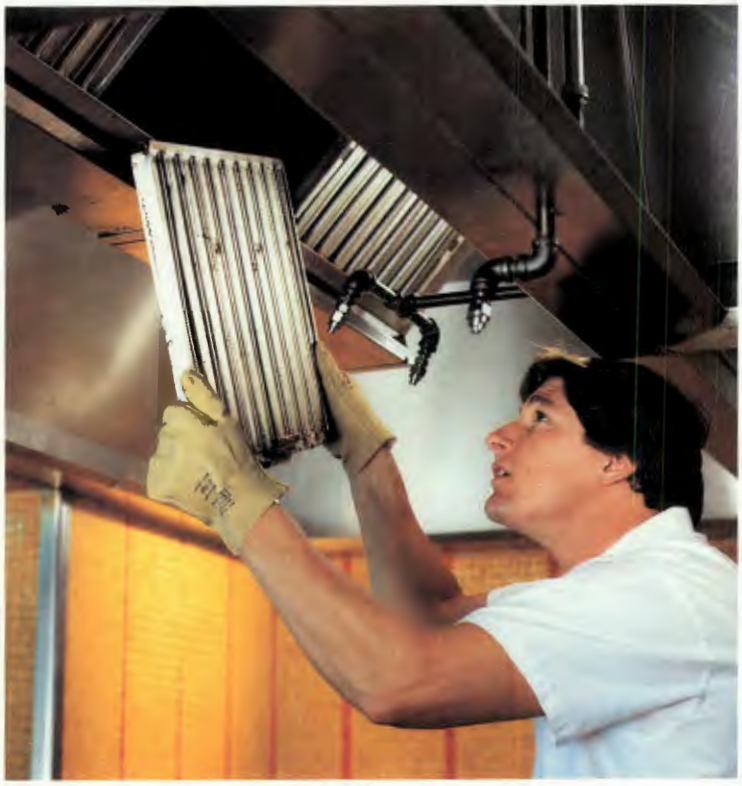

The Company's restaurant services program relies heavily on the distribution system that Safety-Kleen has in place to serve the entire branch network. In 1986, the Company was providing services to approximately 34,000 restaurant customers in the U.S.

Aluminum Fire-Shield™ grease filters are installed during periodic service calls. These filters are manufactured by the Company's New Berlin, Wisconsin plant. After use, they are compacted, transported to distribution centers, and then sold to aluminum smelters for use in other products.

The Soaking Center uses a special aquaeous solution to remove heavily encrusted material and grease from pots and other kitchenware. The Safety-Kleen rep also sells a variety of allied products to help maintain kitchen cleanliness.

Closing the Cycle

The 1968 plan, laying out the development of Safety-Kleen accross the U.S., anticipated eventually having some 130 representatives serving approximately 50,000 customers. Today the Company has 241 branches worldwide, with an equivalent number of managers and over 1,600 sales representatives. In addition, Safety-Kleen offers five distinct services along with a variety of allied products targeted to hundreds of thousands of customers.

These statistics underscore the need for an efficient distribution network—one that is tightly controlled but able to respond quickly to rapidly changing conditions. Safety-Kleen's distribution network is such an organization—dedicated to serving the customer, and helping him and the Company fulfill the environmental responsibilities that are beneficial to everyone.

Since 1970, when Safety-Kleen opened its first solvent recycle center, it has been in the forefront of resource recovery. Every day, Safety-Kleen's fleet of tanker trucks is on the road between the seven recycle centers and the branches they serve, delivering fresh solvent for use in performing customer services, and picking up spent solvent for return to the recycle centers for recovery.

To some, used solvents are a waste. To the Company, they are valuable raw materials to be recycled and used again and again. These reclaimed solvents supply approximately two-thirds of the solvent used in the Company's parts cleaner service. In 1986, Safety-Kleen reclaimed

Safety-Kleen's six distribution centers inventory both service materials and allied products. These centers are located in Edgewater Park, New Jersey, Heath, Ohio, Lexington, South Carolina, New Berlin, Wisconsin, Oklahoma City, Oklahoma, and Pomona, California.

Accumulation centers have been established as two-way, intermediate collection and distribution points between branches and the recycle and distribution centers. At the end of 1986, 12 out of 25 planned accumulation centers were in operation.

The heart of solvent reclamation is Safety-Kleen's seven domestic recycle centers that process liquid cleaning waste generated by both large and small quantity generators of hazardous waste. These centers are located in Clayton, New Jersey; Lexington, South Carolina; Hebron, Ohio; Chicago and Elgin, Illinois; Denton, Texas; and Reedley, California.

PARTS CLEANER SERVICE

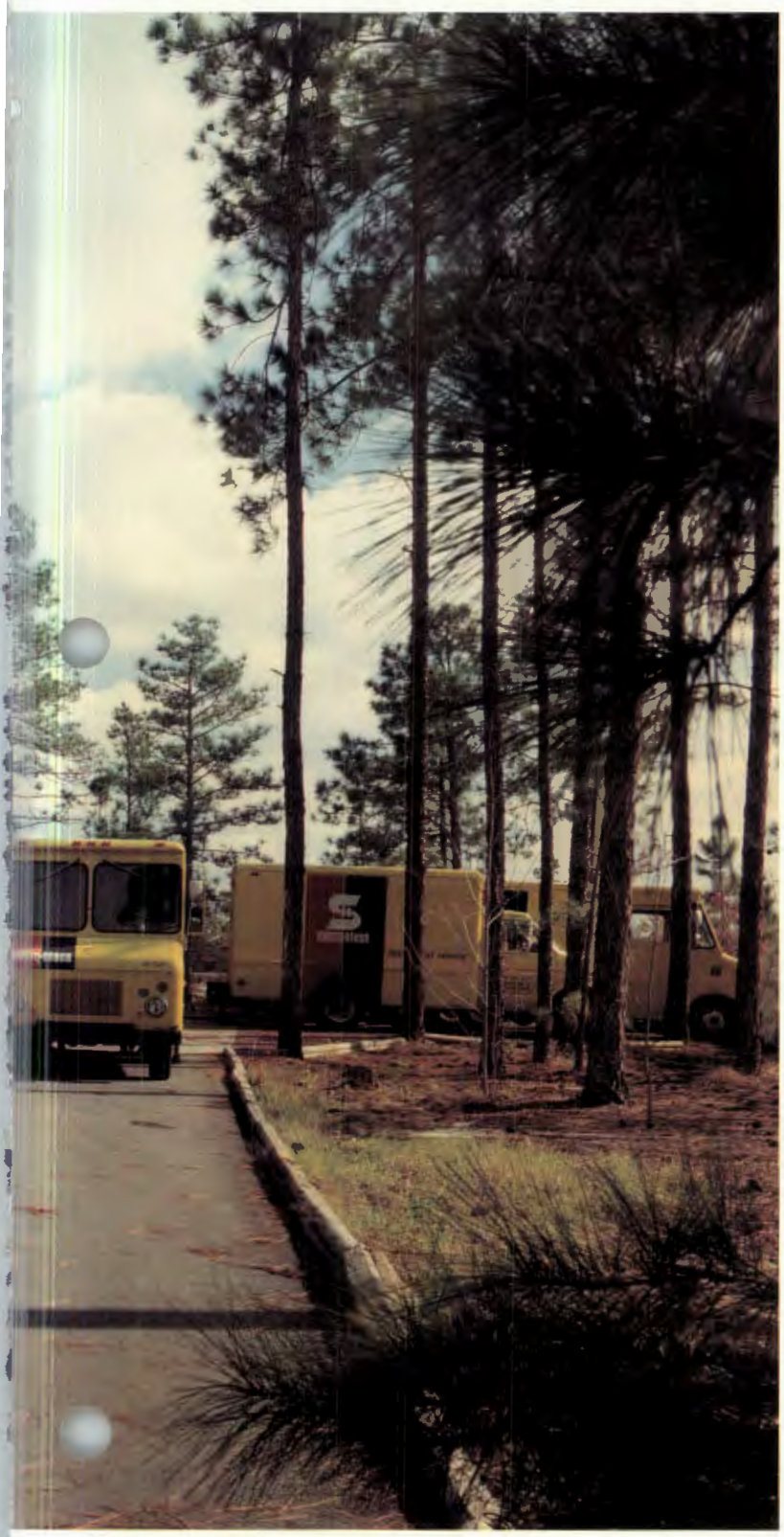

some 30 million gallons of usable solvent and other petroleum by-products from the 32 million gallons of spent solvent entering the recycle process.

The Company's distribution centers keep the branches supplied with products for resale. Aluminum Fire-Shield™ grease filters and wool buffing pads, manufactured at the Company's plant in New Berlin, Wisconsin, and used in the restaurant and paint refinishing services, are examples of the necessary service materials that are stocked at the distribution centers. Allied products, such as hand cleaners, soaps, aerosol cleaners and various other products sold to customers during service calls, are also an important part of the distribution centers' inventories.

The recently established accumulation centers serve primarily as intermediate accumulation points for drums of clean and waste materials used in Safety-Kleen's services. Additionally, they are product distribution points for specifically assigned branches. Distribution centers regularly deliver material and products destined for branches to the appropriate accumulation centers, and return with the accumulated drums and skids of waste material for further processing. In turn, the accumulation centers transport the pre-packed products and material to branches, returning with the branches' collected waste material for centralized accumulation. This new tier in Safety-Kleen's distribution system adds even greater economy, efficiency and responsiveness to the Company's overall distribution network.

Through the Company's distribution network, operated and controlled solely by Safety-Kleen, those customers who are classified as generators of hazardous waste can be assured that their wastes are being handled and disposed of by the best method available—through resource recovery.

Safety-Kleen's distribution concept is part of a closed-loop cycle which sees solvents flowing to customers and back through the system to Safety-Kleen for recycling—and movement back again to customers. It is a dedicated operation: dedicated to serving the Company's customers with quality services and products, and dedicated to responsible action to help protect the environment.

Safety-Kleen's "closed-loop" distribution system is safe, efficient and economical. Solvents, material and allied products flow through the branch, to customers, and back again for recovery, recycling and reuse.

Dedicated to Service and Responsibility

In 1986, Safety-Kleen again posted record sales for the eighteenth straight year, and record earnings gains in excess of 20 percent for the sixteenth consecutive year, tying the all-time American business record achieved by only two other companies a number of years ago.

This past year was also a year of challenges for Safety-Kleen and its customers, with the Federal EPA's final regulations becoming effective as required by the congressional reauthorization of the Resource Conservation and Recovery Act of 1984. Small quantity generators are required to follow specific procedures in disposing of their hazardous wastes. The Company, through its extensive branch network, its accumulation centers and highly specialized customer services, responded to the challenges.

Important new additions to Safety-Kleen's coverage of its markets made their appearance in 1986. In the Parts Cleaner Service, the marketing agreement with Bearings, Inc. to sell Safety-Kleen parts cleaners to industrial customers, and market the Company's solvent service to these customers, is anticipated to have a positive effect by further increasing the Company's share of the industrial parts cleaner market. In the Paint Refinishing Service, the addition of a service to clean paint spray guns, recycle the solvent used in this cleaning process, and assist auto body shops by removing their waste paint for solvent recovery, is expected to prove quite beneficial to the user in complying with environmental regulations—and to the Company's growth in the years ahead.

The Company's consistent growth would not be possible without a far-reaching and finely-tuned distribution organization that meets the changes posed by the Company's markets and environmental requirements. As a result, Safety-Kleen's distribution organization accurately mirrors the goals of the Company. It is truly dedicated to *service and responsibility*.

Financial Reports

Contents

Selected Financial Data	29
Management's Discussion and Analysis of Financial Condition and Results of Operations	30
Report of Independent Public Accountants Consolidated Statements of Earnings	33
Consolidated Statements of Shareholders' Equity	34
Consolidated Balance Sheets	35
Consolidated Statements of Changes in Financial Position	36
Notes to Consolidated Financial Statements	37

Selected Financial Data

(Expressed in thousands, except per share amounts)

					Fiscal Year[1]
	1986[3]	1985	1984	1983	1982
Income Statement Data					
Service revenues and sales	$255,356	$221,080	$185,630	$162,771	$149,244
Net earnings	28,254	27,185[2]	19,428	15,759	13,024
Earnings per share	.86	.84[2]	.62	.51	.43
Cash dividends per share	.213	.187	.133	.089	.067
Balance Sheet Data					
Current assets	79,085	77,047	63,493	58,214	46,695
Current liabilities	37,097	30,865	26,572	20,714	18,349
Working capital	41,988	46,182	36,921	37,500	28,346
Total assets	212,762	176,885	140,537	109,548	91,451
Long-term debt	9,900	11,700	7,103	8,023	9,000
Shareholders' equity	137,445	113,643	89,230	70,302	55,946

[1]The above data has been restated to reflect three-for-two stock splits on December 6, 1982, December 10, 1984, December 9, 1985 and March 5, 1987, more fully described in Note 7 to the Consolidated Financial Statements.

[2]1985 net earnings include $3,706,000 ($.11 per share) for the cumulative effect of a change in accounting for investment tax credits as more fully described in Note 1 to the Consolidated Financial Statements.

[3]Fiscal year 1986 has fifty-three weeks, all other fiscal years presented have fifty-two weeks.

Management's Discussion and Analysis of Financial Condition and Results of Operations

Summary

The following table sets forth for the periods indicated (i) percentages which certain items reflected in the financial data bear to consolidated revenues and sales of the Company and (ii) the percentage increase of such items as compared to the indicated prior period:

	Relationship to Consolidated Revenues and Sales Fiscal Years			Period to Period Increase (Decrease) Fiscal Years	
	1986*	1985	1984	1985-86*	1984-85
Revenues and Sales					
Service revenues	85.8%	84.2%	83.5%	17.7%	20.0%
Sales (primarily allied products)	14.2	15.8	16.5	3.9	14.5
	100.0	100.0	100.0	15.5	19.1
Costs and Expenses					
Branch operating costs and expenses and cost of sales	65.6	66.6	66.9	13.6	18.6
Selling and administrative expenses	16.3	15.5	15.9	21.3	16.1
Interest, net	(1.6)	(.8)	(1.7)	117.2	(41.1)
	80.3	81.3	81.1	14.0	19.4
Earnings Before Income Taxes and Cumulative Effect of Change in Accounting Principle	19.7	18.7	18.9	22.0	17.9
Income Taxes	8.6	8.1	8.4	24.2	14.2
Earnings Before Cumulative Effect of Change in Accounting Principle	11.1	10.6	10.5	20.3	20.9
Cumulative Effect of Change in Accounting for Investment Tax Credits	–	1.7	–	N/A	N/A
Net Earnings	11.1%	12.3%	10.5%	3.9	39.9

*1986 is a fifty-three week fiscal year.

Trends

During the five fiscal years ended January 3, 1987, the Company's revenues and earnings grew at compounded rates of 13.6 percent and 20.8 percent, respectively. This was largely attributable to growth in service revenue in the Company's parts cleaner, restaurant, paint refinishing, dry cleaner and industrial solvents services, as well as allied product sales growth in the parts cleaner and paint refinishing markets.

Inflation and Changes in Prices

The Company uses a substantial volume of petroleum-based solvents in its parts cleaner service. The cost of solvents rose significantly from 1974 through 1980. In 1981, price increases moderated and prices declined in subsequent years. Approximately two-thirds of the Company's solvent requirements are met by recycling, leaving one-third to be purchased.

Throughout this time period the Company has been able to raise prices in its parts cleaner service. Management expects to be able to raise prices in the future to compensate for cost increases.

Liquidity and Capital Resources

The Company's working capital declined from $46,182,000 at December 28, 1985 to $41,988,000 at January 3, 1987.

Capital additions in 1986 totaled $50 million. Commitments for capital expenditures as of January 3, 1987 were approximately $3 million.

In December, 1986, the Company contributed $6.3 million to a Voluntary Employee Beneficiary Association (VEBA) trust fund as discussed in Note 8 to the Consolidated Financial Statements appearing on page 41. The VEBA trust fund balance of $7,412,000 at the end of 1986 is included in prepaid expenses in the January 3, 1987 Consolidated Balance Sheet. These funds are expected to be paid out during 1987 for covered employee benefits.

As a result of the Tax Reform Act of 1986, the Company anticipates lower cash flow in 1987 and higher cash flow in 1988 and future years. These projections take into account (among other factors) the Company's projected earnings, capital spending, the scheduled decline in statutory Federal income tax rates and elimination of the investment tax credit. The Company believes any changes in cash flows as a result of the Act will not materially affect liquidity.

The Company expects to be able to finance growth in its existing service areas through internally generated funds for the foreseeable future.

Results of Operations

Revenues and Sales. Total service revenues and sales derived from the Company's parts cleaner service amounted to $190,046,000 in 1986, $169,782,000 in 1985 and $155,127,000 in 1984. Total service revenues and sales derived from the newer service areas, primarily restaurant services, automotive paint refinishing services, dry cleaner services and the exchange and recycling of industrial solvents amounted to $65,310,000 in 1986, $51,298,000 (including revenues of Custom Organics, Inc., acquired on August 6, 1985) in 1985 and $30,503,000 in 1984.

Service revenues and sales from the Company's parts cleaner service increased $20,264,000 or twelve percent in 1986 over 1985. Of this increase, ninety-six percent was derived from service revenues while four percent was due to growth in allied product sales. Parts cleaners in service increased 5.0 percent in 1986. In addition, the average time interval between services shortened slightly from the end of 1985 to the end of 1986. The combination of more machines in service and the shorter average service interval resulted in 5.8 percent additional services performed in 1986 over 1985. The average price per service in 1986 was 6.7 percent higher than in 1985. Service revenues and sales from the Company's parts cleaner service increased $14,655,000 or nine percent in 1985 over 1984. Of this increase, ninety-three percent was derived from service revenues while seven percent was due to growth in allied product sales. Parts cleaners in service increased 4.4 percent in 1985. In addition, the average time interval between services shortened slightly from the end of 1984 to the end of 1985. The combination of more machines in service and the shorter average service interval resulted in 5.9 percent additional services performed in 1985 over 1984. The average price per service in 1985 was four percent higher than in 1984. Service revenues and sales from the Company's parts cleaner service increased $13,051,000, or nine percent, in 1984 over 1983. Of this increase, eighty-two percent was derived from service revenues, while eighteen percent was due to growth in allied product sales. Parts cleaners in service increased 4.2 percent in 1984. In addition, the average time interval between services shortened slightly from the end of 1983 to the end of 1984. The combination of more machines in service and the shorter average service interval resulted in 6.5 percent additional services performed in 1984 over 1983. The average price per service in 1984 was two percent higher than in 1983.

The combined revenues of the Company's newer service areas increased twenty-seven percent in 1986, sixty-eight percent in 1985, and forty-seven percent in 1984. Excluding revenues of the map distribution business, sold in October, 1985, the combined revenues of the Company's newer service areas increased thirty-two percent in 1986.

Branch Operating Costs and Expenses and Cost of Sales. Branch operating costs and expenses and cost of sales improved to 65.6 percent of sales in 1986 as compared to 66.6 percent of sales in 1985. This improvement in overall margins is due to higher gross margins in the parts cleaner service and an improvement in the newer service areas. The improvement in gross margins in the parts cleaner service is primarily due to the higher unit volume of services, price increases and lower cost of virgin solvents. The continuing trend of improving combined gross profit in the newer service areas is primarily due to additional revenues derived from higher unit volume sales and the favorable effects of spreading the fixed and semi-variable cost components over a larger revenue base.

Branch operating costs and expenses and cost of sales improved slightly to 66.6 percent of sales in 1985 as compared to 66.9 percent of sales in 1984.

Branch operating costs and expenses and cost of sales represented 66.9 percent of sales in 1984 as compared to 67.9 percent of sales in 1983. This improvement in overall margins is due to higher gross margins in the parts cleaner service and an improvement in the newer service areas from a combined loss at the gross profit level in 1983 to a combined profit in 1984. The improvement in gross margins in the parts cleaner service is primarily due to the higher unit volume of services, price increases and lower cost of virgin solvents. The improvement in the combined gross profit in the newer service areas is primarily due to additional revenues derived from higher unit volume sales and the favorable effects of spreading the fixed and semi-variable cost components over a larger revenue base.

Selling and Administrative Expenses. Selling and administrative expenses rose at a faster rate than revenues in 1986 and at a lesser rate than revenues in 1985. The increases in both years were primarily due to higher insurance costs, additional employees and employee expenses, increases in salaries and benefits, and increases in other compensation based upon sales and consolidated earnings. The acquisition of Custom Organics, Inc., also contributed to the 1985 increase.

Interest, net. In 1986, 1985 and 1984, respectively, $2,351,000, $380,000 and $1,437,000 of income is included in Interest, net in connection with the purchase of Federal income tax benefits as discussed in Note 9 to the Consolidated Financial Statements appearing on page 43. As a result of the Tax Reform Act of 1986, Interest, net in 1986 includes $2,689,000 of non-recurring additional income recorded in connection with the purchase of these Federal income tax benefits. These amounts are included in Interest, net with no corresponding income tax effect. Exclusive of amounts recorded in connection with tax benefits, Interest, net increased $220,000 from 1985 to 1986 due to higher average investment balances during 1986. Exclusive of amounts recorded in connection with tax benefits, Interest, net declined by $247,000 from 1984 to 1985 primarily due to lower interest rates.

Income Taxes. The effective income tax rate was forty-four percent in 1986, forty-three percent in 1985 and forty-four percent in 1984. The effective 1986 rate is higher than 1985 primarily due to the effects of the Tax Reform Act of 1986. If the Act had not repealed the investment tax credit, the Company would have reported approximately $1,538,000 lower income tax expense for the full year 1986. Exclusive of the effects of the Act, the effective 1986 income tax rate would have been approximately forty-three percent, which is comparable to the 1985 rate. The effective 1985 rate is lower than in 1984 primarily due to the favorable effects of the change to the flow-through accounting method for investment tax credits (as more fully described in Note 1 to the Consolidated Financial Statements appearing on page 37) and a lower statutory tax rate in the United Kingdom, partly offset by lower Interest, net recorded in connection with the purchase of tax benefits.

Report of Independent Public Accountants

To the Board of Directors and Shareholders of Safety-Kleen Corp.:

We have examined the consolidated balance sheets of Safety-Kleen Corp. (a Wisconsin corporation) and Subsidiaries as of January 3, 1987, and December 28, 1985 and the related consolidated statements of earnings, shareholders' equity and changes in financial position for each of the three fiscal years in the period ended January 3, 1987. Our examinations were made in accordance with generally accepted auditing standards and, accordingly, included such tests of the accounting records and such other auditing procedures as we considered necessary in the circumstances.

In our opinion, the consolidated financial statements referred to above present fairly the financial position of Safety-Kleen Corp. and Subsidiaries as of January 3, 1987, and December 28, 1985, and the results of their operations and the changes in their financial position for each of the three fiscal years in the period ended January 3, 1987, in conformity with generally accepted accounting principles which, except for the change (with which we concur) in accounting for investment tax credits as discussed in Note 1, were applied on a consistent basis.

Arthur Andersen & Co.

Chicago, Illinois,
February 6, 1987.

Consolidated Statements of Earnings

Safety-Kleen Corp. and Subsidiaries

(Expressed in thousands, except per share amounts)

Fiscal Year Ended	Jan. 3, 1987*	Dec. 28, 1985	Dec. 29, 1984
Revenues and Sales			
Service revenues	$219,000	$186,081	$155,065
Sales (primarily allied products)	36,356	34,999	30,565
	255,356	221,080	185,630
Costs and Expenses			
Branch operating costs and expenses and cost of sales	167,411	147,322	124,228
Selling and administrative expenses	41,658	34,356	29,579
Interest, net (Note 9)	(4,060)	(1,869)	(3,173)
	205,009	179,809	150,634
Earnings Before Income Taxes and Cumulative Effect of Change in Accounting Principle	50,347	41,271	34,996
Income Taxes (Note 9)	22,093	17,792	15,568
Earnings Before Cumulative Effect of Change in Accounting Principle	28,254	23,479	19,428
Cumulative Effect of Change in Accounting for Investment Tax Credits (Note 1)	–	3,706	–
Net Earnings	$ 28,254	$ 27,185	$ 19,428
Per Share (Note 1)			
Earnings before cumulative effect of change in accounting principle	$ .86	$ .73	$ .62
Cumulative effect of change in accounting for investment tax credits (Note 1)	–	.11	–
Net Earnings	$ .86	$ .84	$ .62

*Fifty-three week fiscal year

The accompanying notes are an integral part of these financial statements.

Consolidated Statements of Shareholders' Equity

Safety-Kleen Corp. and Subsidiaries

(Amounts expressed in thousands)

Common Shares Outstanding		Total Shareholders' Equity	Common Stock	Paid-In Surplus	Retained Earnings	Cumulative Translation Adjustments
9,111,929	Balance at January 1, 1984	$ 70,302	$ 911	$ 7,742	$ 62,937	$(1,288)
—	Net earnings	19,428	—	—	19,428	—
4,601,670	Stock issued as a result of a split-up effected in the form of a 50% stock dividend (Note 7)	—	461	(461)	—	—
—	Cash dividends—$.30 per share	(4,136)	—	—	(4,136)	—
102,184	Stock options exercised	1,611	10	1,601	—	—
—	Tax benefits arising from stock option transactions	172	—	172	—	—
—	Change in cumulative translation adjustments (Note 4)	(970)	—	—	—	(970)
13,815,783	Balance at December 29, 1984	86,407	1,382	9,054	78,229	(2,258)
298,228	Adjustment for the pooling of interest of Custom Organics, Inc. (Note 2)	2,823	30	39	2,754	—
14,114,011	Restated balance at Dec. 29, 1984	89,230	1,412	9,093	80,983	(2,258)
—	Net earnings (Note 1)	27,185	—	—	27,185	—
7,140,316	Stock issued as a result of a split-up effected in the form of a 50% stock dividend (Note 7)	—	714	(714)	—	—
—	Cash dividends—$.28 per share	(5,937)	—	—	(5,937)	—
187,201	Stock options exercised	1,841	18	1,823	—	—
—	Tax benefits arising from stock option transactions	174	—	174	—	—
—	Change in cumulative translation adjustments (Note 4)	1,150	—	—	—	1,150
21,441,528	Balance at December 28, 1985	113,643	2,144	10,376	102,231	(1,108)
—	Net earnings	28,254	—	—	28,254	—
—	Cash dividends—$.32 per share	(6,898)	—	—	(6,898)	—
180,817	Stock options exercised	1,915	18	1,897	—	—
—	Tax benefits arising from stock option transactions	278	—	278	—	—
—	Change in cumulative translation adjustments (Note 4)	253	—	—	—	253
21,622,345	Balance at January 3, 1987	137,445	2,162	12,551	123,587	(855)
10,811,173	Retroactive effect of stock issued as a result of a March 5, 1987 split-up effected in the form of a 50% stock dividend (Note 7)	—	1,081	(1,081)	—	—
32,433,518	Restated balance at Jan. 3, 1987	$137,445	$3,243	$11,470	$123,587	$ (855)

The accompanying notes are an integral part of these financial statements.

Consolidated Balance Sheets

Safety-Kleen Corp. and Subsidiaries

	(Expressed in thousands) January 3, 1987	December 28, 1985
Assets		
Current Assets		
Cash	$ 6,669	$ 3,645
Short-term investments, at cost (approximates market)	11,995	17,947
Trade accounts receivable, less allowances of $2,069,000 and $1,996,000 respectively	29,596	25,298
Refundable taxes	61	753
Inventories (Note 5)	18,934	16,617
Prepaid expenses (Note 8)	11,649	8,831
Other	181	3,956
	79,085	77,047
Equipment at Customers and Components, at Cost, Less Accumulated Depreciation of $21,575,000 and $18,512,000 respectively	21,887	19,654
Property, at Cost		
Land	5,500	3,396
Buildings and improvements	29,087	19,695
Leasehold improvements	15,364	14,525
Machinery and equipment	53,366	37,771
Autos and trucks	42,558	27,723
	145,875	103,110
Less accumulated depreciation and amortization	38,826	29,173
Property, net	107,049	73,937
Other Assets	4,741	6,247
	$212,762	$176,885

Liabilities and Shareholders' Equity		
Current Liabilities		
Dividends payable	$ –	$ 1,715
Notes payable	135	135
Current portion of long-term debt	1,000	1,000
Trade accounts payable	13,364	9,974
Accrued salaries, wages and employee benefits	8,943	6,461
Other accrued expenses	6,736	5,172
Income taxes payable (Note 9)	6,919	6,408
	37,097	30,865
Long-Term Debt, Less Current Portion (Note 6)	9,900	11,700
Deferred Income Taxes (Note 9)	28,320	20,677
Commitments and Contingent Liabilities (Note 10)		
Shareholders' Equity		
Common stock ($.10 par value; authorized 75,000,000 shares and 25,000,000 shares, respectively; issued and outstanding 32,433,518 shares and 21,441,528 shares, respectively) (Note 7)	3,243	2,144
Paid-in surplus	11,470	10,376
Retained earnings (Note 6)	123,587	102,231
Cumulative translation adjustments (Note 4)	(855)	(1,108)
	137,445	113,643
	$212,762	$176,885

The accompanying notes are an integral part of these balance sheets.

Consolidated Statements of Changes in Financial Position

Safety-Kleen Corp. and Subsidiaries

Fiscal Year Ended	Jan. 3, 1987*	Dec. 28, 1985	Dec. 29, 1984
	(Expressed in thousands)		
Sources of Funds			
Operations			
Net earnings (Note 1)	$28,254	$27,185	$19,428
Items not requiring funds			
Depreciation of equipment at customers	3,555	3,170	2,771
Other depreciation and amortization	11,207	8,611	5,835
Deferred investment tax credits (Notes 1 and 9)	—	(4,260)	753
Deferred income taxes (Note 9)	7,555	7,517	6,458
Other	227	1	(282)
Total funds from operations	50,798	42,224	34,963
Other Sources			
Issuance of Industrial Development Revenue Bonds	—	5,700	—
Draw down of Industrial Revenue Bond Trust Funds	3,676	—	—
Recovery of investment in tax benefits (Note 9)	—	528	1,970
Net book value of equipment at customers, plant and equipment retired	410	2,447	193
Stock options exercised and related tax benefits (Note 7)	2,193	2,015	1,783
Total other sources	6,279	10,690	3,946
Total sources	57,077	52,914	38,909
Application of Funds			
Equipment at customers and component additions	5,692	6,329	3,487
Property, plant and equipment additions	44,314	26,571	29,405
Cash dividends declared	6,898	5,937	4,136
Establishment of Industrial Revenue Bond Trust Funds	—	3,623	—
Reduction of long-term debt	1,800	1,103	964
Cumulative translation adjustments (Note 4)	(172)	(979)	743
Other, net	2,739	1,069	360
Total application	61,271	43,653	39,095
Increase (Decrease) in Working Capital	$ (4,194)	$ 9,261	$ (186)
Details of Increase (Decrease) in Working Capital			
Increase (Decrease) in current assets			
Cash	$ 3,024	$ 2,613	$ (1,093)
Short-term investments	(5,952)	1,463	(363)
Trade accounts receivable	4,298	3,750	2,810
Refundable taxes	(692)	(2,652)	(1,602)
Inventories	2,317	3,449	1,112
Prepaid expenses	2,818	2,945	4,224
Other	(3,775)	1,986	(1,266)
Total increase in current assets	2,038	13,554	3,822
Decrease (Increase) in current liabilities			
Dividends payable	1,715	(334)	(1,381)
Notes payable	—	1,261	142
Current portion of long-term debt	—	65	230
Trade accounts payable	(3,390)	(1,350)	(1,229)
Accrued expenses	(4,046)	(1,140)	(1,313)
Income taxes payable	(511)	(2,795)	(457)
Total (increase) in current liabilities	(6,232)	(4,293)	(4,008)
Increase (Decrease) in Working Capital	$ (4,194)	$ 9,261	$ (186)

*Fifty-three week fiscal year

The accompanying notes are an integral part of these financial statements.

Notes to Consolidated Financial Statements

Safety-Kleen Corp. and Subsidiaries

1. Summary of Significant Accounting Policies

Principles of Consolidation

The Consolidated Financial Statements include the accounts of the Company and its subsidiaries, after elimination of all significant intercompany balances and transactions. The Company's fiscal year ends on the Saturday closest to December 31. As a result, the Consolidated Financial Statements include fifty-three weeks in the fiscal year ended January 3, 1987, and fifty-two weeks in the two preceding fiscal years.

Inventories

Substantially all domestic allied product and solvent inventories are stated at last-in, first-out cost (LIFO). All other inventories are priced at the lower of first-in, first-out cost (FIFO) or market. Inventory costs include material, labor and manufacturing overhead.

Equipment at Customers and Related Depreciation

Equipment at customers is capitalized at manufactured or purchased cost. Depreciation is computed using the straight-line method commencing when the units are placed in service.

Property, Plant and Equipment and Related Depreciation

Land, buildings and improvements, leasehold improvements, machinery and equipment, and autos and trucks are capitalized at cost. Depreciation and amortization are computed principally using the straight-line method, except for autos and trucks which are depreciated using the straight-line and sum-of-the-years-digits methods.

International License and Joint Venture Agreements

Safety-Kleen licensees operate parts cleaner service businesses in Australia, Hawaii, Japan, New Zealand, Puerto Rico and West Germany. License fees received by the Company are included in service revenues in the Consolidated Statements of Earnings. The Company has options to purchase the Australia and New Zealand operations on or after December 31, 1989 and the West German operation on or after August 30, 1991.

During 1985, the Company entered into joint venture agreements to engage in the parts cleaner service business in France and Spain. The Company owns fifty percent of these joint venture companies. These investments are accounted for by the equity method. The French joint venture began operations in the fourth quarter of 1985, and the Spanish joint venture began operations during the first quarter of 1986. The joint venture companies are licensees of the Company.

Income Taxes

The Company provides for income taxes on items included in the Consolidated Statements of Earnings regardless of the period when such taxes are payable. Deferred income taxes arise primarily from the excess of accelerated depreciation used for tax purposes over depreciation recorded for financial statement purposes, and from tax lease agreements more fully described in Note 9.

In 1985, the Company changed its method of accounting for investment tax credits from the deferral to the flow-through method. The effect of the change was to increase earnings before cumulative effect of change in accounting principle by $673,000 or $.02 per share for the fiscal year ended December 28, 1985. The cumulative prior years' effect of the change increased net earnings by $3,706,000 or $.11 per share. If the flow-through method of accounting for investment tax credits had been used in prior years, 1984 net earnings would have been $440,000 or $.01 per share, higher than as reported.

Earnings Per Share

Earnings per share amounts are based on the average shares of common stock outstanding during each year and common stock equivalents of dilutive stock options. Earnings per share amounts have been restated to give effect to the three-for-two stock splits in March, 1987 (retroactive effect—see Note 7), December, 1985, and December, 1984, all effected in the form of 50 percent stock dividends.

2. Acquisition of Custom Organics, Inc.

Effective August 6, 1985, the Company acquired all of the outstanding shares of Custom Organics, Inc. in exchange for 686,250 shares of the Company's common stock (adjusted for the three-for-two stock splits on March 5, 1987 and December 9, 1985). The acquisition was accounted for as a pooling of interests, and accordingly, the Consolidated Financial Statements were restated to include the accounts of Custom Organics, Inc. for the twenty-four weeks ended June 15, 1985 (the interim period prior to the acquisition). The effect of the restatement was to increase sales and net earnings by $2,953,000 and $259,000, respectively, for the twenty-four weeks ended June 15, 1985. Earnings per share for that period remain unchanged. The Consolidated Balance Sheet as of December 29, 1984, was restated to include the accounts of Custom Organics, Inc. The Consolidated Balance Sheet, Statements of Earnings, Changes in Financial Position and Shareholders' Equity for periods prior to December 29, 1984, have not been restated because the effect was not material.

3. Segment Information

The Company and its subsidiaries operate in three countries: the United States, Canada and the United Kingdom. Principally, the same services and products are provided in each country. A summary of certain data with respect to these operations for the fiscal years ended January 3, 1987, December 28, 1985 and December 29, 1984 is as follows:

	(Expressed in thousands)		
	1986*	1985	1984
Service Revenues and Sales			
United States	$236,029	$206,400	$172,161
Canada and United Kingdom	19,327	14,680	13,469
Consolidated	$255,356	$221,080	$185,630
Total Assets			
United States	$195,029	$164,288	$131,566
Canada and United Kingdom	17,733	12,597	8,971
Consolidated	$212,762	$176,885	$140,537
Net Earnings (Note 1)			
United States	$ 25,849	$ 25,609	$ 18,074
Canada and United Kingdom	2,405	1,576	1,354
Consolidated	$ 28,254	$ 27,185	$ 19,428

*1986 is a fifty-week fiscal year.

The Company operates primarily in one business segment—providing services and products for degreasing and metal preparation. Total revenues, assets and earnings/losses of other segments are less than ten percent of the respective consolidated totals.

4. Foreign Currency Translation

The Company applies the provisions of Statement of Financial Accounting Standards No. 52 in translating the financial statements of its consolidated foreign subsidiaries.

An exchange gain of $21,000 in 1986, and exchange losses of $87,000 in 1985 and $128,000 in 1984 are included in selling and administrative expenses.

5. Inventories

LIFO inventories at January 3, 1987, and December 28, 1985, were $7,435,000 and $7,206,000, respectively. Under the FIFO method of accounting (which approximates current or replacement cost), inventories would have been $1,781,000 and $2,983,000 higher, respectively.

Major classes of inventory are:	(Expressed in thousands) January 3, 1987	December 28, 1985
Allied products and related items	$ 7,252	$ 8,071
Solvent	4,765	3,856
Other	6,917	4,690
Total inventories	$18,934	$16,617

6. Financial Arrangements and Long-Term Debt

Long-term debt at January 3, 1987, and December 28, 1985 consisted of the following:

	(Expressed in thousands) January 3, 1987	December 28, 1985
9¼% Senior Notes payable to an insurance company, due in annual installments of $800,000 from 1987 to 1991	$ 4,000	$ 5,600
Obligations under Licking County, Ohio 8% Industrial Development Revenue Bonds, Series 1980, due $200,000 annually from 1987 to 1992	1,200	1,400
Obligations under Lexington County, South Carolina Industrial Development Revenue Bonds, Series 1985, interest of 70.0% of floating prime rate, due $300,000 annually from 1991 to 2000	3,000	3,000
Obligations under City of Denton, Texas Industrial Development Authority, Industrial Development Revenue Bonds, Series 1985, interest of 68.3% of floating prime rate, due $270,000 annually from 1991 to 2000	2,700	2,700
	10,900	12,700
Less current portion	1,000	1,000
Total long-term debt	$ 9,900	$11,700

Maturities of long-term debt are $1,000,000 in each of the four fiscal years succeeding January 3, 1987, and $1,570,000 in fiscal year 1991. The Company has the option to prepay up to $800,000 annually, without penalty, of the 9¼% Senior Notes and elected to do so in 1986.

The interest rates on the Lexington County, SC and City of Denton, TX Industrial Development Revenue Bonds are subject to change if changes in the Federal income tax laws affect the taxability of the interest income to the holder of these bonds. Accordingly, these rates have been revised to reflect the effect of the Tax Reform Act of 1986.

The 9¼ percent Senior Notes and the Industrial Development Revenue Bonds include provisions, among others, relative to additional borrowings, maintenance of working capital, and restrictions on the amount of retained earnings available for dividends. Under the most restrictive of these covenants, the Company must maintain a current ratio, as defined, of 1.5 to 1.0. At January 3, 1987, the current ratio, as defined, was 2.1 to 1.0. At that date, $87,917,000 of retained earnings were restricted as to payment of cash dividends.

The Company has established with a U.S. bank an unsecured line of credit totaling $2,500,000 at the prime interest rate with compensating balances equal to 2.5 percent of the line of credit. The Company intends to continue this line of credit during fiscal 1987.

7. Capital Stock

Stock Splits

In March, 1987 (subsequent to the end of fiscal year 1986), December, 1985, and December, 1984, three-for-two stock splits were effected in the form of stock dividends by issuance of an additional share of $.10 par value common stock for each two shares then outstanding. The Consolidated Balance Sheet at January 3, 1987 reflects the March, 1987 stock split (declared by the Company's Board of Directors on February 6, 1987) applied on a retroactive basis. The par value of the shares issued was transferred from paid-in surplus to common stock. The number of shares and per share amounts below have been restated to reflect such distributions.

1985 Stock Option Plan

On May 10, 1985, shareholders approved the 1985 Stock Option Plan (the Plan). Under the Plan, options to purchase up to 1,125,000 shares of the Company's common stock may be granted to officers and other key employees at a price of 100 percent of the quoted market price at date of grant. Options granted under the Plan may be either Incentive Stock Options or Non-Qualified Stock Options. Stock appreciation rights (SARs) may be granted in conjunction with Non-Qualified Stock Options whereby the grantee may surrender exercisable Non-Qualified Options and receive a cash payment equal to the difference between the option price and the market value of the common stock on the exercise date. Incentive Options, Non-Qualified Options and SARs become exercisable at such time or times, and are subject to such conditions, as determined at the time of grant by the Compensation Committee of the Board of Directors.

At January 3, 1987, there were no outstanding options with SARs. Other option plan data for the two fiscal years ended January 3, 1987 are presented below.

1985 Stock Option Plan Data	1986	1985
Options outstanding at end of year		
Number of options	309,820	238,143
Average price per share	$17.96	$16.27
Options exercised during the year		
Number of options	3,580	—
Average price per share	$15.90	—
Number of options exercisable at end of year	36,662	—
Options available for grant at end of year	811,600	886,857

1980 Stock Option Plan

Under the Company's 1980 Stock Option Plan, as amended, options for 2,025,000 common shares were available for grant to officers and other key employees at a price of 100 percent of the quoted market price at date of grant. Options are exercisable 25 percent annually, on a cumulative basis, starting one year from date of grant and terminating five years after the grant date.

At January 3, 1987, there were no outstanding options with SARs. Other option plan data for the three fiscal years ended January 3, 1987 are presented below.

1980 Stock Option Plan Data	1986	1985	1984
Options outstanding at end of year			
Number of options	387,730	602,572	1,035,735
Average price per share	$ 8.21	$ 7.49	$ 7.21
Options exercised during the year			
Number of options	194,891	379,122	306,900
Average price per share	$ 5.85	$ 3.87	$ 3.41
Number of options exercisable at end of year	188,070	130,290	334,350
Options available for grant at end of year	—	—	—

No additional options may be granted under the plan after December 31, 1984.

Stock Purchase Plans

Under the Employee Stock Purchase Plan, approved by the shareholders on May 10, 1985, a total of 562,500 shares of the Company's common stock may be purchased by employees of the Company and designated subsidiaries, through payroll deductions, at 90 percent of the quoted market price for the date preceding the date of grant. Employees with less than one year of service or who hold options under either the 1980 or 1985 Stock Option Plans are not eligible to participate in this Plan. Under the predecessor plan, approved by shareholders in 1980, 1,012,500 shares of the Company's common stock were available for purchase. The provisions of the predecessor plan were substantially identical to the 1985 plan. Data for the Stock Purchase Plan and predecessor plan for the three years ended January 3, 1987 are presented below.

Stock Purchase Plan Data	1986	1985	1984
Options outstanding at end of year			
Number of options	63,690	76,132	87,075
Average price per share	$21.30	$13.00	$ 8.60
Options exercised during the fiscal year			
Number of options	70,578	81,700	56,025
Average price per share	$13.00	$ 8.63	$ 8.72
Number of options exercisable at end of year	—	—	—
Options available for grant at end of year	427,510	485,644	—

Shareholders Rights Plan

In August, 1986, the Company declared a dividend distribution of one common share purchase right on each outstanding share of common stock. When exercisable, each right will entitle its holder to buy one share of the Company's common stock at a price of $83.33 per share until August, 1996. The rights will become exercisable if a person acquires 20 percent of the Company's common stock or makes an offer that would result in such person owning 30 percent of the Company's stock. In the event the Company is acquired in a merger in which its shares are exchanged, each right entitles the holder to purchase common stock of the surviving company having a market value of twice the exercise price of the right. In the event the Company is the surviving company in a merger with a 20 percent holder and the shares of the Company are not exchanged, each right not owned by the 20 percent holder will entitle the holder to purchase common stock of the Company having a market value of twice the exercise price. The rights may be redeemed by the Company, at a price of five cents per right, at any time prior to the rights becoming exercisable.

8. Pension and Employee Benefit Plans

The Company has noncontributory pension plans covering substantially all full time employees in the United States. In addition, the Company's foreign subsidiaries have pension plans. Domestic pension costs are funded in compliance with ERISA requirements as employees become eligible to participate, generally, after completing one year of service.

During 1986, the Company adopted Statement of Financial Accounting Standards (SFAS) No. 87, "Employers Accounting for Pensions," as the basis of accounting for its domestic pension plans. In accordance with the provisions of SFAS No. 87, pension cost for prior periods has not been restated. This change in accounting is not material. The Company's Consolidated pension cost for the fiscal years 1986, 1985 and 1984 was approximately $1,066,000, $784,000 and $718,000, respectively.

The following table sets forth the domestic plans combined funded status at January 3, 1987.

	(Expressed in thousands)
Actuarial Present Value of Benefit Obligation:	
Vested Benefits	$ 5,026
Nonvested Benefits	1,743
Accumulated Benefit Obligation	6,769
Effect of projected future compensation levels	3,011
Projected Benefit Obligation	9,780
Plan Assets at fair Value	10,079
Projected benefit obligation less than plan assets	299
Unrecognized loss	174
Unrecognized net (assets) at January 3, 1987 to be amortized over 16 to 20 years	(1,299)
Unfunded accrued pension cost recognized in the January 3, 1987 Consolidated Balance Sheet	$ (826)

The plan's assets consist of equity funds, pooled funds of real estate and corporate bonds, and a group annuity contract.

Net periodic pension cost for the Company's domestic plans in 1986 includes the following components:

	(Expressed in thousands)
Service cost-benefits earned during the year	$966
Net amortization of unrecognized net assets	(72)
Interest on projected benefit obligation	601
Interest on plan assets	(669)
Net periodic pension cost	$826

The projected benefit obligation as of December 31, 1986 was determined using an assumed discount rate of 8%, and rates of compensation increase of 7%. The expected long-term rate of return on assets used in determining net periodic pension cost was 8%.

The Company also has defined contribution pension plans covering employees of its foreign subsidiaries. Those plans are funded by purchase of insurance contracts and vested benefits are fully funded. The Company's foreign subsidiaries are not required to report under ERISA and do not otherwise determine the actuarial value of accumulated plan benefits or net assets available for benefits as disclosed above for the Company's domestic pension plans.

During 1984, the Company established a Voluntary Employee Beneficiary Association (VEBA). The VEBA is an irrevocable trust created to fund employee medical and life insurance benefits. VEBA trust balances of $7,412,000 and $5,484,000, respectively, are included in Prepaid expenses in the January 3, 1987 and December 28, 1985 Consolidated Balance Sheets.

Beginning in 1985, the Company offered a postretirement medical insurance plan to its domestic employees retiring prior to the normal retirement age of 65. Retirees are eligible to continue this medical coverage until age 65. Retirees electing this coverage are required to pay premiums for the insurance. Claims paid under the provisions of this plan are paid by the Company's employee medical plan which is funded by the VEBA trust. The number of participants in the plan and related costs are not material.

9. Income Taxes

The components of earnings before income taxes and cumulative effect of change in accounting principle, consisted of the following for each of the last three fiscal years:

	(Expressed in thousands)		
	1986	1985	1984
Domestic	$46,419	$38,644	$32,581
Foreign	3,928	2,627	2,415
	$50,347	$41,271	$34,996

The provisions for income taxes are comprised of the following:

	(Expressed in thousands)		
	1986	1985	1984
U.S. Federal			
Current	$10,144	$ 6,919	$ 5,324
Deferred			
Related to tax depreciation in excess of book depreciation	5,896	2,659	2,329
Investment tax credits (Note 1)	–	–	753
Related to tax lease agreements	1,669	4,173	2,081
Related to contributions to VEBA Trust (Note 8)	–	413	1,886
Decrease in prepaid taxes	–	93	108
Foreign			
Current	1,524	1,051	1,097
Deferred, primarily related to book depreciation in excess of tax depreciation	–	–	(36)
State	2,860	2,484	2,026
	$22,093	$17,792	$15,568

The following table reconciles the statutory U.S. Federal income tax rate to the Company's effective tax rate:

	1986	1985	1984
Statutory U.S. Federal income tax rate	46.0%	46.0%	46.0%
Increase (Decrease) resulting from–			
Provision for state income taxes, net of Federal income tax benefit	3.2	3.3	3.1
Amortization of deferred investment tax credits (Note 1)	–	–	(2.5)
Flow through of investment tax credits (Note 1)	(2.2)	(4.4)	–
Tax lease agreements and other	(3.1)	(1.8)	(2.2)
Effective tax rate	43.9%	43.1%	44.4%

As a result of the Tax Reform Act of 1986, signed into law on October 22, 1986, the investment tax credit has been repealed. During the final interim period of 1986, the provision for income taxes includes $991,000 of additional expense to reverse investment tax credit benefits recorded in previous 1986 interim periods but no longer available as a result of the Act. If the Act had not repealed the investment tax credit, the Company would have reported approximately $1,538,000 lower income tax expense for the full year 1986.

In 1983, 1982 and 1981, the Company entered into several "tax lease" agreements to purchase tax benefits. The total cash price paid by the Company was approximately $21.1 million.

Under these agreements, which vary in length from nine to twenty-two and one-half years, the Company purchased the tax benefits, including investment tax credits, related to equipment with a cost of approximately $74.5 million. This equipment was simultaneously leased back to the original owners, who continue to have legal title to the assets and bear all risks of ownership. At the end of the lease agreements, "tax ownership" reverts to the original owners for a nominal price.

For financial statement purposes, the cash payment of $21.1 million was treated as an investment. The investment has been reduced as a result of a reduction in taxes which otherwise would have been payable, net of income recognized on the investment. Investment tax credits were utilized to reduce Federal income taxes payable in the year of equipment purchase. Depreciation and other items related to the agreements were used to reduce taxes under the Company's normal tax accounting methods.

The investment tax credits and depreciation deductions the Company has taken on its tax return as a result of these transactions have generated a tax deferral in excess of the cash price paid. This deferral will ultimately be paid by the Company as net lease income is reported for tax purposes. The enactment of the Tax Reform Act of 1986 lowers the statutory corporate Federal income tax rate, which results in a reduction in the estimated taxes that ultimately will be paid under these transactions. The Company has included in its final 1986 interim period this benefit of $2,689,000 in Interest, net, with an offsetting reduction in Deferred income taxes on the accompanying Consolidated Balance Sheet. The Company will be in a favorable cash flow position for most of the life of each lease.

Interest income is recorded at a constant rate during the time period when the investment exceeds the tax savings. Interest expense is recorded at a constant rate on the deferred income taxes in the time period after the investment is fully recovered. Income and expense recorded for these agreements is included in Interest, net with no corresponding income tax effect. In 1986, 1985 and 1984, the Company recorded $2,351,000 (including the $2,689,000 discussed above), $380,000 and $1,437,000, respectively, of interest, net in connection with these agreements.

The transactions also include notes to the sellers for the difference between the cash price of $21.1 million and the asset cost of $74.5 million. Payments on these notes, including interest, are due in amounts and at times exactly equal to the sellers' obligations to make lease payments to the Company. Since these amounts completely offset one another, there will be no actual payment or receipt of cash and therefore, the notes and lease obligations are not reported in the Company's Consolidated Financial Statements.

10. Commitments and Contingent Liabilities

The Company leases the majority of its branches over initial periods of five to ten years, with options for renewal for one similar period. These leases generally provide that the Company pay operating maintenance expenses and tax increases and do not contain provisions for the Company to purchase the leased properties. The Company leases substantially all pre-1982 additions to its domestic service truck fleet under terms that are noncancelable during the first year and are on a year-to-year rental basis thereafter. These leases provide that the Company pay all operating expenses and taxes and also that the Company be responsible for most of the gain or loss on disposition of the trucks upon termination or cancellation of the leases. Since 1982, the Company has purchased substantially all additions and replacements to the service truck fleet.

Lease rental expenses for all operating leases were $6,680,000 in 1986, $5,713,000 in 1985 and $6,235,000 in 1984.

Aggregate minimum future rentals are payable as follows:

Periods	(Expressed in thousands)
1987	$ 5,064
1988	4,105
1989	3,166
1990	2,472
1991	1,779
Future Years	7,607
Total	$24,193

The Company is not able currently to purchase liability insurance in amounts or upon terms that have been available to it traditionally. This development is not unique to the Company or its industry. In addition, on October 1, 1985, the Company's existing policy of environmental impairment liability (EIL) insurance coverage expired. In order to meet existing governmental requirements, the Company has been able to secure EIL insurance coverage in amounts which the Company believes are in compliance with the amounts required by Federal law. Under this policy, the Company must reimburse the carrier for losses. Except for this coverage, the Company has not been able to obtain comprehensive EIL insurance coverage on any terms.

Directors

Russell A. Gwillim, Chairman of the Board, Safety-Kleen Corp.
Kenneth L. Block, Chairman, A. T. Kearney, Inc.
Donald W. Brinckman, President and Chief Executive Officer, Safety-Kleen Corp.
Richard T. Farmer, Chairman and Chief Executive Officer, Cintas Corporation
Edgar D. Jannotta, Managing Partner, William Blair & Company
Karl G. Otzen, President, Gerhard & Company
Paul D. Schrage, Senior Executive Vice President, McDonald's Corporation
W. Gordon Wood, Marketing Consultant

Officers and Divisional Vice Presidents

Donald W. Brinckman, President, Chief Executive Officer and Director
Robert J. Burian, Vice President Personnel
David A. Dattilo, Vice President Corporate Branch Sales and Service
Burton E. Ericson, Vice President General Counsel
Kenneth R. Gordon, Vice President Technical Services
Joseph F. Hamlet, Vice President International
William P. Kasko, Vice President Operations
Wallace K. Louder, Vice President Information Systems
Robert W. Willmschen, Jr., Vice President Finance/Administration and Secretary
Leonard F. Martinez, Jr., Controller and Assistant Secretary
Laurence M. Rudnick, Treasurer
Roy D. Bullinger, Vice President Branch Sales and Service, Central Division
Harry A. Logue, Vice President Branch Sales and Service, Eastern Division
Dale T. Vranik, Vice President Branch Sales and Service, Western Division
Clyde R. Phillips, Vice President Restaurant Services

Corporate Data

Corporate Office

Safety-Kleen Corp., 777 Big Timber Road, Elgin, Illinois 60123
Telephone: 312/697-8460

Auditors

Arthur Andersen & Co., 33 W. Monroe Street, Chicago, Illinois 60603

Registrar and Transfer Agent

The First National Bank of Chicago, One First National Plaza, Chicago, Illinois 60670

Annual Meeting

The Annual Meeting of Shareholders of Safety-Kleen Corp. will be held at 10:00 a.m., Friday, May 8, 1987, at The Northern Trust Company, 50 S. LaSalle Street, Chicago, Illinois 60675.

Stock Listing

Safety-Kleen stock is traded on the New York Stock Exchange.

Stock Symbol

SK

Form 10-K

Safety-Kleen's Annual Report to the Securities and Exchange Commission on Form 10-K is available, on request, from Safety-Kleen's Corporate Secretary, 777 Big Timber Road, Elgin, Illinois 60123.