SKFA 2003
SKAL 2003

safety-kleen®

LIBRARY COPY

OVERNIGHT DELIVERY
~~RETURN RECEIPT REQUESTED~~
Airborne Express
9825645686
February 16, 2003

FEB 2003

Mr. Steve Pullen
Permits Management Program
State of New Mexico Environment Department
Hazardous Waste Bureau
2905 Rodeo Park Drive East, Building 1
Santa Fe, New Mexico 87505-6303

Re: Notices of Deficiency (NOD) for Safety-Kleen Farmington and Safety-Kleen Albuquerque Facilities

Dear Mr. Pullen:

Safety-Kleen Systems, Inc. (S-K) operates service centers in Farmington, New Mexico (4210A Hawkins Road) and Albuquerque (2720 Girard NE) for temporary accumulation and storage of hazardous wastes, prior to transporting offsite for reclamation, treatment or disposal. RCRA Permit Renewal Applications were submitted to the New Mexico Environment Department/Hazardous Waste Bureau (NMED/HWB).

In a letter (Notice of Deficiency) dated November 15, 2002, NMED/HWB required additional information. A response to the NMED/HWB NOD and the required information is provided with this correspondence. Each of the NMED/HWB items is summarized below for convenience. A response providing the supplemental information follows each of the NMED requests.

NMED/HWB Item No. 1.

The waste analysis plan (WAP) fails to identify the specific waste characterization regulations that must be addressed before wastes can be managed at the facility. NMED requires that Safety-Kleen address, at a minimum, the data quality objectives (DQOs) identified at Appendix I in NMEDs November 15, 2002 letter.

S-K Response No. 1.

Text has been added to the Waste Analysis Plan explaining how each of the DQOs are met.

NMED/HWB Item No. 2.

The Safety-Kleen facility permit application fails to address all applicable land disposal restriction (LDR) regulatory requirements. Safety-Kleen must commit to ensure that all hazardous wastes stored at the facility are characterized for all applicable LDR notification requirements as identified in NMEDs November 15, 2002 letter.

a. Identify all hazardous constituents in prohibited hazardous wastes requiring treatment, including "regulated hazardous constituents", and underlying hazardous constituents (UHC)s.
b. Identify applicable "waste code categories".
c. Identify the waste's applicable treatability group, and treatment standards.

d. Identify whether the waste must be treated before it can be land disposed.

S-K Response No. 2.

Safety-Kleen will commit to the items noted in in NMEDs November 15, 2002 letter as now noted in the WAP and as demonstrated below in "a", "b", "c", and "d".

a. As noted in the new text in the WAP, regulated hazardous constituents and UHCs are identified in the annual recharacterization process.
b. As can be seen on the attached example LDRs, waste code subcatagories are being identifed.
c. As can be seen on the attached example LDRs, the treatment standard or constituent concentration is identified.
d. The attached example LDR also notes whether the waste may be land disposed before it can be land disposed.

NMED/HWB Item No. 3.

Safety-Kleen shall commit to store waste for no more than one year as required in 40 CFR 268.50.

S-K Response No. 3.

Safety-Kleen commits to store waste for no more than one year as required in 40 CFR 268.50. This is now noted in the WAP.

NMED/HWB Item No. 4.

Safety-Kleen shall explain:

a. Whether the commingling of wastes with different LDR statuses would constitute the generation of a new waste; and
b. Whether segregating the sediments referenced in Section A.1.1 would constitute the generation of a new waste due to a change in the treatability group.

S-K Response No. 4.

a. Commingling wastes of different LDR statuses would constitute the generation of a new waste. However, the commingled wastes all have the same LDR status generated in the annual recharacterization process.
b. Segregating the sediments in Section A.1.1 would constitute the generation of a new waste and may change the treatability group. The WAP identifies sediments as a new waste subject to the same annual recharacterization process as other wastes handled by the facility.

NMED/HWB Item No. 5.

The WAP suggests that a laboratory analysis was performed only four times on Safety-Kleen wastes in the period between 1997 and 1999 (i.e., four different waste streams were analyzed once).. SafetyKleen shall explain whether this observation is accurate.

S-K Response No. 5.

The observation is accurate if the observation is that laboratory analysis was performed only four times on Safety-Kleen wastes generated in New Mexico. However, laboratory analysis was performed on Safety-Kleen wastes hundreds of times across the United States. In choosing to analyze wastes across the country, Safety-Kleen recognizes that parts washers use the same materials to clean essentially similar parts from essentially similar processes across the country.

For example, cars and automobiles are all made of the same components, run on the same fuel, and are serviced in the same manner across the country.

NMED/HWB Item No. 6.

NMED considers the Albuquerque Safety-Kleen WAP to be more detailed and thus preferable.

S-K Response No. 6.

Safety-Kleen intends to operate all service centers in essentially the same manner where allowed by local regulations. The Albuquerque WAP has been copied with appropriate volume changes and is here submitted as the Farmington WAP.

NMED/HWB Item No. 7.

The WAP fails to recognize that before wastes are stored, they must be characterized as to whether they are authorized wastes.

S-K Response No. 7.

The WAP has been so modified. Safety-Kleen will not store wastes it is not authorized to store.

NMED/HWB Item No. 8.

Safety-Kleen shall submit a copy of the applicable Safety-Kleen standard operating procedures as related to the characterization and sampling of hazardous wastes.

S-K Response No. 8.

Attached is the Safety-Kleen Sampling training information. Employees are required to adhere to the training they have been given when taking samples.

Sincerely,

David Ashley
EHS Manager
Safety-Kleen Corporation

Enclosures

cc: File
Steve LuQuire, Safety-Kleen

DRAFT
2003 ANNUAL RECHARACTERIZATION WASTE CODES
National Waste Code Assignment

WASTE STREAMS	WASTE CODE CHANGES - NATIONAL			Utah	Minnesota	Texas		California
General Description	**2002 Federal Waste Codes (From 2001 Data)**	**2003 Federal Waste Codes (From 2002 Data)**	**Changes from 2002 to 2003**	**UT 2003 FWC**	**MN 2003 FWC**	**TX Waste Code (instate)**	**TX Waste Code (out of state)**	**2003 CA Waste Codes**
Aqueous Brake Cleaner	D039	D039	No Change	Nat'l	Nat'l	0839102H	OUTS102H	134
Branch Contaminated Debris	F001, F002, F003, F005, D001, D006, D007, D008, D011,D018, D022, D027, D028, D035, D039, D040	F001, F002, F003, F005, D001, D006, D007, D008, D011,D018, D022, D027, D028, D035, D036, D038, D039, D040	**Add D036 (nitrobenzene), D038 (pyridine)**	Nat'l	Nat'l	1827409H 1736319H	OUTS409H OUTS319H	741 (L) 751 (S)
Immersion Cleaner (IC 699)	D006, D008, D018, D027, D039, D040	D006, D008, D018, D027, D038, D039, D040	**Add D038 (pyridine)**	Nat'l + D007	Nat'l	0566203H	OUTS203H	741
Parts Washer Solvent 105 Recycled	D001, D018, D039, D040	D001, D018, D039, D040	No Change	Nat'l + D008	Nat'l + D008	0501203H	OUTS203H	741
Parts Washer Solvents (Bulked) / Combination of 105 and 150 (Aqueous, where applicable)	D001, D018, D039, D040	D001, D018, D039, D040	No Change	Nat'l	Nat'l + D008	0501203H	OUTS203H	741
Parts Washer Solvent Sludge/Dumpster Mud	D001, D039	D001, D039	No Change	Nat'l + D006, D008, D018, D040	Nat'l	0527695H	OUTS695H	741
Parts Washer Solvent Tank Bottoms (bulk)[1]	D039	D039, D040	**Add D040 (Trichloroethylene)**	Nat'l	Nat'l	0527695H	OUTS695H	741
Parts Washer Solvent 150	D039	D039	No Change	Nat'l	Nat'l + D008, D018, D040	0501203H	OUTS203H	213
Paint Gun Cleaner (SK)	F005, F003, D001, D018, D035, D039, D040	F003, F005, D001, D018, D035, D038, D039, D040	**Add D038 (pyridine)**	Nat'l + D007, D008	Nat'l	0523211H	OUTS211H	212
Paint Waste Other	F005, F003, D001, D018, D035, D039, D040	F003, F005, D001, D018, D035, D036, D038, D039, D040	**Add D036 (nitrobenzene), D038 (pyridine)**	Nat'l + D005, D007, D008	Nat'l	0523211H	OUTS211H	212
Dry Cleaner (Perc) Bottoms	F002, D007, D039, D040	F002, D007, D039, D040	No Change	Nat'l	Nat'l	0506609H	OUTS609H	741
Dry Cleaner (Perc) Filter Powder	F002, D039	F002, D039	No Change	Nat'l	Nat'l	0906310H	OUTS310H	751
Dry Cleaning Naphtha (Mineral Spirits)	D001, D039	D001, D039	No Change	Nat'l	Nat'l	0569609H	OUTS609H	741

Statistical Analysis of Annual Waste Characterization Data

Prepared by
Robert D. Gibbons Ph.D.

for

Safety Kleen
July 23, 1998

1 Introduction

Since 1990, Safety-Kleen has undertaken a major analytical study each year to document the contaminants in some of its most common waste streams to determine which TCLP waste codes should appear on the manifest for that waste. This Annual Waste Recharacterization Program is both expensive and extensive. Upon review, it appeared that regulatory agency instructions for how to interpret the data might not have been in line with current policy, as reflected in SW846. The general approach is based on development of an upper 90% confidence limit[1] for the true concentration of each constituent, which can in turn be directly compared to regulatory standards to determine if the waste code should or should not be added to a particular waste stream (e.g., Premium Gold Parts Washer Solvent 150). The regulatory basis for this type of comparison stems from U.S. EPA SW846 Chapter 9 (September 1986) guidance on determining if a waste stream is hazardous.[2] The primary complicating feature is the presence of large numbers of nondetects which raises serious question regarding the use of the parametric approach. In light of this concern, nonparametric methods are used throughout.[3] Specifically, following U.S. EPA SW846, we construct a nonparametric 90% upper confidence limit (UCL) for the 50th percentile of the distribution (i.e., median), which is equivalent to the 90% UCL for the mean in the case of a symmetric distribution such as the normal distribution.

---

[1]"Consequently, the CI employed to evaluate solid wastes is, for all practical purposes, a 90% interval." U.S. EPA SW846 (1986) chapter 9 page 6.

[2]"The upper limit of the CI for μ is compared with the applicable regulatory threshold (RT) to determine if a solid waste contains the variable (chemical contaminant) of concern at a hazardous level. The contaminant of concern is not considered to be present in the waste at a hazardous level if the upper limit of the CI is less than the applicable RT. Otherwise the opposite conclusion is reached. "U.S. EPA SW846 (1986) chapter 9 page 3

[3]"If the data do not adequately follow the normal distribution even after logarithm transformation, a nonparametric confidence interval can be constructed. This interval is for the median concentration (which equals the mean if the distribution is symmetric)." U.S. EPA Statistical Analysis of Ground-Water Monitoring Data at RCRA Facilities, April 1989, page 6-8

2 Method

Following Chapter 9 of SW846, the 90% UCL for the mean concentration obtained from a series of n representative samples is to be compared to the appropriate regulatory standard to determine if the waste stream is hazardous. If the UCL exceeds the standard, the waste stream is considered hazardous. The applicant must compute the UCL that is appropriate for the specific distributional form of the data. Given the large number of nondetects for many of the constituents, it is difficult if not impossible to clearly identify the underlying distributional form of the data. In this case, the U.S. EPA guidance indicates that a nonparametric alternative should be used.[4]

Nonparametric confidence limits are derived as follows. Given an unknown P x 100th percentile of interest (e.g. the 50th percentile or median),[5] where P is between 0 and 1, and n concentration measurements, the probability that any randomly selected concentration measurements being less than the P x 100th percentile is simply P and the probability of exceeding the P x 100th percentile is 1 - P. In light of this, the number of sample values falling below the P x 100th percentile out of a set of n measurements follows a Binomial distribution with parameters n and P.

The connection with the Binomial distribution can be used to determine an interval formed by a given pair of order statistics (i.e. ranked values) that will contain the percentile of interest, in this case the 50th percentile. Similarly, the Binomial distribution can also be used in constructing an upper limit (i.e. one-sided) for the percentile (e.g. a 90% upper confidence limit for the 50th percentile of the distribution). The computational formula for the cumulative binomial distribution $B(x;n,p)$, representing the probability of getting x or fewer successes in n trials with success probability p is given by

$$Bin(x;n,p) \equiv \sum_{i=0}^{x} \binom{n}{i} p^i (1-p)^{n-i}$$

To draw inference regarding the P = 50th percentile, we set p = .5 in the previous equation. For a one-sided UCL we compute

$$1-\alpha = 1 - Bin(U-1;n,.5)$$

beginning from the sample median. We then increase U by one until in this case 1 - α is equal to at least .90. The smallest value of U that provides 1 - $\alpha \geq .9$ is then the order statistic (i.e., ranked value) that is the nonparametric 90% UCL for the 50th percentile of the distribution.

---

[4] "If the data do not adequately follow the normal distribution even after logarithm transformation, a nonparametric confidence interval can be constructed." U.S. EPA, 1989

[5] "This interval is for the median concentration (which equals the mean if the distribution is symmetric)." U.S. EPA (1989), page 6-8

3 Illustration

Consider the following most recent 50 data values for PCE (D039) obtained from Premium Gold Parts Washer Solvent-150.

Table 1
Premium Gold Parts Washer Solvent - 150
50 most recent samples in order of increasing concentration
in ppm

<50.000	<1.000	<0.100	<0.100	<0.100
<0.100	<0.100	<0.100	<0.100	<0.100
<0.100	0.110	0.200	0.200	0.220
0.230	0.260	0.510	0.870	0.880
1.000	1.300	1.500	1.800	2.000
2.700	2.700	3.300	5.400	7.000
7.100	12.000	12.300	17.200	19.700
20.000	20.000	21.200	23.600	32.300
51.100	52.500	136.000	211.000	286.000
508.000	635.000	771.000	940.000	2810.000

For n =50, p =.5 and 1 - α = .9, we find that U = 31 is the smallest order statistic that provides 90% confidence or more (1 - α = .941). As such, we select the 31st largest value in Table 1 which is 7.1 ppm as our UCL. Since 7.1 ppm is larger than the standard of 0.7 ppm, then the D039 waste code is required for this waste stream.

4 Conclusion

The data in the following package have been interpreted using the methodology described. The waste codes for each stream were determined as those parameters for which the 90% UCL for the median concentration was above the regulatory limit, based on review of the last two years of samples or the most recent 50 samples, whichever yielded the larger number of samples to consider.

UNDERLYING HAZARDOUS CONSTITUENTS FOR 2003
(Based on Analytical Data from 2002 and Previous Years)

General Description	Aqueous Brake Cleaner	Branch Contaminated Debris	Immersion Cleaner (IC 699)	Parts Washer Solvent 105 Recycled	Parts Washer Solvents (Bulked) / Combination of 105 and 150 (Aqueous, where applicable)	Parts Washer Solvent Sludge/Dumpster Mud	Parts Washer Solvent Tank Bottoms (bulk)[1]
Underlying Hazardous Constituents	cadmium	1,1-dichloroethylene	2,4,5-trichlorophenol	2,4,6-trichlorophenol	1,4-dichlorobenzene	cadmium	2,4,5-trichlorophenol
	chromium	2,4,5-trichlorophenol	2,4,6-trichlorophenol	cadmium	2,4,5-trichlorophenol	chromium	2,4,6-trichlorophenol
	lead	2,4,6-trichlorophenol	chlorobenzene	chloroform	2,4,6-trichlorophenol	lead	cadmium
	mercury	acetone	chromium	chromium	cadmium	m-cresol	chromium
	silver	barium	m-cresol	lead	chlorobenzene	o-cresol	hexachlorobutadiene
	trichloroethylene	carbon tetrachloride	mercury	m-cresol	hexachlorobutadiene	silver	lead
		chlorobenzene	methyl ethyl ketone	mercury	lead	trichloroethylene	m-cresol
		hexachlorobutadiene	nitrobenzene	p-cresol	m-cresol		o-cresol
		hexachloroethane	o-cresol	silver	mercury		pentachlorophenol
		m-cresol	p-cresol		o-cresol		pyridine
		mercury	silver		pentachlorophenol		silver
		methyl isobutyl ketone			silver		
		o-cresol					
		p-cresol					
		pentachlorophenol					
		toluene					
		vinyl chloride					
		xylenes					

*** If the codes for pyridine (D038) or nitrobenzene (D036) get added to these wastestreams, then remove these compounds from the UHC list for this wastestream.**

UNDERLYING HAZARDOUS CONSTITUENTS FOR 2003
(Based on Analytical Data from 2002 and Previous Years)

General Description	Parts Washer Solvent 150	Paint Gun Cleaner (SK)	Paint Waste Other	Dry Cleaner (Perc) Bottoms	Dry Cleaner (Perc) Filter Powder	Dry Cleaning Naphtha (Mineral Spirits)
Underlying Hazardous Constituents	benzene	2,4,5-trichlorophenol	1,1-dichloroethylene	1,1-dichloroethylene	carbon tetrachloride	cadmium
	cadmium	1,4-dichlorobenzene	1,2-dichloroethane	1,4-dichlorobenzene	chloroform	chromium
	chlorobenzene	2,4,6-trichlorophenol	1,4-dichlorobenzene	2,4,5-trichlorophenol	chromium	lead
	chromium	acetone	2,4,5-trichlorophenol	2,4,6-trichlorophenol	mercury	methyl ethyl ketone
	lead	cadmium	2,4,6-trichlorophenol	benzene	trichloroethylene	
	m-cresol	chloroform	acetone	cadmium		
	mercury	chromium	barium	chlorobenzene		
	o-cresol	hexachlorobenzene	cadmium	chloroform		
	silver	hexachlorobutadiene	carbon tetrachloride	hexachlorobenzene		
	trichloroethylene	hexachloroethane	chlorobenzene	hexachlorobutadiene		
		lead	chloroform	hexachloroethane		
		m-cresol	chromium	lead		
		mercury	hexachlorobenzene	m-cresol		
		methyl isobutyl ketone	hexachlorobutadiene	mercury		
		nitrobenzene	hexachloroethane	methyl ethyl ketone		
		o-cresol	lead	nitrobenzene		
		p-cresol	m-cresol	o-cresol		
		pentachlorophenol	mercury	p-cresol		
		silver	methyl isobutyl ketone	pentachlorophenol		
		toluene	o-cresol	pyridine		
		xylenes	p-cresol	silver		
			pentachlorophenol			
			silver			
			toluene			
			vinyl chloride			
			xylenes			

*** If the codes for pyridine (D038)**
remove these compounds from tl

WASTE ANALYSIS PLAN

WASTE ANALYSIS PLAN

ABSTRACT

Waste Description	EPA Waste Code No.	Facility Capacity[1] (gallons)	Annual Amount[2]
Used Solvents	D001[3]	12,000	143
Tank/Dumpster Bottom Sediment	D001[3]	N/A	3
Used Immersion Cleaner	See Below[3]	6,990	3
Dry Cleaning Waste	F002[3]	Included with Used Immersion Cleaner	6
Used Solvent (aqueous)	See Below[3]	Included with Used Immersion Cleaner	3
Paint Waste	D001, F003, F005[3]	9,650	14
Photo Chemical Wastes	D011	Included with Used Immersion Cleaner	3

[1] The facility capacity is in gallons.

[2] The annual amount is in thousands of gallons.

[3] and may include D004, D005, D007, D008, D009, D010, D011, D018. D019, D021, D022, D023, D024, D025, D026, D027, D028, D029, D030, D032, D033, D034, D035, D036, D037, D038, D039, D040, D041, D042, D043.

The Facility shall store only wastes it is authorized to store. That is, Safety-Kleen will only store wastes included in Part A of the application for hazardous waste permit and not otherwise prohibited by the permit. Safety-Kleen will not store any hazardous waste for more than one year.

These waste streams are characterized annually as described in the "Statistical Analysis of Annual Waste Characterization Data", attached and incorporated herein by reference. (The most recent data are also included.) The testing and sampling methodology is as described in A.3, below. The data generated in this process is used to assign waste codes, if any, for each waste stream. The data generated in the annual recharacterization (AR) is also used to assist recycle centers in recycling or treating the waste streams. Recycle centers also rely on their own waste analysis plans to generate data to recycle materials and or dispose of waste. If while providing service to a customer if there is suspicion that the waste does not meet the acceptance criteria, the waste will not be picked up and the customer must provide information explaining what is in the waste and how the waste was adulterated. Please see the text below in this waste analysis plan.

Providing service to Safety-Kleen customers is dependent on a review of the customer business. If the business is a typical generator of that waste stream (for example, a garage generating parts washer waste), then limited review is performed. If the business is not a typical generator of that waste stream or if the business has other processes on site, a more detailed review of the business is performed and a certification

from the customer is required stating the waste will be as described without adulterants. For example, laboratory analysis of that customer's waste may be required.

Recycle centers test shipments of wastes for PCBs. If a shipment is discovered to contain PCBs, the source of the PCBs is traced and appropriate 40 CFR 761 requirements are implemented. Any equipment contaminated by PCBs is removed from service cleaned before being put into service.

In this AR process, regulated hazardous constituents and reasonably expected underlying hazardous constituents (UHC)s are also discovered. UHC which is discovered in the annual recharacterisation will be assumed to expected throughout the waste stream. The applicable constituent concentration or technology based treatment standards for the wastes and / or individual hazardous constituents will be identified, if required by regulation, on the LDR generated from this data. The LDRs generated in this process also identify whether the waste must be treated before being land disposed when required by regulation.

AR data is used to update subpart BB and Subpart CC plans (see these plans elsewhere in this permit application). It is anticipated that minor changes in the waste streams are unlikely to significantly change in air emissions.

The Safety-Kleen transportation department is responsible for selecting packaging for Safety-Kleen waste streams, in addition to their responsibility for company compliance with Federal, State, and local transportation regulations and rules. The transportation department has selected packaging based on past waste recharacterizations and continue to review AR and other data to maintain compliance with material packaging requirements.

A.1 DESCRIPTION OF WASTES

Several types of waste result from the servicing of Safety-Kleen customers and the maintenance of the service center. It should be noted that the solvents managed at this facility are incompatible with strong oxidizers and reactive metals, none of which are present in the containers, container storage area, or the concrete sealant. The solvents are also compatible with one another. Analytical data for the wastes and specifications for the products are in Attachment A-1 and qualitative descriptions follow.

A.1.1 Wastes Resulting From the Parts of Washer Service

Used solvents from parts washers is accumulated in a 12,000 gallon underground, double-walled storage tank via the return and fill station. Containers of used material are poured into a dumpster at the return and fill station which in turn empties into the tank. This waste handling method results in several types of solvent waste:

a. Used solvent - The used solvent is removed from the tank by a tanker truck on a scheduled basis. About 5,000 gallons are removed every month. This waste is ignitable (D001) and may exhibit the toxicity characteristic of D004, D005, D006, D007, D008, D009, D010, D011, D018, D019, D021, D022, D023, D024, D025, D026, D027, D028, D029, D030, D032, D033, D034, D035, D036, D037, D038, D039, D040 D041, D042, and D043.

b Bottom sediment in the tank - Approximately once every two years, it is necessary to remove sediment and other heavy material from the bottom of the tank. A Safety-Kleen vacuum truck is generally used for this purpose. The sediment is ignitable (D001) and may exhibit the toxicity characteristic of D004, D005, D006, D007, D008, D009, D010, D011, D018, D019, D021, D022, D023, D024, D025, D026, D027, D028, D029, D030, D032, D033, D034, D035, D036, D037, D038, D039, D040 D041, D042, and D043.

c. Dumpster Sediment - Sediment may also accumulate in the drum washers in the return/fill station. The sediment is manually removed and placed in containers. The dumpster sediment is representative of the waste codes described in items a and b above.

d. Used Aqueous Parts Cleaning Solvent - may be bulked at the service center into containers that meet DOT specifications or may be co-mingled with the other solvent into the used solvent tank. It may be toxic using the toxicity characteristic of D004, D005, D006, D007, D008, D009, D010, D011, D018, D019, D021, D022, D023, D024, D025, D026, D027, D028, D029, D030, D032, D033, D034, D035, D036, D037, D038, D039, D040 D041, D042, and D043.

e. Immersion Cleaner - is a different type of solvent that is not placed in the underground storage tank. Containers of immersion cleaner typically remain in the drum in which it was originally used until it is received at the recycle center. Drums are placed in the drum storage area of the warehouse and are stacked no more than two-high in the drum storage area of the warehouse.

The immersion cleaner is a non-halogenated hydrocarbon mixture and may exhibit the toxic characteristics of D004, D005, D006, D007, D008, D009, D010, D011, D018, D019, D021, D022, D023, D024, D025, D026, D027, D028, D029, D030, D032, D033, D034, D035, D036, D037, D038, D039, D040 D041, D042, and D043.

A.1.2 Wastes Resulting From the Dry Cleaner Service

Dry cleaning wastes consist of used filter cartridges, powder residue from diatomaceous or other powder filter systems and still bottoms. These wastes are packaged on the customer's premises in containers meeting DOT specifications. The containers are then palletized, stacked two-high and placed in the container storage area of the warehouse. Approximately 95% of the dry cleaning solvent used is perchloroethylene (F002 and D004, D005, D006, D007, D008, D009, D010, D011, D018, D019, D021, D022, D023, D024, D025, D026, D027, D028, D029, D030, D032, D033, D034, D035, D036, D037, D038, D039, D040 D041, D042, and D043) and the remaining 5% is trichloro-trifluoroethane (F002) and toxic using the characteristic leaching procedure (D004, D005, D006, D007, D008, D009, D010, D011, D018, D019, D021, D022, D023, D024, D025, D026, D027, D028, D029, D030, D032, D033, D034, D035, D036, D037, D038, D039, D040, D041, D042, and D043).

A.1.3 Wastes Resulting From the Paint Service

Paint wastes consist of various lacquer thinners (D001, F003, and F005) and may be toxic as per the characteristic leaching procedure (D004, D005, D006, D007, D008, D009, D010, D011, D018, D019, D021, D022, D023, D024, D025, D026, D027, D028, D029, D030, D032, D033, D034, D035, D036, D037, D038, D039, D040, D041, D042, and D043). The wastes are collected in containers which meet DOT requirements at the customer's place of business and containers are then palletized and stored in an enclosed concrete masonry building (the H-3 Flammable Storage Building).

A.1.4 Photographic/Imaging Wastes

Some photographic imaging wastes managed by the facility are not solid wastes per 40 CFR 261.2(c) because their hazardous constituent is reclaimed. Others are managed under the provisions of Subpart F of 40 CFR 266 – Recyclable Materials Utilized for Precious Metals Recovery. Imaging waste consists typically of three waste streams. Photo fixer solution is an aqueous solution used to etch photo film during processing. This material is characteristic for silver (D011). Safety-Kleen is able to recover the silver from the solution. Used Photo developer is an aqueous solution that exhibits no hazardous waste characteristics but may not be allowed to discharge into public wastewater treatment systems in some communities. Silver collection canisters are sent to a recycle center for reclamation. These canisters do not meet the definition of a hazardous waste as per 40 CFR 260.30(c) and are managed as a non-regulated material.

A.2 QUALITY CONTROL PROCEDURES

The used solvents are the primary feed stocks for the generation of Safety-Kleen solvent products. As a result, quality control of the used solvents is necessary to ensure that reclamation occurs in the safest and most efficient manner possible. The service center collects used solvents from approximately 1,100 customers, most of who are small quantity generators, and an estimated 14,000 drums containing recoverable solvents are returned to the service center each year for shipment to a reclaimer. With such large numbers of waste generators and waste shipments, performing detailed analyses at the service center is economically and logistically infeasible.

Furthermore, as discussed earlier in the Facility Description, all the materials collected at the service center are managed at all times in a closed loop system and are usually collected from a company with a single process. The composition and quality of these materials are known and Safety-Kleen's operating experiences have shown that the collected materials rarely deviate from company specifications.

As an additional safeguard, Safety-Kleen personnel are instructed to inspect all materials before returning them to the service centers as described in Section A.2.1. This mode of operation has been proven to safeguard the recycling process and maintain a quality product.

However, in accordance with HWMR 206.B.3, Safety-Kleen will perform physical and chemical analysis of a waste stream when it is notified or has reason to believe that the process or operation generating the waste has changed, or when the result of inspection indicates that the waste collected does not match that designated. It is Safety-Kleen's practice that suspected non-conforming material must not be accepted until a full analysis has been conducted. If a container with questionable contents is returned to the service center, a sample will be taken and analysis will be performed at the recycling center, Safety-Kleen Tech Center (Elk Grove Village, Illinois) or other qualified lab according to the procedures outlined in Section A.3 of this attachment. The Branch Manager will be notified of any contamination that may have occurred.

Safety-Kleen trains personnel to verify the physical characteristics of the wastes at several points in the management of the solvent. These procedures are described briefly below.

Safety-Kleen controls the use and management of its solvents by:

1. Limiting the solvents stored to those compatible with one another and their containers;

2. Limiting the uses of each type of solvent for (example, dry cleaning waste is <u>only</u> collected from dry cleaner shops);

3. Determining the customer's type of business (i.e., the SIC code is recorded) and the purpose for which the customer will use the machine;

4. Training customers to use the machines properly;

5. Training employees to inspect the physical characteristics of used solvent and determine whether it is acceptable;

6. When waste is collected from a customer, indicate on the service document whether the used solvent meets Safety-Kleen's acceptance criteria;

7. Marking each container with the customer's name, address, and EPA I.D. number (if available). This information remains on containerized waste until it is accepted at the reclamation facility;

8. Keeping a record of each incoming and outgoing shipment in the operating log; and

Safety-Kleen's customers sign a service document containing the following information:

a. the name, address and EPA I.D. number of the facility to which the waste is being shipped;
b. the customer's name, address and EPA I.D. number (if available); and

c. the description and amount of Safety-Kleen solvent waste generated.

In addition, each incoming and outgoing shipment is recorded in the facility's operating log.

If a waste is rejected at the time of service, the customer will be given a choice as to whether he will dispose of the waste himself or require Safety-Kleen's assistance. If he requests Safety-Kleen's assistance, a sample will be drawn using a Coliwasa tube or similar sampling device to ensure representative samples. The sample will be analyzed for flash point and volatile organic compounds. If

this analysis does not adequately define the constituents, additional analyses will be performed as necessary (e.g., semi-volatile organic compounds, PCBs, etc.).

The laboratory sends waste analyses results to the service center. If through the additional analysis the waste is determined to be acceptable at the branch, it will be relabeled, manifested and then managed with the other wastes. If it is determined through the additional analysis to not be acceptable, the waste will either be: (a) managed at the Service Center on a 10 day transfer basis and manifested to a properly permitted reclamation or disposal facility, or (b) manifested and shipped directly to a properly permitted reclamation or disposal facility. The analytical results from the additional characterization analysis will be used to appropriately manage the waste. The Branch Manager has the right to refuse any further service to a business which has returned waste that does not meet acceptable criteria.

A.2.1 Qualitative Waste Analysis

a. General Inspection Procedures:
Safety-Kleen visually inspects each drum of waste when it is collected at the customer's location. Safety-Kleen examines the waste for volume, appearance, consistency and odor and is intimately familiar with the characteristics of the waste it receives. Based on the known waste characteristics, Safety-Kleen has established the specific acceptance criteria set forth below, to be used by Safety-Kleen personnel in their visual inspections. These inspection procedures allow Safety-Kleen to ensure that the waste being picked up meets appropriate acceptance criteria.

If a particular drum of waste does not meet the acceptance criteria, the Safety-Kleen service representative will either (1) sample the waste for testing at a Safety-Kleen laboratory to determine whether the waste has been contaminated; or (2) reject the waste. In the event the waste is not sampled, Safety-Kleen will notify the generator's State Agency that is authorized to implement the RCRA hazardous waste management program (or EPA if the RCRA program has not been delegated to the State).

If the waste is sampled for further analysis, the service representative will collect a sample, then seal the drum and label it as hazardous waste. The drum is left with the customer pending the results of the laboratory tests. The laboratory testing initially involves analyzing the suspect waste for flash-point and the presence of volatile organic compounds. Pending those results, additional constituents may also be analyzed. The costs of any sampling and testing performed as a result of the waste failing to meet the acceptance criteria, will be borne by the customer.

If the laboratory analysis reveals that the sampled waste is not contaminated, Safety-Kleen will accept the waste from the customer. If the laboratory confirms that the waste is contaminated, the generator will be responsible for securing an alternate means of disposal or they may contract with Safety-Kleen to handle the waste on a ten-day transfer basis.

b. Waste Specific Criteria:
The following is a description of the specific acceptance criteria for each waste stream.

1. Used solvent:

The acceptance criteria for determining by visual inspection whether used solvent has been contaminated are volume, odor and color, the most significant of which is volume. If the volume of waste in a given drum exceeds the specified level, the Safety-Kleen service representative will conduct an inquiry of the customer's operation and handling procedures. Contingent on the customer's responses, the solvent may be accepted, a sample of the waste may

be collected for laboratory testing as described above, or the waste may be rejected.

In addition to the volume criterion, the odor of the used solvent may typically indicate whether the waste has been contaminated. Used solvent has a distinctive odor. The service representatives are expressly instructed not to deliberately sniff the waste. However, if the solvent has been contaminated the service representative may notice a difference in the odor when he services the machine.

The used solvent is also visually inspected for its color. Unused solvent typically has a clear or greenish tint. As the solvent is used, it turns brown in color. The more it is used, the darker brown it becomes, until it is almost black. In the case of a print shop, the solvent may be clear, green, brown, black, or many colors. Therefore, if the used solvent does not appear to be the expected color, the service representative will sample the waste for possible contamination as described above, or will reject the waste.

2. Immersion Cleaner:

The criteria for the inspection of used immersion cleaner are volume and color. If the volume of waste exceeds the specified level a sample will be tested for contamination following the procedures described above or the waste will be rejected.

Unused immersion cleaner is amber in color. As the solvent is used, it turns brown in color. The more it is used, the darker brown it becomes, until it is almost black. If the used immersion cleaner does not appear to be the expected color, the service representative will either sample the waste for possible contamination as described above, or reject the drum of waste.

3. Dry Cleaner Wastes:

Dry cleaner wastes normally consist of used filter cartridges, powder residue, and still bottoms.

a. Used Filter Cartridges:
Used filter cartridges are placed in containers meeting DOT specifications. It is obvious to the service representative whether the items in the drums are filter cartridges. The drums may also contain approximately one inch of liquid which should either be clear or have a light brownish tint. If the amount of the liquid is greater than approximately one inch or if the liquid is a color other than light brown, the service representative will sample the waste for contamination in accordance with the procedures described above, or will reject the waste.

b. Powder Residue:
The criteria for the acceptance of powder residue are consistency and color, the former being the more significant criterion of the two. A drum of powder residue should not contain any liquid. As the name implies, it will be dry or "powdery". If there is any liquid in the drum, the waste will be sampled for contamination in accordance with the procedures described above, or the waste will be rejected.

The powder residue is also inspected for color and should appear to be grayish-black. If the residue is not grayish-black in color, the service representative will sample the waste for contamination in accordance with the procedures described above, or will reject the waste.

c. Still Bottoms:
The criteria for the acceptance of dry cleaning still bottoms are consistency and color. The waste should have a highly viscous, tar-like consistency. If the consistency of the waste is too thin or if there is more than one inch of free liquid in the drum, the waste will be sampled for contamination in accordance with the procedures described above, or will be rejected.

In addition to consistency, the still bottom waste is inspected for color. The waste should appear dark brown or black in color. If the waste is a different color, a service representative will sample the waste for contamination in accordance with the procedures described above, or will reject the waste.

4. Paint Wastes:

Safety-Kleen handles both lacquer thinner waste generated from the paint gun cleaning process and paint waste.

a. Lacquer Thinner Waste:
The significant criterion for determining whether lacquer thinner waste will be accepted is volume. The solvent is provided to customers in pails which meet DOT requirements. The paint gun cleaning machine operates as a closed system where by there should never be a combined volume of more than the expected amount of solvent in the two collection pails. The solvent is pumped from a tube in a left hand pail (facing the machine) through the machine into the right hand pail. The left hand pail starts with clean solvent which will be pumped out as the machine is used to clean the spray guns. If a service representative discovers more than the expected amount of solvent in the two pails, or there is an overfill from the right hand pail, the waste will be sampled for contamination in accordance with the procedures described above, or the waste will be rejected.

b. Paint Waste:

b.1 Liquid
The significant criterion for the inspection of paint waste is consistency. The waste should contain no more than 30 percent solids. The service representative will insert a Colliwasa or similar sampling device into the drum. The sampling device should glide easily down to the bottom of the drum. The service representative will handle this waste as a Class 3 flammable waste. If there is resistance to the insertion of the glass tube, it is assumed that the level of solids is in excess of 30 percent and the service representative will reject the waste.

The contents of the glass tube are also visually examined for consistency and water content. The material should be a "free flowing" liquid, but should not contain a significant amount of water. If there is more than approximately 10 inches of water in the 3 foot tube (the water and paint will separate in the tube and thus can be measured) the waste will be rejected.

b.2 Solid:

For waste containing more than 30 percent solids the service representative will handle the waste as a Class 4 flammable waste.

5. Photographic/Imaging Waste

Photographic/Imaging waste is collected from facilities where one process is managed and the possibility of cross contamination is minimal. The sales representative inspects the contents of the containers of photographic/imaging waste when the sales representative services the customer. The pH and silver content of the waste is checked at the time of service, and the waste is also inspected visually.

A.3 WASTE ANALYSES AT THE RECYCLE CENTER

Analyses performed at the Safety-Kleen recycle centers are undertaken to safeguard the recycling process and to assure a product quality. The following section summarizes the waste analyses practiced at the recycle center for the hazardous materials returned form the Albuquerque branch. For each waste type stored at the branch, at least the following analyses must be performed annually (annual re-characterization analysis). If a particular waste stream is not managed at the service center during the previous year, no re-characterization analysis is performed. Copies of the results for the annual analyses must be maintained at the branch office for the life of the permit. A copy of the most recent re-characterization analysis is contained in Attachment A-1.

A.3.1 Solvents

- Flash point (must be greater than 90°F).

If the flashpoint is unacceptable, the Albuquerque Branch Manager will be notified immediately and the load will receive appropriate special handling. If the results are acceptable, the following tests will be performed:

- Volatile Organic Analysis, using EPA Methods 8015, 8021, 8260, or approved equivalents.
- Physical appearance, including bottom sediment and water content
- Specific gravity
- pH
- Distillation performance

If any of these tests yield unacceptable results or indicate solvent contamination outside the normal range, the Branch Manager will be notified immediately.

In addition to the tests listed above, which will be performed on a representative sample from every load received at the recycle center from the Albuquerque service center, a full Toxicology Characteristic Leaching Procedure (TCLP) analysis for all 40 constituents, (except for pesticides and herbicides) will be performed at least once each calendar year.

A.3.2 Solvent Tank Bottom Sludge and Free Water

- Flash point (Must be greater than 90°F).
- Analysis for content of lead, cadmium, and chromium.
- pH

As described above for solvent, a full TCLP analysis (except for the pesticides and herbicides) will be performed on a representative sample at least once each calendar year.

A.3.3 Immersion Cleaner Solvent

Containers of waste immersion cleaner are typically characterized at the recycle center using the following criteria:

- Flash point
- Physical appearance
- Specific gravity
- Percent water
- Volatile Organic Analysis (using EPA methods 8015, 8021, 8260 or approved equivalents)

If any of these tests yield unacceptable results or indicate solvent contamination outside the normal range, the Branch Manager will be notified immediately. As described above, a full TCLP test (except for pesticides and herbicides) will be performed on a representative sample of immersion cleaner at least once each calendar year.

A.3.4 Dry Cleaning Solvent/Still Bottoms

- Physical appearance
- Volatile Organic Analysis for Perchlorothylene (using EPA methods 8015, 8021, 8260 or approved equivalents)
- Specific gravity

If any of these tests yield unacceptable results or indicate contamination outside the normal range, the Branch Manager will be notified immediately.

As described above, a full TCLP test (except for pesticides and herbicides) will be performed on a representative sample of dry cleaning waste at least once each calendar year.

A.3.5 Paint Waste

Paint wastes are generally characterized at the recycle center using the following criteria:

- Metals
- Flash points
- Physical appearance
- Specific gravity
- Percent water
- Volatile organic analysis (using EPA methods 8015, 8021, 8260, or approved equivalents)

As described above, a full TCLP test (except for pesticides and herbicides) will be performed on a representative sample of paint waste at least once each calendar year.

A.4 WASTE ANALYSIS PLAN UPDATE

This waste analysis plan will be modified when a new waste product is collected or when sampling and material management methods change. Revision of the plan is typically the responsibility of the Safety-Kleen corporate or regional compliance offices.

A.5 LAND BAN NOTIFICATION/CERTIFICATION FORMS

In accordance with 40 CFR 268.7(a)(2), Safety-Kleen provides a one time written notice for wastes banned for land disposal with the initial shipment. No further notification is necessary unless the waste changes. Safety-Kleen will provide the written notice for wastes banned from landfills as follows:

1. Printing the Notice language on manifests - such as for core-business customers to branch shipments; or
2. Special forms for each regularly handled waste types (e.g., parts washer solvents, immersion cleaner, dry cleaning wastes, etc); or
3. A general form that must be completed for unique or non-standard waste streams. These wastes will only be handled on a transfer basis in accordance with 40 CFR 263.12.

The notice is required paperwork for all Safety-Kleen waste types. Shipments lacking the proper Notice will not be accepted by any Safety-Kleen facility. When a shipment with the proper Notice is received, the notice is kept in the files of the receiving facility with the manifest or with the pre-print if a manifest is not used.

A.6 OPERATING LOG RECORD

Safety-Kleen maintains an operating log record on site which includes the following information as it becomes available:

1. A description and the quantity of each hazardous waste received, and the method and date of its storage as required by Pt. V. Sec. 264, Appendix I;

2. The location of hazardous waste within the facility and quantity;

3. Records and results of waste analyses performed;

4. Summary reports and details of all incidents that require implementing the contingency plan;

5. Records and results of inspections;

6. Monitoring, testing or analytical data and corrective action where required;

7. For off-site facilities, Notices to generators as specified in 264.12(b);

8. Closure and post-closure cost estimates;

9. A certification by the permittee no less often than annually, that the permittee has a program in place to reduce the volume and toxicity of hazardous waste; and

10. The land ban notices and requirements. These records are kept on file at the facility.

A.7 WASTE DETERMINATION FOR SUBPART BB AND CC COMPLIANCE

For purposes of waste determination, this facility utilizes knowledge of the wastes described in Section A.1, A.2 and A.3 above. For those hazardous wastes which are managed on a transfer basis, the Subpart CC regulation does not apply. However, the owner/operator may use knowledge of the waste based on information included in manifests, shipping papers, or waste certification notices to confirm waste determination for the generator or the ultimate receiving facility.

Based upon this knowledge, it has been determined that all wastes managed in tanks or containers at this facility may display an average volatile organic concentration of greater than 500 ppmw at the point of waste origination. Documentation of this knowledge is provided in Attachment A-1 (waste characterization analytical results), as required in 40 CFR 264.1063(d) and 264.1083. Therefore, hazardous wastes managed in tanks or containers at this facility shall be managed in accordance with the applicable Subpart CC standards.

WASTE ANALYSIS PLAN

WASTE ANALYSIS PLAN

ABSTRACT

Waste Description	EPA Waste Code No.	Facility Capacity[1] (gallons)	Annual Amount[2]
Spent Solvents	D001[3]	12,000	50
Bottom Sediment From the Tank and Ancillary Equipment	D001[3]	N/A	2
Spent Immersion Cleaner	D001[3]	4,464	3
Dry Cleaning Waste	D001, F002[3]	6	
Paint Waste	F003, F005, D001[3]	4,464	
Photo Chemical Wastes	D011	4,464	

NOTES: 1 The facility capacity is in gallons.
2 The annual amount is in thousands of gallons.
3 and may also include D004, D005, D006, D007, D008, D009, D010, D011, D018, D019, D021, D022, D023, D024, D025, D026, D027, D028, D029, D030, D032, D033 D034, D035, D036, D037, D038, D039, D040, D041, D042, and D043
4 The total amount of drummed waste stored in the warehouse will not exceed 3,820 gallons.

The Facility shall store only wastes it is authorized to store. That is, Safety-Kleen will only store wastes included in Part A of the application for hazardous waste permit and not otherwise prohibited by the permit. Safety-Kleen will not store any hazardous waste for more than one year.

These waste streams are characterized annually as described in the "Statistical Analysis of Annual Waste Characterization Data", attached and incorporated herein by reference. (The most recent data are also included.) The testing and sampling methodology is as described in A.3, below. The data generated in this process is used to assign waste codes, if any, for each waste stream. The data generated in the annual recharacterization (AR) is also used to assist recycle centers in recycling or treating the waste streams. Recycle centers also rely on their own waste analysis plans to generate data to recycle materials and or dispose of waste. If while providing service to a customer if there is suspicion that the waste does not meet the acceptance criteria, the waste will not be picked up and the customer must provide information explaining what is in the waste and how the waste was adulterated. Please see the text below in this waste analysis plan.

Providing service to Safety-Kleen customers is dependent on a review of the customer business. If the business is a typical generator of that waste stream (for example, a garage generating parts washer waste), then limited review is performed. If the business is not a typical generator of that waste stream or if the business has other processes on site, a more detailed review of the business is performed and a certification from the customer is required stating the waste will be as described without adulterants. For example, laboratory analysis of that customer's waste may be required.

In this AR process, regulated hazardous constituents and reasonably expected underlying hazardous constituents (UHC)s are also discovered. UHC which is discovered in the annual recharacterisation will be assumed to expected throughout the waste stream. The applicable constituent concentration or technology based treatment standards for the wastes and / or individual hazardous constituents will be identified, if required by regulation, on the LDR

generated from this data. The LDRs generated in this process also identify whether the waste must be treated before being land disposed when required by regulation.

AR data is used to update subpart BB and Subpart CC plans (see these plans elsewhere in this permit application). It is anticipated that minor changes in the waste streams are unlikely to significantly change in air emissions.

Recycle centers test every shipment of waste for PCBs. If a shipment is discovered to contain PCBs, the source of the PCBs is traced and appropriate 40 CFR 761 requirements are implemented. Any equipment contaminated by PCBs is removed from service decontaminated cleaned before being put into service.

The Safety-Kleen transportation department is responsible for selecting packaging for Safety-Kleen waste streams, in addition to their responsibility for company compliance with Federal, State, and local transportation regulations and rules. The transportation department has selected packaging based on past waste recharacterizations and continue to review AR and other data to maintain compliance with material packaging requirements.

A.1 DESCRIPTION OF WASTES

Several types of waste result from the servicing of Safety-Kleen customers and the maintenance of the service center. It should be noted that the solvents managed at this facility are incompatible with strong oxidizers and reactive metals, none of which are present in the containers, container storage area, or the concrete sealant. The solvents are also compatible with one another. Analytical data for the wastes and specifications for the products are in Attachment A-1 and qualitative descriptions follow.

A.1.1 Wastes Resulting From the Parts of Washer Service

Used solvents from parts washers is accumulated in a 12,000 gallon underground, double-walled storage tank via the return and fill station. Containers of used material are poured into a dumpster at the return and fill station which in turn empties into the tank. This waste handling method results in several types of solvent waste:

a. Used solvent - The used solvent is removed from the tank by a tanker truck on a scheduled basis. About 5,000 gallons are removed every month. This waste is ignitable (D001) and may exhibit the toxicity characteristic of D004, D005, D006, D007, D008, D009, D010, D011, D018, D019, D021, D022, D023, D024, D025, D026, D027, D028, D029, D030, D032, D033, D034, D035, D036, D037, D038, D039, D040 D041, D042, and D043.

b Bottom sediment in the tank - Approximately once every two years, it is necessary to remove sediment and other heavy material from the bottom of the tank. A Safety-Kleen vacuum truck is generally used for this purpose. The sediment is ignitable (D001) and may exhibit the toxicity characteristic of D004, D005, D006, D007, D008, D009, D010, D011, D018, D019, D021, D022, D023, D024, D025, D026, D027, D028, D029, D030, D032, D033, D034, D035, D036, D037, D038, D039, D040 D041, D042, and D043.

c. Dumpster Sediment - Sediment may also accumulate in the drum washers in the return/fill station. The sediment is manually removed and placed in containers. The dumpster sediment is representative of the waste codes described in items a and b above.

d. Used Aqueous Parts Cleaning Solvent - may be bulked at the service center into containers that meet DOT specifications or may be co-mingled with the other solvent into the used solvent tank. It may be toxic using the toxicity characteristic of D004, D005, D006, D007, D008, D009, D010, D011, D018, D019, D021, D022, D023, D024, D025, D026, D027, D028, D029, D030, D032, D033, D034, D035, D036, D037, D038, D039, D040 D041, D042, and D043.

e. Immersion Cleaner - is a different type of solvent that is not placed in the underground storage tank. Containers of immersion cleaner typically remain in the drum in which it was originally used until it is received at the recycle center. Drums are placed in the drum storage area of the warehouse and are stacked no more than two-high in the drum storage area of the warehouse.

The immersion cleaner is a non-halogenated hydrocarbon mixture and may exhibit the toxic characteristics of D004, D005, D006, D007, D008, D009, D010, D011, D018, D019, D021, D022, D023, D024, D025, D026, D027, D028, D029, D030, D032, D033, D034, D035, D036, D037, D038, D039, D040 D041, D042, and D043.

A.1.2 Wastes Resulting From the Dry Cleaner Service

Dry cleaning wastes consist of used filter cartridges, powder residue from diatomaceous or other powder filter systems and still bottoms. These wastes are packaged on the customer's premises in containers meeting DOT specifications. The containers are then palletized, stacked two-high and placed in the container storage area of the warehouse. Approximately 95% of the dry cleaning solvent used is perchloroethylene (F002 and D004, D005, D006, D007, D008, D009, D010, D011, D018, D019, D021, D022, D023, D024, D025, D026, D027, D028, D029, D030, D032, D033, D034, D035, D036, D037, D038, D039, D040 D041, D042, and D043) and the remaining 5% is trichloro-trifluoroethane (F002) and toxic using the characteristic leaching procedure (D004, D005, D006, D007, D008, D009, D010, D011, D018, D019, D021, D022, D023, D024, D025, D026, D027, D028, D029, D030, D032, D033, D034, D035, D036, D037, D038, D039, D040, D041, D042, and D043).

A.1.3 Wastes Resulting From the Paint Service

Paint wastes consist of various lacquer thinners (D001, F003, and F005) and may be toxic as per the characteristic leaching procedure (D004, D005, D006, D007, D008, D009, D010, D011, D018, D019, D021, D022, D023, D024, D025, D026, D027, D028, D029, D030, D032, D033, D034, D035, D036, D037, D038, D039, D040, D041, D042, and D043). The wastes are collected in containers which meet DOT requirements at the customer's place of business and containers are then palletized and stored in an enclosed concrete masonry building (the H-3 Flammable Storage Building).

A.1.4 Photographic/Imaging Wastes

Some photographic imaging wastes managed by the facility are not solid wastes per 40 CFR 261.2(c) because their hazardous constituent is reclaimed. Others are managed under the provisions of Subpart F of 40 CFR 266 – Recyclable Materials Utilized for Precious Metals Recovery. Imaging waste consists typically of three waste streams. Photo fixer solution is an aqueous solution used to etch photo film during processing. This material is characteristic for silver (D011). Safety-Kleen is able to recover the silver from the solution. Used Photo developer is an aqueous solution that exhibits no hazardous waste characteristics but may not be allowed to discharge into public wastewater treatment systems in some communities. Silver collection canisters are sent to a recycle center for reclamation. These canisters do not meet the definition of a hazardous waste as per 40 CFR 260.30(c) and are managed as a non-regulated material.

A.2 QUALITY CONTROL PROCEDURES

The used solvents are the primary feed stocks for the generation of Safety-Kleen solvent products. As a result, quality control of the used solvents is necessary to ensure that reclamation occurs in the safest and most efficient manner possible. The service center collects used solvents from approximately 1,100 customers, most of who are small quantity generators, and an estimated 14,000 drums containing recoverable solvents are returned to the service center each year for shipment to a reclaimer. With such large numbers of waste generators and waste shipments, performing detailed analyses at the service center is economically and logistically infeasible.

Furthermore, as discussed earlier in the Facility Description, all the materials collected at the service center are managed at all times in a closed loop system and are usually collected from a company with a single process. The composition and quality of these materials are known and Safety-Kleen's operating experiences have shown that the collected materials rarely deviate from company specifications. As an additional safeguard, Safety-Kleen personnel are instructed to inspect all materials before returning them to the service centers as described in Section A.2.1. This mode of operation has been proven to safeguard the recycling process and maintain a quality product.

However, in accordance with HWMR 206.B.3, Safety-Kleen will perform physical and chemical analysis of a waste stream when it is notified or has reason to believe that the process or operation generating the waste has changed, or when the result of inspection indicates that the waste collected does not match that designated. It is Safety-Kleen's practice that suspected non-conforming material must not be accepted until a full analysis has been

conducted. If a container with questionable contents is returned to the service center, a sample will be taken and analysis will be performed at the recycling center, Safety-Kleen Tech Center (Elk Grove Village, Illinois) or other qualified lab according to the procedures outlined in Section A.3 of this attachment. The Branch Manager will be notified of any contamination that may have occurred.

Safety-Kleen trains personnel to verify the physical characteristics of the wastes at several points in the management of the solvent. These procedures are described briefly below.

Safety-Kleen controls the use and management of its solvents by:

1. Limiting the solvents stored to those compatible with one another and their containers;

2. Limiting the uses of each type of solvent for (example, dry cleaning waste is <u>only</u> collected from dry cleaner shops);

3. Determining the customer's type of business (i.e., the SIC code is recorded) and the purpose for which the customer will use the machine;

4. Training customers to use the machines properly;

5. Training employees to inspect the physical characteristics of used solvent and determine whether it is acceptable;

6. When waste is collected from a customer, indicate on the service document whether the used solvent meets Safety-Kleen's acceptance criteria;

7. Marking each container with the customer's name, address, and EPA I.D. number (if available). This information remains on containerized waste until it is accepted at the reclamation facility;

8. Keeping a record of each incoming and outgoing shipment in the operating log; and

Safety-Kleen's customers sign a service document containing the following information:

a. the name, address and EPA I.D. number of the facility to which the waste is being shipped;
b. the customer's name, address and EPA I.D. number (if available); and

c. the description and amount of Safety-Kleen solvent waste generated.

In addition, each incoming and outgoing shipment is recorded in the facility's operating log.

If a waste is rejected at the time of service, the customer will be given a choice as to whether he will dispose of the waste himself or require Safety-Kleen's assistance. If he requests Safety-Kleen's assistance, a sample will be drawn using a Coliwasa tube or similar sampling device to ensure representative samples. The sample will be analyzed for flash point and volatile organic compounds. If this analysis does not adequately define the constituents, additional analyses will be performed as necessary (e.g., semi-volatile organic compounds, PCBs, etc.).

The laboratory sends waste analyses results to the service center. If through the additional analysis the waste is determined to be acceptable at the branch, it will be relabeled, manifested and then managed with the other wastes. If it is determined through the additional analysis to not be acceptable, the waste will either be: (a) managed at the Service Center on a 10 day transfer basis and manifested to a properly permitted reclamation or disposal facility, or (b) manifested and shipped directly to a properly permitted reclamation or disposal facility. The analytical results from the additional characterization analysis will be used to appropriately manage the waste. The Branch Manager has the right to refuse any further service to a business which has returned waste that does not meet acceptable criteria.

A.2.1 Qualitative Waste Analysis

a. General Inspection Procedures:
Safety-Kleen visually inspects each drum of waste when it is collected at the customer's location. Safety-Kleen examines the waste for volume, appearance, consistency and odor and is intimately familiar with the characteristics of the waste it receives. Based on the known waste characteristics, Safety-Kleen has established the specific acceptance criteria set forth below, to be used by Safety-Kleen personnel in their visual inspections. These inspection procedures allow Safety-Kleen to ensure that the waste being picked up meets appropriate acceptance criteria.

If a particular drum of waste does not meet the acceptance criteria, the Safety-Kleen service representative will either (1) sample the waste for testing at a Safety-Kleen laboratory to determine whether the waste has been contaminated; or (2) reject the waste. In the event the waste is not sampled, Safety-Kleen will notify the generator's State Agency that is authorized to implement the RCRA hazardous waste management program (or EPA if the RCRA program has not been delegated to the State).

If the waste is sampled for further analysis, the service representative will collect a sample, then seal the drum and label it as hazardous waste. The drum is left with the customer pending the results of the laboratory tests. The laboratory testing initially involves analyzing the suspect waste for flash-point and the presence of volatile organic compounds. Pending those results, additional constituents may also be analyzed. The costs of any sampling and testing performed as a result of the waste failing to meet the acceptance criteria, will be borne by the customer.

If the laboratory analysis reveals that the sampled waste is not contaminated, Safety-Kleen will accept the waste from the customer. If the laboratory confirms that the waste is contaminated, the generator will be responsible for securing an alternate means of disposal or they may contract with Safety-Kleen to handle the waste on a ten-day transfer basis.

b. Waste Specific Criteria:
The following is a description of the specific acceptance criteria for each waste stream.

1. Used solvent:

The acceptance criteria for determining by visual inspection whether used solvent has been contaminated are volume, odor and color, the most significant of which is volume. If the volume of waste in a given drum exceeds the specified level, the Safety-Kleen service representative will conduct an inquiry of the customer's operation and handling procedures. Contingent on the customer's responses, the solvent may be accepted, a sample of the waste may be collected for laboratory testing as described above, or the waste may be rejected.

In addition to the volume criterion, the odor of the used solvent may typically indicate whether the waste has been contaminated. Used solvent has a distinctive odor. The service representatives are expressly instructed not to deliberately sniff the waste. However, if the solvent has been contaminated the service representative may notice a difference in the odor when he services the machine.

The used solvent is also visually inspected for its color. Unused solvent typically has a clear or greenish tint. As the solvent is used, it turns brown in color. The more it is used, the darker brown it becomes, until it is almost black. In the case of a print shop, the solvent may be clear, green, brown, black, or many colors. Therefore, if the used solvent does not appear to be the expected color, the service representative will sample the waste for possible contamination as described above, or will reject the waste.

2. Immersion Cleaner:

The criteria for the inspection of used immersion cleaner are volume and color. If the volume of waste exceeds the specified level a sample will be tested for contamination following the procedures described above or the waste will be rejected.

Unused immersion cleaner is amber in color. As the solvent is used, it turns brown in color. The more it is used, the darker brown it becomes, until it is almost black. If the used immersion cleaner does not appear to be the expected color, the service representative will either sample the waste for possible contamination as described above, or reject the drum of waste.

3. Dry Cleaner Wastes:

Dry cleaner wastes normally consist of used filter cartridges, powder residue, and still bottoms.

a. Used Filter Cartridges:
Used filter cartridges are placed in containers meeting DOT specifications. It is obvious to the service representative whether the items in the drums are filter cartridges. The drums may also contain approximately one inch of liquid which should either be clear or have a light brownish tint. If the amount of the liquid is greater than approximately one inch or if the liquid is a color other than light brown, the service representative will sample the waste for contamination in accordance with the procedures described above, or will reject the waste.

b. Powder Residue:
The criteria for the acceptance of powder residue are consistency and color, the former being the more significant criterion of the two. A drum of powder residue should not contain any liquid. As the name implies, it will be dry or "powdery". If there is any liquid in the drum, the waste will be sampled for contamination in accordance with the procedures described above, or the waste will be rejected.

The powder residue is also inspected for color and should appear to be grayish-black. If the residue is not grayish-black in color, the service representative will sample the waste for contamination in accordance with the procedures described above, or will reject the waste.

c. Still Bottoms:
The criteria for the acceptance of dry cleaning still bottoms are consistency and color. The waste should have a highly viscous, tar-like consistency. If the consistency of the waste is too thin or if there is more than one inch of free liquid in the drum, the waste will be sampled for contamination in accordance with the procedures described above, or will be rejected.

In addition to consistency, the still bottom waste is inspected for color. The waste should appear dark brown or black in color. If the waste is a different color, a service representative will sample the waste for contamination in accordance with the procedures described above, or will reject the waste.

4. Paint Wastes:

Safety-Kleen handles both lacquer thinner waste generated from the paint gun cleaning process and paint waste.

a. Lacquer Thinner Waste:
The significant criterion for determining whether lacquer thinner waste will be accepted is volume. The solvent is provided to customers in pails which meet DOT requirements. The paint gun cleaning machine operates as a closed system where by there should never be a combined volume of more than the expected amount of solvent in the two collection pails. The solvent is pumped from a tube in a left hand pail (facing the machine) through the machine into the right hand pail. The left hand pail starts with clean solvent which will be pumped out as the machine is used to clean the spray guns. If a service representative discovers more than the expected amount of solvent in the two pails, or there is an overfill from the right hand pail, the waste will be sampled for contamination in accordance with the procedures described above, or the waste will be rejected.

b. Paint Waste:

b.1 Liquid
The significant criterion for the inspection of paint waste is consistency. The waste should contain no more than 30 percent solids. The service representative will insert a Colliwasa or similar sampling device into the drum. The sampling device should glide easily down to the bottom of the drum. The service representative will handle this waste as a Class 3 flammable waste. If there is resistance to the insertion of the glass tube, it is assumed that the level of solids is in excess of 30 percent and the service representative will reject the waste.

The contents of the glass tube are also visually examined for consistency and water content. The material should be a "free flowing" liquid, but should not contain a significant amount of water. If there is more than approximately 10 inches of water in the 3 foot tube (the water and paint will separate in the tube and thus can be measured) the waste will be rejected.

b.2 Solid:
For waste containing more than 30 percent solids the service representative will handle the waste as a Class 4 flammable waste.

5. Photographic/Imaging Waste

Photographic/Imaging waste is collected from facilities where one process is managed and the possibility of cross contamination is minimal. The sales representative inspects

the contents of the containers of photographic/imaging waste when the sales representative services the customer. The pH and silver content of the waste is checked at the time of service, and the waste is also inspected visually.

A.3 WASTE ANALYSES AT THE RECYCLE CENTER OR QUALIFIED LABORATORY

Analyses performed at the Safety-Kleen recycle centers are undertaken to safeguard the recycling process and to assure a product quality. The following section summarizes the waste analyses practiced at the recycle center for the hazardous materials returned form the Albuquerque branch. For each waste type stored at the branch, at least the following analyses must be performed annually (annual re-characterization analysis). If a particular waste stream is not managed at the service center during the previous year, no re-characterization analysis is performed. Copies of the results for the annual analyses must be maintained at the branch office for the life of the permit. A copy of the most recent re-characterization analysis is contained in Attachment A-1.

A.3.1 Solvents

- Flash point (must be greater than 90°F).

If the flashpoint is unacceptable, the Albuquerque Branch Manager will be notified immediately and the load will receive appropriate special handling. If the results are acceptable, the following tests will be performed:

- Volatile Organic Analysis, using EPA Methods 8015, 8021, 8260, or approved equivalents.
- Physical appearance, including bottom sediment and water content
- Specific gravity
- pH
- Distillation performance

If any of these tests yield unacceptable results or indicate solvent contamination outside the normal range, the Branch Manager will be notified immediately.

In addition to the tests listed above, which will be performed on a representative sample from every load received at the recycle center from the Albuquerque service center, a full Toxicology Characteristic Leaching Procedure (TCLP) analysis for all 40 constituents, (except for pesticides and herbicides) will be performed at least once each calendar year.

A.3.2 Solvent Tank Bottom Sludge and Free Water

- Flash point (Must be greater than 90°F).
- Analysis for content of lead, cadmium, and chromium.
- pH

As described above for solvent, a full TCLP analysis (except for the pesticides and herbicides) will be performed on a representative sample at least once each calendar year.

A.3.3 Immersion Cleaner Solvent

Containers of waste immersion cleaner are typically characterized at the recycle center using the following criteria:

- Flash point
- Physical appearance
- Specific gravity
- Percent water
- Volatile Organic Analysis (using EPA methods 8015, 8021, 8260 or approved equivalents)

If any of these tests yield unacceptable results or indicate solvent contamination outside the normal range, the Branch Manager will be notified immediately. As described above, a full TCLP test (except for pesticides and herbicides) will be performed on a representative sample of immersion cleaner at least once each calendar year.

A.3.4 Dry Cleaning Solvent/Still Bottoms

- Physical appearance
- Volatile Organic Analysis for Perchlorothylene (using EPA methods 8015, 8021, 8260 or approved equivalents)
- Specific gravity

If any of these tests yield unacceptable results or indicate contamination outside the normal range, the Branch Manager will be notified immediately.

As described above, a full TCLP test (except for pesticides and herbicides) will be performed on a representative sample of dry cleaning waste at least once each calendar year.

A.3.5 Paint Waste

Paint wastes are generally characterized at the recycle center using the following criteria:

- Metals
- Flash points
- Physical appearance
- Specific gravity
- Percent water
- Volatile organic analysis (using EPA methods 8015, 8021, 8260, or approved equivalents)

As described above, a full TCLP test (except for pesticides and herbicides) will be performed on a representative sample of paint waste at least once each calendar year.

A.4 WASTE ANALYSIS PLAN UPDATE

This waste analysis plan will be modified when a new waste product is collected or when sampling and material management methods change. Revision of the plan is typically the responsibility of the Safety-Kleen corporate or regional compliance offices.

A.5 LAND BAN NOTIFICATION/CERTIFICATION FORMS

In accordance with 40 CFR 268.7(a)(2), Safety-Kleen provides a one time written notice for wastes banned for land disposal with the initial shipment. No further notification is necessary unless the waste changes. Safety-Kleen will provide the written notice for wastes banned from landfills as follows:

1. Printing the Notice language on manifests - such as for core-business customers to branch shipments; or

2. Special forms for each regularly handled waste types (e.g., parts washer solvents, immersion cleaner, dry cleaning wastes, etc); or
3. A general form that must be completed for unique or non-standard waste streams. These wastes will only be handled on a transfer basis in accordance with 40 CFR 263.12.

The notice is required paperwork for all Safety-Kleen waste types. Shipments lacking the proper Notice will not be accepted by any Safety-Kleen facility. When a shipment with the proper Notice is received, the notice is kept in the files of the receiving facility with the manifest or with the pre-print if a manifest is not used.

A.6 OPERATING LOG RECORD

Safety-Kleen maintains an operating log record on site which includes the following information as it becomes available:

1. A description and the quantity of each hazardous waste received, and the method and date of its storage as required by Pt. V. Sec. 264, Appendix I;

2. The location of hazardous waste within the facility and quantity;

3. Records and results of waste analyses performed;

4. Summary reports and details of all incidents that require implementing the contingency plan;

5. Records and results of inspections;

6. Monitoring, testing or analytical data and corrective action where required;

7. For off-site facilities, Notices to generators as specified in 264.12(b);

8. Closure and post-closure cost estimates;

9. A certification by the permittee no less often than annually, that the permittee has a program in place to reduce the volume and toxicity of hazardous waste; and

10. The land ban notices and requirements. These records are kept on file at the facility.

A.7 WASTE DETERMINATION FOR SUBPART BB AND CC COMPLIANCE

For purposes of waste determination, this facility utilizes knowledge of the wastes described in Section A.1, A.2 and A.3 above. For those hazardous wastes which are managed on a transfer basis, the Subpart CC

regulation does not apply. However, the owner/operator may use knowledge of the waste based on information included in manifests, shipping papers, or waste certification notices to confirm waste determination for the generator or the ultimate receiving facility.

Based upon this knowledge, it has been determined that all wastes managed in tanks or containers at this facility may display an average volatile organic concentration of greater than 500 ppmw at the point of waste origination. Documentation of this knowledge is provided in Attachment A-1 (waste characterization analytical results), as required in 40 CFR 264.1063(d) and 264.1083. Therefore, hazardous wastes managed in tanks or containers at this facility shall be managed in accordance with the applicable Subpart CC standards.

ATTACHMENT A-1

ANNUAL RE-CHARACTERIZATION DATA

K54474-R5732 SAFETY-KLEEN 02/14/03 PAGE: 1
LOCATION: LDR NOTIFICATION FORM 16:30:14

GENERATOR NAME:

MANIFEST NO.:
OR SALES SERVICE NO.: 0

CUST#: 0000000000

PURSUANT TO 40 CFR 268.7(A), I HEREBY NOTIFY THAT THIS SHIPMENT CONTAINS WASTE RESTRICTED UNDER 40 CFR PART 268 LAND DISPOSAL RESTRICTIONS (LDR).

A. GENERAL WASTE NOTIFICATION

LDR FORM LINE NO.: 1 MANIFEST PAGE/LINE# 01A SK PROFILE NO.: 0000
SKDOT#: 0011656

EPA WASTE CODES & LDR SUBCATEGORIES (IF ANY):
D001 ICW IGNITABLE CHARACTERISTIC WASTE
D039

TREATABILITY GROUP: NONWASTEWATERS

WASTE CONSITITUENT NOTIFICATION:
100 O-CRESOL
101 M-CRESOL (DIFFICULT TO DISTINGUISH FROM P-CRESOL)
229 TETRACHLOROETHYLENE
237 TRICHLOROETHYLENE
250 CADMIUM
251 CHROMIUM (TOTAL)
255 LEAD
260 SILVER

==========

----------N O T E S----------

EXP NOTICE: THIS LDR EXPIRES ON 12/31/2003.

GENERATOR'S AUTHORIZED SIGNATURE | NAME & TITLE (PRINTED OR TYPED) | DATE ___/___/___

SEQ#: 3664833 LOC: 0 TERR: REF#: 0 SW:

TOP COPY: GENERATOR MIDDLE COPY: FACILITY BOTTOM COPY: TRANSFE

safety-kleen®

FACSIMILE TRANSMITTAL SHEET

TO: Dave	FROM: Kim
COMPANY:	DATE:
FAX NUMBER: 623-321-1098	TOTAL NO. OF PAGES INCLUDING COVER: 4
PHONE NUMBER:	SENDER
RE:	YOUR REFERENCE NUMBER: FAX # 505-327-3023

☐ URGENT ☐ FOR REVIEW ☐ PLEASE COMMENT ☐ PLEASE REPLY ☐ PLEASE RECYCLE

NOTES/COMMENTS:

LDR's

4210 A HAWKINS ROAD FARMINGTON, NM 87401 505/327-9070

PRINTED ON RECYCLED PAPER

K54474-R5732 SAFETY-KLEEN 02/14/03 PAGE: 1
LOCATION: LDR NOTIFICATION FORM 16:30:14

GENERATOR NAME:

MANIFEST NO.:
OR SALES SERVICE NO.: 0

CUST#: 0000000000

PURSUANT TO 40 CFR 268.7(A), I HEREBY NOTIFY THAT THIS SHIPMENT CONTAINS WASTE RESTRICTED UNDER 40 CFR PART 268 LAND DISPOSAL RESTRICTIONS (LDR).

A. GENERAL WASTE NOTIFICATION

LDR FORM LINE NO.: 1 MANIFEST PAGE/LINE# 01A SK PROFILE NO.: 0000
SKDOT#: 0012674

EPA WASTE CODES & LDR SUBCATEGORIES (IF ANY):
F005
F003
D001
D018
D035
D036
D038
D039
D040

TREATABILITY GROUP: NONWASTEWATERS

WASTE CONSITITUENT NOTIFICATION:
100 O-CRESOL
101 M-CRESOL (DIFFICULT TO DISTINGUISH FROM P-CRESOL)
102 P-CRESOL (DIFFICULT TO DISTINGUISH FROM M-CRESOL)
118 P-DICHLOROBENZENE
121 1.2-DICHLOROETHANE
122 1.1-DICHLOROETHYLENE
124 2,4-DICHLOROPHENOL
125 2,6-DICHLOROPHENOL
164 HEXACHLOROBENZENE
165 HEXACHLOROBUTADIENE
169 HEXACHLOROETHANE
185 METHYL ISOBUTYL KETONE
211 PENTACHLOROPHENOL
231 TOLUENE
244 VINYL CHLORIDE
245 XYLENES-MIXED ISOMERS (SUM OF O-, M-, AND P-XYLENE CONCENTRATIONS)
248 BARIUM
250 CADMIUM
251 CHROMIUM (TOTAL)
255 LEAD
257 MERCURY - ALL OTHERS
260 SILVER
51 ACETONE
81 CARBON TETRACHLORIDE
84 CHLOROBENZENE
91 CHLOROFORM

==========

----------N O T E S----------

EXP NOTICE: THIS LDR EXPIRES ON 12/31/2003.

GENERATOR'S AUTHORIZED SIGNATURE | NAME & TITLE (PRINTED OR TYPED) | DATE / /

SEQ#: 3664827 LOC: 0 TERR: REF#: 0 SW:

TOP COPY: GENERATOR MIDDLE COPY: FACILITY BOTTOM COPY: TRANSFE

K54474-R5732 SAFETY-KLEEN 02/14/03 PAGE: 1
LOCATION: LDR NOTIFICATION FORM 16:30:14

GENERATOR NAME:

MANIFEST NO.:
OR SALES SERVICE NO.: 0

CUST#: 0000000000

PURSUANT TO 40 CFR 268.7(A), I HEREBY NOTIFY THAT THIS SHIPMENT CONTAINS WASTE RESTRICTED UNDER 40 CFR PART 268 LAND DISPOSAL RESTRICTIONS (LDR).

A. GENERAL WASTE NOTIFICATION

LDR FORM LINE NO.: 1 MANIFEST PAGE/LINE# 01A SK PROFILE NO.: 0000
SKDOT#: 0000717

EPA WASTE CODES & LDR SUBCATEGORIES (IF ANY):
D039

TREATABILITY GROUP: NONWASTEWATERS

WASTE CONSITITUENT NOTIFICATION:
100 O-CRESOL
101 M-CRESOL (DIFFICULT TO DISTINGUISH FROM P-CRESOL)
229 TETRACHLOROETHYLENE
237 TRICHLOROETHYLENE
250 CADMIUM
251 CHROMIUM (TOTAL)
255 LEAD
257 MERCURY - ALL OTHERS
260 SILVER
67 BENZENE
84 CHLOROBENZENE

N O T E S

EXP NOTICE: THIS LDR EXPIRES ON 12/31/2003.

GENERATOR'S AUTHORIZED SIGNATURE | NAME & TITLE (PRINTED OR TYPED) | DATE

SEQ#:3664828 LOC: 0 TERR: REF#: 0 SW:

TOP COPY: GENERATOR MIDDLE COPY: FACILITY BOTTOM COPY: TRANSFE

TOP COPY: GENERATOR MIDDLE COPY: FACILITY BOTTOM COPY: TRANSFE

safety-kleen.

Annual Recharacterization Procedure

OPERATIONS

Division/Department:	Corporate Compliance Administration
Contact:	Dan Appelt 847-468-3274
Governing Policy:	
Procedure:	O510-001
Revision:	10
Revision Date:	**1/28/03**
Issue Date:	12/22/94
Page:	1 of 10
Approved:	Bill Ross

Purpose:

This procedure gives the Branches, Distribution, Accumulation, and Operation Centers notice and instructions for implementing the new waste codes assigned through the Annual Recharacterization of Safety-Kleen Hazardous Core Waste Streams.

These changed go into effect February 16, 2003, week 8.

Scope:

This procedure applies to all Safety-Kleen Branches, Distribution, Accumulation, and Operation Centers in the U.S. This procedure does **not** apply to pre-qualified waste streams

Responsibilities:

Branch/Facility Manager	Responsible for ensuring that all paperwork with old waste codes are removed from circulation and properly disposed of. The Facility Manager should also anticipate any customer reactions to changes in the waste codes and prepare the sales force (Managers, Administrative Staff, Sales Representatives) in advance. This may be done through training.
Administrative Staff	Responsible for ensuring that pre-prints, labels, LDRs and manifests processed after the AR effective date have the appropriate codes on them. If not, administrative personnel should contact their manager for further instructions. The Administrative Staff should also check the date when a container number was created when requesting labels and tags to make sure they contain the correct waste description and corresponding waste codes. (See Attachment B).
Regional Manager	Responsible for ensuring that Branches have complied with this procedure.

Environment, Health, and Safety Managers

Responsible for updating the Annual Recharacterization sampling database whenever waste analysis requirements change; reviewing new waste code assignments and modify permits as necessary; and ensuring that all appropriate facility and customer notifications are filed. Responsible for reviewing waste code changes during their first visits to facilities after the AR effective date.

Sales and Service Representatives

Should be prepared for customer concerns and questions. Responsible for ensuring that all old paperwork with old waste codes are returned to either the Administrative Staff or Managers. SSRs should keep a copy of Attachment B (Attachment C for Minnesota and Attachment D for Utah) and use it as a guideline to ensure that all paperwork, labels and tags reflects the proper waste descriptions and waste codes.

Definitions:

Annual Recharacterization

Every year Safety-Kleen samples and analyzes certain Hazardous Core Waste Streams. These Core Waste Streams are analyzed and the results subjected to statistical review to determine any changes from the previous year. Waste codes and treatment standards may be altered if the characteristics of the waste change.

Container Numbers

A unique number generated for each container of waste associated with a sale/service document, based on the SK DOT number and the service being performed. Depending on whether or not the waste is manifested, the system will search one of two files to make sure the appropriate information is used when logging waste in and out of a facility.

NOTE: **Due to the uniqueness of container numbers, it is very important <u>not</u> to use labels/tags assigned to one customer for another customer. Use On Demand Labels to produce Blank Generator labels for the Sales Reps use.**

Hazardous Core Waste Stream

Hazardous core waste streams are generally those waste streams that do not require separate analysis (pre-qualified waste) or do not qualify under a Generic Profile. These are for 2003: Aqueous Brake Cleaner, Branch Contaminated Debris, Immersion Cleaner, Parts Washer Solvent 105, Bulked Parts Washer solvent, Parts Washer Solvent Dumpster Sludge, Parts Washer Solvent Tank Bottoms, Parts Washer Solvent 150, Paint Gun Cleaner, Paint Waste Other, Dry Cleaner Bottoms (Perc), Dry Cleaner Filter Powder (Perc), Dry Cleaning Naphtha.

SK DOT Numbers

Numbers assigned by Safety-Kleen to a certain waste description that includes waste codes. This number allows the SK computer system to access the waste description and codes in order to print them on service documents, labels, manifests and lists them in our periodic reports.

UHCs	Underlying Hazardous Constituents. These are constituents found in the Hazardous Core Waste Streams that are not present at levels high enough to indicate the addition of a waste code but do require inclusion as UHCs for land disposal restriction purposes.
Waste Codes Added/ Deleted	Waste codes are added or deleted if the Annual Recharacterization process indicates that these codes are needed or not necessary. Changes in the Waste Code will result in the issuance of new SK DOT numbers.

Attachments:

Customer Notification Letter (Attachment A)	A letter that can be distributed to Safety-Kleen customers explaining the changes made in some of our Core Waste descriptions due to the Annual Recharacterization process and why the changes were made.
2003 Waste Code Chart - National (Attachment B)	This chart indicates which waste streams changed from 2002 to 2003. This chart also indicates the changes within those affected waste streams. For 2003, it is necessary to add or delete waste codes and use the appropriate **new** SK DOTs. Branches in **Minnesota** and **Utah** will be receiving a slightly different version of this chart, due to those states' specific testing requirements. Branches in California and Kansas will use this chart. **Note: There are changes for 2003 on a national level.**
2003 Waste Code Chart - Minnesota (Attachment C)	This chart indicates which waste streams changed from 2002 to 2003 for **Minnesota**. This chart also indicates the changes within those affected waste streams. For 2003, it is necessary to add or delete waste codes and use the appropriate **new** SK DOTs.
2002 Waste Code Chart - Utah (Attachment D)	This chart indicates which waste streams changed from 2002 to 2003 for **Utah**. This chart also indicates the changes within those affected waste streams. For 2003, it is necessary to add or delete waste codes and use the appropriate **new** SK DOTs.

Overview:

Safety-Kleen evaluates and changes (as necessary) waste codes for Hazardous Core Waste Streams as part of the Annual Recharacterization process each year. Waste codes are added or deleted according to the results of the analyses done the preceding year. Safety-Kleen examines those waste streams that are part of the closed loop system, some core business waste streams that are not part of the closed loop system (such as Aqueous and Special Markets), and certain Facility generated waste steams. The codes determined to be applicable by the Annual Recharacterization process MUST be used by all customers unless the customer can provide the analytical data demonstrating the inapplicability of these codes (see BOG O0320-003)

The following steps are taken to re-characterize the waste streams:

1. The EHS Administration Department, in coordination with the Technical Center, will identify the Safety-Kleen waste streams that need to be sampled and will have sample kits sent to various branches and other facilities in the U.S.

2. Facility Managers or their designees, properly trained to take samples, will obtain the samples that will be sent to the appropriate Technical Center approved laboratory for analysis. EHS Managers may elect to assist with this process but are not required to do so.
3. The Technical Center will publish preliminary results for review by the Annual Recharacterization Team, which represents appropriate Safety-Kleen departments. Preliminary results include the appropriate codes and UHCs for each affected Hazardous Core Waste Stream.
4. Official Annual Recharacterization results will be released.
5. The EHS Administration Department and the Information Technology Department will modify SK DOT numbers and shipping descriptions as necessary. BAP scheduling will produce pre-prints, LDRs, Labels, Tags and Manifests when the changes become effective.
6. Branches, D/Cs, A/Cs and R/Cs will be notified of any new changes in procedures with:
   - a revision of this procedure, or
   - publication of a new procedure, or
   - a correspondence to all facilities.
7. Branches will also receive instructions for informing their customers of any changes made to waste streams. A template letter for notifying customers is included in this procedure (See Attachment A) and the national SK DOTs are found in Attachment B.

These changes go into effect week 8 or February 16, 2003.

Procedures:

Branches must make sure the following is in place for the SK DOTs that have changed from 2002.

1. For Waste Codes that have changed (See Attachments B, C and D), make sure that all Service Documents (Pre-prints, Manual or Placement Documents), LDRs, Labels, Tags, and Manifests that have the old waste codes are destroyed and replaced with those having the new waste codes **AFTER** February 16. All extra Service Documents, LDRs, Labels, Tags and Manifests located in Sales or Service representative's truck or in customer files, with the old waste codes, **must** be destroyed. Replace the old paperwork with up to date (new) Service Documents, LDRs, Labels, Tags and Manifest with the new waste codes at the beginning the new year.
2. Any container numbers generated by the BAP System prior to the new SK DOT numbers should **not** be used. Old container numbers remain in the system for a while and can be accessed periodically.

New Container Numbers. If a new container number is created, make sure the Material Handler re-labels the drum with a label re-created through screen **MA55**, with the correct SK DOT number and correct waste descriptions.

Pull Ahead Services

All services performed prior to week 8 should use the old waste codes and SK DOT numbers. All service documents on these "work ahead" services should be carefully checked and corrected to use the 2003 waste codes and SK DOT numbers. **For any "work ahead" services originally scheduled after the start of week 8 but serviced prior to week 8, it is**

recommended to use the On Demand System to generate the paperwork and void the new 2003 documents to ensure the proper waste descriptions and waste codes are present.

Delayed Services

All services performed after the start of week 8 2003 should use the new (2003) waste codes and SK DOT numbers. This includes services originally scheduled prior to week 8 but delayed until after the start of week 8. All service documents on these "delayed" services should be carefully checked and corrected to use the 2003 waste codes and SK DOT numbers. **For any "delayed" services originally scheduled prior to week 8 but serviced after the start of week 8, it is recommended to use the On Demand System to generate the paperwork and void the old documents to ensure the proper waste descriptions and waste codes are present.**

Customer Specific SK DOTs

Annual Recharacterization waste code and SK DOT number changes **do not** apply to customers who are using customer-specific SK DOT numbers that are based on analysis (FRS sampling, TCLP analysis, Solvent Screening, etc.) and previously reviewed by the Tech Center and your EHS Manager.

Containers in Transit

Any waste containers in transit prior to week 8 2003 shall use the old waste codes throughout the Safety-Kleen system. Do not change the waste codes for waste in transit that were originally picked up prior to week 8 but reach their final destination after the start of week 8.

Record Retention

Once you receive the final Annual Recharacterization results package, replace the previous year's material with the new data. It must be filed in the file #1160 of the 999 file. Refer to Records Retention Policy to determine how long the old Annual Recharacterization results package shall be retained.

California, Minnesota and Utah Requirements

California

Waste shipped from or into California will follow the National Recharacterization for 2003 (See Attachment B). Additional CA specific waste codes are required and are listed in the shaded column found to the right of the chart. These codes only apply to California.

Minnesota

For those Waste streams that are **generated** or **received** at a facility in the State of Minnesota, whether it is a customer or Safety-Kleen location, you must follow the Annual Recharacterization Chart found in Attachment C. Consult with your Environmental Compliance Manager for further explanation.

Utah

For those Waste streams that are **generated** or **received** at a facility in the State of Utah, whether it is a customer or Safety-Kleen location, you must follow the Annual Recharacterization Chart found in Attachment D. Consult with your Environmental Compliance Manager for further explanation.

ATTACHMENT A - Customer Notification Letter

Year 2003 Annual Waste Recharacterization

Dear Customer,

Attached are the Year 2003 waste descriptions based on the Annual Waste Recharacterization for the waste streams Safety-Kleen manages as Hazardous Core Waste Streams. This data reflects the waste codes that we normally find in the management of these industry specific waste streams. The purpose of this memo is to clarify the reasoning behind our use of waste codes and the Annual Recharacterization process.

Under the hazardous waste management regulations, it is the generator's responsibility to describe hazardous waste prior to sending that waste for treatment or disposal. Safety-Kleen does not accept this responsibility on behalf of the generator. Once a waste stream is terminated at one of our facilities, however, Safety-Kleen does assume the generator's responsibility of that waste. In addition, because Safety-Kleen handles the same waste stream from many thousands of customers, we are able to provide those customers with information about the typical characteristics of their waste, which they can use as "Generator knowledge" in assigning waste codes.

This year, the quantitative analyses of the samples and statistical analyses of the resultant data in the Annual Recharacterization have determined that waste codes be added or removed from certain waste streams. These waste code changes are included in the Annual Recharacterization based on the frequency at which they were detected at regulated levels in the analytical data.

If a generator chooses to use Safety-Kleen's Annual Recharacterization analysis as knowledge of its process, and uses a service that is consistent with the Recharacterization, then we accept the waste for termination as is. Safety-Kleen Technical Center personnel will, however, have to approve customer specific waste codes, if a generator chooses to use its own knowledge of its process to identify which waste codes are attached to the waste. Laboratory analytical data will be required to remove codes determined by the Annual Recharacterization process. It is also highly recommended that the generator be able to back up any claims when inspected by a governing agency.

To offer the generator analytical data to back up their claim on which waste codes they feel should be attached to their solvent, Safety-Kleen has introduced cost effective services to screen many waste streams for typical waste codes found in the stream. This service is for customers that do not wish to use Safety-Kleen's Annual Recharacterization as a part of their generator knowledge. Waste codes can be removed from the paperwork if a certain code (or codes) is not found to be present and the generator has adequate analyses to back up the claim.

Attached to this letter you will find the waste code descriptions that will be used in Year 2003 based on Safety-Kleen's Annual Recharacterization. Should you have any questions, please call the Branch Manager at the phone number listed on your service document. Thank you for trusting Safety-Kleen, the *We Care* Company, as your partner in waste management.

ATTACHMENT B - Annual Recharacterization Waste Codes Chart Form

2003 ANNUAL RECHARACTERIZATION WASTE CODES
FINAL WASTE CODE ASSIGNMENT EXCLUDING MN**** and UT****

WASTE STREAMS		WASTE CODE CHANGES - NATIONAL				California
2002 SKDOT #	General Description	2002 Federal Waste Codes (From 2001 Data)	2003 Federal Waste Codes (From 2002 Data)	Waste Code Changes from 2002 to 2003	2003 NATIONAL SKDOT #	2003 CA Waste Codes
839	Aqueous Brake Cleaner	D039	D039	No Changes	839	134
11478 (L) 11479 (S) 14480 (LIQ AND SOLID MIX)	Branch Contaminated Debris	F001, F002, F003, F005, D001, D006, D007, D008, D011, D018, D022, D027, D028, D035, D039, D040	F001, F002, F003, F005, D001, D006, D007, D008, D011, D018, D022, D027, D028, D035, D036, D038 D039, D040	Add D036 & D038	15555 (SOLID AND LIQ MIX) 15556 (S) 15557(L)	741 (L) 751 (S)
950	Immersion Cleaner (IC 699)	D006, D008, D018, D027, D039, D040	D006, D008, D018, D027, D038, D039, D040	Add D038	456	741
704 801(RQ)	Parts Washer Solvent 105 Recycled	D001, D018, D039, D040	D001, D018, D039, D040	No Changes	704 801(RQ)	741
11657 (Bulk)	Parts Washer Solvents (Bulked) / Combination of 105 and 150 (Aqueous, where applicable)	D001, D018, D039, D040	D001, D018, D039, D040	No Changes	11657 (Bulk)	741
11656	Parts Washer Solvent Sludge/Dumpster Mud	D001, D039	D001, D039	No Changes	11656	741
11659	Parts Washer Solvent Tank Bottoms (bulk)**	D039	D039, D040	Add D040	15000	741
717	Parts Washer Solvent 150	D039	D039	No Changes	717	213
11658 12606(RQ)	Paint Gun Cleaner (SK)	F005, F003, D001, D018, D035, D039, D040	F005, F003, D001, D018, D035, D038, D039, D040	Add D038	12800 12801(RQ - high cap)	212
11653	Paint Waste Other ***	F005, F003, D001, D018, D035, D039, D040	F005, F003, D001, D018, D035, D036, D038, D039, D040	Add D036 & D038	12674 (ANY SIZE) 12675(30) 12676(55)	212
12627	Dry Cleaner (Perc) Bottoms	F002, D007,D039, D040	F002, D007,D039, D040	No Changes	12627	741
906	Dry Cleaner (Perc) Filter Powder	F002, D039	F002, D039	No Changes	906	751
569	Dry Cleaning Naphtha (Mineral Spirits)	D001, D039	D001, D039	No Changes	569	741

** Parts washer solvent tank bottoms are SK-generated wastes from the cleanout of solvent storage tanks. Safety-Kleen does not accept this waste stream from non-SK generators.

*** This DOT is acceptable to use for any size container of paint waste.
For those states that require 30-gal paint waste to be listed separately, use SK DOT 12675;
for states that require 55-gal paint waste to be listed separately, use SK DOT 12676.

****** For Minnesota and Utah, please refer to your state specific Recharacterization Waste Codes located on Attachments C and D.**

ATTACHMENT C - Minnesota Annual Recharacterization Waste Codes Chart Form

2003 ANNUAL RECHARACTERIZATION WASTE CODES
FINAL WASTE CODE ASSIGNMENT FOR MINNESOTA

WASTE STREAMS		WASTE CODE CHANGES (semi-annual, Feb 16,03 implementation)			
MINNESOTA 2002 SKDOT #	**General Description**	**2002 Waste Codes (From 2001 Data)**	**2003 Waste Codes (From 2002 Data)**	**Changes from 2002 to 2003**	**MINNESOTA 2003 SKDOT#**
839	Aqueous Brake Cleaner	D039	D039	NO CHANGES	839
11478 - Liquid 11479 - Solid	Branch Contaminated Debris	F001, F002, F003, F005, D001, D006, D007, D008, D011, D018, D022, D027, D028, D035, D039, D040	F001, F002, F003, F005, D001, D006, D007, D008, D011, D018, D022, D027, D028, D035, D036, D038 D039, D040	ADD D036 AND D038	15555 (SOLID AND LIQ MIX) 15556 (S) 15557(L)
950	Immersion Cleaner (IC 699)	D006, D008, D018, D027, D039, D040	D006, D008, D018, D027, D038, D039, D040	ADD D038	456
705 10044(RQ)	Parts Washer Solvent 105 Recycled	D001, D008, D018, D039, D040	D001, D008, D018, D039, D040	NO CHANGES	705 10044(RQ)
11241	Parts Washer Solvent (Bulked)/Combination of 105 and 150 (aqueous, where applicable)	D001, D008, D018, D039, D040	D001, D008, D018, D039, D040	NO CHANGES	11241
11656	Parts Washer Solvent Sludge/Dumpster Mud	D001, D039	D001, D039	NO CHANGES	11656
11659	Parts Washer Solvent Tank Bottoms**	D039	D039, D040	ADD D040	15000
975	Parts Washer Solvent - 150	D008, D018, D039, D040	D008, D018, D039, D040	NO CHANGES	975
11658 12606(RQ)	Paint Gun Cleaner (SK)	F005, F003, D001, D018, D035, D039, D040	F005, F003, D001, D018, D035, D038, D039, D040	ADD D038	12800 12801(RQ - high cap)
11653	Paint Wastes Other***	F005, F003, D001, D018, D035, D039, D040	F005, F003, D001, D018, D035, D036, D038, D039, D040	ADD D036 AND D038	12674 (ANY SIZE) 12675(30) 12676(55)
12627	Dry Cleaner Bottoms (Perc)	F002, D007, D039, D040	F002, D007,D039, D040	Nat'l	12627
906	Dry Cleaner Filter Powder (Perc)	F002, D039	F002, D039	Nat'l	906
569	Dry Cleaning Naphtha (Mineral Spirits)	D001, D039	D001, D039	Nat'l	569

NO CHANGES FROM JULY 02 - JAN 03

** Parts washer solvent tank bottoms are SK-generated wastes from the cleanout of solvent storage tanks. Safety-Kleen does not accept this waste stream from non-SK generators.

*** This DOT is acceptable to use for any size container of paint waste. For those states that require 30-gal paint waste to be listed separately, use SK DOT 12675; for states that require 55-gal paint waste to be listed separately, use SK DOT 12676.

ATTACHMENT D - Utah Annual Recharacterization Waste Codes Chart Form

2003 ANNUAL RECHARACTERIZATION WASTE CODES
FINAL WASTE CODE ASSIGNMENT FOR UTAH

WASTE STREAMS		WASTE CODE CHANGES			
UTAH 2002 SKDOT#	**General Description**	**2002 Waste Codes (From 2001 Data)**	**2003 Waste Codes (From 2001 Data)**	**Changes from 2002 to 2003**	**UTAH 2003 SKDOT#**
839	Aqueous Brake Cleaner	D039	D039	NO CHANGES	839
11478 - Liquid 11479 - Solid	Branch Contaminated Debris	F001, F002, F003, F005, D001, D006, D007, D008, D011, D018, D022, D027, D028, D035, D039, D040	F001, F002, F003, F005, D001, D006, D007, D008, D011, D018, D022, D027, D028, D035, D036, D038 D039, D040	ADD D036 AND D036	15555 (SOLID AND LIQ MIX) 15556 (S) 15557(L)
11090	Immersion Cleaner (IC 699)	D006,D007,D008,D018, D027,D039,D040	D006, D007, D008, D018, D027, D038, D039, D040	ADD D038	457
10082 10083 (RQ)	Parts Washer Solvent 105 Recycled	D001, D006, D008, D018, D027, D039, D040	D001, D008, D018, D039, D040	REMOVE D006, D027	705 10044(RQ)
11095 (Bulk)	Parts Washer Solvent (Bulked)/Combination of 105 and 150 (aqueous, where applicable)	D001, D006, D008, D018, D027, D039, D040	D001, D018, D039, D040	REMOVE D006, D008, D027	11657 (Bulk)
985	Parts Washer Solvent Sludge/Dumpster Mud	D001, D006, D008, D039, D040	D001, D006, D008, D018, D039, D040	ADD D018	12432
10085	Parts Washer Solvent Tank Bottoms**	D001, D006, D008, D039, D040	D039, D040	ADD D040	15000
975	Parts Washer Solvent - 150	D008, D018, D039, D040	D039	REMOVE D008, D018, D040	717
11003	Paint Gun Cleaner (SK)	F005, F003, D001, D007, D008, D018, D022, D028, D035, D039, D040	F005, F003, D001, D007, D008, D018, D035, D038, D039, D040	REMOVE D022, D028 ADD D038	12802 12803 (RQ)
11242	Paint Wastes Other	F005, F003, D001, D005, D007, D008, D018, D028, D035, D039,D040	F005, F003, D001, D005, D007, D008, D018, D035, D036, D038, D039, D040	REMOVE D028 ADD D036, D038	12677
12627	Dry Cleaner Bottoms (Perc)	F002, D007,D039, D040	F002, D007,D039, D040	NO CHANGES	12627
906	Dry Cleaner Filter Powder (Perc)	F002, D039	F002, D039	NO CHANGES	906
569	Dry Cleaning Naphtha (Mineral Spirits)	D001, D039	D001, D039	NO CHANGES	569

** Parts washer solvent tank bottoms are SK-generated wastes from the cleanout of solvent storage tanks. Safety-Kleen does not accept this waste stream from non-SK generators.

SafetyKleen®

Sampling Hazardous Materials and Wastes

ET 143

Instructor's Guide

Training Department

Revision Code: 9/07/99 SWM
File: S:\COURSES\ET\ET143\ET 143ig Sampling.doc
Copyright © 1999 Safety-Kleen Corp., Columbia, South Carolina

Table of Contents

Objectives **5**

Introduction **7**

Sampling Policies & Procedures 7

Safety Issues **9**

Material Identification 9
Personnel Protective Equipment 9
Protection of Bystanders 11
Sampling Team 11
Site-Specific Safety Issues 11
Grounding and Bonding 15
Opening Drums Safely 17

Representative Sampling **19**

Random Sampling 19
How Many Samples? 21
When to Composite 23
Exercise 1 27
Exercise 2 27

Sample Containers and Labels **29**

Compatibility 29
Sample Bias 29
Labels 31

Selection of Sampling Equipment **33**

Chemical Properties 33
Physical Characteristics 33
Depth/Dimensions 35
Purpose for Sampling 35

Sampling Equipment and Procedures **37**

COLIWASA 37
Weighted Bottle Sampler 43
Dipper (a.k.a. Pond Sampler) 45
Trier 45
Hand Auger 45
Thief (a.k.a. Grain Sampler) 47
Scoop and Shovel 47
Exercise 3 49
Exercise 4 51

Attachment 1 ..... **67**

Appendix I— Sampling Supply List **69**

Objectives

- Describe Safety Issues
- Representative Sampling
- Sampling Equipment and Use

Objectives

After successful completion of this training module, the participant will be able to:

- Describe the health and safety precautions that must be taken prior to and during the sampling of hazardous materials and wastes
- Explain how to accurately determine the size and number of samples that should be collected, and
- Demonstrate safe drum sampling technique.

Policies & Procedures

- Corporate Health and Safety Procedure
- Permitted Facilities
  - Site-specific SOP
- Guidelines for Branch Sales Representatives
- EPA & OSHA Regulations

Introduction

The information contained in this module is intended to be used only for the purpose of sampling hazardous materials whose identity is known. The safety protocol and sampling methods described in this module are not appropriate for the sampling of unknown materials.

Sampling is one of the most hazardous activities performed by Safety-Kleen personnel because of the potential for direct contact between the sampler and hazardous materials being sampled, but it can be performed safely if the proper preparations and precautions are taken.

Most of the sampling supplies that are described in this course are available from S-K Distribution Centers. A list of S-K Part numbers contained in Appendix I.

Sampling Policies & Procedures

Because sampling is an integral part of hazardous waste operations, most of Safety-Kleen's permitted facilities have developed a standard operating procedure (SOP) to cover hazardous waste sampling as a part of permit compliance. Other organizational units, such as Branch Sales, have also developed very strict sampling guidelines. Differences in these procedures make it difficult, if not inappropriate, to train employees uniformly in this activity. Therefore, in instances where different requirements than those identified in this module apply to certain job functions or operating units, those shall take precedence over the guidance provided here.

In addition to facility permit requirements and Guidance for Branch Sales Representatives, the Corporate Health and Safety Department has established Corporate Health and Safety Procedure SAF-22, *Sales Representative Sampling*.

Safety Issues

- Material identification / Unknowns
- PPE
- Protection of bystanders
- Sampling Team
- Site-specific safety issues
- Grounding and bonding
- Opening drums safely

12/7/98 Sampling Hazardous Materials and Wastes ET-143 1

Material Identification

- Identity of material to be sampled must be known in order to select PPE
- ***NEVER SAMPLE UNKNOWNS***
  - Exception: remediation and emergency response
  - Handled by chemists who have received training in HAZCAT Analysis

12/7/98 Sampling Hazardous Materials and Wastes ET-143 5

Personal Protective Equip. (PPE)

- Full-face respirator protection mandatory
  - Medical approval
  - Fit testing

- PPE pre-selected for Branch Sales Reps
  - Hard hat, respirator, saranex-coated suit or apron with sleeves, nitrile gloves, safety glasses with permanently attached side shields, splash guards or chemical splash goggles

12/7/98 Sampling Hazardous Materials and Wastes ET-143 6

Safety Issues

Material Identification

Since there is no universal personal protective equipment (PPE) that protects against all chemical and physical hazards, the identity of the material to be sampled must be known in order to select the appropriate type of PPE. Therefore, the common-sense rule of thumb is:

NEVER SAMPLE UNKNOWNS!

As with any rule, there are exceptions. Remediation and emergency response chemists who have received training in HAZCAT Analysis often work on sites where unknown materials must be sampled, but must take extra precautions, such as the use of remote-controlled or specially shielded equipment, to do so safely. If you have a customer with an unidentified waste material, contact your Customer Service Representative for assistance in scheduling a Technical Field Services team to perform sampling and identification.

Personnel Protective Equipment

Sales personnel, including managers and sales representatives, do not select personal protective equipment (PPE). Their PPE is pre-selected and fixed. It includes the following items:

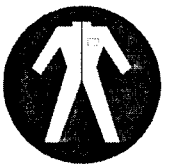

- Hard hat (if appropriate or required by client)
- Full-face respirator with choice of cartridges
  - organic vapor cartridges (black)
  - organic vapor/acid gas cartridges (yellow)
  - ammonia cartridges (green)
  - multipurpose cartridges for particulates, ammonia, acid gas, and ammonia (purple)
- Saranex-coated suit or apron with sleeves
- Nitrile gloves

Protection of Bystanders

- Personnel not involved in sampling must be protected by:
  - Distance
  - Barriers
  - Blast shields

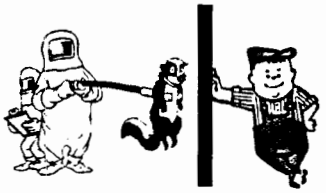

12/7/98 Sampling Hazardous Materials and Wastes ET-143 7

Sampling Team

- Never sample alone
- Be accompanied by a representative of the customer Why?
- To ensure help and emergency response is available

12/7/98 Sampling Hazardous Materials and Wastes ET-143 8

Site-Specific Safety Issues

Preparation: Sampling Site Survey

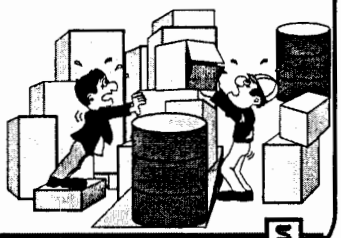

12/7/98 Sampling Hazardous Materials and Wastes ET-143 9

Site-Specific Safety Issues

- Lockout/Tagout of Energized equipment
  - Electrical hazards
  - Mechanical hazards
  - Hydraulic / pneumatic equipment hazards

12/7/98 Sampling Hazardous Materials and Wastes ET-143 10

Prior to performing waste material sampling, Branch sales personnel must have a medical examination and receive a medical clearance to wear a respirator. After receiving medical clearance, the employee must be fit-tested for a respirator and must be issued a properly fitting full-face respirator and the other standard PPE listed above.

Operations Personnel

Prior to performing waste material sampling, all personnel must receive a medical clearance to wear a respirator, be fit-tested and issued a respirator. TSRs and operations personnel must also complete the 40-hour or 24-hour HAZWOPER Training course (HS 101 or HS 102), in which PPE selection is covered in depth. The PPE selection process for wastestream sampling is the same as for any other purpose.

Protection of Bystanders

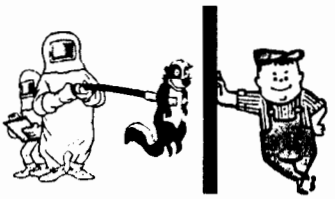

Personnel who are not involved in sampling hazardous materials may be working nearby and not adequately protected from the physical or chemical hazards of the materials that you are sampling. OSHA requires that all personnel who are not engaged in sampling activities be protected by one of the following:

- Separation from the sampling activities by a distance great enough to ensure their safety from chemical sprays, fires, or explosions that could occur during the sampling event. or
- Physical barriers or blast shields between workers and the material being sampled.

Sampling Team

Never sample alone. When sampling at a customer's site, arrange in advance to be accompanied by a representative of the customer. He or she must be present at all times to ensure that help and emergency response is always available in the event of a problem. Predetermine how and who to contact in the event of an emergency.

Site-Specific Safety Issues

Energized Equipment

Other safety issues that can impact sampling include electrical, mechanical, pneumatic, and hydraulic hazards. If sampling is to be done in close proximity to any energized equipment that could threaten the safety of the sampling crew, the customer or facility maintenance supervisor should be asked to determine if Lockout/Tagout is necessary.

Site-Specific Safety Issues

- Confined spaces
  - Sales personnel prohibited from confined space entry
  - Have customer move containers out of confined space
  - Special training ***required*** to enter confined space

Site-Specific Safety Issues

- Locate:
  - Nearest emergency exit, eye wash, and shower
  - Spill control equipment
  - Fire extinguishers
  - Alarm pulls
- Review facility emergency plan

Site-Specific Safety Issues

- Inspect containers or tanks to be sampled:
  - leaks
  - rust
  - dents

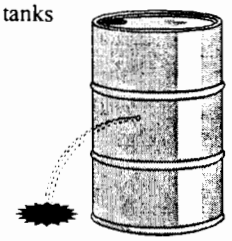

Site-Specific Safety Issues

- Inspect containers or tanks to be sampled:
  - hot or cold
  - bulged or concave head (pressure or vacuum)

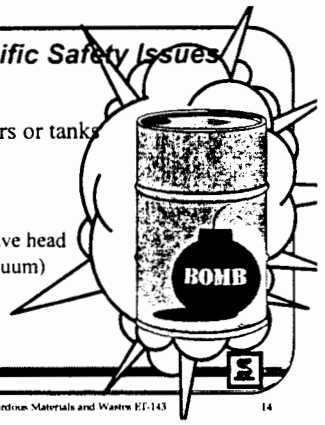

Confined Spaces

Sampling in confined space is prohibited unless done by a full team who has received the appropriate confined space entry training (HS 207 or HS 307). Confined space sampling is strictly forbidden for sales representatives by the Corporate Health and Safety Procedure (SAF-22).

Emergency Equipment

The area in which the sampling will be conducted should be surveyed prior to sampling in order to identify potential hazards and to prepare for appropriate emergency action. This is not necessarily a lengthy survey—for most sales sampling, this can be concluded in only a few minutes. This includes locating the following items:

- Nearest emergency exit, eye wash, and shower
- Spill control equipment
- Fire extinguishers
- Alarm pulls
- Telephone

If extensive sampling is to be performed, you should also ask to review the facility emergency plan.

Container/Tank Inspection

Finally, before sampling, you should don your PPE and inspect all containers or tanks to be sampled. Visually check the top and the sides of each drum for bulges, pinholes, signs of rust, weakened sidewalls, deteriorated drum openings.

If you detect heat or cold, bulging, or hear anything unusual (i.e. hissing, bubbling, crackling noises) coming from the drum, **STOP IMMEDIATELY.** These are signals that a chemical reaction is occurring within the drum(s). At this point, allow the customer to determine what should be done (such as enacting their emergency response plan).

If the head is dished inward, it may pop up when the vacuum is suddenly relieved, spraying you with any material that is on the head.

Grounding and Bonding

- Protects against static discharge (sparks)
- Required for all containers and tanks unless contents are *known* to have flash point > 200° F

Grounding and Bonding

Minute electrical charges, also called static charges, are generated by the movement of fluids and stored in the fluids and their containers. Over time, these charges can build up to a level capable of creating a spark when the container is approached by an oppositely charged (grounded) object, such as a bung wrench or sampling device in the hands of the sampler.

Static charges can be safely dissipated by a procedure known as "grounding and bonding". **Grounding** is the process of draining the positive electrical charges off of the charged object into the ground, or a negatively charged object. For a metal container, tank, or tanker truck, this is accomplished by:

1. attaching a metal cable or strap to the container via a clamp that bites into the metal, and then
2. attaching the other end of the cable or strap to a grounded object in the same manner.

This must be done in the order described, because a static discharge, or spark, could occur at the point where the second connection is made. If the cable is attached to the ground first and then to the container, the spark could be near enough to flammable vapors to ignite them. Disconnection must be done in reverse order.

If the container to be sampled is not metal, connection to the container is not an effective way of dissipating static in its liquid contents. To do this, carefully drop a bonded (see discussion on **bonding** below) conductive chain or rod into the liquid, and then connect the chain or rod by a grounding cable to a grounded object. (If using a COLIWASA with a steel inner rod, insert the COLIWASA into the liquid, attach the grounding cable to the rod, then to the ground.)

Note: Tankers holding a large volume of liquid can accumulate very large static charge that may take a longer period to dissipate. Therefore, they should remain grounded for at least 15 minutes before opening the hatches to perform sampling.

Bonding is the process of equalizing the static electrical charges between two objects. Like grounding, bonding can create a spark, and must be done carefully and before opening the container, tank, or tanker. The bronze, non-sparking bung wrench (or other opening tool) and the sampling device should be touched to the container at a point away from openings or vents. If the sampler is a COLIWASA (see description below), this should be done with both the outer tube and the inner rod.

Note: Grounding and bonding should be done before sampling any liquid for which the flash point is not known to exceed 200° F.

Opening Drums Safely

- Press down on top of drum
- Place bung wrench in bung and cover with wipe
- If multiple drums loosen bungs but do not remove
- Place absorbent pad on top of drum prior to sampling

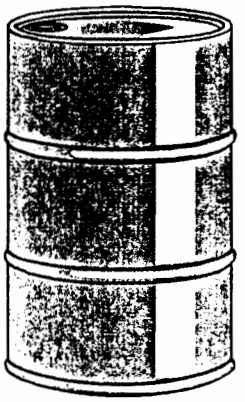

Opening Drums Safely

After grounding the drum and bonding the sampling equipment against the grounded drum, you may open the drum:

1. Press down on the top of the drum with the palm of your hand, checking for evidence of pressurization (due to gases or expanded liquids). If there is no "give", the drum may be pressurized.

2. If a drum appears to be pressurized (i.e. bulging drum head), loosen the smaller bung first since it is easier to control the release of pressure through the smaller bung. If the head is dished inward or outward, be careful that when the pressure is equalized, the head does not "pop" and spray you with any material that may be on top of the drum.

3. Place the bung wrench in the bung and cover it with a wipe to control any potential liquid spray.

4. If more than one drum of the same wastestream will be sampled for a composite sample, loosen, but do not remove, the larger bung on all drums that will be sampled. Only one drum may be open at a time.

5. Contain Spills. Before taking the sample, an absorbent pad will be placed on top of the drum that is to be sampled. This will help contain any drips or spillage to your immediate work area and will make cleanup easier.

Representative Sampling

- Definition
- Types of samples
- Random sampling
- How many samples
- Compositing

Representative Sample

A sample that exhibits the average properties of the wastestream as a whole

Types of Samples

- Discrete (Grab) Samples
  - A sample taken from at a specific point and place
  - Single sample not representative

Types of Samples

- Composite Samples
  - Sample created by mixing two or more samples together
  - Used to determine average concentration estimates
  - Reduces analytical costs

Representative Sampling

The primary objective in sampling a waste is to collect samples that allow measurements of the chemical properties of the waste that are both accurate and precise. Such samples are said to be representative—exhibiting average properties of the whole waste. If the chemical measurements are sufficiently accurate and precise, they will be considered reliable estimates of the chemical properties of the waste.

There are two types of samples:

- Grab samples (a.k.a. discrete samples)—samples collected from specific point in time and place
- Composite samples—a sample created by mixing two or more samples together

Either may be representative of the material being sampled, depending upon the uniformity of the material. If a material is uniform, or homogeneous, any and every sample is likely to accurately represent the average composition of the material from which it was collected. Therefore, few samples are needed in order to adequately identify its properties for safe treatment and handling. The more uniform the composition is, the fewer the number of samples needed for this purpose.

This may be demonstrated by mixing a volume of course black sand with an equal volume of course white sand. If the whole mass of the sand is extremely well mixed so that the distribution throughout is nearly uniform, it is likely that any single randomly selected sample will be contain a 50:50 ratio of black and white sand.

However, if the sand is poorly mixed, or heterogeneous, it is likely that any given sample will be predominantly black or white, or perhaps even wholly one or the other. In this case, a single grab sample is highly unlikely to be representative of the sand mixture. Representative sampling of a heterogeneous wastestream is achieved by collecting a number of grab samples from randomly selected locations in the sand mass. If these grab samples were independently analyzed for black and white content, and then the results of all analyses averaged, the resultant calculation would yield approximately a 50:50 ratio of black and white sand. A less laborious (and less costly) way of accurately estimating the ratio would be to composite all of the grab samples and have the single grab sample analyzed. Either way, the result is likely to be representative of the whole mixture.

Random Sampling

In general, the more varied the composition and the larger the volume, the greater number of *random* samples will be necessary to representatively sample the waste. The emphasis on "random" is because the biased selection of sampling locations, regardless of intent, could result in a non-representative sample. For example, if your eye is drawn inadvertently to the darker areas of the sand mixture, it is likely that the final composite will contain significantly more black sand than white sand. Likewise, attempts to compensate for a known bias of this sort can bias the result in the opposite direction, leading to a composite that contains significantly more white sand.

Which Drums?

Random Drum Sampling

- EPA SW-846

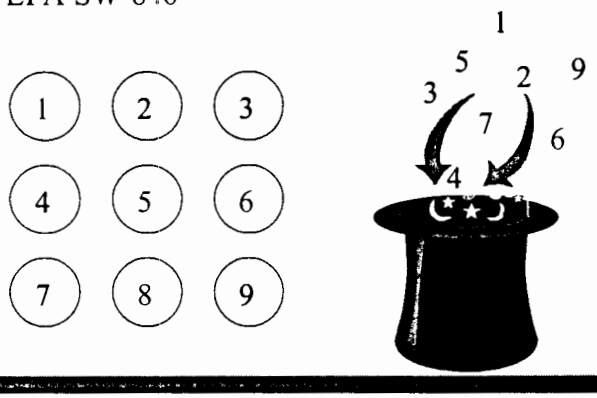

12/7/98 Sampling Hazardous Materials and Wastes ET-143 21

Types of Random Sampling

There are many approaches to random selection of sampling locations or units. The main factor affecting the appropriateness of one method over another is the way in which the composition varies within the wastestream. In most cases, the heterogeneity is random, meaning the chemical or physical characteristics vary within the mass of the wastestream, but that variability is fairly constant from location to location and from batch to batch. However, many wastestreams are non-randomly heterogeneous, meaning the chemical or physical characteristics vary but the variable characteristics may be clustered, layered or non-uniform in some other way. An example of this would be several drums generated as separate batches of waste from the same oil-water separator, in which the oil volume and concentration of contaminants in the sludge varies considerably from drum to drum.

In *simple random sampling*, all locations or points in all batches of waste from which a sample could be collected are identified, and a suitable number of samples is randomly selected. Simple random sampling is generally used when the physical and chemical characteristics of a waste vary randomly throughout the wastestream. In sampling drums of waste, this is the method most commonly used.

More complex *stratified random sampling* is generally employed when the wastestream can be divided into units of similar characteristics, in which the variability within a unit is less than the variability between units. Each unit is then sampled by a simple random approach and the analytical results from each unit are averaged. The final analytical result is produced by a weighted average of all the units in the sampling program.

A third type of random sampling is *systematic random sampling*, in which the first sampling location is selected at random, but all subsequent samples are taken at regular intervals from the first. This method is easier to use, but does not produce a representative result if the waste varies non-randomly.

How Many Samples?

The more samples that are collected, the more likely the analytical results will approach the true average for the waste as a whole. Unless specified in the Waste Analysis Plan or in some other permit condition, however, there is no mandatory number of samples that must be collected. (Some S-K facilities do have permits that require sampling of every drum.)

For very large sampling efforts, for which a formal sampling plan is appropriate, it does make sense to calculate the optimum number of sample necessary to achieve the lowest acceptable level of accuracy, thereby reducing overall sampling and analysis costs. Guidance for this determination is provided in *Test Methods for Evaluating Solid Waste, Physical/Chemical Methods, EPA Publication SW-846.*

How Many Samples?

No. of Drums to be sampled = Sq. Root # Drums
(always round up)

Total # Drums	1	2-4	5-9	10-16	17-25
# Drums to be sampled	1	2	3	4	5

12/7/98 Sampling Hazardous Materials and Wastes ET-143 22

Composite Sampling

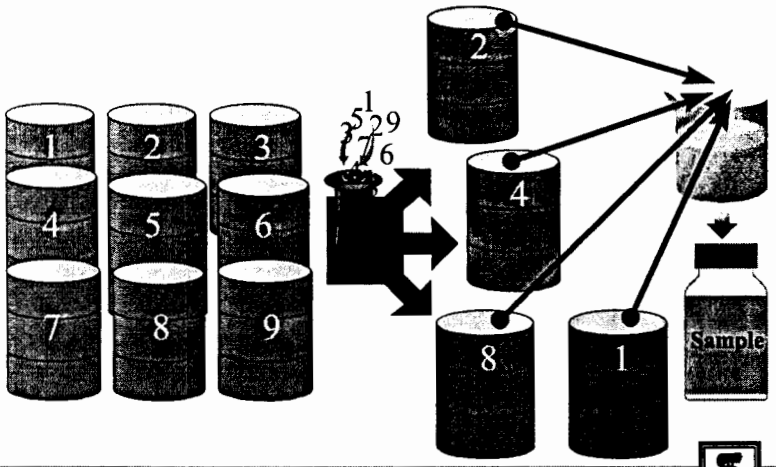

8/12/99 Sampling Hazardous Materials and Wastes ET-143 23

When sampling drums, a simple and practical method often used to determine the number of samples to be collected is the calculation of **the square root of the total number of drums in the wastestream, rounded up the next whole number**. The following table represents this calculation:

Total number of containers (per wastestream)	Number of containers to be sampled
1	1
2-4	2
5-9	3
10-16	4
17-25	5
26-36	6
37-49	7
50-64	8
65-81	9
82-100	10

Whenever knowledge of the wastestream indicates that there is likely to be great variability between drums, all drums should be sampled.

When to Composite

In some cases, compositing grab samples to produce a single representative sample may not be desirable. This depends on several factors:

- the purpose for which the sampling is being conducted,
- the degree of variability,
- the specific character of the material.

If the purpose of sampling is to properly characterize the material so that it may be assigned to a standard treatment process, great variability in certain characteristics could toggle the decision between two or more treatment processes. An example of this would be a wastestream whose pH varies widely. In cases where the waste material poses such potential, DON'T COMPOSITE. Analysis of the individual grab samples will yield important information about the range of values that would be lost in compositing.

In sampling a batch of drums from the same waste generating process in which pH is highly variable, mixing an acidic sample with a basic sample could cause an extremely hot and potentially violent reaction. In such cases, every drum should be sampled. The decision of whether to composite or not will depend on the pH of each sample, and may be made either on site or in the laboratory, depending on the training of the sampler.

Samples of reactives (e.g. cyanides, sulfides, and isocyanates) and oxidizers should not be composited in the field because of the risk of reaction.

Another case in which compositing is not desirable is when sampling is being conducted to facilitate a treatability study, in which a treatment process will be custom designed to handle the waste. The range of analytical values must be determined during by the study.

In summary, DON'T COMPOSITE:

- corrosive samples whose pH is not very similar
- oxidizers
- cyanides, sulfides, isocyanates, or other reactives
- when sampling for a treatability study.

When creating a composite sample in the field, if more than 3 full COLIWASAs must be mixed, it will be necessary to use a bucket, and then create a representative subsample from the material in the bucket. When doing this, the construction materials of the bucket must be compatible with the waste being sampled. For example, if the sample contains organic solvents, a plastic bucket should not be used (see discussion of sample bias under "Sample Container and Labels", below. In this case, steel would be a better choice. However, if the waste to be sampled is an acid, plastic would be desirable.

Once a bucket has been used, is must be returned to the Branch or other S-K facility and decontaminated for future use or disposed of properly.

Exercise 1

A client has 49 drums of mineral spirits and 3 drums of an oil/water mixture.

How many drums should be sampled and how would you composite them?

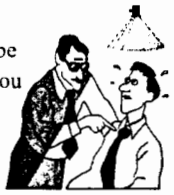

12/7/98 Sampling Hazardous Materials and Wastes ET-143 24

Exercise 1

49 drums of mineral spirits

3 drums of an oil/water mixture

- 9 drums sampled, 2 composite samples
- 7 samples of mineral spirits mixed in a bucket to prepare 1 sample bottle
- 2 samples of oil/water mixture composited in 1 sample bottle

12/7/98 Sampling Hazardous Materials and Wastes ET-143 25

Exercise 2

Another client has 5 drums of petroleum distillates, 7 drums of paint waste, and 1 unidentified drum left behind by a previous tenant on the property, which he is willing to pay to have removed.

How many drums should be sampled and how would you composite them?

12/7/98 Sampling Hazardous Materials and Wastes ET-143 27

Exercise 2

5 drums of petroleum distillates

7 drums of paint waste

1 drum of unknowns

- 3 samples of pet. distillates mixed in a bucket to prepare 1 sample bottle
- 3 samples of paint waste mixed in a bucket to prepare 1 sample bottle
- Do NOT sample unknowns!!

12/7/98 Sampling Hazardous Materials and Wastes ET-143 28

Exercise 1

A client has 49 drums of mineral spirits and 3 drums of an oil/water mixture. Using the chart given on page 23, determine how many drums to sample. Then explain whether you would composite any of the samples; and, if so, how.

Exercise 2

Another client has 5 drums of petroleum distillates, 7 drums of paint waste and one drum of unidentified material abandoned by a previous tenant, for which he is willing to pay for the cost of removal. According to the chart on page 23, many drums should you sample? Would you composite any of the samples; and, if so, how?

Sample Containers

- Container selection
  - Chemical compatibility
  - Analytical interference from some plasticizers
  - Integrity during shipment
  - DOT compliance

Sample Containers and Labels

Generally, wide-mouth jars must be used for solids and liquids containing sludges or slurries, while narrow-mouth bottles should be used for liquids containing volatile components. They must also provide ample integrity during shipment to prevent breakage or leakage and must comply with the U.S. Department of Transportation's packaging standards.

Compatibility

The material being sampled must be compatible with the materials of which the sample container (including lid and seal) is made and must not leach constituents into or otherwise alter the sample in such a way as to affect the analytical results. Examples of container incompatibilities include:

- acids — steel and aluminum
- bases — aluminum
- chlorinated solvents — many plastics
- hydrofluoric acid — glass
- methylene chloride — aluminum
- oxidizers — some plastics, aluminum, some grades of steel
- solvents — neoprene

Sample Bias

Sample bias caused by the sample container construction materials includes:

- losses by permeation, adsorption and volatilization
- cross contamination between samples during storage and shipment
- release of plasticizers and other organic compounds from plastics when sampling solvents
- release of heavy metals from metal alloy sampler parts when sampling acids or bases

Sample Containers

- Labeling essentials
  - Sample ID number
  - Name of material sampled
  - Sampler's name (preferred) or initials
  - Date/time
  - Name and location of facility
  - Identification of sample source

Labels

Labels should be self-adhesive or gummed paper of a size appropriate for the container and should contain, at a minimum, the following information:

- Sample number
- Name of material sampled
- Name of collector (full printed name preferred over initials)
- Date and time of collection
- Place of collection (name and location of facility)

Optional information includes such data as identification number of the container(s) or tank(s) sampled and relevant observations or field data, such as estimated percentage of sludge in the containers or tanks.

Additional sample labeling requirements may be specified by the laboratory performing the analysis or by the facility receiving the waste.

Equipment Selection

- Waste volume
- Physical properties
  - Crushed, powdered, or whole solids
  - Free flowing or viscous liquids
  - Layering, density, cohesion
  - Homogeneous or heterogeneous
- Chemical compatibility with sampler

Selection of Sampling Equipment

The selection of sampling equipment will depend upon several factors: chemical properties, physical characteristics, depth or dimensions of the containment structure, and the purpose for which the sampling is being conducted.

Chemical Properties

The material being sampled must be compatible with the materials of which the sampling device and sample container is constructed and must not leach constituents into or otherwise alter the sample in such a way as to affect the analytical results. Examples of incompatibilities include:

- acids — steel and aluminum
- bases — aluminum
- chlorinated solvents — many plastics
- hydrofluoric acid — glass
- methylene chloride — aluminum
- oxidizers — some plastics, aluminum, some grades of steel
- solvents — neoprene

Examples of sample bias caused by the sampling device or sample container construction materials include:

- losses by permeation, adsorption and volatilization
- cross contamination between samples during storage and shipment
- release of plasticizers and other organic compounds from plastics when sampling solvents
- release of heavy metals from metal alloy sampler parts when sampling acids or bases

Physical Characteristics

Viscosity of liquids, particle size of crushed or granular solids, variability/homogeneity, and density layering are a few examples of the physical parameters that affect the type of sampler that may be used effectively.

These factors affect both the type of sampling equipment and the sample container that must be used. Generally, wide-mouth jars must be used for solids and liquids containing sludges or slurries. Narrow-mouth bottles should be used for liquids containing volatile components.

Depth/Dimensions

COLIWASAs, thieves, triers, and other devices are suitable for shallow containers and tanks, but bottle samplers or other devices must be used to sample deeper tanks, lagoons, or ponds.

Purpose for Sampling

Generally, samples collected for hazardous waste determinations, determination of treatment standards, and approval for recycling/treatment/disposal must contain from one quart to one gallon of liquids or 100 grams of solids. These samples are usually composites of several smaller randomly selected samples to ensure that they are representative and to reduce the analytical costs.

Treatability studies, however, generally require much larger samples and more of them. The need for a larger sample size is due to the number of trials that is usually needed to identify a successful treatment method. Both the average concentration and the range of concentrations (variability and the extremes) are important, which eliminates compositing while necessitating a greater number of grabs to achieve representative sampling.

Ultimately, the minimum sample size is determined by a combination of the number of analyses that must be run and by the quantity required for each test method.

Table 1 at the end of this module summarizes the suitability of each type of sampling device for different types of materials.

Sampling Equipment

- COLIWASA
  - Free-flowing liquids and slurries

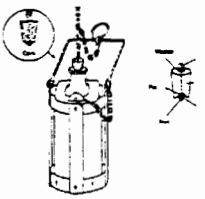

- Weighted bottle sampler
  - Free-flowing liquids and slurries
- Dipper (a.k.a. pond sampler)
  - Free-flowing liquids and slurries

Sampling Equipment and Procedures

COLIWASA

A Composite Liquid Waste Sampler, better know as a COLIWASA, (see Figure 1) is usually the best type of sampler for free-flowing liquids and slurries in drums, totes, tanker trucks, shallow tanks and other containers. COLIWASAs are available or can be constructed in a variety of lengths and design modifications.

The COLIWASA consists of a glass, metal, or plastic tube with an end closure connected to an inner rod. The rod is used to close the tube while it is submerged in the material being sampled. It permits the representative sampling of multiphase wastes of wide range of viscosity, volatility, and solids contents. Its simple design makes it easy to use and allows the rapid collection of samples, thus minimizing the exposure of the sample collector to potential hazards from the wastes. The cone-shaped valve on the lower end is opened and closed by means of the rotating eccentric cam on the top end. An over-center feature on the cam locks the valve closed when desired.

Safety Precautions

New glass or plastic COLIWASA tubes may have a residual static electrical charge due to the material in which they are shipped. Before using a new tube, several important safety precautions must be observed to dissipate a static charge:

1. Wash - The new tube must be cleaned with a damp cloth and then patted dry with a cotton cloth. Do not rub the cloth the length of the shaft as this motion tends to build static electricity.

2. Ground - The COLIWASA must be grounded against a grounded metal surface such as a water pipe.

3. Final Bond - Before sampling a drum with a glass, plastic, or metal COLIWASA, gently touch the outside rim of the drum with the COLIWASA on the opposite side from the open bung. This will equalize any static charge that has been generated on the drum itself.

These steps are essential to the safe use of the unit, especially with a new tube. The final bonding must always be done whether using a new or old tube so that a potential explosion can be avoided.

Sampling Procedure

1. Review the Material Profile and its attachments (such as MSDSs) prior to sampling.

2. Check to make sure that the COLIWASA sampler is functioning properly. If necessary, adjust the cone on the threaded rod to give just enough force to form a good seal. DO NOT OVER TIGHTEN Replace the bottom O-ring if the liquid continues to leak out after properly tightening the cone. Make sure that there are no solids interfering with the seal of the O-ring to the tube.

3. Open your sample bottle and place it securely on the surface of the drum to be sampled.

4. The bungs should already be loosened for those drums that you have selected for sampling.

5. Open the sampler and ground the tube against the drum on the side of the drum away from the large bung.

6. Ensure that the sample tube is not hot from being stored in the car or van. This is necessary to prevent boiling the solvent in the sample tube. (A report was received that a hot sampler was used to take a sample of Freon, which immediately proceeded to boil in the sampler and shoot out of the top of the sampler, spraying the surroundings.)

7. Slowly lower the sampler into the drum. Lower the sampler at a rate that permits the levels of the liquid inside and outside the sampler tube to be about the same. This is especially important for those drums that contain more than one liquid phase. Keep in mind two phrases: You can never go too slowly; and the thicker it is, the slower you go.

8. Repeat Step #6 by lowering and raising three (3) times without closing the bottom valve before actually sampling. This rinses the tube, ensuring a representative sample.

9. When you are ready to take a sample, lower the COLIWASA to the bottom of the drum. Hold the top cam down to ensure that the cone on the bottom stays open. If you hit solid or sludgy material before you reach the bottom, estimate (in inches or percent of the drum) the volume in gallons at which this occurred. Do not force the tube into the solid material.

   NOTE: If sampling for a Prequalification Analysis, be sure that you record on the Material Profile Form the solids content and any other unusual features (color, water, viscosity, etc.) that may be different than initially included on the survey.

Clean Up

- Never leave clean-up materials at customers site.
- Bring all materials back to branch and properly dispose.

10. 12/7/98 Sampling Hazardous Materials and Wastes ET-143 37

11. With the COLIWASA resting on the bottom of the drum (or to the level at which you hit solid material), close the valve on the top of the COLIWASA and slowly withdraw the sample. Allow the liquid on the outside of the sampler to drain back into the drum. If necessary, wipe down the outside of the sampler with a disposable wipe, draining the excess back into the drum.

12. Carefully place the end of the COLIWASA into the opening of the sample bottle, then release the valve on the top of the sampler. Be sure that the end of the sampler is fully inside the jar since the material will spray out sideways as the bottom valve is opened. Three full COLIWASA samplers a 55-gallon drum will fill the sample bottle about 80% full. A minimum of 1 inch of air space must remain in the top of the filled sample jar to allow for thermal expansion during shipment.

13. Clean the outside of the bottle, then label the it with the label provided with the Material Profile Form. Also, place the smaller numbered labels on the drums that were sampled. If more than two (2) drums are sampled per waste stream (the number of pre-printed drum labels provided), then mark the Profile number on the additional drums with a grease or paint pencil. It is important to know exactly which drums were sampled in the event that there is a problem with the analysis and the drums need to be rechecked . Record the information on the sample label with an indelible marker (e.g. "Sharpie").

14. Package the sample and ship it via UPS per the instructions in the Sample Shipping Guidance 88-1.

Cleanup

Properly completing and leaving the customer's premises is as important as the initial sales call in presenting an image of the best waste handler for the customer. No cleanup materials will be left at the customer's site. All will be cleaned, returned to the Branch, and properly disposed.

All materials will be cleaned using the wipes provided. No solvent may be used to clean the sampler since this would cause the cleanup materials to be classified as a hazardous waste. If residue has dried on the tube, reinsert it back into the drum that the sample came from to moisten it, then immediately wipe it down.

The sample tube will be thoroughly cleaned between samplings of different waste streams. It may be used without cleaning when sampling multiple drums within the same waste stream. The 3-rinse procedure described in steps 5 and 6 above should be used between each and every drum.

Cleaning involves unthreading the cone from the bottom of the tube and separating the center rod from the outer tube. Wipe down the rod and bottom cone with one of the wipes. Make sure to get all possible material off of the rod and cone.

The tube should be cleaned by wiping down the outside with a wipe. The wipe should be folded into a 6-8" square which will allow it to pass through the tube without binding. Push the wipe through the tube with the sampler's center rod. Then, turn the wipe inside out and repeat the procedure to get all final residues out.

Reassemble the sample tube taking care to adjust the tension on the rod through proper cone placement.

Disposal of Contaminated Materials

All materials that are too dirty to use, damaged, or otherwise unusable, will be returned to the Branch for disposal. Nothing will be left at the customer's site.

1. Store the dirty cleanup wipes in a plastic drum liner bag. Also, place damaged gloves, dirty chemical protective suits, and other items to be disposed in this bag.

2. COLIWASA tubes that are damaged should also be placed in this bag for disposal. All sample material must be removed from the tubes before disposal. Remove the cone, rod, and top cam and reuse if possible.

3. The material that is to be disposed must be returned to the Branch and placed in the dry dumpster (trash bin) for disposal at the local sanitary landfill. All items should be placed in the plastic bag before placing in the trash.

4. Spill cleanup material and residue may not be disposed of in the dry dumpster. Pads or other absorbent material that are used in cleaning up a spill should be bagged and returned to the Branch to be put in a drum. This drum must be properly labeled as spill residue of the appropriate material and shipped with other FRS drums to the Recycle Center. Spill residue material must be handled separately from the other dirty sampling supplies.

Weighted Bottle Sampler

The weighted bottle sampler (see Figure 2) is used to sample free-flowing liquids and slurries in deeper tanks, tanker trucks, rail tank cars, and ponds/pits/lagoons. This sampling device collects "grab samples", which may not be representative of the wastestream. Typically, a sample is taken from three equally spaced depths in the tank or pond. These individual samples may be analyzed separately or composited in a bucket to create a representative sample.

Sampling Procedure

1. The clean bottle is closed with the cork and sunk to the depth at which the sample will be collected.

2. Pull out the cork with a sharp jerk of the sampler line or chain and allow the bottle to fill completely (until the bubbles stop rising to the surface).

Sampling Equipment

- Trier
  - Sludges, moist powders or granules, dry powders or granules

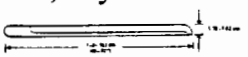

- Large trier
  - Large-grained solids

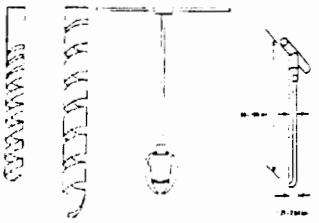

- Auger
  - Sand or packed powders and granules

3. Retrieve the bottle and cap it. The bottle can also serve as the sample container.

4. Clean the outside of the bottle, then label the it with the label provided with the Material Profile Form. Also, place the smaller numbered labels on the drums that were sampled. If more than two (2) drums are sampled per waste stream (the number of pre-printed drum labels provided), then mark the Profile number on the additional drums with a grease or paint pencil. It is important to know exactly which drums were sampled in the event that there is a problem with the analysis and the drums need to be rechecked . Record the information on the sample label with an indelible marker (e.g. "Sharpie").

Cleanup and disposal are similar to that described for COLIWASA sampling.

Dipper (a.k.a. Pond Sampler)

This device (see Figure 3) should only be used to sample free-flowing liquids and slurries in shallow well-mixed tanks and ponds because it is only capable of collecting surface samples. It consists of a telescoping aluminum pole fitted with a Varigrip that is used to grasp a beaker. As with the weighted bottle sampler, it collects grab samples that must be composited if representative sampling is desired.

Trier

A sampling trier (see Figure 4) consists of a tube cut in half lengthwise with a sharpened tip that allows penetration into sludges, moist powders or granules, and dry powders or granules in drums, other containers, truck beds, roll-off bins, and waste piles. It is generally 60 to 100 cm long with a diameter of 1.27 to 2.54 cm (one half to one inch). Particles of the material being sampled must be smaller than the diameter of the trier.

Samples are generally not regarded as representative, but could be, depending upon uniformity, cohesiveness, and depth or thickness of the material to be sampled. Usually, several samples are composited to create a representative sample.

Hand Auger

Augers (see Figure 5) are used to sample sand or packed powders and granules. They are of several designs, but all consist of sharpened spiral blades of varying lengths attached to a metal shaft and handle used to twist the point and blades into the material. If the material being sampled is cohesive, it usually is extracted as a core sample that can be used to examine stratification of the material. A complete core may in some instances be deemed to be a representative sample, but usually several samples are collected and either analyzed separately or composited.

Sampling Equipment

- Thief (a.k.a. grain sampler)
  - Dry powders or granules and sand or packed powders and granules
- Scoop
  - Moist powders or granules, dry powders or granules, sand or packed powders and granules, and large-grained solids

Thief (a.k.a. Grain Sampler)

A thief (see Figure 6) consists of two concentric tubes which are slotted at regular intervals. The outer tube is pointed so that it may be driven into the dry powders or granules and sand or packed powders and granules which it is intended to sample. The inner tube is rotated as the thief is inserted, allowing the material being sampled to be enter the slots. This device is not suitable for sampling moist or compact solids or materials that contain particles with a diameter larger than one third the width of the slots. Thieves vary in length from 60 to 100 cm and usually have a diameter of 1.27 to 2.54 cm.

As with the auger and trier, samples collected with a thief are usually regarded as grab rather than representative samples unless the waste material is known to be homogeneous.

Scoop and Shovel

Scoops and shovels are suitable for sampling moist powders or granules, dry powders or granules, sand or packed powders and granules, and large-grained solids. Unless the material being sampled is known to be homogeneous, all samples must be regarded as grab samples.

Exercise 3

An electronic components manufacturer has two drums of an unused product, Handi-Foam High Density A-Component, represented by the attached Material Safety Data Sheet (see Attachment 1). Use the S-K Sampling Guide to determine if the material is safe to sample using your standard-issue PPE (Saranex-coated apron with sleeves, nitrile gloves, and full-face respirator). Also identify the type of respirator cartridges that you must use.

Chemical Constituents	CAS #	Concentration	OK to sample? (Yes / No)

Exercise 4

A lumber company has a drum of mixed process waste (F034 & F035), containing:

Benz(a)anthracene	5-10%
Benzo(k)anthracene	2-4%
arsenic	< 2%
chromium	< 4%

Use the S-K Sampling Guide to determine if the material is safe to sample using your standard-issue PPE (Saranex-coated apron with sleeves, nitrile gloves, and full-face respirator). Also identify the type of respirator cartridges that you must use.

Chemical Constituents	CAS #	Concentration	OK to sample? (Yes / No)

Figure 1

COLIWASA

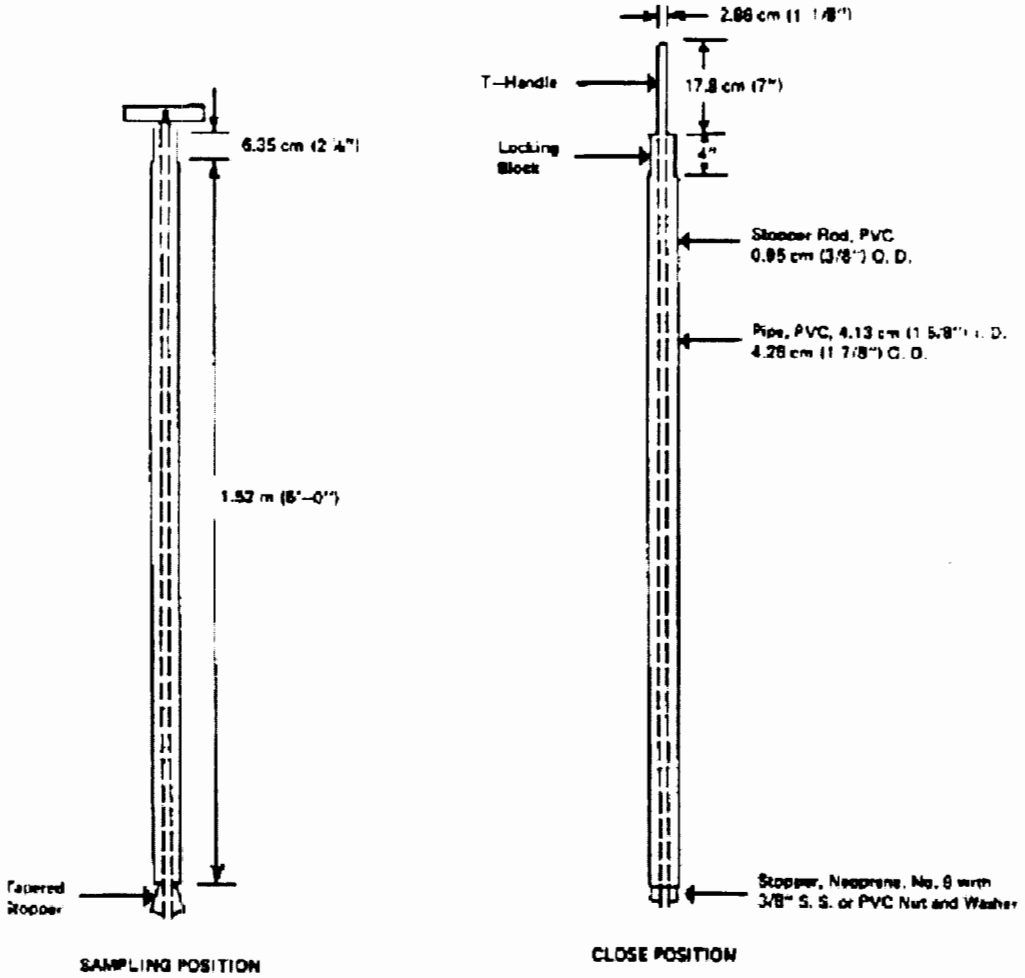

Figure 2

Weighted Bottle Sampler

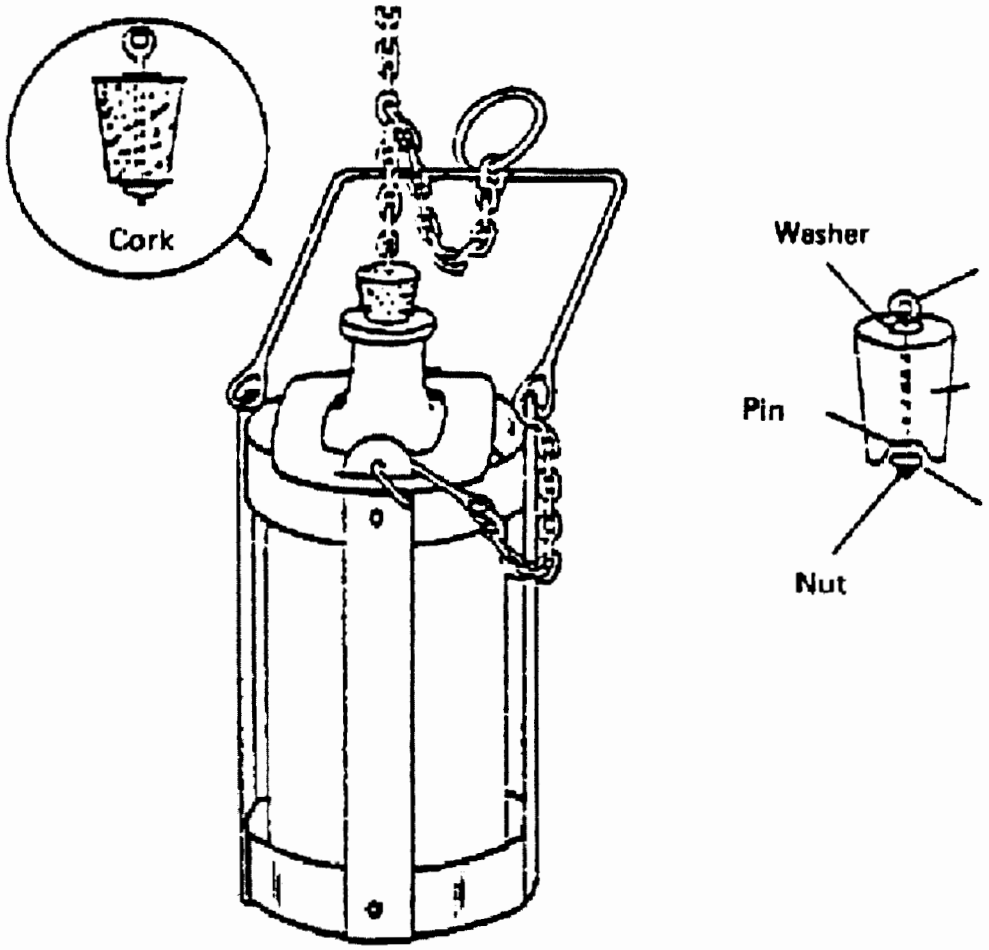

Figure 3

Dipper or Pond Sampler

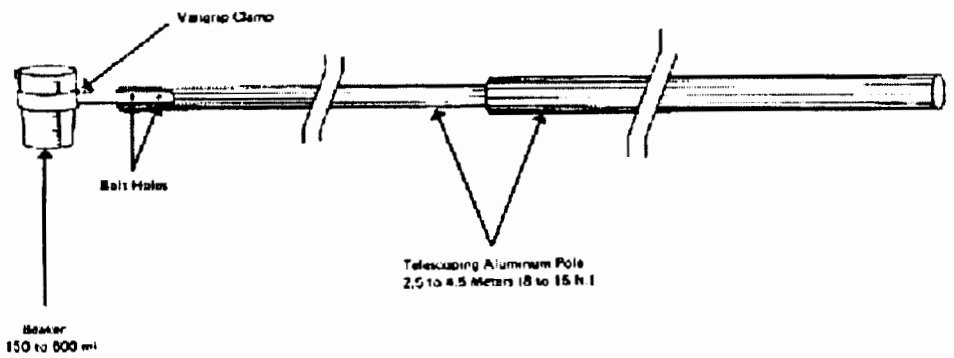

Figure 4

Sampling Trier

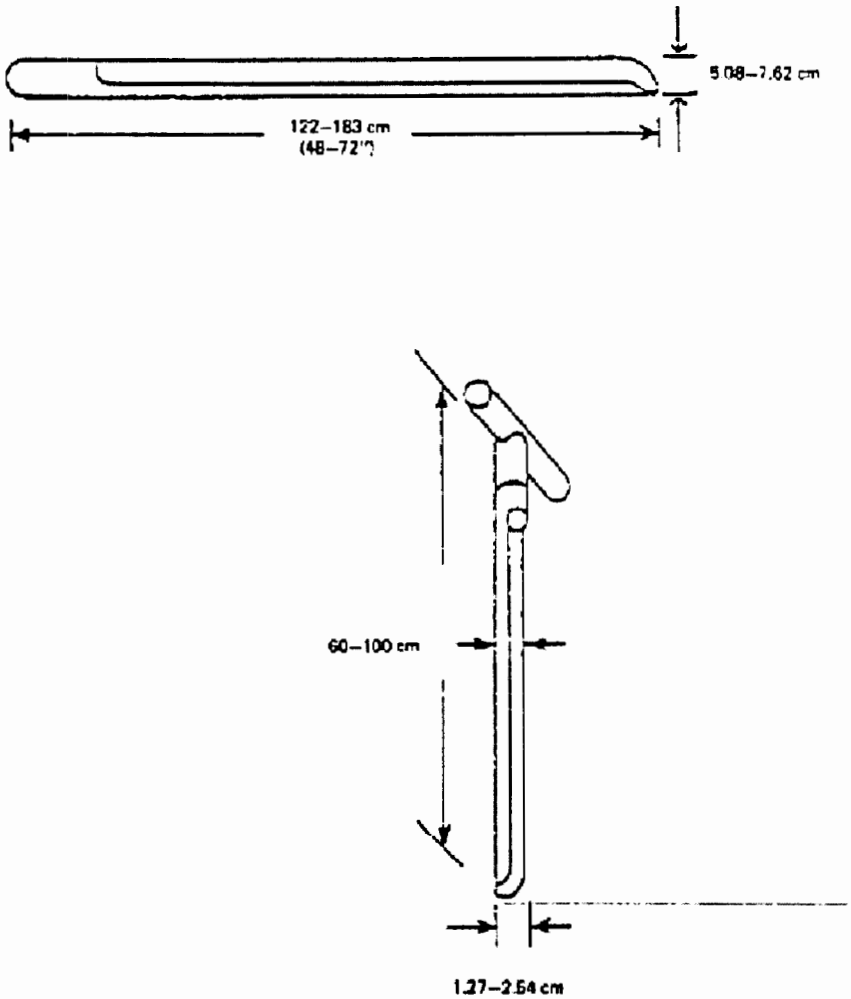

Figure 5

Hand Augers

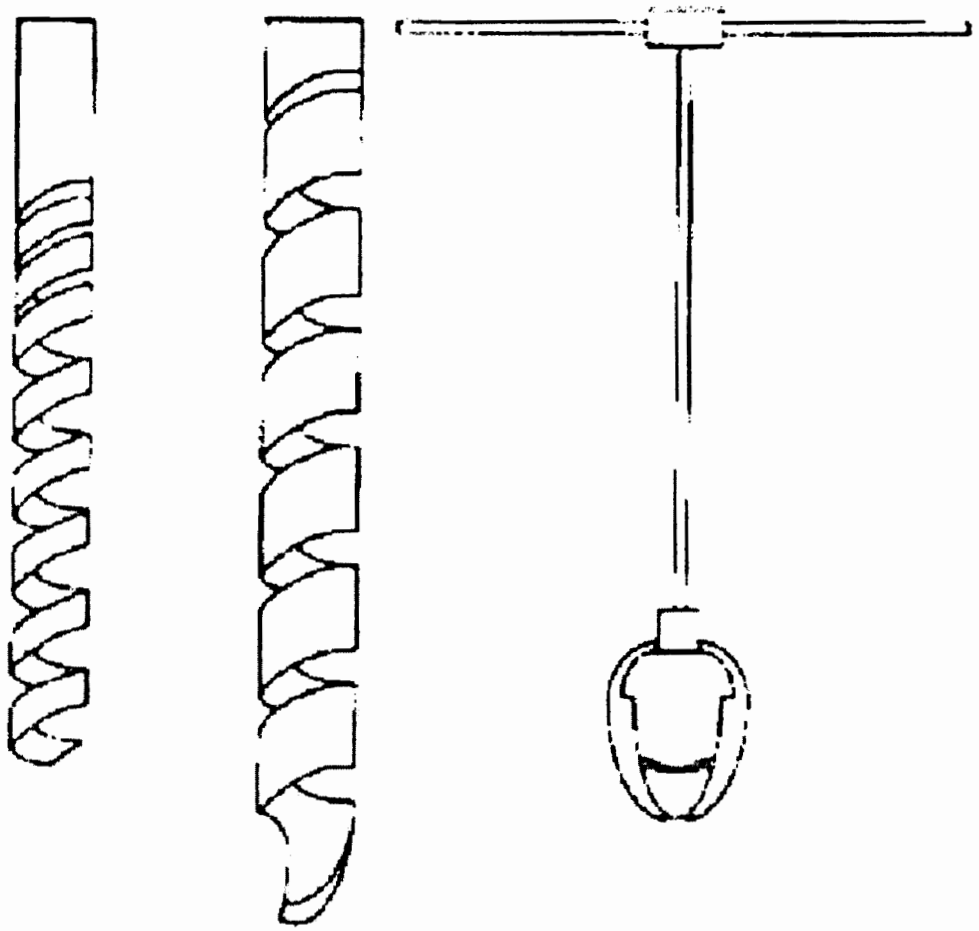

Closed-Spiral Auger **Open-Spiral Auger** **Iwan Auger**

Figure 6

Thief or Grain Sampler

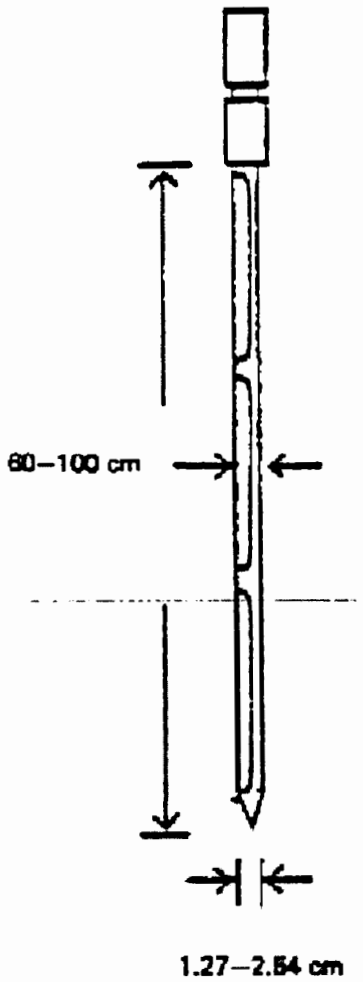

Table 1

Applicability of Sampling Equipment to Wastestreams

Waste Type	Drums	Sacks and Bags	Open-bed Trucks	Tanker Trucks	Storage Tanks, Rail Tank Cars, Bins	Waste Piles	Pits, Ponds, and Lagoons	Conveyer Belts	Pipes
Free-flowing liquids and slurries	COLIWASA	N/A	N/A	COLIWASA	Weighted Bottle	N/A	Dipper	N/A	Dipper
Sludges	Trier	N/A	Trier	Trier	Trier	*	*	*	*
Moist powders or granules	Trier	Trier	Trier	Trier	Trier	Trier	Trier	Shovel	Dipper
Dry powders or granules	Thief	Thief	Thief	Thief	*	Trier	Thief	Shovel	Dipper
Sand or packed powders and granules	Auger	Auger	Auger	Auger	Thief	Thief	*	Dipper	Dipper
Large-grained solids	Large Trier	Large Trier	Large Trier	Large Trier	Large Trier	Large Trier	Large Trier	Trier	Dipper

*This type of sampling situation can present significant sampling problems, and sampling equipment must be specifically selected or designed based on site and waste conditions. No general statement about sampling equipment can be made.

Source: Adapted from *Test Methods for Evaluating Solid Waste, Physical/Chemical Methods, EPA Publication SW-846*

Attachment 1

Material Safety Data Sheets for FOMO PRODUCTS, INC's Handi-Foam High Density A-Component and B-Component™

Appendix I— Sampling Supply List

Item	Part #	Available from:
Absorbent Pad, New Pig 4-in-1 Mat, 18" x 18"	8890	Distribution Center
Bucket, Plastic	None	Household Product
Bucket, Stainless Steel		
Clor-D-Tect Kit, Dexsil Chemical Corp.	8856	Distribution Center
COLIWASA, Disposable, for non-TCLP samples	8845	Distribution Center
COLIWASA, for TCLP samples	None	Technical Center Tech. Support Dept.
Eyewash, Saline Solution	8892	Distribution Center
Gloves, Nitrile, 16 mil	8738	Distribution Center
Gloves, Nitrile, N-Dex, 8 mil	8737	Distribution Center
Grounding & Bonding Strap	3730	Distribution Center
Hardhat	7012	Distribution Center
pH Test Strips	1400	Distribution Center
Sample Kit, for TCLP analysis	None	Technical Center Tech. Support Dept.
Sample Packaging Kit, for air shipment		
Sample Packaging Kit, for ground shipment		
Sample Packaging Kit, for non-hazardous material		
Saranex-Coated Tyvek Apron with Sleeves	8747	Distribution Center
Scoop, Large Plastic COM Service	3605	Distribution Center
Scoop/Spatula, Small Plastic (for sampling dry granular solids)	H-06283-30	Cole-Parmer (800) 323-4340
Scraper, Non-sparking	11424	Lab Safety Supply (800) 356-0783
S-K Material Profile	1382	Distribution Center
Wipes	8876	Distribution Center
Wrench, Torque, Combination Bung & Bolt		

ET 143 Test: Hazardous Waste Sampling

1. Never sample:

   a) unknowns

   b) in confined spaces

   c) alone

   d) all of the above

   e) b and c only

2. Drums whose contents are unknown must be sampled using grounding and bonding procedures, since they could contain flammable liquids.

   True

   False

1. Your pre-sampling site survey must include a survey of emergency equipment, which includes the following items:

   Nearest emergency exit, eye wash, and shower

   Spill control equipment

   Fire extinguishers and alarm pulls

   Telephone

1. A drum that is warmer than would normally be expected, given the ambient conditions, may indicate one of two things:

   The contents of the drum are undergoing chemical reaction, or

   the drum was recently filled with hot material

1. Besides conducting the sampling site survey, what 2 things should be done prior to sampling a hazardous waste?

   Complete a Material Profile

   Don PPE

1. When should you follow the grounding and bonding procedure?

   a) only when the contents are unknown

   b) whenever the flash point of the contents is known to be below 200° F

   c) whenever the flash point of the contents is not known to be below 200° F

   d) always

   e) any time the drum contains a hydrocarbon

2. What is the proper order for connection of a grounding cable?

   a) Connect the cable to the ground first, then to the container.

   b) Connect the cable to the container first, then to the ground.

   c) Any order is OK as long as the connection is secure and the "ground" is truly grounded.

3. What is the proper order for disconnection of a grounding cable?

   a) Disconnect the cable from the ground first, then from the container.

   b) Disconnect the cable from the container first, then from the ground.

   c) It does not matter.

4. If a drum has two bungs, which one should be slightly loosened first, and why?

   Loosen the small bung first to relieve excess pressure. The smaller bung will have less total force exerted on it than the larger one.

1. To representatively sample a batch of 17 drums from a single non-corrosive wastestream, how many drums must be sampled?

   5 drums must be sampled (Square Root of 17 = 4 + a fraction; therefore, rounded up to the next whole number, the number to be sampled is 5.)

   How would you select which drums to sample?

   Number each drum; then number 17 small pieces of paper, mix them up and draw 5 of them out of a "hat".