SNL 2002

Department of Energy
National Nuclear Security Administration
Albuquerque Operations Office
Office of Kirtland Operations
P.O. Box 5400
Albuquerque, New Mexico 87185-5400

MAR 27 2002

CERTIFIED MAIL – RETURN RECEIPT REQUESTED

Mr. James P. Bearzi, Bureau Chief
Hazardous Waste Bureau
New Mexico Environment Department
2905 Rodeo Park Road East, Building 1
Santa Fe, NM 87505

Dear Mr. Bearzi:

The US Department of Energy (DOE) and Sandia Corporation (Sandia) submitted a General Part B Permit Request to the New Mexico Environment Division (NMED) on February 6, 2002 for waste management activities regulated under New Mexico Hazardous Waste Act and the Resource Conservation and Recovery Act (RCRA) at Sandia National Laboratories/New Mexico (SNL/NM).

In response to a request from Mr. Cornelius Amindyas of NMED, Sandia has been preparing an electronic copy of the General Part B Permit Request. During preparation of the electronic copy, we discovered that three pages were inadvertently omitted from the General Part B Permit Request that we submitted on February 6.

The three pages are enclosed. All three are to be inserted in Volume III of the General Part B Permit Request. The first figure (Attachment A) is to be inserted after Figure 3-1a in the section labeled "CAMU". The remaining two figures (Attachment B) are to be inserted after the list of figures in Appendix A of the section labeled "Temporary Unit (Soil Stabilization Unit)".

If you have any questions, please contact John Gould at (505) 845-6089.

Sincerely,

Michael J. Zamorski, Director
Office of Kirtland Site Operations

Enclosures

SNL 1128

C. Amindyas, HWB (3)
G. Miller, USEPA Region 6
L. King, USEPA Region 6

cc w/o enclosures:
Waste Manager, OKSO
L. West, MS 1114, 3100
P. Yourick, MS 1050, 3120
J. Thompson, MS 1151, 3125
A. Reiser, MS 1151, 3125

Attachment A

Figure 3-1
Figure to be inserted in Volume III, section labeled "CAMU"

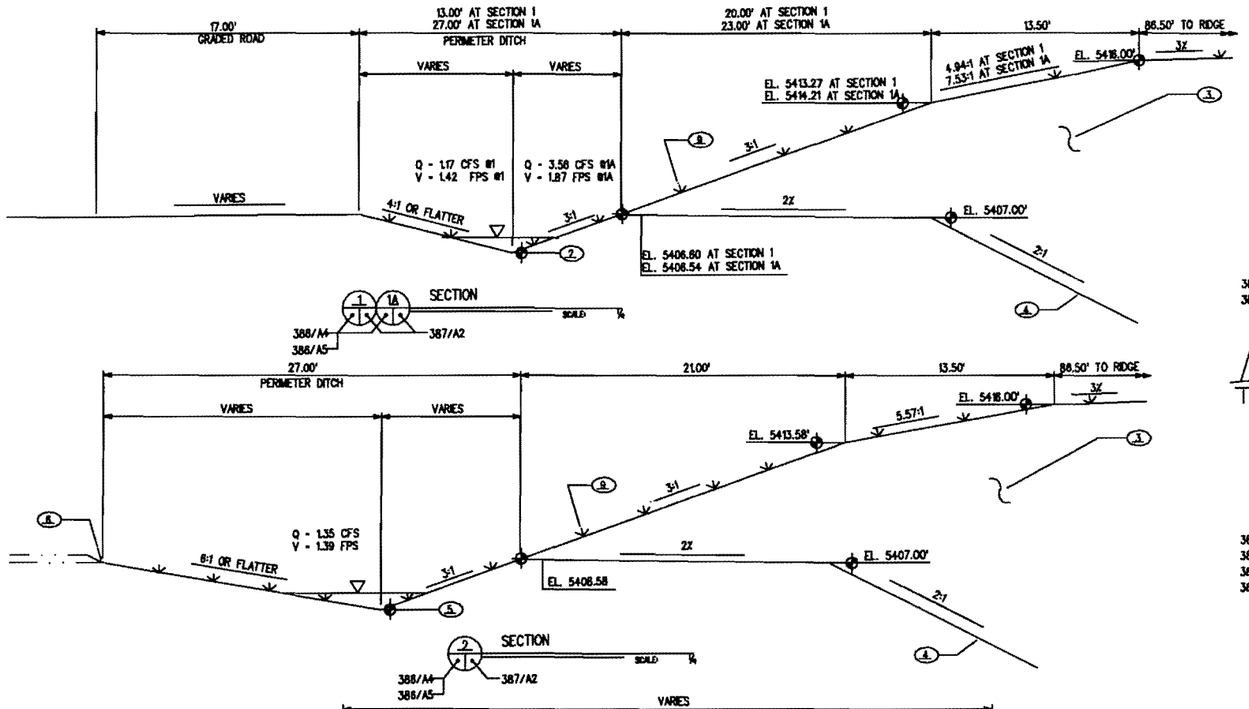

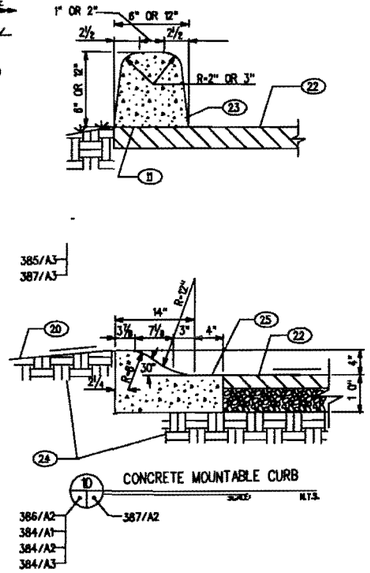

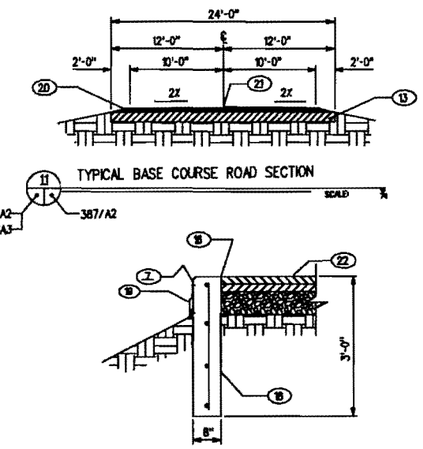

KEYED NOTES

1. NOT USED.
2. EXISTING GRADE.
3. DISPOSAL CELL CAP, SEE 104385/A4 AND 104386/A5.
4. DISPOSAL CELL FLOOR, SEE 104385/A2 AND 104386/A4.
5. DITCH ELEVATION, SEE PLAN 104386/A2.
6. SHOULDER OF EXISTING ROAD.
7. CAULK.
8. VADOSE ZONE MONITORS, SEE 104384/A4
9. SEED SLOPES AT 4:1 AND STEEPER IN ACCORDANCE WITH SPECIAL SPECIFICATION.
10. 2" ASPHALT SURFACE COURSE, 1800 POUND STABILITY, PLACED IN 1 LIFT.
11. TACK COAT AS PER SPECIFICATIONS.
12. 4" ASPHALT SURFACE COURSE, 1800 POUND STABILITY, PLACED IN 2-2" LIFTS. BOTTOM LIFT SHALL BE GRADATION TYPE B.
13. 12" SUBGRADE PREPARATION COMPACTED TO A MINIMUM 95% COMPACTION.
14. WEST SIDE OF ROADWAY OR WEST SIDE OF SITE.
15. 6" AGGREGATE BASE COURSE.
16. PAVE TIGHT AGAINST WALL.
17. DELETED.
18. CONCRETE CUTOFF WALL WITH 4-#4 HORIZONTAL AND #4 VERTICAL AT 18" O.C.
19. GALVANIZED COUNTER FLASHING, SECURE TO WALL WITH HILTI POWER DRIVEN FASTENER #W22512 AT 24" O.C.
20. GRADE AWAY FROM CURB.
21. CROWN.
22. PAVING.
23. ASPHALT CONCRETE CURB.
24. COMPACTED SUBGRADE.
25. CONCRETE MOUNTABLE CURB AND GUTTER.
26. DELETED.

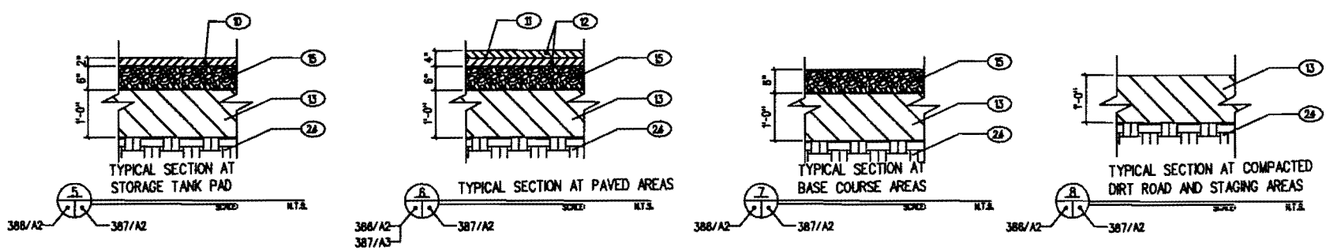

P.O. OR W.O. PROJECT NO.	REV	DATE	DESCRIPTION	DWN	CKD	APP

U.S. DEPARTMENT OF ENERGY
MANAGEMENT SUPPORT DIVISION
KIRTLAND AIR FORCE BASE EAST — ALBUQUERQUE, NEW MEXICO

SANDIA NATIONAL LABORATORIES PLANT ENGINEERING
ALBUQUERQUE, NEW MEXICO, LIVERMORE, CALIFORNIA, TONOPAH, NEVADA

SECTIONS AND DETAILS

HAZARDOUS WASTE CORRECTIVE ACTION MANAGMENT UNIT

P.A. OR S.A.	CM4086
PROJECT NO.	TW0847
DRAWN BY	DEH
CHECKED BY	
APPROVED BY	BC
DATE	7/28/1999

CAD DRAWING
COMPUTER SYSTEMS DEPT. 7901
SITE UTILITIES DEPT. 7909
FILE NAME: cp30071sprw.dwg
REFERENCE FILES:

CIVIL — CAMU

IT CORPORATION

SIZE D+ DRAWING NO./SHEET 104385/A02 SHEET 23

Volume III.Part5.CAMU. Fig3-1

Attachment B

Figures to be inserted in Volume III, section labeled Appendix A under "Temporary Unit (Soil Stabilization Unit)"

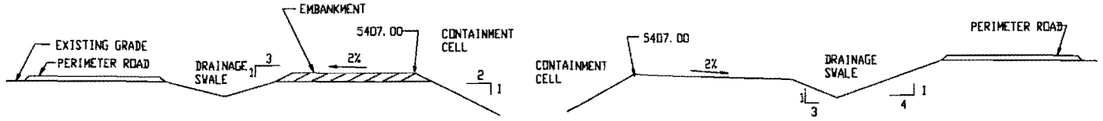

SCALE: 1 SECTION - WEST NOT TO SCALE
384/A4 385/A2

SCALE: 2 SECTION - EAST NOT TO SCALE
384/A4 385/A2

GENERAL NOTES

⬡ SEE MECHANICAL EQUIPMENT SCHEDULE, SHEET 385/A6.

ALL WORK ON THIS SHEET IS PHSE 2

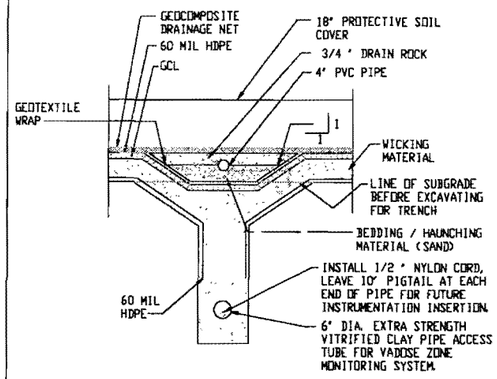

SCALE: 3 4" PVC PIPE TRENCH - BOTTOM NOT TO SCALE
384/A4 385/A2

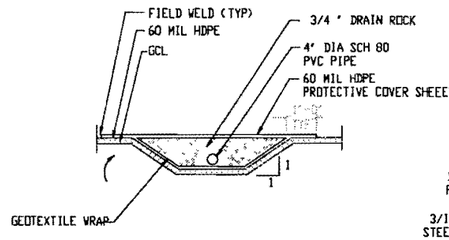

SCALE: 4 4" PVC PIPE TRENCH-SOUTH SLOPE NOT TO SCALE
384/A4 385/A2

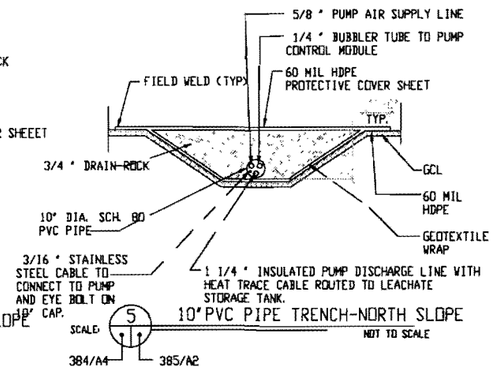

SCALE: 5 10"PVC PIPE TRENCH-NORTH SLOPE NOT TO SCALE
384/A4 385/A2

KEYED NOTES

1. BEDDING / HAUNCHING MATERIAL PLACED UNDER 4" PIPE IN BOTTOM LCRS TRENCH OVER 1% SLOPE TO EDGE OF SUMP. BEDDING/HAUNCHING MATERIAL TRANSITIONS AT 5% SLOPE FROM 4" TO 0" OVER FINAL 5' OF LCRS TRENCH PRIOR TO ENTERING SUMP.
2. UPPER 60 MIL HDPE PLACED IN SUMP AREA ONLY WITH 5' SIDEWALL OVERLAP ON NORTH END OF SUMP AND 3' OVERLAP IN ALL OTHER AREAS - FIELD WELDED TO LOWER 60 MIL HDPE LINER.

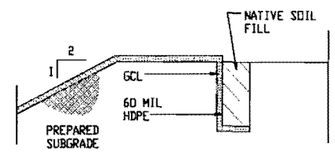

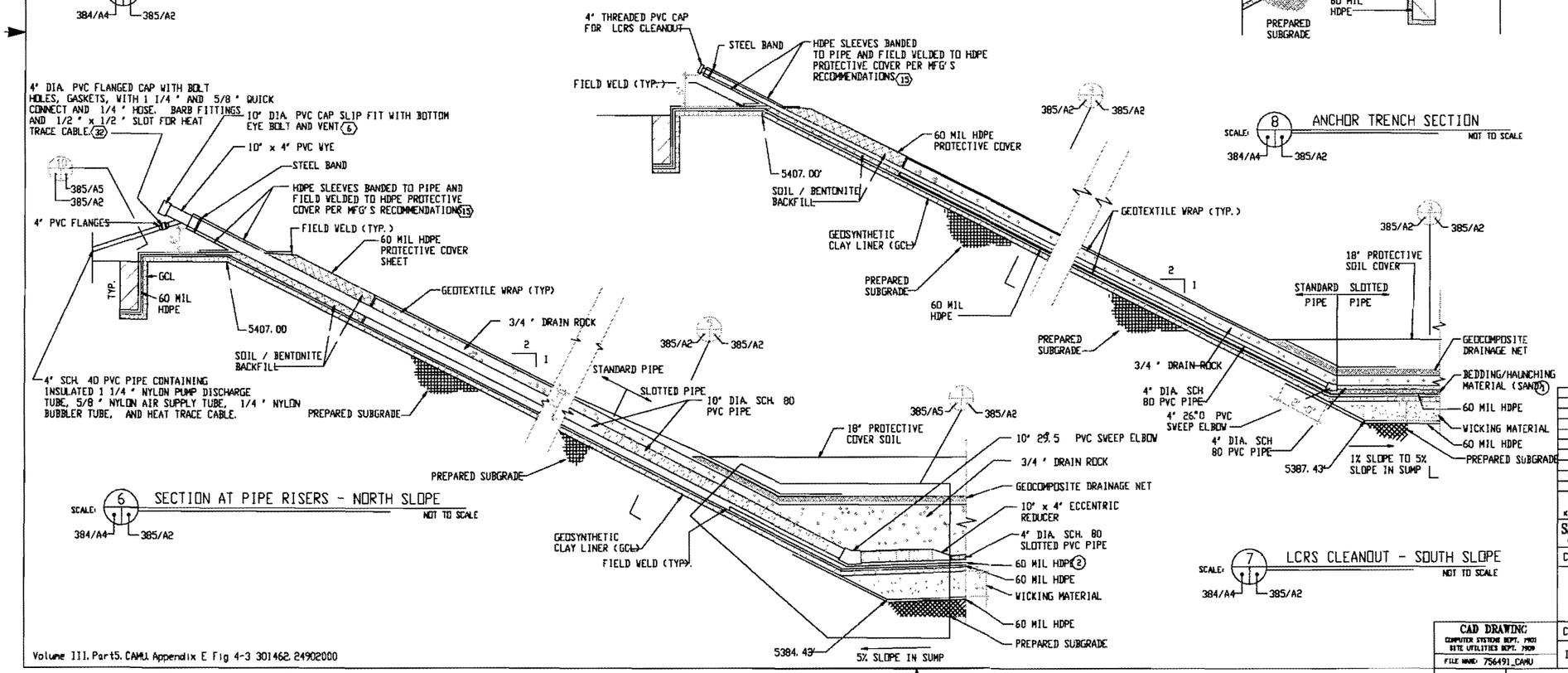

SCALE: 6 SECTION AT PIPE RISERS - NORTH SLOPE NOT TO SCALE
384/A4 385/A2

SCALE: 7 LCRS CLEANOUT - SOUTH SLOPE NOT TO SCALE
384/A4 385/A2

SCALE: 8 ANCHOR TRENCH SECTION NOT TO SCALE
384/A4 385/A2

REV	DATE	DESCRIPTION	DWN	CKD	APP

U. S. DEPARTMENT OF ENERGY
MANAGEMENT SUPPORT DIVISION
KIRTLAND AIR FORCE BASE EAST ALBUQUERQUE, NEW MEXICO

SANDIA NATIONAL LABORATORIES PLANT ENGINEERING
ALBUQUERQUE, NEW MEXICO LIVERMORE, CALIFORNIA TONOPAH, NEVADA

CONTAINMENT CELL DETAILS

HAZARDOUS WASTE CORRECTIVE ACTION MANAGEMENT UNIT

PROJECT NO.	6463-CM666
DRAWN BY	DEH
CHECKED BY	BW
APPROVED BY	
DATE	7/29/96
SEQ.	11

CIVIL

IT CORPORATION

SIZE D+ DRAWING NO. /SHEET 104385/A2

CAD DRAWING
COMPUTER SYSTEMS DEPT. 7901
SITE UTILITIES DEPT. 7909
FILE NAME: 756491_CAMU
REFERENCE FILES:

Volume III, Part5, CAMU Appendix E Fig 4-3 301462.24902000

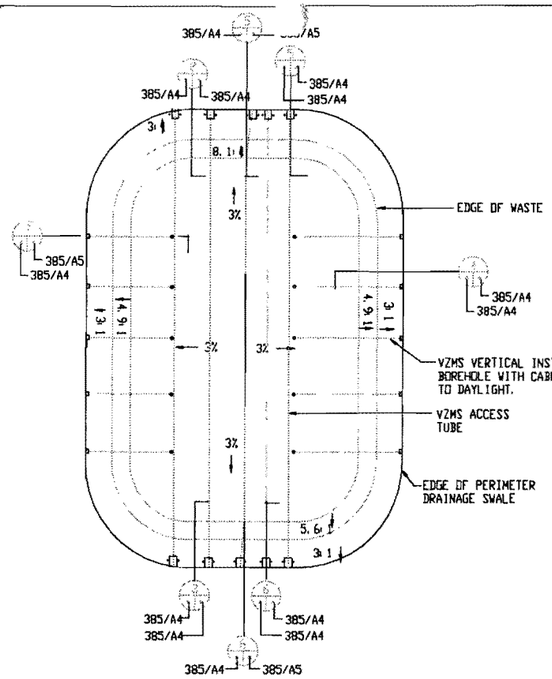

FINAL COVER PLAN (1) — SCALE: 1" = 50'-0"

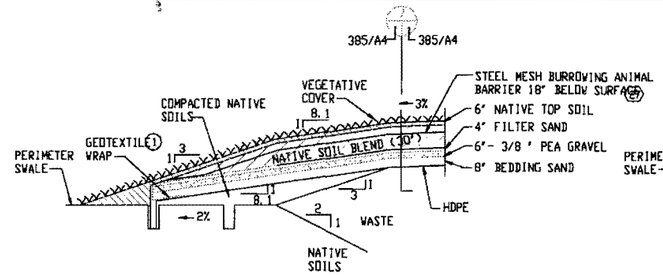

NORTH COVER SYSTEM SECTION (2) — NOT TO SCALE

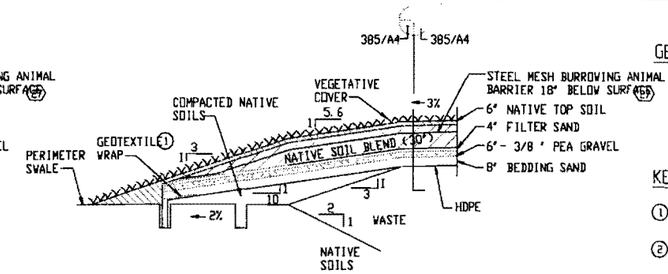

SOUTH COVER SYSTEM SECTION (3) — NOT TO SCALE

GENERAL NOTES

⬡ SEE MECHANICAL EQUIPMENT SCHEDULE, SHEET 385/A6.

KEYED NOTES

1. GEOTEXTILE WRAP WILL CONSIST OF 20' WIDE ROLL WRAPPED AROUND SAND.
2. NATIVE TOP SOIL WILL CONSIST OF SEEDED, SANDY LOAM STOCKPILED FROM CONTAINMENT CELL GRADING / EXCAVATING ACTIVITIES.
3. STEEL MESH TO IMPEDE BURROWING ANIMALS AT 18" FROM SURFACE (27)
4. NATIVE SOIL BLEND
5. THE 10" SAND /PEA GRAVEL LIFT IS THE CAPILLARY BARRIER.
6. 3 FEET OF CABLE AND TUBING WILL BE COILED IN ROAD BOX.
7. EXPANSIVE SOIL/BENTONITE MIXTURE
8. THERMISTOR WIRES
9. 1/4 " DIA. TEFLON™ TUBES FOR SOIL GAS (20) PLING.
10. TDR COAXIAL CABLES (17)
11. COLOR-CODED IDENTITY TAG ON EACH WIRE, TUBE, AND CABLE. TDR CABLE WITH RADIO SHACK # 278-104 BNC CONNECTOR AND PLASTIC PROTECTIVE CAP, TEFLON TUBE WITH FISCHER SCIENTIFIC 1/4 " - 28 FLAT-BOTTOMED PLUG # 05-700-111. ELECTRICAL TAPE PLACED OVER ENDS OF THERMISTOR W (18) S.
12. SILICONE SEAL INSIDE PVC CONDUIT
13. HDPE PIPE SLEEVES BANDED TO CONDUIT AND FIELD WELDED AS PER MANUFACTURES RECOMMENDATIONS (15)

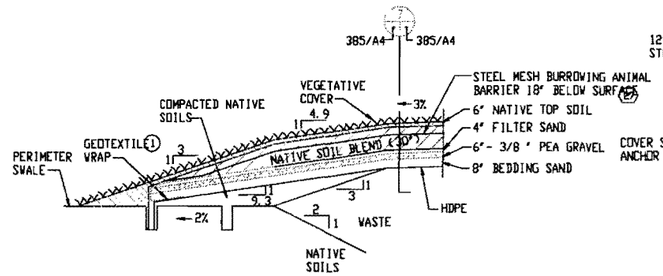

EAST/WEST COVER SYSTEM SECTION (4) — NOT TO SCALE

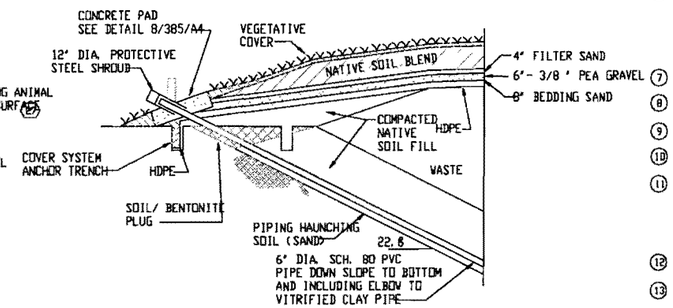

VZMS ACCESS TUBE NORTH SECTION (5) — NOT TO SCALE

NOTE:
NORTH END ACCESS TUBES WILL BE POSITIONED ~22.6 OFF HORIZONTAL AND SOUTH END ACCESS TUBES 23.8 OFF HORIZONTAL.

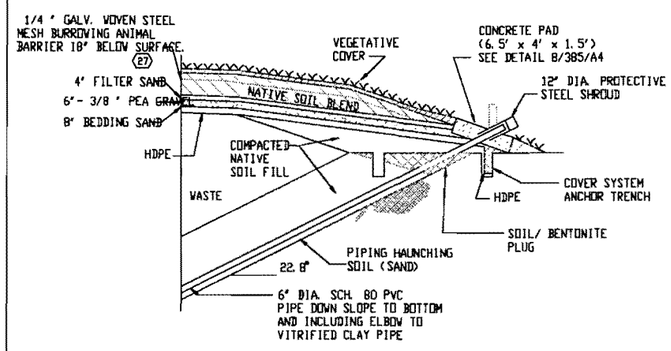

VZMS ACCESS TUBE SOUTH SECTION (6) — NOT TO SCALE

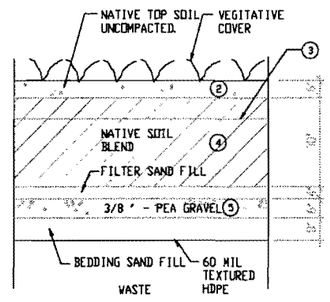

TYPICAL COVER SECTION (7) — NTS

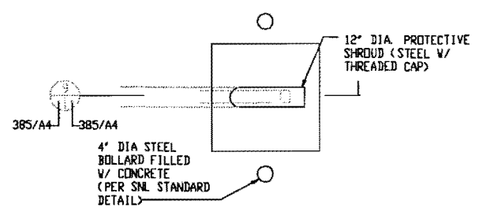

PLAN VIEW-ACCESS TUBE DAYLIGHT (8) — NOT TO SCALE

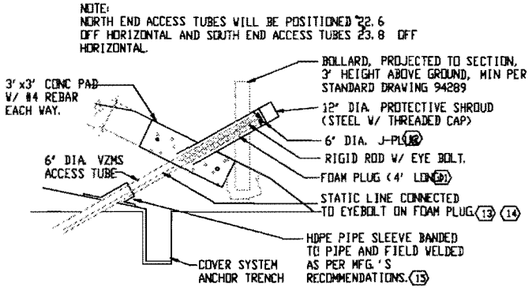

SECTION - ACCESS TUBE DAYLIGHT (9) — NOT TO SCALE

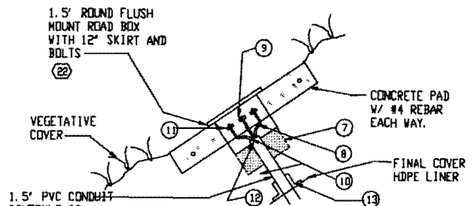

NOTE:
THE THERMISTOR WIRES, TEFLON™ TUBES FOR SOIL GAS SAMPLING, AND TDR COAXIAL CABLES WILL EXTEND FIVE FEET BEYOND THE END OF THE SCHEDULE 80 1.5" PVC CONDUIT. WHEN NOT IN USE THE WIRES, TUBES, AND CABLES WILL BE COILED INSIDE THE ROAD BOX.

VZMS-VERT. SENSOR ARRAY DAYLIGHT DETAIL (10) — NOT TO SCALE

P.O. OR W.O. / PROJECT NO.	REV	DATE	DESCRIPTION	DWN	CKD	APP

U. S. DEPARTMENT OF ENERGY
MANAGEMENT SUPPORT DIVISION
KIRTLAND AIR FORCE BASE EAST — ALBUQUERQUE, NEW MEXICO

SANDIA NATIONAL LABORATORIES PLANT ENGINEERING
ALBUQUERQUE, NEW MEXICO — LIVERMORE, CALIFORNIA — TONOPAH, NEVADA

CONTAINMENT CELL CAP DETAILS

HAZARDOUS WASTE CORRECTIVE ACTION MANAGEMENT UNIT

CIVIL

IT CORPORATION

P.O. OR W.O.	
PROJECT NO.	6463-CN4666
DRAWN BY	DEH
CHECKED BY	BV
APPROVED BY	
DATE	7/29/96
SIZE	D+
DRAWING NO. /SHEET	104385/A4
SEQ.	13

CAD DRAWING
COMPUTER SYSTEMS DEPT. 7901
SITE UTILITIES DEPT. 7509
FILE NAME: 763491_CAMU
REFERENCE FILES:

Attachment A

Figure 3-1
Figure to be inserted in Volume III, section labeled "CAMU"

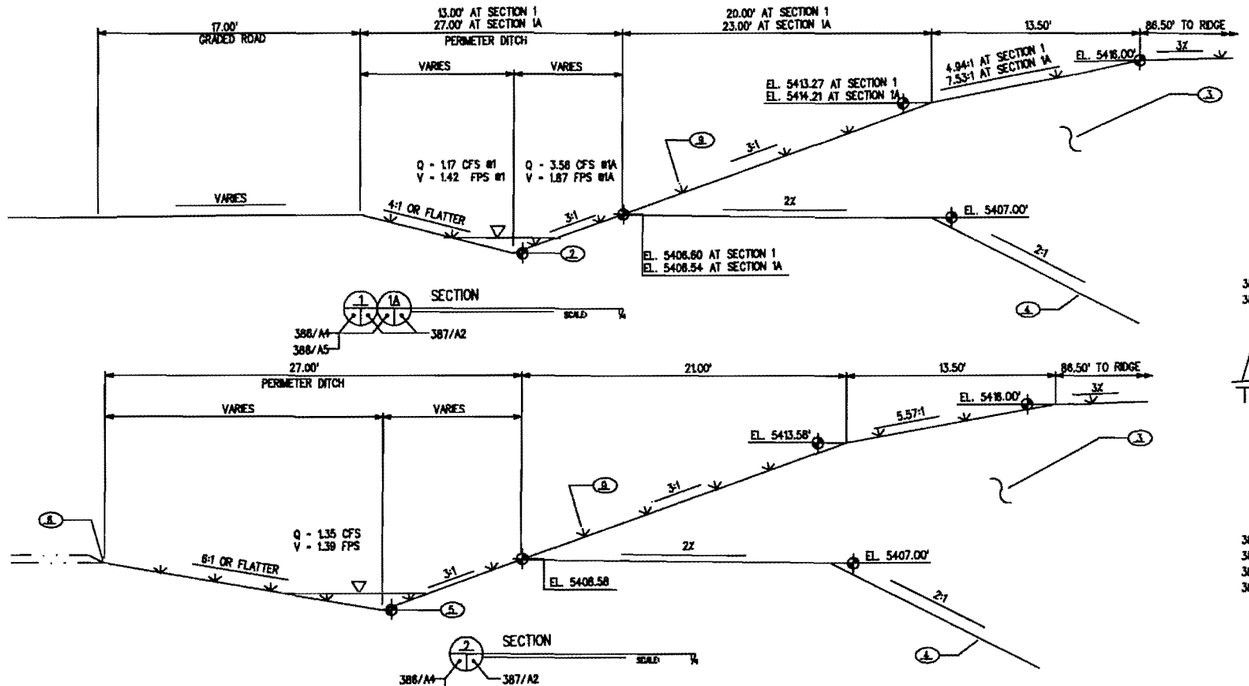

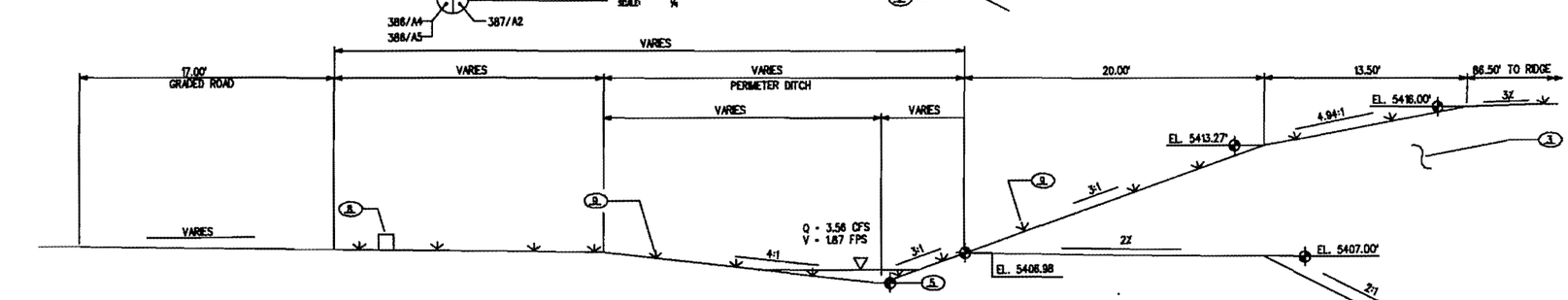

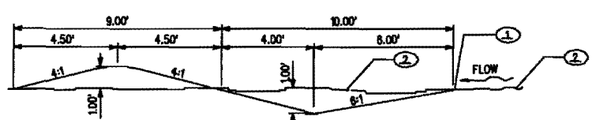

TYPICAL DITCH AND DYKE SECTION

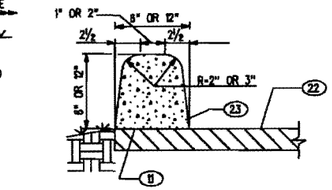

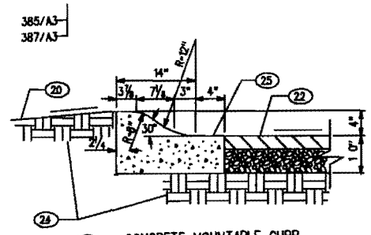

CONCRETE MOUNTABLE CURB

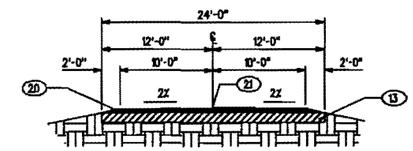

TYPICAL BASE COURSE ROAD SECTION

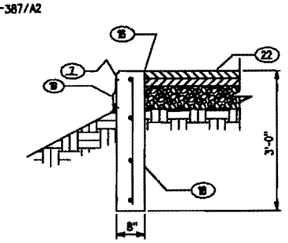

CUT-OFF WALL SECTION

KEYED NOTES

1. NOT USED.
2. EXISTING GRADE.
3. DISPOSAL CELL CAP, SEE 104385/A4 AND 104386/A5.
4. DISPOSAL CELL FLOOR, SEE 104385/A2 AND 104386/A4.
5. DITCH ELEVATION, SEE PLAN 104386/A2.
6. SHOULDER OF EXISTING ROAD.
7. CAULK.
8. VADOSE ZONE MONITORS, SEE 104384/A4
9. SEED SLOPES AT 4:1 AND STEEPER IN ACCORDANCE WITH SPECIAL SPECIFICATION.
10. 2" ASPHALT SURFACE COURSE, 1800 POUND STABILITY, PLACED IN 1 LIFT.
11. TACK COAT AS PER SPECIFICATIONS.
12. 4" ASPHALT SURFACE COURSE, 1800 POUND STABILITY, PLACED IN 2-2" LIFTS. BOTTOM LIFT SHALL BE GRADATION TYPE B.
13. 12" SUBGRADE PREPARATION COMPACTED TO A MINIMUM 95% COMPACTION.
14. WEST SIDE OF ROADWAY OR WEST SIDE OF SITE.
15. 6" AGGREGATE BASE COURSE.
16. PAVE TIGHT AGAINST WALL.
17. DELETED.
18. CONCRETE CUTOFF WALL WITH 4-#4 HORIZONTAL AND #4 VERTICAL AT 18" O.C.
19. GALVANIZED COUNTER FLASHING, SECURE TO WALL WITH HILTI POWER DRIVEN FASTENER #HC22S12 AT 24" O.C.
20. GRADE AWAY FROM CURB.
21. CROWN.
22. PAVING.
23. ASPHALT CONCRETE CURB.
24. COMPACTED SUBGRADE.
25. CONCRETE MOUNTABLE CURB AND GUTTER.
26. DELETED.

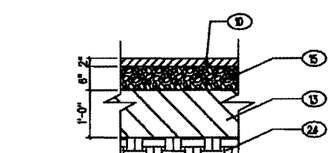

TYPICAL SECTION AT STORAGE TANK PAD

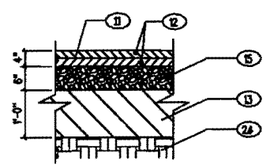

TYPICAL SECTION AT PAVED AREAS

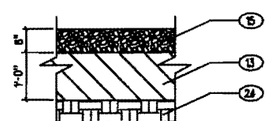

TYPICAL SECTION AT BASE COURSE AREAS

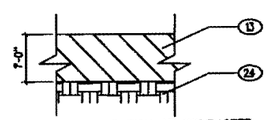

TYPICAL SECTION AT COMPACTED DIRT ROAD AND STAGING AREAS

P.O. OR W.O. / PROJECT NO.	REV	DATE	DESCRIPTION	DWN	CKD	APP

U.S. DEPARTMENT OF ENERGY
MANAGEMENT SUPPORT DIVISION
KIRTLAND AIR FORCE BASE EAST — ALBUQUERQUE, NEW MEXICO

SANDIA NATIONAL LABORATORIES PLANT ENGINEERING
ALBUQUERQUE, NEW MEXICO; LIVERMORE, CALIFORNIA; TONOPAH, NEVADA

SECTIONS AND DETAILS

HAZARDOUS WASTE CORRECTIVE ACTION MANAGMENT UNIT

P.O. OR W.O.	CH1686
PROJECT NO.	TW0847
DRAWN BY	DEH
DESIGNED BY	
APPROVED BY	BC
DATE	7/29/1988

CAD DRAWING
COMPUTER SYSTEMS DEPT. 7931
SITE UTILITIES DEPT. 7928
FILE NAME: dg3001camu.dwg
REFERENCE FILES:

CIVIL — CAMU
IT CORPORATION
SIZE D+ DRAWING NO./SHEET 104385/A02 SEQ. 23

Volume III.Part5.CAMU. Fig3-1

Attachment B

Figures to be inserted in Volume III, section labeled Appendix A under "Temporary Unit (Soil Stabilization Unit)"

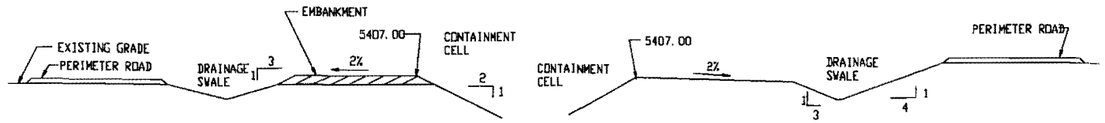

SCALE: 1 SECTION - WEST NOT TO SCALE
384/A4 385/A2

SCALE: 2 SECTION - EAST NOT TO SCALE
384/A4 385/A2

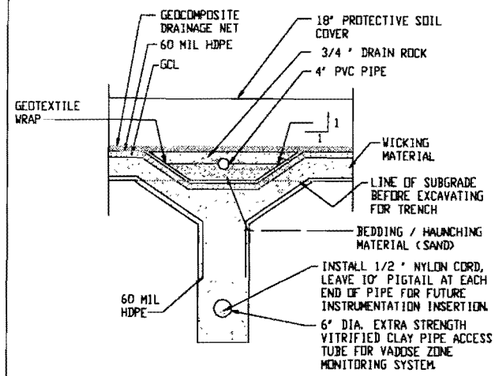

SCALE: 3 4" PVC PIPE TRENCH - BOTTOM NOT TO SCALE
384/A4 385/A2

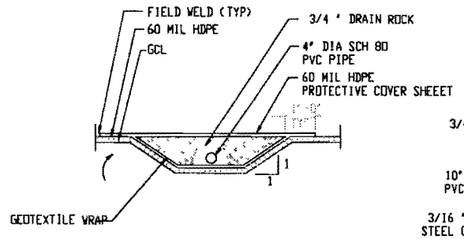

SCALE: 4 4" PVC PIPE TRENCH-SOUTH SLOPE NOT TO SCALE
384/A4 385/A2

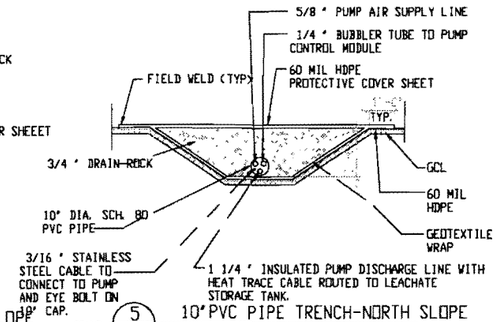

SCALE: 5 10"PVC PIPE TRENCH-NORTH SLOPE NOT TO SCALE
384/A4 385/A2

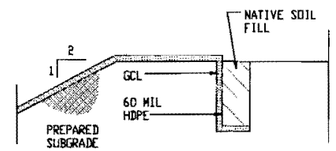

GENERAL NOTES

SEE MECHANICAL EQUIPMENT SCHEDULE, SHEET 385/A6.

ALL WORK ON THIS SHEET IS PHSE 2

KEYED NOTES

1. BEDDING / HAUNCHING MATERIAL PLACED UNDER 4" PIPE IN BOTTOM LCRS TRENCH OVER 1% SLOPE TO EDGE OF SUMP. BEDDING/HAUNCHING MATERIAL TRANSITIONS AT 5% SLOPE FROM 4" TO 0" OVER FINAL 5' OF LCRS TRENCH PRIOR TO ENTERING SUMP.
2. UPPER 60 MIL HDPE PLACED IN SUMP AREA ONLY WITH 5' SIDEWALL OVERLAP ON NORTH END OF SUMP AND 3' OVERLAP IN ALL OTHER AREAS - FIELD WELDED TO LOWER 60 MIL HDPE LINER.

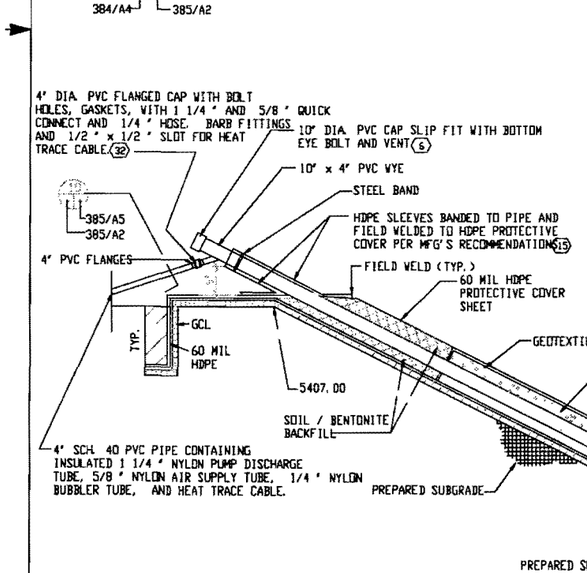

SCALE: 6 SECTION AT PIPE RISERS - NORTH SLOPE NOT TO SCALE
384/A4 385/A2

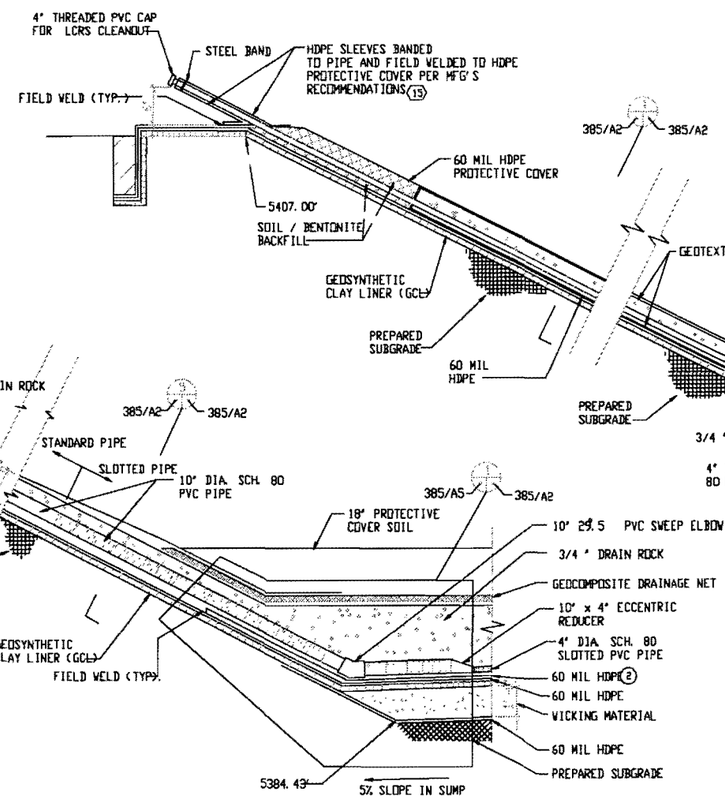

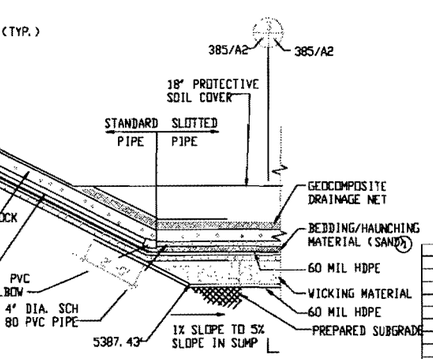

SCALE: 8 ANCHOR TRENCH SECTION NOT TO SCALE
384/A4 385/A2

SCALE: 7 LCRS CLEANOUT - SOUTH SLOPE NOT TO SCALE
384/A4 385/A2

P.O. OR W.O. PROJECT NO.	REV	DATE	DESCRIPTION	DWN	CKD	APP

U. S. DEPARTMENT OF ENERGY
MANAGEMENT SUPPORT DIVISION
KIRTLAND AIR FORCE BASE EAST ALBUQUERQUE, NEW MEXICO

SANDIA NATIONAL LABORATORIES PLANT ENGINEERING
ALBUQUERQUE, NEW MEXICO; LIVERMORE, CALIFORNIA; TONOPAH, NEVADA

CONTAINMENT CELL DETAILS

HAZARDOUS WASTE CORRECTIVE ACTION MANAGEMENT UNIT

CIVIL

IT CORPORATION

P.O. OR W.O.	
PROJECT NO.	6463-CM666
DRAWN BY	DEH
CHECKED BY	BW
APPROVED BY	
DATE	7/29/96
SIZE	D+
DRAWING NO. /SHEET	104385/A2
SEQ.	11

CAD DRAWING
COMPUTER SYSTEMS DEPT. 7901
SITE UTILITIES DEPT. 7959
FILE NAME: 756491_CAMU
REFERENCE FILES:

Volume III. Part5. CAMU. Appendix E Fig 4-3 301462. 24902000

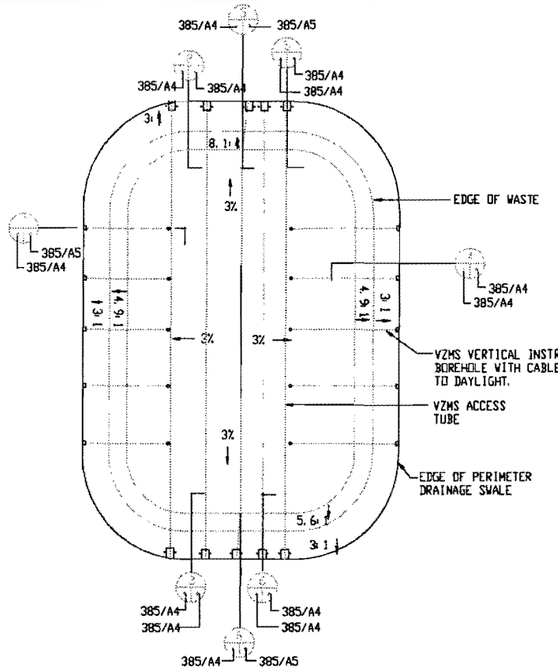

SCALE: 1 — FINAL COVER PLAN — 1" = 50'-0" — 385/A4 385/A4

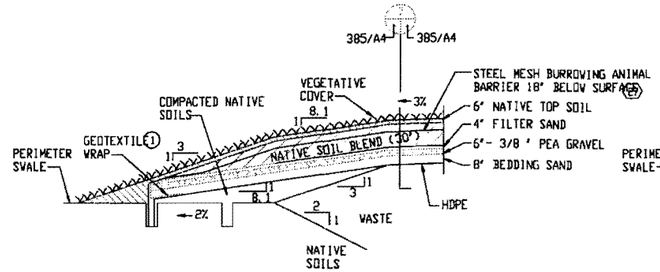

SCALE: 2 — NORTH COVER SYSTEM SECTION — NOT TO SCALE — 385/A4 385/A4

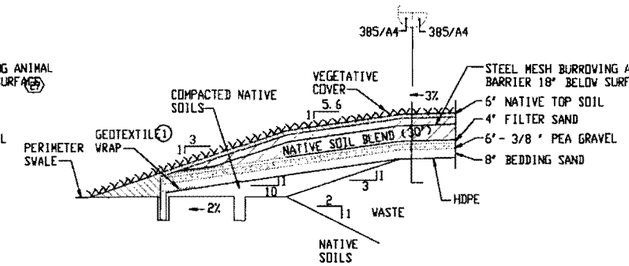

SCALE: 3 — SOUTH COVER SYSTEM SECTION — NOT TO SCALE — 385/A4 385/A4

GENERAL NOTES

SEE MECHANICAL EQUIPMENT SCHEDULE, SHEET 385/A6.

KEYED NOTES

1. GEOTEXTILE WRAP WILL CONSIST OF 20' WIDE ROLL WRAPPED AROUND SAND.
2. NATIVE TOP SOIL WILL CONSIST OF SEEDED, SANDY LOAM STOCKPILED FROM CONTAINMENT CELL GRADING / EXCAVATING ACTIVITIES.
3. STEEL MESH TO IMPEDE BURROWING ANIMALS AT 18" FROM SURFACE (27)
4. NATIVE SOIL BLEND
5. THE 10" SAND /PEA GRAVEL LIFT IS THE CAPILLARY BARRIER.
6. 3 FEET OF CABLE AND TUBING WILL BE COILED IN ROAD BOX.
7. EXPANSIVE SOIL/BENTONITE MIXTURE
8. THERMISTOR WIRES
9. 1/4 " DIA. TEFLON TUBES FOR SOIL GAS SAMPLING. (20)
10. TDR COAXIAL CABLES (17)
11. COLOR-CODED IDENTITY TAG ON EACH WIRE, TUBE, AND CABLE. TDR CABLE WITH RADIO SHACK # 278-104 BNC CONNECTOR AND PLASTIC PROTECTIVE CAP, TEFLON TUBE WITH FISCHER SCIENTIFIC 1/4 " - 28 FLAT-BOTTOMED PLUG # 05-700-111. ELECTRICAL TAPE PLACED OVER ENDS OF THERMISTOR WIRES.
12. SILICONE SEAL INSIDE PVC CONDUIT
13. HDPE PIPE SLEEVES BANDED TO CONDUIT AND FIELD WELDED AS PER MANUFACTURES RECOMMENDATIONS (15)

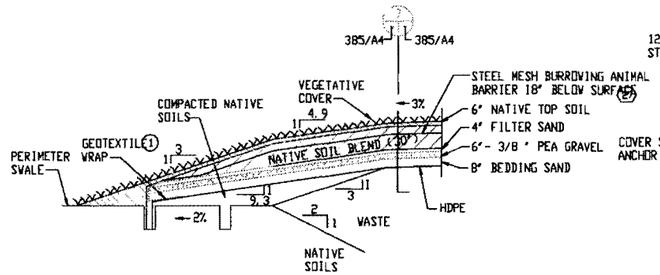

SCALE: 4 — EAST/WEST COVER SYSTEM SECTION — NOT TO SCALE — 385/A4 385/A4

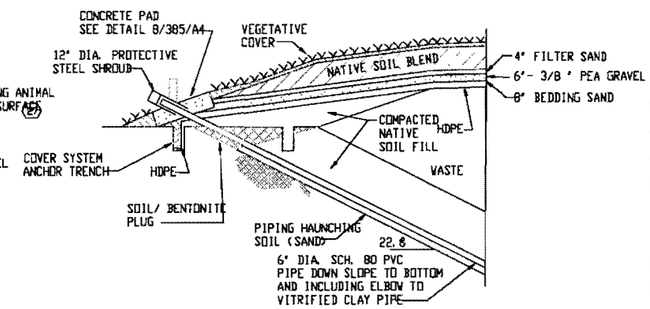

SCALE: 5 — VZMS ACCESS TUBE NORTH SECTION — NOT TO SCALE — 385/A4 385/A4

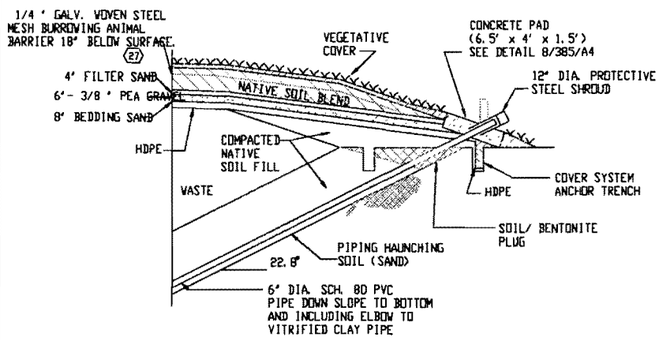

SCALE: 6 — VZMS ACCESS TUBE SOUTH SECTION — NOT TO SCALE — 385/A4 385/A4

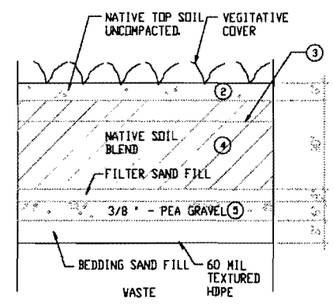

SCALE: 7 — TYPICAL COVER SECTION — NTS — 385/A4 385/A4

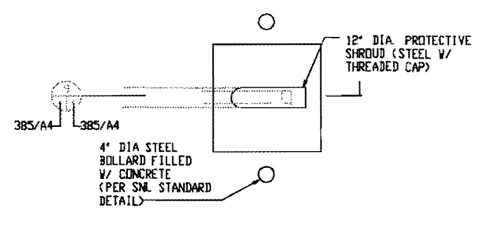

SCALE: 8 — PLAN VIEW-ACCESS TUBE DAYLIGHT — NOT TO SCALE — 385/A4 385/A4

NOTE:
NORTH END ACCESS TUBES WILL BE POSITIONED 22.6 OFF HORIZONTAL AND SOUTH END ACCESS TUBES 23.8 OFF HORIZONTAL.

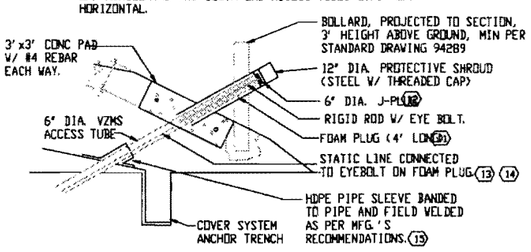

SCALE: 9 — SECTION - ACCESS TUBE DAYLIGHT — NOT TO SCALE — 385/A4 385/A4

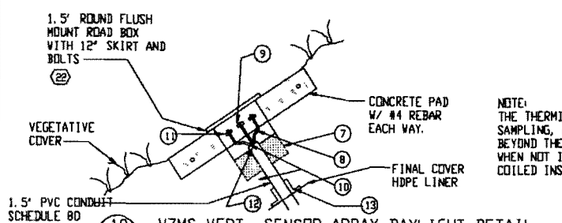

SCALE: 10 — VZMS-VERT. SENSOR ARRAY DAYLIGHT DETAIL — NOT TO SCALE — 385/A5 385/A4

NOTE:
THE THERMISTOR WIRES, TEFLON™ TUBES FOR SOIL GAS SAMPLING, AND TDR COAXIAL CABLES WILL EXTEND FIVE FEET BEYOND THE END OF THE SCHEDULE 80 1.5" PVC CONDUIT. WHEN NOT IN USE THE WIRES, TUBES, AND CABLES WILL BE COILED INSIDE THE ROAD BOX.

REV	DATE	DESCRIPTION	DWN	CKD	APP

U. S. DEPARTMENT OF ENERGY
MANAGEMENT SUPPORT DIVISION
KIRTLAND AIR FORCE BASE EAST — ALBUQUERQUE, NEW MEXICO

SANDIA NATIONAL LABORATORIES PLANT ENGINEERING
ALBUQUERQUE, NEW MEXICO — LIVERMORE, CALIFORNIA — TONOPAH, NEVADA

CONTAINMENT CELL CAP DETAILS

HAZARDOUS WASTE CORRECTIVE ACTION MANAGEMENT UNIT

CIVIL

IT CORPORATION

PROJECT NO.	6463-CN4666
DRAWN BY	DEH
CHECKED BY	BW
APPROVED BY	
DATE	7/29/96
SIZE	D+
DRAWING NO. /SHEET	104385/A4
SEQ.	13

CAD DRAWING
COMPUTER SYSTEMS DEPT. 7501
SITE UTILITIES DEPT. 7509
FILE NAME: 765491_CAMU
REFERENCE FILES:

A-3

Volume III, Part5, CAMU, Appendix E Fig 4-4 301462, 2490200D

Attachment A

Figure 3-1
Figure to be inserted in Volume III, section labeled "CAMU"

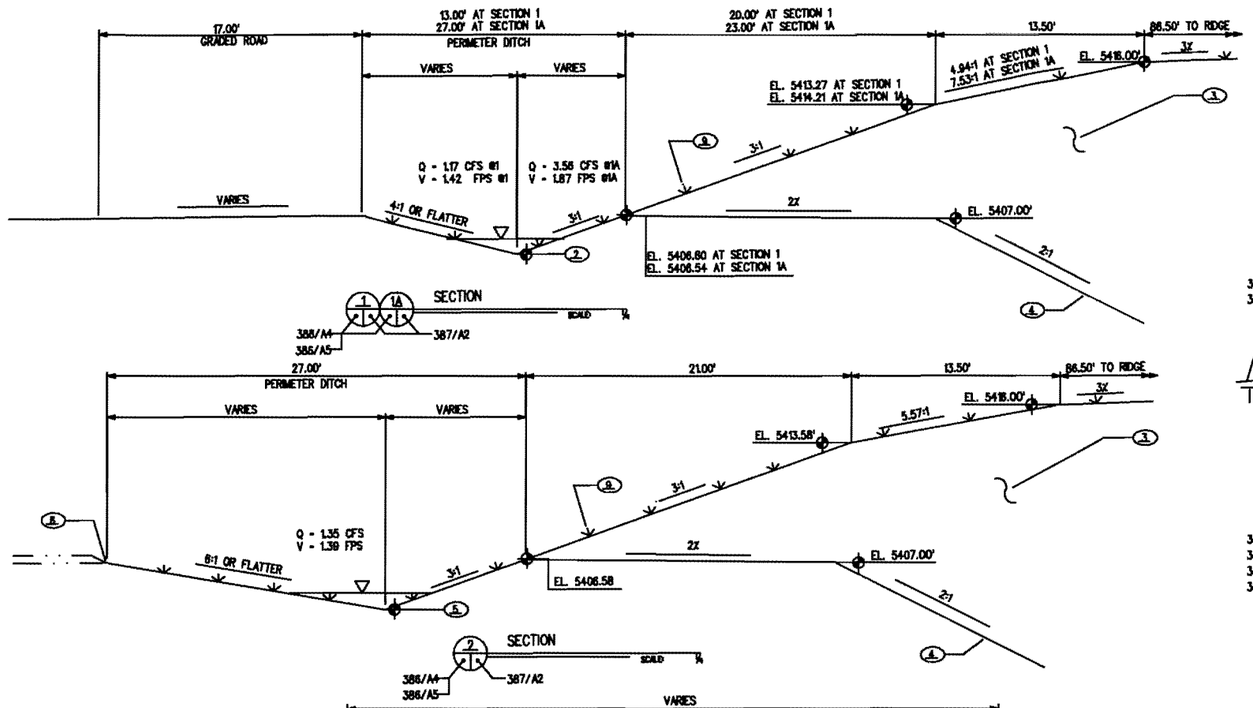

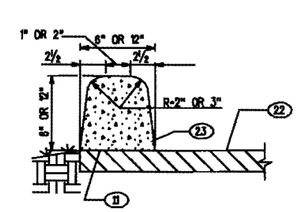

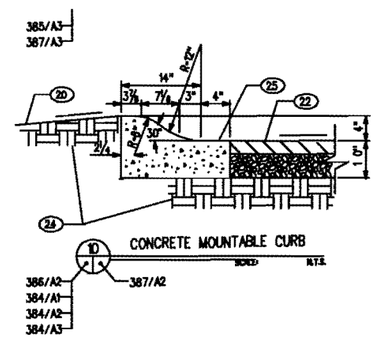

KEYED NOTES

1. NOT USED.
2. EXISTING GRADE.
3. DISPOSAL CELL CAP, SEE 104385/A4 AND 104386/A5.
4. DISPOSAL CELL FLOOR, SEE 104385/A2 AND 104386/A4.
5. DITCH ELEVATION, SEE PLAN 104386/A2.
6. SHOULDER OF EXISTING ROAD.
7. CAULK.
8. VADOSE ZONE MONITORS, SEE 104384/A4
9. SEED SLOPES AT 4:1 AND STEEPER IN ACCORDANCE WITH SPECIAL SPECIFICATION.
10. 2" ASPHALT SURFACE COURSE, 1800 POUND STABILITY, PLACED IN 1 LIFT.
11. TACK COAT AS PER SPECIFICATIONS.
12. 4" ASPHALT SURFACE COURSE, 1800 POUND STABILITY, PLACED IN 2-2" LIFTS. BOTTOM LIFT SHALL BE GRADATION TYPE B.
13. 12" SUBGRADE PREPARATION COMPACTED TO A MINIMUM 95% COMPACTION.
14. WEST SIDE OF ROADWAY OR WEST SIDE OF SITE.
15. 6" AGGREGATE BASE COURSE.
16. PAVE TIGHT AGAINST WALL.
17. DELETED.
18. CONCRETE CUTOFF WALL WITH 4-#4 HORIZONTAL AND #4 VERTICAL AT 18" O.C.
19. GALVANIZED COUNTER FLASHING, SECURE TO WALL WITH HILTI POWER DRIVEN FASTENER #MX22512 AT 24" O.C.
20. GRADE AWAY FROM CURB.
21. CROWN.
22. PAVING.
23. ASPHALT CONCRETE CURB.
24. COMPACTED SUBGRADE.
25. CONCRETE MOUNTABLE CURB AND GUTTER.
26. DELETED.

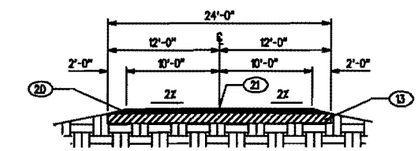

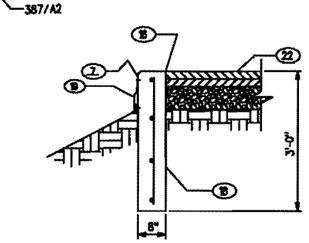

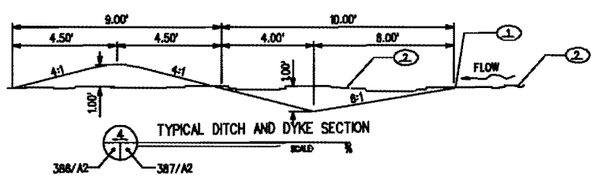

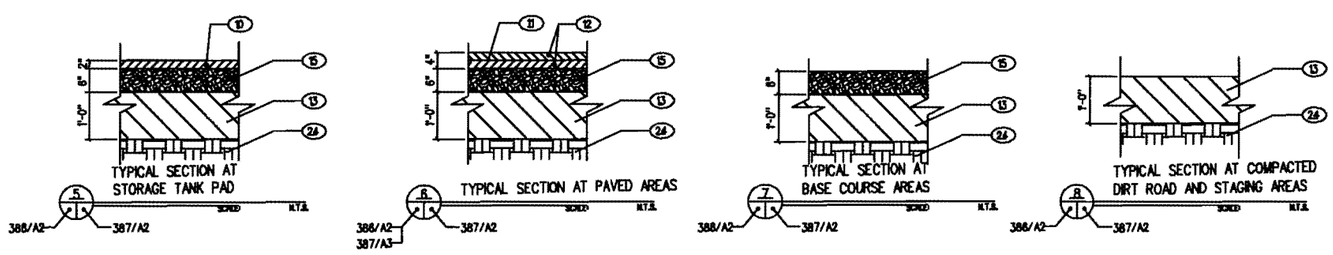

P.O. OR W.O. PROJECT NO.	REV	DATE	DESCRIPTION	DWN	CKD	APP

U.S. DEPARTMENT OF ENERGY
MANAGEMENT SUPPORT DIVISION
KIRTLAND AIR FORCE BASE EAST ALBUQUERQUE, NEW MEXICO

SANDIA NATIONAL LABORATORIES PLANT ENGINEERING
ALBUQUERQUE, NEW MEXICO, LIVERMORE, CALIFORNIA; TONOPAH, NEVADA

SECTIONS AND DETAILS

HAZARDOUS WASTE CORRECTIVE ACTION MANAGMENT UNIT

P.O. OR W.O.	CH4666
PROJECT NO.	780847
DRAWN BY	DEH
DESIGNED BY	
APPROVED BY	SC
DATE	7/29/1996

CIVIL CAMU

IT CORPORATION

SIZE D+ DRAWING NO./SHEET 104385/A02 SEQ. 23

CAD DRAWING
COMPUTER SYSTEMS DEPT. 7801
SITE UTILITIES DEPT. 7808
FILE NAME: sg3001camu.dwg
REFERENCE FILES:

Volume III.Part5.CAMU. Fig3-1

Attachment B

Figures to be inserted in Volume III, section labeled Appendix A under "Temporary Unit (Soil Stabilization Unit)"

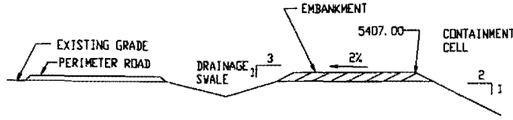

1 SECTION - WEST
SCALE: NOT TO SCALE
384/A4 385/A2

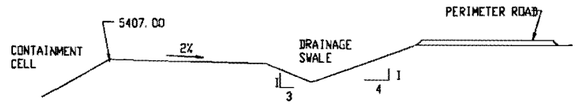

2 SECTION - EAST
SCALE: NOT TO SCALE
384/A4 385/A2

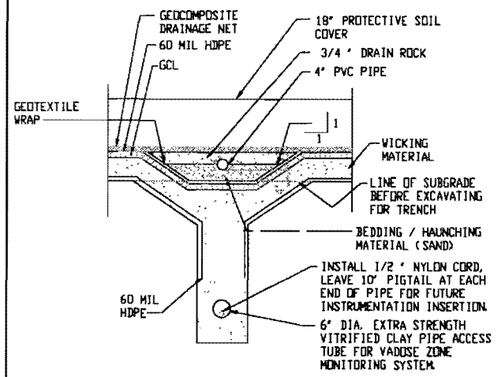

3 4" PVC PIPE TRENCH - BOTTOM
SCALE: NOT TO SCALE
384/A4 385/A2

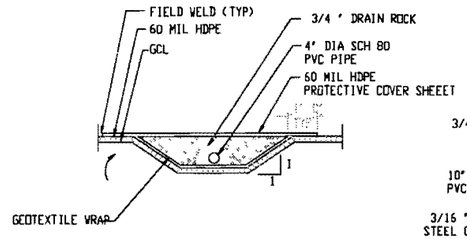

4 4" PVC PIPE TRENCH-SOUTH SLOPE
SCALE: NOT TO SCALE
384/A4 385/A2

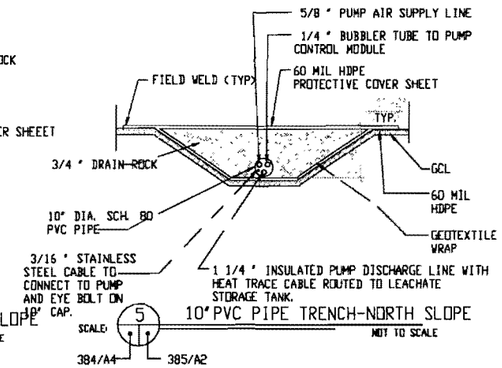

5 10"PVC PIPE TRENCH-NORTH SLOPE
SCALE: NOT TO SCALE
384/A4 385/A2

GENERAL NOTES

SEE MECHANICAL EQUIPMENT SCHEDULE, SHEET 385/A6.

ALL WORK ON THIS SHEET IS PHSE 2

KEYED NOTES

1. BEDDING / HAUNCHING MATERIAL PLACED UNDER 4" PIPE IN BOTTOM LCRS TRENCH OVER 1% SLOPE TO EDGE OF SUMP. BEDDING/HAUNCHING MATERIAL TRANSITIONS AT 5% SLOPE FROM 4" TO 0" OVER FINAL 5' OF LCRS TRENCH PRIOR TO ENTERING SUMP.
2. UPPER 60 MIL HDPE PLACED IN SUMP AREA ONLY WITH 5' SIDEWALL OVERLAP ON NORTH END OF SUMP AND 3' OVERLAP IN ALL OTHER AREAS - FIELD WELDED TO LOWER 60 MIL HDPE LINER.

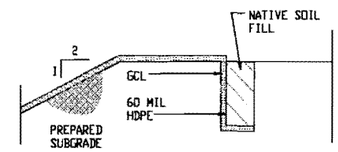

8 ANCHOR TRENCH SECTION
SCALE: NOT TO SCALE
384/A4 385/A2

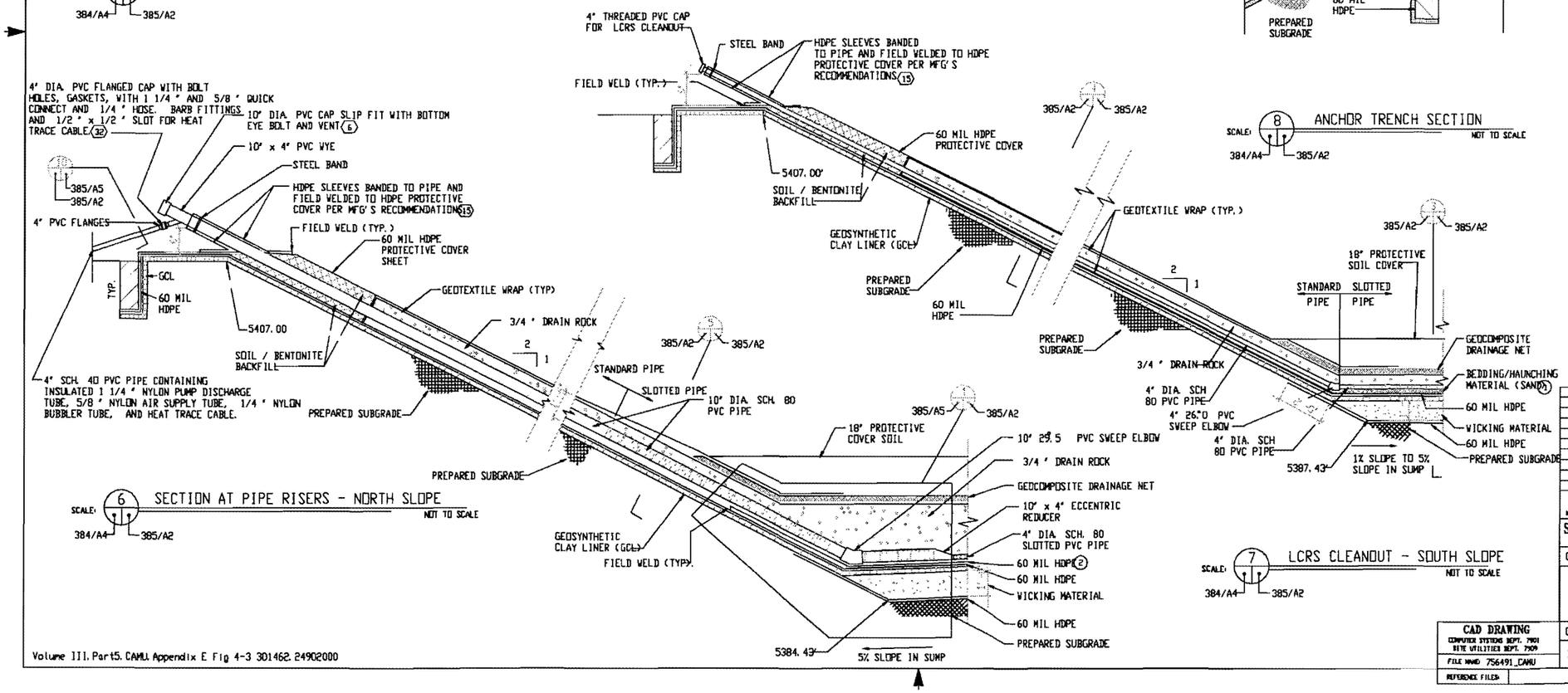

6 SECTION AT PIPE RISERS - NORTH SLOPE
SCALE: NOT TO SCALE
384/A4 385/A2

7 LCRS CLEANOUT - SOUTH SLOPE
SCALE: NOT TO SCALE
384/A4 385/A2

P.G. OR W.O. PROJECT NO.	REV	DATE	DESCRIPTION	DWN	CKD	APP

U. S. DEPARTMENT OF ENERGY
MANAGEMENT SUPPORT DIVISION
KIRTLAND AIR FORCE BASE EAST ALBUQUERQUE, NEW MEXICO

SANDIA NATIONAL LABORATORIES PLANT ENGINEERING
ALBUQUERQUE, NEW MEXICO; LIVERMORE, CALIFORNIA; TONOPAH, NEVADA

CONTAINMENT CELL DETAILS

HAZARDOUS WASTE CORRECTIVE ACTION MANAGEMENT UNIT

P.G. OR W.O.	
PROJECT NO.	6463-CN4666
DRAWN BY	DEH
CHECKED BY	BW
APPROVED BY	
DATE	7/29/96
SEQ.	11

CIVIL

IT CORPORATION

SIZE D+ DRAWING NO./SHEET 104385/A2

CAD DRAWING
COMPUTER SYSTEMS DEPT. 7901
SITE UTILITIES DEPT. 7509
FILE NAME: 756491_CAMU
REFERENCE FILES:

Volume III, Part5, CAMU Appendix E Fig 4-3 301462.24902000

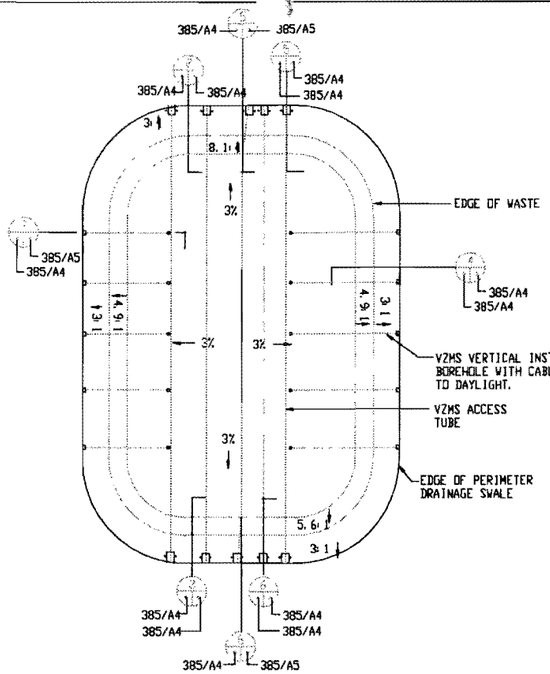

1 FINAL COVER PLAN
SCALE: 1" = 50'-0"
385/A4 — 385/A4

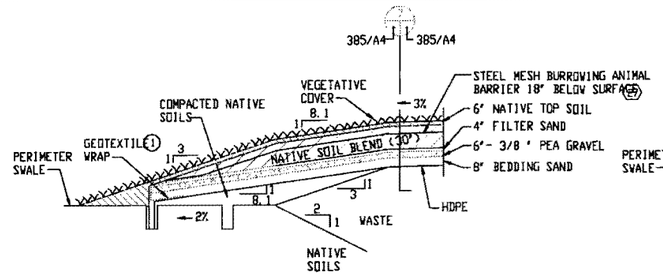

2 NORTH COVER SYSTEM SECTION
SCALE: NOT TO SCALE
385/A4 — 385/A4

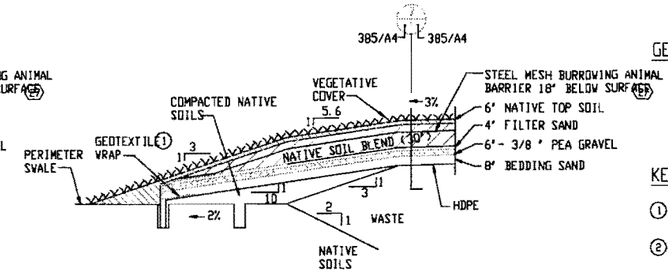

3 SOUTH COVER SYSTEM SECTION
SCALE: NOT TO SCALE
385/A4 — 385/A4

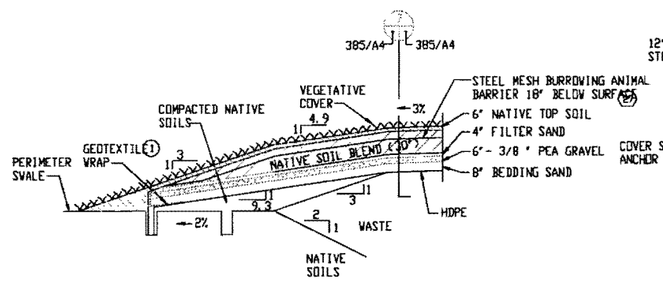

4 EAST/WEST COVER SYSTEM SECTION
SCALE: NOT TO SCALE
385/A4 — 385/A4

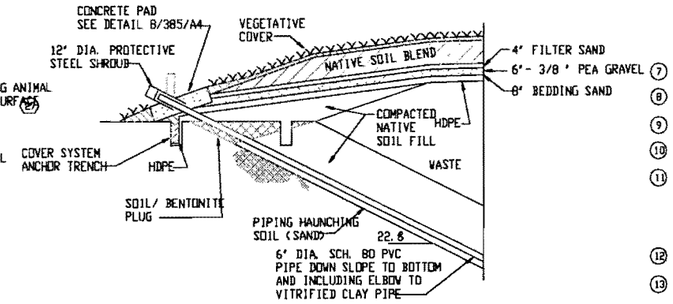

5 VZMS ACCESS TUBE NORTH SECTION
SCALE: NOT TO SCALE
385/A4 — 385/A4

GENERAL NOTES

⬡ SEE MECHANICAL EQUIPMENT SCHEDULE, SHEET 385/A6.

KEYED NOTES

1. GEOTEXTILE WRAP WILL CONSIST OF 20' WIDE ROLL WRAPPED AROUND SAND.
2. NATIVE TOP SOIL WILL CONSIST OF SEEDED, SANDY LOAM STOCKPILED FROM CONTAINMENT CELL GRADING / EXCAVATING ACTIVITIES.
3. STEEL MESH TO IMPEDE BURROWING ANIMALS AT 18" FROM SURFACE (27)
4. NATIVE SOIL BLEND
5. THE 10" SAND /PEA GRAVEL LIFT IS THE CAPILLARY BARRIER.
6. 3 FEET OF CABLE AND TUBING WILL BE COILED IN ROAD BOX.
7. EXPANSIVE SOIL/BENTONITE MIXTURE
8. THERMISTOR WIRES
9. 1/4 " DIA. TEFLON™ TUBES FOR SOIL GAS SAMPLING. (20)
10. TDR COAXIAL CABLES (17)
11. COLOR-CODED IDENTITY TAG ON EACH WIRE, TUBE, AND CABLE. TDR CABLE WITH RADIO SHACK # 278-104 BNC CONNECTOR AND PLASTIC PROTECTIVE CAP, TEFLON TUBE WITH FISCHER SCIENTIFIC 1/4 " - 28 FLAT-BOTTOMED PLUG # 05-70D-111. ELECTRICAL TAPE PLACED OVER ENDS OF THERMISTOR W. (18)
12. SILICONE SEAL INSIDE PVC CONDUIT
13. HDPE PIPE SLEEVES BANDED TO CONDUIT AND FIELD WELDED AS PER MANUFACTURES RECOMMENDATIONS (15)

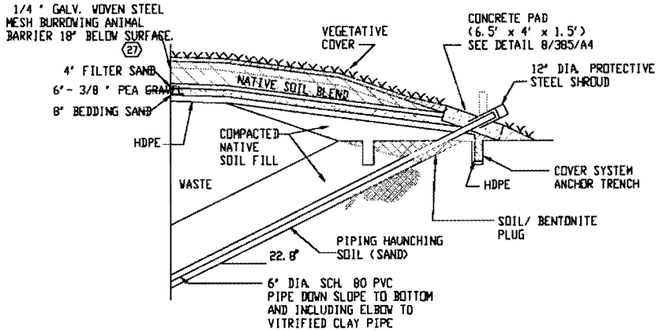

6 VZMS ACCESS TUBE SOUTH SECTION
SCALE: NOT TO SCALE
385/A4 — 385/A4

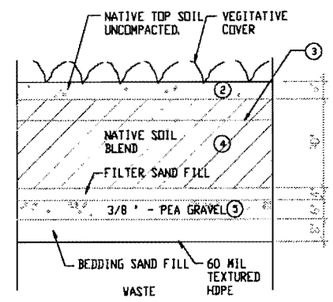

7 TYPICAL COVER SECTION
SCALE: NTS
385/A4 — 385/A4

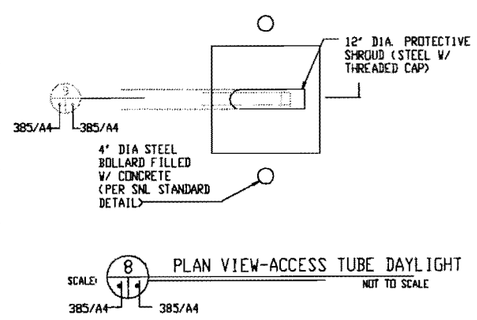

8 PLAN VIEW-ACCESS TUBE DAYLIGHT
SCALE: NOT TO SCALE
385/A4 — 385/A4

NOTE:
NORTH END ACCESS TUBES WILL BE POSITIONED 22.6 OFF HORIZONTAL AND SOUTH END ACCESS TUBES 23.8 OFF HORIZONTAL.

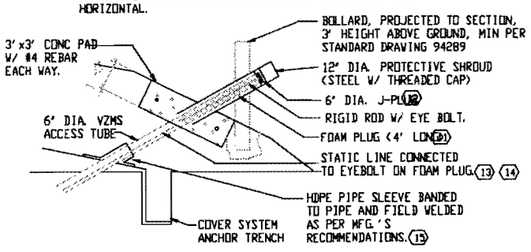

9 SECTION - ACCESS TUBE DAYLIGHT
SCALE: NOT TO SCALE
385/A4 — 385/A4

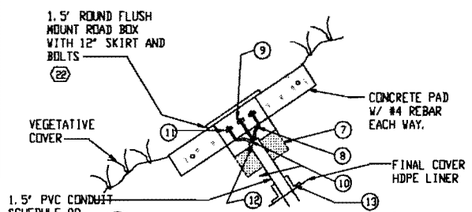

10 VZMS-VERT. SENSOR ARRAY DAYLIGHT DETAIL
SCALE: NOT TO SCALE
385/A5 — 385/A4

NOTE:
THE THERMISTOR WIRES, TEFLON™ TUBES FOR SOIL GAS SAMPLING, AND TDR COAXIAL CABLES WILL EXTEND FIVE FEET BEYOND THE END OF THE SCHEDULE 80 1.5" PVC CONDUIT. WHEN NOT IN USE THE WIRES, TUBES, AND CABLES WILL BE COILED INSIDE THE ROAD BOX.

P.O. OR W.O. / PROJECT NO.	REV	DATE	DESCRIPTION	DWN	CKD	APP

U. S. DEPARTMENT OF ENERGY
MANAGEMENT SUPPORT DIVISION
KIRTLAND AIR FORCE BASE EAST — ALBUQUERQUE, NEW MEXICO

SANDIA NATIONAL LABORATORIES PLANT ENGINEERING
ALBUQUERQUE, NEW MEXICO — LIVERMORE, CALIFORNIA — TONOPAH, NEVADA

CONTAINMENT CELL CAP DETAILS

HAZARDOUS WASTE CORRECTIVE ACTION MANAGEMENT UNIT

CIVIL

IT CORPORATION

P.O. OR W.O.	
PROJECT NO.	6463-CN4666
DRAWN BY	DEH
CHECKED BY	BW
APPROVED BY	
DATE	7/29/96
SIZE	D+
DRAWING NO. / SHEET	104385/A4
SCH.	13

CAD DRAWING
COMPUTER SYSTEMS DEPT. 7501
SITE UTILITIES DEPT. 7509
FILE NAME: 765491_CAMU
REFERENCE FILES: