ENRON
OPERATIONS CORP.

P. O. Box 1188 Houston, Texas 77251-1188 (713) 853-6161

May 10, 1995

(TWP) 95

Ms. Barbara Hoditschek
New Mexico Environment Department
Hazardous & Radioactive Materials Bureau
525 Camino de Los Marquez
Santa Fe, NM 87502

RE: Transmittal of Additional Information

Dear Ms. Hoditschek,

Enclosed are Submittals 1-4 as requested by your letter dated April 28, 1995. These submittals generally comply with the specific requests for information with only a few minor exceptions which are described below.

1. The listing of hazardous constituents for waste characterization includes all constituents found in the petroleum refining category of "List 4" of the RFI Guidance with the exception of three volatile organic compounds (chloracetaldehyde, chloral, and ethanol). These three compounds cannot be analyzed by EPA Method 8240. Based on process knowledge, none of these three compounds can reasonably be considered potential contaminants of concern. Therefore, TPC has excluded these compounds from the listing of hazardous constituents for waste characterization.

2. The project schedule has been prepared as requested by the NMED with no known exceptions.

3. Tables 3-2 through 3-5 have been modified to include reference concentrations rather than "action levels" since action levels will not be developed until after waste characterization. This exception to the original request for "applicable action levels" has been discussed with Teri Davis and conditionally found acceptable pending a final review by the NMED.

4. A standard operating procedure (SOP) and QA/QC information for mobile laboratory operations was obtained from Analytical Technologies Inc. (ATI) of Phoenix, Arizona. TPC has utilized ATI's mobile lab services in the past and would likely utilize their services during soil assessment activities at the Roswell Station. However, TPC reserves the right to evaluate other mobile laboratory service providers for use at the Roswell Station. In the event another mobile laboratory service provider is selected, TPC would obtain the necessary SOP and QA/QC information and provide this to the NMED prior to field activities.

Also included with this submittal is a corrected Figure 2-1 for inclusion into the closure plan.

If you have any questions or comments regarding this information, please contact me at (713) 646-7644 or George Robinson at (713) 646-7327.

Sincerely,

Bill Kendrick

Bill Kendrick
Projects Group Manager
EOC Environmental Affairs

gcr/BK/attachments

xc: Roger Anderson NMOCD Santa Fe, NM

NATIONAL ENVIRONMENTAL TESTING, INC.

Dallas Division
1548 Valwood Parkway
Suite 118
Carrollton, TX 75006
Tel: (214) 406-8100
Fax: (214) 484-2969

ANALYTICAL AND QUALITY CONTROL REPORT

Larry Campbell
TRANSWESTERN PIPELINE
6381 N. Main St.
Roswell, NM 88202

06/19/1995

NET Job Number: 95.03823

Enclosed is the Analytical and Quality Control report for the following samples submitted to the Dallas Division of NET, Inc. for analysis. Reproduction of this analytical report is permitted only in its entirety.

Sample Number	Sample Description	Date Taken	Date Received
264681	RECOVERY TANK REMEDIATION ROSWE	06/12/1995	06/13/1995

National Environmental Testing, Inc. certifies that the analytical results contained herein apply only to the specific samples analyzed.

Holding Times: All holding times were within method criteria.

Method Blanks: All method blanks were within quality control criteria.

Instrument calibration: All calibrations were within method quality control criteria.

Analysis Comments: No Unusual Comments

Gregory K. Horton
Project Coordinator

ANALYTICAL REPORT

Larry Campbell
TRANSWESTERN PIPELINE
6381 N. Main St.
Roswell, NM 88202

06/19/1995
Job No.: 95.03823

Project Name: ROSWELL STATION

Date Received: 06/13/1995

264681 RECOVERY TANK REMEDIATION ROSWELL
Taken: 06/12/1995 15:00

TCLP-Arsenic, ICP	0.35		mg/L
TCLP-Barium, ICP	1.1		mg/L
TCLP-Cadmium, ICP	<0.01		mg/L
TCLP-Chromium, ICP	<0.01		mg/L
TCLP-Lead, ICP	<0.03		mg/L
TCLP-Mercury, CVAA	<0.0002		mg/L
TCLP-Selenium, ICP	<0.04		mg/L
TCLP-Silver, ICP	<0.01		mg/L
Flash Point	104		F
ACID EXT.-8270 AQUEOUS			
Benzoic acid	<2,000		ug/kg
Benzyl alcohol	<500		ug/kg
4-Chloro-3-methylphenol	<500		ug/kg
2-Chlorophenol	<500		ug/kg
2,4-Dichlorophenol	<500		ug/kg
2,4-Dimethylphenol	<500		ug/kg
2,4-Dinitrophenol	<2,000		ug/kg
2-Methyl-4,6-dinitrophenol	<2,000		ug/kg
2-Methylphenol (o-Cresol)	<500		ug/kg
4-Methylphenol (p-Cresol)	<500		ug/kg
2-Nitrophenol	<500		ug/kg
4-Nitrophenol	<2,000		ug/kg
Pentachlorophenol	<2,000		ug/kg
Phenol	<500		ug/kg
2,4,5-Trichlorophenol	<500		ug/kg
2,4,6-Trichlorophenol	<500		ug/kg
SURR: 2-Fluorophenol	N/A	D	%
SURR: Phenol-d5	N/A	D	%
SURR: 2,4,6-Tribromophenol	N/A	D	%
BASE/NEUTRALS - 8270 AQUEOUS			
Acenaphthene	<500		ug/kg
Acenaphthylene	<500		ug/kg
Aniline	<500		ug/kg
Anthracene	<500		ug/kg
Benzidine	<1,000		ug/kg
Benzo(a)anthracene	<500		ug/kg
Benzo(b)fluoranthene	<500		ug/kg
Benzo(k)fluoranthene	<500		ug/kg
Benzo(g,h,i)perylene	<500		ug/kg
Benzo(a)pyrene	<500		ug/kg

D - Surrogate diluted out.

ANALYTICAL REPORT

Larry Campbell
TRANSWESTERN PIPELINE
6381 N. Main St.
Roswell, NM 88202

06/19/1995
Job No.: 95.03823

Project Name: ROSWELL STATION

Date Received: 06/13/1995

264681 RECOVERY TANK REMEDIATION ROSWELL
Taken: 06/12/1995 15:00

Benzyl butyl phthalate	<500	ug/kg
Bis(2-chloroethoxy)methane	<500	ug/kg
Bis(2-chloroethyl)ether	<500	ug/kg
Bis(2-chloroisopropyl)ether	<500	ug/kg
Bis(2-ethylhexyl)phthalate	<500	ug/kg
4-Bromophenyl phenyl ether	<500	ug/kg
4-Chloroaniline	<500	ug/kg
2-Chloronaphthalene	<500	ug/kg
4-Chlorophenyl phenyl ether	<500	ug/kg
Chrysene	<500	ug/kg
Dibenzo(a,h)anthracene	<500	ug/kg
Dibenzofuran	<500	ug/kg
Di-n-butyl phthalate	<500	ug/kg
1,2-Dichlorobenzene	<500	ug/kg
1,3-Dichlorobenzene	<500	ug/kg
1,4-Dichlorobenzene	<500	ug/kg
3,3'-Dichlorobenzidine	<1,000	ug/kg
Diethyl phthalate	<500	ug/kg
Dimethyl phthalate	<500	ug/kg
2,4-Dinitrotoluene	<500	ug/kg
2,6-Dinitrotoluene	<500	ug/kg
Di-n-octyl phthalate	<500	ug/kg
Fluoranthene	<500	ug/kg
Fluorene	<500	ug/kg
Hexachlorobenzene	<500	ug/kg
Hexachlorobutadiene	<500	ug/kg
Hexachlorocyclopentadiene	<500	ug/kg
Hexachloroethane	<500	ug/kg
Indeno(1,2,3-cd)pyrene	<500	ug/kg
Isophorone	<500	ug/kg
2-Methylnaphthalene	<500	ug/kg
Naphthalene	<500	ug/kg
2-Nitroaniline	<2,000	ug/kg
3-Nitroaniline	<2,000	ug/kg
4-Nitroaniline	<2,000	ug/kg
Nitrobenzene	<500	ug/kg
N-Nitrosodimethylamine	<500	ug/kg
N-Nitrosodi-n-propylamine	<500	ug/kg
N-Nitrosodiphenylamine	<500	ug/kg
Phenanthrene	<500	ug/kg

ANALYTICAL REPORT

Larry Campbell
TRANSWESTERN PIPELINE
6381 N. Main St.
Roswell, NM 88202

06/19/1995
Job No.: 95.03823

Project Name: ROSWELL STATION

Date Received: 06/13/1995

264681 RECOVERY TANK REMEDIATION ROSWELL
Taken: 06/12/1995 15:00

Pyrene	<500		ug/kg
1,2,4-Trichlorobenzene	<500		ug/kg
SURR: 2-Fluorobiphenyl	N/A	D	%
SURR: Nitrobenzene-d5	N/A	D	%
SURR: Terphenyl-d14	N/A	D	%
VOA 8240 NONAQ.			
Acetone	<100		ug/kg
Benzene	9800		ug/kg
Bromodichloromethane	<50		ug/kg
Bromoform	<50		ug/kg
Bromomethane	<100		ug/kg
2-Butanone (MEK)	<200		ug/kg
Carbon disulfide	<50		ug/kg
Carbon tetrachloride	<50		ug/kg
Chlorobenzene	<50		ug/kg
Chloroethane	<100		ug/kg
2-Chloroethylvinyl ether	<200		ug/kg
Chloroform	<50		ug/kg
Chloromethane	<100		ug/kg
Dibromochloromethane	<50		ug/kg
1,1-Dichloroethane	<50		ug/kg
1,2-Dichloroethane	<50		ug/kg
1,1-Dichloroethene	<50		ug/kg
trans-1,2-Dichloroethene	<50		ug/kg
1,2-Dichloropropane	<50		ug/kg
cis-1,3-Dichloropropene	<50		ug/kg
trans-1,3-Dichloropropene	<50		ug/kg
Ethyl benzene	170000		ug/kg
2-Hexanone	<200		ug/kg
Methylene chloride	<50		ug/kg
4-Methyl-2-pentanone (MIBK)	<50		ug/kg
Styrene	<50		ug/kg
1,1,2,2-Tetrachloroethane	<50		ug/kg
Tetrachloroethene	<50		ug/kg
Toluene	30000		ug/kg
1,1,1-Trichloroethane	<50		ug/kg
1,1,2-Trichloroethane	<50		ug/kg
Trichloroethene	<50		ug/kg
Vinyl acetate	<50		ug/kg
Vinyl chloride	<100		ug/kg

D - Surrogate diluted out.

ANALYTICAL REPORT

Larry Campbell
TRANSWESTERN PIPELINE
6381 N. Main St.
Roswell, NM 88202

06/19/1995
Job No.: 95.03823

Project Name: ROSWELL STATION

Date Received: 06/13/1995

264681 RECOVERY TANK REMEDIATION ROSWELL
Taken: 06/12/1995 15:00

Xylenes, Total	164000	ug/kg
SURR: 1,2-Dichloroethane-d4	99	% Rec
SURR: Toluene-d8	101	% Rec
SURR: 4-Bromofluorobenzene	100	% Rec

CORELAB

CORE LABORATORIES

LABORATORY TESTS RESULTS

Report Date: 09/20/95

JOB NUMBER: 954165 CUSTOMER: Daniel B. Stevens & Associates ATTN: Jeff Forbes

Customer Sample ID.: PIT 1, SE BORING
Sample Date.....: 08/18/95
Sample Time.....: 10:00
Sample Matrix.....: Soil

Laboratory Sample ID.: 954165-10
Date Received.....: 08/22/95
Time Received.....: 10:15

TEST DESCRIPTION	TEST MATRIX	FINAL RESULT	DETECTION LIMIT	UNITS OF MEASURE	TEST METHOD	DATE ANALYZED	TECHNICIAN
Sulfide	Solid	940	50	mg/Kg	SW-846 9030	09/05/95 0800	* cc
Acid Digestion: Solids		completed	0	Not Applicable	SW-846 3050	08/30/95 1000	lmt
Mercury (Hg)	Solid	1.36	0.10	mg/Kg	SW-846 7471	09/01/95 1132	lmt
Aluminum (Al)	Solid	1690	5	mg/Kg	SW-846 6010	09/06/95 2127	gef
Antimony (Sb)	Solid	<10	10	mg/Kg	SW-846 6010	09/06/95 2127	gef
Arsenic (As)	Solid	17	5	mg/Kg	SW-846 6010	09/06/95 2127	gef
Barium (Ba)	Solid	171	1	mg/Kg	SW-846 6010	09/06/95 2127	gef
Beryllium (Be)	Solid	<0.5	0.5	mg/Kg	SW-846 6010	09/06/95 2127	gef
Cadmium (Cd)	Solid	<0.5	0.5	mg/Kg	SW-846 6010	09/06/95 2127	gef
Chromium (Cr)	Solid	9	1	mg/Kg	SW-846 6010	09/06/95 2127	gef
Cobalt (Co)	Solid	<3	3	mg/Kg	SW-846 6010	09/06/95 2127	gef
Copper (Cu)	Solid	337	1	mg/Kg	SW-846 6010	09/06/95 2127	gef
Lead (Pb)	Solid	11	5	mg/Kg	SW-846 6010	09/06/95 2127	gef
Nickel (Ni)	Solid	5	4	mg/Kg	SW-846 6010	09/06/95 2127	gef
Selenium (Se)	Solid	<10	10	mg/Kg	SW-846 6010	09/06/95 2127	gef
Silver (Ag)	Solid	<1	1	mg/Kg	SW-846 6010	09/06/95 2127	gef

The analyses, opinions or interpretations contained in this report are based upon observations and material supplied by the client for whose exclusive and confidential use this report has been made. The interpretations or opinions expressed represent the best judgment of Core Laboratories. Core Laboratories, however, assumes no responsibility and makes no warranty or representations, express or implied, as to the productivity, proper operations, or profitableness of any oil, gas, coal or other mineral, property, well or sand in connection with which such report is used or relied upon for any reason whatsoever. This report shall not be reproduced except in its entirety, without the written approval of Core Laboratories.

1204
Rev. 3-81

TEXAS EASTERN TRANSMISSION CORPORATION AND SUBSIDIARIES

COMPLETION REPORT

E. E. No. _____
Prelim. Ref. No. 567-586
Docket/Proj. No. 82-110
Code No. 1-0

Transwestern Pipeline Company
Company Name

Gas Western - Approp. #10/23/81-04
Profit or Cost Center

AFE No. 23018
Company No. 09

[X] Property Addition	[ ] Preliminary Investigation	[ ] Research & Development	[ ] Other Work	[ ] Property Retirement	[ ] Other (Specify)

TITLE Install 500 Bbl. Pipeline Waste Tank & Related Equipment

LOCATION Compressor Station No. 9 - Roswell, N. M. 30-1-7119 District III

Date Started 11-4-82 Date in Service 11-11-83 Date Completed 11-11-83

Related AFE No. _____

Drawings Attached TO BE SENT AT A LATER DATE (a)

Other Ref. Swg's (Not Attached) _____

MATERIAL OR RECEIVING REPORTS ISSUED

See TW-112

ORIGINAL MAILED
FEB - 2 1984
TO HOUSTON OFFICE

REMARKS:

ENGINEERING SERVICES		OPERATIONS	
Prepared by:	Date:	Prepared by: B.F.S. B. Frank Smith	Date: 1-25-84
Verified by:	Date:	Verified by: Francis M. Cox F.M.Cox	Date: 1-25-84
Manager Plant Records	Date:	Approved by: D. A. Thompson	Date: 2-2-84
Manager Materials Management:	Date:	Approved by:	Date:
General Manager Administration			

Attachment E

Texas Eastern Transmission Corporation and Subsidiaries

Preliminary Completion Report

E. E. No. _____
Prelim. Ref. No. 567-586
Docket/Proj. No. 82-110
Code No. _____

TRANSWESTERN PIPELINE COMPANY
Company Name

GAS WESTERN - APPROP. #10/23/81-04
Profit or Cost Center

AFE No. 23018
Company No. 09

XX Property Addition | ☐ Property Retirement

TITLE INSTALL 500 BBL. PIPELINE WASTE TANK & RELATED EQUIPMENT

LOCATION COMPRESSOR STATION NO. 9 - ROSWELL, N. M. 30-1-7119 DISTRICT III

Date Work Started _____

Date Work Completed (See Note A) 11-4-82

Date Work Placed in Service (See Note A) 11-11-83

NOTE A — Only one date is necessary, either date all work is completed or date work is placed in service, whichever is earlier. On "Property Retirement" date last part of line lifted or equipment dismantled will be date work completed.

NOTE—Briefly outline work necessary to complete. ESTIMATED FINAL COMPLETION DATE _____

REMARKS:

ORIGINAL MAILED
NOV 17 1983
TO HOUSTON OFFICE

Construction Foreman	Date:	
FRANCIS M. COX F.M. Cox	11-14-83	
Division Engineer	Date:	Division Manager / Date:
[illegible]	[illegible]	[illegible]

TEXAS EASTERN

OR SUBSIDIARIES

INVOICE IN TRIPLICATE TO:

TRANSWESTERN PIPELINE CO.
ACCOUNTING DEPARTMENT
P.O. BOX 2521
HOUSTON, TEXAS 77001

SHIP TO: 09-35-40
TRANSWESTERN PIPELINE COMPANY
HWY 285 NORTH
P. O. BOX 2018
ROSWELL, NEW MEXICO 88201
CARE OF: J.V. HENDRICKS
VENDOR: 451912
PATTERSON WELDING WORKS, INC.
1803 BRISCOE
ARTESIA, NEW MEXICO 88210

PURCHASE ORDER

NO. 09-048152 A

THIS PURCHASE ORDER NUMBER MUST BE SHOWN ON INVOICE, TAG, BOX, BILL OF LADING OR EXPRESS RECEIPT.

DATE OF ORDER	DATE REQUIRED
12-13-82	12-01-82

STATE SALES/USE TAX INSTRUCTIONS
[X] TAXABLE-STATE OF NM
[ ] TAX EXEMPT-SEE NOTE BELOW
[ ] SERVICES-NONTAXABLE

SHIP PREPAID AND [ ] ADD [X] ALLOW VIA VENDOR

F.O.B. DESTINATION

TERMS NET 30 DAYS

A.F.E. NO.	PROJECT DESCRIPTION	PROJECT NO.	JOB NO.	M&S ACCT.

PO. ITEM	BM ITEM	CATALOG NO.	QUAN. REC'D	QUANTITY	UNIT	DESCRIPTION	UNIT PRICE	SCHEDULED SHIPPING DATE	PRR
01			1	1	LT	LABOR & MATERIAL TO FABRICATE & INSTALL 1 EA. TANK, 500 BBL. MATERIALS TO INCLUDE: 12' DIAMETER X 25' HIGH, 1/4" THICK STEEL PLATE BOTTOM, 3/16" THICK STEEL SIDE, WALLS, & TOP. SHELL & DECK COMPLETE WITH STANDARD CONNECTIONS. ACCESSORIES INCLUDED ARE: 8" ROUND THIEF HATCH, 24" X 36" CLEAN OUT, OUTSIDE LADDER, 4" CONNECTIONS! 2" DRAIN LINE, 1" ROLLINE CONNECTIONS. THREE SECTIONS OF SIGHT GLASS (BEGINNING 4" FROM BOTTOM) CONF TO ED PATTERSON 12/13/82 OU 567-9-407-8-230-1-8-26-12-3-5-41	4350.00	12-20-82	

REQUISITION NO.	REQUESTED BY	BUYER	TYPIST
9-82-23018-5	F.H. COX	JDB	LS

TRANSPORTATION RECEIPT
VIA: ~~RED LAKE TRUCKING~~
NO. DATE

INTENDED USE OF MATERIAL
F/L WASTE STORAGE TANK F/STA #9 AFE 23018 OU SEE ABOVE

COPY No. 6
FIELD OFFICE FILE

ACCOUNT NUMBER ORG. UNIT	DIV.	GENERAL	MAJOR	MINOR	COST ELEM.	DEBIT	CREDIT

IF NO EXCEPTIONS SO INDICATE
NONE

AMOUNT PREPAID [ ]
COLLECT [ ]
IF COLLECT, HOW PAID

RECEIVED BY J. W. BRANCH/jvh DATE 1-14-83

APPROVALS DATE

1135
Rev. 12-81

TEXAS EASTERN CORPORATION AND SUBSIDIARIES

AUTHORIZATION FOR EXPENDITURES

E. E. No.
Preliminary Project No. 567-586
Docket/Project No. 82-110
Code No. 1-0

Transwestern Pipeline Company
Company Name

Gas Western - Approp. #10/23/81-04
Profit or Cost Center and Appropriation Reference No.

AFE No. 23018
Company No. 09

☒ Property Addition	☐ Other Work	☐ Research & Development	☐ Property Retirement	☐ Other (Specify)

TITLE
Install 500 Bbl. Pipeline Waste Tank & Related Equipment — Roswell Manager

LOCATION
Compressor Station No. 9 - Roswell, N. M. — 30-1-7119 — District III

DESCRIPTION
Install 500 bbl. pipeline waste tank with vent, flame arrestor & sight gauge on 6" concrete pad. Install ramp, curb & drain on existing concrete slab at pig receiver & install 10 bbl. fabricated collection tank with pump to transfer waste from collection tank to 500 bbl. tank. Fabricate & install pig trap muffle to separate waste from pig trap blowdown gas. Install pump at pig trap muffler to transfer waste from muffler to 500 bbl. waste storage tank. (See attached drawings).

FERC 1-12 - 4

In 1982 Budget: Yes

Related Prelim. No.: None
Related AFE Number: None

OPERATIONS A. F. E.

PURPOSE & NECESSITY

Provide safe handling for pipeline waste.

TW-112, 1203 & 1204 to be completed by: Frank Smith

Work to Begin 7 / 01 / 82
Work to be Completed 12 / 31 / 82

Work to Be Done by: ☒ Company Personnel ☒ Contractor

Material Costs . . . . . $ 23,925
Installation Costs . . . . . $ 17,300
AUTHORIZED AMOUNT. . . . . $ 41,225

A.S. No.99 *For Comptroller Division Use Only*
Status of Appropriation:
Total Appropriation . . . . . $ 12,360,000
Deduct: Previous AFE's . . . . . $ 5,567,549
This AFE. . . . . $ 41,225
Remaining Appropriation . . . . . $ 6,751,226

Prepared by: Francis m. Cay	Date: 5-3-82		Date:
Verified by: R. L. Porter	Date: 6/2/82	Tax Department Review by: R. W. Jones	Date: 7/14/82
Engineering Services Division Approval: NOT REQUIRED	Date:	Accounting Department Review by: Daniel Onate	Date: 7-19-82
Group or Division Authorization: Ed Robinson	Date: 7/14/82	Comptroller Division Approval: O. D. Thurman	Date: 7/20/82

1135
Rev. 12-81

TEXAS EASTERN CORPORATION AND SUBSIDIARIES

AUTHORIZATION FOR EXPENDITURES

E. E. No. _____
Preliminary Project No. 567-586
Docket/Project No. _____
Code No. _____

Transwestern Pipeline Company
Company Name

Gas Western - Approp. #10/23/81-04
Profit or Cost Center and Appropriation Reference No.

AFE No. 23018

Company No. 09

[X] Property Addition	[ ] Other Work	[ ] Research & Development	[ ] Property Retirement	[ ] Other (Specify)

TITLE
Install 500 Bbl. Pipeline Waste Tank & Related Equipment — Roswell Manager

LOCATION
Compressor Station No. 9 - Roswell, N. M. — District III

DESCRIPTION
Install 500 bbl. pipeline waste tank with vent, flame arrestor & sight gauge on 6" concrete pad. Install ramp, curb & drain on existing concrete slab at pig receiver & install 10 bbl. fabricated collection tank with pump to transfer waste from collection tank to 500 bbl. tank. Fabricate & install pig trap muffle to separate waste from pig trap blowdown gas. Install pump at pig trap muffler to transfer waste from muffler to 500 bbl. waste storage tank. (See attached drawings).

In 1982 Budget: No
Budgeted Amount: None
Related Prelim. No.: None
Related AFE Number: None

OPERATIONS A. F. E.

PURPOSE & NECESSITY

Provide safe handling for pipeline waste.

TW-112, 1203 & 1204 to be completed by: Frank Smith

Work to Begin 7 / 01 / 82
Work to be Completed 12 / 31 / 82

Work to Be Done by: [X] Company Personnel [X] Contractor

Material Costs . . . . . $ 23,925
Installation Costs . . . . . $ 17,300
AUTHORIZED AMOUNT. . . . . $ 41,225

For Comptroller Division Use Only
Status of Appropriation:
Total Appropriation . . . . . $
Deduct: Previous AFE's . . . . . $
This AFE . . . . . $
Remaining Appropriation . . . . . $

ORIGINAL MAILED
JUN - 3 1982
TO HOUSTON OFFICE

Prepared by: Francis M Cox	Date: 5-3-82		Date:
Verified by: R. R. Rodgers	Date: 6/2/82	Tax Department Review by:	Date:
Engineering Services Division Approval:	Date:	Accounting Department Review by:	Date:
Group or Division Authorization:	Date:	Comptroller Division Approval:	Date:

CORE LABORATORIES

LABORATORY TESTS RESULTS
Report Date: 09/20/95

JOB NUMBER: 954165 CUSTOMER: Daniel B. Stevens & Associates ATTN: Jeff Forbes

Customer Sample ID.: PIT 1, SE BORING
Sample Date.....: 08/18/95
Sample Time.....: 10:00
Sample Matrix.....: Soil

Laboratory Sample ID.: 954165-10
Date Received.....: 08/22/95
Time Received.....: 10:15

TEST DESCRIPTION	TEST MATRIX	FINAL RESULT	DETECTION LIMIT	UNITS OF MEASURE	TEST METHOD	DATE ANALYZED	TECHNICIAN
Thallium (Tl)	Solid	<10	10	mg/Kg	SW-846 6010	09/06/95 2127	gef
Tin (Sn)	Solid	6	5	mg/Kg	SW-846 6010	09/06/95 2127	gef
Vanadium (V)	Solid	10	5	mg/Kg	SW-846 6010	09/06/95 2127	gef
Zinc (Zn)	Solid	282	1	mg/Kg	SW-846 6010	09/06/95 2127	gef
Ultrasonic Extraction		completed		Not Applicable	SW-846 3550	08/30/95	mla
Ultrasonic Extraction		completed	0	Not Applicable	SW-846 3550	08/28/95 0000	mla
Total Recoverable Petroleum Hydrocarbons	Solid	26000	1000	mg/Kg	EPA 418.1	09/11/95 0915	jbd
Cyanide (Colorimetric, Manual)					SW-846 9010		kds
Cyanide (CN)	Solid	1.4	0.4	mg/Kg		08/28/95 1000	
PCB Analysis					SW-846 8080		lb
Aroclor 1016	Solid	ND	1700	ug/Kg		09/13/95 0137	
Aroclor 1221	Solid	ND	1700	ug/Kg		09/13/95 0137	
Aroclor 1232	Solid	ND	1700	ug/Kg		09/13/95 0137	
Aroclor 1242	Solid	ND	1700	ug/Kg		09/13/95 0137	
Aroclor 1248	Solid	ND	1700	ug/Kg		09/13/95 0137	
Aroclor 1254	Solid	ND	1700	ug/Kg		09/13/95 0137	
Aroclor 1260	Solid	ND	1700	ug/Kg		09/13/95 0137	
Aroclor 1262	Solid	ND	1700	ug/Kg		09/13/95 0137	
Aroclor 1268	Solid	ND	1700	ug/Kg		09/13/95 0137	
Semivolatile Organics (Client List)					SW-846 8270		mla
Acenaphthene	Solid	ND	3300	ug/Kg		09/11/95 1946	
Acenaphthylene	Solid	ND	3300	ug/Kg		09/11/95 1946	

The analyses, opinions or interpretations contained in this report are based upon observations and material supplied by the client for whose exclusive and confidential use this report has been made. The interpretations or opinions expressed represent the best judgment of Core Laboratories. Core Laboratories, however, assumes no responsibility and makes no warranty or representations, express or implied, as to the productivity, proper operations, or profitableness of any oil, gas, coal or other mineral, property, well or sand in connection with which such report is used or relied upon for any reason

CORE LABORATORIES

LABORATORY TESTS RESULTS

Report Date: 09/20/95

JOB NUMBER: 954165 CUSTOMER: Daniel B. Stevens & Associates ATTN: Jeff Forbes

Customer Sample ID.: PIT 1, SE BORING
Sample Date.....: 08/18/95
Sample Time.....: 10:00
Sample Matrix.....: Soil

Laboratory Sample ID.: 954165-10
Date Received.....: 08/22/95
Time Received.....: 10:15

TEST DESCRIPTION	TEST MATRIX	FINAL RESULT	DETECTION LIMIT	UNITS OF MEASURE	TEST METHOD	DATE ANALYZED	TECHNICIAN
Acetophenone	Solid	ND	3300	ug/Kg		09/11/95 1946	
4-Aminobiphenyl	Solid	ND	3300	ug/Kg		09/11/95 1946	
Aniline	Solid	ND	3300	ug/Kg		09/11/95 1946	
Anthracene	Solid	ND	3300	ug/Kg		09/11/95 1946	
Benzidine	Solid	ND	16500	ug/Kg		09/11/95 1946	
Benzo(a)anthracene	Solid	ND	3300	ug/Kg		09/11/95 1946	
Benzo(b)fluoranthene	Solid	ND	3300	ug/Kg		09/11/95 1946	
Benzo(j)fluoranthene	Solid	ND	3300	ug/Kg		09/11/95 1946	
Benzo(k)fluoranthene	Solid	ND	3300	ug/Kg		09/11/95 1946	
Benzo(ghi)perylene	Solid	ND	3300	ug/Kg		09/11/95 1946	
Benzo(a)pyrene	Solid	ND	3300	ug/Kg		09/11/95 1946	
Benzyl alcohol	Solid	ND	6600	ug/Kg		09/11/95 1946	
Butyl benzyl phthalate	Solid	ND	3300	ug/Kg		09/11/95 1946	
Bis(2-chloroethoxy)methane	Solid	ND	3300	ug/Kg		09/11/95 1946	
Bis(2-chloroethyl)ether	Solid	ND	3300	ug/Kg		09/11/95 1946	
Bis(2-chloroisopropyl)ether	Solid	ND	3300	ug/Kg		09/11/95 1946	
Bis(2-ethylhexyl)phthalate	Solid	ND	3300	ug/Kg		09/11/95 1946	
4-Bromophenyl phenyl ether	Solid	ND	3300	ug/Kg		09/11/95 1946	
4-Chloroaniline	Solid	ND	3300	ug/Kg		09/11/95 1946	
Chlorobenzilate	Solid	ND	3300	ug/Kg		09/11/95 1946	
1-Chloronaphthalene	Solid	ND	3300	ug/Kg		09/11/95 1946	
2-Chloronaphthalene	Solid	ND	3300	ug/Kg		09/11/95 1946	
4-Chlorophenyl phenyl ether	Solid	ND	3300	ug/Kg		09/11/95 1946	
Chrysene	Solid	ND	3300	ug/Kg		09/11/95 1946	
Diallate	Solid	ND	3300	ug/Kg		09/11/95 1946	
Dibenzo(a,j)acridine	Solid	ND	3300	ug/Kg		09/15/95 0246	
Dibenzo(a,h)anthracene	Solid	ND	3300	ug/Kg		09/11/95 1946	
Dibenzofuran	Solid	ND	3300	ug/Kg		09/11/95 1946	
1,2-Dichlorobenzene	Solid	ND	3300	ug/Kg		09/11/95 1946	
1,3-Dichlorobenzene	Solid	ND	3300	ug/Kg		09/11/95 1946	
1,4-Dichlorobenzene	Solid	ND	3300	ug/Kg		09/11/95 1946	

The analyses, opinions or interpretations contained in this report are based upon observations and material supplied by the client for whose exclusive and confidential use this report has been made. The interpretations or opinions expressed represent the best judgment of Core Laboratories. Core Laboratories, however, assumes no responsibility and makes no warranty or representations, express or implied, as to the productivity, proper operations, or profitableness of any oil, gas, coal or other mineral, property, well or sand in connection with which such report is used or relied upon for any reason

CORE LABORATORIES

LABORATORY TESTS RESULTS

Report Date: 09/20/95

JOB NUMBER: 954165 CUSTOMER: Daniel B. Stevens & Associates ATTN: Jeff Forbes

Customer Sample ID.: PIT 1, SE BORING
Sample Date.....: 08/18/95
Sample Time.....: 10:00
Sample Matrix.....: Soil

Laboratory Sample ID.: 954165-10
Date Received.....: 08/22/95
Time Received.....: 10:15

TEST DESCRIPTION	TEST MATRIX	FINAL RESULT	DETECTION LIMIT	UNITS OF MEASURE	TEST METHOD	DATE ANALYZED	TECHNICIAN
3,3-Dichlorobenzidine	Solid	ND	3300	ug/Kg		09/11/95 1946	
Diethyl phthalate	Solid	ND	3300	ug/Kg		09/11/95 1946	
p-Dimethylaminoazobenzene	Solid	ND	3300	ug/Kg		09/11/95 1946	
Dimethoate	Solid	ND	6600	ug/Kg		09/11/95 1946	
7,12-Dimethylbenz(a)anthracene	Solid	ND	3300	ug/Kg		09/11/95 1946	
alpha, alpha-Dimethylphenethylamine	Solid	ND	3300	ug/Kg		09/11/95 1946	
Dimethyl phthalate	Solid	ND	3300	ug/Kg		09/11/95 1946	
Di-n-butyl phthalate	Solid	ND	3300	ug/Kg		09/11/95 1946	
Di-n-octyl phthalate	Solid	ND	3300	ug/Kg		09/11/95 1946	
2,4-Dinitrotoluene	Solid	ND	3300	ug/Kg		09/11/95 1946	
2,6-Dinitrotoluene	Solid	ND	3300	ug/Kg		09/11/95 1946	
Dinoseb (DNBP)	Solid	ND	3300	ug/Kg		09/11/95 1946	
Diphenylamine	Solid	ND	3300	ug/Kg		09/11/95 1946	
1,2-Diphenylhydrazine	Solid	ND	3300	ug/Kg		09/11/95 1946	
Disulfoton	Solid	ND	3300	ug/Kg		09/11/95 1946	
Ethyl methane sulfonate	Solid	ND	3300	ug/Kg		09/11/95 1946	
Fluoranthene	Solid	ND	3300	ug/Kg		09/11/95 1946	
Fluorene	Solid	ND	3300	ug/Kg		09/11/95 1946	
Hexachlorobenzene	Solid	ND	3300	ug/Kg		09/11/95 1946	
Hexachlorobutadiene	Solid	ND	3300	ug/Kg		09/11/95 1946	
Hexachlorocyclopentadiene	Solid	ND	3300	ug/Kg		09/11/95 1946	
Hexachloroethane	Solid	ND	3300	ug/Kg		09/11/95 1946	
Hexachlorophene	Solid	ND	3300	ug/Kg		09/15/95 0246	
Hexachloropropene	Solid	ND	3300	ug/Kg		09/11/95 1946	
Indeno(1,2,3-cd)pyrene	Solid	ND	3300	ug/Kg		09/11/95 1946	
Isodrin	Solid	ND	3300	ug/Kg		09/11/95 1946	
Isophorone	Solid	ND	3300	ug/Kg		09/11/95 1946	
Isosafrole	Solid	ND	3300	ug/Kg		09/11/95 1946	
Kepone	Solid	ND	16500	ug/Kg		09/15/95 0246	
Methapyrilene	Solid	ND	3300	ug/Kg		09/11/95 1946	
3-Methylcholanthrene	Solid	ND	3300	ug/Kg		09/11/95 1946	

The analyses, opinions or interpretations contained in this report are based upon observations and material supplied by the client for whose exclusive and confidential use this report has been made. The interpretations or opinions expressed represent the best judgment of Core Laboratories. Core Laboratories, however, assumes no responsibility and makes no warranty or representations, express or implied, as to the productivity, proper operations, or profitableness of any oil, gas, coal or other mineral, property, well or sand in connection with which such report is used or relied upon for any reason whatsoever. This report shall not be reproduced except in its entirety, without the written approval of Core Laboratories.

CORELAB

CORE LABORATORIES

LABORATORY TESTS RESULTS

Report Date: 09/20/95

JOB NUMBER: 954165 CUSTOMER: Daniel B. Stevens & Associates ATTN: Jeff Forbes

Customer Sample ID.: PIT 1, SE BORING
Sample Date.....: 08/18/95
Sample Time.....: 10:00
Sample Matrix.....: Soil

Laboratory Sample ID.: 954165-10
Date Received.....: 08/22/95
Time Received.....: 10:15

TEST DESCRIPTION	TEST MATRIX	FINAL RESULT	DETECTION LIMIT	UNITS OF MEASURE	TEST METHOD	DATE ANALYZED	TECHNICIAN
Methyl methane sulfonate	Solid	ND	3300	ug/Kg		09/11/95 1946	
2-Methylnaphthalene	Solid	ND	3300	ug/Kg		09/11/95 1946	
Naphthalene	Solid	ND	3300	ug/Kg		09/11/95 1946	
1,4-Naphthoquinone	Solid	ND	3300	ug/Kg		09/11/95 1946	
1-Naphthylamine	Solid	ND	3300	ug/Kg		09/11/95 1946	
2-Naphthylamine	Solid	ND	3300	ug/Kg		09/11/95 1946	
o-Nitroaniline	Solid	ND	16500	ug/Kg		09/11/95 1946	
m-Nitroaniline	Solid	ND	16500	ug/Kg		09/11/95 1946	
p-Nitroaniline	Solid	ND	16500	ug/Kg		09/11/95 1946	
Nitrobenzene	Solid	ND	3300	ug/Kg		09/11/95 1946	
4-Nitroquinoline-1-oxide	Solid	ND	3300	ug/Kg		09/11/95 1946	
n-Nitrosodi-n-butylamine	Solid	ND	3300	ug/Kg		09/11/95 1946	
n-Nitrosodiethylamine	Solid	ND	3300	ug/Kg		09/11/95 1946	
n-Nitrosodimethylamine	Solid	ND	3300	ug/Kg		09/11/95 1946	
n-Nitrosomethylethylamine	Solid	ND	3300	ug/Kg		09/11/95 1946	
n-Nitrosomorpholine	Solid	ND	3300	ug/Kg		09/11/95 1946	
n-Nitrosodi-n-propylamine	Solid	ND	3300	ug/Kg		09/11/95 1946	
n-Nitrosodiphenylamine	Solid	ND	3300	ug/Kg		09/11/95 1946	
n-Nitrosopiperidine	Solid	ND	3300	ug/Kg		09/11/95 1946	
n-Nitrosopyrolidine	Solid	ND	3300	ug/Kg		09/11/95 1946	
5-Nitro-o-toluidine	Solid	ND	3300	ug/Kg		09/11/95 1946	
Ethyl parathion	Solid	ND	3300	ug/Kg		09/11/95 1946	
Pentachlorobenzene	Solid	ND	3300	ug/Kg		09/11/95 1946	
Pentachloronitrobenzene	Solid	ND	3300	ug/Kg		09/11/95 1946	
Phenacetin	Solid	ND	3300	ug/Kg		09/11/95 1946	
Phenanthrene	Solid	5000	3300	ug/Kg		09/11/95 1946	
p-Phenylenediamine	Solid	ND	3300	ug/Kg		09/11/95 1946	
Phorate	Solid	ND	3300	ug/Kg		09/11/95 1946	
2-Picoline	Solid	ND	3300	ug/Kg		09/11/95 1946	
Pronamide	Solid	ND	3300	ug/Kg		09/11/95 1946	
Pyrene	Solid	ND	3300	ug/Kg		09/11/95 1946	

The analyses, opinions or interpretations contained in this report are based upon observations and material supplied by the client for whose exclusive and confidential use this report has been made. The interpretations or opinions expressed represent the best judgment of Core Laboratories. Core Laboratories, however, assumes no responsibility and makes no warranty or representations, express or implied, as to the productivity, proper operations, or profitableness of any oil, gas, coal or other mineral, property, well or sand in connection with which such report is used or relied upon for any reason whatsoever. This report shall not be reproduced except in its entirety, without the written approval of Core Laboratories.

CORE LABORATORIES

LABORATORY TESTS RESULTS

Report Date: 09/20/95

JOB NUMBER: 954165 CUSTOMER: Daniel B. Stevens & Associates ATTN: Jeff Forbes

Customer Sample ID.: PIT 1, SE BORING
Sample Date.....: 08/18/95
Sample Time.....: 10:00
Sample Matrix.....: Soil

Laboratory Sample ID.: 954165-10
Date Received.....: 08/22/95
Time Received.....: 10:15

TEST DESCRIPTION	TEST MATRIX	FINAL RESULT	DETECTION LIMIT	UNITS OF MEASURE	TEST METHOD	DATE ANALYZED	TECHNICIAN
Pyridine	Solid	ND	3300	ug/Kg		09/11/95 1946	
Safrole	Solid	ND	3300	ug/Kg		09/11/95 1946	
1,2,4,5-Tetrachlorobenzene	Solid	ND	3300	ug/Kg		09/11/95 1946	
o-Toluidine	Solid	ND	3300	ug/Kg		09/11/95 1946	
1,2,4-Trichlorobenzene	Solid	ND	3300	ug/Kg		09/11/95 1946	
O,O,O-Triethyl phosphorothioate	Solid	ND	3300	ug/Kg		09/11/95 1946	
1,3,5-Trinitrobenzene	Solid	ND	3300	ug/Kg		09/11/95 1946	
Benzoic acid	Solid	ND	16500	ug/Kg		09/11/95 1946	
4-Chloro-3-methylphenol	Solid	ND	3300	ug/Kg		09/11/95 1946	
2-Chlorophenol	Solid	ND	3300	ug/Kg		09/11/95 1946	
2,4-Dichlorophenol	Solid	ND	3300	ug/Kg		09/11/95 1946	
2,6-Dichlorophenol	Solid	ND	3300	ug/Kg		09/11/95 1946	
2,4-Dimethylphenol	Solid	ND	3300	ug/Kg		09/11/95 1946	
2,4-Dinitrophenol	Solid	ND	16500	ug/Kg		09/11/95 1946	
2-Methyl-4,6-dinitrophenol	Solid	ND	16500	ug/Kg		09/11/95 1946	
2-Methylphenol (o-cresol)	Solid	ND	3300	ug/Kg		09/11/95 1946	
3 & 4 Methylphenol (m&p cresol)	Solid	ND	3300	ug/Kg		09/11/95 1946	
2-Nitrophenol	Solid	ND	3300	ug/Kg		09/11/95 1946	
4-Nitrophenol	Solid	ND	16500	ug/Kg		09/11/95 1946	
Pentachlorophenol	Solid	ND	16500	ug/Kg		09/11/95 1946	
Phenol	Solid	200000	33000	ug/Kg		09/13/95 0041	
2,3,4,6-Tetrachlorophenol	Solid	ND	3300	ug/Kg		09/11/95 1946	
2,4,5-Trichlorophenol	Solid	ND	3300	ug/Kg		09/11/95 1946	
2,4,6-Trichlorophenol	Solid	ND	3300	ug/Kg		09/11/95 1946	
Volatile Organics (Client Requested)					SW-846 8240		bfr
Acetonitrile	Solid	ND	500	ug/Kg		08/28/95 1341	
Acrolein	Solid	ND	200	ug/Kg		08/28/95 1341	
Acrylonitrile	Solid	ND	100	ug/Kg		08/28/95 1341	
Acetone	Solid	ND	500	ug/Kg		08/28/95 1341	
Allyl chloride	Solid	ND	100	ug/Kg		08/28/95 1341	

The analyses, opinions or interpretations contained in this report are based upon observations and material supplied by the client for whose exclusive and confidential use this report has been made. The interpretations or opinions expressed represent the best judgment of Core Laboratories. Core Laboratories, however, assumes no responsibility and makes no warranty or representations, express or implied, as to the productivity, proper operations, or profitableness of any oil, gas, coal or other mineral, property, well or sand in connection with which such report is used or relied upon for any reason whatsoever. This report shall not be reproduced except in its entirety, without the written approval of Core Laboratories.

CORE LABORATORIES

LABORATORY TESTS RESULTS

Report Date: 09/20/95

JOB NUMBER: 954165 CUSTOMER: Daniel B. Stevens & Associates ATTN: Jeff Forbes

Customer Sample ID.: PIT 1, SE BORING
Sample Date.....: 08/18/95
Sample Time.....: 10:00
Sample Matrix.....: Soil

Laboratory Sample ID.: 954165-10
Date Received.....: 08/22/95
Time Received.....: 10:15

TEST DESCRIPTION	TEST MATRIX	FINAL RESULT	DETECTION LIMIT	UNITS OF MEASURE	TEST METHOD	DATE ANALYZED	TECHNICIAN
Benzene	Solid	850	20	ug/Kg		08/28/95 1341	
Benzyl chloride	Solid	ND	20	ug/Kg		08/28/95 1341	
Bromobenzene	Solid	ND	20	ug/Kg		08/28/95 1341	
Bromochloromethane	Solid	ND	20	ug/Kg		08/28/95 1341	
Bromodichloromethane	Solid	ND	20	ug/Kg		08/28/95 1341	
Bromoform	Solid	ND	20	ug/Kg		08/28/95 1341	
Bromomethane	Solid	ND	50	ug/Kg		08/28/95 1341	
Methyl ethyl ketone (2-Butanone)	Solid	ND	500	ug/Kg		08/28/95 1341	
Carbon disulfide	Solid	60	20	ug/Kg		08/28/95 1341	
Carbon tetrachloride	Solid	ND	20	ug/Kg		08/28/95 1341	
Chlorobenzene	Solid	ND	20	ug/Kg		08/28/95 1341	
Chloroethane	Solid	ND	50	ug/Kg		08/28/95 1341	
2-Chloroethylvinyl ether	Solid	ND	20	ug/Kg		08/28/95 1341	
Chloroform	Solid	ND	20	ug/Kg		08/28/95 1341	
Chloromethane	Solid	ND	20	ug/Kg		08/28/95 1341	
2-Chloro-1,3-butadiene (chloroprene)	Solid	ND	20	ug/Kg		08/28/95 1341	
Dibromochloromethane	Solid	ND	20	ug/Kg		08/28/95 1341	
1,2-Dibromoethane (EDB)	Solid	ND	20	ug/Kg		08/28/95 1341	
1,2-Dibromo-3-chloropropane	Solid	ND	20	ug/Kg		08/28/95 1341	
Dibromomethane	Solid	ND	20	ug/Kg		08/28/95 1341	
trans-1,4-Dichloro-2-butene	Solid	ND	200	ug/Kg		08/28/95 1341	
Dichlorodifluoromethane	Solid	ND	50	ug/Kg		08/28/95 1341	
1,1-Dichloroethane	Solid	1200	600	ug/Kg		08/31/95 1305	
1,2-Dichloroethane	Solid	ND	20	ug/Kg		08/28/95 1341	
1,1-Dichloroethene	Solid	40	20	ug/Kg		08/28/95 1341	
cis-1,2-Dichloroethene	Solid	ND	20	ug/Kg		08/28/95 1341	
trans-1,2-Dichloroethene	Solid	ND	20	ug/Kg		08/28/95 1341	
1,2-Dichloropropane	Solid	ND	20	ug/Kg		08/28/95 1341	
cis-1,3-Dichloropropene	Solid	ND	20	ug/Kg		08/28/95 1341	
trans-1,3-Dichloropropene	Solid	ND	20	ug/Kg		08/28/95 1341	
Ethylbenzene	Solid	370	20	ug/Kg		08/28/95 1341	

The analyses, opinions or interpretations contained in this report are based upon observations and material supplied by the client for whose exclusive and confidential use this report has been made. The interpretations or opinions expressed represent the best judgment of Core Laboratories. Core Laboratories, however, assumes no responsibility and makes no warranty or representations, express or implied, as to the productivity, proper operations, or profitableness of any oil, gas, coal or other mineral, property, well or sand in connection with which such report is used or relied upon for any reason whatsoever. This report shall not be reproduced except in its entirety, without the written approval of Core Laboratories.

CORE LABORATORIES

LABORATORY TESTS RESULTS

Report Date: 09/20/95

JOB NUMBER: 954165 CUSTOMER: Daniel B. Stevens & Associates ATTN: Jeff Forbes

Customer Sample ID.: PIT 1, SE BORING
Sample Date.....: 08/18/95
Sample Time.....: 10:00
Sample Matrix.....: Soil

Laboratory Sample ID.: 954165-10
Date Received.....: 08/22/95
Time Received.....: 10:15

TEST DESCRIPTION	TEST MATRIX	FINAL RESULT	DETECTION LIMIT	UNITS OF MEASURE	TEST METHOD	DATE ANALYZED	TECHNICIAN
Ethyl methacrylate	Solid	ND	20	ug/Kg		08/28/95 1341	
2-Hexanone	Solid	460	20	ug/Kg		08/28/95 1341	
Iodomethane	Solid	ND	20	ug/Kg		08/28/95 1341	
Isobutyl alcohol	Solid	ND	200	ug/Kg		08/28/95 1341	
Methylacrylonitrile	Solid	ND	200	ug/Kg		08/28/95 1341	
Methylene chloride	Solid	160	20	ug/Kg		08/28/95 1341	
Methyl methacrylate	Solid	ND	20	ug/Kg		08/28/95 1341	
4-Methyl-2-pentanone (MIBK)	Solid	ND	200	ug/Kg		08/28/95 1341	
Pentachloroethane	Solid	ND	20	ug/Kg		08/28/95 1341	
Propionitrile	Solid	ND	500	ug/Kg		08/28/95 1341	
Styrene	Solid	ND	20	ug/Kg		08/28/95 1341	
1,1,1,2-Tetrachloroethane	Solid	ND	20	ug/Kg		08/28/95 1341	
1,1,2,2-Tetrachloroethane	Solid	ND	20	ug/Kg		08/28/95 1341	
Tetrachloroethene	Solid	40	20	ug/Kg		08/28/95 1341	
Toluene	Solid	9100	600	ug/Kg		08/31/95 1305	
1,1,1-Trichloroethane	Solid	16000	600	ug/Kg		08/31/95 1305	
1,1,2-Trichloroethane	Solid	ND	20	ug/Kg		08/28/95 1341	
Trichloroethene	Solid	ND	20	ug/Kg		08/28/95 1341	
Trichlorofluoromethane	Solid	ND	50	ug/Kg		08/28/95 1341	
1,2,3-Trichloropropane	Solid	ND	20	ug/Kg		08/28/95 1341	
Vinyl acetate	Solid	7000	6000	ug/Kg		08/31/95 1305	
Vinyl chloride	Solid	ND	50	ug/Kg		08/28/95 1341	
Xylenes (total)	Solid	2400	20	ug/Kg		08/28/95 1341	

The analyses, opinions or interpretations contained in this report are based upon observations and material supplied by the client for whose exclusive and confidential use this report has been made. The interpretations or opinions expressed represent the best judgment of Core Laboratories. Core Laboratories, however, assumes no responsibility and makes no warranty or representations, express or implied, as to the productivity, proper operations, or profitableness of any oil, gas, coal or other mineral, property, well or sand in connection with which such report is used or relied upon for any reason whatsoever. This report shall not be reproduced except in its entirety, without the written approval of Core Laboratories.

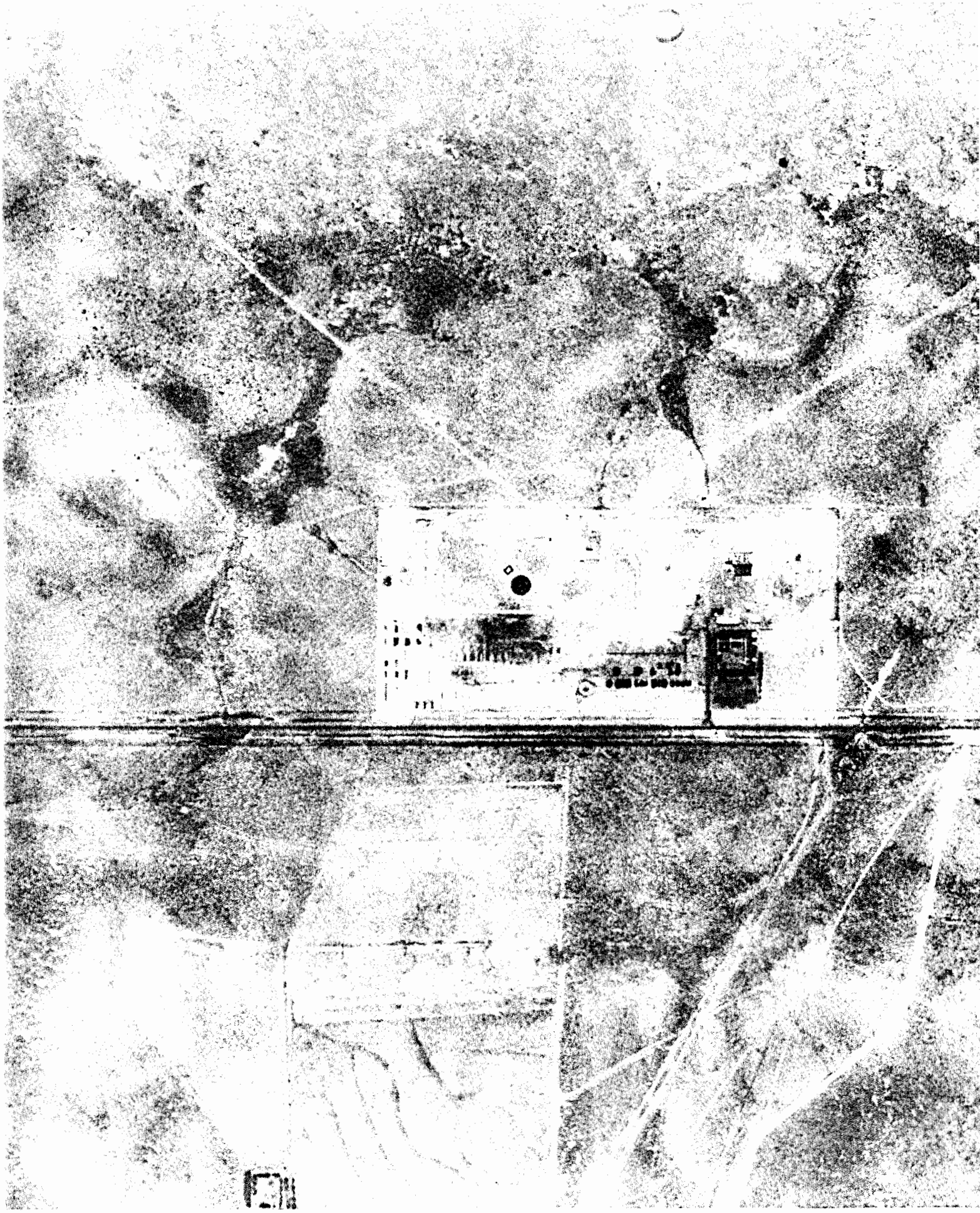

Attachment B

LABORATORY REPORT
LAGUNA, NEW MEXICO

Site No. 3

Drum 2

Parameter	Result
F-Listed Solvents (mg/kg)	
Tetrachloroethylene	1.7
Trichloroethylene	21.2
Dichloromethane	33.7
1,1,1-Trichloroethane	23.40%
1,1,2-Trichloroethane	29.0
o-Dichlorobenzene	1.6
Xylene	285.0
Ethylacetate	11.8
Ethylbenzene	52.1
Ethylether	3.8
Benzene	14.8
Heating Value (BTU/lb)	17,463.0
TOX (%)	9.9
Barium (mg/kg)	28.0
Cadmium (mg/kg)	0.03
Selenium (mg/kg)	3.20

DRAFT

Attachment C

WATER
QUALITY
SERVICES

17459 VILLAGE GREEN DRIVE
HOUSTON, TEXAS 77040
(713) 466-0958

ENVIRONMENTAL TESTING SPECIALISTS

Client Confidential
Attorney Work Product

March 27, 1989

Stephen J. Frost
Harding Lawson Associates
6220 Westpark Drive
Suite 100
Houston, TX 77057

LABORATORY REPORT

Project: Job 18996,001.12 Jaffe/Site No. 3
Sample Type: Solvent Sample ID: Drum 2
Sample Date: 03/09/89 Date Received: 03/13/89
WQS ID: 1224

Parameter	Result	MDL	Date	Analyst
TPH, %	66.9	1	3/22/89	AF
PCB, mg/l	<10.0	10.0	3/14/89	TW
F-Listed Solvents, mg/kg				
Tetrachloroethylene	1.7			
Trichloroethylene	21.2			
Dichloromethane	33.7			
1,1,1-Trichloroethane	23.40%			
1,1,2-Trichloroethane	29			
Carbon Tetrachloride	<1.0			
1,1,2-Trichloro-1,2,2-Trifluoroethane	<1.0			
Chlorobenzene	<1.0			
o-Dichlorobenzene	1.6			
Xylene	285			
Acetone	<1.0			
Ethylacetate	11.8			
Ethylbenzene	52.1			
Ethylether	3.8			
Methyl Isobutyl Ketone	<10.0			
n-Butyl Alcohol	<5.0			
Cyclohexanone	<10.0			
Methanol	<1.0			
Cresols, total	<50			

WATER
QUALITY
SERVICES

17459 VILLAGE GREEN DRIVE
HOUSTON, TEXAS 77040
(713) 466-0958

ENVIRONMENTAL TESTING SPECIALISTS

Client Confidential
Attorney Work Product

March 27, 1989

LABORATORY REPORT

Project: Job 18996,001.12 Jaffe/Site No. 3
Sample Type: Solvent Sample ID: Drum 2
Sample Date: 03/09/89 Date Received: 03/13/89
WQS ID: 1224

Parameter	Result	MDL	Date	Analyst
F-Listed Solvents (cont'd)				
Nitrobenzene	ND			
Methyl Ethyl Ketone	<5.0			
Carbon Disulfide	<1.0			
Isobutanol	<10.0			
Pyridine	<5.0			
Benzene	14.8			
2-Ethoxyethanol	ND			

ND = None Detected
* Interference

Quality Assurance: These analyses are performed in accordance with EPA guidelines for quality assurance. These procedures include the following as a minimum requirement: one in ten sample duplicates, method blank, and quarterly method performance against known samples. Analyses were performed using EPA 418.1, 624, 625, and SW846 3540,3550, and 8080.

WATER
QUALITY
SERVICES

17459 VILLAGE GREEN DRIVE
HOUSTON, TEXAS 77040
(713) 466-0958

ENVIRONMENTAL TESTING SPECIALISTS

Client Confidential
Attorney Work Product

March 27, 1989

Stephen J. Frost
Harding Lawson Associates
6220 Westpark Drive
Suite 100
Houston, TX 77057

LABORATORY REPORT

Project: Job 18996,001.12 Jaffe/Site No. 3
Sample Type: Solvent Sample ID: Drum 2
Sample Date: 03/09/89 Date Received: 03/13/89
WQS ID: 1224

Parameter	Result	MDL	Date	Analyst
pH	6.4			
Flashpoint, °F	96			
Heating Value, BTU/lb	17,463			
TOX, %	9.9			
Ash, wt. %	0.50			
Specific Gravity, @ 60°F	0.9273			
Kinematic Viscosity, @ 64°F	32.5			
Sediment & Water, Vol. %	3.0/2.0			
Sulphur, %	0.947			

Quality Assurance: These analyses are performed in accordance with EPA guidelines for quality assurance. These procedures include the following as a minimum requirement: one in ten sample duplicates, method blank, and quarterly method performance against known samples. Analyses were performed using

WATER
QUALITY
SERVICES

17459 VILLAGE GREEN DRIVE
HOUSTON, TEXAS 77040
(713) 466-0958

ENVIRONMENTAL TESTING SPECIALISTS

Client Confidential
Attorney Work Product

March 27, 1989

Stephen J. Frost
Harding Lawson Associates
6220 Westpark Drive
Suite 100
Houston, TX 77057

LABORATORY REPORT

Project: Job 18996,001.12 Jaffe/Site No. 3
Sample Type: Solvent Sample ID: Drum 2
Sample Date: 03/09/89 Date Received: 03/13/89
WQS ID: 1224

Parameter	Results	MDL	Date	Time	Analyst
Arsenic, mg/kg	<1.05	1.05			
Barium, mg/kg	28.0	0.24			
Cadmium, mg/kg	0.03	0.02			
Chromium, mg/kg	<0.10	0.10			
Lead, mg/kg	<0.10	0.10			
Mercury, mg/kg	<0.096	0.096			
Selenium, mg/kg	3.20	2.10			
Silver, mg/kg	<0.009	0.009			
Zinc, mg/kg	0.56	0.02			

Quality Assurance: These analyses are performed in accordance with EPA guidelines for quality assurance. These procedures include the following as a minimum requirement: one in ten sample duplicates, method blank, and quarterly method performance against known samples. Analyses were performed using EPA SW-846 1310, 3010, 3040, 7061, 7080, 7130, 7191, 7420, 7470, 7741, and 7760.

WATER QUALITY SERVICES

Anne Fidelman

Anne Fidelman
General Manager

cc: Mr. James L. Jaffe
Attorney at Law

LABORATORY REPORT
MOUNTAINAIR, NEW MEXICO

Site No. 2

3 Drums Trichloroethane

Parameter	Result
F-Listed Solvents (mg/kg)	
Tetrachloroethylene	4.4
Trichloroethylene	0.99%
1,1,1-Trichloroethane	55.09%
1,1,2-Trichloroethane	17.1
Carbon Tetrachloride	9.4
Chlorobenzene	3.4
Xylene	1.06%
Ethylacetate	566.0
Ethylbenzene	29.6
Ethylether	343.0
Cyclohexanone	41.1
Methanol	3.7
Methyl Ethyl Ketone	859.0
Carbon Disulfide	134.0
Isobutanol	701.0
Benzene	0.49%
Heating Value (BTU/lb)	14,015.0
TOX (ppm)	30.8
Cadmium (mg/kg)	0.04
Lead (mg/kg)	0.41
Selenium (mg/kg)	0.39

DRAFT

WATER
QUALITY
SERVICES

17459 VI GE GREEN DRIVE
HOUSTON, TEXAS 77040
(713) 466-0958

ENVIRONMENTAL TESTING SPECIALISTS

Client Confidential
Attorney Work Product

March 27, 1989

Stephen J. Frost
Harding Lawson Associates
6220 Westpark Drive
Suite 100
Houston, TX 77057

LABORATORY REPORT

Project: Job 18996,001.12 Jaffe/Site No. 2
Sample Type: Solvent Sample ID: 3 Drums Trichloroethane
Sample Date: 03/08/89 Date Received: 03/13/89
WQS ID: 1216

Parameter	Result	MDL	Date	Analyst
TPH, %	45.3	1	3/22/89	AF
PCB, mg/l	<10.0	10	3/21/89	TW
F-Listed Solvents, mg/kg				
Tetrachloroethylene	4.4			
Trichloroethylene	0.99%			
Dichloromethane	294			
1,1,1-Trichloroethane	55.09%			
1,1,2-Trichloroethane	17.1			
Carbon Tetrachloride	9.4			
1,1,2-Trichloro-1,2,2-Trifluoroethane	<1.0			
Chlorobenzene	3.4			
o-Dichlorobenzene	<1.0			
Xylene	1.06%			
Acetone	5.5			
Ethylacetate	566			
Ethylbenzene	29.6			
Ethylether	343			
Methyl Isobutyl Ketone	<1.0			
n-Butyl Alcohol	<1.0			
Cyclohexanone	41.1			
Methanol	3.7			
Cresols, total	<50			

WATER
QUALITY
SERVICES

17459 VI GE GREEN DRIVE
HOUSTON, TEXAS 77040
(713) 466-0958

ENVIRONMENTAL TESTING SPECIALISTS

Client Confidential
Attorney Work Product

March 27, 1989

LABORATORY REPORT

Project: Job 18996,001.12 Jaffe/Site No. 2
Sample Type: Solvent Sample ID: 3 Drums Trichloroethane
Sample Date: 03/08/89 Date Received: 03/13/89
WQS ID: 1216

Parameter	Result	MDL	Date	Analyst
F-Listed Solvents (cont'd)				
Nitrobenzene	ND			
Methyl Ethyl Ketone	859			
Carbon Disulfide	134			
Isobutanol	701			
Pyridine	<10.0			
Benzene	0.49%			
2-Ethoxyethanol	ND			

ND = None Detected
* Interference

Quality Assurance: These analyses are performed in accordance with EPA guidelines for quality assurance. These procedures include the following as a minimum requirement: one in ten sample duplicates, method blank, and quarterly method performance against known samples. Analyses were performed using EPA 418.1, 624, 625, and SW846 3540,3550, and 8080.

WATER
QUALITY
SERVICES

17459 \ AGE GREEN DRIVE
HOUSTON, TEXAS 77040
(713) 466-0958

ENVIRONMENTAL TESTING SPECIALISTS

Client Confidential
Attorney Work Product

March 27, 1989

Stephen J. Frost
Harding Lawson Associates
6220 Westpark Drive
Suite 100
Houston, TX 77057

LABORATORY REPORT

Project: Job 18996,001.12 Jaffe/Site No. 2
Sample Type: Solvent Sample ID: 3 Drums Trichloroethane
Sample Date: 03/08/89 Date Received: 03/13/89
WQS ID: 1216

Parameter	Result	MDL	Date	Analyst
pH	6.4			
Flashpoint, ^{o}F	<75			
Heating Value, BTU/lb	14,015			
TOX, ppm	30.8			
Ash, wt. %	0.0008			
Specific Gravity, @ $60^{o}F$	0.9729			
Kinematic Viscosity, @ $64^{o}F$	10.0			
Sediment & Water, Vol. %	.05/0			
Sulphur, %	1.979			

Quality Assurance: These analyses are performed in accordance with EPA guidelines for quality assurance. These procedures include the following as a minimum requirement: one in ten sample duplicates, method blank, and quarterly method performance against known samples. Analyses were performed using

WATER
QUALITY
SERVICES

17459 VILLAGE GREEN DRIVE
HOUSTON, TEXAS 77040
(713) 466-0958

ENVIRONMENTAL TESTING SPECIALISTS

Client Confidential
Attorney Work Product

March 27, 1989

Stephen J. Frost
Harding Lawson Associates
6220 Westpark Drive
Suite 100
Houston, TX 77057

LABORATORY REPORT

Project: Job 18996,001.12 Jaffe/Site No. 2
Sample Type: Solvent Sample ID: 3 Drums Trichloroehtane
Sample Date: 03/08/89 Date Received: 03/13/89
WQS ID: 1216

Parameter	Results	MDL	Date	Time	Analyst
Arsenic, mg/kg	<0.98	0.98			
Barium, mg/kg	<0.22	0.22			
Cadmium, mg/kg	0.04	0.02			
Chromium, mg/kg	<0.10	0.10			
Lead, mg/kg	0.41	0.10			
Mercury, mg/kg	<0.074	0.074			
Selenium, mg/kg	0.39	0.39			
Silver, mg/kg	<0.008	0.008			
Zinc, mg/kg	<0.02	0.02			

Quality Assurance: These analyses are performed in accordance with EPA guidelines for quality assurance. These procedures include the following as a minimum requirement: one in ten sample duplicates, method blank, and quarterly method performance against known samples. Analyses were performed using EPA SW-846 1310, 3010, 3040, 7061, 7080, 7130, 7191, 7420, 7470, 7741, and 7760.

WATER QUALITY SERVICES

Anne Fidelman

Anne Fidelman
General Manager

cc: Mr. James L. Jaffe
Attorney at Law

Form No. 1136

s Eastern Transmission Corporation an bsidiaries

ESTIMATED TIMING OF EXPENDITURES

E. E. No. _____ Transwestern Pipeline Company (Company Name) AFE No. _____

Prelim. Ref. No. 567-586 Company No. 09

Gas Western - Approp. #10/23/81-04
Profit or Cost Center and Appropriation Reference No.

☒ Property Addition	☐ Preliminary Investigation	☐ Research & Development	☐ Other Work	☐ Advances For Gas	☐ Property Retirement	☐ Other (Specify)

YEAR 1982

January	$	
February		
March		
April		
May		
June		
July	5,000	
August	7,245	
September	7,245	
October	7,245	
November	7,245	
December	7,245	
Total for the year		$ 41,225

YEAR _____

January	$	
February		
March		
April		
May		
June		
July		
August		
September		
October		
November		
December		
Total for the year		$

YEAR _____

January	$	
February		
March		
April		
May		
June		
July		
August		
September		
October		
November		
December		
Total for the year		$

Grand Total (Authorized Amount) $ 41.225

ESTIMATE OF PROPERTY ADDITIONS

E. E. No. 567-586

AFE No.

Prepared By Francis M. Cox

Checked By

DESCRIPTION	MATERIAL	INSTALLATION	SUB-TOTALS	TOTALS
05 - Site Improvements				
107 Dikes	1,200	1,300	2,500	
TOTAL FEATURE 05				2,500
26 - Major Gas Piping				
101 Foundations	1,200	900	2,100	
123 Drain Lines	13,525	13,100	26,625	
Tanks	8,000	2,000	10,000	
TOTAL FEATURE 26				38,725
ESTIMATE TOTAL	23,925	17,300	41,225	41,225

1500
Rev. 6-77

DISTRIC III WASTE STORAGE PROJECT

A. F. E. # JOB # FEATURE # SHEET A-1

BY

DATE

STATION	NEW/EXISTING	ITEM	LOCATION: N/S	E/W
9	EXISTING	PIG TRAP	N 8+10	E 1+10
24" P.H.	EXISTING	PIG TRAP	N 9+30	E 2+10
24" W.T.	EXISTING	PIG TRAP	N 9+30	E 2+30
24" W.T.L.	NEW	MUFFLER	N 11+00	E 2+00
	NEW	TANK	N 11+00	E 1+00
WT-1	EXISTING	PIG TRAP	S 6+20	W 1+50
	EXISTING	PIG TRAP	S 6+90	W 3+04
	EXISTING	PIG TRAP	S 7+20	W 3+29
	NEW	MUFFLER	S 7+00	0+00
	NEW	TANK	S 6+50	E 1+00

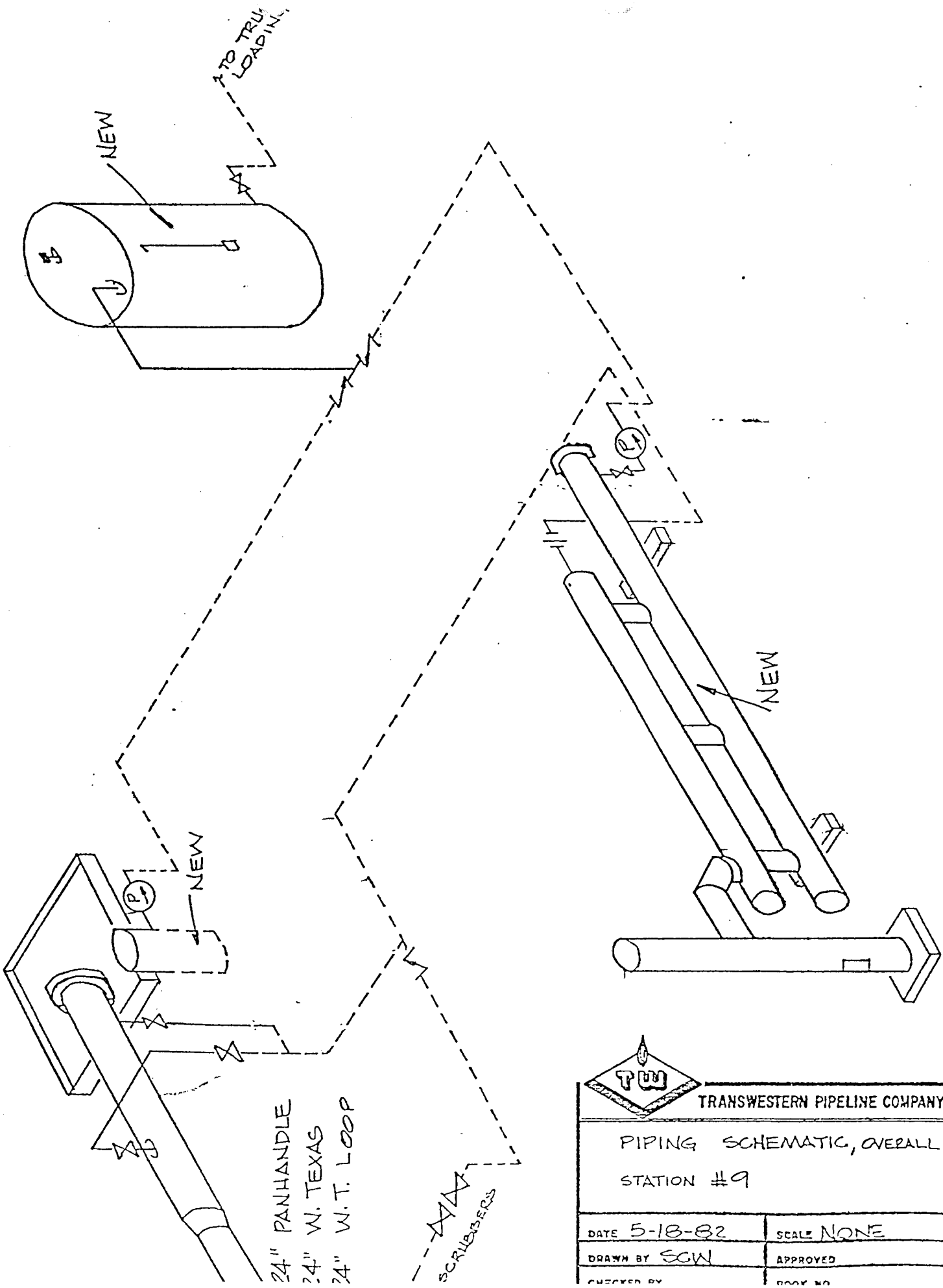

TRANSWESTERN PIPELINE COMPANY

PIPING SCHEMATIC, OVERALL

STATION #9

DATE 5-18-82	SCALE NONE
DRAWN BY SGW	APPROVED
CHECKED BY	BOOK NO

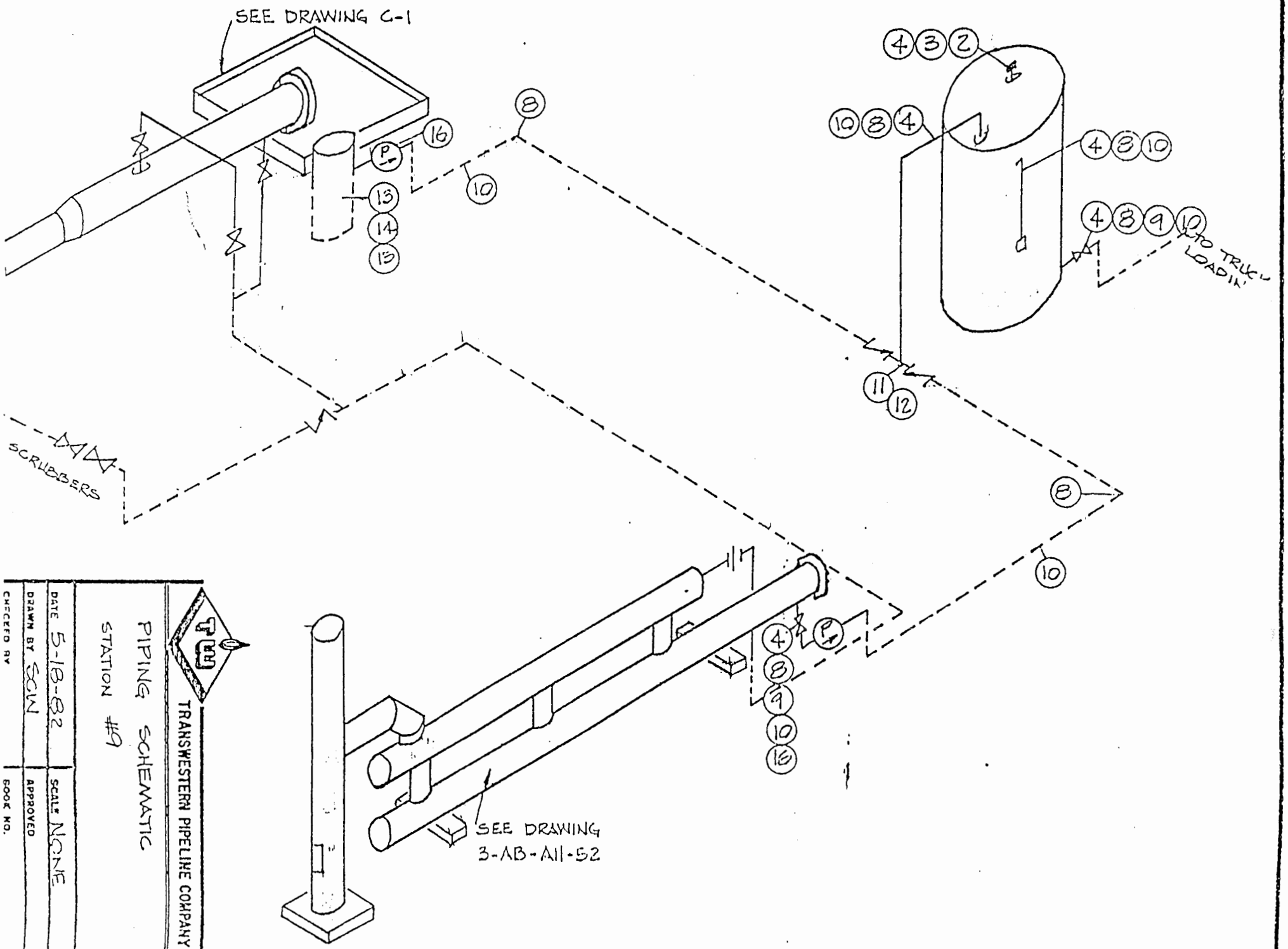

TRANSWESTERN PIPELINE COMPANY

PIPING SCHEMATIC

STATION #9

DATE 5-18-82	SCALE NONE
DRAWN BY SGW	APPROVED
CHECKED BY	BOOK NO.

BILL OF MATERIAL

Manufacturer to mark ALL EQUIPMENT as listed below, using both numbers, as example 46-1, 46-2, etc. SHEET A-4

No. Reqd.	Size	Description	Item No.	Re
1	500 BBL.	Tank, 15'-6" diameter x 16' high, 1/4" thick steel plate bottom, 3/16" thick steel side walls & top, shell & deck complete with standard connections, accessories included are: outside ladder, 8" round thief hatch, 24" x 36" clean-out, 4" connections; 2" drain line, 1" rolline connection, 2 sections of 36" sight glass (beginning 4" from bottom)	1	
1	2"	Vent, ANSI 150#, Groth Model 7613	2	
1	2"	Flange, RF, ANSI 150#, threaded	3	
4	2" x 6"	Nipple standard threaded	4	
1	6"	Flame arrestor, ANSI 150#, Groth Model 7618	5	
1	6"	Flange, RF ANSI 150#, threaded	6	
1	2" x 6"	Reducer, standard, concentric, threaded	7	
12	2"	ELL, 90° LR, standard, threaded	8	
1	2"	Valve, gate, ANSI 150#, threaded	9	
pprox. 250'	2"	Pipe, 2.375" O.D. x 0.154 W.T., SCH 40, threaded	10	
1	2"	Tee, straight, standard, threaded	11	
2	2"	Valve, check, swing, ANSI 150#, threaded	12	

*SHOP FABRICATED FOR FIELD FIT

BILL OF MATERIAL

...ufacturer to mark ALL EQUIPMENT as listed below, using both numbers, as example 46-1, 46-2, etc. SHEET A-5

No. Reqd.	Size	Description	Item No.	R
1	10 BBL.	Sump, used steel pipe, 42" O.D. x 0.500 W.T., 84" high with 72" below grade, 1/4" steel plate bottom, inlet opening: welded to part 'C' on funnel channel (4" H x 6" W x 10" L welded together), outlet opening: to fit 2.375" pipe	13	Sho Fab.
1	43" Dia.	Cover, 1/4" steel plate, 1" welded edge, #4 smooth bar handles	14	Sho Fab.
1 *	See Drawing	Funnel channel with cover, 1/4" steel plate, welded joints.	15	Sho Fab.
		Part A: Top & bottom 7" x 12"		
		Sides 6" x 7"		
		Part B: Moving Clockwise		
		Slanted top 12" x 6.3" x 6" x 6.3"		
		Flat bottom 12" x 6" x 6" x 6"		
		Sides 6" x 6.3" x 4" x 6"		
		Part C: Top & bottom 6" x 10"		
		Sides 4" x 10"		
		Part D: Front 6" x 20"		
		Straps 2" x 7" & 2" x 3"		
		Handles Bent #4 Smooth Bar		
2	2"	Pump, Double-Diaphragm	16	

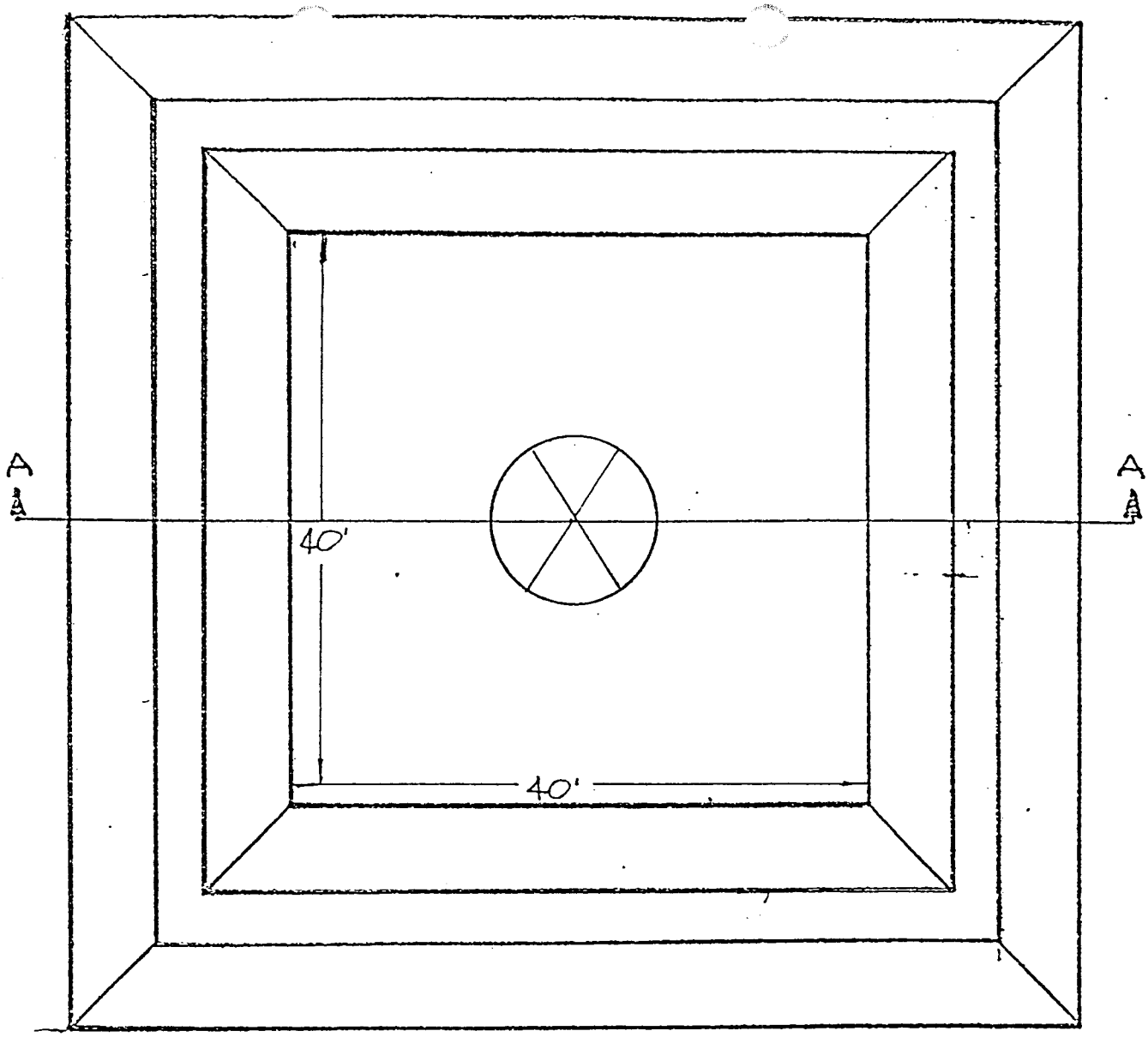

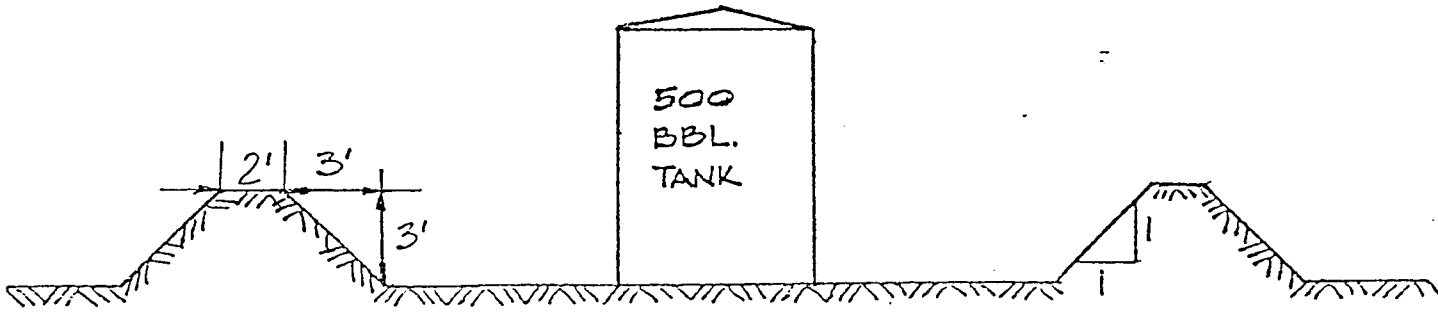

SECTION A-A

TRANSWESTERN PIPELINE COMPAN

EARTHEN DIKE

STATION: NINE

DATE 5-3-82	SCALE NONE
DRAWN BY SCW	APPROVED
CHECKED BY	BOOK NO.

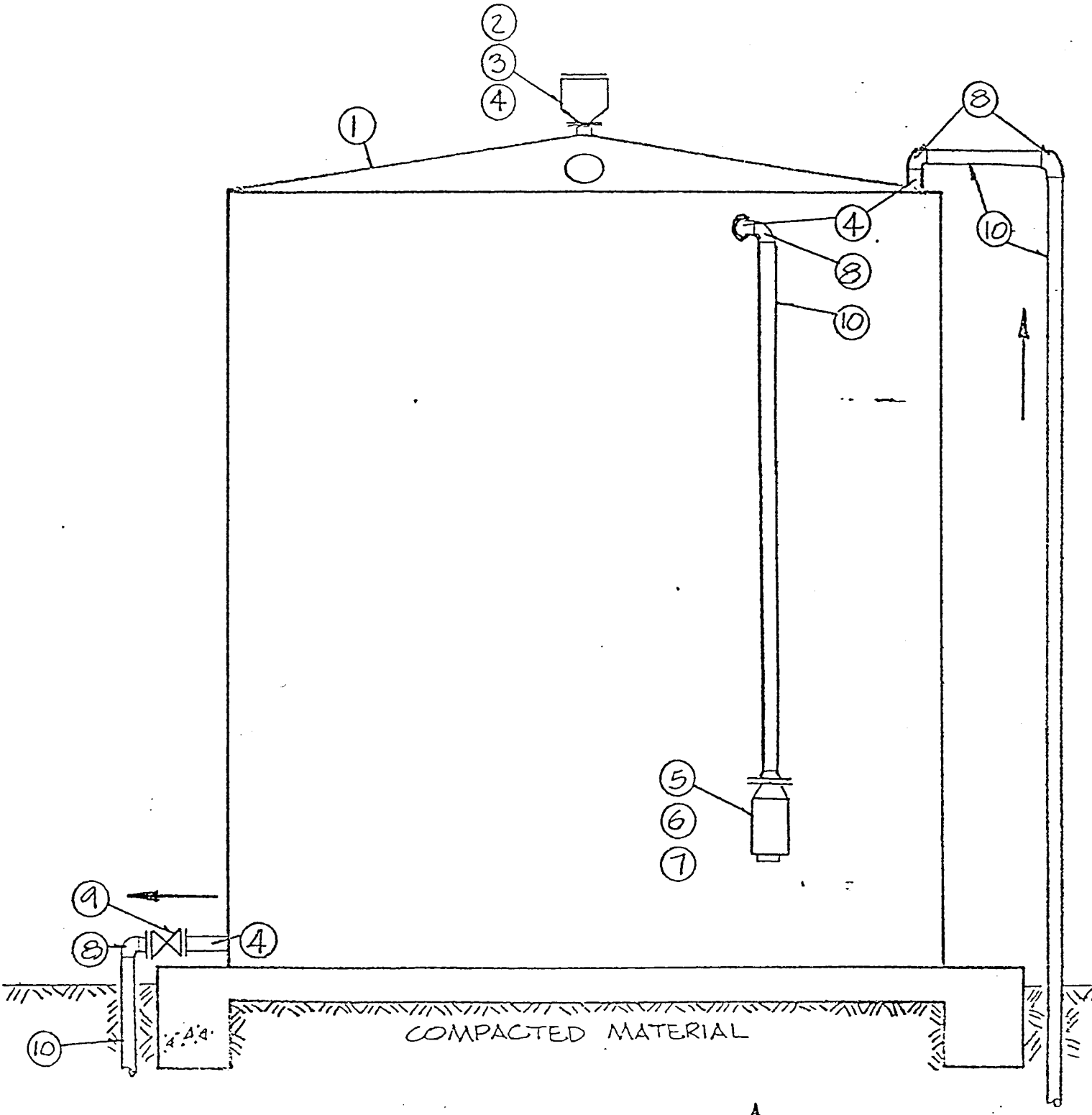

TRANSWESTERN PIPELINE COMPANY

500 BBL. TANK

STATION #9

DATE 5-3-82	SCALE NONE
DRAWN BY SCW	APPROVED

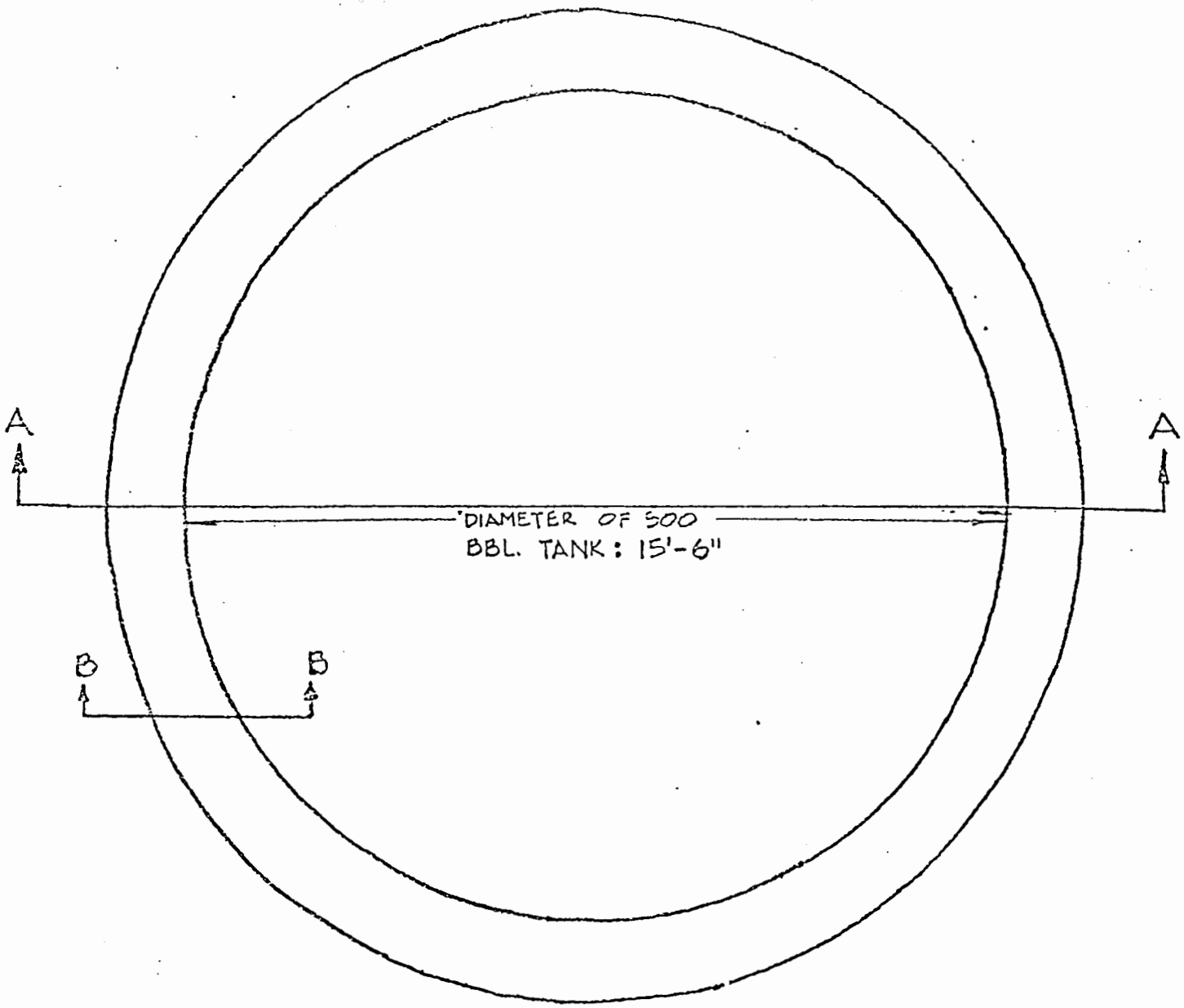

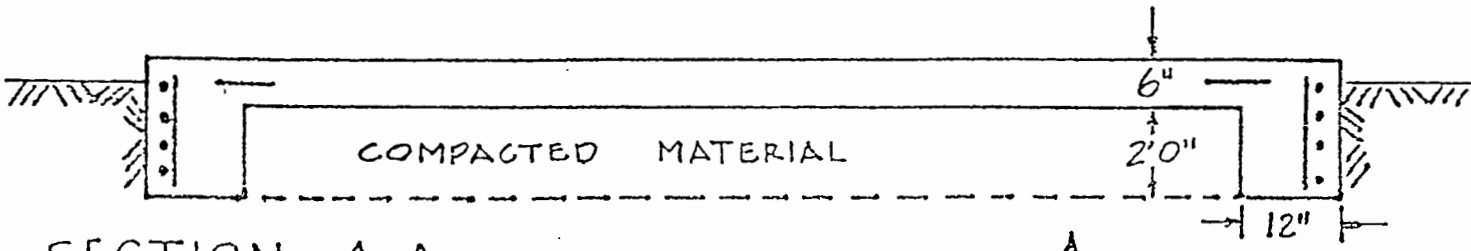

SECTION A-A

TRANSWESTERN PIPELINE COMPAN

STATION #9

TANK SLAB

DATE 3-15-82	SCALE NONE
DRAWN BY SGH	APPROVED

SECTION B-B

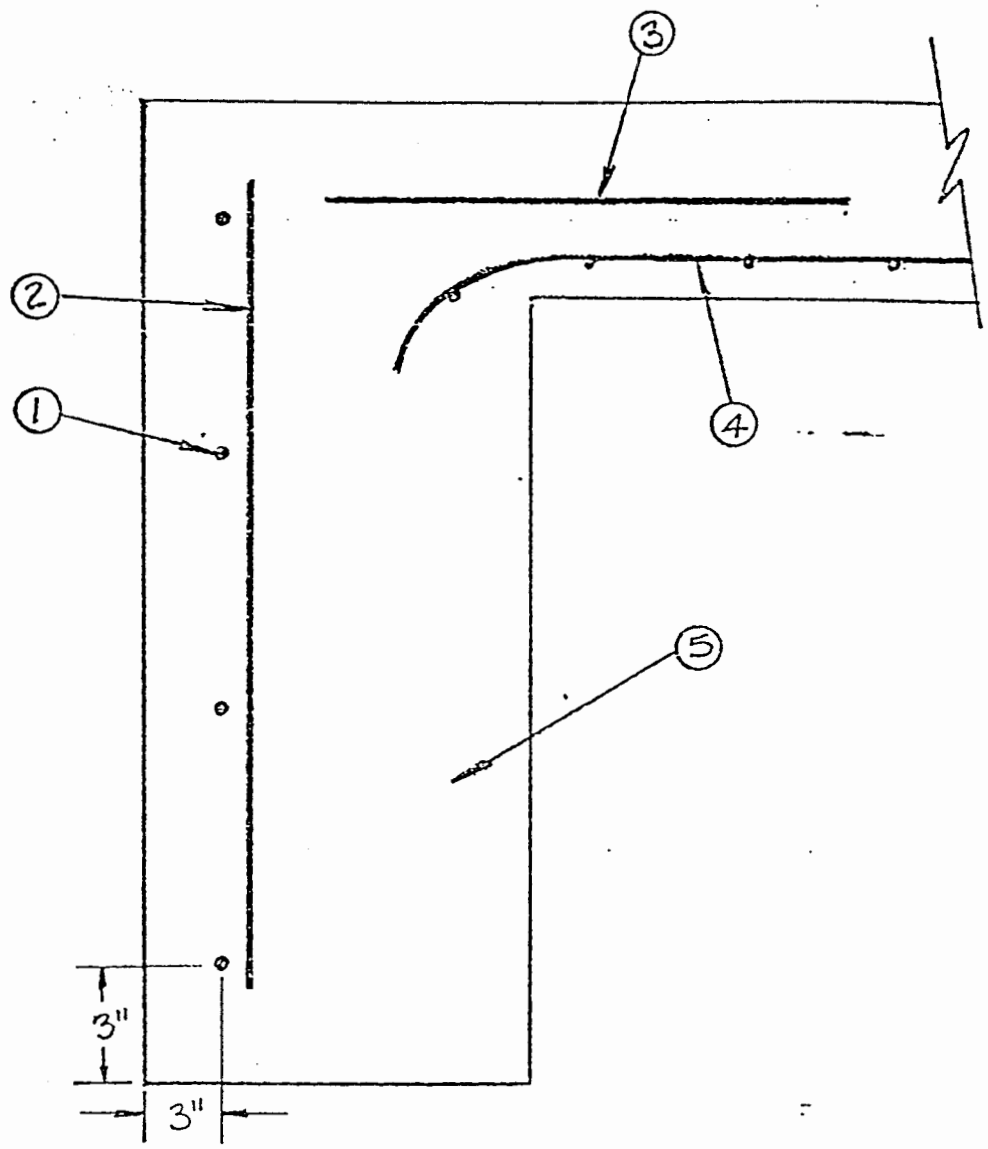

MK	DESCRIPTION
1	4 #4 REBAR PLACED 8" ON CENTER, HORIZONTAL
2	#4 REBAR PLACED 12" ON CENTER, VERTICAL
3	#4 REBAR PLACED 24" ON CENTER, HORIZONTAL, 18" LONG
4	6 x 6 x 6/6 WELDED WIRE FABRIC
5	3000 PSI CONCRETE

TRANSWESTERN PIPELINE COMPANY

TANK SLAB

STATION #9

DATE 5-3-82	SCALE NONE
DRAWN BY SCW	APPROVED

BILL OF MATERIAL

Manufacturer to mark ALL EQUIPMENT as listed below, using both numbers, as example 46-1, 46-2, etc. SHEET B

No. Reqd.	Size	Description	Item No.
1	500 BBL.	Tank, 15'-6" diameter x 16' high, 1/4" thick steel plate bottom, 3/16" thick steel side walls & top, shell & deck complete with standard connections, accessories included are: outside ladder, 8" round thief hatch, 24" x 36" clean-out, 4" connections, 2" drain line, 1" rolline connection, 2 sections of 36" sight glass (beginning 4" from bottom)	1
1	2"	Vent, ANSI 150#, Groth Model 7613	2
1	2"	Flange, RF, ANSI 150#, threaded	3
4	2" x 6"	Nipple, standard, threaded	4
1	6"	Flame arrestor, ANSI 150#, Groth Model 7618	5
1	6"	Flange, RF, ANSI 150#, threaded	6
1	2" x 6"	Reducer, standard, concentric, threaded	7
4	2"	ELL, 90° LR, standard, threaded	8
1	2"	Valve, gate, ANSI 150#, threaded	9
See Drawing	2"	Pipe, 2.375" O.D. x 0.154 W.T., SCH 40, threaded	10

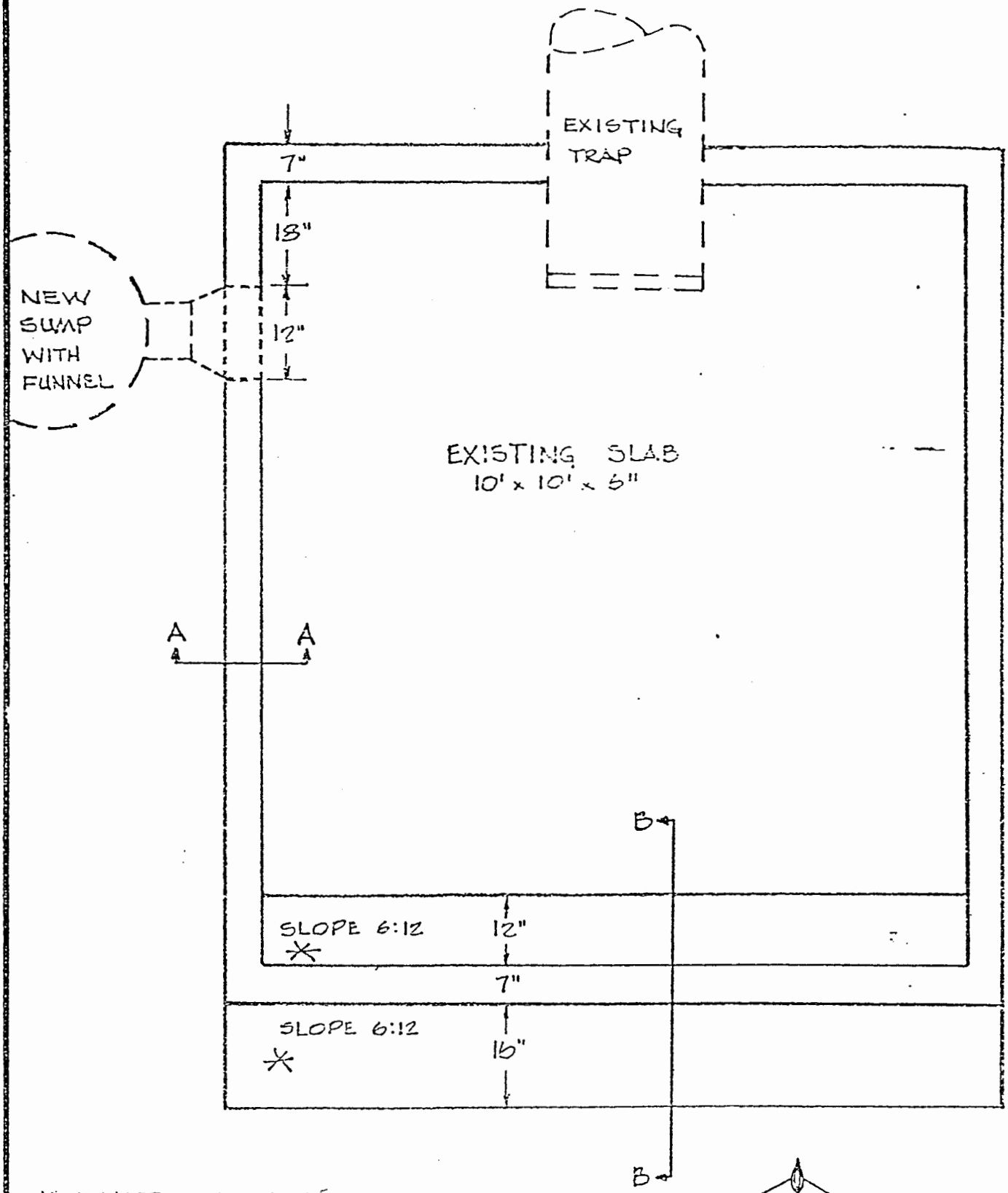

* RAMPED AREA FOR ENTRY/EXIT WITH TRACTOR

TRANSWESTERN PIPELINE COMPANY

STATION #9

CURBING AND RAMP

DATE 5-3-82	SCALE NONE
DRAWN BY SCW	APPROVED

SECTION A-A

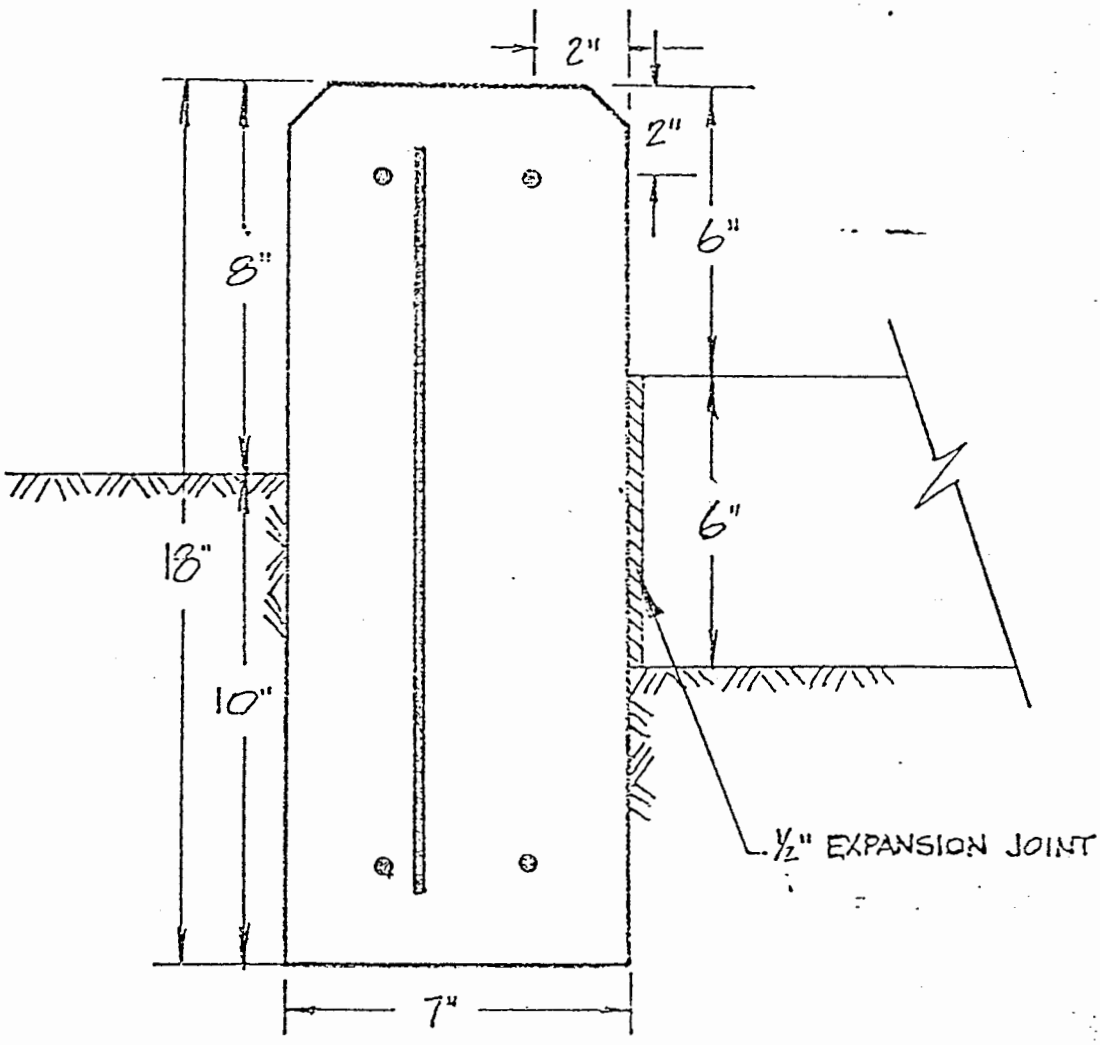

4-#4 REBAR PLACED AS SHOWN, HORIZONTAL

#4 REBAR PLACED VERTICALLY 24" ON CENTER, ATTACHED TO ALTERNATING SIDES

3000 PSI CONCRETE

TW TRANSWESTERN PIPELINE COMPANY

STATION #9

CURBING AT PIG TRAP

DATE 5-3-82	SCALE NONE
DRAWN BY SCW	APPROVED

SECTION B-B

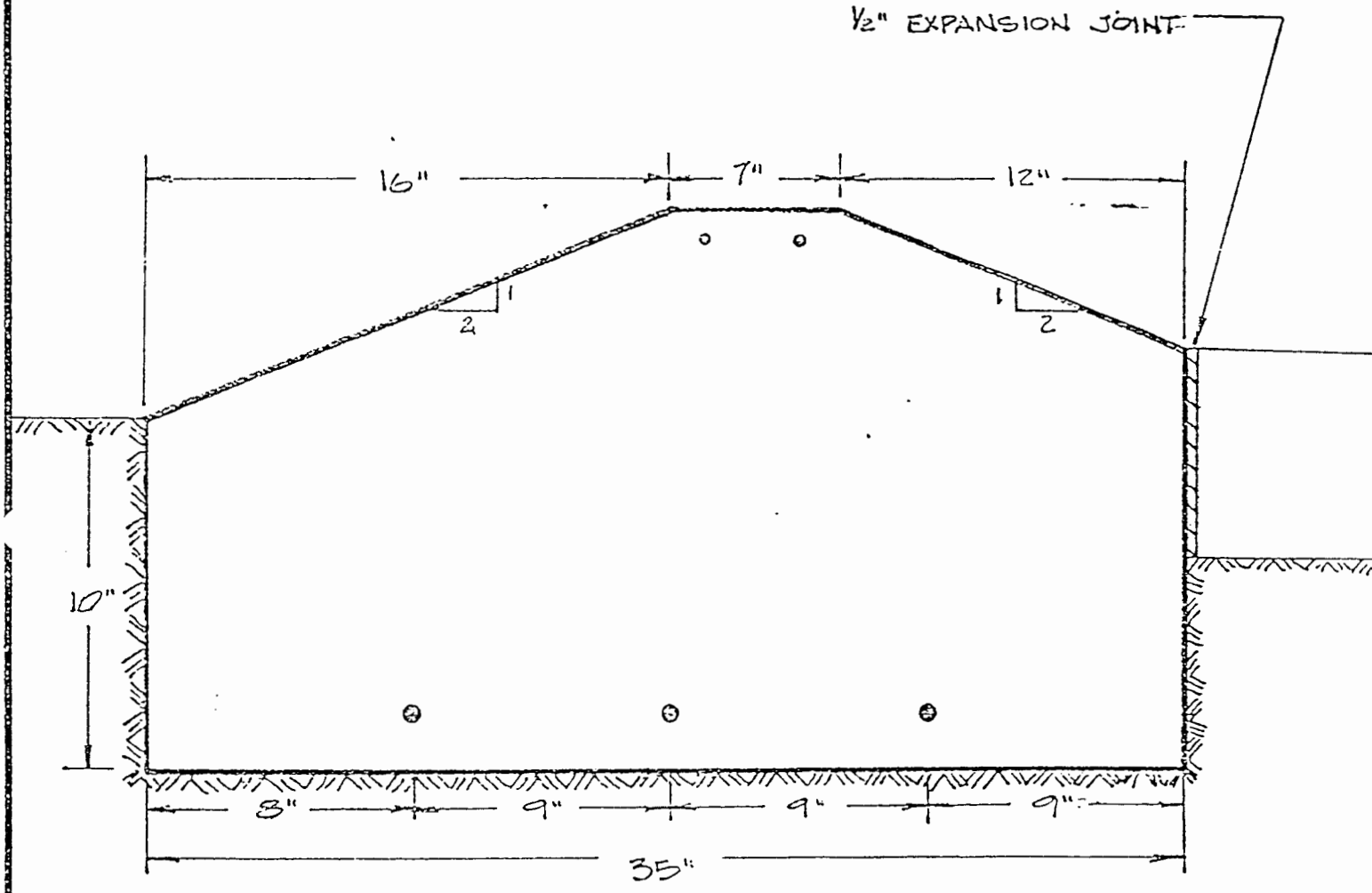

2 #4 REBAR PLACED IN TOP AS SHOWN

3 #6 REBAR PLACED IN BOTTOM AS SHOWN

3000 PSI CONCRETE.

TRANSWESTERN PIPELINE COMPAN

TRACTOR RAMP AT PIG TRAP

STATION #9

DATE 5-13-82	SCALE NONE
DRAWN BY ECN	APPROVED
CHECKED BY	BOOK NO.

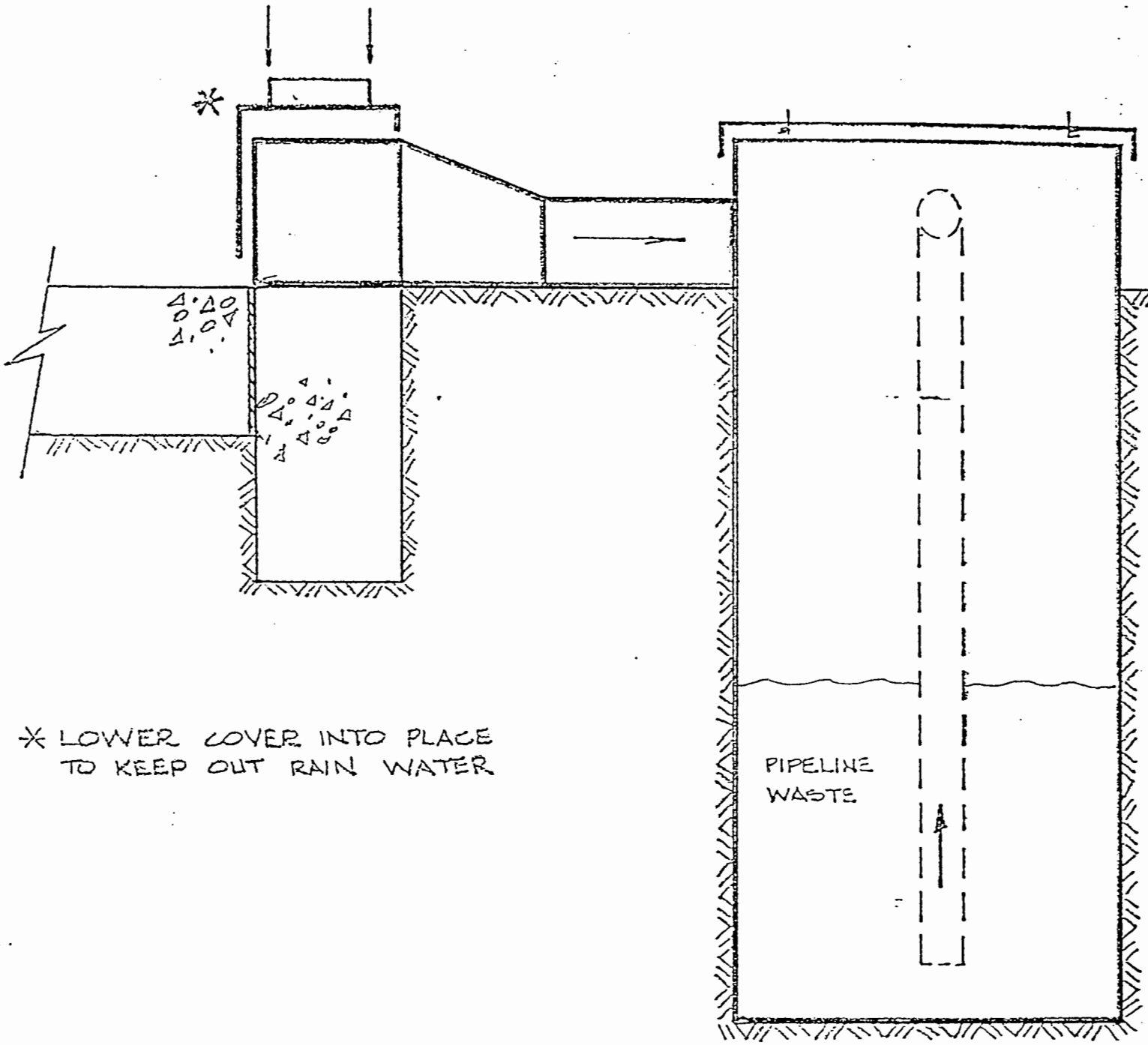

* LOWER COVER INTO PLACE
TO KEEP OUT RAIN WATER

TW

TRANSWESTERN PIPELINE COMPANY

SUMP WITH FUNNEL IN PLACE

STATION #9

DATE 5-18-82	SCALE NONE
DRAWN BY SCW	APPROVED
CHECKED BY	BOOK NO.

SHOP FAB.

1/4" STL. PL. W/ WELDED JOINTS

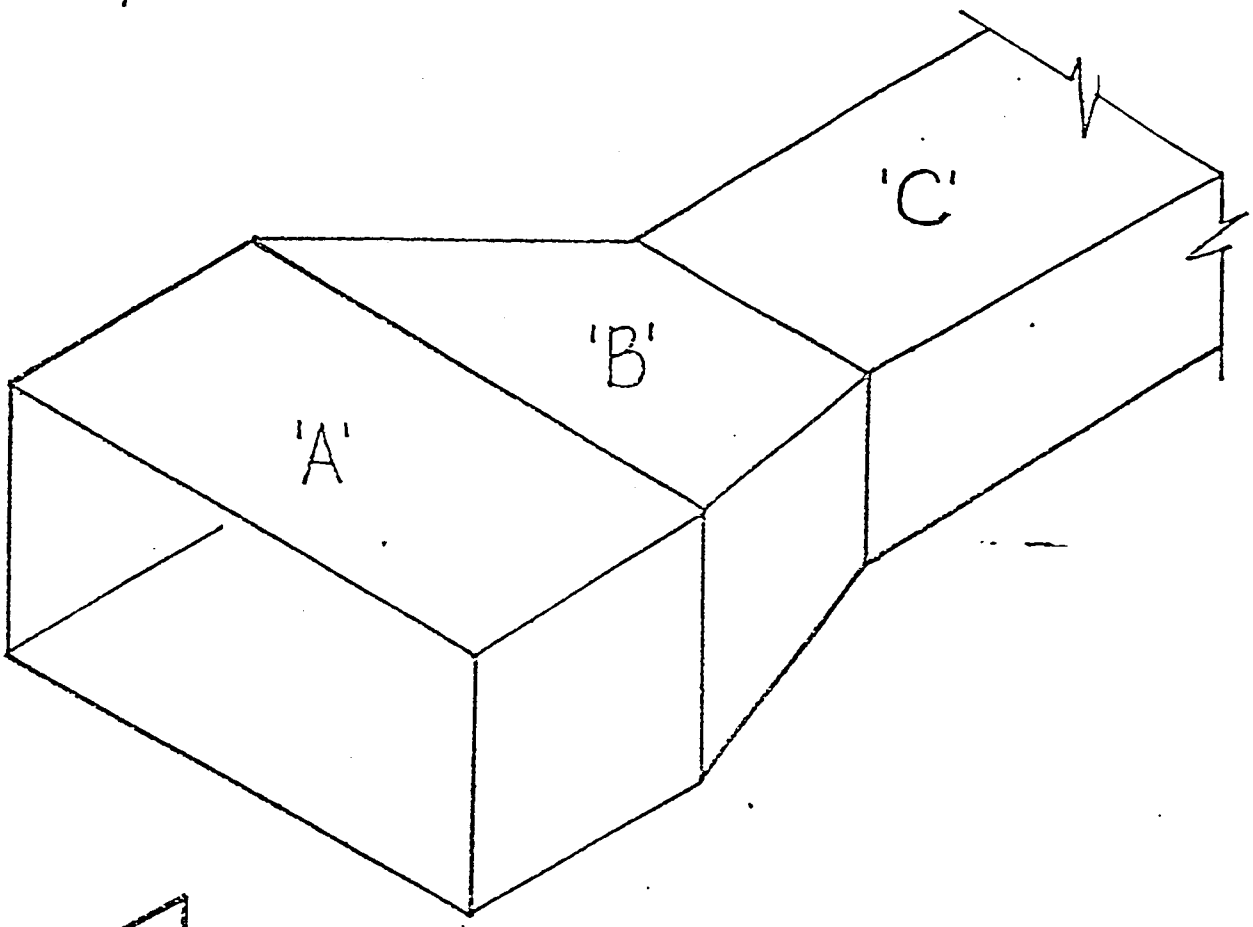

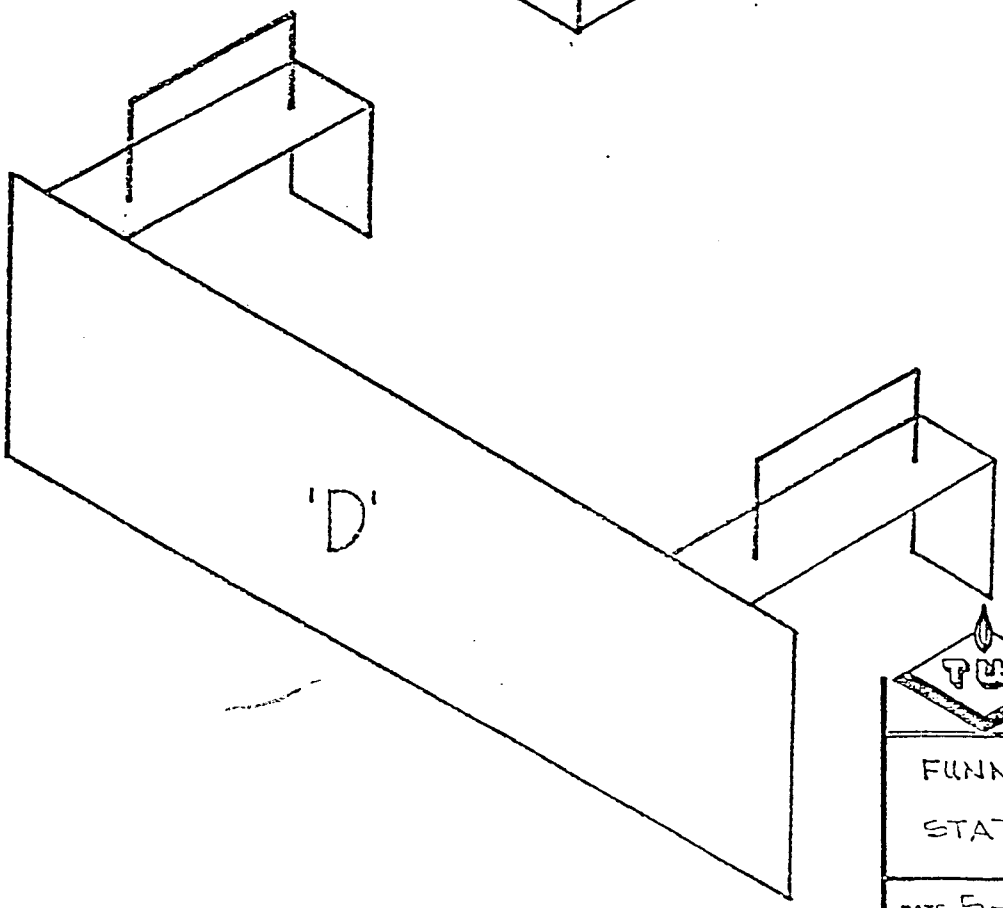

TRANSWESTERN PIPELINE COMPAN

FUNNEL CHANNEL W/ COVE

STATION #9

DATE 5-14-82	SCALE NONE
DRAWN BY SCW	APPROVED
CHECKED BY	BOOK NO.

SHOP FAB

1/4" STL. PL. W/ WELDED JOINTS

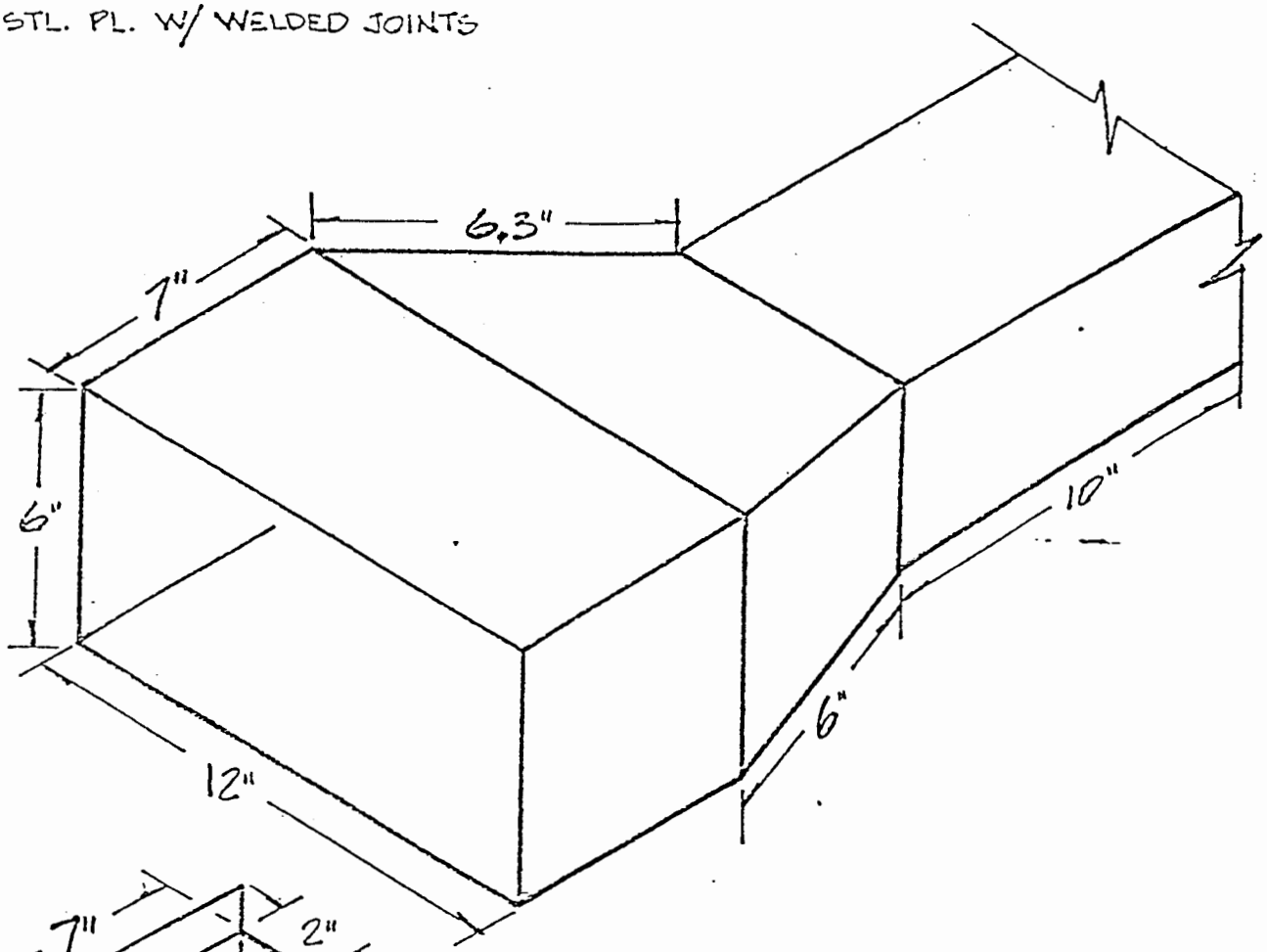

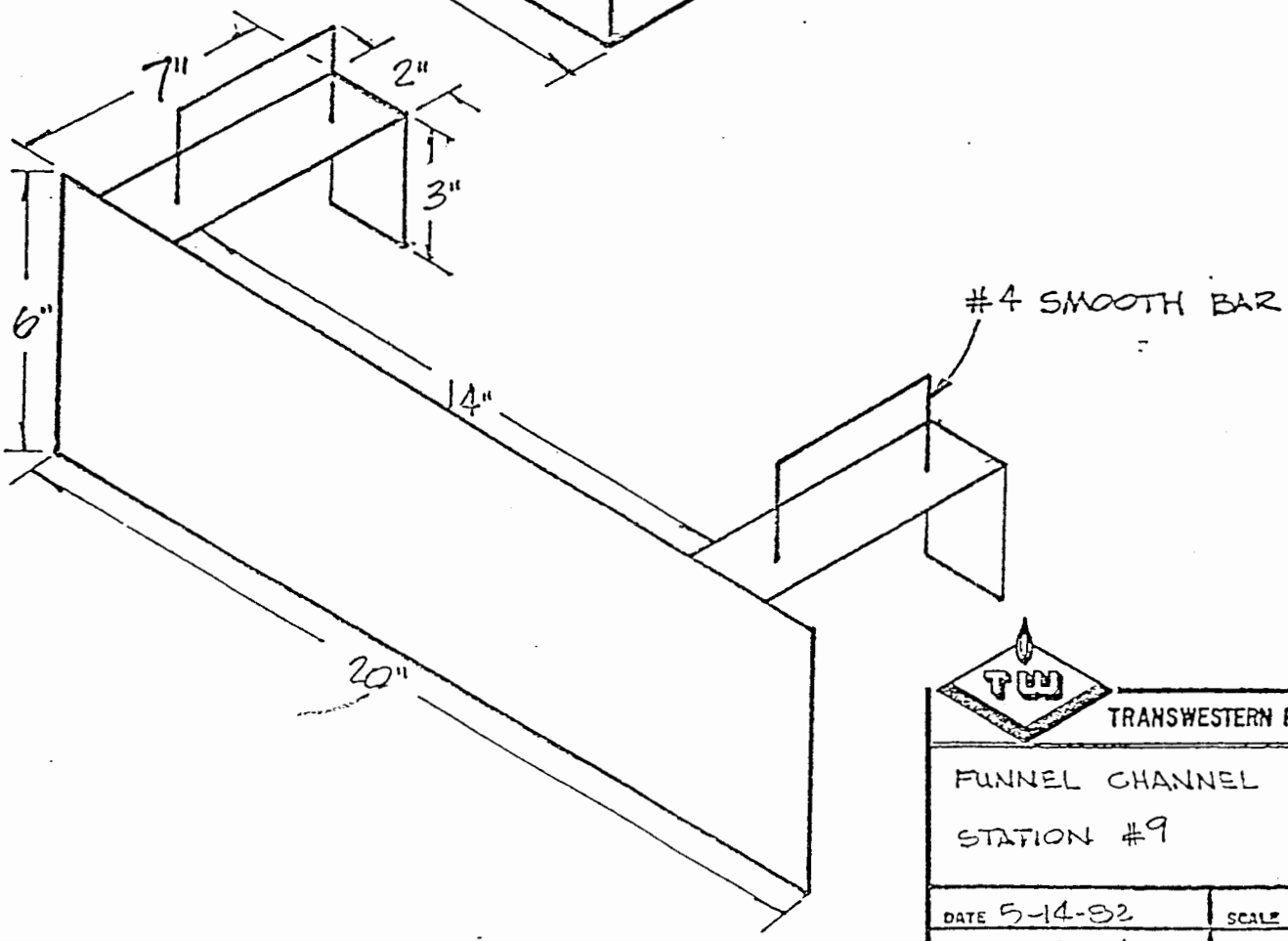

TW TRANSWESTERN PIPELINE COMPANY

FUNNEL CHANNEL W/ COVER

STATION #9

DATE 5-14-82	SCALE NONE
DRAWN BY SCW	APPROVED

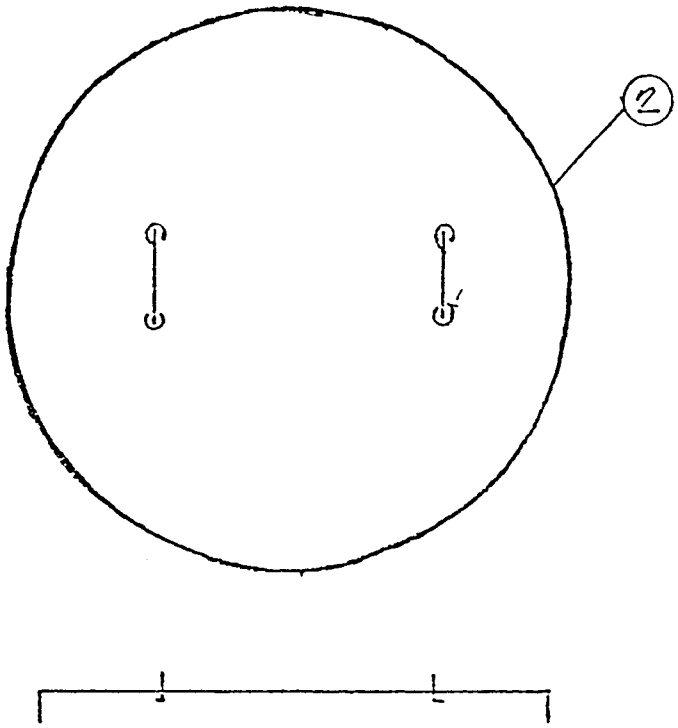

SHOP FAB.

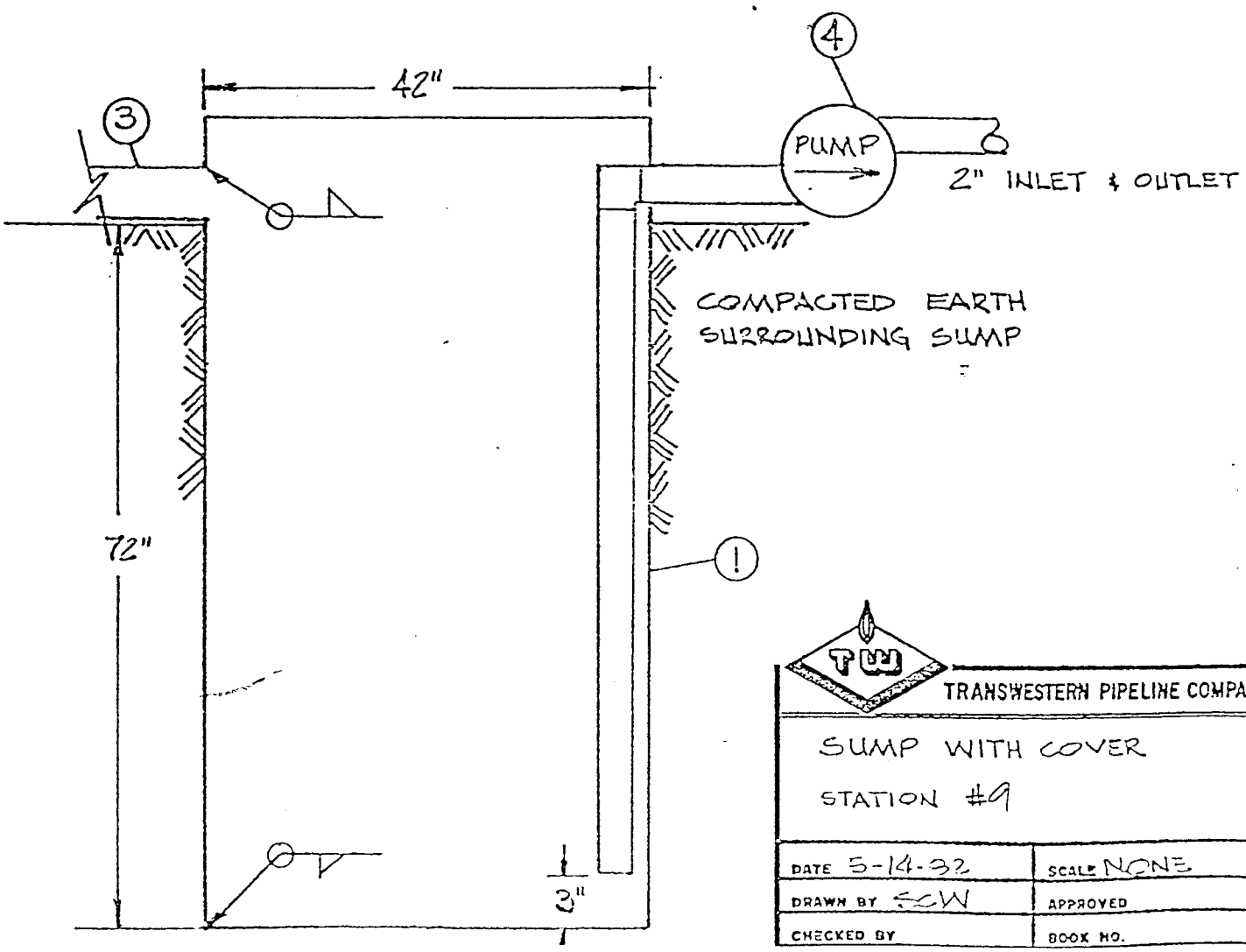

TRANSWESTERN PIPELINE COMPAN

SUMP WITH COVER

STATION #9

DATE 5-14-82	SCALE NONE
DRAWN BY SCW	APPROVED
CHECKED BY	BOOK NO.

*SHOP FABRICATED FOR FIELD FIT

BILL OF MATERIAL

Manufacturer to mark ALL EQUIPMENT as listed below, using both numbers, as example 46-1, 46-2, etc. SHEET C-8

No. Reqd.	Size	Description	Item No.	Re
1	10 BBL.	Sump, used steel pipe, 42" O.D. x 0.500 W.T., 84" high with 72" below grade, 1/4" steel plate bottom, inlet opening: welded to part 'C' on funnel channel (4" H x 6"W x 10"L welded together), outlet opening: to fit 2.375" pipe	1	Shop Fab.
1	43" Dia.	Cover, 1/4" steel plate, 1" welded edge, #4 smooth bar handles	2	Shop Fab.
1 *	See Drawing	Funnel channel with cover, 1/4" steel plate, welded joints.	3	Shop Fab.
		Part A: Top & bottom 7" x 12"		
		Sides 6" x 7"		
		Part B: Moving Clockwise		
		Slanted top 12" x 6.3" x 6" x 6.3"		
		Flat bottom 12" x 6" x 6" x 6"		
		Sides 6" x 6.3" x 4" x 6"		
		Part C: Top & bottom 6" x 10"		
		Sides 4" x 10"		
		Part D: Front 6" x 20"		
		Straps 2" x 7" & 2" x 3"		
		Handles Bent #4 Smooth Bar		
1	2"	Pump, Double-Diaphragm	4	

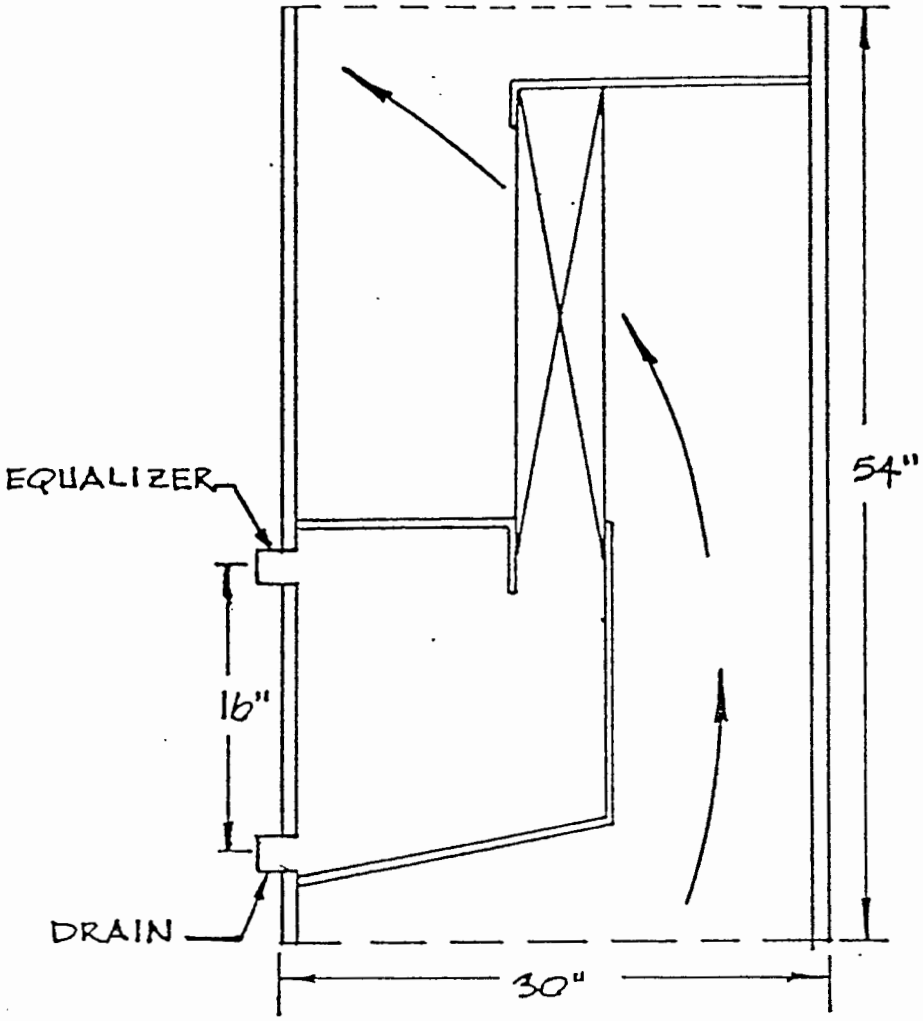

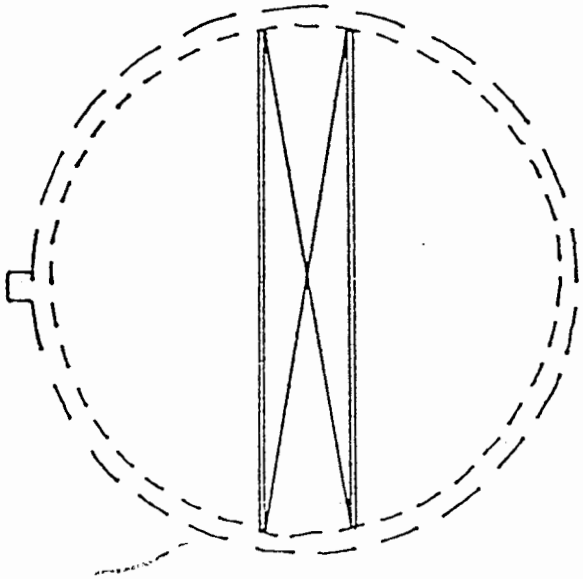

PER BEAL EQUIP. CO.

TRANSWESTERN PIPELINE COMPAN

STATION 9

MIST EXTRACTOR

DATE 3-10-82	SCALE NONE
DRAWN BY SCH	APPROVED
CHECKED BY	BOOK NO.

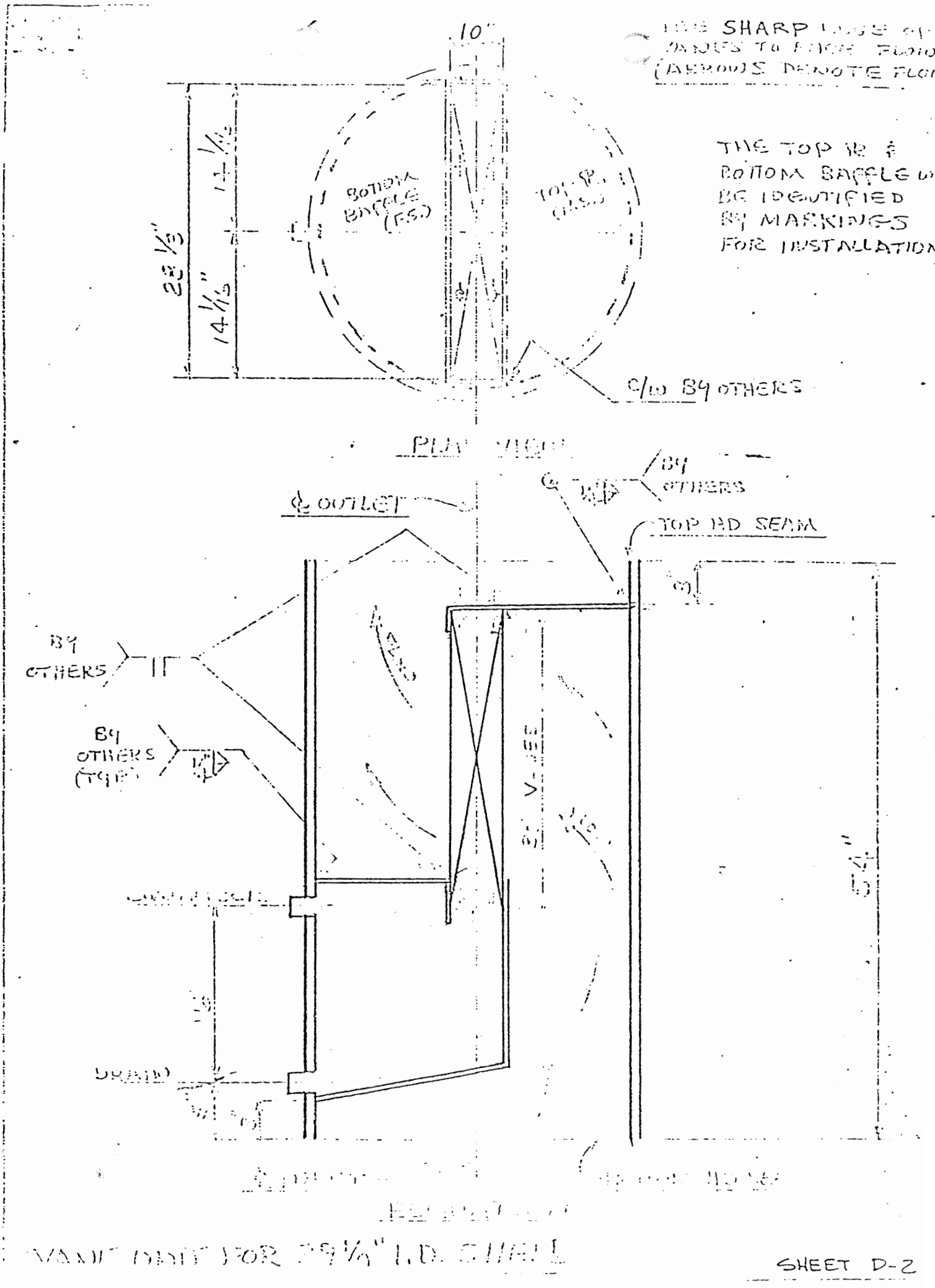
10"
THE SHARP EDGE OF
VANES TO FACE FLOW
(ARROWS DENOTE FLOW
THE TOP AND
BOTTOM BAFFLE
BE IDENTIFIED
BY MARKINGS
FOR INSTALLATION
BOTTOM BAFFLE (FS)
TOP BAFFLE (FS)
28 1/2"
14 1/2"
C/W BY OTHERS
PLAN VIEW
BY OTHERS
℄ OUTLET
TOP HD SEAM
BY OTHERS
BY OTHERS (TYP)
DRAIN
VANE DATA FOR 29 1/4" I.D. SHELL

SHEET D-2

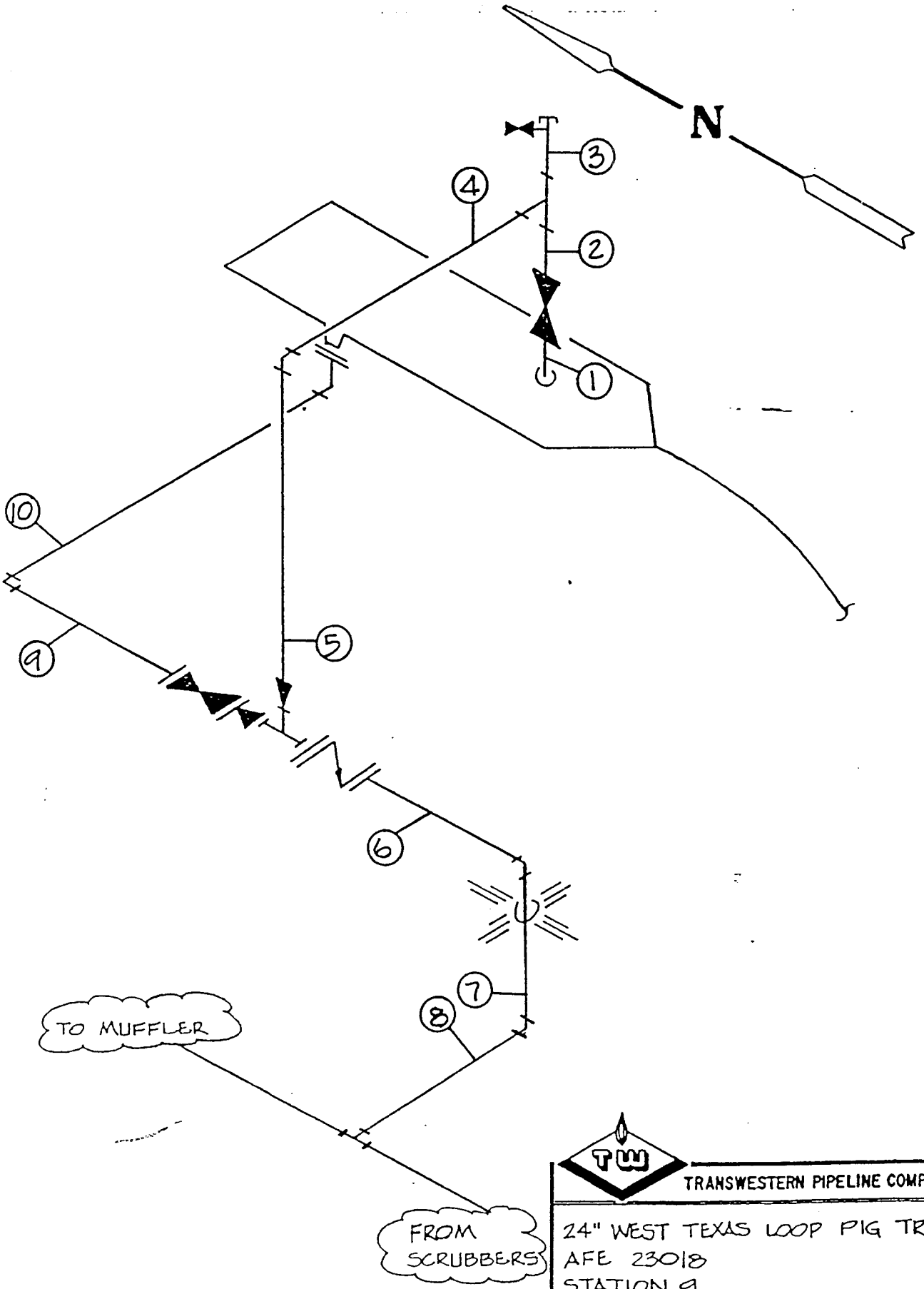

TRANSWESTERN PIPELINE COMPANY

24" WEST TEXAS LOOP PIG TRAP
AFE 23018
STATION 9

DATE	SCALE

MUFFLER
E1+74
N11+28'-6"
E0+63'-6"
E0+97'-0"
E1+30'-6"
N10+63'-6"
N10+33'-0"
N10+02'-6"
2"Φ
500 BBL TANK
E1+05'-6"
N9+47
AS PER AFE 22746
E1+63
E1+95
WASH RACK
N10+14
N9+84
4"Φ
E1+78
2"Φ
E2+22
SUMP
N9+35
WEST TEXAS LAT.
E2+11
E2+36
WEST TEXAS LOOP
E1+11
PANHANDLE
N7+13
N
TRANSWESTERN PIPELINE COMPANY
PIPELINE LIQUID WASTE PROJECT
AFE 23018
STATION 9
DATE
SCALE
DRAWN BY
APPROVED

Form 307 PL (Rev. 12-75)

TEXAS EASTERN TRANSMISSION CORPORATION

OPERATING DEPARTMENT

MAINTENANCE JOB COMPLETION REPORT

Eastern ☐
Western ☒

Field Office District III Roswell, N.M. Date of Report 11-18-83 Maintenance Job No. 3-83-24

Title: Re-route Auxiliary Building & Main Engine Room Building Roof Drains & Install New Roof Coating on Auxiliary & Main Engine Room Building Roofs

Location: Compressor Station No. 9 - Roswell, New Mexico

Date Started 10-25-83 Date Completed 11-9-83

Performed by: Jack Whisler, Inc.

Remarks:

Inventory by: Frank Smith Date 11-18-83

Drawing Nos.: To Be Sent Later

NOTE: Attach drawings with bill of material showing removals, installations, relocations and other alterations as approved under this job number.

Signed: Francis M. Cox *F M Cox*
Supervisor

Signed: L. G. Langston *L G Langston*
Manager

Distribution: Orig. Alan Bond
A.B. Jarnagin
Larry Langston
John Kotarski
Lowell Davina
Francis Cox

ORIGINAL MAILED
DEC - 6 1983
TO HOUSTON OFFICE

Form 306 PL (Rev. 12-75)

TEXAS EASTERN TRANSMISSION CORPORATION

OPERATING DEPARTMENT

MAINTENANCE JOB

Eastern ☐
Western XX

Field Office District III - Roswell, New Mexico Maintenance Job No. 3-83-24

Title: Re-route Auxiliary Building & Main Engine Room Building Roof Drains & Install New Roof Coating on Auxiliary & Main Engine Room Building Roofs

Location: Compressor Station No. 9 - Roswell, New Mexico

Description of Work (Including "Purpose and Necessity"): Re-route existing roof drains from the sump tanks in the auxiliary building & the main engine room building and downspout to the ground to prevent rain water from being pumped into the 500 bbl. waste storage tank. New downspouts to be 4" dia., Sch. 80, PVC pipe on the auxiliary building & 6" dia., Sch. 80, PVC pipe on the engine room building. Install concrete curb to prevent water from spilling against existing equipment & piping. Apply new roof coating to the auxiliary building roof & the main engine room building roof to repair existing leaks.

Estimated Starting Date Oct. 15, 1983 Estimated Completion Date Nov. 15, 1983

Estimated Costs: Material $ _____ Co. Installation $ _____

Contract Services and Rental Equipment $ 9,700.00 Total $ 9,700.00

Budgeted: Yes ☐ No ☒ Budget Estimate $ -0-

Drawing Number N/A

Requested by: Francis M. Cox Date 10-10-83

Approved: R. H. Langston Manager Date 10-17-83

Approved: _____ Date _____

Authorized: _____ Date _____

Remarks: Request a "DMJ" Number for the above mentioned work.

In 1983 Budget: No

Distribution: Orig. / Larry Langston ✓
A B Jarnagin
Francis Cox
Lowell Davina

NOTE: A sketch shall be submitted with this request whenever a change of design or specifications is involved.

1204
Rev. 3-81

TEXAS EASTERN TRANSMISSION CORPORATION AND SUBSIDIARIES

COMPLETION REPORT

E. E. No. T-81-109
Prelim. Ref. No. 567-544
Docket/Proj. No. NONE
Code No.

Transwestern Pipeline Company
Company Name

Gas Western 10/14/80-05
Profit or Cost Center

AFE No. 22419
Company No. 09

[X] Property Addition	[ ] Preliminary Investigation	[ ] Research & Development	[ ] Other Work	[ ] Property Retirement	[ ] Other (Specify)

TITLE Install Waste Oil Storage Tank — Roswell Manager

LOCATION Compressor Station No. 9 - Roswell, N.M. G.P.L.Loc 30-1-7991 — District III

Date Started 9-26-81 Date in Service 6-18-82 Date Completed 6-18-82

Related AFE No. None

Drawings Attached NOTE: TO BE SENT AT A LATER DATE (ED)

Other Ref. Svg's (Not Attached) N/A

MATERIAL OR RECEIVING REPORTS ISSUED

See TW-112

REMARKS:

ORIGINAL MAILED
JUL 26 1982
TO HOUSTON OFFICE

ENGINEERING SERVICES		OPERATIONS	
Prepared by:	Date:	Prepared by: Frank Smith (Frank Smith)	Date: 6-25-82
Verified by:	Date:	Verified by: Francis H. Cox	Date: 6-25-82
Manager Plant Records	Date:	Approved by:	Date: 7-23-82
Manager Materials Management	Date:	Approved by:	Date:
Chief Engineer Administration	Date:	Approved by:	Date:

TEXAS EASTERN
OR SUBSIDIARIES
INVOICE IN TRIPLICATE TO:

TRANSWESTERN PIPELINE CO.
ACCOUNTING DEPARTMENT
P.O. BOX 2521
HOUSTON, TEXAS 77001

SHIP TO: 09-30-00
TRANSWESTERN PIPELINE COMPANY
P.O. BOX 2018
HWY 285 NORTH
ROSWELL, NEW MEXICO 88201
CARE OF: FRANCIS COX

VENDOR: 243900
GOOCH TANK & MANUFACTURING CO.
P.O. BOX 133
TATUM, NM 88267

PURCHASE ORDER

NO. 09-007517 0

THIS PURCHASE ORDER NUMBER MUST BE SHOWN ON INVOICE, TAG, BOX, BILL OF LADING OR EXPRESS RECEIPT

DATE OF ORDER	DATE REQUIRED
04-16-81	05-15-81

STATE SALES/USE TAX INSTRUCTIONS
[X] TAXABLE-STATE OF NM
[ ] TAX EXEMPT-SEE NOTE BELOW
[ ] SERVICES-NONTAXABLE

SHIP PREPAID AND [ ] ADD [X] ALLOW VIA VENDOR
F.O.B. DESTINATION
TERMS NET 30

A.F.E. NO. | PROJECT DESCRIPTION | PROJECT NO. | JOB NO. | M&S ACCT.

PO ITEM	BM ITEM	CATALOG NO.	QUAN. REC'D	QUANTITY	UNIT	DESCRIPTION	UNIT PRICE	SCHEDULED SHIPPING DATE	PRI NO
01			2	3	EA	TANK, - 10 FT. DIA. X 16 FT. HIGH, 1/4" STEEL PLATE BOTTOM, 3/16" STEEL SIDE WALLS AND TOP DECK COMPLETE WITH STANDARD CONNECTIONS. ONE (1) TANK EACH TO BE DELIVERED TO STATION NO. 8, STATION NO. 9 AND STATION NO. UT-1 CHARGE AS FOLLOWS: 1 EA - 567 9 107-8 224-1-5 49 12-9 5-41 1 EA - 567 9 107-8 224-1-2 49 12-9 5-41 1 EA - 567 9 107-8 224-1-9 49 Z12-9 5-41	2614.00	05-07-81	1

REQUISITION NO. 9-81-22415-1
REQUESTED BY FRANCIS M. COX
BUYER JS
TYPIST NA
TRANSPORTATION RECEIPT VIA VENDORS DELIVERY NO. DATE 6-2-81

INTENDED USE OF MATERIAL
STORAGE OF WASTE OIL FOR RECLAIMING AT STA NO. 8, 9 AND UT-1

COPY NO. 8
FIELD OFFICER FILE

ACCOUNT NUMBER: ORGN. UNIT	DIV.	GENERAL	MAJOR	MINOR	COST ELEM.	DEBIT	CREDIT

IF NO EXCEPTIONS SO INDICATE: NONE

AMOUNT PREPAID [ ] COLLECT [ ]
IF COLLECT, HOW PAID

RECEIVED BY J.R. RUSSELL DATE 6-2-81
APPROVALS DATE

Form No. 1135

Texas Eastern Transmission Corporation and Subsidiaries

AUTHORIZATION FOR EXPENDITURES

E. E. No. T-81-109 | Transwestern Pipeline Company | AFE No. 22419

Prelim. Ref. No. 567-544 | Company Name

Docket/Proj. No. NONE | Company No. 09

Code No. | Gas Western 10/14/80-05

Profit or Cost Center and Appropriation Reference No.

☒ Property Addition	☐ Preliminary Investigation	☐ Research & Development	☐ Other Work	☐ Advances For Gas	☐ Property Retirement	☐ Other (Specify)

TITLE: Install Waste Oil Storage Tank — Roswell Operations

LOCATION: G. P. L. Loc. 30-1-7119
Compressor Station No. 9 - Roswell, New Mexico — District III

DESCRIPTION

Purchase and install 210 bbl. waste oil storage tank to include piping, pump and fittings for used oil for reclaiming purposes at Station No. 9 and field locations in District III.

FERC 1-12 ANALYSIS 04

Related A. F. E. Number: NONE

Budget "Job Report" Item No. 238 — OPERATIONS A. F. E.

PURPOSE & NECESSITY

Storage of waste oil for reclaiming purposes at Station 9 and field locations in District III.

TW-112, 1203 & 1204 to be completed by: Frank Smith

Work to Begin: 4/81

Work to be Completed: 5/81

Work to be Done by: ☐ Company Personnel ☒ Contractor

Material Costs	$ 12,500	A.S. NO. 49 *For Comptroller Division Use Only*	
Installation Costs	$ 7,500	Status of Appropriation:	
Sub Total	$ 20,000	Total Appropriation	$ 5,882,000
Deduct: Interest	$	Deduct: Previous AFE's	$ 1,357,630
		This AFE	$ 20,000
AUTHORIZED AMOUNT	$ 20,000	Remaining Appropriation	$ 4,504,370

Prepared by:	Date: 12/15/80		Date:
Verified by:	Date: 1-8-81	Tax Dept. Review by:	Date: 3-23-81
Engineering Approval:	Date: 2/24/81	Accounting Dept. Review by:	Date: 3-24-81
Group or Division Authorization:	Date: 3/19/81	Comptroller Division Approval:	Date: 3/25/81

Form No. 1135

Tex Eastern Transmission Corporation and Subsidiaries

AUTHORIZATION FOR EXPENDITURES

E. E. No. _____

Prelim. Ref. No. 567-544

Docket/Proj. No. _____

Code No. _____

Transwestern Pipeline Company
Company Name

AFE No. 22419

Company No. 09

Gas Western 10/14/80-05
Profit or Cost Center and Appropriation Reference No.

☒ Property Addition	☐ Preliminary Investigation	☐ Research & Development	☐ Other Work	☐ Advances For Gas	☐ Property Retirement	☐ Other (Specify)

TITLE Install Waste Oil Storage Tank — Roswell Operations

LOCATION Compressor Station No. 9 - Roswell, New Mexico — District III

DESCRIPTION

Purchase and install 210 bbl. waste oil storage tank to include piping, pump and fittings for used oil for reclaiming purposes at Station No. 9 and field locations in District III.,

Related A. F. E. Number — NONE

Budget "Job Report" Item No. 238 — OPERATIONS A. F. E.

PURPOSE & NECESSITY

Storage of waste oil for reclaiming purposes at Station 9 and field locations in District III.

TW-112, 1203 & 1204 to be completed by: Frank Smith

Work to Begin 4/81

Work to be Completed 5/81

Work to be Done by: ☐ Company Personnel ☒ Contractor

Material Costs	$ 15,000	*For Comptroller Division Use Only*	
Installation Costs	$ 5,000	Status of Appropriation:	
Sub Total	$ 20,000	Total Appropriation	$
Deduct: Interest	$	Deduct: Previous AFE's	$
		This AFE	$
AUTHORIZED AMOUNT	$ 20,000	Remaining Appropriation	$

Prepared by:	Date: 12/15/80		Date:
Verified by:	Date: 1-8-81	Tax Dept. Review by:	Date:
Engineering Approval:	Date:	Accounting Dept. Review by:	Date:
Group or Division Authorization:	Date:	Comptroller Division Approval:	Date:

ORIGINAL MAILED
JAN - 9 1980
TO HOUSTON OFFICE

Attachment F

Assessment and Clean-up Process Under NMED HRMB Oversight

--NOTE: This document was prepared and submitted to TW by the NMED HRMB--

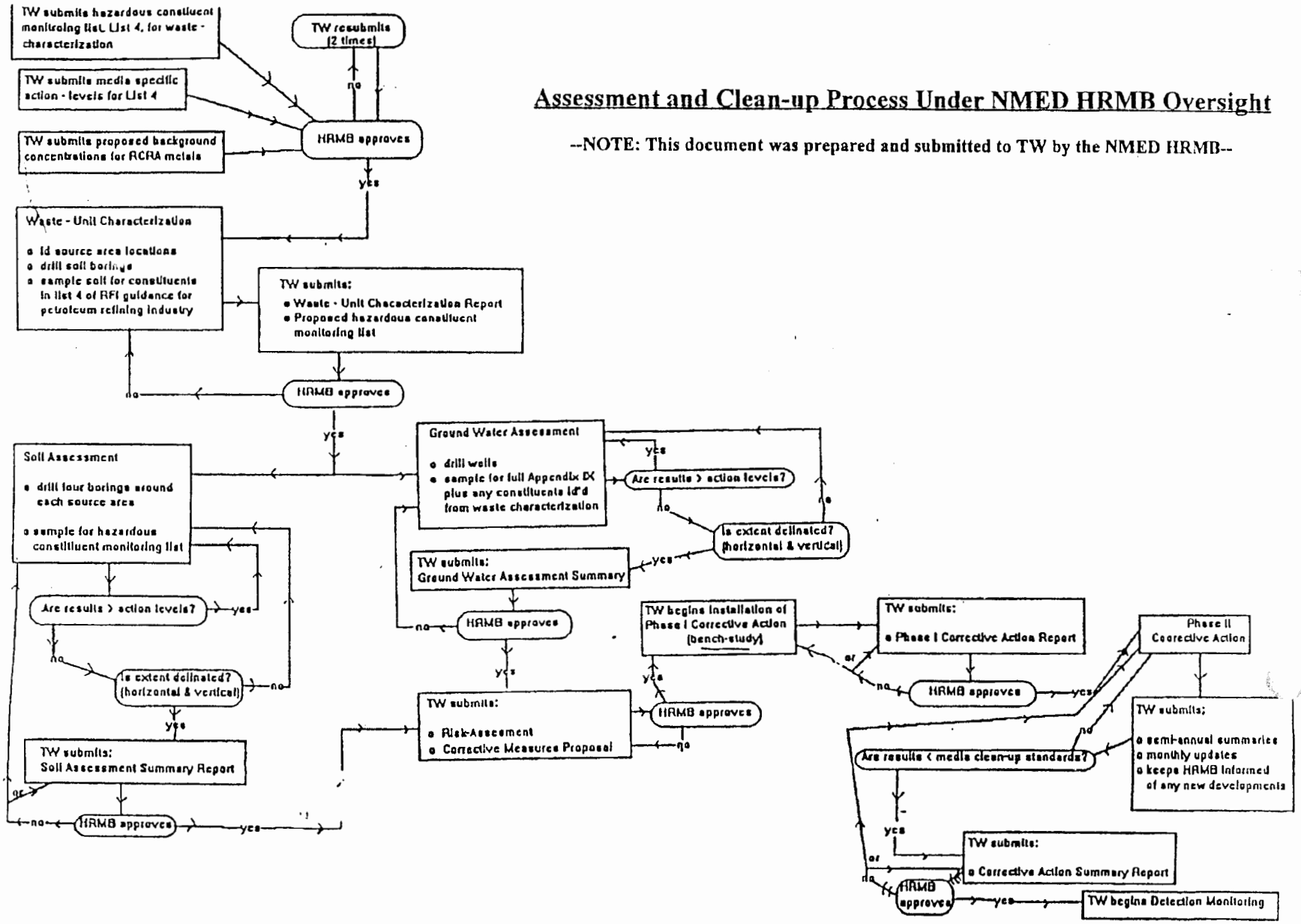

Assessm[illegible] and Clean-up Process Under NM[illegible]CD Oversight

--NOTE: This document does not represent an approved N[illegible]OCD process--

Progression of Major Milestones		Comments/Notes
TW prepares and submits a Phase I soil & ground water assessment plan to the NMOCD		Plan submitted to the NMOCD on July 26, 1995. Plan included: 1. Waste characterization - four soil borings to 15 ft. bgs, two borings in each of the two known former surface impoundments 2. Three ground water monitor wells downgradient of the former impoundments
NMOCD approves Phase I plan with specified conditions	NMOCD & TW resolve any questions and/or differences via telephone discussions	
TW implements the Phase I plan		Plan approved August 11, 1995
TW prepares and submits a Phase I assessment report and a Phase II plan to the NMOCD		Field activities implemented August 15-23, 1995
NMOCD approves Phase II plan with specified conditions	NMOCD & TW resolve any questions and/or differences via telephone discussions	Report due to NMOCD by October 27, 1995. The Phase II plan will include provisions to establish the lateral and vertical extent of soil and ground water contamination. The plan will also include provisions for an SVE pilot test.
TW implements the Phase II plan		Projected implementation date of November 15, 1995 with field activities complete by December 15, 1995.
TW prepares and submits a Phase II assessment report, a Phase III assessment plan (if necessary), and a corrective action plan to the NMOCD		Projected completion date of March 31, 1996. Additional assessment activities to include an evaluation of the deeper aquifer.
NMOCD approves the Phase III & corrective action plan with specified conditions	NMOCD & TW resolve any questions and/or differences via telephone discussions	
TW concurrently implements the corrective action plan and any additional assessment activities such as evaluation of deeper aquifers	TW submits semi-annual progress reports to the NMOCD	Projected implementation date of June 30, 1996.
TW prepares and submits a confirmation soil sampling plan to the NMOCD		Projected completion date for remediation of impacted soil is June 30, 1998. Clean-up criteria will be based on NMOCD guidelines for closure of surface impoundments.
NMOCD approves the confirmation soil sampling plan with specified conditions	NMOCD & TW resolve any questions and/or differences via telephone discussions	
TW implements the confirmation soil sampling plan		
TW prepares and submits a confirmation soil sampling report to the NMOCD		In the event soil contaminants remain above NMOCD guidelines, TW will either continue SVE operations, implement additional remediation measures, and/or propose final closure based on risk assessment.
NMOCD approves the confirmation soil sampling report	NMOCD & TW resolve any questions and/or concerns regarding performance standards prior to submitting the final progress report	
TW prepares and submits a final progress report for ground water remediation activities to the NMOCD		In the event ground water contaminants remain above NMWQCC standards, TW will either continue existing clean-up operations, implement additional remediation measures, and/or propose final closure based on risk assessment.
NMOCD approves the final progress report for ground water remediation activities		

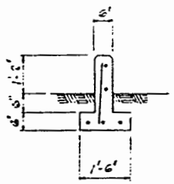

SECTION 'A-A'
SCALE: 3/8"=1'-0"

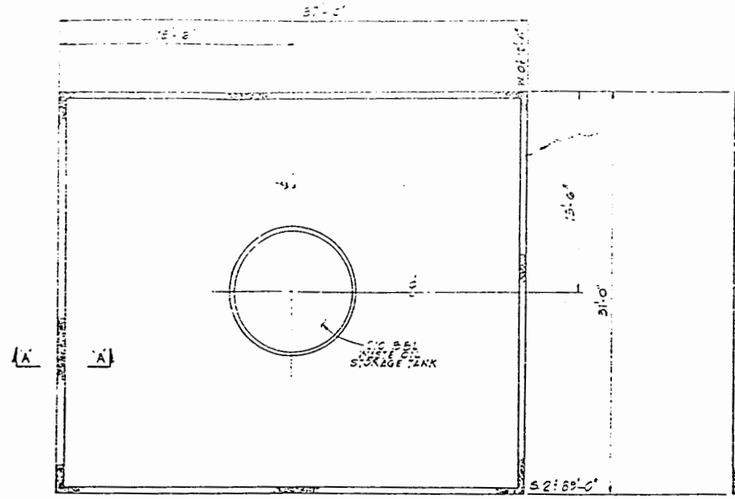

DIKE DETAILS
SCALE: 3/16"=1'-0"

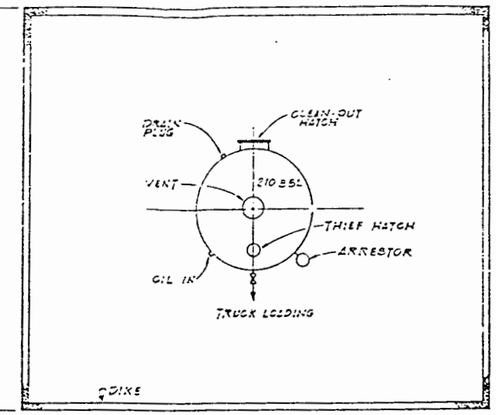

TANK DETAILS
SCALE: 3/16"=1'-0"

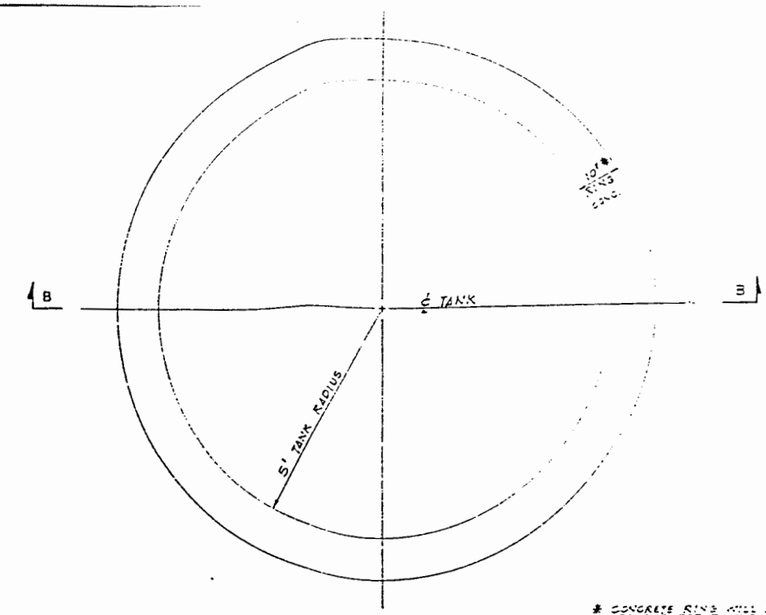

PLAN

* CONCRETE RING WILL BE 1'-0" WIDE FOR TANKS UP 5' RADIUS OR 10' DIA.
3000 PSI CONCRETE

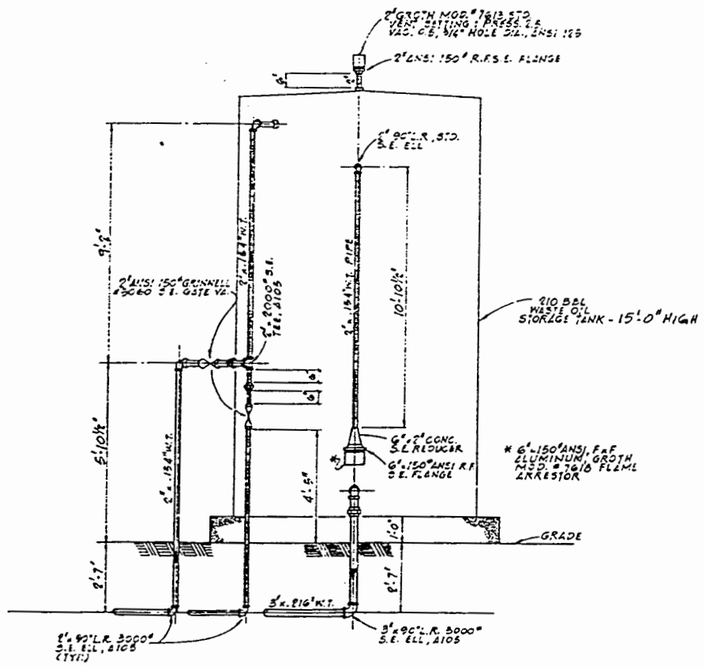

SECTION 'G-G'
SCALE: 3/8"=1'-0"

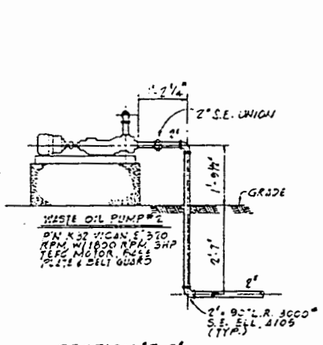

SECTION 'E-E'
SCALE: 1/2"=1'-0"

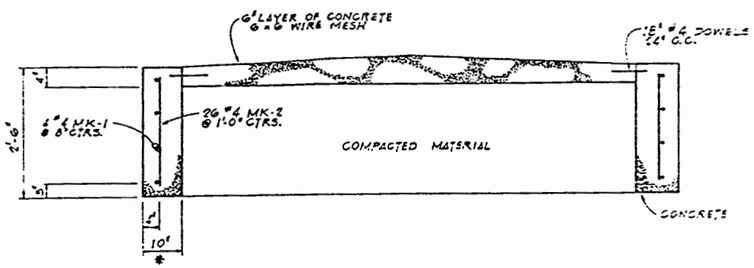

SECTION 'B-B'
SCALE: 3/8"=1'-0"

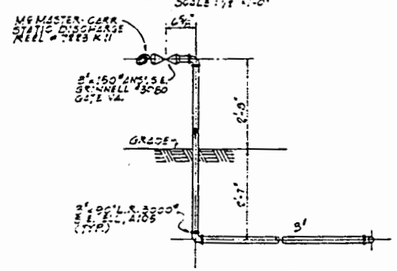

SECTION 'F-F'
SCALE: 1/2"=1'-0"

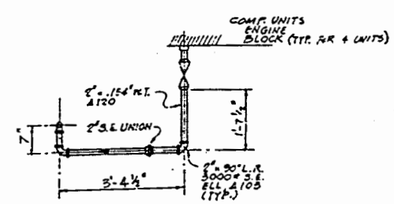

SECTION 'C-C'
SCALE: 1/2"=1'-0"

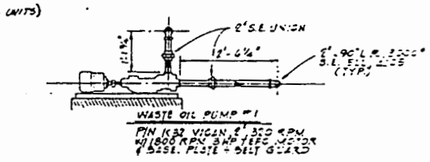

SECTION 'D-D'
SCALE: 1/2"=1'-0"

REV.	DATE	DESCRIPTION	DR. / CHK.	APR.

DWG. NO.	DESCRIPTION
9-AB-006	KEY PIPING PLAN
9-SB-A11-70	WASTE OIL STORAGE TANK - PLAN

REFERENCE DRAWINGS

TRANSWESTERN PIPELINE COMPANY

WASTE OIL STORAGE TANK
SECTIONS, TANK & DIKE DETAILS

STATION #9

SCALE NOTED		DATE	APE - 22419
DRAWN J.C. WILSON	2-15-93	JOB NO.	DRAWING NO.
CHECKED DM	2-15-93		9-AB-A11-71
APPROVED			
APPROVED	ENG.		