MONTGOMERY WATSON
Mining Group

November 10, 1998

(Via: FedEx)

New Mexico Environmental Department
Hazardous and Radioactive Materials Bureau
2044 Galisteo, P.O. Box 26110
Sante Fe, NM 87502

Attn: Cornelius Amindyas
Environmental Specialist, RCRA Permitting Program

Re: Revised Volumes I and III of the Part A and Part B Permit Application for the Triassic Park Waste Disposal Facility (Facility), Chaves County, New Mexico November 1998

Dear Mr. Amindyas:

On behalf of the Gandy-Marley Corporation, Montgomery Watson (MW) is pleased to submit revised Volumes I and III of the Part A and Part B Permit Application for the above referenced facility. In December 1997, Gandy-Marley submitted a Part A and Part B permit application to construct and operate a hazardous waste treatment, storage and disposal facility. The application was contained in a six-volume submittal.

As part of NMED's administrative review, we received comments on Volumes I and III. NMED requested that we incorporate the suggested changes and provide replacement volumes. Therefore, we have attached 3 copies of the replacement volumes (I and III). These volumes are dated *December 1997 - Revised November 1998.* We request that Volumes I and III originally submitted in December 1997 be returned to Montgomery Watson.

Furthermore, we understand that you have requested an additional copy of all Volumes (I through VI). This is being transmitted under separate cover.

If you have any questions, please contact us.

Sincerely,

Patrick Corser

Montgomery Watson
Patrick Corser, P.E.

cc: Dale Gandy /with attachments
Ken Schultz /with attachments
Trey Greenwood /with attachments
Jim Bonner /with attachments

W:/602/Correspondence/Cornelius Amindyas Coverletter
11/10/98 slw

P.O. Box 774018
1475 Pine Grove Road
Steamboat Springs, Colorado
30477

Tel 970 879 6260
Fax: 970 879 9048

PART A AND PART B PERMIT APPLICATION

FOR THE

TRIASSIC PARK HAZARDOUS WASTE FACILITY

Volume I

December 1997
Revised November 1998

Prepared By:

Stoller
established 1959

and

TerraMatrix
MONTGOMERY WATSON
Natural Resources Group

1475 Pine Grove Road
P.O. Box 774018
Steamboat Springs, Colorado 80477

Prepared for:

TRIASSIC PARK WASTE DISPOSAL FACILITY
Post Office Box 827
1109 E. Broadway
Tatum, New Mexico 88267

TRIASSIC PARK WASTE DISPOSAL FACILITY
CHAVES COUNTY, NEW MEXICO

December 1997
Revised November 1998

Prepared by:

THE S.M. STOLLER CORPORATION
1717 Louisiana Blvd., N.E., Suite 209
Albuquerque, New Mexico 87110
(505) 255-6200

and

DELHART
520 E. Harkness
Carlsbad, New Mexico 88220
(505) 885-1532

This submittal supersedes all previous information.

TABLE OF CONTENTS

Section No. **Page No.**

PART A

LIST OF ACRONYMS

CERTIFICATION OF PERMIT APPLICATION

EPA HAZARDOUS WASTE PERMIT APPLICATION

SAE FACILITY DRAWING

PART B

1.0 GENERAL FACILITY STANDARDS 1-1

1.1 GENERAL DESCRIPTION 1-1
1.1.1 Treatment 1-1
1.1.2 Tank Storage 1-2
1.1.3 Land Disposal 1-2
1.1.4 Facility Name 1-2
1.1.5 Facility Contact 1-3
1.1.6 Facility Address 1-3
1.1.7 Purpose of Facility 1-3
1.1.8 Facility Location 1-3
1.1.9 Hazardous Waste Generation 1-3
1.1.10 Sanitary Waste Generation 1-3
1.1.11 Nonhazardous Refuse Generation 1-3
1.2 SITE ENVIRONMENT AND CLIMATE 1-4
1.3 LOCATION INFORMATION 1-5
1.3.1 Flood Plain Information 1-5
1.3.2 Fire Control and Emergency Response 1-6
1.4 TRAFFIC PATTERNS 1-6
1.4.1 Traffic Control 1-6
1.4.2. Onsite Transportation Of Wastes 1-7
1.4.3 Routes 1-7
1.5 REMAINDER OF PERMIT APPLICATION 1-7

2.0 TREATMENT, STORAGE, AND DISPOSAL 2-1

2.1 FACILITY OVERVIEW 2-1
2.1.1 Facility Waste Acceptance 2-1
2.1.2 Waste Receiving 2-1
2.1.3 Waste Staging/Storage 2-2
2.1.4 Waste Treatment 2-2
2.1.5 Waste Disposal 2-2
2.2 CONTAINER STORAGE AREAS 2-3
2.2.1 Drum handling unit 2-3
2.2.1.1 Containment and Detection of Releases 2-3
2.2.1.2 Dimensions 2-4
2.2.1.3 Storage Limits 2-4
2.2.2 Roll-Off Storage Area 2-4

TABLE OF CONTENTS

Section No. **Page No.**

2.2.2.1 Containment and Detection of Releases 2-5
2.2.2.2 Dimensions 2-5
2.2.2.3 Storage Limits 2-6
2.2.3 Warning Signs *2-6*
2.2.4 Proper Waste Storage *2-6*
2.2.5 Ignitable/Reactive Wastes *2-6*
2.2.6 Precautions to Prevent Reactions *2-6*
2.2.7 Inspection Methods *2-7*
2.2.8 Types of Containers *2-7*
2.2.9 Labels *2-6*
2.2.10 Condition of Containers *2-7*
2.2.11 Compatibility with the Container *2-7*
2.2.12 Compatibility with Other Waste *2-7*
2.2.13 Aisle Space *2-9*
2.2.14 Record Keeping *2-8*
2.3 STORAGE IN TANKS 2-8
2.3.1 Containment and Detection of Releases *2-8*
2.3.2 Management of Incompatible Wastes *2-9*
2.3.3 Spill and Overfill Prevention *2-9*
2.3.4 Feed Mechanism, Pressure Controls, and Temperature Controls *2-9*
2.3.5 Management of Ignitable or Reactive Wastes *2-10*
2.3.6 Inspections *2-10*
2.3.7 Corrosion Protection *2-10*
2.3.8 Tank Assessments *2-10*
2.3.9 Ancillary Equipment *2-10*
2.3.10 Installation and Tightness Testing *2-10*
2.3.11 Repair and Certification of Tank Systems *2-10*
2.3.12 Transfer of Liquids from Liquid Waste Storage to the Stabilization Facility and to the Evaporation pond *2-11*
2.4 STABILIZATION 2-11
2.4.1 Contaminant and Detection Releases *2-12*
2.4.2 Management of Incompatible Wastes *2-12*
2.4.3 Spill and Overfill Prevention *2-12*
2.4.4 Feed Mechanism, Pressure Controls, and Temperature Controls *2-12*
2.4.5 Management of Ignitable or Reactive Waste *2-13*
2.4.6 Inspections *2-13*
2.4.7 Corrosion Protection *2-13*
2.4.8 Tank Assessments *2-13*
2.4.9 Ancillary Equipment *2-13*
2.4.10 Installation Inspection and Tightness Testing *2-13*
2.4.11 Repair and Certification of Tank Systems *2-14*
2.5 LANDFILL 2-14
2.5.1 Design of Landfill *2-14*
2.5.1.1 Nature and Quantity of Waste 2-14
2.5.1.2 Liner Systems 2-14
2.5.1.3 Leachate Collection and Removal System (LCRS) 2-15
2.5.1.4 Leak Detection and Removal System (LDRS) 2-16
2.5.1.5 Vadose Zone Monitoring System 2-16
2.5.1.6 Run-On/Run-Off Control 2-17
2.5.1.7 Wind Dispersal Control Procedures 2-17
2.5.1.8 Gas Generation Management 2-18
2.5.1.9 Cover Design 2-18
2.5.1.10 Landfill Location Description 2-18
2.5.2 Construction *2-19*
2.5.2.1 Site Preparation 2-19
2.5.2.2 Excavation and Preparation of Landfill Bottom and Subsurface Sides 2-19
2.5.2.3 Construction Quality Assurance Plan 2-19

TABLE OF CONTENTS

Section No. **Page No.**

2.5.3 Operation *2-20*
2.5.3.1 Inspections and Monitoring 2-20
2.5.3.2 Maintenance and Repairs 2-20
2.5.3.3 Warning Signs 2-20
2.5.3.4 Record Keeping 2-20
2.5.3.5 List of Hazardous Wastes to be Placed in Landfill 2-21
2.5.3.6 Specific Requirements for Ignitable/Reactive Wastes 2-21
2.5.3.7 Procedures for Protecting Wastes 2-21
2.5.3.8 Action Leakage Rate 2-22
2.5.3.9 Response Action Plan 2-22
2.5.3.10 Closure 2-24
2.6 TREATMENT IN EVAPORATION POND 2-24
2.6.1 Design of Evaporation pond *2-24*
2.6.1.1 Liner System 2-25
2.6.1.2 Leak Detection and Removal System/Vadose Monitoring System 2-26
2.6.1.3 Separator Berm System 2-27
2.6.1.4 Run-On/Run-Off Control 2-27
2.6.1.5 Evaporation pond Location Description 2-27
2.6.2 Construction *2-27*
2.6.2.1 Site Preparation 2-27
2.6.2.2 Excavation and Preparation of Evaporation pond Bottom and Subsurface Sides 2-28
2.6.2.3 Structural Fill Areas 2-28
2.6.2.4 Liner, LDRS, and Vadose System Installation 2-28
2.6.2.5 Construction Quality Assurance Plan 2-28
2.6.3 Nature and Quantity of Waste *2-28*
2.6.4 Operation of the Unit *2-28*
2.6.4.1 Waste Acceptance and Receiving 2-29
2.6.4.2 Placement of Wastewater into the Evaporation pond 2-29
2.6.4.3 Inspections, Monitoring, and Repairs 2-29
2.6.4.4 Specific Requirements for Ignitable, Reactive, and/or Incompatible Wastes 2-30
2.6.4.5 Warning Signs 2-30
2.6.4.6 Record Keeping 2-30
2.6.4.7 Action Leakage Rate 2-30
2.6.4.8 Response Action Plan 2-30
2.6.4.9 Closure 2-30

3.0 GROUND PROTECTION 3-1

3.1 GEOGRAPHICAL SETTING AND TOPOGRAPHY 3-1
3.1.1 Physiographic Setting *3-2*
3.1.2 Topography *3-2*
3.2 CLIMATE 3-2
3.2.1 Temperatures *3-2*
3.2.2 Precipitation *3-3*
3.2.3 Wind *3-3*
3.3 SOILS AND LAND USE 3-3
3.3.1 Soil Profiles *3-3*
3.3.1.1 Roswell-Faskin-Jalmar Association 3-3
3.3.1.2 Alama Series 3-4
3.3.2 Land Ownership and Use *3-4*
3.4 GEOLOGY 3-4
3.4.1 Regional Geology *3-4*
3.4.1.1 Regional Stratigraphy 3-4
3.4.1.2 Regional Structure 3-7
3.4.2 Site Geology *3-8*
3.4.2.1 Site Stratigraphy 3-8
3.4.2.2 Site Structure 3-10
3.4.3 Site Investigation Activities *3-10*
3.4.3.1 Preliminary Evaluation Activities 3-10
3.4.3.2 1994 Site Characterization Activities 3-11

TABLE OF CONTENTS

Section No. **Page No.**

3.4.3.3 1995 Confirmation Drilling Program 3-12
3.5 SURFACE WATER AND WATER BALANCE 3-12
3.5.1 Surface Water 3-12
3.5.2 Water Balance 3-13
3.6 GROUNDWATER 3-14
3.6.1 Regional Aquifers 3-14
3.6.1.1 Ogallala Aquifer 3-14
3.6.1.2 Triassic 3-14
3.6.2 Site Groundwater 3-15
3.6.2.1 Ogallala Aquifer 3-15
3.6.2.2 Upper Dockum - "Uppermost Aquifer" 3-15
3.6.2.3 Lower Dockum Aquifer 3-17
3.6.3 Contaminant Transport Modeling 3-18
3.6.3.1 Saturated Flow Modeling 3-18
3.6.3.2 Unsaturated Flow Modeling 3-21
3.7 GROUNDWATER PROTECTION REQUIREMENTS 3-25
3.7.1 General Monitoring Requirements 3-25
3.7.2 Vadose Zone Monitoring Requirements 3-31
3.8 SUMMARY AND CONCLUSIONS 3-31

4.0 WASTE ANALYSIS PLAN 4-1

4.1 REGULATORY REQUIREMENTS 4-1
4.2 DESCRIPTION OF WASTES GENERATED AND RECEIVED AT THE FACILITY 4-1
4.3 WASTE ACCEPTANCE PROGRAM 4-2
4.3.1 First-Time Waste Acceptance Criteria And Procedures For Off-Site Generated Waste 4-2
4.3.1.1 Pre-shipment Procedures 4-2
4.3.1.2 Procedures to Ensure Compliance with LDR Standards 4-3
4.3.2 Ongoing Waste Acceptance Procedures For Off-Site Generated Waste 4-4
4.3.2.1 Incoming Waste Shipment Procedures 4-4
4.3.2.2 Ongoing Complete Waste Analysis 4-6
4.3.3 Procedures For On-Site Generated Waste 4-7
4.4 WASTE TRACKING SYSTEM 4-7
4.5 SAMPLING METHODS 4-7
4.6 ANALYTICAL METHODS 4-7
4.7 QUALITY ASSURANCE/QUALITY CONTROL 4-8
4.8 RECORD KEEPING 4-11

5.0 PROCEDURES TO PREVENT HAZARDS 5-1

5.1 SECURITY PROCEDURES TO PREVENT HAZARDS 5-1
5.1.1 Barrier and Means to Control Entrance 5-1
5.1.2 Warning Signs 5-1
5.2 INSPECTION REQUIREMENTS 5-1
5.2.1 General Inspection Requirements 5-1
5.2.1.1 Inspection Checklist 5-2
5.2.1.2 Remedial Action 5-2
5.2.2 Landfill Inspection Requirements 5-2
5.2.3 Evaporation pond Inspection Requirements 5-3
5.2.4 Container Storage Area Inspection Requirements 5-4
5.2.5 Tank Inspection Requirements 5-4
5.2.6 Stabilization Unit Inspection Requirements 5-4
5.2.7 Security Equipment Inspection Requirements 5-5
5.2.8 Safety and Emergency Response Equipment Inspection Requirements 5-5
5.2.9 Loading and Unloading Area Inspection Requirements 5-5
5.3 PREPAREDNESS AND PREVENTION REQUIREMENTS 5-6
5.3.1 Internal Communications 5-6
5.3.2 External Communications 5-6
5.3.3 Emergency Equipment 5-6

TABLE OF CONTENTS

Section No. **Page No.**

5.3.4 Water for Fire Control *5-6*
5.3.5 Required Aisle Space *5-6*
5.3.6 Arrangements with Local Authorities *5-7*
5.4 PREVENTIVE PROCEDURES, STRUCTURES, AND EQUIPMENT 5-7
5.4.1 Loading, Unloading, and Waste Transfer Operations *5-7*
5.4.2 Run-Off and Run-On *5-9*
5.4.2.1 Tank Storage, Container Storage, and Treatment Areas 5-9
5.4.2.2 The Landfill and Evaporation pond 5-9
5.4.3 Wind Dispersal Control System *5-9*
5.4.4 Water Supply Protection *5-8*
5.4.5 Mitigation of Effects of Equipment Failure and Power Outages *5-9*
5.4.6 Prevention of Undue Exposure of Personnel to Hazardous Waste *5-9*
5.4.7 Special Requirements for Bulk and Containerized Liquids Disposed in Landfills *5-10*
5.4.8 Special Requirements to Limit Releases to the Atmosphere *5-10*
5.5 PRECAUTIONS TO PREVENT IGNITION OR REACTION OF IGNITABLE, REACTIVE, OR INCOMPATIBLE WASTES 5-10
5.5.1 General Requirements *5-11*
5.5.2 Requirements for the Landfill *5-11*
5.5.3 Incompatible Waste Handling *5-11*

6.0 CONTINGENCY PLAN 6-1

6.1 GENERAL RESPONSIBILITIES OF THE EMERGENCY COORDINATOR 6-1
6.2 CIRCUMSTANCES DICTATING IMPLEMENTATION OF THE PLAN 6-2
6.3 IMPLEMENTATION PROCEDURES 6-2
6.3.1 Discovery of Incident and Request for Assistance from Emergency Response Personnel *6-2*
6.3.1.1 Life-Threatening Situations 6-3
6.3.1.2 Non-Life Threatening Situations 6-4
6.3.2 Identification and Characterization of Released or Suspected Released Material *6-4*
6.3.3 Assessment of Hazard *6-4*
6.3.4 Off-Site Notification and Evacuation Criteria *6-5*
6.3.5 Response and Control Procedures *6-6*
6.3.5.1 Fire and/or Explosion Control Procedure 6-6
6.3.5.2 Spills, Leaks, or Other Releases Control Procedure 6-7
6.3.5.3 Evaporation pond Failure Control Procedure 6-9
6.3.5.4 Power or Equipment Failure Control Procedure 6-10
6.3.6 Measures to Prevent Recurrence or Spread *6-10*
6.3.7 Storage and Treatment of Released Hazardous Waste *6-11*
6.4 POST-IMPLEMENTATION PROCEDURES 6-11
6.4.1 Post-Emergency Equipment Maintenance *6-11*
6.4.2 Required Reports and Notification *6-11*
6.5 DOCUMENTS TO BE MAINTAINED ONSITE AS PART OF THE PERMIT 6-12
6.6 AMENDMENT OF CONTINGENCY PLAN 6-13

7.0 PERSONNEL TRAINING 7-1

7.1 JOB TITLES AND DUTIES 7-1
7.1.1 RCRA Training Officer *7-1*
7.1.2 Emergency Coordinator *7-2*
7.1.3 Waste Handlers *7-3*
7.1.4 Site Security Officers *7-4*
7.1.5 Laboratory Specialist *7-4*
7.1.6 Maintenance Personnel *7-5*
7.2 TRAINING CONTENT AND FREQUENCY 7-5
7.2.1 Training Program for Facility Personnel *7-5*
7.2.1.1 Classroom Training 7-5
7.2.1.2 Job-Specific Training 7-7
7.2.1.3 OSHA 40-Hour Training 7-7

TABLE OF CONTENTS

Section No. **Page No.**

7.2.2 Training for Visitors *7-8*
7.2.3 Training for Off site Emergency Response Organizations *7-8*
7.3 RECORD KEEPING 7-8
7.3.1 Job Titles, Descriptions, and Duties *7-8*
7.3.2 Training Documentation *7-9*
7.3.3 Other Documentation *7-9*

8.0 *CLOSURE AND POST-CLOSURE OF PERMITTED UNITS* 8-1

8.1 CLOSURE ACTIVITIES 8-1
8.1.1 Drum Handling Facility *8-1*
8.1.1.1 Removal of Inventory 8-1
8.1.1.2 Decontamination of Equipment and Dismantling of Building Structure 8-2
8.1.1.3 Dismantling of Concrete Floor and Secondary Containment 8-2
8.1.1.4 Soil Sampling 8-2
8.1.2 Evaporation Evaporation pond *8-3*
8.1.2.1 Removal of Liquid Waste 8-3
8.1.2.2 Removal and Solidification of Sludge 8-3
8.1.2.3 Removal and Disposal of Liner and Leachate Collection System 8-3
8.1.2.4 Soil Sampling 8-3
8.1.3 Liquid Waste Receiving and Storage Facility *8-4*
8.1.3.1 Removal of Inventory 8-4
8.1.3.2 Dismantling of Tanks, Equipment, and Concrete Secondary Containment Area 8-4
8.1.3.3 Soil Sampling 8-4
8.1.4 Stabilization Treatment Unit *8-4*
8.1.4.1 Removal of Inventory 8-5
8.1.4.2 Decontamination of Equipment and Dismantling of Building Structure 8-5
8.1.4.3 Dismantling of Tanks and Secondary Containment Area 8-5
8.1.4.4 Soil Sampling 8-5
8.1.5 Roll-Off Storage Area *8-5*
8.1.6 Landfill *8-5*
8.1.6.1 Landfill Cover 8-7
8.2 POST-CLOSURE ACTIVITIES 8-7
8.2.1 Security Systems *8-7*
8.2.2 Landfill Final Cover *8-7*
8.2.3 Perimeter Diversion Ditch *8-8*
8.2.4 Leachate Management System *8-8*
8.2.4.1 Leachate Collection System 8-8
8.2.4.2 On-site Treatment of Leachate 8-9
8.2.4.3 Leak Detection System 8-9
8.2.5 Vadose Zone Monitoring System *8-9*
8.2.5.1 Sampling and Analysis 8-9
8.2.5.2 Inspection and Maintenance 8-9
8.2.6 Recordkeeping *8-10*
8.2.7 Certification of Post-Closure *8-11*
8.2.8 Amendment of Plan *8-11*
8.2.9 Facility Post-Closure Contact *8-11*
8.3 CLOSURE PERFORMANCE STANDARD 8-11
8.4 CLOSURE SCHEDULE 8-11
8.5 CERTIFICATION OF CLOSURE 8-11
8.6 MODIFICATIONS TO THE PLAN 8-12
8.7 CLOSURE COST ESTIMATES 8-12
8.7.1 Closure Costs *8-12*
8.7.2 Post-Closure Costs *8-12*
8.8 FINANCIAL ASSURANCE 8-12
8.8.1 Financial Assurance for Closure *8-12*
8.8.2 Financial Assurance for Post-Closure Care *8-13*
8.8.3 Liability Requirements *8-13*

TABLE OF CONTENTS

Section No.		Page No.
9.0	WASTE MANAGEMENT	9-1
9.1	BRIEF HISTORY OF WM/P2 IN THE UNITED STATES	9-1
9.2	PURPOSE AND OBJECTIVES OF THE TRIASSIC PARK WASTE DISPOSAL FACILITY WASTE MINIMIZATION/POLLUTION PREVENTION PROGRAM	9-2
9.3	BENEFITS OF THE TRIASSIC PARK WASTE DISPOSAL FACILITY WASTE MINIMIZATION/POLLUTION	9-2
9.4	ELEMENTS AND GOALS OF THE TRIASSIC PARK WASTE DISPOSAL FACILITY WM/P2 PROGRAM	9-3
9.5	PROPOSED ELEMENTS OF THE TRIASSIC PARK WASTE DISPOSAL FACILITY WM/P2 PROGRAM PLAN	9-4
10.0	CORRECTIVE ACTION	10-1
11.0	*40 CFR 264 SUBPART AA & BB REGULATIONS*	11-1
11.1	40 CFR 264 SUBPART AA	11-1
11.2	40 CFR 264 SUBPART BB	11-1
11.2.1	*Equipment List*	*11-1*
11.2.2	*Equipment Controls*	*11-1*
11.2.3	*Equipment Marking*	*11-1*
11.2.4	*Leak Detection and Repair*	*11-2*
11.2.5	*Record Keeping and Reporting*	*11-2*
11.3	40 CFR 265 SUBPART CC	11-3
11.3.1	*Waste Determination*	*11-3*
11.3.2	*Applicability to Containers*	*11-3*
11.3.3	*Applicability to the Evaporation pond*	*11-3*
11.3.4	*Applicability to Tanks*	*11-4*
11.3.5	*Applicability to the Stabilization Process*	*11-4*
11.3.6	*Inspection and Monitoring*	*11-4*
11.3.7	*Recordkeeping and Reporting*	*11-4*
11.3.7.1	Recordkeeping	11-4
11.3.7.2	Reporting	11-4
11.4	OTHER APPLICABLE REGULATIONS	11-5
12.0	REFERENCES	12-1

LIST OF TABLES

Table No.	Description	Page No.
3-1	Temperatures at Roswell	3-28
3-2	Monthly and Annual Precipitation Summary for Roswell	3-28
3-3	Triassic Park HELP Model	3-29
3-4	Triassic Park HELP Model Result Summary	3-29
3-5	Input Parameters for Unsaturated Flow Modeling	3-30
4-1	Parameters Required on Generator Waste Profile	4-12
4-2	Analytical Methods for Fingerprint Samples	4-12
4-3	Sampling Methods	4-12
4-4	Some Parameters and Methods for Full Characterization	4-13
5-1	Triassic Park Waste Disposal Facility Inspection Schedule	5-12
8-1	Closure Cost Estimates and Closure-Generated Waste Volumes	8-15
8-2	Post-Closure Cost Estimates	8-17

LIST OF FIGURES

Figure No.	Description	Page No.
1-1	Land Ownership Map Within 4 Mile Radius	1-8
1-2	Index Map - Proposed Site	1-9
1-3	Residence Within 10 Mile Radius	1-10
2-1	Index Map Proposed Site	2-31
3-1	Index Map Proposed Site	3-31
3-2	Topography - South East New Mexico	3-32
3-3	Wind Rose - South East New Mexico	3-33
3-4	Stratigraphic Column	3-34
3-5	Triassic Basin - Paled Map	3-35
3-6	Triassic Basin Subsurface	3-36
3-7	Project Area	3-37
3-8	Seismic Activity - South East New Mexico	3-38
3-9	Surface Geology - Project Area	3-39
3-10	Stratigraphic Cross Section	3-40
3-11	Close-Spaced Drilling Pattern	3-41
3-12	Proposed Disposal Site	3-42
3-13	Cross Section 1995 Drill Holes	3-43
3-14	Total Drill Holes	3-44
3-15	Air Photo - South East New Mexico	3-45
3-16	Project Area	3-46
3-17	Drill Hole Locations	3-47
3-18	Upper Dockum Groundwater	3-48
3-19	Landfill Profile	3-49
3-20	Steady State Effect Saturation vs. Distance	3-50
3-21	Steady State Effect Conductivity vs. Distance	3-51
3-22	Steady State Effect Velocity vs. Distance	3-52
3-23	Steady State Effect Leakage vs. Distance	3-53
3-24	Steady State Effect Leakage vs. Lateral	3-54
4-1	Pre-Acceptance Procedure for First Time Waste	4-14
4-2	Incoming Waste Shipment Procedures	4-15
4-3	Sequence of Procedures Sets for Determining Reactivity Group	4-16
4-4	Reactivity Group Designation and Waste Compatibility Matrix	4-17
7-1	Facility RCRA Training Program	7-10
8-1	Closure Schedule	8-14

LIST OF APPENDICES

Appendix	Description
Volume II	
A	RCRA Permit Application Checklist
B	Oil Well Log
C	Lithology Logs

LIST OF APPENDICES

Appendix	Description
D	Geophysical Logs
E	Geotechnical Laboratory Results
F	Grain Size Analyses
G	Cross-Sections
H	Example Waste Profile Sheet
I	Example Inspection Sheet
J	Coordinating Agreement
K	List of Emergency Coordinators
L	Evacuation Plans
M	Location, Description, and Capabilities of Emergency Equipment

Volume III - Engineering Report

A	Drawings

Volume IV - Engineering Report

B	Construction Quality Assurance Plan
C	Construction Specifications

Volume V - Engineering Report

D	Laboratory Test Results
E	Engineering Calculations

Volume VI - Engineering Report

E	Engineering Calculations - Continued
F	Surface Water Control Plan
G	Landfill Action Leakage Rate and Response Action Plan

LIST OF ACRONYMS

ALR	action leakage rate
ASTM	American Society for Testing and Materials
BLM	Bureau of Land Management
C&D	construction and demolition
CFR	Code of Federal Regulations
CMS	Corrective Measures Study
CQA	construction quality assurance
DOT	U.S. Department of Transportation
EC	Emergency Coordinator
EPA	U.S. Environmental Protection Agency
GMI	Gandy Marley, Inc.
gpad	gallons per acre per day
HAS	health and safety
HDPE	high-density polyethylene
HELP	Hydrological Evaluation of Landfill Performance
HOC	halogenated organic compound
HRMB	Hazardous and Radioactive Materials Bureau
HSWA	Hazardous and Solid Waste Amendments
LCRS	leachate collection and removal system
LDR	Land Disposal Restrictions
LDRS	leak detection and removal system
MSDS	Material Safety Data Sheet
MSW	municipal solid waste
NMED	New Mexico Environment Department
NOAA	National Oceanic and Atmospheric Administration
NRC	National Response Center
OCD	Oil Conservation Division
OJT	on-the-job training
ONA	Outstanding Natural Area
OSHA	Occupational Safety and Health Administration
OVM	organic vapor meter
P2	Pollution Prevention
PA	public address
PCB	polychlorinated biphenyl
PMO	preventive maintenance order
PPE	personal protective equipment
ppm	parts per million
ppmw	parts per million by weight
QA/QC	quality assurance/quality control
RFA	RCRA Facility Assessment
RFI	RCRA Facility Investigation
RCRA	Resource Conservation and Recovery Act
SWMU	solid waste management unit
TCE	trichloroethylene
TCLP	Toxicity Characteristic Leaching Procedure
TDS	total dissolved solids
TOX	total organic halides
TSCA	Toxic Substances Control Act
USGS	U.S. Geological Survey
WM	Waste Minimization

Part A

Gandy Marley, Inc.
Triassic Park Waste Disposal Facility
Certification of Permit Application
December 1997 Submittal

I certify under penalty of law that this document and all attachments were prepared under my direction or supervision in accordance with a system designed to assure that qualified personnel properly gather and evaluate the information submitted. Based on my inquiry of the persons or persons who manage the system or those persons directly responsible for gathering the information, the information submitted is, to the best of my knowledge and belief, true, accurate, and complete. I am aware that there are significant penalties for submitting false information, including the possibility of fine and imprisonment for knowing violations.

Dale Gandy
Signature

12-12-97
Date

Please print or type with ELITE type (12 characters per inch) in the unshaded areas only

Form Approved, OMB No. 2050-0034 Expires 10/31/99
GSA No. 0248-EPA-OT

For EPA Regional Use Only	
Date Received Month Day Year	

EPA

United States Environmental Protection Agency
Washington, DC 20460

Hazardous Waste Permit Application Part A

(Read the Instructions before starting)

I. Installation's EPA ID Number *(Mark 'X' in the appropriate box)*

☐ A. First Part A Submission ☐ B. Part A Amendment #_____

C. Installation's EPA ID Number	D. Secondary ID Number *(If applicable)*
NM000100248 4	

II. Name of Facility

TRIASSIC PARK WASTE DISPOSAL

III. Facility Location *(Physical address not P.O. Box or Route Number)*

A. Street

US HWY 380

Street *(Continued)*

36 MILES W OF TATUM NM

City or Town	State	Zip Code
TATUM	NM	88267 –

County Code (If known)	County Name
	CHAVES

B. Land Type	C. Geographic Location		D. Facility Existence Date
(Enter code)	*LATITUDE (Degrees, minutes, & seconds)*	*LONGITUDE (Degrees, minutes & seconds)*	Month Day Year
P	33 22 000	103 51 000	1998

IV. Facility Mailing Address

Street or P.O. Box

1109 E BROADWAY

City or Town	State	Zip Code
TATUM	NM	88267 –

V. Facility Contact *(Person to be contacted regarding waste activities at facility)*

Name *(Last)*	*(First)*
GANDY	LARRY
Job Title	**Phone Number** *(Area Code and Number)*
VICE PRESIDENT	505 – 398 – 4960

VI. Facility Contact Address *(See Instructions)*

A. Contact Address Location	Mailing	Other	B. Street or P.O. Box
	X		

City or Town	State	Zip Code
		–

Please print or type with ELITE type (12 characters per inch) in the unshaded areas only

Form Approved, OMB No. 2050-0034 Expires 10/31/99
GSA No. 0248-EPA-OT

EPA I.D. Number *(Enter from page 1)*	Secondary ID Number *(Enter from page 1)*
N M 0 0 0 1 0 0 2 4 8 4	

XIV. Description of Hazardous Wastes

A. EPA HAZARDOUS WASTE NUMBER - *Enter the four-digit number from 40 CFR, Part 261 Subpart D of each listed hazardous waste you will handle. For hazardous wastes which are not listed in 40 CFR, Part 261 Subpart D, enter the four-digit number(s) from 40 CFR, Part 261 Subpart C that describes the characteristics and/or the toxic contaminants of those hazardous wastes.*

B. ESTIMATED ANNUAL QUANTITY - *For each listed waste entered in column A estimate the quantity of that waste that will be handled on an annual basis. For each characteristic or toxic contaminant entered in column A estimate the total annual quantity of all the non-listed waste(s) that will be handled which possess that characteristic or contaminant.*

C UNIT OF MEASURE - *For each quantity entered in column B enter the unit of measure code. Units of measure which must be used and the appropriate codes are:*

ENGLISH UNIT OF MEASURE	CODE	METRIC UNIT OF MEASURE	CODE
POUNDS	P	KILOGRAMS	K
TONS	T	METRIC TONS	M

If facility records use any other unit of measure for quantity, the units of measure must be converted into one of the required units of measure taking into account the appropriate density or specific gravity of the waste.

D. PROCESSES

1. PROCESS CODES:

For listed hazardous waste: For each listed hazardous waste entered in column A select the code(s) from the list of process codes contained in item XII A. on page 3 to indicate how the waste will be stored, treated, and/or disposed of at the facility.

For non-listed hazardous waste: For each characteristic or toxic contaminant entered in column A, select the code(s) from the list of process codes contained in item XII A. on page 3 to indicate all the processes that will be used to store, treat, and/ or dispose of all the non-listed hazardous wastes that possess that characteristic or toxic contaminant.

NOTE: THREE SPACES ARE PROVIDED FOR ENTERING PROCESS CODES. IF MORE ARE NEEDED:

1. *Enter the first two as described above.*
2. *Enter "000" in the extreme right box of item XIV-D(1).*
3. *Enter in the space provided on page 7, item XIV-E, the line number and the additional code(s).*

2. PROCESS DESCRIPTION: *If a code is not listed for a process that will be used, describe the process in the space provided on the form (D.(2)).*

NOTE: HAZARDOUS WASTES DESCRIBED BY MORE THAN ONE EPA HAZARDOUS WASTE NUMBER - Hazardous wastes that can be described by more than one EPA Hazardous Waste Number shall be described on the form as follows:

1. *Select one of the EPA Hazardous Waste Numbers and enter it in column A. On the same line complete columns B, C and D by estimating the total annual quantity of the waste and describing all the processes to be used to treat, store, and/or dispose of the waste.*
2. *In column A of the next line enter the other EPA Hazardous Waste Number that can be used to describe the waste. In column D(2) on that line enter "Included with above" and make no other entries on that line.*
3. *Repeat step 2 for each EPA Hazardous Waste Number that can be used to describe the hazardous waste.*

EXAMPLE FOR COMPLETING ITEM XIV (shown in line numbers X-1, X-2, X-3, and X-4 below) - A facility will treat and dispose of an estimated 900 pounds per year of chrome shavings from leather tanning and finishing operation. In addition, the facility will treat and dispose of three non-listed wastes. Two wastes are corrosive only and there will be an estimated 200 pounds per year of each waste. The other waste is corrosive and ignitable and there will be an estimated 100 pounds per year of that waste. Treatment will be in an incinerator and disposal will be in a landfill.

Line Number	A. EPA HAZARD WASTE NO. (Enter code)	B. ESTIMATED ANNUAL QUANTITY OF WASTE	C. UNIT OF MEASURE (Enter code)	D. PROCESS (1) PROCESS CODES (Enter)	D. PROCESS (2) PROCESS DESCRIPTION (If a code is not entered in D(1))
X 1	K 0 5 4	900	p	T 0 3 D 8 0	
X 2	D 0 0 2	400	P	T 0 3 D 8 0	
X 3	D 0 0 1	100	P	T 0 3 D 8 0	
X 4	D 0 0 2				Included With Above

Please print or type with ELITE type (12 characters per inch) in the unshaded areas only

Form Approved. OMB No. 2050-0034 Expires 12-31-91
GSA No. 0246-EPA-OT

EPA I.D. Number *(enter from page 1)*

Secondary ID Number *(enter from page 1)*

XIV. Description of Hazardous Waste *(continued)*

E. USE THIS SPACE TO LIST ADDITIONAL PROCESS CODES FROM ITEM D(1) ON PAGE 6.

Line Number	Additional Process Codes (enter)
1	S01 S02 T02

XV. Map

Attach to this application a topographic map of the area extending to at least one mile beyond property boundaries. The map must show the outline of the facility, the location of each of its existing and proposed intake and discharge structures, each of its hazardous waste treatment, storage, or disposal facilities, and each well where it injects fluids underground. Include all springs, rivers and other surface water bodies in this map area. See instructions for precise requirements.

XVI. Facility Drawing

All existing facilities must include a scale drawing of the facility (see instructions for more detail). NA

XVII. Photographs

All existing facilities must include photographs (aerial or ground-level) that clearly delineate all existing structures; existing storage, treatment and disposal areas; and sites of future storage, treatment or disposal areas (see instructions for more detail). NA

XVIII. Certification(s)

I certify under penalty of law that this document and all attachments were prepared under my direction or supervision in accordance with a system designed to assure that qualified personnel properly gather and evaluate the information submitted. Based on my inquiry of the person or persons who manage the system, or those persons directly responsible for gathering the information, the information submitted is, to be the best of my knowledge and belief, true, accurate, and complete. I am aware that there are significant penalties for submitting false information, including the possibility of fine and imprisonment for knowing violations.

Owner Signature	Date Signed
[illegible]	11-17-94
Name and Official Title *(type or print)*	
Operator Signature	Date Signed
Name and Official Title *(type or print)*	

XIX. Comments

Part XII - The only treatment occurring at the surface impoundment is evaporation. Therefore, a treatment design capacity is not applicable and we have shown a storage capacity.

Part XIV - Wastes that do not meet LDR treatment standards will be managed at one or more permitted units prior to land disposal.

Note: Mail completed form to the appropriate EPA Regional or State Office. (refer to instructions for more information)

EPA I.D. Number *(Enter from page 1)*	Secondary ID Number *(Enter from page 1)*
N M 0 0 0 1 0 0 2 4 8 4	

XV. Map

Attach to this application a topographic map, or other equivalent map, of the area extending to at least one mile beyond property boundaries. The map must show the outline of the facility, the location of each of its existing and proposed intake and discharge structures, each of its hazardous waste treatment, storage, or disposal facilities, and each well where it injects fluids underground. Include all springs, rivers and other surface water bodies in this map area. See instructions for precise requirements.

XVI. Facility Drawing

All existing facilities must include a scale drawing of the facility (See instructions for more detail).

XVII. Photographs

All existing facilities must include photographs (aerial or ground-level) that clearly delineate all existing structures; existing storage, treatment and disposal areas; and sites of future storage, treatment or disposal areas (see instructions for more detail).

XVIII. Certification(s)

I certify under penalty of law that this document and all attachments were prepared under my direction or supervision in accordance with a system designed to assure that qualified personnel properly gather and evaluate the information submitted. Based on my inquiry of the person or persons who manage the system, or those persons directly responsible for gathering the information, the information submitted is, to the best of my knowledge and belief, true, accurate, and complete. I am aware that there are significant penalties for submitting false information, including the possibility of fine and imprisonment for knowing violations.

Owner Signature	Date Signed
Name and Official Title (Type or print)	
Owner Signature	Date Signed
Name and Official Title (Type or print)	
Operator Signature	Date Signed
Name and Official Title (Type or print)	
Operator Signature	Date Signed
Name and Official Title (Type or print)	

XIX. Comments

PART XIV - WASTES THAT DO NOT MEET LDR TREATMENT STANDARDS WILL BE MANAGED AT ONE OR MORE PERMITTED UNITS PRIOR TO LAND DISPOSAL.

Note: Mail completed form to the appropriate EPA Regional or State Office. (Refer to instructions for more information)

*U.S. Government Printing Office: 1997 — 516-920/83546

Please print or type with ELITE type (12 characters per inch) in the unshaded areas only

Form Approved, OMB No. 2050-0034 Expires 10/31/99
GSA No. 0248-EPA-OT

EPA I.D. Number *(Enter from page 1)*: N M 0 0 0 1 0 0 2 4 8 4

Secondary ID Number *(Enter from page 1)*:

XI. Nature of Business *(Provide a brief description)*

TRIASSIC PARK WASTE DISPOSAL WILL ACCEPT RCRA HAZARDOUS WASTE AND TSCA PCB WASTE FROM OFF-SITE GENERATORS FOR TREATMENT AND PERMANENT DISPOSAL.

TEMPORARY ON-SITE STORAGE IN CONTAINERS AND TANKS IS PROVIDED PRIOR TO TREATMENT AND DISPOSAL.

XII. Process Codes and Design Capacities

A. **PROCESS CODE** - *Enter the code from the list of process codes below that best describes each process to be used at the facility. Thirteen lines are provided for entering codes. If more lines are needed, attach a separate sheet of paper with the additional information. For "other" processes (i.e., D99, S99, T04 and X99), describe the process (including its design capacity) in the space provided in Item XIII.*

B. **PROCESS DESIGN CAPACITY** - *For each code entered in column A, enter the capacity of the process.*
1. **AMOUNT** - *Enter the amount. In a case where design capacity is not applicable (such as in a closure/post-closure or enforcement action) enter the total amount of waste for that process.*
2. **UNIT OF MEASURE** - *For each amount entered in column B(1), enter the code from the list of unit measure codes below that describes the unit of measure used. Only the units of measure that are listed below should be used.*

C. **PROCESS TOTAL NUMBER OF UNITS** - *Enter the total number of units used with the corresponding process code.*

PROCESS CODE	PROCESS	APPROPRIATE UNITS OF MEASURE FOR PROCESS DESIGN CAPACITY
	Disposal:	
D79	Underground Injection	Gallons; Liters; Gallons Per Day; or Liters Per Day
D80	Landfill	Acre-feet or Hectare-meter
D81	Land Treatment	Acres or Hectares
D82	Ocean Disposal	Gallons Per Day or Liters Per Day
D83	Surface Impoundment	Gallons or Liters
D99	Other Storage	Any Unit of Measure Listed Below
	Storage:	
S01	Container (Barrel, Drum, Etc.)	Gallons or Liters
S02	Tank	Gallons or Liters
S03	Waste Pile	Cubic Yards or Cubic Meters
S04	Surface Impoundment	Gallons or Liters
S05	Drip Pad	Gallons or Liters
S06	Containment Building	Cubic Yards or Cubic Meters
S99	Other Disposal	Any Unit of Measure Listed Below
	Treatment:	
T01	Tank	Gallons Per Day or Liters Per Day
T02	Surface Impoundment	Gallons Per Day or Liters Per Day
T03	Incinerator	Short Tons Per Hour; Metric Tons Per Hour; Gallons Per Hour; Liters Per Hour; or Btu's Per Hour
T04	Other Treatment	Gallons Per Day; Liters Per Day; Pounds Per Hour; Short Tons Per Hour; Kilograms Per Hour; Metric Tons Per Day; Metric Tons Per Hour; Short Tons Per Day; or Btu's Per Hour
T80	Boiler	Gallons or Liters
T81	Cement Kiln	Gallons Per Day; Liters Per Day; Pounds Per Hour; Short Tons Per Hour; Kilograms Per Hour; Metric Tons Per Day; Metric Tons Per Hour; Short Tons Per Day; or Btu's Per Hour
T82	Lime Kiln	
T83	Aggregate Kiln	
T84	Phosphate Kiln	
T85	Coke Oven	
T86	Blast Furnace	
T87	Smelting, Melting, Or Refining Furnace	Gallons Per Day; Liters Per Day; Pounds Per Hour; Short Tons Per Hour; Kilograms Per Hour; Metric Tons Per Day; Metric Tons Per Hour; Short Tons Per Day; or Btu's Per Hour
T88	Titanium Dioxide Chloride Process Oxidation Reactor	
T89	Methane Reforming Furnace	
T90	Pulping Liquor Recovery Furnace	
T91	Combustion Device Used In The Recovery Of Sulfur Values From Spent Sulfuric Acid	
T92	Halogen Acid Furnaces	
T93	Other Industrial Furnaces Listed in 40 CFR §260.10	
T94	Containment Building	Cubic Yards or Cubic Meters
	Miscellaneous (Subpart X):	
X01	Open Burning/Open Detonation	Any Unit of Measure Listed Below
X02	Mechanical Processing	Short Tons Per Hour; Metric Tons Per Hour; Short Tons Per Day; Metric Tons Per Day; Pounds Per Hour; or Kilograms Per Hour
X03	Thermal Unit	Gallons Per Day; Liters Per Day; Pounds Per Hour; Short Tons Per Hour; Kilograms Per Hour; Metric Tons Per Day; Metric Tons Per Hour; Short Tons Per Day; or Btu's Per Hour
X04	Geologic Repository	Cubic Yards or Cubic Meters
X99	Other Subpart X	Any Unit of Measure Listed Below

UNIT OF MEASURE	UNIT OF MEASURE CODE
Gallons	G
Gallons Per Hour	E
Gallons Per Day	U
Liters	L
Liters Per Hour	H
Liters Per Day	V
Short Tons Per Hour	D
Metric Tons Per Hour	W
Short Tons Per Day	N
Metric Tons Per Day	S
Pounds Per Hour	J
Kilograms Per Hour	R
Cubic Yards	Y
Cubic Meters	C
Acres	B
Acre-feet	A
Hectares	Q
Hectare-meter	F
Btu's Per Hour	I

XIV DESCRIPTION OF HAZARDOUS WASTES

EPA CODE	CHARACTERISTIC OR CONTAMINANT	ESTIMATED ANNUAL QUANTITY OF WASTE	UNIT OF MEASURE	PROCESS CODES	PROCESS DESCRIPTION
D001	Only those ignitable wastes which can be treated by permitted methods prior to placement in the landfill.	42,120	T	D80, T01, S01, S02, T02	
D002	Only those corrosive wastes which can be treated by permitted methods prior to placement in the landfill.	42,120	T	D80, T01, S01, S02, T02	
D003	Only those reactive wastes which can be treated by permitted methods prior to placement in the landfill.	42,120	T	D80, T01, S01, S02, T02	
D004	Arsenic	42,120	T	D80, T01, S01, S02, T02	
D005	Barium	42,120	T	D80, T01, S01, S02, T02	
D006	Cadmium	42,120	T	D80, T01, S01, S02, T02	
D007	Chromium	42,120	T	D80, T01, S01, S02, T02	
D008	Lead	42,120	T	D80, T01, S01, S02, T02	
D009	Mercury	42,120	T	D80, T01, S01, S02, T02	
D010	Selenium	42,120	T	D80, T01, S01, S02, T02	
D011	Silver	42,120	T	D80, T01, S01, S02, T02	
D012	Endrin	42,120	T	D80, T01, S01, S02, T02	
D013	Lindane	42,120	T	D80, T01, S01, S02, T02	
D014	Methoxychlor	42,120	T	D80, T01, S01, S02, T02	
D015	Toxaphene	42,120	T	D80, T01, S01, S02, T02	
D016	2,4-D	42,120	T	D80, T01, S01, S02, T02	
D017	2,4,5-TP (Silvex)	42,120	T	D80, T01, S01, S02, T02	
D018	Benzene	42,120	T	D80, T01, S01, S02, T02	
D019	Carbon tetrachloride	42,120	T	D80, T01, S01, S02, T02	
D020	Chlordane	42,120	T	D80, T01, S01, S02, T02	
D021	Chlorobenzene	42,120	T	D80, T01, S01, S02, T02	

XIV DESCRIPTION OF HAZARDOUS WASTES

EPA CODE	CHARACTERISTIC OR CONTAMINANT	ESTIMATED ANNUAL QUANTITY OF WASTE	UNIT OF MEASURE	PROCESS CODES	PROCESS DESCRIPTION
D022	Chloroform	42,120	T	D80, T01, S01, S02, T02	
D023	o-Cresol	42,120	T	D80, T01, S01, S02, T02	
D024	m-Cresol	42,120	T	D80, T01, S01, S02, T02	
D025	p-Cresol	42,120	T	D80, T01, S01, S02, T02	
D026	Cresol	42,120	T	D80, T01, S01, S02, T02	
D027	1,4-Dichlorobenzene	42,120	T	D80, T01, S01, S02, T02	
D028	1,2-Dichloroethane	42,120	T	D80, T01, S01, S02, T02	
D029	1,1-Dichloroethylene	42,120	T	D80, T01, S01, S02, T02	
D030	2,4-Dinitrotoluene	42,120	T	D80, T01, S01, S02, T02	
D031	Heptachlor (and its epoxide)	42,120	T	D80, T01, S01, S02, T02	
D032	Hexachlorobenzene	42,120	T	D80, T01, S01, S02, T02	
D033	Hexachlorobutadiene	42,120	T	D80, T01, S01, S02, T02	
D034	Hexachloroethane	42,120	T	D80, T01, S01, S02, T02	
D035	Methyl ethyl ketone	42,120	T	D80, T01, S01, S02, T02	
D036	Nitrobenzene	42,120	T	D80, T01, S01, S02, T02	
D037	Pentrachlorophenol	42,120	T	D80, T01, S01, S02, T02	
D038	Pyridine	42,120	T	D80, T01, S01, S02, T02	
D039	Tetrachloroethylene	42,120	T	D80, T01, S01, S02, T02	
D040	Trichloroethylene	42,120	T	D80, T01, S01, S02, T02	
D041	2,4,5-Trichlorophenol	42,120	T	D80, T01, S01, S02, T02	
D042	2,4,6-Trichlorophenol	42,120	T	D80, T01, S01, S02, T02	

XIV DESCRIPTION OF HAZARDOUS WASTES

EPA CODE	CHARACTERISTIC OR CONTAMINANT	ESTIMATED ANNUAL QUANTITY OF WASTE	UNIT OF MEASURE	PROCESS CODES	PROCESS DESCRIPTION
D043	Vinyl chloride	42,120	T	D80, T01, S01, S02, T02	

EPA CODE	CHARACTERISTIC OR CONTAMINANT	ESTIMATED ANNUAL QUANTITY OF WASTE	UNIT OF MEASURE	PROCESS CODES	PROCESS DESCRIPTION
F001	The following spent halogenated solvents used in degreasing: Tetrachloroethylene, trichloroethylene, methylene chloride, 1,1,1-trichloroethane, carbon tetrachloride, and chlorinated fluorocarbons; All spent solvent mixtures/blends used in degreasing containing, before use, a total of ten percent or more (by volume) of one or more of the above halogenated solvents or those solvents listed in F002, F004, and F005; and still bottoms from the recovery of these spent solvents and spent solvent mixtures	42,120	T	D80, T01, S01, S02, T02	
F002	The following spent halogenated solvents: Tetrachloroethylene, methylene chloride, trichloroethylene, 1,1,1-trichloroethane, chlorobenzene, 1,1,2-trichloro-1,2,2-trifluoroethane, orthodichlorobenzene, trichlorofluoromethane, and 1,1,2-trichloroethane; All halogenated solvent mixtures/blends containing, before use, a total of ten percent or more (by volume) of one or more of the above halogenated solvents or those listed in F001, F004, or F005; and still bottoms from the recovery of these spent solvents and spent solvent mixtures	42,120	T	D80, T01, S01, S02, T02	
F003	The following spent non-halogenated solvents: Xylene, acetone, ethyl acetate, ethyl benzene, ethyl ether, methyl isobutyl ketone, n-butyl alcohol, cyclohexanone, and methanol; All spent solvent mixtures/blends containing, before use, one or more of the above non-halogenated solvents, and, a total of ten percent or more (by volume) of one or more of those solvents listed in F001, F002, F004, and F005; and still bottoms from the recovery of these spent solvents and spent solvent mixtures	42,120	T	D80, T01, S01, S02, T02	
F004	The following spent non-halogenated solvents: Cresols and cresylic acid, and nitrobenzene: All spent solvent mixtures/blends containing, before use, a total of ten percent or more (by volume) of one or more of the above non-halogenated solvents or those solvents listed in F001, F002, and F005; and still bottoms from the recovery of these spent solvents and spent solvent mixtures	42,120	T	D80, T01, S01, S02, T02	
F005	The following spent non-halogenated solvents: Toluene, methyl ethyl ketone, carbon disulfide, isobutanol, pyridine, benzene, 2-ethoxyethanol, and 2-nitropropane; All spent solvent mixtures/blends containing, before use, a total of ten percent or more (by volume) of one or more of the above non-halogenated solvents or those solvents listed in F001, F002, or F004; and still bottoms from the recovery of these spent solvents and spent solvent mixtures	42,120	T	D80, T01, S01, S02, T02	

XIV DESCRIPTION OF HAZARDOUS WASTES

EPA CODE	CHARACTERISTIC OR CONTAMINANT	ESTIMATED ANNUAL QUANTITY OF WASTE	UNIT OF MEASURE	PROCESS CODES	PROCESS DESCRIPTION
F006	Wastewater treatment sludges from electroplating operations except from the following processes:(1) Sulfuric acid anodizing of aluminum; (2) tin plating on carbon steel; (3) zinc plating (segregated basis) on carbon steel; (4) aluminum or zinc-aluminum plating on carbon steel; (5) cleaning/stripping associated with tin, zinc and aluminum plating on carbon steel; and (6) chemical etching and milling of aluminum	42,120	T	D80, T01, S01, S02, T02	
F007	Spent cyanide plating bath solutions from electroplating operations	42,120	T	D80, T01, S01, S02, T02	
F008	Plating bath residues from the bottom of plating baths from electroplating operations where cyanides are used in the process	42,120	T	D80, T01, S01, S02, T02	
F009	Spent stripping and cleaning bath solutions from electroplating operations where cyanides are used in the process	42,120	T	D80, T01, S01, S02, T02	
F010	Quenching bath residues from oil baths from metal heat treating operations where cyanides are used in the process	42,120	T	D80, T01, S01, S02, T02	
F011	Spent cyanide solutions from salt bath pot cleaning from metal heat treating operations	42,120	T	D80, T01, S01, S02, T02	
F012	Quenching waste water treatment sludges from metal heat treating operations where cyanides are used in the process	42,120	T	D80, T01, S01, S02, T02	
F019	Wastewater treatment sludges from the chemical conversion coating of aluminum except from zirconium phosphating in aluminum can washing when such phosphating is an exclusive conversion coating process	42,120	T	D80, T01, S01, S02, T02	
F024	Process wastes, including but not limited to, distillation residues, heavy ends, tars, and reactor clean-out wastes from the production of certain chlorinated aliphatic hydrocarbons by free radical catalyzed processes. These chlorinated aliphatic hydrocarbons are those having carbon chain lengths ranging from one to and including five, with varying amounts and positions of chlorine substitution. (This listing does not include wastewaters, wastewater treatment sludges, spent catalysts, and wastes listed in §261.31 or §261.32.)	42,120	T	D80, T01, S01, S02, T02	
F025	Condensed light ends, spent filters and filter aids, and spent desiccant wastes from the production of certain chlorinated aliphatic hydrocarbons, by free radical catalyzed processes. These chlorinated aliphatic hydrocarbons are those having carbon chain lengths ranging from one to and including five, with varying amounts and positions of chlorine substitution	42,120	T	D80, T01, S01, S02, T02	
F028	Residues resulting from the incineration or thermal treatment of soil contaminated with EPA Hazardous Waste Nos. F020, F021, F022, F023, F026, F027.	42,120	T	D80, T01, S01, S02, T02	
F032	Wastewaters (except those that have not come into contact with process contaminants), process residuals, preservative drippage, and spent formulations from wood preserving processes generated at plants that currently use or have previously used chlorophenolic formulations (except potentially cross-contaminated wastes that have had the F032 waste code deleted in accordance with 40 CFR 261.35 of this chapter and where the generator does not resume or initiate use of chlorophenolic formulations). This listing does not include K001 bottom sediment sludge from the treatment of wastewater from wood preserving processes that use creosote and/or pentachlorophenol.	42,120	T	D80, T01, S01, S02, T02	

XIV DESCRIPTION OF HAZARDOUS WASTES

EPA CODE	CHARACTERISTIC OR CONTAMINANT	ESTIMATED ANNUAL QUANTITY OF WASTE	UNIT OF MEASURE	PROCESS CODES	PROCESS DESCRIPTION
F034	Wastewaters (except those that have not come into contact with process contaminants), process residuals, preservative drippage, and spent formulations from wood preserving process generated at plants that use creosote formulations. This listing does not include K001 bottom sediment sludge from the treatment of wastewater from wood preserving processes that use creosote and/or pentachlorophenol.	42,120	T	D80, T01, S01, S02, T02	
F035	Wastewaters (except those that have not come into contact with process contaminants), process residuals, preservative drippage, and spent formulations from wood preserving process generated at plants that use inorganic preservatives containing arsenic or chromium. This listing does not include K001 bottom sediment sludge from the treatment of wastewater from wood preserving processes that use creosote and/or pentachlorophenol.	42,120	T	D80, T01, S01, S02, T02	
F037	Petroleum refinery primary oil/water/solids separation sludge-Any sludge generated from the gravitational separation of oil/water/solids during the storage or treatment of process wastewaters and oily cooling wastewaters from petroleum refineries. Such sludges include, but are not limited to, those generated in: oil/water/solids separators; tanks and impoundments; ditches and other conveyances; sumps; and stormwater units receiving dry weather flow. Sludge generated in stormwater units that do not receive dry weather flow, sludges generated from non-contact once-through cooling waters segregated for treatment from other process or oily cooling waters, sludges generated in aggressive biological treatment units as defined in 40 CFR 261.31(b)(2) (including sludges generated in one or more additional units after wastewaters have been treated in aggressive biological treatment units) and K051 wastes are not included in this listing	42,120	T	D80, T01, S01, S02, T02	
F038	Petroleum refinery secondary (emulsified) oil/water/solids separation sludge-Any sludge and/or float generated from the physical and/or chemical separation of oil/water/solids in process wastewaters and oily cooling wastewaters from petroleum refineries. Such wastes include, but are not limited to, all sludges and floats generated in: induced air flotation (IAF) units, tanks and impoundments, and all sludges generated in DAF units. Sludges generated in stormwater units that do not receive dry weather flow, sludges generated from non-contact once-through cooling waters segregated for treatment from other process or oily cooling waters, sludges and floats generated in aggressive biological treatment units as defined in 40 CFR 261.31(b)(2) (including sludges and floats generated in one or more additional units after wastewaters have been treated in aggressive biological treatment units) and F037, K048, and K051 wastes are not included in this listing	42,120	T	D80, T01, S01, S02, T02	
F039	Leachate (liquids that have percolated through land disposed wastes) resulting from the disposal of more than one restricted waste classified as hazardous under subpart D of this part. (Leachate resulting from the disposal of one or more of the following EPA Hazardous Wastes and no other Hazardous Wastes retains its EPA Hazardous Waste Number(s): F020, F021, F022, F026, F027, and/or F028.)	42,120	T	D80, T01, S01, S02, T02	

XIV DESCRIPTION OF HAZARDOUS WASTES

EPA CODE	CHARACTERISTIC OR CONTAMINANT	ESTIMATED ANNUAL QUANTITY OF WASTE	UNIT OF MEASURE	PROCESS CODES	PROCESS DESCRIPTION
K001	Bottom sediment sludge from the treatment of wastewaters from wood preserving processes that use creosote and/or pentachlorophenol	42,120	T	D80, T01, S01, S02, T02	
K002	Wastewater treatment sludge from the production of chrome yellow and orange pigments	42,120	T	D80, T01, S01, S02, T02	
K003	Wastewater treatment sludge from the production of molybdate orange pigments	42,120	T	D80, T01, S01, S02, T02	
K004	Wastewater treatment sludge from the production of zinc yellow pigments	42,120	T	D80, T01, S01, S02, T02	
K005	Wastewater treatment sludge from the production of chrome green pigments	42,120	T	D80, T01, S01, S02, T02	
K006	Wastewater treatment sludge from the production of chrome oxide green pigments (anhydrous and hydrated)	42,120	T	D80, T01, S01, S02, T02	
K007	Wastewater treatment sludge from the production of iron blue pigments	42,120	T	D80, T01, S01, S02, T02	
K008	Oven residue from the production of chrome oxide green pigments	42,120	T	D80, T01, S01, S02, T02	
K009	Distillation bottoms from the production of acetaldehyde from ethylene	42,120	T	D80, T01, S01, S02, T02	
K010	Distillation side cuts from the production of acetaldehyde from ethylene	42,120	T	D80, T01, S01, S02, T02	
K011	Bottom stream from the wastewater stripper in the production of acrylonitrile	42,120	T	D80, T01, S01, S02, T02	
K013	Bottom stream from the acetonitrile column in the production of acrylonitrile	42,120	T	D80, T01, S01, S02, T02	
K014	Bottoms from the acetonitrile purification column in the production of acrylonitrile	42,120	T	D80, T01, S01, S02, T02	
K015	Still bottoms from the distillation of benzyl chloride	42,120	T	D80, T01, S01, S02, T02	
K016	Heavy ends or distillation residues from the production of carbon tetrachloride	42,120	T	D80, T01, S01, S02, T02	
K017	Heavy ends (still bottoms) from the purification column in the production of epichlorohydrin	42,120	T	D80, T01, S01, S02, T02	
K018	Heavy ends from the fractionation column in ethyl chloride production	42,120	T	D80, T01, S01, S02, T02	
K019	Heavy ends from the distillation of ethylene dichloride in ethylene dichloride production	42,120	T	D80, T01, S01, S02, T02	
K020	Heavy ends from the distillation of vinyl chloride in vinyl chloride monomer production	42,120	T	D80, T01, S01, S02, T02	
K021	Aqueous spent antimony catalyst waste from fluoromethanes production	42,120	T	D80, T01, S01, S02, T02	

XIV DESCRIPTION OF HAZARDOUS WASTES

EPA CODE	CHARACTERISTIC OR CONTAMINANT	ESTIMATED ANNUAL QUANTITY OF WASTE	UNIT OF MEASURE	PROCESS CODES	PROCESS DESCRIPTION
K022	Distillation bottom tars from the production of phenol/acetone from cumene	42,120	T	D80, T01, S01, S02, T02	
K023	Distillation light ends from the production of phthalic anhydride from naphthalene	42,120	T	D80, T01, S01, S02, T02	
K024	Distillation bottoms from the production of phthalic anhydride from naphthalene	42,120	T	D80, T01, S01, S02, T02	
K025	Distillation bottoms from the production of nitrobenzene by the nitration of benzene	42,120	T	D80, T01, S01, S02, T02	
K026	Stripping still tails from the production of methy ethyl pyridines	42,120	T	D80, T01, S01, S02, T02	
K027	Centrifuge and distillation residues from toluene diisocyanate production	42,120	T	D80, T01, S01, S02, T02	
K028	Spent catalyst from the hydrochlorinator reactor in the production of 1,1,1-trichloroethane	42,120	T	D80, T01, S01, S02, T02	
K029	Waste from the product steam stripper in the production of 1,1,1-trichloroethane	42,120	T	D80, T01, S01, S02, T02	
K030	Column bottoms or heavy ends from the combined production of trichloroethylene and perchloroethylene	42,120	T	D80, T01, S01, S02, T02	
K031	By-product salts generated in the production of MSMA and cacodylic acid	42,120	T	D80, T01, S01, S02, T02	
K032	Wastewater treatment sludge from the production of chlordane	42,120	T	D80, T01, S01, S02, T02	
K033	Wastewater and scrub water from the chlorination of cyclopentadiene in the production of chlordane	42,120	T	D80, T01, S01, S02, T02	
K034	Filter solids from the filtration of hexachlorocyclopentadiene in the production of chlordane	42,120	T	D80, T01, S01, S02, T02	
K035	Wastewater treatment sludges generated in the production of creosote	42,120	T	D80, T01, S01, S02, T02	
K036	Still bottoms from toluene reclamation distillation in the production of disulfoton	42,120	T	D80, T01, S01, S02, T02	
K037	Wastewater treatment sludges from the production of disulfoton	42,120	T	D80, T01, S01, S02, T02	
K038	Wastewater from the washing and stripping of phorate production	42,120	T	D80, T01, S01, S02, T02	
K039	Filter cake from the filtration of diethylphosphorodithioic acid in the production of phorate	42,120	T	D80, T01, S01, S02, T02	
K040	Wastewater treatment sludge from the production of phorate	42,120	T	D80, T01, S01, S02, T02	
K041	Wastewater treatment sludge from the production toxaphene	42,120	T	D80, T01, S01, S02, T02	
K042	Heavy ends or distillation residues from the distillation of tetrachlorobenzene in the production of 2,4,5-T	42,120	T	D80, T01, S01, S02, T02	

XIV DESCRIPTION OF HAZARDOUS WASTES

EPA CODE	CHARACTERISTIC OR CONTAMINANT	ESTIMATED ANNUAL QUANTITY OF WASTE	UNIT OF MEASURE	PROCESS CODES	PROCESS DESCRIPTION
K043	2,6-Dichlorophenol waste from the production of 2,4-D	42,120	T	D80, T01, S01, S02, T02	
K044	Wastewater treatment sludges from the manufacturing and processing of explosives	42,120	T	D80, T01, S01, S02, T02	
K045	Spent carbon from the treatment of wastewater containing explosives	42,120	T	D80, T01, S01, S02, T02	
K046	Wastewater treatment sludges from the manufacturing, formulation and loading of lead-based initiating compounds	42,120	T	D80, T01, S01, S02, T02	
K047	Pink/red water from TNT operations	42,120	T	D80, T01, S01, S02, T02	
K048	Dissolved air flotation (DAF) float from the petroleum refining industry	42,120	T	D80, T01, S01, S02, T02	
K049	Slop oil emulsion solids from the petroleum refining industry	42,120	T	D80, T01, S01, S02, T02	
K050	Heat exchanger bundle cleaning sludge from the petroleum refining industry	42,120	T	D80, T01, S01, S02, T02	
K051	API separator sludge from the petroleum refining industry	42,120	T	D80, T01, S01, S02, T02	
K052	Tank bottoms (leaded) from the petroleum refining industry	42,120	T	D80, T01, S01, S02, T02	
K060	Ammonia still lime sludge from coking operations	42,120	T	D80, T01, S01, S02, T02	
K061	Emission control dust/sludge from the primary production of steel in electric furnaces	42,120	T	D80, T01, S01, S02, T02	
K062	Spent pickle liquor generated by steel finishing operations of facilities within the iron and steel industry (SIC Codes 331 and 332)	42,120	T	D80, T01, S01, S02, T02	
K064	Acid plant blowdown slurry/sludge resulting from the thickening of blowdown slurry from primary copper production	42,120	T	D80, T01, S01, S02, T02	
K065	Surface impoundment solids contained in and dredged from surface impoundments at primary lead smelting facilities	42,120	T	D80, T01, S01, S02, T02	
K066	Sludge from treatment of process wastewater and/or acid plant blowdown from primary zinc production	42,120	T	D80, T01, S01, S02, T02	
K069	Emission control dust/sludge from secondary lead smelting. (Note: This listing is stayed administratively for sludge generated from secondary acid scrubber systems. The stay will remain in effect until further administrative action is taken. If EPA takes further action effecting this stay, EPA will publish a notice of the action in the Federal Register.)	42,120	T	D80, T01, S01, S02, T02	

XIV DESCRIPTION OF HAZARDOUS WASTES

EPA CODE	CHARACTERISTIC OR CONTAMINANT	ESTIMATED ANNUAL QUANTITY OF WASTE	UNIT OF MEASURE	PROCESS CODES	PROCESS DESCRIPTION
K071	Brine purification muds from the mercury cell process in chlorine production, where separately prepurified brine is not used	42,120	T	D80, T01, S01, S02, T02	
K073	Chlorinated hydrocarbon waste from the purification step of the diaphragm cell process using graphite anodes in chlorine production	42,120	T	D80, T01, S01, S02, T02	
K083	Distillation bottoms from aniline production	42,120	T	D80, T01, S01, S02, T02	
K084	Wastewater treatment sludges generated during the production of veterinary pharmaceuticals from arsenic or organo-arsenic compounds	42,120	T	D80, T01, S01, S02, T02	
K085	Distillation or fractionation column bottoms from the production of chlorobenzenes	42,120	T	D80, T01, S01, S02, T02	
K086	Solvent washes and sludges, caustic washes and sludges, or water washes and sludges from cleaning tubs and equipment used in the formulation of ink from pigments, driers, soaps, and stabilizers containing chromium and lead	42,120	T	D80, T01, S01, S02, T02	
K087	Decanter tank tar sludge from coking operations	42,120	T	D80, T01, S01, S02, T02	
K088	Spent potliners from primary aluminum reduction	42,120	T	D80, T01, S01, S02, T02	
K090	Emission control dust or sludge from ferrochromiumsilicon production	42,120	T	D80, T01, S01, S02, T02	
K091	Emission control dust or sludge from ferrochromium production	42,120	T	D80, T01, S01, S02, T02	
K093	Distillation light ends from the production of phthalic anhydride from ortho-xylene	42,120	T	D80, T01, S01, S02, T02	
K094	Distillation bottoms from the production of phthalic anhydride from ortho-xylene	42,120	T	D80, T01, S01, S02, T02	
K095	Distillation bottoms from the production of 1,1,1-trichloroethane	42,120	T	D80, T01, S01, S02, T02	
K096	Heavy ends from the heavy ends column from the production of 1,1,1-trichloroethane	42,120	T	D80, T01, S01, S02, T02	
K097	Vacuum stripper discharge from the chlordane chlorinator in the production of chlordane	42,120	T	D80, T01, S01, S02, T02	
K098	Untreated process wastewater from the production of toxaphene	42,120	T	D80, T01, S01, S02, T02	
K099	Untreated wastewater from the production of 2,4-D	42,120	T	D80, T01, S01, S02, T02	
K100	Waste leaching solution from acid leaching of emission control dust/sludge from secondary lead smelting	42,120	T	D80, T01, S01, S02, T02	

XIV DESCRIPTION OF HAZARDOUS WASTES

EPA CODE	*CHARACTERISTIC OR CONTAMINANT*	*ESTIMATED ANNUAL QUANTITY OF WASTE*	*UNIT OF MEASURE*	*PROCESS CODES*	*PROCESS DESCRIPTION*
K101	Distillation tar residues from the distillation of aniline-based compounds in the production of veterinary pharmaceuticals from arsenic or organo-arsenic compounds	42,120	T	D80, T01, S01, S02, T02	
K102	Residue from the use of activated carbon for decolorization in the production of veterinary pharmaceuticals from arsenic or organo-arsenic compounds	42,120	T	D80, T01, S01, S02, T02	
K103	Process residues from aniline extraction from the production of aniline	42,120	T	D80, T01, S01, S02, T02	
K104	Combined wastewater streams generated from nitrobenzene/aniline production	42,120	T	D80, T01, S01, S02, T02	
K105	Separated aqueous stream from the reactor product washing step in the production of chlorobenzenes	42,120	T	D80, T01, S01, S02, T02	
K106	Wastewater treatment sludge from the mercury cell process in chlorine production	42,120	T	D80, T01, S01, S02, T02	
K107	Column bottoms from product separation from the production of 1,1-dimethyl-hydrazine (UDMH) from carboxylic acid hydrazines	42,120	T	D80, T01, S01, S02, T02	
K108	Condensed column overheads from product separation and condensed reactor vent gases from the production of 1,1-dimethylhydrazine (UDMH) from carboxylic acid hydrazides	42,120	T	D80, T01, S01, S02, T02	
K109	Spent filter cartridges from product purification from the production of 1,1-dimethylhydrazine (UDMH) from carboxylic acid hydrazides	42,120	T	D80, T01, S01, S02, T02	
K110	Condensed column overheads from intermediate separation from the production of 1,1- dimethylhydrazine (UDMH) from carboxylic acid hydrazides	42,120	T	D80, T01, S01, S02, T02	
K111	Product washwaters from the production of dinitrotoluene via nitration of toluene	42,120	T	D80, T01, S01, S02, T02	
K112	Reaction by-product water from the drying column in the production of toluenediamine via hydrogenation of dinitrotoluene	42,120	T	D80, T01, S01, S02, T02	
K113	Condensed liquid light ends from the purification of toluenediamine in the production of toluenediamine via hydrogenation of dinitrotoluene	42,120	T	D80, T01, S01, S02, T02	
K114	Vicinals from the purification of toluenediamine in the production of toluenediamine via hydrogenation of dinitrotoluene	42,120	T	D80, T01, S01, S02, T02	
K115	Heavy ends from the purification of toluenediamine in the production of toluenediamine via hydrogenation of dinitrotoluene	42,120	T	D80, T01, S01, S02, T02	

XIV DESCRIPTION OF HAZARDOUS WASTES

EPA CODE	CHARACTERISTIC OR CONTAMINANT	ESTIMATED ANNUAL QUANTITY OF WASTE	UNIT OF MEASURE	PROCESS CODES	PROCESS DESCRIPTION
K116	Organic condensate from the solvent recovery column in the production of toluene diisocyanate via phosgenation of toluenediamine	42,120	T	D80, T01, S01, S02, T02	
K117	Wastewater from the reactor vent gas scrubber in the production of ethylene dibromide via bromination of ethene	42,120	T	D80, T01, S01, S02, T02	
K118	Spent adsorbent solids from purification of ethylene dibromide in the production of ethylene dibromide via bromination of ethene	42,120	T	D80, T01, S01, S02, T02	
K123	Process wastewater (including supernates, filtrates, and washwaters) from the production of ethylenebisdithiocarbamic acid and its salt	42,120	T	D80, T01, S01, S02, T02	
K124	Reactor vent scrubber water from the production of ethylenebisdithiocarbamic acid and its salts	42,120	T	D80, T01, S01, S02, T02	
K125	Filtration, evaporation, and centrifugation solids from the production of ethylenebisdithiocarbamic acid and its salts	42,120	T	D80, T01, S01, S02, T02	
K126	Baghouse dust and floor sweepings in milling and packaging operations from the production or formulation of ethylenebisdithiocarbamic acid and its salts	42,120	T	D80, T01, S01, S02, T02	
K131	Wastewater from the reactor and spent sulfuric acid from the acid dryer from the production of methyl bromide	42,120	T	D80, T01, S01, S02, T02	
K132	Spent absorbent and wastewater separator solids from the production of methyl bromide	42,120	T	D80, T01, S01, S02, T02	
K136	Still bottoms from the purification of ethylene dibromide in the production of ethylene dibromide via bromination of ethene	42,120	T	D80, T01, S01, S02, T02	
K141	Process residues from the recovery of coal tar, including, but not limited to, collecting sump residues from the production of coke from coal or the recovery of coke by-products produced from coal. This listing does not include K087 (decanter tank tar sludges from coking operations).	42,120	T	D80, T01, S01, S02, T02	
K142	Tar storage tank residues from the production of coke from coal or from the recovery of coke by-products from coal.	42,120	T	D80, T01, S01, S02, T02	
K143	Process residues from the recovery of light oil, including, but not limited to, those generated in stills, decanters, and wash oil recovery units from the recovery of coke by-products produced from coal.	42,120	T	D80, T01, S01, S02, T02	
K144	Wastewater sump residues from light oil refining, including, but not limited to, intercepting or contamination sump sludges from the recovery of coke by-products produced from coal.	42,120	T	D80, T01, S01, S02, T02	
K145	Residues from naphthalene collection and recovery operations from the recovery of coke by-products produced from coal	42,120	T	D80, T01, S01, S02, T02	

XIV DESCRIPTION OF HAZARDOUS WASTES

EPA CODE	*CHARACTERISTIC OR CONTAMINANT*	*ESTIMATED ANNUAL QUANTITY OF WASTE*	*UNIT OF MEASURE*	*PROCESS CODES*	*PROCESS DESCRIPTION*
K147	Tar storage tank residues from coal tar refining	42,120	T	D80, T01, S01, S02, T02	
K148	Residues from coal tar distillation, including but not limited to, still bottoms	42,120	T	D80, T01, S01, S02, T02	
K149	Distillation bottoms from the production of alpha-(or methyl-) chlorinated toluenes, ring-chlorinated toluenes, benzoyl chlorides, and compounds with mixtures of these functional groups (this waste does not include still bottoms from the distillation of benzyl chloride).	42,120	T	D80, T01, S01, S02, T02	
K150	Organic residuals, excluding spent carbon adsorbent, from the spent chlorine gas and hydrochloric acid recovery processes associated with the production of alpha-(or methyl-) chlorinated toluenes, ring-chlorinated toluenes, benzoyl chlorides, and compounds with mixtures of these functional groups.	42,120	T	D80, T01, S01, S02, T02	
K151	Wastewater treatment sludges, excluding neutralization and biological sludges, generated during the treatment of wastewaters from the production of alpha-(or methyl-) chlorinated toluenes, ring-chlorinated toluenes, benzoyl chlorides, and compounds with mixtures of these functional groups.	42,120	T	D80, T01, S01, S02, T02	

XIV DESCRIPTION OF HAZARDOUS WASTES

EPA CODE	CHARACTERISTIC OR CONTAMINANT	ESTIMATED ANNUAL QUANTITY OF WASTE	UNIT OF MEASURE	PROCESS CODES	PROCESS DESCRIPTION
P001	Warfarin, & salts, when present at concentrations greater than 0.3%, 2H-1-Benzopyran-2-one, 4-hydroxy-3-(3-oxo-1 phenylbutyl)-, & salts, when present at concentrations greater than 0.3%	42,120	T	D80, T01, S01, S02, T02	
P002	Acetamide, N-(aminothioxomethyl)-, 1-Acetyl-2-thiourea	42,120	T	D80, T01, S01, S02, T02	
P003	Acrolein, 2-Propenal	42,120	T	D80, T01, S01, S02, T02	
P004	Aldrin, 1,4,5,8-Dimethanonaphthalene, 1,2,3,4,10,10-hexa-chloro- 1,4,4a,5,8,8a,-hexahydro-, (1alpha,4alpha,4abeta,5alpha,8alpha,8abeta)-	42,120	T	D80, T01, S01, S02, T02	
P005	2-Propen-1-ol, Allyl alcohol	42,120	T	D80, T01, S01, S02, T02	
P006	Aluminum phosphide	42,120	T	D80, T01, S01, S02, T02	
P007	5-(Aminomethyl)-3-isoxazolol, 3(2H)-Isoxazolone, 5-(aminomethyl)-	42,120	T	D80, T01, S01, S02, T02	
P008	4-Pyridinamine, 4-Aminopyridine	42,120	T	D80, T01, S01, S02, T02	
P009	Phenol, 2,4,6-trinitro-, ammonium salt, Ammonium picrate	42,120	T	D80, T01, S01, S02, T02	
P010	Arsenic acid H_3AsO_4	42,120	T	D80, T01, S01, S02, T02	
P011	Arsenic pentoxide, Arsenic oxide As_2O_5	42,120	T	D80, T01, S01, S02, T02	
P012	Arsenic oxide As_2O_3, Arsenic trioxide	42,120	T	D80, T01, S01, S02, T02	
P013	Barium cyanide	42,120	T	D80, T01, S01, S02, T02	
P014	Benzenethiol, Thiophenol	42,120	T	D80, T01, S01, S02, T02	
P015	Beryllium powder	42,120	T	D80, T01, S01, S02, T02	
P016	Dichloromethyl ether, Methane, oxybis[chloro-	42,120	T	D80, T01, S01, S02, T02	
P017	2-Propanone, 1-bromo-, Bromoacetone	42,120	T	D80, T01, S01, S02, T02	
P018	Strychnidin-10-one, 2,3-dimethoxy-, Brucine	42,120	T	D80, T01, S01, S02, T02	

XIV DESCRIPTION OF HAZARDOUS WASTES

EPA CODE	CHARACTERISTIC OR CONTAMINANT	ESTIMATED ANNUAL QUANTITY OF WASTE	UNIT OF MEASURE	PROCESS CODES	PROCESS DESCRIPTION
P020	Phenol, 2-(1-methylpropyl)-4,6-dinitro-, Dinoseb	42,120	T	D80, T01, S01, S02, T02	
P021	Calcium cyanide, Calcium cyanide $Ca(CN)_2$	42,120	T	D80, T01, S01, S02, T02	
P022	Carbon disulfide	42,120	T	D80, T01, S01, S02, T02	
P023	Acetaldehyde, chloro-, Chloroacetaldehyde	42,120	T	D80, T01, S01, S02, T02	
P024	Benzenamine, 4-chloro-, p-Chloroaniline	42,120	T	D80, T01, S01, S02, T02	
P026	Thiourea, (2-chlorophenyl)-, 1-(o-Chlorophenyl)thiourea	42,120	T	D80, T01, S01, S02, T02	
P027	Propanenitrile, 3-chloro-, 3-Chloropropionitrile	42,120	T	D80, T01, S01, S02, T02	
P028	Benzene, (chloromethyl)-, Benzyl chloride	42,120	T	D80, T01, S01, S02, T02	
P029	Copper cyanide, Copper cyanide Cu(CN)	42,120	T	D80, T01, S01, S02, T02	
P030	Cyanides (soluble cyanide salts), not otherwise specified	42,120	T	D80, T01, S01, S02, T02	
P031	Ethanedinitrile, Cyanogen	42,120	T	D80, T01, S01, S02, T02	
P033	Cyanogen chloride (CN)Cl, Cyanogen chloride	42,120	T	D80, T01, S01, S02, T02	
P034	2-Cyclohexyl-4,6-dinitrophenol, Phenol, 2-cyclohexyl-4,6-dinitro-	42,120	T	D80, T01, S01, S02, T02	
P036	Dichlorophenylarsine, Arsonous dichloride, phenyl-	42,120	T	D80, T01, S01, S02, T02	
P037	Dieldrin, 2,7:3,6-Dimethanonaphth [2,3-b]oxirene, 3,4,5,6,9,9-hexa- chloro-1a,2,2a,3,6,6a,7,7a-octahydro-, (1aal- pha,2beta,2aalpha,3beta,6beta,6aalpha,7beta, 7aalpha)-	42,120	T	D80, T01, S01, S02, T02	
P038	Arsine, diethyl-, Diethylarsine	42,120	T	D80, T01, S01, S02, T02	
P039	Disulfoton, Phosphorodithioic acid, O,O-diethyl...S- [2-(ethylthio)ethyl] ester	42,120	T	D80, T01, S01, S02, T02	
P040	O,O-Diethyl O-pyrazinyl phosphorothioate, Phosphorothioic acid, O,O-diethyl O-pyrazinyl ester	42,120	T	D80, T01, S01, S02, T02	
P041	Phosphoric acid, diethyl 4-nitrophenyl ester, Diethyl-p-nitrophenyl phosphate	42,120	T	D80, T01, S01, S02, T02	
P042	Epinephrine, 1,2-Benzenediol, 4-[1-hydroxy-2-(methylamino)ethyl]-,	42,120	T	D80, T01, S01, S02, T02	

XIV DESCRIPTION OF HAZARDOUS WASTES

EPA CODE	CHARACTERISTIC OR CONTAMINANT	ESTIMATED ANNUAL QUANTITY OF WASTE	UNIT OF MEASURE	PROCESS CODES	PROCESS DESCRIPTION
P043	Phosphorofluoridic acid, bis(1-methylethyl) ester, Disopropylfluorophosphate (DFP)	42,120	T	D80, T01, S01, S02, T02	
P044	Phosphorodithioic acid, O,O-dimethyl S-[2-(methylamino)-2-oxoethyl] ester, Dimethoate	42,120	T	D80, T01, S01, S02, T02	
P045	2-Butanone, 3,3-dimethyl-1-(methylthio)-, O-[methylamino)carbonyl] oxime, Thiofanox	42,120	T	D80, T01, S01, S02, T02	
P046	Benzeneethanamine, alpha,alpha-dimethyl-, alpha,alpha-Dimethylphenethylamine	42,120	T	D80, T01, S01, S02, T02	
P047	Phenol, 2-methyl-4,6-dinitro-, & salts, 4,6-Dinitro-o-cresol, & salts	42,120	T	D80, T01, S01, S02, T02	
P048	Phenol, 2,4-dinitro-, 2,4-Dinitrophenol	42,120	T	D80, T01, S01, S02, T02	
P049	Dithiobiuret, Thioimidodicarbonic diamide $[(H_2N)C(S)]_2NH$	42,120	T	D80, T01, S01, S02, T02	
P050	Endosulfan, 6,9-Methano-2,4,3-benzodioxathiepin, 6,7,8,9,10,10-hexachloro-1,5,5a,6,9,9a-hexahydro-, 3-oxide	42,120	T	D80, T01, S01, S02, T02	
P051	2,7:3,6-Dimethanonaphth [2,3-b]oxirene, 3,4,5,6,9,9-hexa- chloro-1a,2,2a,3,6,6a,7,7a-octahydro-, (1aalpha,2beta,2abeta,3alpha,6alpha,6abeta,7beta, 7aalpha)-, & metabolites, Endrin, & metabolites, Endrin	42,120	T	D80, T01, S01, S02, T02	
P054	Ethyleneimine, Aziridine	42,120	T	D80, T01, S01, S02, T02	
P056	Fluorine	42,120	T	D80, T01, S01, S02, T02	
P057	Acetamide, 2-fluoro-, Fluoroacetamide	42,120	T	D80, T01, S01, S02, T02	
P058	Acetic acid, fluoro-, sodium salt, Fluoroacetic acid, sodium salt	42,120	T	D80, T01, S01, S02, T02	
P059	4,7-Methano-1H-indene, 1,4,5,6,7,8,8-heptachloro ...3a,4,7,7a-tetrahydro-, Heptachlor	42,120	T	D80, T01, S01, S02, T02	
P060	1,4,5,8-Dimethanonaphthalene, 1,2,3,4,10,10-hexa-chloro- 1,4,4a,5,8,8a-hexahydro-, (1alpha,4alpha,4abeta,5beta,8beta,8abeta)-, Isodrin	42,120	T	D80, T01, S01, S02, T02	
P062	Tetraphosphoric acid, hexaethyl ester, Hexaethyl tetraphosphate	42,120	T	D80, T01, S01, S02, T02	
P063	Hydrocyanic acid, Hydrogen cyanide	42,120	T	D80, T01, S01, S02, T02	
P064	Methyl isocyanate, Methane, isocyanato-	42,120	T	D80, T01, S01, S02, T02	
P065	Fulminic acid, mercury(2+) salt, Mercury fulminate	42,120	T	D80, T01, S01, S02, T02	
P066	Methomyl, Ethanimidothioic acid,...N-[[(methylamino)carbonyl]oxy]-, methyl ester	42,120	T	D80, T01, S01, S02, T02	

XIV DESCRIPTION OF HAZARDOUS WASTES

EPA CODE	CHARACTERISTIC OR CONTAMINANT	ESTIMATED ANNUAL QUANTITY OF WASTE	UNIT OF MEASURE	PROCESS CODES	PROCESS DESCRIPTION
P067	Aziridine, 2-methyl-, 1,2-Propylenimine	42,120	T	D80, T01, S01, S02, T02	
P068	Methyl hydrazine, Hydrazine, methyl-	42,120	T	D80, T01, S01, S02, T02	
P069	2-Methyllactonitrile, Propanenitrile, 2-hydroxy-2-methyl-	42,120	T	D80, T01, S01, S02, T02	
P070	Propanal, 2-methyl-2-(methylthio)-,...O-[(methylami- no)carbonyl] oxime, Aldicarb	42,120	T	D80, T01, S01, S02, T02	
P071	Phosphorothioic acid, O,O,-dimethyl O-(4-nitrophenyl) ester, Methyl parathion	42,120	T	D80, T01, S01, S02, T02	
P072	Thiourea, 1-naphthalenyl-, alpha-Naphthylthiourea	42,120	T	D80, T01, S01, S02, T02	
P073	Nickel carbonyl $Ni(CO)_4$, (T-4)-, Nickel carbonyl	42,120	T	D80, T01, S01, S02, T02	
P074	Nickel cyanide, Nickel cynaide $Ni(CN)_2$	42,120	T	D80, T01, S01, S02, T02	
P075	Nicotine, & salts, Pyridine, 3-(1-methyl-2-pyrrolidinyl)-, (S)-, & salts	42,120	T	D80, T01, S01, S02, T02	
P076	Nitric oxide, Nitrogen oxide NO	42,120	T	D80, T01, S01, S02, T02	
P077	p-Nitroaniline, Benzenamine, 4-nitro-	42,120	T	D80, T01, S01, S02, T02	
P078	Nitrogen dioxide, Nitrogen oxide NO_2	42,120	T	D80, T01, S01, S02, T02	
P081	1,2,3-Propanetriol, trinitrate, Nitroglycerine	42,120	T	D80, T01, S01, S02, T02	
P082	N-Nitrosodimethylamine, Methanamine, N-methyl-N-nitroso-	42,120	T	D80, T01, S01, S02, T02	
P084	N-Nitrosomethylvinylamine, Vinylamine, N-methyl-N-nitroso-	42,120	T	D80, T01, S01, S02, T02	
P085	Diphosphoramide, octamethyl-, Octamethylpyrophosphoramide	42,120	T	D80, T01, S01, S02, T02	
P087	Osmium oxide OsO_4, (T-4)-, Osmium tetroxide	42,120	T	D80, T01, S01, S02, T02	
P088	Endothall, 7-Oxabicyclo[2.2.1]heptane-2,3-dicarboxylic acid	42,120	T	D80, T01, S01, S02, T02	
P089	Phosphorothioic acid, O,O-diethyl O-(4-nitrophenyl) ester, Parathion	42,120	T	D80, T01, S01, S02, T02	
P092	Phenylmercury acetate, Mercury, (acetato-O)phenyl-	42,120	T	D80, T01, S01, S02, T02	
P093	Thiourea, phenyl-, Phenylthiourea	42,120	T	D80, T01, S01, S02, T02	

XIV DESCRIPTION OF HAZARDOUS WASTES

EPA CODE	CHARACTERISTIC OR CONTAMINANT	ESTIMATED ANNUAL QUANTITY OF WASTE	UNIT OF MEASURE	PROCESS CODES	PROCESS DESCRIPTION
P094	Phosphorodithioic acid, O,O-diethyl...S- [(ethylthio)methyl] ester, Phorate	42,120	T	D80, T01, S01, S02, T02	
P095	Phosgene, Carbonic dichloride	42,120	T	D80, T01, S01, S02, T02	
P096	Phosphine, Hydrogen phosphide	42,120	T	D80, T01, S01, S02, T02	
P097	Famphur, Phosphorothioic acid,...O-[4-[(dimethyl-amino)sulfonyl]phenyl] O,O-dimethyl ester	42,120	T	D80, T01, S01, S02, T02	
P098	Potassium cyanide, Potassium cyanide K(CN)	42,120	T	D80, T01, S01, S02, T02	
P099	Potassium silver cyanide, Argentate(1-), bis(cyano-C)-, potassium	42,120	T	D80, T01, S01, S02, T02	
P101	Ethyl cyanide, Propanenitrile	42,120	T	D80, T01, S01, S02, T02	
P102	Propargyl alcohol, 2-Propyn-1-ol	42,120	T	D80, T01, S01, S02, T02	
P103	Selenourea	42,120	T	D80, T01, S01, S02, T02	
P104	Silver cyanide Ag(CN), Silver cyanide	42,120	T	D80, T01, S01, S02, T02	
P105	Sodium azide	42,120	T	D80, T01, S01, S02, T02	
P106	Sodium cyanide, Sodium cyanide Na(CN)	42,120	T	D80, T01, S01, S02, T02	
P108	Strychnidin-10-one, & salts, Strychnine, & salts	42,120	T	D80, T01, S01, S02, T02	
P109	Thiodiphosphoric acid, tetraethyl ester, Tetraethyldithiopyrophosphate	42,120	T	D80, T01, S01, S02, T02	
P110	Plumbane, tetraethyl-, Tetraethyl lead	42,120	T	D80, T01, S01, S02, T02	
P111	Tetraethyl pyrophosphate, Diphosphoric acid, tetraethyl ester	42,120	T	D80, T01, S01, S02, T02	
P112	Tetranitromethane, Methane, tetranitro-	42,120	T	D80, T01, S01, S02, T02	
P113	Thallic oxide, Thallium oxide Tl_2O_3	42,120	T	D80, T01, S01, S02, T02	
P114	Selenious acid, dithallium(1+) salt, Thallium(I) selenite	42,120	T	D80, T01, S01, S02, T02	
P115	Thallium(I) sulfate, Sulfuric acid, dithallium(1+) salt	42,120	T	D80, T01, S01, S02, T02	
P116	Hydrazinecarbothioamide, Thiosemicarbazide	42,120	T	D80, T01, S01, S02, T02	

XIV DESCRIPTION OF HAZARDOUS WASTES

EPA CODE	*CHARACTERISTIC OR CONTAMINANT*	*ESTIMATED ANNUAL QUANTITY OF WASTE*	*UNIT OF MEASURE*	*PROCESS CODES*	*PROCESS DESCRIPTION*
P118	Methanethiol, trichloro-, Trichloromethanethiol	42,120	T	D80, T01, S01, S02, T02	
P119	Vanadic acid, ammonium salt, Ammonium vanadate	42,120	T	D80, T01, S01, S02, T02	
P120	Vanadium oxide V_2O_5, Vanadium pentoxide	42,120	T	D80, T01, S01, S02, T02	
P121	Zinc cyanide $Zn(CN)_2$, Zinc cyanide	42,120	T	D80, T01, S01, S02, T02	
P122	Zinc phosphide Zn_3P_2, when present at concentrations greater than 10%	42,120	T	D80, T01, S01, S02, T02	
P123	Toxaphene	42,120	T	D80, T01, S01, S02, T02	

XIV DESCRIPTION OF HAZARDOUS WASTES

EPA CODE	CHARACTERISTIC OR CONTAMINANT	ESTIMATED ANNUAL QUANTITY OF WASTE	UNIT OF MEASURE	PROCESS CODES	PROCESS DESCRIPTION
U001	Acetaldehyde, Ethanal	42,120	T	D80, T01, S01, S02, T02	
U002	Acetone, 2-Propanone	42,120	T	D80, T01, S01, S02, T02	
U003	Acetonitrile	42,120	T	D80, T01, S01, S02, T02	
U004	Ethanone, 1-phenyl-, Acetophenone	42,120	T	D80, T01, S01, S02, T02	
U005	2-Acetylaminofluorene, Acetamide, N-9H-fluoren-2-yl-	42,120	T	D80, T01, S01, S02, T02	
U006	Acetyl chloride	42,120	T	D80, T01, S01, S02, T02	
U007	Acrylamide, 2-Propenamide	42,120	T	D80, T01, S01, S02, 02	
U008	Acrylic acid, 2-Propenoic acid	42,120	T	D80, T01, S01, S02, T02	
U009	Acrylonitrile, 2-Propenenitrile	42,120	T	D80, T01, S01, S02, T02	
U010	Azirino[2',3':3,4]pyrrolo [1,2-a]indole-4,7-dione, 6-amino-8-[[(aminocarbonyl)oxy]methyl]-1,1a,2,8,8a,8b-hexahydro-8a-methoxy-5-methyl-, [1aS-(1aalpha, 8beta,8aalpha,8balpha)]-, Mitomycin C	42,120	T	D80, T01, S01, S02, T02	
U011	Amitrole, 1H-1,2,4-Triazol-3-amine	42,120	T	D80, T01, S01, S02, T02	
U012	Aniline, Benzenamine	42,120	T	D80, T01, S01, S02, T02	
U014	Benzenamine, 4,4'-carbonimidoylbis [N,N-dimethyl-, Auramine	42,120	T	D80, T01, S01, S02, T02	
U015	Azaserine, L-Serine, diazoacetate (ester)	42,120	T	D80, T01, S01, S02, T02	
U016	Benz[c]acridine	42,120	T	D80, T01, S01, S02, T02	
U017	Benzal chloride, Benzene, (dichloromethyl)-	42,120	T	D80, T01, S01, S02, T02	
U018	Benz[a]anthracene	42,120	T	D80, T01, S01, S02, T02	
U019	Benzene	42,120	T	D80, T01, S01, S02, T02	
U020	Benzenesulfonic acid chloride, Benzenesulfonyl chloride	42,120	T	D80, T01, S01, S02, T02	

XIV DESCRIPTION OF HAZARDOUS WASTES

EPA CODE	CHARACTERISTIC OR CONTAMINANT	ESTIMATED ANNUAL QUANTITY OF WASTE	UNIT OF MEASURE	PROCESS CODES	PROCESS DESCRIPTION
U021	[1,1'-Biphenyl]-4,4'-diamine, Benzidine	42,120	T	D80, T01, S01, S02, T02	
U022	Benzo[a]pyrene	42,120	T	D80, T01, S01, S02, T02	
U023	Benzotrichloride, Benzene, (trichloromethyl)-	42,120	T	D80, T01, S01, S02, T02	
U024	Dichloromethoxy ethane, Ethane, 1,1'-[methylenebis(oxy)]bis[2-chloro-	42,120	T	D80, T01, S01, S02, T02	
U025	Ethane, 1,1'-oxybis[2-chloro-, Dichloroethyl ether	42,120	T	D80, T01, S01, S02, T02	
U026	Chlornaphazin, Naphthalenamine, N,N'-bis(2-chloroethyl)-	42,120	T	D80, T01, S01, S02, T02	
U027	Dichloroisopropyl ether, Propane, 2,2'-oxybis[2-chloro-	42,120	T	D80, T01, S01, S02, T02	
U028	1,2-Benzenedicarboxylic acid, bis(2-ethylhexyl) ester, Diethylhexyl phthalate	42,120	T	D80, T01, S01, S02, T02	
U029	Methane, bromo-, Methyl bromide	42,120	T	D80, T01, S01, S02, T02	
U030	Benzene, 1-bromo-4-phenoxy-, 4-Bromophenyl phenyl ether	42,120	T	D80, T01, S01, S02, T02	
U031	n-Butyl alcohol, 1-Butanol	42,120	T	D80, T01, S01, S02, T02	
U032	Calcium chromate, Chromic acid H_2CrO_4, calcium salt	42,120	T	D80, T01, S01, S02, T02	
U033	Carbon oxyfluoride, Carbonic difluoride	42,120	T	D80, T01, S01, S02, T02	
U034	Chloral, Acetaldehyde, trichloro-	42,120	T	D80, T01, S01, S02, T02	
U035	Chlorambucil, Benzenebutanoic acid, 4-[bis(2-chloroethyl)amino]-	42,120	T	D80, T01, S01, S02, T02	
U036	Chlordane, alpha & gamma isomers, 4,7-Methano-1H-indene, 1,2,4,5,6,7,8,8-octachloro-2,3,3a,4,7,7a-hexahydro-	42,120	T	D80, T01, S01, S02, T02	
U037	Benzene, chloro-, Chlorobenzene	42,120	T	D80, T01, S01, S02, T02	
U038	Chlorobenzilate, Benzeneacetic acid, 4-chloro-alpha-(4-chlorophenyl)-al- pha-hydroxy-, ethyl ester	42,120	T	D80, T01, S01, S02, T02	
U039	p-Chloro-m-cresol, Phenol, 4-chloro-3-methyl-	42,120	T	D80, T01, S01, S02, T02	
U041	Epichlorohydrin, Oxirane, (chloromethyl)-	42,120	T	D80, T01, S01, S02, T02	

XIV DESCRIPTION OF HAZARDOUS WASTES

EPA CODE	CHARACTERISTIC OR CONTAMINANT	ESTIMATED ANNUAL QUANTITY OF WASTE	UNIT OF MEASURE	PROCESS CODES	PROCESS DESCRIPTION
U042	Ethene, (2-chloroethoxy)-, 2-Chloroethyl vinyl ether	42,120	T	D80, T01, S01, S02, T02	
U043	Ethene, chloro-, Vinyl chloride	42,120	T	D80, T01, S01, S02, T02	
U044	Chloroform, Methane, trichloro-	42,120	T	D80, T01, S01, S02, T02	
U045	Methane, chloro-, Methyl chloride	42,120	T	D80, T01, S01, S02, T02	
U046	Chloromethyl methyl ether, Methane, chloromethoxy-	42,120	T	D80, T01, S01, S02, T02	
U047	beta-Chloronaphthalene, Naphthalene, 2-chloro-	42,120	T	D80, T01, S01, S02, T02	
U048	o-Chlorophenol, Phenol, 2-chloro-	42,120	T	D80, T01, S01, S02, T02	
U049	4-Chloro-o-toluidine, hydrochloride, Benzenamine, 4-chloro-2-methyl-, hydrochloride	42,120	T	D80, T01, S01, S02, T02	
U050	Chrysene	42,120	T	D80, T01, S01, S02, T02	
U051	Creosote	42,120	T	D80, T01, S01, S02, T02	
U052	Cresol (Cresylic acid), Phenol, methyl-	42,120	T	D80, T01, S01, S02, T02	
U053	Crotonaldehyde, 2-Butenal	42,120	T	D80, T01, S01, S02, T02	
U055	Benzene, (1-methylethyl)-, Cumene	42,120	T	D80, T01, S01, S02, T02	
U056	Cyclohexane, Benzene, hexahydro-	42,120	T	D80, T01, S01, S02, T02	
U057	Cyclohexanone	42,120	T	D80, T01, S01, S02, T02	
U058	Cyclophosphamide, 2H-1,3,2-Oxazaphosphorin-2-amine,...N,N-bis(2-chloroethyl) tetrahydro-, 2-oxide	42,120	T	D80, T01, S01, S02, T02	
U059	5,12-Naphthacenedione, 8-acetyl-10- [(3-amino-2,3,6-tride-oxy)-alpha-L-lyxo-hexopyranosyl)oxy]-7,8,9,10-tetrahydro-6,8,11-trihydroxy-1-methoxy-, (8S-cis)-, Daunomycin	42,120	T	D80, T01, S01, S02, T02	
U060	DDD, Benzene, 1,1'-(2,2-dichloroethylidene)bis [4-chloro-	42,120	T	D80, T01, S01, S02, T02	
U061	DDT, Benzene, 1,1'-(2,2,2-trichloroethylidene)bis [4-chloro-	42,120	T	D80, T01, S01, S02, T02	
U062	Diallate, Carbamothioic acid, bis(1-methylethyl)-, S-(2,3-dichloro-2-propenyl) ester	42,120	T	D80, T01, S01, S02, T02	

XIV DESCRIPTION OF HAZARDOUS WASTES

EPA CODE	CHARACTERISTIC OR CONTAMINANT	ESTIMATED ANNUAL QUANTITY OF WASTE	UNIT OF MEASURE	PROCESS CODES	PROCESS DESCRIPTION
U063	Dibenz[a,h]anthracene	42,120	T	D80, T01, S01, S02, T02	
U064	Benzo[rst]pentaphene, Dibenzo[a,i]pyrene	42,120	T	D80, T01, S01, S02, T02	
U066	1,2-Dibromo-3-chloropropane, Propane, 1,2-dibromo-3-chloro-	42,120	T	D80, T01, S01, S02, T02	
U067	Ethane, 1,2-dibromo-, Ethylene dibromide	42,120	T	D80, T01, S01, S02, T02	
U068	Methane, dibromo-, Methylene bromide	42,120	T	D80, T01, S01, S02, T02	
U069	Dibutyl phthalate, 1,2-Benzenedicarboxylic acid, dibutyl ester	42,120	T	D80, T01, S01, S02, T02	
U070	o-Dichlorobenzene, Benzene, 1,2-dichloro-	42,120	T	D80, T01, S01, S02, T02	
U071	m-Dichlorobenzene, Benzene, 1,3-dichloro-	42,120	T	D80, T01, S01, S02, T02	
U072	Benzene, 1,4-dichloro-, p-Dichlorobenzene	42,120	T	D80, T01, S01, S02, T02	
U073	3,3'-Dichlorobenzidine, [1,1'-Biphenyl]-4,4'-diamine, 3,3'-dichloro-	42,120	T	D80, T01, S01, S02, T02	
U074	1,4-Dichloro-2-butene, 2-Butene, 1,4-dichloro-	42,120	T	D80, T01, S01, S02, T02	
U075	Methane, dichlorodifluoro-, Dichlorodifluoromethane	42,120	T	D80, T01, S01, S02, T02	
U076	Ethylidene dichloride, Ethane, 1,1-dichloro-	42,120	T	D80, T01, S01, S02, T02	
U077	Ethylene dichloride, Ethane, 1,2-dichloro-	42,120	T	D80, T01, S01, S02, T02	
U078	1,1-Dichloroethylene, Ethene, 1,1-dichloro-	42,120	T	D80, T01, S01, S02, T02	
U079	1,2-Dichloroethylene, Ethene, 1,2-dichloro-, (E)-	42,120	T	D80, T01, S01, S02, T02	
U080	Methane, dichloro-, Methylene chloride	42,120	T	D80, T01, S01, S02, T02	
U081	2,4-Dichlorophenol, Phenol, 2,4-dichloro-	42,120	T	D80, T01, S01, S02, T02	
U082	2,6-Dichlorophenol, Phenol, 2,6-dichloro-	42,120	T	D80, T01, S01, S02, T02	
U083	Propane, 1,2-dichloro-, Propylene dichloride	42,120	T	D80, T01, S01, S02, T02	
U084	1,3-Dichloropropene, 1-Propene, 1,3-dichloro-	42,120	T	D80, T01, S01, S02, T02	

XIV DESCRIPTION OF HAZARDOUS WASTES

EPA CODE	CHARACTERISTIC OR CONTAMINANT	ESTIMATED ANNUAL QUANTITY OF WASTE	UNIT OF MEASURE	PROCESS CODES	PROCESS DESCRIPTION
U085	2,2'-Bioxirane, 1,2:3,4-Diepoxybutane	42,120	T	D80, T01, S01, S02, T02	
U086	N,N'-Diethylhydrazine, Hydrazine, 1,2-diethyl-	42,120	T	D80, T01, S01, S02, T02	
U087	O,O-Diethyl S-methyl dithiophosphate, Phosphorodithioic acid, O,O-diethyl S-methyl ester	42,120	T	D80, T01, S01, S02, T02	
U088	Diethyl phthalate, 1,2-Benzenedicarboxylic acid, diethyl ester	42,120	T	D80, T01, S01, S02, T02	
U089	Diethylstilbesterol, Phenol, 4,4'-(1,2-diethyl-1,2-ethenediyl)bis-, (E)-	42,120	T	D80, T01, S01, S02, T02	
U090	Dihydrosafrole, 1,3-Benzodioxole, 5-propyl-	42,120	T	D80, T01, S01, S02, T02	
U091	[1,1'-Biphenyl]-4,4'-diamine, 3,3'-dimethoxy-, 3,3'-Dimethoxybenzidine	42,120	T	D80, T01, S01, S02, T02	
U092	Methanamine, N-methyl-, Dimethylamine	42,120	T	D80, T01, S01, S02, T02	
U093	p-Dimethylaminoazobenzene, Benzenamine, N,N-dimethyl-4-(phenylazo)-	42,120	T	D80, T01, S01, S02, T02	
U094	Benz[a]anthracene, 7,12-dimethyl-, 7,12-Dimethylbenz[a]anthracene	42,120	T	D80, T01, S01, S02, T02	
U095	[1,1'-Biphenyl]-4,4'-diamine, 3,3'-dimethyl-, 3,3'-Dimethylbenzidine, 233,3'-Dimethylbenzidine	42,120	T	D80, T01, S01, S02, T02	
U096	Hydroperoxide, 1-methyl-1-phenylethyl-, alpha,alpha-Dimethylbenzylhydroperoxide	42,120	T	D80, T01, S01, S02, T02	
U097	Carbamic chloride, dimethyl-, Dimethylcarbamoyl chloride	42,120	T	D80, T01, S01, S02, T02	
U098	1,1-Dimethylhydrazine, Hydrazine, 1,1-dimethyl-	42,120	T	D80, T01, S01, S02, T02	
U099	Hydrazine, 1,2-dimethyl-, 1,2-Dimethylhydrazine	42,120	T	D80, T01, S01, S02, T02	
U101	2,4-Dimethylphenol, Phenol, 2,4-dimethyl-	42,120	T	D80, T01, S01, S02, T02	
U102	1,2-Benzenedicarboxylic acid, dimethyl ester, Dimethyl phthalate	42,120	T	D80, T01, S01, S02, T02	
U103	Dimethyl sulfate, Sulfuric acid, dimethyl ester	42,120	T	D80, T01, S01, S02, T02	
U105	Benzene, 1-methyl-2,4-dinitro-, 2,4-Dinitrotoluene	42,120	T	D80, T01, S01, S02, T02	
U106	2,6-Dinitrotoluene, Benzene, 2-methyl-1,3-dinitro-	42,120	T	D80, T01, S01, S02, T02	
U107	Di-n-octyl phthalate, 1,2-Benzenedicarboxylic acid, dioctyl ester	42,120	T	D80, T01, S01, S02, T02	

XIV DESCRIPTION OF HAZARDOUS WASTES

EPA CODE	CHARACTERISTIC OR CONTAMINANT	ESTIMATED ANNUAL QUANTITY OF WASTE	UNIT OF MEASURE	PROCESS CODES	PROCESS DESCRIPTION
U108	1,4-Dioxane, 1,4-Diethyleneoxide	42,120	T	D80, T01, S01, S02, T02	
U109	1,2-Diphenylhydrazine, Hydrazine, 1,2-diphenyl-	42,120	T	D80, T01, S01, S02, T02	
U110	Dipropylamine, 1-Propanamine, N-propyl-	42,120	T	D80, T01, S01, S02, T02	
U111	Di-n-propylnitrosamine, 1-Propanamine, N-nitroso-N-propyl-	42,120	T	D80, T01, S01, S02, T02	
U112	Acetic acid ethyl ester, Ethyl acetate	42,120	T	D80, T01, S01, S02, T02	
U113	Ethyl acrylate, 2-Propenoic acid, ethyl ester	42,120	T	D80, T01, S01, S02, T02	
U114	Ethylenebisdithiocarbamic acid, salts & esters, Carbamodithioic acid, 1,2-ethanediylbis-,...salts & esters	42,120	T	D80, T01, S01, S02, T02	
U115	Ethylene oxide, Oxirane	42,120	T	D80, T01, S01, S02, T02	
U116	Ethylenethiourea, 2-Imidazolidinethione	42,120	T	D80, T01, S01, S02, T02	
U117	Ethyl ether, Ethane, 1,1'-oxybis-	42,120	T	D80, T01, S01, S02, T02	
U118	Ethyl methacrylate, 2-Propenoic acid, 2-methyl-, ethyl ester	42,120	T	D80, T01, S01, S02, T02	
U119	Ethyl methanesulfonate, Methanesulfonic acid, ethyl ester	42,120	T	D80, T01, S01, S02, T02	
U120	Fluoranthene	42,120	T	D80, T01, S01, S02, T02	
U121	Methane, trichlorofluoro-, Trichloromonofluoromethane	42,120	T	D80, T01, S01, S02, T02	
U122	Formaldehyde	42,120	T	D80, T01, S01, S02, T02	
U123	Formic acid	42,120	T	D80, T01, S01, S02, T02	
U124	Furfuran, Furan	42,120	T	D80, T01, S01, S02, T02	
U125	2-Furancarboxaldehyde, Furfural	42,120	T	D80, T01, S01, S02, T02	
U126	Glycidylaldehyde, Oxiranecarboxyaldehyde	42,120	T	D80, T01, S01, S02, T02	
U127	Benzene, hexachloro-, Hexachlorobenzene	42,120	T	D80, T01, S01, S02, T02	
U128	1,3-Butadiene, 1,1,2,3,4,4-hexachloro-, Hexachlorobutadiene	42,120	T	D80, T01, S01, S02, T02	

XIV DESCRIPTION OF HAZARDOUS WASTES

EPA CODE	CHARACTERISTIC OR CONTAMINANT	ESTIMATED ANNUAL QUANTITY OF WASTE	UNIT OF MEASURE	PROCESS CODES	PROCESS DESCRIPTION
U129	Lindane, Cyclohexane, 1,2,3,4,5,6-hexachloro-, (1al- pha,2alpha,3beta,4alpha,5alpha,6beta)-	42,120	T	D80, T01, S01, S02, T02	
U130	Hexachlorocyclopentadiene, 1,3-Cyclopentadiene, 1,2,3,4,5,5-hexachloro-	42,120	T	D80, T01, S01, S02, T02	
U131	Hexachloroethane, Ethane, hexachloro-	42,120	T	D80, T01, S01, S02, T02	
U132	Hexachlorophene, Phenol, 2,2'-methylenebis[3,4,6-trichloro-	42,120	T	D80, T01, S01, S02, T02	
U133	Hydrazine	42,120	T	D80, T01, S01, S02, T02	
U134	Hydrogen fluoride, Hydrofluoric acid	42,120	T	D80, T01, S01, S02, T02	
U135	Hydrogen sulfide H_2S, Hydrogen sulfide	42,120	T	D80, T01, S01, S02, T02	
U136	Cacodylic acid, Arsinic acid, dimethyl-	42,120	T	D80, T01, S01, S02, T02	
U137	Indeno[1,2,3-cd]pyrene	42,120	T	D80, T01, S01, S02, T02	
U138	Methane, iodo-, Methyl iodide	42,120	T	D80, T01, S01, S02, T02	
U140	Isobutyl alcohol, 1-Propanol,	42,120	T	D80, T01, S01, S02, T02	
U141	Isosafrole, 1,3-Benzodioxole, 5-(1-propenyl)-	42,120	T	D80, T01, S01, S02, T02	
U142	Kepone, 1,3,4-Metheno-2H-cyclobuta [cd]pentalen-2-one, 1,1a,3,3a,4,5,5,5a,5b,6-decachlorooctahydro-U	42,120	T	D80, T01, S01, S02, T02	
U143	Lasiocarpine, 2-Butenoic acid, 2-methyl-, 7-{ [2,3-dihydroxy-...2-(1-methoxyethyl)-3-methyl-1-oxobutoxy]methyl}-...2,3,5,7 a-t etrahydro-1H-pyrrolizin-1-yl ester,...[1S-[1al-pha(Z),7(2S*,3R*),7aalpha]]-	42,120	T	D80, T01, S01, S02, T02	
U144	Lead acetate, Acetic acid, lead(2+) salt	42,120	T	D80, T01, S01, S02, T02	
U145	Lead phosphate, Phosphoric acid, lead(2+) salt (2:3)	42,120	T	D80, T01, S01, S02, T02	
U146	Lead, bis(acetato-O)tetrahydroxytri-, Lead subacetate	42,120	T	D80, T01, S01, S02, T02	
U147	Maleic anhydride, 2,5-Furandione	42,120	T	D80, T01, S01, S02, T02	
U148	Maleic hydrazide, 3,6-Pyridazinedione, 1,2-dihydro-	42,120	T	D80, T01, S01, S02, T02	
U149	Malononitrile, Propanedinitrile	42,120	T	D80, T01, S01, S02, T02	

XIV DESCRIPTION OF HAZARDOUS WASTES

EPA CODE	CHARACTERISTIC OR CONTAMINANT	ESTIMATED ANNUAL QUANTITY OF WASTE	UNIT OF MEASURE	PROCESS CODES	PROCESS DESCRIPTION
U150	Melphalan, L-Phenylalanine, 4-[bis(2-chloroethyl)amino]-	42,120	T	D80, T01, S01, S02, T02	
U151	Mercury	42,120	T	D80, T01, S01, S02, T02	
U152	Methacrylonitrile, 2-Propenenitrile, 2-methyl-	42,120	T	D80, T01, S01, S02, T02	
U153	Methanethiol, Thiomethanol	42,120	T	D80, T01, S01, S02, T02	
U154	Methyl alcohol, Methanol	42,120	T	D80, T01, S01, S02, T02	
U155	Methapyrilene, 1,2-Ethanediamine, N,N-dimethyl-N'-2-pyridinyl-N'-(2- thienylmethyl)-	42,120	T	D80, T01, S01, S02, T02	
U156	Methyl chlorocarbonate, Carbonochloridic acid, methyl ester	42,120	T	D80, T01, S01, S02, T02	
U157	3-Methylcholanthrene, Benz[j]aceanthrylene, 1,2-dihydro-3-methyl-	42,120	T	D80, T01, S01, S02, T02	
U158	4,4'-Methylenebis(2-chloroaniline), Benzenamine, 4,4'-methylenebis[2-chloro-	42,120	T	D80, T01, S01, S02, T02	
U159	Methyl ethyl ketone (MEK), 2-Butanone	42,120	T	D80, T01, S01, S02, T02	
U160	2-Butanone, peroxide, Methyl ethyl ketone peroxide	42,120	T	D80, T01, S01, S02, T02	
U161	4-Methyl-2-pentanone, Methyl isobutyl ketone, Pentanol, 4-methyl-	42,120	T	D80, T01, S01, S02, T02	
U161		42,120	T	D80, T01, S01, S02, T02	
U162	Methyl methacrylate, 2-Propenoic acid, 2-methyl-, methyl ester	42,120	T	D80, T01, S01, S02, T02	
U163	MNNG, Guanidine, N-methyl-N'-nitro-N-nitroso-	42,120	T	D80, T01, S01, S02, T02	
U164	Methylthiouracil, 4(1H)-Pyrimidinone, 2,3-dihydro-6-methyl-2-thioxo-	42,120	T	D80, T01, S01, S02, T02	
U165	Naphthalene	42,120	T	D80, T01, S01, S02, T02	
U166	1,4-Naphthalenedione, 1,4-Naphthoquinone	42,120	T	D80, T01, S01, S02, T02	
U167	1-Naphthalenamine, alpha-Naphthylamine	42,120	T	D80, T01, S01, S02, T02	
U168	beta-Naphthylamine, 2-Naphthalenamine	42,120	T	D80, T01, S01, S02, T02	
U169	Nitrobenzene, Benzene, nitro-	42,120	T	D80, T01, S01, S02, T02	

XIV DESCRIPTION OF HAZARDOUS WASTES

EPA CODE	CHARACTERISTIC OR CONTAMINANT	ESTIMATED ANNUAL QUANTITY OF WASTE	UNIT OF MEASURE	PROCESS CODES	PROCESS DESCRIPTION
U170	p-Nitrophenol, Phenol, 4-nitro-	42,120	T	D80, T01, S01, S02, T02	
U171	Propane, 2-nitro-, 2-Nitropropane	42,120	T	D80, T01, S01, S02, T02	
U172	1-Butanamine, N-butyl-N-nitroso-, N-Nitrosodi-n-butylamine	42,120	T	D80, T01, S01, S02, T02	
U173	Ethanol, 2,2'-(nitrosoimino)bis-, N-Nitrosodiethanolamine	42,120	T	D80, T01, S01, S02, T02	
U174	Ethanamine, N-ethyl-N-nitroso-, N-Nitrosodiethylamine	42,120	T	D80, T01, S01, S02, T02	
U176	N-Nitroso-N-ethylurea, Urea, N-ethyl-N-nitroso-	42,120	T	D80, T01, S01, S02, T02	
U177	Urea, N-methyl-N-nitroso-, N-Nitroso-N-methylurea	42,120	T	D80, T01, S01, S02, T02	
U178	Carbamic acid, methylnitroso-, ethyl ester, N-Nitroso-N-methylurethane	42,120	T	D80, T01, S01, S02, T02	
U179	N-Nitrosopiperidine, Piperidine, 1-nitroso-	42,120	T	D80, T01, S01, S02, T02	
U180	N-Nitrosopyrrolidine, Pyrrolidine, 1-nitroso-	42,120	T	D80, T01, S01, S02, T02	
U181	Benzenamine, 2-methyl-5-nitro-, 5-Nitro-o-toluidine	42,120	T	D80, T01, S01, S02, T02	
U182	Paraldehyde, 1,3,5-Trioxane, 2,4,6-trimethyl-	42,120	T	D80, T01, S01, S02, T02	
U183	Benzene, pentachloro-, Pentachlorobenzene	42,120	T	D80, T01, S01, S02, T02	
U184	Ethane, pentachloro-, Pentachloroethane	42,120	T	D80, T01, S01, S02, T02	
U185	Benzene, pentachloronitro-, Pentachloronitrobenzene (PCNB)	42,120	T	D80, T01, S01, S02, T02	
U186	1-Methylbutadiene, 1,3-Pentadiene	42,120	T	D80, T01, S01, S02, T02	
U187	Acetamide, N-(4-ethoxyphenyl)-, Phenacetin	42,120	T	D80, T01, S01, S02, T02	
U188	Phenol	42,120	T	D80, T01, S01, S02, T02	
U189	Sulfur phosphide, Phosphorus sulfide	42,120	T	D80, T01, S01, S02, T02	
U190	1,3-Isobenzofurandione, Phthalic anhydride	42,120	T	D80, T01, S01, S02, T02	
U191	2-Picoline2-methyl-, Pyridine, 2-methyl-	42,120	T	D80, T01, S01, S02, T02	

XIV DESCRIPTION OF HAZARDOUS WASTES

EPA CODE	CHARACTERISTIC OR CONTAMINANT	ESTIMATED ANNUAL QUANTITY OF WASTE	UNIT OF MEASURE	PROCESS CODES	PROCESS DESCRIPTION
U192	Benzamide, 3,5-dichloro-N-(1,1-dimethyl-2-propynyl)-, Pronamide	42,120	T	D80, T01, S01, S02, T02	
U193	1,2-Oxathiolane, 2,2-dioxide, 1,3-Propane sultone	42,120	T	D80, T01, S01, S02, T02	
U194	n-Propylamine, 1-Propanamine	42,120	T	D80, T01, S01, S02, T02	
U196	Pyridine	42,120	T	D80, T01, S01, S02, T02	
U197	2,5-Cyclohexadiene-1,4-dione, p-Benzoquinone	42,120	T	D80, T01, S01, S02, T02	
U200	Reserpine, Yohimban-16-carboxylic acid, 11,17-dimethoxy-18- [(3,4,5-trimethoxybenzoyl)oxy]-, methyl ester, (3be- ta,16beta,17alpha,18beta,20alpha)-	42,120	T	D80, T01, S01, S02, T02	
U201	1,3-Benzenediol, Resorcinol	42,120	T	D80, T01, S01, S02, T02	
U202	1,2-Benzisothiazol-3(2H)-one, 1,1-dioxide, & salts, Saccharin, & salts	42,120	T	D80, T01, S01, S02, T02	
U203	1,3-Benzodioxole, 5-(2-propenyl)-, Safrole	42,120	T	D80, T01, S01, S02, T02	
U204	Selenium dioxide, Selenious acid	42,120	T	D80, T01, S01, S02, T02	
U205	Selenium sulfide, Selenium sulfide SeS_2	42,120	T	D80, T01, S01, S02, T02	
U206	D-Glucose, 2-deoxy-2-[[(methylnitrosoamino)-...carbonyl]amino]-, Glucopyranose, 2-deoxy-2-(3-methyl-3-nitrosoureido)-, D-, Streptozotocin	42,120	T	D80, T01, S01, S02, T02	
U207	Benzene, 1,2,4,5-tetrachloro-, 1,2,4,5-Tetrachlorobenzene	42,120	T	D80, T01, S01, S02, T02	
U208	Ethane, 1,1,1,2-tetrachloro-, 1,1,1,2-Tetrachloroethane	42,120	T	D80, T01, S01, S02, T02	
U209	Ethane, 1,1,2,2-tetrachloro-, 1,1,2,2-Tetrachloroethane	42,120	T	D80, T01, S01, S02, T02	
U210	Ethene, tetrachloro-, Tetrachloroethylene	42,120	T	D80, T01, S01, S02, T02	
U211	Carbon tetrachloride, Methane, tetrachloro-	42,120	T	D80, T01, S01, S02, T02	
U213	Furan, tetrahydro-, Tetrahydrofuran	42,120	T	D80, T01, S01, S02, T02	
U214	Acetic acid, thallium(1+) salt, Thallium(I) acetate	42,120	T	D80, T01, S01, S02, T02	
U215	Carbonic acid, dithallium(1+) salt, Thallium(I) carbonate	42,120	T	D80, T01, S01, S02, T02	

XIV DESCRIPTION OF HAZARDOUS WASTES

EPA CODE	CHARACTERISTIC OR CONTAMINANT	ESTIMATED ANNUAL QUANTITY OF WASTE	UNIT OF MEASURE	PROCESS CODES	PROCESS DESCRIPTION
U216	Thallium(I) chloride, Thallium chloride Tlcl	42,120	T	D80, T01, S01, S02, T02	
U217	Nitric acid, thallium(1+) salt, Thallium(I) nitrate	42,120	T	D80, T01, S01, S02, T02	
U218	Ethanethioamide, Thioacetamide	42,120	T	D80, T01, S01, S02, T02	
U219	Thiourea	42,120	T	D80, T01, S01, S02, T02	
U220	Benzene, methyl-, Toluene	42,120	T	D80, T01, S01, S02, T02	
U221	Benzenediamine, ar-methyl-, Toluenediamine	42,120	T	D80, T01, S01, S02, T02	
U222	Benzenamine, 2-methyl-, hydrochloride, o-Toluidine hydrochloride	42,120	T	D80, T01, S01, S02, T02	
U223	Benzene, 1,3-diisocyanatomethyl-, Toluene diisocyanate	42,120	T	D80, T01, S01, S02, T02	
U225	Bromoform, Methane, tribromo-	42,120	T	D80, T01, S01, S02, T02	
U226	Ethane, 1,1,1-trichloro-, Methyl chloroform	42,120	T	D80, T01, S01, S02, T02	
U227	Ethane, 1,1,2-trichloro-, 1,1,2-Trichloroethane	42,120	T	D80, T01, S01, S02, T02	
U228	Ethene, trichloro-, Trichloroethylene	42,120	T	D80, T01, S01, S02, T02	
U234	Benzene, 1,3,5-trinitro-, 1,3,5-Trinitrobenzene	42,120	T	D80, T01, S01, S02, T02	
U235	Tris(2,3-dibromopropyl) phosphate, 1-Propanol, 2,3-dibromo-, phosphate (3:1)	42,120	T	D80, T01, S01, S02, T02	
U236	2,7-Naphthalenedisulfonic acid, 3,3'-[(3,3'-dimethyl [1,1'-biphenyl]-4,4'-diyl)bis(azo)bis [5-amino-4-hydroxy]-, tetrasodium salt, Trypan blue	42,120	T	D80, T01, S01, S02, T02	
U237	Uracil mustard, 2,4-(1H,3H)-Pyrimidinedione, 5-[bis(2-chl oroethyl)amino]-	42,120	T	D80, T01, S01, S02, T02	
U238	Ethyl carbamate (urethane), Carbamic acid, ethyl ester	42,120	T	D80, T01, S01, S02, T02	
U239	Benzene, dimethyl-, Xylene	42,120	T	D80, T01, S01, S02, T02	
U240	2,4-D, salts & esters, Acetic acid, (2,4-dichlorophenoxy)-, salts & esters	42,120	T	D80, T01, S01, S02, T02	
U243	Hexachloropropene, 1-Propene, 1,1,2,3,3,3-hexachloro-	42,120	T	D80, T01, S01, S02, T02	

XIV DESCRIPTION OF HAZARDOUS WASTES

EPA CODE	CHARACTERISTIC OR CONTAMINANT	ESTIMATED ANNUAL QUANTITY OF WASTE	UNIT OF MEASURE	PROCESS CODES	PROCESS DESCRIPTION
U244	Thioperoxydicarbonic diamide $[(H_2N)C(S)]_2S_2$, tetramethyl-, Thiram	42,120	T	D80, T01, S01, S02, T02	
U246	Cyanogen bromide (CN)Br	42,120	T	D80, T01, S01, S02, T02	
U247	Methoxychlor, Benzene, 1,1'-(2,2,2-trichloroethylidene)bis [4-methoxy-	42,120	T	D80, T01, S01, S02, T02	
U248	2H-1-Benzopyran-2-one, 4-hydroxy-3-(3-oxo-1-phenylbutyl)-, & salts, when present at concentrations of 0.3% or less, Warfarin, & salts, when present at concentrations of 0.3% or less	42,120	T	D80, T01, S01, S02, T02	
U249	Zinc phosphide Zn_3P_2, when present at concentrations of 10% or less	42,120	T	D80, T01, S01, S02, T02	
U328	Benzenamine, 2-methyl-, o-Toluidine	42,120	T	D80, T01, S01, S02, T02	
U353	Benzenamine, 4-methyl-, p-Toluidine	42,120	T	D80, T01, S01, S02, T02	
U359	Ethylene glycol monoethyl ether, Ethanol, 2-ethoxy-	42,120	T	D80, T01, S01, S02, T02	

TO VIEW THE MAP AND/OR MAPS WITH THIS DOCUMENT, PLEASE CALL THE HAZARDOUS WASTE BUREAU AT 505-476-6000 TO MAKE AN APPOINTMENT

Part

B

PART B

1.0 GENERAL FACILITY STANDARDS

This section provides a general description of the Triassic Park Waste Disposal Facility (Facility), including waste management practices, site environment and climate, location information, emergency management, and traffic patterns. A summary of the complete permit application follows.

Part A and Part B of the permit application are included in the two volumes described below.

- *Volume I* - Part A and Part B (Text and Figures)
- *Volume II* – Part B Appendices A - M

Supporting documentation for Part B is provided in four additional volumes. These volumes present the engineering report and associated appendices as outlined below.

- *Volume III* - Engineering Report Text and Appendix A (Design Drawings)
- *Volume IV* - Appendix B (Construction Quality Assurance Plan) and Appendix C (Construction Specifications)
- *Volume V* - Appendix D (Laboratory Data) and Appendix E (Engineering Calculations)
- *Volume VI* - Appendix E (cont.), Appendix F (Surface Water Design), and Appendix G (Action Leakage Rate and Response Action Plan)

This is considered a complete submittal and supersedes all previous submittals.

1.1 GENERAL DESCRIPTION

The Facility will be a full-service Resource Conservation and Recovery Act (RCRA) Subtitle C waste treatment, storage, and disposal operation. The Facility will be located in Southeastern New Mexico on approximately 480 acres of privately owned land in Chaves County, New Mexico (see Figure 1-1 at the end of this section). By road, this location is approximately 43 miles east of Roswell and 36 miles west of Tatum, as shown on Figure 1-2. Hazardous wastes which may be placed in the evaporation pond include all wastes listed in Part A of the application, provided that Land Disposal Restriction (LDR) standards are met prior to placing the wastes in the evaporation pond. All waste placed in the evaporation pond at the Facility will meet LDR standards prior to disposal. The Facility will accept Toxic Substances Control Act (TSCA)-regulated polychlorinated biphenyl (PCB) wastes but only at concentrations of less than 50 parts per million (ppm). The Facility will offer the following RCRA-regulated services, which are described in this permit application.

1.1.1 Treatment

Two treatment processes will be used at the Facility, including an evaporation pond for managing wastewaters that meet LDR standards and a stabilization process for treating liquids, sludges, and solids to ensure that no free liquids are present and that LDR standards are met prior to placing wastes in the landfill. Dilution of restricted waste will not be used as a substitute for adequate treatment. All stabilized wastes will be tested, as a final step in the stabilization process, to ensure that no free liquids are present. The Paint Filter Liquids Test, U.S. Environmental Protection Agency (EPA) Method 9095, will be used to make this evaluation. Prior to treating wastes in the stabilization unit, waste characteristics will be analyzed to ensure that proper measures can be taken to safely manage ignitable, reactive, and incompatible wastes. Procedures for properly identifying and verifying ignitable, reactive, and incompatible wastes are described in Section 4.3.2.1. Once these wastes are identified, they will be managed in accordance with applicable regulatory requirements and permit conditions (see Section 5.5).

Two container storage areas (roll-off storage area and drum handling unit) will be used to stage waste at the Facility for treatment or disposal. These units will ensure that waste is stored in compliance with RCRA requirements for permitted storage. Neither of the units will be used for long-term storage of waste. All containers being stored will be clearly marked with hazardous waste labels which identify the contents of each container as well as the date of receipt (accumulation date). All labels will be clearly visible while containers are being stored. All containers will remain closed during storage, except when waste is removed or added. Further, container storage and handling procedures will be developed to ensure that containers are not opened, handled, or stored in a manner that may cause them to rupture or leak.

1.1.2 Liquid Waste Storage

Four aboveground storage tanks will be utilized to accumulate regulated bulk liquid hazardous wastes prior to stabilization. Handling of reactive materials, tank corrosion, tank assessments, tank inspection and tightness testing, and repair and certification of tank systems is discussed in Section 5.0. Description of contents, quantity of hazardous waste received, and the date each period of accumulation begins will be documented for each storage tank. This documentation may be comprised of clearly visible labels on storage tanks or of descriptions in the Facility operating record or of both these elements. Design, dimensions, capacity, and other tank specifications are included in Volumes III and IV of this permit application.

1.1.3 Land Disposal

A landfill will be utilized for the disposal of waste that meets LDR standards. Support units and structures include a chemical laboratory, administration building, weigh scale area, maintenance shop, truck wash unit, clay processing area, clay liner material stock piles, daily cover stock piles, and a stormwater retention basin.

Because the Facility has not yet been constructed or operated, there are no solid waste management units (SWMUs) at this time. Satellite and/or 90-day accumulation areas may possibly be located at the chemical laboratory, the truck wash unit, and the maintenance shop. Other areas at the Facility that may be designated as SWMUs include the untarping, sampling, and weigh scales area, the truck staging area, and the stormwater retention basin. Detailed information on location, unit type and dimensions, and a structural description of these units is provided in the design of the Facility contained in Volumes III through VI of this application.

The future debris encapsulation area and the future waste processing area identified in the Facility layout are possible future RCRA treatment units envisioned for the Facility that are not being designed at this time. Prior to construction of these units, a RCRA permit modification request will be submitted.

1.1.4 Facility Name

Gandy Marley, Inc. (GMI) owns the Facility. The waste disposal operations covered by this permit will operate under the name of the Triassic Park Waste Disposal Facility.

1.1.5 Facility Contact

Larry Gandy, Vice President
Gandy Marley, Inc.
Tatum, New Mexico
505/398-4960

1.1.6 Facility Address

1109 East Broadway
P. O. Box 827
Tatum, New Mexico 88267

1.1.7 Purpose of Facility

The purpose of the Facility will be the treatment and permanent disposal of hazardous wastes in a manner protective of human health and the environment. Wastes that do not meet LDR standards will not be accepted for placement into the landfill or evaporation pond until appropriate treatment is performed. Infectious wastes and radioactive wastes will be prohibited at this Facility. The Waste Analysis Plan contains more details regarding wastes that can be accepted at the Facility and wastes that are prohibited.

1.1.8 Facility Location

The Facility will be located in Southeastern New Mexico on approximately 480 acres of privately owned land in Chaves County, New Mexico, Sections 17 and 18 of R31E, T11S (see Figure 1-1 at the end of this section). By road, this location is approximately 43 miles east of Roswell and 36 miles west of Tatum, as shown on Figure 1-2. The only major road in the vicinity is U.S. Highway 380, which runs east and west approximately 4 miles north of the proposed site. State Highway 172, which runs north and south, is approximately 4 miles east of the proposed site. State Highway 172 is not a major thoroughfare and does not provide access to the proposed site.

1.1.9 Hazardous Waste Generation

Some hazardous waste will be generated as a result of normal Facility operations. Various treatment and handling processes and support operations will likely generate such wastes. Examples of typical hazardous waste forms likely to be generated during normal Facility operations include solvents, oils, acids and bases, laboratory chemicals and equipment, paint and paint strippers, sludges, solvent contaminated solids, and personal protective equipment. Non-recyclable hazardous wastes will be disposed of onsite in accordance with the requirements outlined in Section 4.3.3.

1.1.10 Sanitary Waste Generation

Sanitary liquid wastes will be generated in most Facility buildings. This waste form consists primarily of shower water, janitorial wastes, rest room wastes, and liquid wastes generated from cleaning operations. Non-hazardous liquid wastes will be managed as sewage and disposed of accordingly.

1.1.11 Non-hazardous Refuse Generation

Non-hazardous municipal solid waste (MSW) and construction and demolition (C&D) waste will be generated during building and normal operations at the Facility. These wastes will include such things as cardboard packing containers, garbage, paper refuse, and construction debris. Collection, transportation, and disposal of non-recyclable waste will be contracted to a MSW and C&D waste disposal company. Recyclable wastes, such as office paper, will be sent off site for usable materials

recovery. The disposal of non-routine waste materials will be administratively controlled on a case-by-case basis in accordance with applicable regulatory requirements.

1.2 SITE ENVIRONMENT AND CLIMATE

The selected site for the Facility is on the western edge of a geological bench known locally as the Caprock. The Caprock is characterized by rocky terrain which runs north and south. Detailed information about the geologic characteristics of the site is contained in Section 3.0.

The site is approximately 4,150 feet above sea level. Climatic conditions of the area are typical of semi-arid regions and are characterized by dry, warm winters with minimal snow cover and hot, somewhat more moist summers. The frost-free season averages from 190 to 215 days per year. The mean annual soil temperature ranges from 59 to 65 degrees Fahrenheit. The average annual precipitation ranges from 10 to 13 inches. Winter precipitation usually consists of occasional snowfall from November through April. Snowfall typically melts within a short period of time. Most precipitation (approximately 80 percent of the annual total) occurs between June and September.

Normally, two-thirds of the summer days reach temperatures in excess of 90°F with maximum temperatures commonly 100°F or higher. Night temperatures during the winter months commonly fall below freezing, occasionally reaching below 0°F. The average annual temperature is 62°F.

The prevailing wind is from the south. Winds of up to 40 miles per hour are common during the spring and in association with summer thunderstorms.

Area vegetation consists primarily of Tobosa, Buffalo Grass, Vine-Mesquite, Mesquite, Cactus, Sand Dropseed, Little Bluestem, Sand Bluestem, Sandbur, Three-Awn, Shinnery Oak, Yucca, and Sand Sagebrush. According to the New Mexico Forestry and Resources Conservation Division of the State Department of Energy, Minerals, and Natural Resources, there are no rare or endangered plant species located in either Section 17 or 18.

According to the Bureau of Land Management (BLM) - Roswell Resource Area, there are 54 bird species, 33 species of mammals, and 36 species of reptiles and amphibians in what is designated as the Caprock Wildlife Habitat Area. The Facility location is within that wildlife habitat designation.

One bird species, the ferruginous hawk (*Buteo regalis*), is classified as a "Category 2" candidate for listing as threatened or endangered by the United States Fish and Wildlife Service of the U.S. Department of Interior. Currently, it is not listed. No other documented species in the area of the proposed Facility site are federally protected or candidates for federal protection.

The sand dune sagebrush lizard (*Sceloporus graciosus arenicolous*) is currently listed as a candidate for protection by the State of New Mexico. Population and habitat studies are ongoing for use by the state in determining whether to give the species protected status. The sand dune sagebrush lizard is not classified as a candidate for federal protection.

GMI will continue to monitor the existence of threatened or endangered species in the area. Should any threatened or endangered species be identified within the Facility area, GMI will take measures to ensure that these species are protected. GMI will implement protective measures for the wildlife population in the area. These measures include the use of restrictive fencing around the operational portions of the Facility and the use of protective netting over the evaporation pond.

1.3 LOCATION INFORMATION

A topographic map of the site has been developed from a 1997 aerial photograph and U.S. Geological Survey (USGS) 7.5 minute series map (Mescalero Point, New Mexico, 1973) and is presented in Volume III, Drawing 3. This drawing illustrates Facility boundaries, access roads, access control locations, internal roads, and site fences. The Facility layout is presented as Drawing 4 in Volume III of this application.

The site is located in eastern Chaves County, in an area that has historically been utilized primarily as range land for livestock grazing and for limited oil and gas activities. The residence nearest the site is owned by Marley Ranches, Ltd. and is located approximately 2.9 miles to the east-southeast. Land ownership for a 4-mile radius around the site is shown in Figure 1-1 at the end of this section. All of the residences within a ten-mile radius of the site are listed in Figure 1-3.

The site will encompass 480 acres and will be enclosed by a fence. Gates to the same height as the perimeter fence will be constructed. The area will be secured and monitored so that only authorized personnel or personnel being accompanied and supervised by authorized personnel are allowed onsite. Employees responsible for site security will be present at all times to prevent unauthorized entry and to report unusual events and/or emergencies. Site security personnel will be responsible for conducting regular inspections and routine maintenance of the perimeter area (see Section 5.0).

Land use plans and/or zoning maps have not been developed for Chaves County. All areas within the county, except those within municipal boundaries, are designated as Zone A (agricultural). The eastern half of the county is further designated as Area 1 and the western half as Area 2. Area 1 and Area 2 are zoning Land Use Areas, whose boundaries have been determined by a joint-powers agreement between the Board of Chaves County Commissioners and the Roswell City Council. Existing uses in Area 1 are livestock grazing, mineral exploration and production, wildlife habitat, and extensive recreation. Single-family dwellings require permits in Area 1. Area 2 covers an important part of the recharge area of the Roswell Artesian Basin. Existing uses in Area 2 are livestock grazing, mineral exploration and production, extensive recreation, wildlife habitat, and flood control structures and floodways. Any new parcels created in the area must be five acres or larger.

Approximately 2 miles northwest of the Facility location, the Mescalero Sands recreational "complex" has been established for use by off-road vehicles. The South Dunes area of Mescalero Sands has been designated as an "Outstanding Natural Area" (ONA) and is utilized by the public primarily for wildlife observation activities.

The land in the area of the Facility is used predominantly for grazing cattle and to a much lesser extent for oil and gas exploration activities. The nearest production well is 3 miles from the site. Additional information about the drilling activities in the area is contained in Section 3.0 of this document.

All abandoned wells in the area have been plugged in accordance with New Mexico Oil Conservation Division (OCD) regulations. These regulations require the use of mud-laden fluids, cement and plugs in the well "in a way to confine crude petroleum oil, natural gas, or water in the strata in which it is found and to prevent it from escaping into other strata." Surface reclamation of abandoned wells prevents surface water from entering and contaminating subsurface strata.

1.3.1 Flood Plain Information

Sections 17 and 18, T11S, R31E are included on Federal Insurance Rate Map #350125. This map has not been printed because the National Flood Insurance Program has determined that this is an area of minimal flood hazards. This information was provided to GMI by the Director of Planning and Environmental Services, Chaves County, New Mexico.

Additionally, rainfall run-off calculations were performed to determine whether the site falls within the flood plain of a 100-year, 24-hour storm event. Based on information in the Precipitation Frequency Atlas published by the National Oceanic and Atmospheric Association, a rainfall amount of 5.3 inches was used in the calculations. The nearest drainage to the site was determined from the USGS 7.5 minute series topographic map of the Mescalero Point Quadrangle (see Section 3.0). This drainage flows westerly from Mescalero Point, which is approximately three-quarters of a mile south of the site. Three cross-sections intercepted by the drainage were chosen in the vicinity of the site. The drainage areas for each stream section were measured using a planimeter.

Storm run-off flows were calculated for each area using the Rational Method. Run-off coefficients of 0.55 and 1.0 (no infiltration) were used in the calculations. Next, the maximum flow that could be accommodated by each cross-section of the stream channel was determined using the Manning formula for open channel flow. In each case, the results showed the 100-year, 24-hour storm flow to be less than 1 percent of the capacity of the channel section. It may be concluded from this comparison that a flood plain does not exist for the drainage and that there are no flood plains within 1 mile of the site. It may be further concluded that flood plain regulations are not applicable to this Facility.

1.3.2 Fire Control and Emergency Response

Fire control and emergency response will be the responsibility of the Emergency Coordinator (EC) who is on call or duty at the time of an incident. Each EC will be trained to handle emergencies and to notify appropriate authorities (see Section 7.0). Each EC will have the authority to commit resources necessary to implement the site Contingency Plan described in Section 6.0.

In addition to onsite emergency response capabilities, cooperative agreements will be established with local emergency response organizations in surrounding communities to respond to and assist in any emergencies that arise at the Facility (see Section 6.0).

1.4 TRAFFIC PATTERNS

The flow of traffic within the Facility boundary will not be significant except during shift changes. The number of employee vehicles will not be substantial enough to require elaborate signage or other traffic control systems. All personnel will be given written instructions that will caution them to be alert to other vehicles and pedestrians. Each vehicle must enter and exit through the security gate at the northeast corner of the perimeter of the Facility boundary. The arrival and departure of trucks transporting waste will not be scheduled during peak traffic times. Drawing 26, Sheet 2 in Volume III illustrates traffic flow patterns for the operations and waste processing area, traffic control signage and truck staging areas.

1.4.1 Traffic Control

Access to the Facility will be gained through the security gate at the northeast corner of the perimeter fence (see Drawing 26, Sheet 2 in Volume III). Authorization to enter the Facility will be verified for each vehicle. Visitors will be required to sign in at the guard shack and will be escorted while onsite unless other arrangements are made with the Facility. Only authorized persons will be allowed past the security gate guard shack.

1.4.2. Onsite Transportation Of Wastes

All trucks transporting wastes will be stopped at the security gate prior to entering the Facility. Security personnel will record the license number, transportation company, arrival time, and other pertinent information with regard to the vehicle and driver.

After being granted access to the Facility through the security gate entrance, waste transport vehicles will be directed to the untarping/sampling area. Here, a sample of the waste will be collected for fingerprint testing, along with the shipment manifest and other pertinent documentation. While the sample is being analyzed at the chemical laboratory, the truck will be directed to the weigh scales and finally to the truck staging area. The truck will remain at the staging area until laboratory analysis verifies that the waste meets acceptance criteria and the waste characteristics are consistent with profile information from the shipment manifest.

Following determination that waste acceptance criteria have been met, the truck will be directed either to the landfill, in cases where wastes can be directly landfilled (for instance, when all LDR treatment standards are met), or to another station for staging/storage or further processing.

1.4.3 Routes

Transporters must use U.S. Highway 380 to reach the Facility. U.S. Highway 380 runs east and west between Roswell and Tatum, New Mexico as shown in Figure 1-2.

1.5 REMAINDER OF PERMIT APPLICATION

Treatment, storage, and disposal; groundwater protection; Facility design; waste analysis; procedures to prevent hazards; Contingency Plan; personnel training; closure; waste minimization; corrective action; and organic air emissions are discussed in the remainder of the permit application. A list of references used for the preparation of this application is also provided.

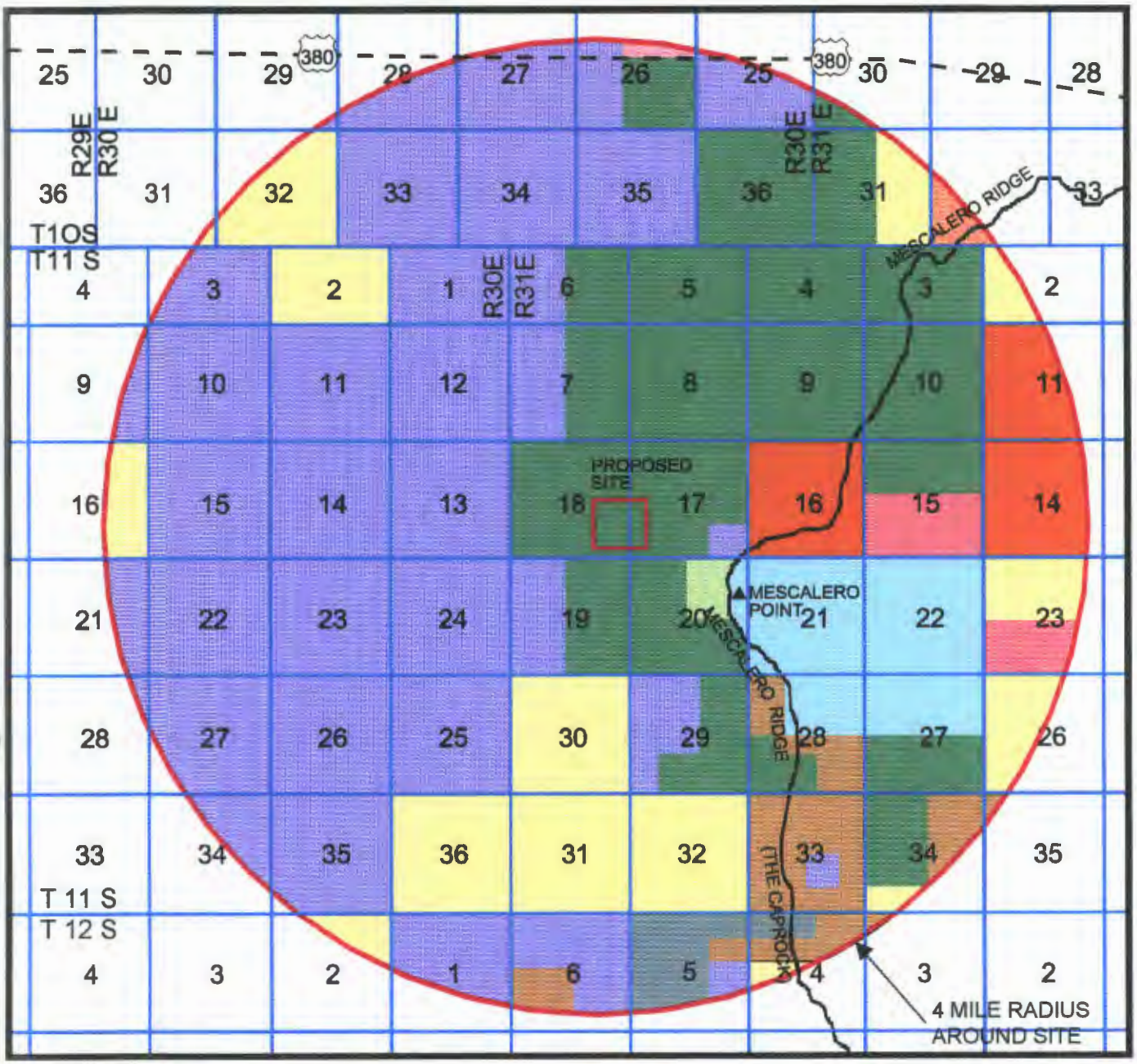

United States of America
Marley Raches, Ltd.
McPeters, Rex Wayne
Sand Ranch, Inc.
State of New Mexico
Jack Luce
Robert C. Marley
Frank W. DeBorde
Smith Revocable Trust
Lea Cattle Co. Ltd. Partnership
Effie C. Wilson

N
W
E
S

ONE INCH = 2000'

LAND OWNERSHIP WITHIN 4 MILE RADIUS

TRIASSIC PARK WASTE DISPOSAL FACILITY

Figure 1-1

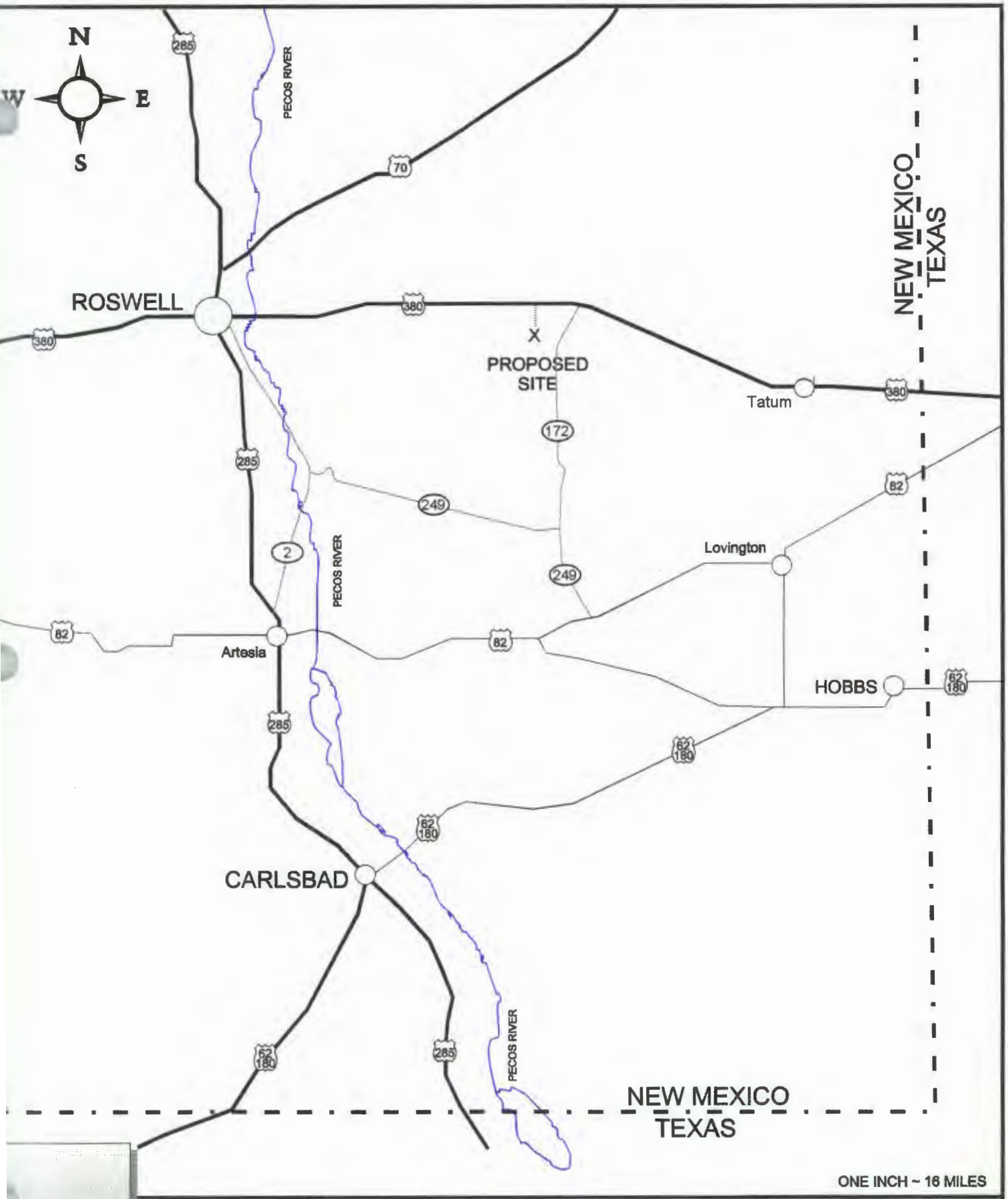

SITE LOCATION MAP

TRIASSIC PARK WASTE DISPOSAL FACILITY

Figure 1-2

OWNER	DISTANCE	DIRECTION
Marley Ranch	Approximately 2.9 Miles	East-Southeast
Bill Kolb - KOBR TV Towers	Approximately 4.5 Miles	East
KOBR TV - two dwellings	Approximately 4.5 Miles	East
Pearce Ranch	Approximately 4.5 Miles	Southeast
Sand Ranch	Approximately 6.3 Miles	Northeast
Jack Luce Ranch	Approximately 6.5 Miles	Northeast
Pearce Ranch	Approximately 7 Miles	West
Buddy Fort Ranch	Approximately 7 Miles	East-Southeast
Sand Ranch	Approximately 7.2 Miles	Northwest
Bill Rushing	Approximately 8 Miles	Northeast
Tivis Ranch	Approximately 8.2 Miles	Southeast
Johnson Ranch	Approximately 9.7 Miles	North

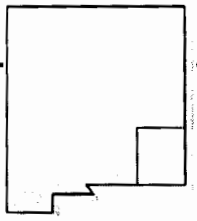

RESIDENCES WITHIN A TEN MILE RADIUS

Figure 1-3

TRIASSIC PARK WASTE DISPOSAL FACILITY

AutoCAD FILE: GANDY-FIG1-3

2.0 TREATMENT, STORAGE, AND DISPOSAL

This section provides a general description of the storage, treatment, and disposal processes and units for the Facility. For each of the operational units described in this section, detailed design drawings and associated engineering reports are contained in Volume III of this application.

2.1 FACILITY OVERVIEW

An overview of the Facility layout is provided in Volume III, Drawing 4 of this application. This drawing shows the units used for the five general categories of waste disposal activities at the Facility. These five waste disposal operations are: (1) waste acceptance, (2) waste receiving, (3) waste staging/storage (4) waste treatment, and (5) waste disposal. Each activity is described below.

2.1.1 Facility Waste Acceptance

Prior to initiation of a shipment of waste to the Facility, the generator of the waste must provide a full characterization of its waste and receive approval from the Facility to ship the waste. This process is more completely described in the Waste Analysis Plan presented in Section 4.0. The Facility will use the waste characterization data to perform the following activities:

- ensure that the waste can be accepted in accordance with the RCRA permit;
- verify that the Facility has the capability to properly treat and/or dispose of the waste;
- identify any safety precautions that must be taken to properly manage the waste;
- use the physical characteristics and chemical composition of the waste to determine the most effective treatment and disposal methods for the waste;
- select parameters to be tested to determine the formula for stabilization of appropriate wastes;
- select parameters to be tested upon arrival at the Facility to verify that the waste accepted is the waste characterized; and,
- develop a cost estimate for treatment and disposal.

2.1.2 Waste Receiving

Once approved for acceptance at the Facility, the waste can be shipped. The Facility can be accessed only from New Mexico State Highway 380, as shown in Figure 2-1. When a shipment arrives at the Facility, a Facility representative will verify that the shipment was scheduled. If unscheduled shipments arrive at the Facility, the Facility manager will be consulted to determine if the appropriate paperwork has been received and the shipment can be accepted.

The shipment and shipping papers will be inspected to ensure that the correct inventory has been received, that the hazardous waste manifest is properly completed, and that a LDR certification is attached. Any discrepancies will be resolved prior to acceptance of the shipment. If discrepancies cannot be resolved, the shipment will be rejected. Representative samples of the waste will be taken and fingerprint testing will be conducted. Fingerprint testing is described in Section 4.3.2.1. If the fingerprint test results are inconsistent with the generator's information, several actions can be taken (see Section 4.3.2.1). Waste will be processed only if fingerprint tests are consistent with information provided by the waste generator.

2.1.3 Waste Staging/Storage

Containerized wastes will be moved to the drum handling unit or the roll-off storage area. The objectives of these container storage areas are to provide safe storage of waste prior to its introduction into the treatment or disposal system; to ensure that adequate accumulation space is available during intervals when the treatment or disposal system is temporarily unavailable; and to facilitate repackaging as necessary.

Containerized material and bulk solids will be transferred directly to the landfill for disposal if all applicable LDR requirements are met and, in the case of containerized material, if the container is at least 90 percent full.

Restricted waste at the Facility will be stored solely for the purpose of accumulating sufficient quantities to facilitate proper treatment, recovery, or disposal. Procedures will be in place at the Facility so that only that waste will be accepted that either (1) meets LDR treatment standards; or (2) is amenable to treatment using existing and available treatment capabilities at the Facility, such that restricted wastes will not be stored for longer than one year.

2.1.4 Waste Treatment

There are two treatment processes proposed: stabilization and evaporation. Low concentration wastewater from off site generators and leachate from the landfill that meet LDR standards will be placed in the evaporation pond. Pond sludge, contaminated leachate from the landfill that does not meet LDR standards, and various wastes from generators will be treated in the stabilization process. Stabilized waste that meets LDR treatment standards and other treatment criteria will be placed in the landfill.

Wastes that carry more than one characteristic or listed waste code must be treated to the most stringent treatment requirements for each hazardous waste constituent of concern. When wastes with different treatment standards are combined solely for treatment, the most stringent treatments standard specified will be met.

2.1.5 Waste Disposal

In general, wastes arriving at the Facility that meet LDR requirements and contain no free liquids will be directly landfilled. When wastes are unable to be directly landfilled, such as during landfill equipment maintenance periods or extreme weather conditions, the waste will be stored in the waste storage area. Wastes stabilized at the Facility that meet LDR requirements will be transferred to the landfill from the treatment or storage areas as necessary.

An access ramp will be constructed from the top of the landfill to the bottom of the active portion of the landfill (see Drawings 8 and 14 in Volume III). Bulk hazardous wastes will be placed and compacted on the bottom of the landfill in 5-foot to 10-foot layers or lifts. Containers will be placed upright in the cell using a forklift or barrel snatcher. Sufficient space will be left around the containers for the placement and compaction of compatible bulk hazardous wastes or soil. A layer of cover soil sufficient to prevent wind dispersal of waste will be placed over the bulk hazardous wastes and containers following emplacement or before the end of each working day (see Section 2.5.1.7). The soil cover will be deposited on top of the waste placement face and then spread and compacted with a tracked bulldozer.

The landfill will be laid out in an engineered grid system consisting of blocks that are 50 feet wide, 50 feet in length, and 10 feet in depth. Grid stakes will be established by survey. A two-dimensional grid system along with lift elevation designation will provide a three-dimensional record of the location of

all wastes placed in the landfill. Records of the location, date of placement, waste source, manifest, and profile numbers will be maintained at the Facility.

2.2 CONTAINER STORAGE AREAS

The site will employ two container storage areas: a drum handling unit and roll-off storage area. Descriptions and conditions specific to these areas are presented in Section 2.2.1 and Section 2.2.2 for the drum handling unit and roll-off storage area, respectively. Sections 2.2.3 through 2.2.14 describe conditions common to both units. Wastes which are either suspected or known to contain free liquids will be managed accordingly. A description of how these wastes will be managed is included in the following sections. More detailed information on the management of wastes containing free liquids can also be found in the Waste Analysis Plan presented in Section 4.0. Both the drum handling unit and the roll-off storage area will be constructed to meet the minimum requirements identified in the detailed design and associated engineering report (Volume III).

2.2.1 Drum Handling Unit

Drawings 37, 38, and 39 presented in Volume III of this application show the detailed design for the drum handling unit. The open sided unit will be roofed to prevent run-on from precipitation. The roof of the building is designed to extend over the unloading dock area to ensure that precipitation does not enter the building or impact unloading operations.

The building will be equipped with fire extinguishers, a sprinkler system, telephones, fire alarm system, public address system, eye washes, safety showers, spill control equipment, and first aid equipment. An office for storing record-keeping information and for administrative functions within the drum handling unit will be located in the building.

The base of the drum handling unit will consist of a prepared subgrade of non-swelling soils placed at moisture and density capable of supporting projected loads comprised of the building's structural components, stored waste, and mobile equipment traffic inside the building. A 60-mil geomembrane liner, cushion geotextile, and 1 foot of foundation sand will overlie the subgrade. The steel reinforced concrete floor will be constructed on the prepared subgrade. Design details and the associated specifications are presented in Volumes III and IV of this application.

2.2.1.1 Containment and Detection of Releases

Wastes stored in the drum handling unit will be placed in individual storage cells segregated by waste type and compatibility. A chemically resistant epoxy coating (or an equivalent) will be applied to the concrete floor. Chemical resistant water stops and caulking will be installed in all joints. The floor is designed and will be maintained to be free of cracks and gaps and will be inspected regularly to determine if any cracks or gaps have developed or if the epoxy coating has been damaged. Should cracks or gaps develop in the concrete, repairs will be scheduled immediately. The nature of the repair will depend on the extent of the cracking and could range from the application of chemically resistant epoxy fillers or coatings to the replacement of portions of the concrete floor.

Each storage cell will have a concrete floor that slopes toward a trench covered by steel grating. Each trench will lead to a separate secondary containment sump for that cell where any spilled liquids will be accumulated. The trench and sump system design incorporates a double high-density polyethylene (HDPE) geomembrane liner and leak detection and leachate removal system. The secondary containment sump incorporates drainage material surrounding a perforated pipe. The trench and sump has been sized to contain at least 10 percent of the volume of the containers stored in the cell. The leachate collection and removal system (LCRS) and leak detection and removal system (LDRS) sumps in the drum handling unit will be checked regularly for the presence of liquid. If liquids are present, samples will be obtained and chemically analyzed to determine the nature and concentration

of any waste constituents. An appropriate treatment or disposal method will be selected in accordance with the Waste Analysis Plan presented in Section 4.0. Pumpable quantities of liquids will be removed with a vacuum truck. Leaks and spills will be removed from the sump in as timely a manner as possible. Because the building is enclosed, precipitation and the consequent accumulation of liquid are not considered in the design or operation of the drum handling unit.

The TSCA cells will be surrounded by a 6-inch concrete berm, in addition to the floor trench and sump.

2.2.1.2 Dimensions

The drum handling unit is 418 feet long by 118 feet wide (see Drawing 37 in Volume III). The building floor and loading dock will be 5 feet above ground level to facilitate the loading and unloading of trucks and prevent run-on from precipitation. An adjustable hydraulic loading platform will align the truck beds with the building floor to allow for the smooth transition of forklifts in and out of the trucks from the floor. An overhang on the front of the building will prevent precipitation from getting on the drums and into the front area when the doors are open.

2.2.1.3 Storage Limits

The Facility will contain seven separate containment areas, each 52 by 63 feet as shown on Drawings 37 and 38 in Volume III. Each of the seven areas will have its own floor drain and containment sump, allowing incompatible wastes to be placed in separate cells. Two of the cells will be designed to accommodate TSCA PCB wastes. Aprons on the ends of the TSCA areas will be tapered to allow for forklift access over the concrete berms. The total capacity of the drum handling unit will be 1,120 drums (160 drums per containment cell). The drain and sump for each drum cell is dimensioned such that the storage capacity will be a minimum of 118 cubic feet, 10% of the capacity of the drums in each cell. A typical drum layout is shown in Drawing 37 of Volume III.

2.2.2 Roll-Off Storage Area

Roll-off containers will be stored on an open pad, as shown in Drawings 41 through 43 presented in Volume III. This unit will not be covered or enclosed by walls. The pad will be divided into two sections, only one of which is addressed in this permit. The half included in this permit will hold tarped, U.S. Department of Transportation (DOT) approved, lined, roll-off containers with non-stabilized waste awaiting treatment at the stabilization unit. The other half of the pad, which will be operated as a RCRA 90-day storage area, is intended as a staging area for roll-off containers containing stabilized waste awaiting Toxicity Characteristic Leaching Procedure (TCLP) test results and landfill-disposal approval.

This area is restricted to wastes that do not contain free liquids. Prior to exiting the stabilization unit, stabilized waste loads will be tested for free liquids using the paint filter test. Stabilized waste loads that do not pass the paint filter test will be reprocessed using a modified treatment mixture and re-tested before being allowed to exit the stabilization unit. Roll-off containers which hold stabilized wastes that pass the paint filter test will be covered before exiting the stabilization unit and will remain covered while they are staged in the roll-off storage area.

Roll-off containers will be inspected for free liquids prior to acceptance at the unit. Containers which are received for disposal, but are found to contain free liquids upon inspection will be managed in accordance with stabilization procedures described in Section 2.4. If the waste generator will not allow the Facility to prioritize handling of the load to eliminate free liquid, the load will not be admitted to the Facility. Otherwise, free liquids will be removed with a vacuum truck, characterized, and managed in accordance with stabilization procedures described in Section 2.4. Following the removal of free liquids, the waste (in the roll-off container) will either be managed through the

stabilization process or landfilled, whichever is appropriate. Section 2.2.12 describes the methods that will be used to separate incompatible wastes. The area will be equipped with fire extinguishers, a telephone, alarm systems, spill control, and first aid kits.

2.2.2.1 Containment and Detection of Releases

There is a potential for free liquids to exist in incoming waste. The roll-off storage area is designed to store any non-stabilized waste that may contain free liquids. Secondary containment for the non-stabilized waste side of the roll-off storage area is shown in Drawing 41 through 43 in Volume III.

The floor and slopes of the lined cell will consist of, from bottom to top, a prepared subgrade; a geomembrane liner that will be composed of a component material compatible with the anticipated waste; a geocomposite drainage layer; a structural-fill; and a roadbase surface. A sump will be incorporated into the drainage layer. To accommodate this installation, the floor will be sloped to a sump located in the corner of the storage area. Any liquids would collect in the containment sump, which is designed to have the pumping capacity to remove liquids resulting from the 25-year, 24-hour storm event.

The containment sump is designed to collect precipitation falling inside the bermed area of the truck roll-off storage area. During heavy rain events, a portion of the water will drain along the roadbase surface to the sump area located in the corner of the cell. The remaining volume will percolate through the roadbase and structural fill and will be collected in the geocomposite drainage layer. Water collecting on the surface of the sump or in the sump drainage gravel will be removed by vacuum truck. Samples of sump liquids will be chemically analyzed to determine the presence and concentration of any waste constituent. After this determination, an appropriate method of treatment or disposal will be selected in accordance with the criteria prescribed in the Waste Acceptance Plan (see Section 4.0). Leaks, spills, and precipitation will be removed from the sump as soon as possible. The entire roll-off storage area will be surrounded by a berm which ranges in height from 4 feet to 8 feet.

The purpose of the drainage system below the storage area surface is to allow rainfall to be collected and removed from the contained area. This will reduce ponding and mud formation on the storage area surface and will allow the surface to support truck traffic almost immediately following a rainstorm. The presence of free liquids inside the roll-off container/bed liner system can occur if liquids are inadvertently loaded in the container, rainfall enters a hole in the roll-off container cover during transportation, or liquids separate from solids during transport. These free liquids will be identified when the roll-off container is visually inspected at the untarping station.

It is possible, but unlikely, that free liquids could be generated after inspection in the staged roll-off containers. For example, if a faulty roll-off container cover allows rainfall to enter the container and both the plastic and containment fail, a leak can occur on the surface of the roll-off storage area. A leak will appear as a drop or a stain on the storage area surface. In the case of a leak, the liquids in the roll-off container will be handled as described in Section 2.4 and the stained soil will be excavated and handled as a potential hazardous waste.

2.2.2.2 Dimensions

The entire roll-off storage area (including both halves) will measure 420 feet by 350 feet from the outer edge of the berms. The berm height surrounding the area will range from 4 feet to 8 feet. The storage areas will be accessed by 35-foot-wide compacted soil ramps at the center of each storage area. The half covered by this permit will measure approximately 220 feet by 160 feet inside the berms.

2.2.2.3 Storage Limits

The permitted capacity of the incoming waste cell will be 44 roll-off containers. The stabilized waste cell also will have a capacity of 44 roll-off containers, for a total storage capacity of 88 containers. The actual number of roll-off containers placed in the roll-off storage area may vary slightly depending on placement arrangements as determined by operations.

2.2.3 Warning Signs

Signs containing the legend "Danger - Unauthorized Personnel Keep Out" will be conspicuously posted on the outside and at entrances to the storage areas. In the areas where ignitable or reactive wastes will be stored, "No Smoking" signs will be posted. All signs will be in both English and Spanish.

2.2.4 Proper Waste Storage

Compatibility codes established during the initial receipt of waste will be assigned to ensure the proper storage of containers within the Facility (see Section 4.0). Containers which are discovered upon receipt to have free liquids will not be accepted or will be handled at the stabilization unit as a priority load.

2.2.5 Ignitable/Reactive Wastes

Ignitable or reactive wastes will be protected from any sources of ignition or reaction. All containers storing ignitable or reactive waste will be stored at least 50 feet inside the fence around the Facility shown in Volume III, Drawing 4. "No Smoking" rules will be enforced and open flames prohibited where ignitable or reactive waste is being handled.

2.2.6 Precautions to Prevent Reactions

Precautions to prevent reactions are described in Section 5.0, Procedures to Prevent Hazards.

2.2.7 Inspection Methods

As required in 40 CFR 164.174, all container storage areas will be visually inspected at least once a week for leaking containers and deterioration of the containers and containment area. Inspectors will enter the area and visually inspect the area and the containers. All inspection information will be recorded, and any problems noted during the inspection will be resolved in a timely manner (see Section 5.0). Workers will be instructed and trained on the procedures for identifying and reporting any signs of leaks or deterioration that appear between the weekly inspections. Any identified leaks will be resolved as described in Section 2.2.10.

2.2.8 Types of Containers

Hazardous wastes will be stored in 10-gallon, 35-gallon, or 55-gallon drums, in 20 cubic yard or similar roll-off containers, or in other DOT approved containers. Overpack drums will be used as necessary.

2.2.9 Labels

All containers of hazardous waste in storage will be labeled with a hazardous waste label identifying the contents of the container. The label will also be clearly marked to indicate the date of accumulation or the date of receipt. The label will not be obstructed from view during storage.

2.2.10 Condition of Containers

All containers of hazardous waste will be managed by the following conditions:

- containers will be maintained in good condition. If a container is not in good condition (e.g. severe rust, apparent structural defects, or leaks), the hazardous waste will either be transferred to a container that is in good condition or be managed in some other way, such as direct placement in the landfill or stabilization unit;

- containers of hazardous waste stored at the drum handling unit will be closed during storage, except when it is necessary to add or remove waste;

- the container storage area will be inspected prior to placement of containers to ensure that no conditions exist which could damage the waste containers; and,

- all containers will be handled in a manner, and with equipment compatible to their design and construction, to minimize the potential for damage to the container.

2.2.11 Compatibility with the Container

All hazardous waste will be compatible with the container or liner as defined by the following conditions:

- all containers used to store hazardous waste will be made of, or lined with, material that will not react with, or otherwise be incompatible with, the waste being stored so that the ability of the container to hold waste is not impaired; and,

- hazardous waste will not be placed in an unwashed container that has previously held incompatible waste or material.

2.2.12 Compatibility with Other Waste

Incompatible liquid hazardous wastes stored within the units will be separated by a berm, catch pan, or other physical barrier which adequately prevents commingling of incompatible wastes. Incompatible solid hazardous wastes stored within the container storage areas will be separated by a distance of at least 10 feet unless separated by a berm, catch pan, or other physical barrier. Incompatible wastes will not be placed in the same container.

2.2.13 Aisle Space

Aisle spacing will be maintained to assure inspectability and accessibility for operational and emergency equipment to containers. The spacing will allow for the unobstructed movement of personnel, fire protection equipment, spill control equipment, and decontamination equipment in the event of an emergency, as required by 40 CFR 264.35.

A minimum 30-inch aisle space will be maintained in the drum handling unit between double rows of containers. Containers will be stored in single rows only if they are against a wall or other barrier that prohibits inspection from all sides. Roll-off containers will be spaced 4 feet apart and 4 feet from the edge of the berm.

2.2.14 Record Keeping

The results of all container storage waste analyses, trial tests, waste compatibility analyses, and ignitable and reactive waste handling documentation pertaining to compliance will be maintained in the Facility operating record. Inspection records will be maintained in the inspection log for each unit.

2.3 STORAGE IN TANKS

The liquid waste receiving and storage unit is shown in Volume III, Drawing 40. It will house four aboveground tanks for the storage of regulated bulk liquid hazardous wastes prior to stabilization. The unit will not be covered by a roof or enclosed by walls.

Each tank will have a capacity of approximately 9,000 gallons. The tanks will be double-walled and constructed of high density polyethylene materials that are compatible with the wastes to be placed in the tanks. Facility procedures for waste acceptance and the associated criteria and waste acceptance plan will ensure that wastes incompatible with the tank material are not placed in the storage tanks. These compatibilities are assessed in the design specifications and engineering report (see Volume III). The tanks will be elevated above an imperviously coated reinforced concrete pad. Waste will be transferred from the tanks to the stabilization unit either by pumping into transfer tankers or by direct piping.

Each of the storage tanks will be clearly marked with a description of the contents and records will be kept documenting the quantity of waste received, and the date each period of accumulation begins. This information will be documented in the Facility operating record.

2.3.1 Containment and Detection of Releases

The outer tank of the double walled poly tank system will provide secondary containment of sufficient strength and thickness to prevent failure due to pressure gradients, physical contact with waste, climatic conditions, or the stress of daily operations. The tank system will be placed on a concrete base capable of supporting the system, providing resistance to pressure gradients below the system, and preventing failure due to settlement, compression, or uplift. The secondary tank is designed to contain 100 percent of the tank contents.

Each tank will be surrounded by a concrete area which will be sloped to provide drainage to a sump. The floor and berm of the concrete area will be maintained in good condition and free of cracks and gaps, as described in Section 2.2.1.1, in order to protect the effectiveness of the containment.

All ancillary equipment will be provided with secondary containment except aboveground piping (exclusive of flanges, joints, valves, and other connections), welded flanges, welded joints, and welded connections that are visually inspected for leaks each operating day.

Daily visual inspection will be used to detect releases to the secondary containment. Response to releases from tank systems will be initiated immediately upon discovery, and regulations specified in 20 NMAC 4.1 Subpart V, 40 CFR 264.196(d) or 40 CFR 264.56 will be followed as appropriate (see Section 5.0), including notification of the Hazardous and Radioactive Materials Bureau (HRMB) of the New Mexico Environment Department (NMED) and National Response Center (NRC). The secondary containment tank will be emptied by pumping fluids from the drainage port located near the base of the tank or by the use of a vacuum truck.

2.3.2 Management of Incompatible Wastes

Only the waste types approved for a tank system will be placed in the tank. No new waste types will be placed into an existing tank system unless (1) the compatibility of the new waste type with the prior contents of the tank is determined by testing or documentation; or (2) the existing tank system is cleaned or flushed to the extent necessary to ensure compatibility with the new waste type.

2.3.3 Spill and Overfill Prevention

Appropriate controls and practices will be used to prevent spills from and overfills of the tank or containment systems.

Spill prevention is primarily maintained by hard-plumbed piping. When transfer lines are not hard plumbed or when open-ended lines are used, one or more of the following spill prevention controls or an equivalent device will be used:

- *Dry Disconnect Couplings* - a pipe connection designed to cap the flow of liquids as soon as the fitting is disconnected;
- *Direct Monitoring* - the transfer is monitored continuously to prevent spills; and/or,
- *Overfill Prevention* - one or more of the following spill prevention controls or an equivalent device will be used:
    - ◊ *Automatic Feed Cutoff* - a device used to stop flow into a tank when it is filled to operating capacity or another predetermined level;
    - ◊ *High-Level Alarm* - a device used to detect the level in a tank, sounding an audible alarm or displaying a visual alarm when the operating capacity level or another predetermined level is reached;
    - ◊ *Level Indicator* - a device used to visually display the level of material in a tank; if a level indicator is used for overfill prevention, the indicator must be monitored during liquid transfers or checked prior to transfers to ensure that sufficient capacity exists in the receiving tank. Level indicators may include sight gauges , level meters, or graduations placed directly on opaque poly tanks; and/or,
    - ◊ *Bypass* - a device or plumbing arrangement used to divert flow from the tank being filled to a second tank of sufficient capacity after the operating or predetermined level has been reached.

2.3.4 Feed Mechanism, Pressure Controls, and Temperature Controls

The tanks will be operated at ambient pressure and temperature when storing liquids. One of the following feed mechanisms for tank systems or an equivalent transfer mechanism will be used:

- *Pump Transfer* - liquids will be pumped into or out of the tank through permanent or temporary transfer lines; or,
- *Gravity Drain* - liquids will be allowed to drain by gravity through permanent or temporary transfer lines.

2.3.5 Management of Ignitable or Reactive Wastes

Ignitable or reactive wastes will not be placed into any tank system unless the tank system is protected from sources of ignition by measures including, but not limited to, the following: signs prohibiting smoking, open flames or welding; an inert atmosphere blanket; enclosed vents isolated from sources of ignition.

2.3.6 Inspections

A visual inspection of tank systems will be conducted each operating day. Each tank system will be visually inspected, including, but not limited to, the tanks and ancillary equipment, monitoring and leak detection systems, and the construction materials and area immediately surrounding the tank system. The results of each inspection will be documented in the daily operating record. Inspections are further described in Section 5.0, Procedures to Prevent Hazards.

2.3.7 Corrosion Protection

All liquid hazardous waste materials will be stored in double walled poly tanks. Corrosion protection is not required for double walled poly tanks that do not come into contact with soil or water.

2.3.8 Tank Assessments

A written assessment attesting that the tank system has sufficient structural integrity and is acceptable for the storing and treating of hazardous waste will be provided by an independent, qualified, New Mexico registered professional engineer based on the final tank design drawings and prior to tank construction. The engineering report presented with the tank design drawings in Volume III includes a discussion of wastes to be excluded from storage in poly tanks due to their excessive corrosive effects.

2.3.9 Ancillary Equipment

All ancillary equipment will be supported and protected against physical damage and excessive stress due to settlement, vibration, expansion, or contraction.

2.3.10 Installation and Tightness Testing

Proper handling procedures will be developed and followed to prevent damage to the system during installation. A qualified installation inspector will inspect the installed system to ensure adequate construction/installation. Any discrepancies will be resolved before the system is placed in service.

The tanks and ancillary equipment will be tested for water tightness, and any necessary repairs will be performed prior to the system being placed in service.

Written statements by those who certify the design and supervise installation will be maintained in the operating record.

2.3.11 Repair and Certification of Tank Systems

If a release occurs from the primary tank system, the tank will be removed from service immediately. Wastes in the tank will be removed within 24 hours to the extent necessary to prevent further release and allow inspection and repair of the tank system. All released materials will be removed from the secondary containment as soon as possible and within 24 hours of detection.

The tank system will be repaired or replaced prior to returning it to service. An independent New Mexico registered professional engineer will certify major repairs. The certification will be submitted to the NMED within seven days after the tank system is returned to service. Major repairs include repair of a ruptured primary containment vessel and replacement of secondary containment.

2.3.12 Transfer of Liquids from Liquid Waste Storage to the Stabilization Unit and to the Evaporation Pond

Transfer of liquids from the liquid waste storage tanks to the stabilization unit will be accomplished either by direct piping to the unit or by tanker trucks approved for liquid waste transfer. Approved tanker trucks, such as vacuum trucks or DOT approved tankers, will be used to transfer liquids from the storage tanks to the evaporation pond. Tanker trucks will be cleaned following a transfer operation to ensure that subsequent transfers do not result in mixing of incompatible or reactive wastes. Similarly, if direct piping to the stabilization unit is used to transfer liquids, the pipelines will be cleaned prior to using the pipes for any subsequent incompatible waste transfer.

Personnel performing liquid waste transfer operations will comply with all personal protective equipment (PPE) requirements and transfer operation procedures, including spill cleanup. Impervious concrete coatings will be applied to the liquid waste storage tank containment area and the evaporation pond discharge station. Hose and pipe connections will be inside the concrete containment area boundaries.

2.4 STABILIZATION

Drawings 33 through 36 presented in Volume III of this application show the stabilization building floor plan, a typical bin, and vault sections. The stabilization process will use four in-ground double lined stabilization bins, two dry reagent silos, two liquid reagent tanks, and a water tank. Trucks and other vehicles will access the unit via the gravel aprons. Additionally, there will be a control room from which operations will be directed and coordinated.

Bulk liquids, semi-solids, sludges, and solids that do not meet LDR treatment standards, as well as solids that may contain free liquids, will be treated in the stabilization unit. Dilution of restricted wastes will never be used as a substitute for adequate treatment. If toxic characteristic wastes and listed wastes are amenable to the same type of treatment and aggregation is a part of treatment, the aggregation step does not constitute impermissible dilution.

As discussed in the Waste Analysis Plan in Section 4.0, wastes will be tested prior to stabilization to determine the appropriate reagent formula. Both dry and liquid reagents may be used in the stabilization process. Waste may be offloaded directly from trucks into the stabilization bins, transferred via pipeline from the liquid hazardous waste storage tanks, or transferred from the drum handling unit or roll-off storage area. The bins will be covered while dry reagents are being added to control particulate air emissions. The cover will be removed and a backhoe positioned adjacent to the bin will mix the waste and reagents. When the waste is sufficiently mixed, it will be tested in accordance with the Waste Analysis Plan (see Section 4.0). It will then be placed in a roll-off container and transferred to the roll-off storage area to cure.

The backhoe bucket and stabilization bin will be thoroughly cleaned before a load of waste which is not compatible with the waste previously stabilized in that bin is mixed. After the last bin load of a specific stabilization mixture has been loaded out, Facility personnel will use a high-pressure water hose located near the bins to rinse the backhoe bucket and the bin walls. This rinsing will cause residual clods of stabilized waste to fall to the bottom of the bin along with the rinse water. Reagents will then be added to the bin at the same mixture proportions and the remaining waste and rinse water will be stabilized, tested for free liquids, and loaded out before a different waste stabilization mixture is processed in that bin.

The nominal dimensions of the bins are 25 feet long by 10 feet wide by 10 feet deep, resulting in an approximate volume of 2,500 cubic feet. The ends of the bins have been shaped to conform to the reach profile of the backhoe selected for mixing in the stabilization unit. The bins will be contained in a concrete vault, which will also provide support. All mixing bins will be equipped with ventilation and air pollution control systems to remove any air pollutants generated during the mixing process. Potential contaminants may include particulates, low concentration volatile organic compounds, or acid fumes.

2.4.1 Contaminant and Detection Releases

The bins will be of steel construction. Waste which is incompatible with the steel used in construction will not be stabilized in the bins. An assessment of the compatibilities of the bin materials and waste, along with the influence of the process (materials, time, temperature, etc.), is contained in the design specifications and the associated engineering report (Volumes III and IV). The design requirements and limitations will be incorporated into Facility procedures. The waste acceptance plan and associated criteria will ensure that waste which is incompatible with the bin construction material will not be introduced into the bins.

The bins will be double-walled steel tanks with the space between the walls serving as the LDRS. Shock absorbing coiled wire rope isolators will maintain separation between the bins.

The tank secondary containment (the outer shell) will be of sufficient volume to contain the contents of the inner tank, because the inner tank will be completely enclosed within the outer shell. The vault will not be used as secondary containment; therefore, it does not have to be lined or meet other requirements for secondary containment. Its purpose will be to isolate the tank system from the surrounding soil and provide a means to inspect and repair the secondary containment.

Releases into the LDRS will be detected within 24 hours by liquid sensing instruments (e.g. a magnehelic gauge) or inspection. Accumulated liquids will be removed within 24 hours of detection. The secondary containment will be emptied by pumping accumulated liquids into a temporary storage tank or into another stabilization bin. Releases to the LDRS could occur if a breach occurred in the primary steel liner. In such a case, the bin will be removed from service and repaired.

All ancillary equipment will be provided with secondary containment unless is it aboveground piping (exclusive of flanges, joints, valves, and other connections), welded flanges, welded joints, and welded connections that can be visually inspected for leaks each operating day.

2.4.2 Management of Incompatible Wastes

New waste will not be placed in the bins unless (1) the compatibility of the new waste type with the prior contents of the bin is determined by testing or process knowledge documented in the operating record or (2) the existing tank system is cleaned or flushed to the extent necessary to ensure compatibility with the new waste type using procedures specified in Section 2.4.

2.4.3 Spill and Overfill Prevention

Spill and overfill prevention will be accomplished by continuous direct monitoring of transfer operations. Additionally, the delivery system will be computerized and will be designed to ensure that the mixture used for stabilization prevents overfilling.

2.4.4 Feed Mechanism, Pressure Controls, and Temperature Controls

The stabilization bins will be operated at ambient temperature and pressure. Reagents will either be pumped from reagent tanks or manually fed. Liquid hazardous wastes will be pumped from the liquid

waste receiving and storage unit or from vacuum trucks or tanker trucks. Other wastes may be manually transferred directly from the incoming waste hauler truck or from the container storage areas.

2.4.5 Management of Ignitable or Reactive Waste

The stabilization bins will be protected from sources of ignition through the use of signs and procedures prohibiting smoking, open flames, or welding. If ignitable or reactive wastes are placed in the bins, they will be immediately mixed with sufficient quantities of fly ash and/or cement to render them non-ignitable or non-reactive.

2.4.6 Inspections

Each stabilization bin will be visually inspected once each operating day as described in Section 5.0, Procedures to Prevent Hazards. At least once per month, the daily visual inspection will be conducted on empty bins to ensure the integrity of the bin and welds. An annual sonic test will be conducted to ensure that the thickness of the inner tank and outer shell is maintained.

2.4.7 Corrosion Protection

Corrosion is not anticipated to be a significant problem for the stabilization bins because of low humidity and the fact that the units are located indoors. No corrosion protection will be provided other than cathodic grounding. The thickness of the inner tank and outer shell compensates for the abrasion and impact forces of the backhoe bucket during waste stabilization mixing. The preliminary structural steel design of the bins is presented in the engineering report (Volume III).

Inspection of the bins is discussed in Sections 2.4.6 and 5.2.6. Visual inspection of the empty bins will be accomplished monthly, and sonic testing will be conducted annually. The system has been designed so that the inner tank and outer shell can be easily removed and replaced, if necessary.

2.4.8 Tank Assessments

A written assessment attesting that the tank system has sufficient structural integrity and is acceptable for the storing and treating of hazardous waste will be provided by an independent, qualified, New Mexico registered professional engineer based on the final tank design drawings and prior to tank construction. The engineering report presented with the preliminary tank design drawings in Volume III include a discussion of wastes to be excluded from storage or treatment in steel tanks due to their excessive corrosive effects.

2.4.9 Ancillary Equipment

All ancillary equipment will be supported and protected against physical damage and excessive stress due to settlement, vibration, expansion, or contraction.

2.4.10 Installation Inspection and Tightness Testing

Proper handling procedures will be developed and followed to prevent damage to the system during installation. A qualified installation inspector will inspect the installed system to ensure adequate construction/installation. Any discrepancies will be resolved before the system is placed in service. The bins and ancillary equipment will be tested for water tightness, and any necessary repairs will be performed prior to the system being placed in service. Written statements by those who certify the design and supervise installation will be maintained in the operating record.

2.4.11 Repair and Certification of Tank Systems

If a release occurs from a primary tank system, the tank will be removed from service and all materials will be removed from the tank or secondary containment within 24 hours or as soon as reasonably possible. The tank system will be repaired prior to return to service. Major repairs will be certified by an independent New Mexico registered professional engineer. The certification will be submitted to the NMED within seven days after the tank system is returned to service.

2.5 LANDFILL

This section describes the design, construction, and operation of the landfill. As with the Facility units discussed previously in this section, the detailed design for the landfill is contained in Volume III of this application. The landfill design is presented on Drawings 6 through 27 in Volume III, and a list of these drawings is provided on Drawing 1, Sheet 2 (Volume III).

2.5.1 Design of Landfill

The landfill design specifies a double-lined landfill with a LCRS above the primary liner and a LDRS between the primary and secondary liners. The detailed design presented in Volume III specifically describes the relationship between the existing site topography and the landfill subgrade.

2.5.1.1 Nature and Quantity of Waste

As specified in the Waste Analysis Plan in Section 4.0, the Facility will accept RCRA hazardous waste and TSCA PCB waste, excluding the following waste types:

- radioactive waste;
- dioxin contaminated waste;
- medical waste;
- MSW and C&D waste;
- explosive waste;
- compressed gases; and,
- liquid waste containing PCBs greater than 50 parts per million.

The wastes which will be accepted for placement in the landfill include all wastes listed in Part A of this application (presented in Volume I). All waste to be placed in the landfill must meet LDR treatment standards. Additional details on wastes to be accepted at the Facility can be found in Section 4.0, Waste Analysis Plan.

The landfill will have an area of approximately 100 acres and a capacity of approximately 10 million cubic yards of waste.

2.5.1.2 Liner Systems

The liner system will be installed to cover all surrounding earth that may come in contact with waste or leachate (see Drawings 9 and 11 in Volume III). The primary system will consist of, from top to bottom, a 2-foot layer of protective soil, a geocomposite drainage layer, and a HDPE geomembrane

liner. The secondary system will consist of a geocomposite drainage layer, HDPE geomembrane liner, geosynthetic clay layer (GCL), and 6 inches of prepared subgrade. Both the primary and secondary systems will extend over the floor and slope areas of the landfill.

The primary and secondary geomembrane liners will be constructed of HDPE as defined in the construction specifications presented in Volume IV. This material will have sufficient strength and thickness to prevent failure as a result of pressure gradients, physical contact with waste or leachate, climatic conditions, stress of installation, and stress of daily operations. The liner systems and geosynthetic drainage layers will rest upon a prepared subgrade capable of providing support to the geosynthetics and preventing failure due to settlement, compression, or uplifting.

The liner system will be installed in stages as the landfill expands both in the vertical direction up slope and in the horizontal direction by phase. The three horizontal phases of landfill expansion are shown in Drawings 4, 6 and 7 in Volume III. The benching technique considered for expansion of the landfill vertically up slope is shown in Drawings 8 through 11 (Volume III) for Phase IA. Geosynthetic liner component tie-ins for the vertical expansion will be made on the access ramps leading into the landfill.

Stresses to the liner system can result from consolidation settlement of the subgrade during waste filling and localized equipment loading during protective soil placement. The subgrade consists of the 6 inch thickness of prepared soil subgrade and the existing ground formations below the landfill (see Drawing 7, Volume III). Because the existing ground formations have been prestressed by overburden forces prior to landfill excavation, additional consolidation settlement during waste filling will be minimal.

Consolidation settlement of the 6 inch prepared soil subgrade layer will also be minimal because it is limited by the thickness of this layer and because this material will be compacted during installation. Localized equipment loading to the liner during protective soil placement will be controlled by specifying maximum equipment ground pressures in the construction specifications and by monitoring the placement of this material. Monitoring can be performed by individuals operating the placement equipment or by grade checkers who will observe the material placement to assure that appropriate thicknesses have been installed.

2.5.1.3 Leachate Collection and Removal System (LCRS)

The LCRS will be located above the primary liner system. Drawing 12 in Volume III provides the design details of the LCRS. A filtered LCRS layer consisting of a geocomposite drainage material will be constructed. Within the floor area of the LCRS layer will be the primary leachate collection piping, which is used to remove leachate from the landfill during the active life and post-closure care period. The piping as shown in Drawing 12 (Volume III) is nominally 8 inches in diameter.

As demonstrated in the engineering report (Volume III), the LCRS will be (1) constructed of materials that are chemically resistant to the waste managed in the landfill and the leachate expected to be generated; (2) of sufficient strength and thickness to prevent collapse under pressure exerted by overlying wastes, waste cover material, and equipment used in the landfill; and (3) designed and operated to minimize clogging during the active life and post-closure care period through selection of an appropriate geotextile for the filtration application (see Volume III, Section 3.1.3).

The LCRS is sloped so that any leachate above the primary liner will drain to one of three sumps. The sumps and liquid removal methods will be of sufficient size to collect and remove liquids from the sumps and prevent liquids from backing up into the drainage layer.

The sump will be lined with the same liner system components as elsewhere in the landfill except that the drainage layer will expand to include gravel and a compacted clay liner material beneath the

primary and secondary geomembranes which will fill the sump area. Leachate that collects in the sumps will be pumped through a pipe to the surface of the landfill where it will be collected in temporary storage tanks.

The leachate storage tanks will be chemically resistant, double lined poly tanks anchored to a concrete crest pad as shown in Sheets 1 and 2 of Drawing 19 (Volume III). To prevent overfilling of the tanks, an individual tank will be installed for each landfill phase, and each tank will be equipped with high-level control switches, which will automatically shut down the leachate collection or leak detection sump pumps. In addition, an alarm will be activated that will notify personnel that the system requires maintenance. Pumps will be hard piped to the leachate storage tanks, and flow meters will be installed to monitor leachate pumping from the landfill should a catastrophic tank or pipe failure occur. All piping will be located within the concrete tank pad. The pump control panel will be located inside the tank pad with electrical wiring enclosed in waterproof conduits.

Because leachate is generated by the landfill, the leachate collection tanks will be used as 90-day storage units and managed accordingly. They are not required to be permitted.

The sump system will provide a method for measuring and recording the volume of liquid removed. Drainage materials will meet the minimum drainage requirements per the specifications. Sump design, filter fabric selection, floor pipe design, pump design, disposal system design, and action leakage rate (ALR) calculations involving removal of leachate flow from a 1-mm^2 hole/acre are discussed in the engineering report (Volume III). All pumpable liquid in the sump will be removed in a timely manner to prevent the head on the primary liner from exceeding 12 inches.

2.5.1.4 Leak Detection and Removal System (LDRS)

The design of the LDRS is similar to the design of the LCRS. The LDRS will be capable of detecting, collecting, and removing leaks of hazardous constituents through areas of the primary liner during the active life and post-closure care period. A filtered LDRS layer consisting of a geocomposite will be constructed below the primary geomembrane. Within the LDRS layer will be the LDRS piping, which will be used to detect and remove liquid from between the primary and secondary liners. The piping arrangement is shown on Drawing 18 in Volume III.

As demonstrated in the engineering report (Volume III), the LDRS will be (1) constructed with a bottom slope of one percent or more; (2) constructed of a geocomposite with a hydraulic conductivity that exceeds 1×10^{-2} cm/sec; (3) constructed of materials that are chemically resistant to the waste managed in the landfill and the leachate expected to be generated; (4) of sufficient strength and thickness to prevent collapse under pressure exerted by overlying wastes, waste cover material, and equipment used at the landfill; and (5) designed and operated to minimize clogging during the active life and post-closure care period.

In addition, the sump and liquid removal methods are designed to be of sufficient size to collect and remove liquid from the sump and prevent liquid from backing up into the drainage layer (see ALR calculations in Volume VI). A method will be provided for measuring and recording the volume of liquid present in the sump and liquid removed. All pumpable liquid in the sump will be removed in a timely manner to maintain the head on the secondary liner at less than 12 inches. The pump for the LDRS sump is located at the sump's low point so that pumpable liquids can be removed to the maximum extent possible.

2.5.1.5 Vadose Zone Monitoring System

The vadose zone monitoring sump serves as a detection system for leaking in the secondary LDRS system. Located directly beneath the LDRS sump, leakage through the secondary liner system will flow into the vadose sump, allowing it to be detected and removed. The vadose pipe and gravel

arrangement is similar to the LCRS and LDRS arrangements. Drawings 16 through 18 in Volume III show the vadose zone in the sump. Need a reference to the vadose zone wp.

2.5.1.6 Run-On/Run-Off Control

The run-on/run-off system is designed to be constructed, operated and maintained to control at least the water volume resulting from a 24-hour, 25-year storm.

The run-on/run-off control system design is provided in Volumes III and IV. The purpose of the run-on/run-off control system is to ensure that the amount of liquid entering the landfill is kept to a minimum because the liquids could serve as a transport medium for contaminants placed in the landfill, and to prevent any contamination present onsite from migrating off site. Run-on/run-off will be managed according to its source. Three sources of run-on/run-off have been identified for the landfill: (1) run-on to the landfill originating off site; (2) run-off from the active landfill; and, (3) run-on/run-off from the Facility outside of the active portion of the landfill.

Run-on originating off site will be directed around or away from the proposed landfill area using unlined ditches. Based on the topography of the site, the run-on is expected to move from the east/southeast to the west/northwest. This run-on will be diverted directly off site by a stormwater diversion ditch located along the eastern site boundary. Water from outside the landfill will be prevented from entering the active portion of the landfill by the drainage ditches which surround the landfill.

Run-off in the active portion of the landfill collecting in the bottom of the landfill, and does not infiltrate into the LCRS, will be pumped out of the landfill within 24 hours of a storm event. The stormwater pumped out of the landfill will be collected using vacuum trucks. The water will then be sampled and analyzed for hazardous constituents. Contaminated water will be treated either in the stabilization process or the evaporation pond, and treatment residuals will be disposed of in compliance with appropriate regulations.

During the initial stages of the landfill operation, run-off from the landfill side slopes above the liner system will be channeled away from the waste by the slope drainage interceptor ditch. This water will flow to a lined collection basin located at the toe of the inter phase cut slope as shown on Drawings 10 and 13 in Volume III. This water will be handled as clean water because it will not have come in contact with the landfill waste.

Run-off from the Facility, but not from the active portion of the landfill (including run-on/ run-off from the landfill perimeter drainage ditch), will be directed to the stormwater retention basin.

2.5.1.7 Wind Dispersal Control Procedures

Wind dispersal control will consist of a daily soil cover obtained from excavation. Typically, the daily cover will consist of soil spread on top of the waste placement area to a depth of 0.2-foot to 0.5-foot.

Depending on the local wind conditions, traffic, and the number of fine particles in the soil cover, dust may be generated from the surface. Typically, this dust generation is reduced by restricting traffic to predetermined haul roads on the surface of the daily cover and applying small amounts of water spray to moisten the soil surface. The water will be applied with a water truck equipped with a pump, piping, and an array of nozzles that spray very small water droplets onto the soil cover.

The frequency of the water application depends on the climate and traffic. In areas on the daily cover surface where traffic is not present, an occasional water spray will cause a crust to form on the soil surface, inhibiting dust formation. Sufficient moisture will be applied to all soil surfaces, including roads, on an as needed basis to prevent wind erosion of the daily cover. However, the application of

water will be limited so that ponding in the landfill does not occur. Because the water is a topical surface application, the majority of it will evaporate rather than seeping into the waste to become leachate.

2.5.1.8 Gas Generation Management

Because the landfill will not receive MSW or C&D waste, gas generated as a result of biological decomposition of organic wastes will be minimal. Organic wastes placed in the landfill will meet LDRs, which will limit the organic gas generation potential. The waste acceptance procedures at the Facility will be designed to limit receipt of wastes with potential for significant gas generation. The waste acceptance program is described in Section 4.3 and outlines the procedures that will be used to test for reactive cyanides and sulfides, other reactive chemical groups, waste compatibility, and biodegradability of sorbents.

During the operational phase of the landfill, periodic checks will be made within the landfill to detect the presence of hazardous gases and volatile organics. Surveys of the active landfill surface area and the riser pipes with an organic vapor meter (OVM) or comparable device will be performed quarterly to detect the presence of organic compounds. PPE levels and respiratory protection levels will be modified accordingly, if necessary. This testing will be conducted in addition to the fingerprint testing conducted on incoming waste. The data from both tests will be evaluated to determine what steps are necessary to reduce the generation and/or release of these gases to levels which meet prescribed regulatory air quality standards.

Prior to closure of the landfill, an assessment will be made of the landfill waste gas generating potential. This assessment will be based on review of fingerprint test data and data gathered in the landfill during operations. Based on this assessment, if it is concluded that gas generation may result in gas build-ups beneath the barrier layer of the cover or releases following closure exceeding regulatory air quality standards, then provisions will be made to collect and monitor gas generation and release during the post-closure period. If this occurs, the latest technology available will be implemented into the construction of the cover system.

2.5.1.9 Cover Design

The design of the final cover is described in Section 8.0, Closure and Post-Closure of Permitted Units. Additional details of the final cover design are shown in Volume III of this application.

2.5.1.10 Landfill Location Description

The proposed site is in eastern Chaves County, New Mexico.

Geographic Location

The proposed site is located in a remote, unpopulated portion of New Mexico, 36 miles from the city of Tatum. The primary land use in the surrounding area is ranching, which will not be impacted by landfill operations.

Geologic Setting

The proposed site is to be developed within impermeable, geologically stable sediments of the Dockum Group of Triassic age (see Section 3.4). The base of the proposed landfill will be designed to rest on 600-foot thickness of unsaturated mudstone of the Lower Dockum. This thick sequence acts as a geologic barrier to potential vertical migration of contaminants. Potential lateral migration through unsaturated Upper Dockum sediments will be retarded by the low permeability of the host sediments (siltstones and mudstones) and engineered barriers such as the liner systems.

2.5.2 Construction

Construction activities will consist of site preparation; excavation and preparation of landfill bottoms and subsurface sides; and construction of the liner, LCRS, and LDRS in accordance with the specifications and Construction Quality Assurance (CQA) Plan. The CQA plan is included as Appendix B of the engineering report presented in Volume IV.

2.5.2.1 Site Preparation

Existing site drainage will be modified to route any run-on away from the landfill area. Additionally, drainage of the landfill area itself will be modified to route water away from the initial fill area. Access roads and weighing units will be constructed. A fence will also be installed around the Facility. These components and installations are shown in Drawing 4 presented in Volume III.

2.5.2.2 Excavation and Preparation of Landfill Bottom and Subsurface Sides

The landfill will be constructed and excavated in sections to allow a smaller portion of the landfill surface to be exposed to precipitation at any one time. The initial working area of the landfill will be excavated to design depth. The excavated material will be stockpiled on unexcavated soil near the active area for use as cover material. The landfill bottom will be sloped toward the central axis of each phase to provide drainage of leachate to the sump. The EPA minimum required slope of 1 percent has been exceeded in all cases. The upper 6 inches of the subgrade will consist of a soil material which has been sized, moisture conditioned, compacted, and trimmed to provide a smooth stable surface for geosynthetic material placement.

2.5.2.3 Construction Quality Assurance Plan

Appendix B of the engineering report presented in Volume IV of this application contains the Construction Quality Assurance Plan. Implementation of CQA procedures will result in increased leachate collection efficiency and reduced leakage through the landfill and evaporation pond liners. Additionally, use of CQA will result in fewer costly repairs to the landfill after wastes have been received, fewer occasions of exceeding the ALR, and a decreasing need for corrective action.

The CQA Plan describes the CQA procedures for the installation of the soil and geosynthetic components for the hazardous waste landfill, evaporation pond, and other units requiring subsurface containment systems comprised of soils and geosynthetic components constructed at the Facility. These procedures apply to construction of the lining systems and final cover systems, including the LCRS and LDRS systems.

The objectives of the CQA program include the following:

- development of a clearly defined organizational structure within which the project can be planned and completed;
- assurance that the methods, techniques, and procedures used to collect, analyze, verify, and report data will produce sound, documented, and defensible results;
- assurance that equipment or instrumentation used in field or laboratory testing activities has been properly maintained and calibrated as required;
- assurance that the required documentation of quality performance is properly generated and that such documentation is adequate and complete for the activity;

- development of permanent project CQA document files identifiable and traceable to each activity;
- systematic control of items, equipment, materials, or activities not in conformity with established requirements or methods, and assurance of prompt and effective corrective action when nonconforming conditions are identified;
- regular evaluation of the adequacy of the CQA program by means of quality audits coupled with the effective action necessary to correct deficiencies and prevent recurrence;
- assurance that technical and CQA personnel are qualified and trained to perform the work activities to which they have been assigned; and,
- assurance that subcontractors and consultants used in assisting project activities have an acceptable CQA program or are participating in accordance with the Facility CQA program guidelines.

Upon completion of construction activities, the Facility will submit certification signed by the New Mexico registered professional engineer serving as the CQA certifying engineer, which states that the unit has been constructed in accordance with the design drawings, Construction Quality Assurance Plan, and Construction Specifications. Documentation supporting the certification will be maintained in the operating record and will be furnished to the NMED upon request. Wastes will not be accepted at the constructed portion of the landfill until the NMED either approves the certification or waives the approval requirement.

2.5.3 Operation

The landfill will be operated in a safe and proper manner, in accordance with the following requirements:

2.5.3.1 Inspections and Monitoring

Section 5.0, Procedures to Prevent Hazards, contains information on inspections and monitoring.

2.5.3.2 Maintenance and Repairs

The landfill structure will be maintained through a routine preventive maintenance program which will be fully defined in the final site operations plan. Preventative maintenance will involve regular visual inspections of the landfill liner (where feasible) and review of leachate collection and analysis results. Equipment, such as pumps, generators, electrical lighting, and warning systems, will be subject to manufacturer recommended programs. Preventative maintenance information will be documented and any deviation from normal conditions will be closely tracked and corrected as necessary.

2.5.3.3 Warning Signs

Section 5.0, Procedures to Prevent Hazards, contains information about warning signs.

2.5.3.4 Record Keeping

All documentation pertaining to the results of waste analyses, waste compatibility analyses and waste handling compliance will be maintained in the Facility operating record. The Facility will be capable

of determining exactly where a waste has been placed within a three-dimensional grid system. Landfill inspection records will be maintained on file for at least 3 years, in accordance with 40 CFR 264.15(d) (see Section 5.2.2).

2.5.3.5 List of Hazardous Wastes to be Placed in Landfill

The wastes to be placed in the landfill are described in Section 4.0, Waste Analysis Plan.

2.5.3.6 Specific Requirements for Ignitable/Reactive Wastes

Wastes that do not meet LDRs, as defined in Section 4.3.1.2, will not be placed in the landfill. Therefore, untreated ignitable and reactive waste (as defined in 20 NMAC 4.1) will not be placed in the landfill.

Procedures That Render Wastes Nonreactive

Reactive waste will be treated or mixed prior to placement in the landfill so that the resulting waste mixture no longer meets the definition of reactive waste.

Procedures for Preventing Reactions

Reactive waste will be separated from sources of reaction, including but not limited to open flames, smoking, cutting and welding, hot surfaces, frictional heat, sparks, spontaneous ignition, and radiant heat. When reactive waste is being handled, smoking and open flames will not be permitted. "No Smoking" signs written in English and Spanish will be conspicuously placed wherever there is a hazard from ignitable or reactive waste.

Procedures that Render Wastes Nonignitable

Ignitable waste will be treated or mixed prior to placement in the landfill so that the resulting waste mixture no longer meets the definition of ignitable waste.

2.5.3.7 Procedures for Protecting Wastes

Procedures for the handling of incompatible wastes, lab packs, bulk and containerized liquids, and containers that are less than full are discussed below.

Procedures for Ensuring Safe Disposal of Incompatible Wastes

Procedures for identifying incompatible wastes are discussed in Section 4.0, Waste Analysis Plan. Procedures will be developed to ensure that precautions are taken to prevent reactions that (1) generate extreme heat or pressure, fire, or explosions, or violent reactions; (2) produce uncontrolled toxic mists, fumes, dusts, or gases in sufficient quantities to threaten human health and the environment; (3) produce uncontrolled flammable fumes or gases in sufficient quantity to pose a risk of fire or explosion; (4) damage the structural integrity of the device or Facility; or (5) threaten human health and the environment through other means. At a minimum, incompatible wastes will be spaced a sufficient distance apart in the landfill to prevent commingling.

Procedures for Identifying Contents and Ensuring Proper Landfilling of Incoming Lab Packs

Lab packs may be placed in the landfill only if they meet the requirements in 40 CFR 264.316. Containers must be non-leaking and appropriate to the waste being contained. Appropriate non-biodegradable sorbents will be used. The Waste Analysis Plan presented in Section 4.0 will ensure that lab packs meet all of the applicable requirements prior to disposal. As with all other waste, lab

packs must be properly characterized prior to acceptance at the Facility and meet the LDR treatment criteria prior to disposal. Lab packs will not be accepted if incompatible wastes are placed within the same lab pack or if reactive wastes have not been treated to render them non-reactive. Lab packs will meet all applicable LDR (40 CFR 268) requirements.

Special Requirements for Bulk and Containerized Liquids

Bulk and containerized wastes will not be placed in the landfill unless they meet the requirements in 40 CFR 264.314. Containers holding free liquids will not be placed in the landfill unless all free liquid has been eliminated by absorption, decanting, solidification, or other method. Very small containers, such as ampules or containers designed to hold liquids for use other than storage, may be placed in the landfill (40 CFR 264.314[d]).

Special Requirements for Containers

Containers, except those that are very small such as ampules, will be 90 percent full when placed in the landfill. Containers less than 90 percent full will be crushed, shredded, or otherwise reduced in volume to the maximum extent possible prior to placement in the landfill.

2.5.3.8 Action Leakage Rate

The ALR proposed for the landfill is 900 gallons per acre per day (gpad). This proposed ALR was selected based on a discussion in the preamble to the January 29, 1992, final rule for Liners and Leak Detection Systems for Hazardous Waste Land Disposal Units (57 FR 3462). A discussion of the proposed ALR and supporting calculations are presented in the engineering report in Volumes III and VI.

The average daily flow rate in the LDRS sump will be calculated in accordance with the response action plan, discussed in the following section.

2.5.3.9 Response Action Plan

The elements of the response action plan for the landfill and evaporation pond include (1) reducing the head on the liner to the maximum extent possible to aid in the prevention of leaks, (2) determine the failure mechanism of any leaks, and establish procedures to minimize the potential for reoccurrence of this failure mechanism, and (3) responding immediately and appropriately to a leak exceeding the ALR. Each of these elements is described below. The response action plan will apply to both the landfill and the evaporation pond. Activities that apply to the landfill only are specified.

Reducing the Head on the Landfill Liner

The head on the liner will be reduced by:

- monitoring the leachate collection system sumps weekly and after all significant precipitation events; and,

- removing pumpable liquids from the sump when monitoring indicates the presence of liquid. A reasonable effort will be made to remove as much liquid as possible. As previously described, it is standard landfill design practice to locate a low point or sump box in the base of the landfill sump. The pump for the sump is located at this low point, and it is from here that pumpable liquids are removed to the maximum extent possible.

- for the landfill only: if during a heavy rain event, water ponds on the surface of the daily cover, utilize vacuum trucks to remove as much of this water as possible before it can seep into the waste;

Leak Detected Below the Action Leakage Rate

Flow rates less than the ALR are expected under normal operation conditions. However, the following actions will be taken in response to a leak below the ALR:

- determine whether the leak can be attributed to some operational disturbance such as an equipment or power failure;
- verify that the sump pump is working as designed;
- increase the pump rate on the leachate collection system pump;
- for the landfill only: remove all standing water, if any, from the surface of the landfill;
- assess operations to determine if waste receipt should be temporarily curtailed or waste should be removed for inspection, repair, or controls;
- determine if the flow rate varies with precipitation;
- for the landfill only: repair any damage to the exposed portion of the liner in a manner which conforms to original design specifications and by qualified technicians in accordance with the CQA Plan (see Volume IV);
- document any damage and repairs in the Facility operating record; and,
- investigate alternative sources of liquids.

Leak Detected Above Action Leakage Rate

If a leak is detected above the ALR, the following actions will be implemented in response:

- notify NMED within seven days that the ALR has been exceeded;
- determine whether the leak can be attributed to some operational disturbance such as an equipment or power failure;
- verify that the sump pump is working as designed;
- increase the pump rate on the leachate collection system pump;
- for the landfill only: remove all standing water, if any, from the surface of the landfill;
- assess operations to determine if waste receipt should be temporary curtailed or waste should be removed for liner inspection, repair or controls;
- determine if the flow rate varies with precipitation;
- for the landfill only: repair any damage to the exposed portion of the liner;

- document any damage and repairs in the Facility operating record;
- for the landfill only: verify that the waste surface is sloping away from the landfill side slopes;
- for the landfill only: if necessary, regrade waste or place soil to achieve a minimum 1 % slope away from the landfill side;
- investigate alternative sources of liquids;
- have a third-party assessment conducted by an independent New Mexico registered professional engineer;
- review the analysis of the leachate collected from the leachate collection system, attempting to match fingerprint, generator analyses and waste placement records to help determine the source of the leaks;
- for the landfill only: inspect all exposed liner surfaces for damage. This will be accomplished by walking these areas and observing the liner surface for evidence of damage and water inflow. Additionally, the protective soil cover on the side slopes will also be observed for water inflow, sloughing, or excessive erosion which might indicate a liner damage location;
- as required per 40 CFR 264.304(b)(2), submit a written assessment to NMED within 14 days of the determination as to amount and source of liquids; information on possible size, location, and cause of the leak; an assessment of the seriousness of any leakage in terms of potential for releases to the environment; and any immediate and short-term actions to be taken;
- submit a report to NMED within 30 days of exceeding the ALR describing how effective the response actions have been in reducing the leakage rate below the ALR and preventing migration of hazardous constituents out of the landfill; and,
- submit monthly reports to the NMED as long as the ALR is exceeded.

2.5.3.10 Closure

A description of landfill closure is provided in Section 8.0, Closure and Post-Closure of Permitted Units.

2.6 TREATMENT IN EVAPORATION POND

Only waste that meets LDR treatment standards will be placed in the evaporation pond. Waste will be received from off site generators and from the leachate collection system associated with the landfill or other site units (i.e. waste storage areas). Evaporation will be the only treatment occurring in the evaporation pond.

2.6.1 Design of Evaporation Pond

The Facility is proposing design and operating practices for the evaporation pond in accordance with 40 CFR 264.221(c). The evaporation pond design is provided on Drawings 28 through 32 in Volume III and will have an approximate capacity of 4.6 million gallons over an approximate area of 76,500 square feet.

The evaporation pond has been designed as a double-lined unit with a LDRS between the primary and secondary liners. The unit is designed and will be constructed, maintained, and operated to prevent overtopping resulting from normal or abnormal operations; overfilling; wind and wave action; rainfall; run-on; malfunctions of level controllers, alarms, and other equipment; and human error.

2.6.1.1 Liner System

The liner system, shown in Drawings 29 and 32 of Volume III, will include a primary (top) geomembrane liner above a geonet layer and a secondary (bottom) geomembrane liner, supported by 3 feet of compacted clay liner material with a hydraulic conductivity of no more than 1×10^{-7} cm/sec.

The compacted clay surface will provide a stable foundation for the liner and resistance to pressure gradients above and below the liner. The evaporation pond liner system will be located on top of the excavated subgrade which will be located approximately 15 feet below the existing ground surface. At this depth the basal portions of the evaporation pond will lie in either the Quaternary sand or Upper Dockum units. Settlement evaluations presented in the engineering report (see Appendix E in Volume V) demonstrate that either of these units will adequately serve as a foundation for the evaporation pond. Near surface evaporation pond slope areas will be located on top of Quaternary soil materials. The engineering report also presents settlement evaluations for the evaporation pond subgrade within the Quaternary soil materials and stability evaluation of any load bearing embankments.

Design and operating practices, together with the geologic setting of the Facility, will prevent the migration of any hazardous constituent to adjacent subsurface soil, surface water, or groundwater. The top liner is designed to minimize the migration of hazardous constituents through the liner system during the active life and closure period of the evaporation pond. A 60-mil HDPE geomembrane material will be used for the primary liner component. HDPE liners have been shown to be chemically resistant to landfill leachates based on operational performance and on EPA 9090 compatibility tests conducted on actual landfill leachates and synthetically generated leachates. Calculations that define the stresses on the evaporation pond liner system due to thermal expansion and contraction are also provided in the engineering report (Appendix E, Volume VI).

Drawing 32 in Volume III shows that the bottom liner will be a two-component system, including a geomembrane and a compacted clay liner. The lower component, the 3 feet of compacted clay, will minimize the migration of hazardous constituents if a breach through the upper components occurs. Material for the evaporation pond compacted clay liner will be siltstone or mudstone obtained during landfill excavation within the Upper Dockum. During landfill excavation, appropriate siltstone and mudstone materials will be stockpiled and if necessary, conditioned such that compacted soil liner specifications are met. The test results presented in Appendices D and E (Volumes V and VI) indicate that the unprocessed material has an intact permeability close to 1×10^{-7} cm/sec. Therefore, with processing, the material can be placed and compacted to meet the permeability specification of 1×10^{-7} cm/sec or less. Additional laboratory tests will be conducted on processed siltstone and mudstone samples during the test fill program to confirm their permeability characteristics.

The liners will be constructed of materials that will be chemically resistant to the waste managed in the evaporation pond and any liquid that has accumulated in the leak detection system. The liner system materials will have appropriate chemical properties and sufficient strength and thickness to prevent failure as a result of pressure gradients, physical contact with the waste or leaked liquid to which they are exposed, climatic conditions, the stress of installation, and the stress of daily operation.

Information pertaining to the chemical properties and physical strength of the liner system materials was supplied by the manufacturer and is included in the construction specifications presented in Volume IV.

The geonet drainage system is capable of effectively minimizing the head developing on the secondary evaporation pond liner. Geonet clogging, which reduces the overall drainage capacity, has been incorporated into the design of the drainage system as a factor of safety. This safety factor has been applied in the ALR calculation presented in the engineering report (Volumes III and VI). This approach is suggested in EPA guidance for determining the ALR in the preamble to the January 29, 1992, final rule for Liners and Leak Detection System for Hazardous Waste Land Disposal Units (57 FR 3462).

Stresses on geosynthetics during installation are likely to be negligible. The evaporation pond slope lengths will be less than 40 feet, and the slope ratio is relatively shallow, causing little tensile stress to be exerted in the liner. Also, there will be no horizontal seams in the geosynthetic liner material. Traditional anchoring methods will be used. 60-mil HDPE material will be used, which, when properly installed and welded, is of sufficient tensile strength to withstand the stresses of installation.

2.6.1.2 Leak Detection and Removal System/Vadose Monitoring System

The LDRS consists of a geonet layer of cross-linked ribbed HDPE, a sump, and associated detection and liquid removal pipes. A pump located in the LDRS pipe will be used to remove leachate accumulating in the leachate collection systems. When leachate accumulates, it will be pumped to a tanker truck and either returned to the evaporation pond, stabilized in the onsite treatment unit, or stored in one of the liquid waste storage tanks.

The LDRS unit will have the following characteristics:

- be constructed with a bottom slope of 1% or more;
- be constructed of synthetic or geonet drainage materials with a minimum transmissivity of 5×10^{-3} m^2/sec;
- be constructed of materials that are chemically resistant to the waste managed in the evaporation pond and any leachate generated in the landfill;
- of sufficient strength and thickness to prevent collapse under pressure exerted by overlying wastes, and equipment used at the evaporation pond;
- designed and operated to minimize clogging during the active life and closure period of the evaporation pond; and,
- constructed with sump and liquid removal methods.

LDRS details are presented Drawing 32 in Volume III. The LDRS will be sloped so that any leachate below the primary liner will drain to the centrally located sump. The sump pit design is also shown in the drawing.

The collection system has been designed to be of sufficient size to collect and remove liquids from the sump and prevent liquid from backing up into the drainage layer. A sump pump and associated piping will be installed in the lower portion of the sump. The sump system will be covered with gravel to bring the area to the level of the evaporation pond floor. The gravel will serve as an expanded drainage layer providing space for the piping.

The sump system will be provided with a method for measuring and recording the volume of liquids present and the volume of liquid removed. All pumpable liquids in the sump will be removed in a timely manner to maintain the head on the bottom liner below 12 inches.

A pump operating level will be established to ensure that backup into the drainage layer does not occur, and the head in the sump is maintained at less than 12 inches.

Methods and equipment to be used to measure and record liquid handling volumes during evaporation pond operation will include survey monuments and elevation rods, flow meters, and fluid level transducers. Elevation rods will be placed in the evaporation pond following pond construction. The rods will be fixed to a ballasted base, which will rest on the primary geomembrane liner. The rods will have graduated markings from which pond liquid elevations and critical freeboard levels can be observed and pond volumes can be determined. Rod elevations will be checked periodically by survey. Flow meters will be used to record volumes of liquid discharged into the pond and removed from the LDRS drainage system sump. The transducers located in the LDRS sump will provide a reading for the liquid levels in the sump at any time during operation. The evaporation pond vadose monitoring sump serves as a detection system for leakage of the LDRS sump. Leakage through the secondary liner system will flow into the vadose sump. This will allow the leakage to be detected and moved. The vadose pipe and gravel arrangement is similar to the LDRS arrangement.

2.6.1.3 Separator Berm System

The evaporation pond design incorporates a separator berm between the two pond sections, Pond 1A and Pond 1B (see Drawing 28 in Volume III). This pond design provides two independent storage areas. Thus, in the event that a leak should occur in one section of the pond, liquids could be pumped into the other section until repairs are completed. Two feet of freeboard will be maintained in the evaporation pond at all times. The evaporation pond design and ongoing proper maintenance of the unit will ensure sufficient structural integrity to prevent massive failure. The evaporation pond will be of sufficient volume and freeboard capacity to contain the 100-year 24-hour storm event. This design capacity, coupled with the management of surface water and routine inspections, will help prevent overtopping (see Section 2.6.4.3).

2.6.1.4 Run-On/Run-Off Control

Section 2.5.1.5 contains information on run-on/run-off control for the landfill, which is also pertinent to the evaporation pond.

2.6.1.5 Evaporation Pond Location Description

As indicated in Drawing 4 presented in Volume III, the evaporation pond, will be located in the northwest corner of the active portion of the Facility.

2.6.2 Construction

Construction activities will consist of site preparation; excavation, and preparation of the bottom and sides of the evaporation pond; construction of dikes; installation of the liners, LDRS and vadose system; and CQA.

2.6.2.1 Site Preparation

Existing site drainage will be modified to route any run-on away from the evaporation pond area. Access roads and a truck discharge station will be constructed. These engineered controls and components are shown on Drawings 4, 5, and 31 in Volume III.

2.6.2.2 Excavation and Preparation of Evaporation Pond Bottom and Subsurface Sides

The evaporation pond will be constructed and excavated to a design depth of approximately 15 feet. The excavated material will be stockpiled for future use. The evaporation pond bottom will be constructed with a 2% (approximate) slope toward the central sump location.

2.6.2.3 Structural Fill Areas

Areas of the evaporation pond requiring structural fill will be constructed according to the specifications presented in Volume IV.

2.6.2.4 Liner, LDRS, and Vadose System Installation

Three feet of clay will be installed directly on the excavated subgrade, forming the lower portion of the secondary liner. The clay will have a permeability of 1×10^{-7} cm/sec or less. A geomembrane liner will be placed over the entire clay liner, including the sump area and the separator berm. A geonet layer of cross-linked ribs, which will serve as the LDRS, will be installed next. The sump and associated piping will then be installed, and gravel will be placed in the depression to bring the surface level of the sump area to that of the evaporation pond floor. A filter geotextile will surround the gravel in the sump area to protect the geomembrane liner and to reduce the sediment clogging of the geonet.

The liners will be installed to cover all surrounding soils likely to be in contact with the waste or leachate.

The sump pump and pressure transducers (or other) liquid detection device will be installed next to the LDRS and vadose pipes during construction. These devices will be attached to a control panel. Any time liquids are detected at a specified level, the sump pump will be activated and the liquid will be removed. The pump activation level is related to the sump design and pump type selected. The wastewater will be sampled, analyzed and handled in accordance with the Facility requirements.

2.6.2.5 Construction Quality Assurance Plan

Section 2.5.2.3 contains information detailing the CQA Plan. In addition, the CQA plan is contained in Volume IV of this application.

2.6.3 Nature and Quantity of Waste

Hazardous wastes which may be placed in the evaporation pond include all wastes listed in Part A of the application (Volume I), provided that LDR treatment standards are met prior to placement of the wastes. Potential contaminants in the wastewater will include those found in wastes accepted at the landfill and in other wastes as specified in the Waste Analysis Plan (see Section 4.0). In general, these wastes include RCRA hazardous wastes and TSCA PCB wastes (less than 50 ppm), excluding the waste types listed in Section 2.5.1.1.

2.6.4 Operation of the Evaporation Pond

Operation of the evaporation pond will involve three main activities: (1) waste acceptance and receiving; (2) placement of wastewater into the evaporation pond; and (3) inspection, monitoring, and repair of the unit. Each of these activities is described below.

2.6.4.1 Waste Acceptance and Receiving

Off site generators must provide a full characterization of their waste to the Facility prior to receiving approval to ship the waste to the Facility. After approval has been received, shipment of waste to the Facility will proceed as described in Section 2.1.2. Tanker trucks will then transport their waste to the tanker discharge pad at the evaporation pond.

Once the waste is received onsite, it will be sampled and fingerprint tested to verify that it is the same waste that was previously characterized. Landfill leachate waste must also be sampled and analyzed prior to being placed in the evaporation pond. Waste analysis and fingerprint testing are more fully described in Section 4.0, Waste Analysis Plan. This waste analysis and characterization data will be used to ensure that the waste acceptance criteria specified in the RCRA permit are met and to identify any safety precautions that must be taken to properly manage the waste.

Following a determination that the leachate from the landfill meets the acceptance criteria, the waste will be pumped from the leachate collection tank to a tanker truck. Approved leachate trucks and off site waste trucks will transport the waste to the tanker discharge pad at the evaporation pond.

Landfill leachate collection waste and off site waste that is determined not to meet LDR treatment standards will be treated in the stabilization unit or shipped to other appropriate treatment facilities.

2.6.4.2 Placement of Wastewater into the Evaporation Pond

Tanker trucks will be unloaded directly into the evaporation pond through a series of hoses, valves and pipes. The tanker discharge pad will be constructed of concrete and will be sloped toward the evaporation pond to drain any spills or leaks into the pond. Details of the tanker discharge pad are provided in Sheets 1 and 2 of Drawing 31 (Volume III).

2.6.4.3 Inspections, Monitoring, and Repairs

The evaporation pond structure and dikes will be maintained through a routine inspection program. The freeboard level will be routinely inspected to ensure that approved or acceptable freeboard levels are maintained and that overtopping does not occur. Pond overtopping will be controlled operationally by maintaining evaporation pond fluid levels below the freeboard elevation and by ensuring that any storm water run-on from surrounding areas is diverted around the evaporation pond. Grading of the surrounding surface area has been included as a part of the surface water management. Inspections will occur on a weekly basis and after storms to detect evidence of deterioration, malfunction, improper operation of overtopping control systems or sudden drops in the waste level. The liner exposed above the operating pond level will be inspected to make sure that the liner is not damaged.

The engineering report includes a discussion of the evaporation pond LDRS ALR (see Section 4.0 in Volume III). LDRS drainage layer flow capacity, LDRS sump capacity, fluid head calculations, and flow rate conversions are included, as well as response actions for ALR exceedance.

The two evaporation pond sections allow for one section of the pond to be removed from service if the liquid level suddenly drops for an unknown reason. If liquid losses exceed daily evaporation losses and no other reasonable explanation is found, then that section of the evaporation pond will be shut down and authorities at the NMED will be notified immediately. If a section of the evaporation pond must be removed from service, flow of waste to that section will be stopped, leakage will be stopped by draining the pond to below the level of the leak, surface leakage will be contained, and all necessary steps will be taken to repair the liner system and prevent a future failure. Responses to such situations, including NMED notification, are described in Section 6.0, Contingency Plan.

Additional inspection and monitoring information is provided in Section 5.0, Procedures to Prevent Hazards.

2.6.4.4 Specific Requirements for Ignitable, Reactive, and/or Incompatible Wastes

Wastes that are ignitable, reactive, and/or incompatible will not be placed in the evaporation pond at the same time. Waste acceptance procedures, described in Section 4.0, Waste Analysis Plan, will ensure that such wastes are not inadvertently placed together in the evaporation pond.

2.6.4.5 Warning Signs

Section 5.0, Procedures to Prevent Hazards, contains information on warning signs.

2.6.4.6 Record Keeping

All documentation pertaining to the results of waste analyses or waste compatibility analyses will be maintained in the Facility operating record. Inspection records will be maintained in the inspection log for the evaporation pond.

2.6.4.7 Action Leakage Rate

The proposed ALR for the evaporation pond is 1,000 gpad. This ALR was selected based on a discussion in the preamble to the final rule for Liners and Leak Detection Systems for Hazardous Waste Land Disposal Units (57 FR 3462), in which the EPA indicates that an ALR below 1,000 gpad should not be required.

The average daily flow rate to the sump system will be calculated and recorded weekly during the active life and closure period of the evaporation pond to ensure that the ALR is not exceeded.

2.6.4.8 Response Action Plan

The response action plan is described in Section 2.5.3.9.

2.6.4.9 Closure

A description of how hazardous waste residues will be removed from the evaporation pond at closure is provided in Section 8.0, Closure and Post-Closure of Permitted Units.

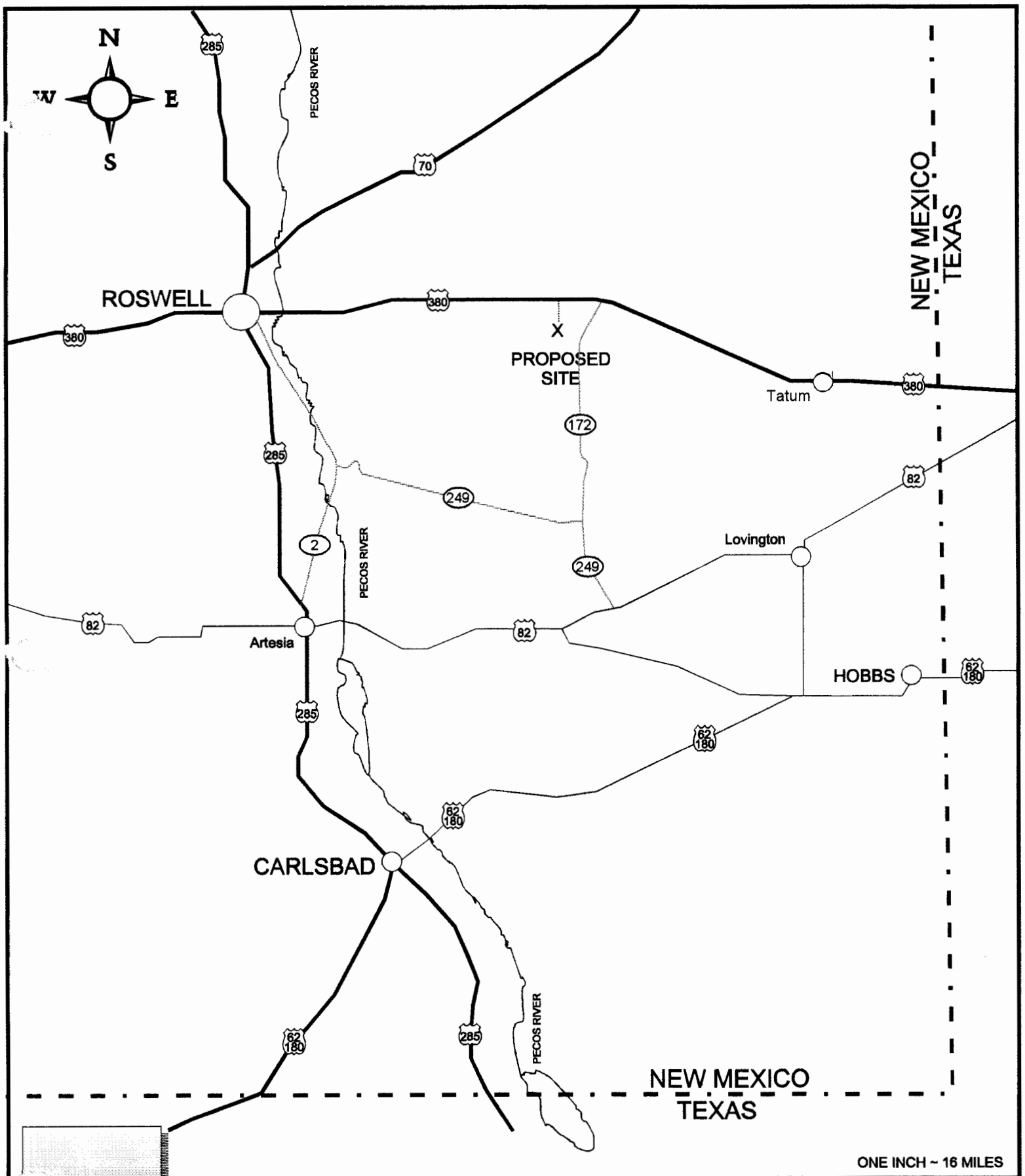

SITE LOCATION MAP

TRIASSIC PARK WASTE DISPOSAL FACILITY

Figure 2-1

3.0 GROUNDWATER PROTECTION

Section 3.0 presents historical and 1994 field data, which demonstrate that the proposed landfill at the Facility will not impact groundwater resources. The EPA's RCRA Groundwater Monitoring Technical Enforcement Guidance Document was used in the preparation of this material.

The proposed Facility is located in a remote portion of eastern Chaves County, New Mexico, 36 miles from the city of Tatum (see Figure 3-1). Section 3.1, Geographical Setting and Topography, describes the favorable physical attributes of the proposed site location.

Climatic conditions, which are favorable for the efficient and environmentally safe operations of the proposed landfill and the ability to provide long-term isolation of hazardous waste, are described in Section 3.2. Data in this section were obtained from the National Oceanic and Atmospheric Administration's (NOAA's) recording station at Roswell, New Mexico.

Section 3.3, Soils and Land Use, describes soils, ranching, and other land uses in the area surrounding the proposed site. This section shows that the proposed hazardous waste disposal activities should have no impact on the existing occupational or recreational use of the surrounding land.

The regional and local geologic setting of the proposed landfill site is detailed in Section 3.4. Sediments of the Dockum Group of Triassic age are proposed as host rocks for this Facility. These unsaturated and low permeability sediments represent a stable geologic barrier to potential migration of contaminants from the proposed site.

Section 3.5, Surface Water and Water Balance, describes surface waters and meteorological conditions used to estimate groundwater recharge at the proposed site. Results from this section show that the proposed site's low groundwater recharge rate significantly reduces the potential for migration of contaminants to groundwater.

Regional and local aquifers are described in Section 3.6. This section documents the lack of groundwater present in the proposed Triassic host rocks and presents contaminant transport modeling results that demonstrate that the proposed landfill design, in conjunction with the site's geologic setting, will meet or surpass all RCRA minimum technology requirements.

Section 3.7, Groundwater Protection Requirements, presents the design of the groundwater monitoring network for the proposed Facility.

Section 3.8, Summary and Conclusions, summarizes the detailed technical data, which demonstrate that the proposed Facility is situated in a hydrologic setting that will assure long-term isolation of hazardous wastes from the environment. Technical data to support this conclusion are contained in the appendices included with this application in Volume II.

3.1 GEOGRAPHICAL SETTING AND TOPOGRAPHY

The proposed site is located in a remote portion of eastern Chaves County in New Mexico. The proposed Facility area is located in the eastern half of Section 18 and western half of Section 17, T11S, R31E, encompassing 480 acres.

This site is approximately 4 miles south of U.S. Highway 380, which provides the main access to the property. Roswell, New Mexico is approximately 43 miles west of the proposed site, and Tatum, New Mexico is approximately 36 miles to the east. Other New Mexico communities in the region include Lovington (42 miles to the southeast) and Artesia (50 miles to the southwest).

3.1.1 Physiographic Setting

The proposed site lies within a region of transition between the northern extension of the Chihuahuan Desert and the Southern High Plains. The Caprock escarpment, located approximately 2 miles east of the proposed site, delineates the western boundary of the Southern High Plains province, which, in west Texas and eastern New Mexico, is known as the Llano Estacado. The Llano Estacado is a flat-lying elevated plain, whose grass-covered surface is remarkably different from the wind-blown, sandy desert environment to the west.

3.1.2 Topography

The proposed site is located on the far eastern flank of the Pecos River Basin. The land surface gently slopes to the west at approximately 40 to 50 feet per mile toward the river. This sloping plain is characterized by low-relief hummocky wind-blown deposits, sand ridges, and dunes. The average elevation above sea level of the proposed site is 4,150 feet.

The Caprock escarpment (or Mescalero Rim) is one of the most prominent topographic features in southeastern New Mexico. East of the proposed site, the escarpment has approximately 200 feet of relief. On top of the Caprock, the land surface consists of low-relief undulating plains.

Figure 3-2 contains a portion of the USGS topographic map coverage of the proposed site. The Caprock escarpment is well illustrated in the southeastern corner of the mapped area. The proposed site and surrounding area are covered by two USGS 7½° quadrangle maps: Mescalero Point and Mescalero Point NE.

3.2 CLIMATE

The information used to evaluate the climate of the project area was obtained from climatological data summaries from the Class A recording station in Roswell, New Mexico. This recording station is part of the National Climatic Center of NOAA. The local climatological data summaries provided extreme and normal values of the meteorological parameters (for the period of record at the Roswell Municipal Airport and more recent data from the Roswell Industrial Air Center) that were used to characterize the area's climate.

The climate of the region is semiarid, with generally mild temperatures, low precipitation and humidity, and a high evaporation rate. Winds are most commonly from the south and moderate. During the winter, the weather is dominated by a high-pressure system often situated in the central portion of the western United States and a low-pressure system commonly located in north-central Mexico. During the summer, the region is affected by a low-pressure system normally situated over Arizona.

3.2.1 Temperatures

Moderate temperatures are typical throughout the year, although seasonal changes are distinct. Mean annual temperatures in southeastern New Mexico are near 60°F (Eagleman, 1976). Temperatures in December through February show a large diurnal variation, averaging 36°F at Roswell. On approximately 75 percent of winter mornings, temperatures are below freezing, and afternoon maximum temperatures average in the high fifties. Afternoon winter temperatures of 70°F or more are not uncommon. Nighttime lows average near 23°F, occasionally dipping as low as 14°F. Generally, there are only two or three winter days when the temperature fails to rise above freezing.

Table 3-1 shows the average monthly and average daily maximum/minimum temperatures recorded for Roswell for a typical year.

3.2.2 Precipitation

Precipitation is light and unevenly distributed throughout the year and averages 10 to 13 inches. Winter is the season of least precipitation, averaging less than 0.6 inch of rainfall per month. Snow averages about 5 inches per year at the site and seldom remains on the ground for more than a day because of the typically above-freezing temperatures in the afternoon. Approximately half the annual precipitation comes from frequent thunderstorms in June through September. Rains are usually brief but occasionally intense when moisture from the Gulf of Mexico spreads over the region.

Precipitation for the project area varies greatly from year to year. For example, Roswell's record low annual precipitation is 4.35 inches. The maximum 24-hour rainfall was 5.65 inches in October 1901. The record annual high is 32.92 inches. Most years are either "wet" or "dry"; few are "average." An average precipitation rate for Roswell, for a 107-year period from 1878 to 1982, is 10.61 inches per year. Table 3-2 shows monthly precipitation rates for the Roswell area for a five-year period and compares annual rates to the average precipitation.

3.2.3 Wind

Prevailing winds are from the south, with a normal mean wind speed at Roswell of 9.6 mph. An annual wind rose for a four-year period is shown in Figure 3-3. This wind rose shows the predominant southerly winds occurring 14 percent of the time.

3.3 SOILS AND LAND USE

The proposed site is located in a rural portion of Chaves County, New Mexico. This section describes soil profiles of the land surface in this area, existing vegetation, and the current land usage.

3.3.1 Soil Profiles

Information on soil profiles at the proposed site has been obtained from the National Cooperative Soil Survey. This survey covers Chaves County and was made cooperatively by the Soil Conservation Service, the BLM, and the New Mexico Agricultural Experiment Station.

There are two types of soils present on the proposed site. The Roswell-Faskin-Jalmar Association is present on the sandy slopes throughout the property. The Alama Series is restricted to topographically lower drainage areas and is associated with flood plain deposits.

3.3.1.1 Roswell-Faskin-Jalmar Association

This association consists of excessively drained and well-drained soils with slopes of 0 to 15%. The association is about 40% Roswell soils, 25% Faskin soils, 15% Jalmar soils, and the remainder being a mixture of various soil types. The soils of this association are used for grazing and wildlife habitat. Vegetation is mainly sand dropseed, little bluestem, sand bluestem, sandbur, three-awn, shinnery oak, yucca, and sand sagebrush. Elevation ranges from 3,500 to 4,100 feet. The frost-free season ranges from 190-205 days per year.

Roswell soils are deep, gently undulating to rolling, and rapidly permeable. They are found in hummocky or billowy areas of deep sands. They consist of a surface layer of light brown fine sand. The underlying material is pink fine sand.

Faskin soils are deep, level to nearly level, and moderately permeable. They are intermingled with Roswell soils in depressions. They have a surface layer of brown and strong brown fine sand and loamy fine sand. The subsoil is yellowish red sandy clay loam and reddish brown clay loam.

Jalmar soils are deep, evenly deposited, and moderately permeable. They are intermingled with Roswell soils in depressions. They consist of a surface layer of brown, reddish yellow, and yellowish red fine sand and loamy fine sand. The subsoil is light reddish brown, heavy loamy fine sand, and sandy clay loam.

3.3.1.2 Alama Series

The Alama Series consists of deep, well-drained soils formed in alluvium on flood plains. Slopes are 1% to 3%. Elevation is 3,400 to 3,600 feet. These soils are used for grazing, watershed, and wildlife habitat. Vegetation is mainly tobosa, buffalo grass, vine-mesquite, mesquite, and cactus. The frost-free season ranges from 200-215 days per year.

In a representative profile, the surface layer of these soils is brown loam about 3 inches thick. The subsoil is reddish brown clay loam and silty clay loam about 16 inches thick. The substratum is stratified reddish brown and light reddish brown sandy clay loam, silty clay loam, and loam to a depth of 69 inches or more. The soil profile is strongly calcareous and moderately alkaline throughout.

Permeability is moderately slow, and available water capacity is 11 to 12 inches. Effective rooting depth is 69 inches or more.

3.3.2 Land Ownership and Use

The property for the proposed site is owned by Marley Ranches, Ltd. Adjacent lands are both federally and privately owned. Generally, lands to the west are owned by the BLM, and lands to the east are privately owned.

The predominant land use in this area is grazing. With existing vegetation, approximately one section of land is required to sustain five animal units year-long. Intermittently, the land is the site of exploratory drilling for gas and oil wells, but there are no abandoned well sites within the proposed Facility boundary, and the nearest production well is approximately 3 miles from the proposed site.

The BLM has developed a recreation area known as Mescalero Sands approximately 2 miles northwest of the proposed site. The recreation area allows hikers and recreational vehicles in the sand dunes.

3.4 GEOLOGY

This section describes the regional and geologic setting of the proposed landfill.

3.4.1 Regional Geology

The geologic formations present within the region range in age from Quaternary through Triassic. Those include Quaternary alluvium, Tertiary Ogallala Formation, and the Triassic Dockum Group. Permian sediments do not outcrop in this region but, because they underlie the proposed host sediments, they are also discussed in this section.

3.4.1.1 Regional Stratigraphy

The stratigraphic relationship of the formations discussed in this section is illustrated in Figure 3-4. Information concerning formation tops and thicknesses was obtained from well logs from the New Mexico OCD office in Hobbs, New Mexico. Appendix B presented in Volume II contains a representative oil well log.

Quaternary

The surface throughout the project area is covered by alluvial deposits of Quaternary age. These deposits are comprised of fine-grained, red-brown sands, interbedded with red-brown silts and clays. A major source of these sediments was the topographically higher Ogallala Formation, as evidenced by the abundant granitic cobbles, chert pebbles, and fragments of petrified wood found throughout this unit. The thickness of these alluvial deposits along the eastern flank of the Pecos River Basin in Chaves County varies from a few feet to as much as 50 feet.

Tertiary

The "Caprock," which is the surface expression of the Tertiary Ogallala Formation, unconformably overlies Triassic sediments in southeastern New Mexico. This flat-lying sandstone and conglomeritic unit is approximately 300 to 400 feet thick. It consists of fluviatile sand, silt, clay, and gravel capped by caliche. The sand deposits of the Ogallala Formation consist of fine- to medium-grained quartz grains, which are silty and calcareous. Bedding features range from indistinctly bedded to massive to crossbedded. The formation varies from unconsolidated to weakly cohesive and contains local quartzite lenses. The sand intervals of the Ogallala Formation occur in various shades of gray and red.

Ogallala Formation silt and clay deposits are reddish brown, dusky red, and pink and contain caliche nodules. Gravels occur as basal conglomerates in intra-formational channel deposits and consist primarily of quartz, quartzite, sandstone, limestone, chert, igneous rock, and metamorphic rock. There are abundant petrified wood fragments throughout this unit.

Triassic

Triassic sediments are the potential host rocks for the proposed Facility and, as such, are described in more detail than the other formations. The Depositional Framework of the Lower Dockum Group (Triassic), Texas Bureau of Economic Geology, No. 97, 1979, by McGowen was used as a major reference for gathering information on the characteristics of Triassic sediments.

Triassic sediments unconformably overlie Permian sequences in Texas and New Mexico and have been classified as the Triassic Dockum Group. The Dockum Group is comprised of a complexly interrelated series of fluvial and lacustrine mudstone, siltstone, sandstone, and silty dolomite deposits that can be as much as 2,000 feet thick in this part of the Permian Basin. These sediments accumulated in a variety of continental depositional settings, including braided and meandering streams, alluvial fan deltas, lacustrine deltas, lacustrine systems, and mud flats.

The Triassic Dockum Group is divided into an Upper and Lower Unit. The Upper Dockum Unit is very near the surface within the project boundary, covered only by a thin veneer of Quaternary sediments. The character of this unit, also know as the Chinle Formation, is a series of fluvial sediments. These sediments conformably overlie the Lower Dockum Unit and consist of red-green micaceous mudstones, interbedded with thin, discontinuous lenses of siltstone and silty sandstones. A continental fluvial depositional environment predominated during Upper Dockum time, when the Triassic basin was filled with lacustrine sediments. The Chinle Formation is widespread in the southwestern United States.

The Lower Dockum accumulated in a fluvial lacustrine basin defined by the Amarillo Uplift on the north and the Glass Mountains on the south (Figure 3-5). As presented in this basin map, the Lower Dockum represents sediments from a large, regional depositional system. For any given portion of this basin, these sediments tend to be very homogeneous and not subject to abrupt local changes. This basin was peripherally filled, receiving sediment from the east, south, and west. Chief sediment sources were Paleozoic sedimentary rocks. Lowlands to the east and west were traversed chiefly by meandering streams. Higher gradient streams with flashy discharge existed at northern and southern

ends of the basin. The large shallow lake (or lakes) was the last portion of the basin to be filled. The lacustrine sediments that accumulated here consist primarily of low-energy mudstone.

The proposed site, situated on the western flank of the Triassic paleobasin, is underlain by thick sequences of Lower Dockum mudstones. In Triassic times this area was dominated by meandering streams. The former tectonic belts were more than 200 miles away, and the regional slopes were relatively low. Surface exposures today in these areas consist of thick sequences of maroon-red-purple variegated mudstones with thin discontinuous layers of siltstones and silty sandstones.

The stratigraphy of Lower Dockum sediments in east-central New Mexico is significantly different from that of the proposed site. Figure 3-6, a subsurface sand percent map of this unit, was compiled from drill hole data from more than 1,500 oil wells throughout the basin. Thick sequences of sandstones at the northern and southern portions of the basin are shown projecting inward toward the center of the basin. In the New Mexico portion of this basin, these sand accumulations are related to the occurrence of the Santa Rosa Sandstones. This medium-to-coarse grained, white to buff sandstone represents the lowermost Triassic depositional unit and is a major aquifer in this portion of New Mexico.

Figure 3-6 illustrates that the great accumulation of Santa Rosa Sands that fills the northern portion of the Triassic paleobasin pinches out before reaching the Facility site. During the Lower Dockum time, the Facility site was part of a low-relief area with little fluvial deposition. The McGowen report specifies sand percentages of the Lower Dockum group in the Facility site area to be in the 10-20% range. This is consistent with data gathered from the two deeper drill holes completed north and south of the site boundary. There is a basal sand unit in the Lower Dockum below the site, but it appears not to be depositionally related to the Santa Rosa Sandstone.

Permian

Permian sediments are important to the geologic setting because they are immediately below the proposed Triassic host rocks. The deeper formations of Permian age were deposited in a restricted-marine environment and thus contain salt deposits, which make the groundwater produced from them too brackish for use.

Permian sediments underlying the Triassic units in the project area are assigned to the Artesia Group. Oil well logs from the New Mexico OCD in Hobbs, New Mexico, have provided sufficient data to identify the Dewey Lake Formation, Rustler Formation, and Yates Formation from the upper portion of this group. Geologic literature describes these Permian sediments to be gently dipping to the east. This fact was confirmed by using oil well log data to construct a graphic 3-point solution, as shown in Figure 3-7. Using the top of the anhydrite (Rustler) as a marker bed, the following simple calculations were made:

Known Point Elevations of Marker Bed

A = Lowest elevation - 2,975 feet
C = Highest elevation - 3,148 feet
B = Middle elevation - 3,091 feet

Strike Determination

Strike is defined as the direction of a horizontal line along the bedding plane and is calculated as follows:

D = point along AC with the same elevation as B (BD is strike)

$$AD = AC \times \frac{\text{difference in elevation between A and B}}{\text{difference in elevation between A and C}}$$

$$AD = 18{,}500 \text{ ft} \times \frac{3091 - 2975}{3148 - 2975} = 12{,}405 \text{ ft}$$

$$CD = 18{,}500 \text{ ft} - 12{,}405 \text{ ft} = 6{,}095 \text{ ft}$$

BD = direction of strike = N6°E

Dip Determination

Dip is defined as the angle of the bedding plane measured from a horizontal line perpendicular to the strike and is calculated as follows:

E = point along strike, therefore, E(elevation) = B(elevation)

$$\text{Tangent of dip angle} = \frac{E(\text{elevation}) - A(\text{elevation})}{AE}$$

$$\text{Tangent of dip angle} = \frac{3091 \text{ ft} - 2975 \text{ ft}}{7520 \text{ ft}} = \frac{116 \text{ ft}}{7520 \text{ ft}} = .015$$

$$\text{Dip angle} = \text{Tangent}^{-1}(.015)$$

Dip angle = 0°52'

These calculations indicate a north-south strike and a dip of less than 1° to the east. These results are consistent with the reported regional dip for Permian (and Triassic) sediments along the western flank of the Permian Basin.

Dewey Lake Formation—The uppermost Permian sediments underlying the Triassic sequence in the project area correlate to the Dewey Lake Formation. These sediments are predominately red to red-brown mudstones and siltstones and are virtually indistinguishable from the overlying Triassic sediments. Geologic literature reports a conformable relationship between these sediments and the overlying Triassic sediments. There are approximately 240 feet of Permian redbeds in this section.

Rustler Formation—The top of the Rustler Formation was identified on OCD well logs and corresponds to the top of a 40-foot bed of anhydrite. These anhydrites are visible in outcrop on the hills immediately east of the Pecos River drainage east of Roswell, New Mexico. Underlying the anhydrite are approximately 500 feet of halite (salt). The Rustler Formation represents the youngest anhydrite sequence in the Permian Basin.

Yates Formation—Unconformably underlying the Rustler, the Yates Formation is composed primarily of interbedded sandstone with minor dolostone and limestone. The sands are light gray and fine to very fine grained. Limestone is white to very light gray microcrystalline lime mudstone with a chalky texture. Dolostone is pink to light gray and microcrystalline.

3.4.1.2 Regional Structure

The tectonic setting and seismic activity are discussed in this section.

Tectonic Setting

The proposed Facility site is located on the western flank of the Permian Basin of west Texas. Because of the distance from tectonic centers and the minimal seismic activity, this is considered one of the more geologically stable regions within the United States.

The region underwent intense deformation, however, during late Paleozoic times. As shown in Figure 3-5, major uplifting occurred along the Ouachita Tectonic Belt and the Wichita System of Texas and Oklahoma. The Sacramento and Sangre de Cristo uplifts in northeastern New Mexico were also active during late Paleozoic time. The overall structural configuration of the Permian Basin was established at this time.

This period of intense deformation was followed by a long period of gradual subsidence. The sea covered the region, and throughout the remainder of Permian era, the Permian Basin was slowly filled with several thousand feet of evaporites, carbonates, and shales. As discussed in Section 3.4.1.1, non-marine deposition began in Triassic time with the accumulation of lacustrine/fluvial sediments into a large shallow lake.

During the late Cretaceous to early Tertiary Laramide Orogeny, there was renewed uplifting along the Sacramento, Sangre de Cristo, and other ranges within the Rocky Mountains. This orogeny uplifted the region to its present position and supplied sediments for the Tertiary Ogallala Formation.

Seismic Activity

The Permian Basin is an area of moderate to low seismic activity. Data obtained from the National Geophysical Data Center of NOAA indicate a total of 102 observed earthquakes within a 250-km (155-mile) radius of the proposed site. These data reflect observations made from 1930 to 1993.

As shown in Figure 3-8, there were no recorded earthquakes with a magnitude greater than 3.9 within 70 miles of the proposed site and no recorded seismic activity within a radius of 45 miles. The distance from any tectonic centers and the low recorded seismic activity suggest that the proposed site is located in an extremely stable environment where activity is not expected. Consequently, little damage from earthquake activity is anticipated.

3.4.2 Site Geology

Figure 3-9 illustrates the surficial geology on and adjacent to the proposed site. This section will provide detailed descriptions of the proposed Triassic host sediments and the Quaternary alluvium that overlies these sediments only.

3.4.2.1 Site Stratigraphy

Specific data for this section was obtained through drilling activities described in Section 3.4.3. Figure 3-10 is a stratigraphic cross-section based on this drilling, illustrating relationships between the proposed Triassic host sediments and adjacent formations. Other site-specific cross-sections are located in Volume II, Appendix G.

Quaternary

The thickness of Quaternary alluvial deposits at the site varies from less than 10 feet to 35 feet. The upper portion of these sediments consists of fine to very fine, wind-blown yellow-brown sands. Below this sand are varying thicknesses of red-brown to yellow-brown siltstones and silty mudstones. Scattered throughout these sediments are small chert pebbles and granitic cobbles derived from the Tertiary Ogallala Formation.

A caliche zone (Mescalero Caliche) is present in most of this unit. The caliche is found immediately under the top wind-blown sands and coats and fills fractures within the more consolidated siltstones. Where the Quaternary alluvium is quite thin, this caliche is found coating Triassic sediments.

Triassic

Drilling at the site has delineated 1,175 feet of Dockum sediments. Two distinct units can be identified in these sediments: the Upper Dockum (475 feet thick) and the Lower Dockum (700 feet thick). Within the proposed Facility boundary the thickness of the Upper Dockum unit never exceeds 100 feet. Upper Dockum sediments are in contact with the overlying Quaternary alluvium throughout the project area.

Upper Dockum—This unit consists of variegated (red-brown-green) mudstones interbedded with reddish gray siltstones and reddish-gray-green sandy siltstones. The siltstones are micaceous (predominantly muscovite), indicating they were part of a relatively active fluvial system capable of transporting material into the basin from distant source rocks.

From examination of lithology and down-hole electric logs, it is estimated that 30 percent of the unit is comprised of mudstones. Lithologies of the remainder of the unit are evenly divided between siltstones and sandy siltstones. However, as the geotechnical properties of these two lithologies are very similar, this geologic discussion will simply refer to them both as siltstone. Mudstones were found to have an average permeability of 2.45×10^{-7} cm/s, and the siltstones average 1.22×10^{-5} cm/s.

These sediments were deposited in a fluvial environment. Mudstone and siltstone bodies are very lenticular and are found to pinch out abruptly. Accordingly, individual lithologies are not correlatable over significant distances (thousands of feet).

Cross-sections prepared from the close-spaced drilling within the proposed Facility boundary establish an understanding of the fluvial nature of this unit (see Appendix G in Volume II). Figure 3-11 shows the locations of drill holes for the close-spaced drilling pattern and provides an index of cross-sections that illustrate the character of the Upper Dockum Unit. Also shown on Figure 3-11 is the location of the "most favorable" area for the construction of the proposed landfill. As shown in the cross-section on Figure 3-12, the lithology of this area (centered on drill hole PB-4) is predominantly mudstone, with thin beds of siltstones. The lenticular nature of the mudstone and siltstone bodies is also shown in these cross-sections. Cross-sections 3-1 and 3-2, in Appendix G (Volume II), show the facies relationships of the "most favorable" area.

The fluvial nature of the Upper Dockum Unit has led to the scouring of channels into the underlying Lower Dockum Unit. This scouring and the pinching-out of fluvial sediments have resulted in the local development of an undulatory surface on top of the Lower Dockum Unit. This phenomenon is well illustrated in Cross-sections 3-3, 3-4, and 3-5, in Appendix G (Volume II).

Lower Dockum —The Lower Dockum Unit, described in Section 3.4.1.1, has a completely different character from the upper unit. The lower unit represents a time of relatively quiet lacustrine deposition, which resulted in the accumulation of thick sequences of predominantly mudstones interbedded with thin siltstones. These sediments are very homogeneous, in contrast with the abrupt facies changes present in the more active Upper Dockum depositional system.

Most of the close-spaced drilling within the proposed Facility boundary "bottomed" in Lower Dockum mudstones. These mudstones were consistently a moderate reddish brown color, which according to McGowen (1979), is associated with low stand lacustrine and mud flat deposition.

The 1995 confirmation drilling provided some important data on this unit. As illustrated in Figure 3-13, all three holes penetrated the clays of the Lower Dockum unit. PB-36 encountered 64 feet of this unit, PB-37 encountered 55 feet, and PB-38 encountered 18 feet. Ten feet of core of Lower Dockum were collected from PB-36 at a depth of 138 to 148 feet and 7 feet of Lower Dockum were collected from PB-37 at a depth of 148 to 155 feet. Four representative samples of this core were sent to AGRA Earth & Environmental laboratories for permeability analyses. The results of these analyses

confirm the Lower Dockum to be a very impermeable unit (average permeability of 5.7×10^{-8} cm/s), capable of performing as a geologic barrier to downward migration from the proposed landfill. Following are the results of the core analyses:

Core Interval	Permeability (cm/sec)
PB-36 (144'-145')	5.2×10^{-8}
PB-36 (147'-148')	6.8×10^{-8}
PB-37 (150'-151')	5.8×10^{-8}
PB-37 (154'-155')	4.9×10^{-8}

3.4.2.2 Site Structure

There are no identified faults within the project area. As previously discussed, the proposed site is located in a geologically stable area. There are no mapped faults on or adjacent to the project area. Color air photos of the area were examined for surface lineations, which can reflect faulting in the subsurface. All surface lineations observed on these photos were attributed to man-made features (i.e., fences, roads, etc.).

Subsurface drilling did not encounter displacement or repeating of geologic sequences that would be indicative of faulting. In the Upper Dockum Unit, there are abrupt changes in lithologies, but these are attributed to depositional processes associated with an active fluvial system.

3.4.3 Site Investigation Activities

Triassic sediments in eastern Chaves County were initially identified as excellent host rocks for proposed hazardous waste disposal because they (1) contain thick sequences of low permeability clays; (2) occur in remote, unpopulated areas; and (3) produce virtually no groundwater. This section describes the series of exploration activities undertaken to verify and document the suitability of the site for hazardous waste disposal.

As part of this permit application, a total of 41 drill holes were completed. The lithologies of these holes were recorded and a geophysical log was run on each drill hole. Thirty-one of these drill holes were completed within the project boundary (Figure 3-14).

3.4.3.1 Preliminary Evaluation Activities

The first phase in determining an appropriate disposal site was to identify potential sites with exposed or near-surface Triassic sediments. To identify such sites, color aerial photos were obtained of areas underlain by Triassic sediments in eastern Chaves County (Figure 3-15). The areas exhibiting the characteristic coloration associated with the Triassic sediments on the photos were then plotted on topographic maps. The locations with desirable geology were screened for additional factors, including accessibility and land ownership. From this process, a prioritization of sites was developed and a shallow drilling program designed.

In July and September 1993, two shallow drilling programs were conducted to examine Triassic sediments underlying the Quaternary alluvium. Average depth of these holes was 40 to 60 feet, and the drilling was conducted on a spacing of approximately 1,000 feet between holes. As shown in Figure 3-16, three areas encompassing seven sections were examined. The objective of this drilling was to identify an area where the Triassic sediments were unsaturated, were situated close to the surface, and contained low permeability clays. An Ingersol Rand 1500 air rotary drill was used to perform this work. This air rotary technique was used because of the high quality of drill cuttings it produces and because the presence of any subsurface water can be easily detected.

Of all areas investigated, the surface and near-surface geology in the vicinity of Red Tank (the proposed site) was found to be the most favorable. Over most of this area, the thickness of Quaternary alluvium averaged approximately 10 feet, and the shallow drilling indicated the presence of unsaturated mudstones underlying the alluvium. Five shallow core holes were completed, adjacent to rotary air holes, to obtain preliminary geotechnical data on the near-surface Triassic sediments. As a result of the shallow depth of these sediments, many of the clays were very dry and brittle. This presented some difficulty in obtaining "undisturbed" core samples. Despite these difficulties, materials testing results showed low permeabilities for Triassic clays, ranging from $1x10^{-7}$ to $3x10^{-8}$ cm/s. These values, along with the local geologic setting, established the Red Tank area as an area conducive to more detailed site characterization.

Two deep holes (WW-1 and WW-2) were drilled to the base of the Dockum Group in November 1993. These holes encountered an unsaturated thickness of 600 to 650 feet of Lower Dockum mudstones consisting primarily of reddish brown, maroon, and purple mudstones with thin intervals of reddish brown silts.

Lithologic logs developed from cuttings samples and down-hole geophysical logs (gamma and thermal neutron) confirm the homogeneity of this thick mudstone interval. In addition, samples of drill cuttings from one of the deep holes (WW-2) were taken to the University of New Mexico's Diagnoses Laboratory for a grain size analysis. This analysis showed a remarkably constant grain size distribution throughout the sequence, which is consistent with the technical definition of a mudstone. This procedure involved desegregating, centrifuging, drying, wet sieving, and weighing the samples. A complete procedure and the results of this analysis are contained in Volume II, Appendix F.

The 600- to 650-foot mudstone interval rests on a basal sandstone unit that is approximately 50 feet thick. This basal unit is present in oil well logs in the area as a clean to a silty sand. The deep drilling did not retrieve any cuttings from this basal unit. The drilling was performed with air, and the moisture in this unit prevented the return of cuttings to the surface. Casing was placed in these holes, and water levels were taken (Section 3.6.2).

WW-1 and WW-2 were drilled north and south of the project boundary to characterize the nature of the Lower Dockum. Because of the consistent, continuous depositional environment within the lacustrine sediments at the Lower Dockum, it was decided (and approved by the NMED) that is was unnecessary to penetrate the entire Lower Dockum sediments within the site boundary. Such penetration would have certainly violated the integrity of the formation in the area of the planned hazardous waste landfill and in all likelihood would not have provided additional geologic information.

3.4.3.2 1994 Site Characterization Activities

In June 1994, a drilling plan for site characterization activities at the proposed site was prepared and submitted to the Hazardous and Radioactive Materials Bureau of the New Mexico Environment Department. The plan identified drilling locations, depths and methods, proposed geotechnical tests and methods, and down-hole geophysical logging methods. The 100-foot depth was sufficient to penetrate the base of the Upper Dockum (with the exception of the easternmost portion of the site). The plan was approved as submitted.

Drilling operations commenced on July 17, 1994 and a total of 36 drill holes were completed. There were three distinct phases of this drilling program: (1) close-spaced pattern drilling in the area of the proposed site (to a depth of 100 feet) to obtain detailed lithologic and hydrologic information for the design of a landfill, (2) stratigraphic drilling across the project area (to a depth of 200 feet) to correlate the site geology with the regional setting, and (3) selected core drilling in the proposed site for geotechnical samples. Samples of drill cuttings were collected and logged for each hole (see Volume II, Appendix C). Southwest Geophysical Services, Inc. conducted down-hole geophysical logging of

each drill hole. These electrical surveys consisted of thermal neutron and gamma logs. The electric logs provide lithologic information from unsaturated drill holes to supplement and verify the lithologic interpretations based on drill cuttings. Copies of all geophysical logs can be found in Volume II, Appendix D.

A rotary air rig (Ingersol Rand 1500) was used for this work. Drilling with air provides cleaner drill cuttings than drilling with water, and usually a good indication of water saturation. However, in the case of the Upper Dockum sediments on the Facility site, this drilling technique was not always successful in identifying water saturation. This failure was a result of the low to very low permeabilities of the silty sands and the low amount of water saturation. The pressure of the air from the drilling process prevented water from immediately entering the holes. If groundwater was present, it was not always detected until the hole had stabilized and a geophysical log was taken. Geophysical logs on all 31 drill holes within the site boundary encountered no saturated Upper Dockum sediments.

Three core holes were completed and a total of 85 feet of core recovered. A CME-55 hollow-stem auger rig using a continuous sampler was used to collect these samples. The dry, brittle nature of these shallow, unsaturated sediments made the recovery of undisturbed core samples difficult.

Representative core samples of mudstones, siltstones, and sandy siltstones were sent to materials testing laboratories for measurement of geotechnical parameters to be used in the Facility design and contaminant transport modeling. In addition to core samples, 11 backhoe pits were dug adjacent to drill holes for the collection of bulk samples. Proctor tests were performed on these bulk samples to provide information required for design studies. All geotechnical results are contained in Volume II, Appendix E.

3.4.3.3 1995 Confirmation Drilling Program

In order to confirm the unsaturated nature of the Upper Dockum sediments on the eastern boundary of the proposed Facility, a drilling plan was submitted to Mr. Bob Sweeney of NMED on June 26, 1995. This plan was modified and approved in a letter from Mr. Ronald A. Kern, dated July 12, 1995. A three-hole drilling program was conducted on the GMI site on July 24 & 25, 1995. Mr. Bob Sweeney visited the site and observed the drilling operations on Monday, July 24, 1995.

Holes PB-36, PB-37, and PB-38 were completed as an extension to an existing east-west line of drill holes. The westernmost drill hole was located on the eastern boundary of the proposed landfill. The other two holes were drilled 1,000 feet apart and examined the area immediately east of the proposed landfill. All surface locations for these drill holes were surveyed.

No groundwater saturation was encountered. All holes were completed with air so that saturated sediments could have easily been detected. Lithology logs describing drill hole cuttings were prepared in the field and down-hole geophysical logs were run on each hole. The geophysical logs included gamma ray, thermal neutron, and caliper profiles.

3.5 SURFACE WATER AND WATER BALANCE

This section describes surface waters and meteorological conditions used to estimate groundwater recharge at the proposed site.

3.5.1 Surface Water

There are no perennial stream drainages on or near the proposed site. The nearest surface drainage is the Pecos River, approximately 30 miles to the west.

There is one small stock tank (Red Tank) within the proposed Facility boundary and several additional tanks on adjacent lands. These tanks are approximately 200 feet by 200 feet and contain water for livestock. The tanks are clay-lined and retain water from run-off or receive water from an underground pipeline. Water in the underground pipeline is supplied from three water wells on the Marley Ranch located in Section 10, T11S, R31E. These wells are east of the Mescalero Rim and produce water from the Ogallala Formation. In the past, water from the springs along the Caprock excarpment was used in this pipeline, but now water is pumped from the Ogallala Formation. The pipeline is personally owned and maintained by the Marley Ranch to provide water to cattle operations below the Caprock.

Once the site is designated as a disposal area, cattle operations on this property will cease and the Marley Ranch will stop using Red Tank. They will also re-route their personal pipeline, as appropriate, to avoid landfill operations and continue to supply water to their cattle operations below the Caprock.

3.5.2 Water Balance

The water balance analysis estimated groundwater recharge from direct precipitation, surface water bodies, and irrigation at the proposed landfill site. This information is useful for assessing the potential migration of contaminants released at or near the surface to groundwater. Groundwater recharge rate is directly related to the potential for contaminants spilled or leaked at the surface to reach groundwater. In areas with little or no groundwater recharge, there is less potential for groundwater contamination from releases of hazardous substances than in high recharge areas because the mechanisms to transport potential contamination are limited.

A water balance requires quantification of the hydrologic components, which can result in changes in the amount of water stored in the area of interest. Often, water balances are calculated for an entire watershed to understand the relative importance of the hydrologic components within that area. For this analysis, the water balance was performed to estimate groundwater recharge at the proposed landfill site.

Groundwater recharge at the proposed site can be estimated by summing precipitation, infiltration from surface water bodies, and irrigation at the site and subtracting evapotranspiration and surface run-off. As no natural surface water bodies or irrigation occur at the site, groundwater recharge is estimated as the difference between direct precipitation and evapotranspiration. This assumes no surface run-off at the site.

Precipitation data collected at the Roswell weather station indicate that mean annual precipitation is 10.61 inches (Section 3.2.2). This annual mean is used as the average precipitation at the proposed site.

Evapotranspiration refers to the processes that return water to the atmosphere by a combination of direct evaporation and transpiration by plants and animals. It is the largest item in the water budget because most of the precipitation that falls in the area returns almost immediately to the atmosphere without becoming part of the surface water or groundwater systems. On unirrigated rangeland, much of the precipitation that does not evaporate immediately is taken up fairly rapidly by plants and transpired. In a regional water balance conducted in southeastern New Mexico, it was estimated that approximately 96 percent of total precipitation is lost to evapotranspiration (Hunter, 1985). This number corresponds to data presented for the Rio Grande Basin by Todd (1983), which estimated that 95.4 percent of total precipitation was being lost to evapotranspiration.

Assuming a mean annual precipitation rate of 10.61 inches, of which 96 percent is lost to evapotranspiration, the net recharge to groundwater is estimated as 0.42 inch per year. This low

groundwater recharge rate significantly reduces the potential for groundwater contamination from spills or leaks at the proposed Facility.

The purpose of this water balance is to provide a conceptual understanding of the hydrologic components at the site. The amount of groundwater recharge is a reflection of the arid climate of the region. The net recharge estimate of 0.42 inch per year (based on average hydrologic components) represents the expected long term annual conditions at the site. The relatively low recharge rate appears to be reasonable given the unsaturated conditions of the Upper Dockum within the site boundaries. Using the highest recorded annual precipitation value of 32.92 inches yields only a slightly higher recharge rate of 1.32 inches (assuming an evapotranspiration rate of 0.96). This short term (1 year) increase in recharge is unlikely to have a significant impact on the unsaturated flow regime at the proposed site.

3.6 GROUNDWATER

This section describes regional and local aquifers.

3.6.1 Regional Aquifers

In the region surrounding the proposed site, there are two geologic units that have produced groundwater, the Triassic and the Tertiary Ogallala Formation. Very minor amounts of groundwater have been produced from Triassic sediments; but the Tertiary Ogallala Formation is a major aquifer in southeastern New Mexico, west Texas, and several other western states.

A listing of all water wells within a 4-mile radius of the proposed site was obtained from the New Mexico State Engineer's office. Sixteen water wells were reported, fourteen from the Ogallala Formation and two from the Triassic. Of the two Triassic wells, one is now reported to be dry and the other is actually located more than 6 miles west of the proposed site. These water wells, along with oil well locations and the locations for all site investigation drilling activities, are shown in Figure 3-17.

3.6.1.1 Ogallala Aquifer

The Ogallala Aquifer is the primary freshwater aquifer within the regional study area and serves as the principal source of groundwater in the Southern High Plains. The saturated thickness of the Ogallala Aquifer ranges from a few feet to approximately 300 feet in the Southern High Plains. Groundwater within the Ogallala Aquifer is typically under water table conditions, with a regional hydraulic gradient toward the southeast ranging from approximately 10 feet/mile to 15 feet/mile. The average hydraulic conductivity of the Ogallala Aquifer ranges from 1 foot/day to 27 feet/day.

The Ogallala Aquifer is recharged primarily through the infiltration of precipitation. The rate of recharge is believed to be less than 1 inch/year. Groundwater discharge from the Ogallala Aquifer occurs naturally through springs, underflow, evaporation, and transpiration, but groundwater is also removed artificially through pumpage and catchment. Currently, the rate of withdrawal exceeds the rate of recharge for much of the Ogallala Aquifer.

3.6.1.2 Triassic

Regionally, the only aquifer within Triassic sediments is the Lower Dockum Aquifer. However, because the Upper Dockum is known to have permeable facies that locally produce low quantities of good to poor quality water, it is included in this section.

Lower Dockum Aquifer

The major aquifer within the Lower Dockum is the Santa Rosa Sandstone. This sandstone is present along the northern and southern flanks of the Permian Basin and is a principal source of groundwater in Roosevelt and Curry Counties, New Mexico. The Santa Rosa Sandstone is not present along the western flank of the Permian Basin, which includes the proposed site.

Where the Santa Rosa Aquifer has been studied, hydrochemical analyses and groundwater oxygen isotopes indicate that it is distinctly different from the Ogallala Aquifer. The thick, impermeable clays within the Triassic section have been sufficiently impermeable to prevent hydraulic communication between these aquifers.

Upper Dockum Aquifer

There is no regional aquifer developed within Upper Dockum sediments. In local areas, recharge to the Upper Dockum is provided through vertical infiltration from overlying aquifers which are water-bearing units within the Ogallala Formation. This relationship has been illustrated in Figure 3-10.

3.6.2 Site Groundwater

Potential Triassic host sediments within the proposed Facility boundary are unsaturated. Detailed drilling within this boundary has encountered no groundwater. Drilling outside the proposed Facility boundary has identified saturated zones in both the Upper and Lower Dockum Units. The following subsections contain descriptions of these saturated zones.

3.6.2.1 Ogallala Aquifer

The western boundary of the Ogallala Aquifer, represented by the Caprock escarpment, is located topographically/stratigraphically above and 2 miles east of the proposed site. At the base of the escarpment, along the contact of the Ogallala Formation and the underlying Upper Dockum, are numerous springs, which are a result of downward-migrating Ogallala groundwater coming into contact with low permeability zones within the Upper Dockum and being diverted to the surface.

3.6.2.2 Upper Dockum - "Uppermost Aquifer"

For the purpose of this application, the uppermost aquifer is considered to be the Upper Dockum Unit because the Ogallala Aquifer is not present at the site. The EPA has defined the uppermost aquifer as the geologic formation, group of formations, or part of a formation that is the aquifer nearest to the ground surface capable of yielding a significant amount of groundwater to wells or springs. The Upper Dockum Unit certainly does not yield a significant amount of groundwater. However, preliminary drilling in the site area has found portions of this unit to be water-bearing and to possess consistent hydrologic characteristics.

The identification of a confining layer on the lower boundary is an essential factor in the identification of the uppermost aquifer. The thick sequence of mudstones of the Lower Dockum Unit (as discussed in Section 3.4.2.1) represents a high-integrity aquitard, effectively confining the aquifer. Although there is a saturated basal sandstone in this unit, the 600 to 650 feet of mudstones separating the Upper Dockum sediments from this sandstone are of sufficiently low permeability to prevent hydraulic communication between the Upper and Lower Dockum Units.

As previously discussed in Section 3.6.2.1, several springs are present where the Ogallala Formation crops out, two miles east of the Facility site, along the 200-foot high Caprock escarpment. These springs are present where the Ogallala sands unconformably overlie impermeable Dockum mudstones and claystones and the groundwater moves laterally to the surface. Where these water-bearing

Ogallala sands are in contact with more permeable units of the Upper Dockum, saturation of these underlying sediments occurs. The result, as illustrated in Figure 3-10, is the formation of a groundwater divide east of the proposed site. The majority of the groundwater entering the Upper Dockum flows to the east, conforming to the regional dip of the unit. There is also a minor flow component which slopes away from the unconformable contact, creating a steep hydraulic gradient towards the west. This gradient does not extend beneath the Facility site. As shown in Figure 3-18, this gradient must lie immediately east of PB-38, which is still unsaturated, whereas holes WW-1, and PB-26 are saturated.

Where groundwater has been observed in the Upper Dockum, not all lithologies within the unit are saturated. Air drilling through these sediments found the mudstones to be unsaturated. The more permeable sandy siltstone facies were water-bearing below depths of 135 to 150 feet. These saturated lithologies were encountered approximately 2,500 feet east (downdip) of the proposed landfill site, beyond the proposed Facility boundary (Figure 3-18). It is extremely significant that this saturation does not extend beneath the Facility site. All 31 drill holes within the site boundary, as shown on Figure 3-14, were unsaturated. For this reason, there were no groundwater production tests conducted.

Exploratory drilling west of the proposed Facility boundary (updip), near the outcrop of the Upper Dockum Unit, the small sandy hills located along the section line between Section 18, T11S, R31E and Section 13, T11S, R30E, encountered an isolated occurrence of groundwater (Figure 3-18 and Cross-section 3-3). In a single drill hole (PB-14), at a depth of 42 feet, a small accumulation of groundwater was found in a depression developed on the surface of the underlying Lower Dockum mudstones. This depression is consistent with the "scouring" of the Upper Dockum fluvial sediments into the Lower Dockum mudstones (Section 3.4.3.2). Closer spaced drilling in the vicinity of this occurrence encountered no other such accumulations. This isolated "pooling" is most likely a result of surface run-off entering the subsurface from the nearby outcrop and being caught in a small "stratigraphic trap."

Because of the identification of groundwater in borehole 14, an offset (borehole 14o) was completed 400 feet to the east (down-gradient). This borehole location was in addition to those pre-approved by the NMED, but determining the potential extent of groundwater saturation was important. Borehole 14o was drilled to a depth of 100 feet.

There was no saturation observed while drilling this offset, but the geophysical log indicated the presence of fluid at the bottom of this borehole. The top of the fluid was observed to be at a depth of 92.0 feet, indicating a maximum apparent concentration of 3.5 feet. This is an apparent concentration because a 2.25 inch probe will displace approximately one-half of the volume of the hole. Regardless of all of these factors, there was approximately one gallon of fluid in the bottom of this borehole introduced by a heavy rainfall that occurred after the hole was drilled and before it could be logged. Due to the impermeable nature of the Lower Dockum mudstones, the water did not infiltrate into the formation and was trapped in the bottom of the hole.

The hole was cased with 3-inch plastic tubing and monitored for several weeks. No additional water entered the hole, and, in fact, the gallon of water eventually dispersed into the Lower Dockum. An examination of the log for PB-14o shows the bottom of the sandy silt unit (Upper Dockum) to be a depth of 36 feet. If the Upper Dockum was the source of the water, the hole would have equilibrated or filled to a depth of at least 36 feet. The fluid did not migrate upward through several hundred feet of Lower Dockum mudstones; therefore, there is no apparent subsurface source for the small quantity of water shown in the log for this hole.

Water Level Measurements— After the stratigraphically trapped water (Cross-section 3-3, Appendix G, Volume II) was encountered, temporary casing was placed in the drill hole (PB-14) so that piezometric water levels could be measured. For the first six weeks after casing the drill hole, the water was pumped from the hole weekly. After each pumping event, the water returned to a static

level of 42 feet. Subsequent water level measurements have confirmed a static water level in this drill hole.

In addition to casing drill hole PB-14, nine other drill holes, located downdip, were also cased. Although the Upper Dockum is unstaturated in these other drillholes, the holes were examined weekly for six weeks. No water was observed except for that previously described in PB-14o. The drill holes that were cased with 3-inch plastic casing and the perforated intervals for these holes are as follows:

Hole No.	Perforated Zone	Base of Upper Dockum
PB-14	30-80	42'
PB-14o	20-40	36'
PB-33	20-55	52'
PB-18	60-80	78'
PB-16	60-80	79'
PB-15	30-65	62'
PB-13	30-50	48'
Hole No.	**Perforated Zone**	**Base of Upper Dockum**
PB-9	40-80	72'
PB-7	20-40	38'
PB-17	60-85	80'

The intent of installing casing in these 10 holes was to allow any groundwater in the vicinity of these drill holes to collect for detection purposes. The depths of the cased intervals varied because there is an approximate 1° regional dip to the east. All cased intervals extend down to the bottom of the Upper Dockum sand. Slits were cut in the PVC casing every foot throughout the perforated zones.

Water Quality— Preliminary water quality data were obtained from limited chemical analyses on a sample of the stratigraphically trapped groundwater from drill hole PB-14. These results include the following measurements:

Total Dissolved Solids	4,920 mg/L
Alkalinity	396 mg/L
Sodium	1,640 mg/L
Magnesium	103 mg/L

These preliminary data indicate that water from the Upper Dockum is of poor quality. The most significant parameter is total dissolved solids (TDS); water with TDS values of greater than 5,000 mg/L is considered to be unfit for human consumption.

3.6.2.3 Lower Dockum Aquifer

The basal sandstone of the Lower Dockum Unit is the water-bearing portion of this unit. As shown in Figure 3-19, this unit is overlain by a thick sequence (600 to 650 feet) of low permeability mudstones that act as an aquitard. The recharge area for the Lower Dockum Aquifer is the Pecos River drainage to the west. Groundwater flow direction is easterly, along the regional dip of this unit.

Most of the shallow drilling in the site area has "bottomed" in the upper portion of the aquitard. Two holes (WW-1 and WW-2) were drilled to approximately the base of the Triassic section and encountered water from the Lower Dockum Aquifer (Figure 3-18). Hole WW-1 also penetrated a

saturated zone in the Upper Dockum Unit, resulting in a mixing of these groundwaters in this drill hole.

Both holes were drilled with an air rotary rig and drill cutting samples were collected. WW-1 was completed to a depth of 820 feet and, at the time of drilling, no water saturation was apparent in the drill cuttings. WW-2 was completed to a depth of 710 feet; however, circulation was lost at a depth of 645 feet. Loss of circulation commonly occurs when drill cuttings are too wet for the air pressure of the rig to remove the cuttings from the hole. It is likely that the basal sandstone of the Lower Dockum Unit was penetrated at this depth.

Water Level Measurements— Temporary plastic casing was placed in each of the two holes immediately after completion. In July 1994, geophysical logs were run for each hole, and water levels were identified. WW-1 had a water level of 155 feet. This level is 20 feet above the Upper/Lower Dockum contact, and it is likely that groundwaters from both units are present in this drill hole. A water level of 467 feet was observed for WW-2. This finding indicates that there is a hydrostatic head pressure within the Lower Dockum Aquifer of 178 feet.

Both of these cased holes were pumped and allowed to recover. After a sufficient recovery period, a static water level (155 feet for WW-1 and 467 feet for WW-2) was maintained.

Water Quality— Preliminary water quality data are presented only for WW-2. This drill hole encountered groundwater from the Lower Dockum. Because groundwater from the Upper Dockum and Lower Dockum was mixed in drill hole WW-1, preliminary water quality data from WW-1 do not accurately characterize either aquifer and are not presented. The results from WW-2 include the following:

Total Dissolved Solids	18,800 mg/L
Alkalinity	83 mg/L
Sodium	7,030 mg/L
Magnesium	87 mg/L

These preliminary data indicate that the water quality of the Lower Dockum is very low. The extremely high TDS values are indicative of long formation retention times, which reflects low groundwater flow and low permeability conditions within the Lower Dockum aquifer.

3.6.3 Contaminant Transport Modeling

For the purpose of this application, two types of groundwater modeling were performed to estimate contaminant transport times. One approach is extremely conservative and presents a "worst case" scenario. One of the many conservative assumptions used in these calculations, despite field evidence, is that contaminant transport will take place under saturated conditions. A second, more realistic approach, assumes unsaturated flow conditions.

3.6.3.1 Saturated Flow Modeling

Saturated flow modeling was used to simulate potential leakage or infiltration from the Facility landfill. The objective of contaminant transport modeling was to calculate the time necessary for a hypothetical leak from the landfill to reach the uppermost aquifer. Travel time was calculated using a steady-state groundwater flow model. The model was based on results of the site investigation and geologic characterization, which indicated that perched groundwater exists upgradient and downgradient of the site (Section 3.6.2.2).

Perched groundwater located approximately 2,500 feet downgradient of the proposed landfill is the uppermost aquifer that could be affected by a contaminant. For the purpose of calculating travel time

to the uppermost aquifer, contaminants were assumed to travel from the location of the Upper Dockum/Lower Dockum interface at borehole PB-3 to the perched groundwater downgradient of the site (Figure 3-18). This location was chosen for contaminant transport modeling because it represents the shortest distance from the proposed landfill to downgradient groundwater. The Lower Dockum unit will act as a barrier limiting the vertical migration of contaminants because of its lower permeability and contaminated groundwater will preferentially migrate along the Upper Dockum/Lower Dockum contact until reaching the uppermost aquifer, located 2,500 feet downgradient of the site.

The following assumptions were made during modeling groundwater flow and contaminant transport to the uppermost aquifer. All of these assumptions are believed to be conservative in that they result in shorter travel times to the uppermost aquifer:

- It was assumed that contaminants would migrate completely through siltstones, along the Upper Dockum/Lower Dockum contact. A saturated hydraulic conductivity value of the siltstone unit (1.22×10^{-5} cm/s) was used for calculating travel time. In reality, both higher permeability siltstones and lower permeability mudstones (2.45×10^{-7} cm/s) will exist along the migration pathway. As contaminant velocity is directly proportional to the permeability value that is used in the calculation, using a value approximately two orders of magnitude greater than the lower permeability unit results in an extremely conservative estimate of travel time to the uppermost aquifer.

- It is reasonable to assume that any lateral migration of contaminants from the proposed landfill will occur in the most permeable units (siltstones/sandstones) within the Upper Dockum unit. However, the fluvial depositional environment of the Upper Dockum resulted in the formation of discontinuous lenses of various lithologies. This discontinuous deposition pattern (facies changes) is well illustrated in cross-sections shown in Figure 3-13. Using these cross-sections as a specific example, any lateral migration within the siltstones/sandstones at the base of the Upper Dockum unit will encounter a lower permeability mudstones facies approximately 1,000 feet downgradient from the eastern edge of the proposed landfill. This permeability barrier will severely retard continued migration. In the contaminant modeling for this section, these lithologic changes were not credited. Instead, it was assumed that there was a continuous siltstone/sandstone migration pathway from the proposed landfill to the uppermost aquifer. This assumption, based on the discontinuous, fluvial deposition environment within the Upper Dockum, is considered to be conservative;

- To provide an additional degree of conservatism for the travel time calculations, a non-reactive contaminant was assumed to be transported in the groundwater at the interstitial water velocity. Most contaminants are reactive, which results in longer travel times. The ratio of the reactive transport time to non-reactive travel time is given by the retardation coefficient. The retardation coefficient can be calculated, for organic contaminants, by using Equation 1:

Equation 1

$$R = 1 + \frac{(\rho_b * F_{oc} * K_{oc})}{\phi}$$

where:

R = retardation coefficient
ρ_b = bulk density
K_{oc} = organic carbon partition coefficient

F_{oc} = fraction of organic carbon
ϕ = porosity

- For a typical reactive compound such as trichloroethylene (TCE), a retardation coefficient of 4.89 is calculated using measured values of 0.0089 for the fraction of organic carbon, 1.96 g/cm^3 for bulk density, and 0.48 for the porosity of the siltstone; and a handbook value of 107.15 cm^3/g for the organic carbon partition coefficient (Knox et al., 1993). This means that TCE would require 489 percent more time to reach the uppermost aquifer than a non-reactive contaminant;

- The Upper Dockum sediments in the area of the proposed landfill and extending approximately 2,500 feet downgradient from the landfill are unsaturated. For the purpose of this contaminant transport modeling, it was assumed that these sediments were saturated and that lateral migration occurred under steady-state conditions. Due to our understanding of the subsurface conditions of the Upper Dockum unit at the proposed site, this assumption is also considered to be conservative. Assuming saturated conditions results in a conservative estimate of travel time to the uppermost aquifer because unsaturated hydraulic conductivities are orders of magnitude less than saturated values, especially at low water contents (Fetter, 1988). Assuming saturated conditions may result in slightly underestimating hydraulic gradients, especially at short distances; however, at longer distances hydraulic gradients will approach saturated values. Most importantly, while hydraulic gradients vary only by a factor of two or three, this variation is more than offset by the use of values for hydraulic conductivity. The hydraulic conductivity values are orders of magnitude greater during saturated conditions.

- Saturated hydraulic conductivity and porosity values for the Upper Dockum siltstone used during modeling were based on laboratory tests of cores collected during the drilling program. Average saturated hydraulic conductivity and porosity values for the siltstone were 1.22 x 10^{-5} cm/s and 0.48, respectively.

- Travel time was calculated using a steady-state model represented by Darcy's Law as shown in Equation 2 (Fetter, 1988).

Equation 2

$$q = K_{sat} \frac{dh}{dl}$$

where:

q = darcy flux

K_{sat} = saturated hydraulic conductivity
h = hydraulic head
l = length

- The hydraulic gradient used in the model was calculated by dividing the elevation difference between the location of the hypothetical leak and the perched downgradient water (4055-4025) by the distance between these sites (2,500 feet). This calculation results in a hydraulic gradient of 0.012 and a darcy flux of 1.46 x 10^{-7} cm/s.

- Interstitial water velocity was calculated using Equation 3. Water content was assumed to be 0.48 based on the assumption of saturated flow.

Equation 3

$$v = \frac{q}{\theta}$$

where:

v = interstitial water velocity
q = darcy flux
θ = water content

The results of the modeling indicate that a solute would travel at an interstitial velocity of 3.05×10^{-7} cm/s and would require 7,920 years to reach the uppermost aquifer. This estimate of travel time is extremely conservative for the following reasons: (1) the saturated hydraulic conductivity of the siltstone used in the calculations is two orders of magnitude greater than the hydraulic conductivity of the mudstone; (2) non-reactive chemical transport was assumed; and (3) saturated hydraulic conductivity values used in the model are orders of magnitude greater than unsaturated values.

To confirm this travel time, similar calculations were conducted using the results of the 1995 confirmation drilling program. A hydraulic gradient of 0.0135 was calculated between drill holes PB-36 and PB-38. The same modeling parameters and equations were applied to this gradient. It was estimated that the time required for contaminants to migrate 2500 feet from the eastern boundary of the proposed landfill to the uppermost aquifer will be 7,042 years.

3.6.3.2 Unsaturated Flow Modeling

Unsaturated flow modeling was performed to simulate potential leakage or infiltration from the proposed hazardous waste landfill. Site characterization data indicate unsaturated conditions in the strata surrounding the proposed landfill. The unsaturated flow model developed by Mckee and Bumb (1988) predicts the extent of wetting fronts emanating from leakage sources on the base and side slopes of the landfill. Leakage rates were based on preliminary HELP (Hydrologic Evaluation of Landfill Performance) modeling results presented in Tables 3-3 and 3-4. The modeling results help illustrate how the natural hydrological conditions at the site inhibit subsurface fluid flow. [Note: These HELP modeling results should not be confused with those presented in the engineering report in Volumes III and VI, which support the current landfill design.] Three separate simulations were performed to account for the heterogeneities at the site. The first simulation predicts the soil moisture distribution in the Lower Dockum from leakage sources at the base of the landfill. The second simulation predicts the lateral movement of the wetting front into the Upper Dockum from leakage sources on the side slopes of the landfill. The third simulation predicts fluid movement through the clay berm and adjacent Quaternary alluvium along the perimeter of the landfill. The predicted wetting fronts led to the estimation of unsaturated hydraulic conductivities, darcy flux rates, interstitial water velocities and approximate contaminant travel times to the nearest aquifers. The primary modeling objectives include the following:

- prediction of the effective saturation distribution (wetting front) emanating from the landfill source;
- determination of the unsaturated hydraulic conductivity and advective transport rates; and,
- breakthrough time of the wetting front at the edge of the clay berm.

Modeling Methodology

Unsaturated flow modeling was performed using the exact steady state solution developed by Mckee and Bumb (1988) and Bump and Mckee et al. (1988). The steady state solution derived from the Richards equation (1931) of unsaturated flow provides more conservative results in lieu of transient based solutions. The Mckee and Bumb (1988) and Bumb and Mckee et al. (1988) steady state solution for a continuous point source in an infinite isotropic medium is governed by the following equation:

$$\Delta\eta_{\infty} = \frac{Q^{\exp\left[\frac{\alpha}{2}\left(z-z'-\sqrt{r^2+(z-z')^2}\right)\right]}}{4\pi\sqrt{r^2+(z-z')^2}}$$

where

$$r = \sqrt{(x-x')-(y-y')^2}$$

$$\Delta\eta = \text{hydraulic potential}$$

$$S = S_r + (S_m - S_r)(\alpha\eta / K_o)^{1/n}$$

or

$$S_e = (a\eta / K_o)^{1/n}$$

At the Facility site, the evapotranspiration rate is high with respect to precipitation (Stoller, 1994). According to Mckee and Bumb (1988), the soils in semi-arid regions of the western United States are at or below residual saturation (Sr). Therefore, the observed initial moisture contents are probably at or near the residual moisture content. Generally fluid flow is inhibited at soil moisture contents at or below the residual moisture content. The amount of saturation above the residual moisture content is referred to as the effective saturation. Unsaturated hydraulic conductivity is a function of the effective saturation and is expressed in the following equation (Mckee and Bumb, 1988; Bumb and Mckee et al., 1988):

$$K(\theta) = K_0 S_e^n$$

Brooks and Corey (1964) correlated the n exponent with the pore size distribution index α. Mckee and Bumb (1988) by confirmation of theoretical derivations by Irmay (1954) suggest an optimal value of 3 for η.

Under steady state conditions flow is driven by the force of gravity as the matric potential approaches unity (Hillel, 1980). Therefore, under steady state conditions the unsaturated hydraulic conductivity ($K(\theta)$) is equal to the darcy flux ($q(\theta)$), which in turn is multiplied by the unit area to obtain a leakage or discharge rate (Q). The following equations express these relationships:

$$q(\theta) = K(\theta);$$

$$Q = \frac{q(\theta)}{\mathrm{A}}$$

The average interstitial water velocity (v) was used to estimate advective transport rates of non-reactive conservative solutes. Approximate travel times to the nearest aquifers can be estimated from the interstitial water velocity using the following expression:

$$v = q / \theta$$

In summary, modeling assumptions include steady state unsaturated flow in an infinite domain, a continuous leakage source, flow through porous medium, complete saturation of the soil beneath the source, and initial uniform saturation of the medium. The modeling does not account for secondary permeability features such as faults, fractures and macropores.

Input Parameters

Input parameters and initial boundary conditions were based on observed field conditions, landfill design specification, and preliminary HELP modeling results [Note: These preliminary HELP modeling results were based on a landfill liner design which did not incorporate a double liner system on the side slope areas. These results should not be confused with the HELP modeling results presented in the engineering report in Volume III and VI. The results presented in the engineering report support the currently proposed landfill design which incorporates a double liner in all areas and does not indicate any leakage from the landfill.] Average hydraulic parameters for the Lower and Upper Dockum and landfill design specifications are presented in this section. Input parameters used for the unsaturated flow modeling are presented in Table 3-5.

The source term geometry was based on the east-west geologic cross-section (Figure 3-13)(Stoller, 1994). Modeled source coordinates correspond to the basal and eastern slope dimensions of the proposed landfill. Conservative average leakage rates from the preliminary HELP modeling were used as source terms along the base (8.58 gpad) and eastern side slope (40.86 gpad) of the landfill to provide conservative "worst case" estimate of unsaturated flow. The leakage rate for the floor of the landfill was based on HELP modeling simulations between 70 and 200 years. The initial leakage rates for the first 50 years of HELP modeling were excluded from the average because these rates were extremely low and probably not representative of steady state conditions. These simulated leakage rates are based on extreme conditions such as waste moisture content conditions which exceed the field capacity of the waste and a termination of leachate pumping following the 30-year post-closure period.

Average site-specific saturated hydraulic conductivity values for the Upper Dockum siltstone (1.22×10^{-5} cm/s) and Lower Dockum (5.68×10^{-8} cm/s) were used as initial conditions for the first two modeling simulations. The design specifications of the clay berm require material with a permeability on the order of 10^{-7} cm/s. The saturated hydraulic conductivity of the Quaternary alluvium was assumed to be three orders of magnitude less than that of the clay berm. The effective saturation values for the Upper and Lower Dockum simulations were based on site-specific average initial moisture contents (Stoller, 1994). The bubbling pressures for the Upper and Lower Dockum, clay berm, and Quaternary alluvium simulations were based on average values of similar types of geologic materials reported by Bumb and Mckee et al. (1988).

Initial boundary conditions are presented in Figure 3-19, which shows a schematic of the proposed landfill and surrounding hydrostratigraphy. As displayed in Figure 3-19, the Lower Dockum Aquifer is approximately 600 feet (200 meters) below the site. The perched aquifer in the Upper Dockum is located approximately 2,500 feet (755 meters) to the east. The clay berm surrounding the proposed landfill is approximately 20 feet (6 meters) thick and rests on top of the Upper Dockum. The initial soil moisture contents of the surrounding clay berm and strata are assumed to be uniform and at residual saturation.

Modeling Results

The steady state unsaturated flow modeling results are presented in Figures 3-20 through 3-24. The Upper Dockum and clay berm results are presented as a function of lateral distance from the landfill source. The Lower Dockum results are presented as a function of depth from the source. The results of the modeling simulations are in reference to the landfill source.

Figure 3-20 displays the effective saturation at various distances from the source. As the wetting front disperses from the landfill source the chart shows abrupt decreases in saturation. The clay berm/Quaternary alluvium and Upper Dockum simulations show the sharpest decrease in saturation with Se values decreasing by nearly an order of magnitude at less than 100 meters from the source. Although the effective saturation dissipates less rapidly in the Lower Dockum, moisture contents decrease by nearly on order of magnitude at approximately 200 meters from the landfill source. The modeling results indicate that the Lower Dockum maintains greater saturation than the Upper Dockum, clay berm and Quaternary alluvium because fluid movement is driven primarily by gravitational forces; therefore fluid migration is greatest in the vertical direction.

Figures 3-21 and 3-22 display the unsaturated hydraulic conductivity and interstitial water velocity results, respectively. Comparison of these data to the effective saturation distributions (Figure 3-20) show the high degree of correlation between unsaturated flow and soil moisture content. Figures 3-21 and 3-22 show abrupt decreases in unsaturated hydraulic conductivity and interstitial water velocity, respectively, at relatively short distances from the source. Although Figure 3-22 shows that the interstitial water velocities decrease exponentially over distance, gross travel times may be estimated. The simulated interstitial water velocities were used to compute the following contaminant travel times of non-reactive solutes:

- contaminant travel time from the base of the landfill to the Lower Dockum Aquifer, located approximately 200 meters (600 feet) below the site, is estimated at 4,084,674 years;

- contaminant travel time from the eastern slope of the landfill to the perched groundwater in the Upper Dockum at a lateral distance of 755 meters (2,500 feet) was estimated at 3.4 billion years;

- breakthrough time of the wetting front at the edge of the clay berm (a travel distance of 6 meters or (20 feet) was estimated at 866 years; and,

- contaminant travel time through the clay berm and Quaternary alluvium to a point above the perched groundwater (a distance of 755 meters) was estimated at 574,507,913 years.

Figures 3-23 and 3-24 display the steady state leakage per unit area as a function of distance from the source. Figure 3-24 also shows that the leakage rate at the edge of the clay berm (6 meters from the source) is approximately 10 gpad but quickly dissipates in the Quaternary alluvium. Despite the high leakage rate (10-11 gpad), calculations indicate that it would take a wetting front approximately 866 years to reach the outer edge of the berm.

Explanation of equation parameters:

A = area [L^2]
k = hydraulic conductivity [L/T]
K_o = hydraulic conductivity at maximum saturation [L/T]
n = power in the power-law relationship for K as a function of soil saturation
Q = flow rate or strength of point source [L^3/T]
R = distance from point source [L]

S = saturation of the soil
S_e = effective saturation
S_m = maximum saturation
S_r = irreducible or residual saturation
v = velocity of particles
x,y,z = Cartesian coordinates, z defined positive downward [L]
x',y',z' = location of point source [L]
α = constant defined by n/β [1/L]
β = bubbling pressure [L]
θ = volumetric moisture content
$\varnothing$ = porosity
$\Delta\eta$ = hydraulic potential

3.7 GROUNDWATER PROTECTION REQUIREMENTS

The following sections present general monitoring requirements and detection monitoring requirements, respectively.

3.7.1 General Monitoring Requirements

The selection of a monitoring program to identify contaminant releases from the proposed Facility was based on results of the geologic characterization and RCRA guidance. For the purposes of designing a monitoring program for the site, the Upper Dockum Unit was considered the uppermost aquifer (Section 3.6.2.2). This unit is not saturated within the Facility boundaries.

Two major geologic factors influence the design of a program to monitor potential contaminant releases from the site. These factors are the intermittent nature of saturation in the Upper Dockum downgradient of the Facility and the presence of a low permeability layer (the Lower Dockum) that significantly limits the potential for vertical migration of contaminants. These two factors influence potential groundwater transport pathways for contaminants released from the Facility and, therefore, affect the placement of monitoring devises.

There is no regional aquifer developed within the Upper Dockum; however, adjacent to the project boundary, permeable zones have been observed to be saturated. Exploratory drilling upgradient and downgradient of the site has identified isolated pockets of groundwater in permeable facies of the Upper Dockum (Section 3.6.2.2). Downgradient of the site, perched groundwater was detected above the Upper Dockum/Lower Dockum contact, approximately 2,500 feet east of the proposed landfill. Upgradient of the site, an isolated pocket of groundwater was detected at Borehole 14. The low permeability of the underlying Lower Dockum will prevent significant vertical migration of groundwater and will direct flow downdip along the Upper Dockum/Lower Dockum contact in the direction of perched groundwater east of the site. Therefore, potential contaminant releases from the proposed Facility will preferentially migrate downdip along the Upper Dockum/Lower Dockum contact.

Given the geologic and hydrologic features controlling the movement of groundwater at the site, monitoring the Upper Dockum is the most effective manner in which to immediately detect potential releases from the Facility. However, the placement of monitoring wells in the Upper Dockum is limited due to the fact that this unit is unsaturated within the site boundary. The utility of placing groundwater monitoring wells 2,500 downgradient of the landfill is questionable. The most effective monitoring program will involve vadose zone monitoring. A request to utilize the vadose zone system for groundwater monitoring is being submitted under separate cover.

3.7.2 Vadose Zone Monitoring Requirements

The proposed design for the Facility includes a vadose zone monitoring system in the sump of each cell. The intent of the sump vadose monitoring system is to provide an immediate indication if there is any leakage from the double composite liner system. Leakage from the secondary liner will be intercepted by the vadose zone monitoring system, which will be checked daily for the presence of liquids.

The design of the vadose zone monitoring system is shown in the design Drawings 15 through 19 in Volume III. It includes a 60 mil HDPE liner system below the bottom of the secondary liner system in the area of the sump. The vadose zone liner system is limited to an area directly beneath the sump, as this is the area expected to have the most liquids ponded for the longest period of time. Above the HDPE liner in the vadose zone sump, a drainage gravel surrounds a side slope riser pipe that extends into the sump. The side slope riser pipe allows a pump to be installed in the sump to remove accumulated liquids.

The vadose zone monitoring system, shown in the design drawings (Volume III) and described above, is expected to be a much more immediate indicator of leakage from the landfill than any other type of groundwater monitoring system or even a vadose zone monitoring system installed around the perimeter of the landfill. Given the geologic and hydraulic conditions at the base of the landfill (unsaturated Upper Dockum siltstones and claystones), any fluids leaking from the landfill will migrate vertically with limited lateral dispersion and will be very difficult to intercept and detect. Since each cell is graded so that leachate will collect in the sump, liquids will be present in this area for the longest period of time, resulting in the sump area having the highest hydraulic head on the liner system. A vadose liner below the sump areas will indicate quickly if liquids are escaping from the liner system. The vadose zone sump will not only provide an indication that the LDRS sump is leaking, but will also provide access to remove the leakage and minimize head buildup in the sumps and in liners above until the source of the leakage is found. The vadose sumps for the landfill and evaporation ponds will be monitored for the presence of liquids whenever the primary or secondary sumps are monitored. As described in Section 5.2.2, these systems will be checked daily during active operations and closure.

It is expected that liquids in the vadose sump could occur from two sources. The first is consolidation of the overlying clay liner draining into the sump. This water is expected to be uncontaminated. The second source is leakage from the landfill. This liquid is expected to be similar to the leachate that is collected from the primary sumps. After the start of operations of the landfill, the leachate that is collected and removed from the primary sump will be analyzed to determine its constituents. Based on this analysis a select series of parameters will be identified that can be used to identify leachate from consolidation water. Thereafter, whenever liquids are detected in the vadose sump, they will be removed and sampled. Samples will be analyzed for leachate characteristics. If any of the leachate parameters are identified, the samples will be tested for the complete EPA Appendix IX parameters. If leachate is confirmed to be present in the vadose zone sump, then corrective action measures will be implemented.

3.8 SUMMARY AND CONCLUSIONS

The proposed location of the Facility landfill in eastern Chaves County, New Mexico is ideal. It is located in an unpopulated portion of the county, on privately owned land, and more than 36 miles from the nearest community. The semiarid climate of this region with its high evaporation rate and lack of surface water, will play an important role in the proposed site's ability to confine and control material placed in the landfill.

Large-scale ranching is the primary land use for this portion of Chaves County. However, setting aside the 480 acres proposed for the Facility will have no impact on the ranching industry in the

region, as these acres support fewer than five animal units year-long. Since the economic stimulation provided by landfill-related jobs will greatly offset the minimal economic impact of the loss of grazing land, the project has the support of the surrounding community.

A geologic setting for the Facility was selected that will enable the proposed landfill to be developed in an environment that will protect groundwater resources and ensure long-term isolation of wastes. The host rocks for this Facility are the sediments of the Dockum Group of Triassic age. Because these sediments are unsaturated and of low permeability, they represent a stable geologic barrier to the potential migration of contaminants from the proposed landfill.

The proposed landfill will be developed within sediments of the Upper Dockum unit. These sediments, consisting of fluvial, interbedded mudstones (30 percent) and siltstones (70 percent), are unsaturated beneath the proposed site. The nearest groundwater production comes from the Tertiary Ogallala Aquifer. The western boundary of this aquifer forms a topographic feature called the Caprock, which is approximately two miles east and several hundred feet higher than the proposed site.

While the Upper Dockum unit is unsaturated beneath the site, it is partially saturated 2,500 feet east of the proposed landfill (downdip). The source of this groundwater is infiltration from the overlying Ogallala Aquifer. Due to this perched groundwater, the Upper Dockum unit is designated as the uppermost aquifer for the purposes of this permit application.

The hydrologic setting of the Facility is extremely protective of groundwater resources. To demonstrate the integrity of the natural barriers present at this site, conservative contaminant transport modeling was performed, in which the most conservative parameters were consistently input into the modeling process. Acceptable conclusions were obtained even though "worst case" assumptions were used. The site's actual values will obviously provide an even larger margin of safety than the conclusions indicate.

For example, conservative transport modeling calculated that it will take 7000 - 8000 years for potential contaminates to migrate laterally through the sediments on the flanks of the proposed landfill to the nearest perched groundwater-bearing intervals within the uppermost aquifer. To emphasize the conservative nature of these calculations, saturated conditions were assumed for this modeling even though the Upper Dockum sediments at the proposed site are unsaturated. The migration pathway was assumed to be entirely through highly permeable siltstones, although close-spaced drilling indicated that 30 percent of this pathway would be comprised of low permeability mudstones. A non-reactive contaminant was also assumed, even though in reality a contaminant would react with the sediments through which it was traveling, adding considerably to the overall travel time.

To illustrate the conservative nature of this 7000 - 8000 year travel time, a second, unsaturated flow modeling approach was applied to the lateral contaminant migration scenario. This more realistic calculation resulted in an estimated travel time of 3.4 billion years.

The character of the Lower Dockum sediments is much different from that of the overlying Upper Dockum unit. The Lower Dockum consists of a 600-foot thickness of homogeneous, lacustrine mudstones overlying a thin basal sandstone. This thick sequence of unsaturated, low permeability mudstones represents a geologic barrier to the potential downward migration of contaminants from the proposed landfill. Unsaturated flow modeling estimated that 4 million years would be required for contaminants to migrate downward through these Lower Dockum mudstones and reach a Lower Dockum aquifer.

The description of the proposed Facility, as presented in this permit application is a result of three years of investigation to identify an environmentally sound site in southeastern New Mexico where hazardous wastes could be safely disposed. The location, geology and hydrology of the proposed site

present a unique setting, where natural geologic barriers, combined with a well-conceived landfill design, will ensure long-term isolation of hazardous wastes from the environment.

TABLE 3-1
TEMPERATURES AT ROSWELL, 1977 TO 1978

Month	Monthly Average (°F)	Average Daily Maximum (°F)	Average Daily Minimum (°F)
January	38.1	55.4	20.8
February	42.9	60.9	24.8
March	49.3	57.7	30.9
April	59.7	78.2	41.2
May	68.5	86.4	50.5
June	77.0	94.2	59.8
July	79.2	94.7	63.7
August	77.9	93.4	62.3
September	70.4	86.5	54.3
October	59.6	77.0	42.2
November	46.9	64.8	29.0
December	39.3	56.8	21.8
Annual	**59.1**	**76.3**	**41.8**

TABLE 3-2
MONTHLY AND ANNUAL PRECIPITATION SUMMARY FOR ROSWELL (INCHES)
1977 THROUGH 1982

	Jan	Feb	Mar	Apr	May	Jun	Jul	Aug	Sep	Oct	Nov	Dec	Annual
1977	0.07	0.36	0.27	1.25	2.43	0.25	0.46	4.45	0.29	0.62	0.48	0.02	10.95
1978	0.50	0.48	0.39	0.02	1.81	4.31	0.52	3.49	3.58	1.47	1.25	0.43	18.25
1979	0.41	0.44	0.13	0.32	1.25	1.56	1.44	2.28	0.15	0.18	T	0.37	8.53
1980	0.85	0.19	0.00	1.06	0.85	0.29	0.01	2.45	6.58	T	0.77	0.15	13.20
1981	0.27	0.17	0.10	0.79	3.35	4.55	6.27	4.73	2.70	1.02	0.25	0.13	24.33
1982	0.66	0.20	0.12	0.41	0.20	0.76	1.03	0.93	2.00	0.20	0.92	1.62	9.05

Normal = 10.61
T = trace

TABLE 3-3
TRIASSIC PARK HELP MODEL RESULT SUMMARY FOR CELL FLOOR

Time (years)	LCRS Operational Beyond 30 Years Post Closure			LCRS Not Operational Beyond 30 Years Post Closure		
	Liner Leakage (gal/acre/day)	Cap Leakage (gal/acre/day)	Final Waste Moisture Content (vol/vol)	Liner Leakage (gal/acre/day)	Cap Leakage (gal/acre/day)	Final Waste Moisture Content (vol/vol)
0	1.3781	NA	0.1410	1.3781	NA	0.1410
20	0.9400	0.0454	0.1222	.9400	0.0454	0.1222
30	0.2735	0.0430	0.1181	0.2735	0.0430	0.1181
50	0.1927	0.0450	0.1125	3.4579	0.0450	0.1125
70	0.1329	0.0450	0.1087	8.0071	0.0450	0.1098
90	0.1007	0.0439	0.1059	9.1465	0.0439	0.1083
100	0.0775	0.0442	0.1049	8.5811	0.0442	0.1076
120	0.0744	0.0453	0.1029	8.8612	0.0453	0.1062
140	0.0629	0.0461	0.1013	8.6989	0.0461	0.1048
160	0.0547	0.0442	0.0999	8.5494	0.0442	0.1034
180	0.0482	0.0442	0.0987	8.4178	0.0442	0.1021
200	0.0431	0.0431	0.0976	8.2818	0.0442	0.1008

NA - Not Applicable

TABLE 3-4
TRIASSIC PARK HELP MODEL RESULT SUMMARY FOR CELL SLOPE[1]

Time (years)	LCRS Operational Beyond 30 Years Post Closure			LCRS Not Operational Beyond 30 Years Post Closure		
	Liner Leakage (gal/acre/day)	Cap Leakage (gal/acre/day)	Final Waste Moisture Content (vol/vol)	Liner Leakage (gal/acre/day)	Cap Leakage (gal/acre/day)	Final Waste Moisture Content (vol/vol)
0	173.0000	NA	0.1410	173.0000	NA	0.1414
20	123.0000	0.0453	0.1221	123.0000	0.0453	0.1223
30	53.5373	0.0442	0.1182	53.5373	0.0442	0.1182
50	37.0011	0.0453	0.1152	37.0282	0.0453	0.1152
70	24.5001	0.0461	0.1087	24.5114	0.0452	0.1087
90	18.0529	0.0442	0.1059	18.0583	0.0449	0.1059
100	13.6143	0.0425	0.1049	13.6174	0.0430	0.1049
120	12.9000	0.0443	0.1029	12.9032	0.0450	0.1029
140	10.7627	0.0439	0.1013	10.7642	0.0450	0.1013
160	9.2002	0.0457	0.0999	9.2030	0.0439	0.0999
180	8.0161	0.0462	0.0987	8.0178	0.0457	0.0987
200	7.0994	0.0461	0.0976	7.1002	0.0462	0.0976

Note: [1] Initial HELP Modeling Results were based on landfill liner system without double liner system on side slopes. These should not be confused with HELP results presented in the Engineering Report.
NA - Not Applicable

TABLE 3-5
INPUT PARAMETERS FOR UNSATURATED FLOW MODELING

	β	Ko			Q		α	Source Coordinates (m)		
Unit	**(m)**	**(m/day)**	**Sr**	**Sm**	**(m^3/day)**	**n**	**1/m**	**x[1]**	**y[1]**	**z[1]**
Lower Dockum	0.373	4.90E-05	0.279	1	8.00E-05	3	8.042	0, 33, 66, 99, 132, 165, 193, 231, 264, 297, 330, 363, 396, 429, 462	0	0
Upper Dockum	0.2076	1.05E-02	0.161	1	3.80E-05	3	14.45	5.5, 11, 16.5, 22, 27.5, 33, 38.5, 44, 49.5, 55, 60.5, 66, 71.5, 77	0	24.5, 22.6, 20.72, 18.84, 16.96, 15.07, 13.19, 11.31, 9.42, 7.54, 5.65, 3.77, 1.88, 0
Clay Berm	0.37	8.64E-05	0.126[a]	1	3.80E-05	3	8.108	0, 5.5, 11	0	3.77, 1.88, 0
Quaternary Alluvium	0.0726[a]	8.64E-02	0.0458[a]	1	3.80E-05	3	41.32	0, 5.5, 11	0	3.77, 1.88, 0

Key:

β = bubbling pressure; typical values reported by Bumb and Mckee et al. (1988)
- Ko = saturated hydraulic conductivity; site-specific means values
- Sm = maximum saturation; assumed
- Sr = residual saturation; site-specific mean values
- Q = leakage rate; based on HELP modeling results
- n = curve fitting parameter based on pre size index (Mckee and Bumb, 1988)

α = n/β
- 1 = Typical values reported by Bumb and Mckee et al (1988)
- a = typical values reported by Bumb and Mckee et al. (1988)
- b = assumed values

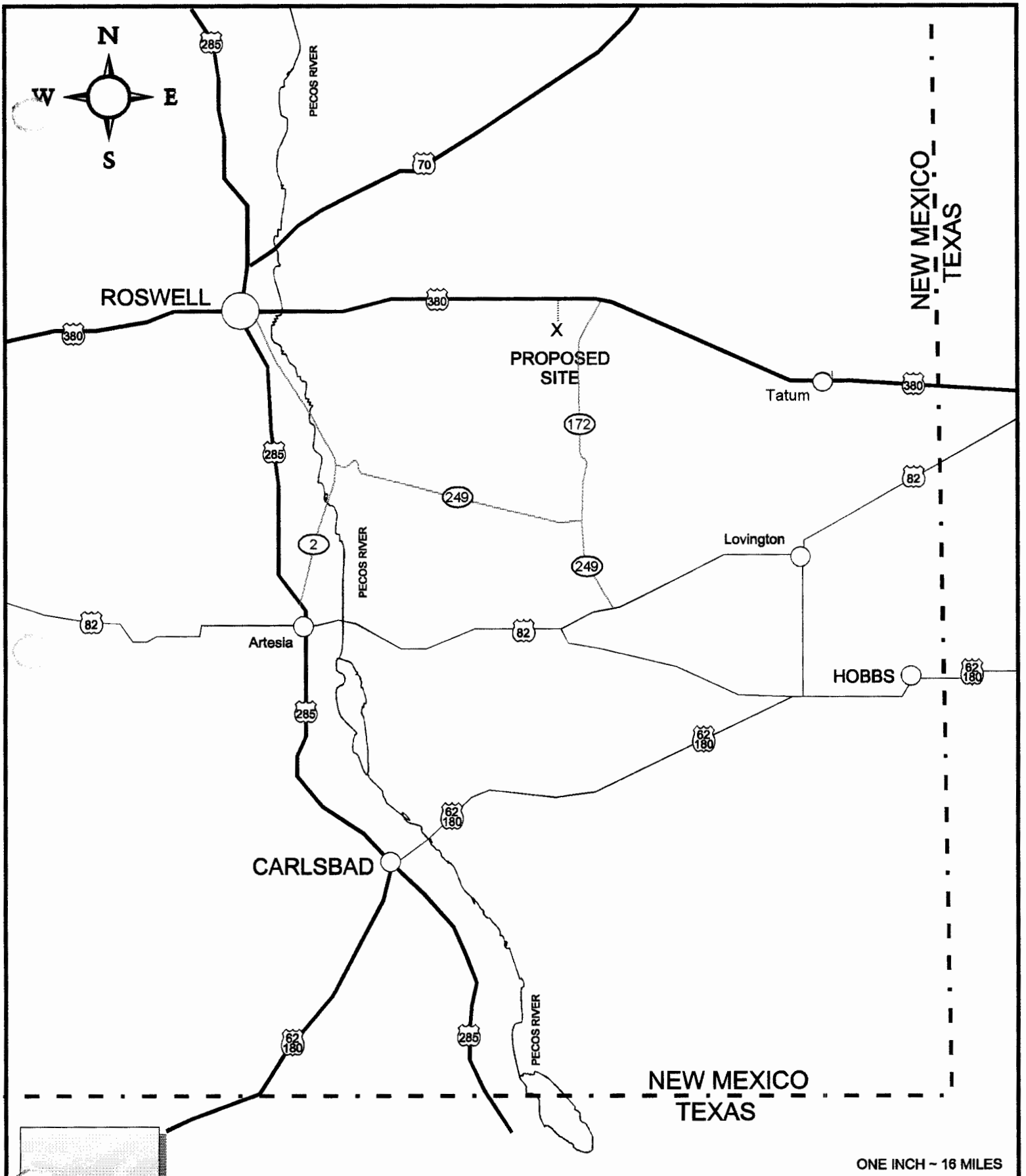

SITE LOCATION MAP

TRIASSIC PARK WASTE DISPOSAL FACILITY

Figure 3-1

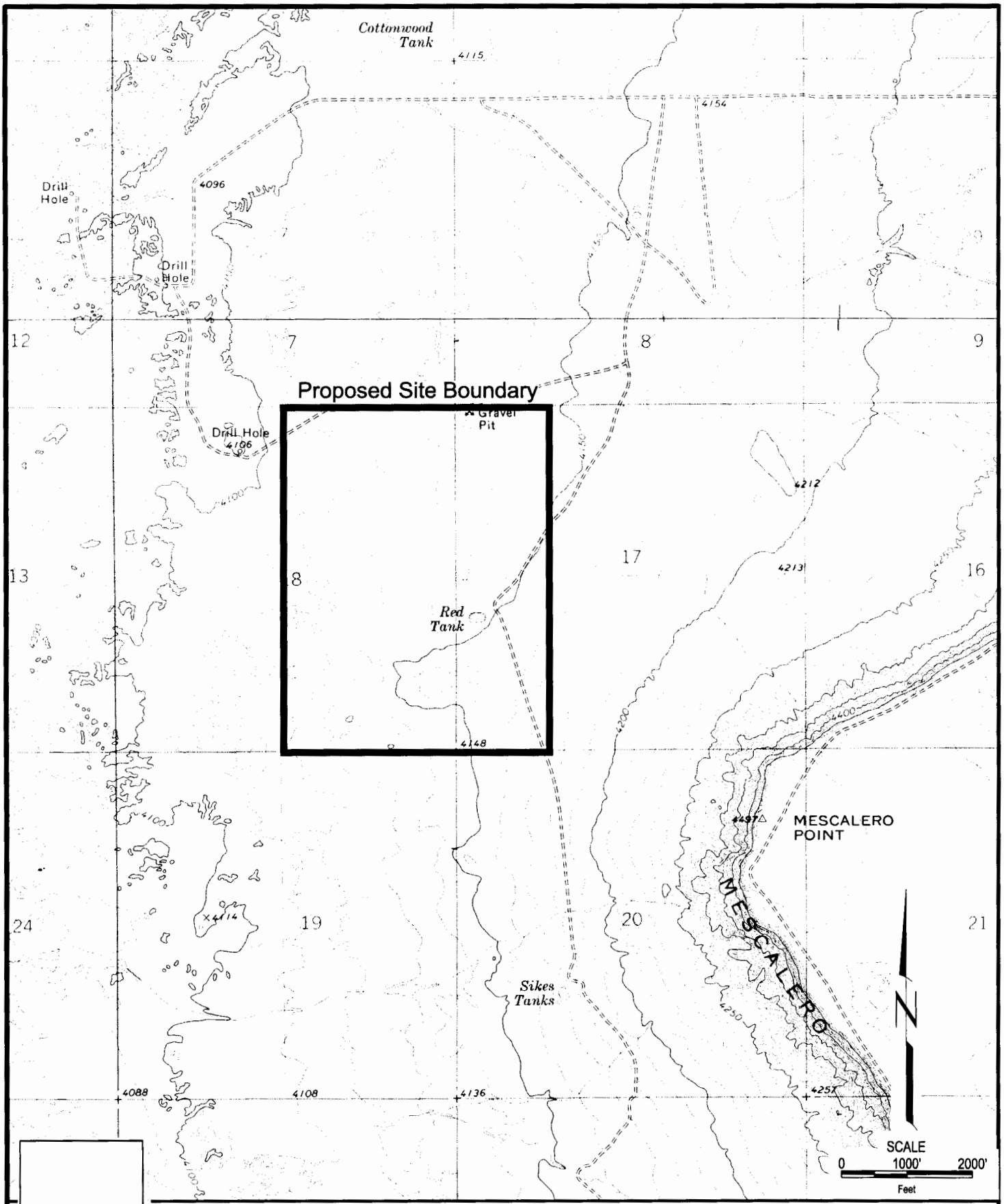

TOPOGRAPHY OF SITE VICINITY

Figure 3-2

TRIASSIC PARK WASTE DISPOSAL FACILITY

AutoCAD FILE: GANDY-FIG3-2

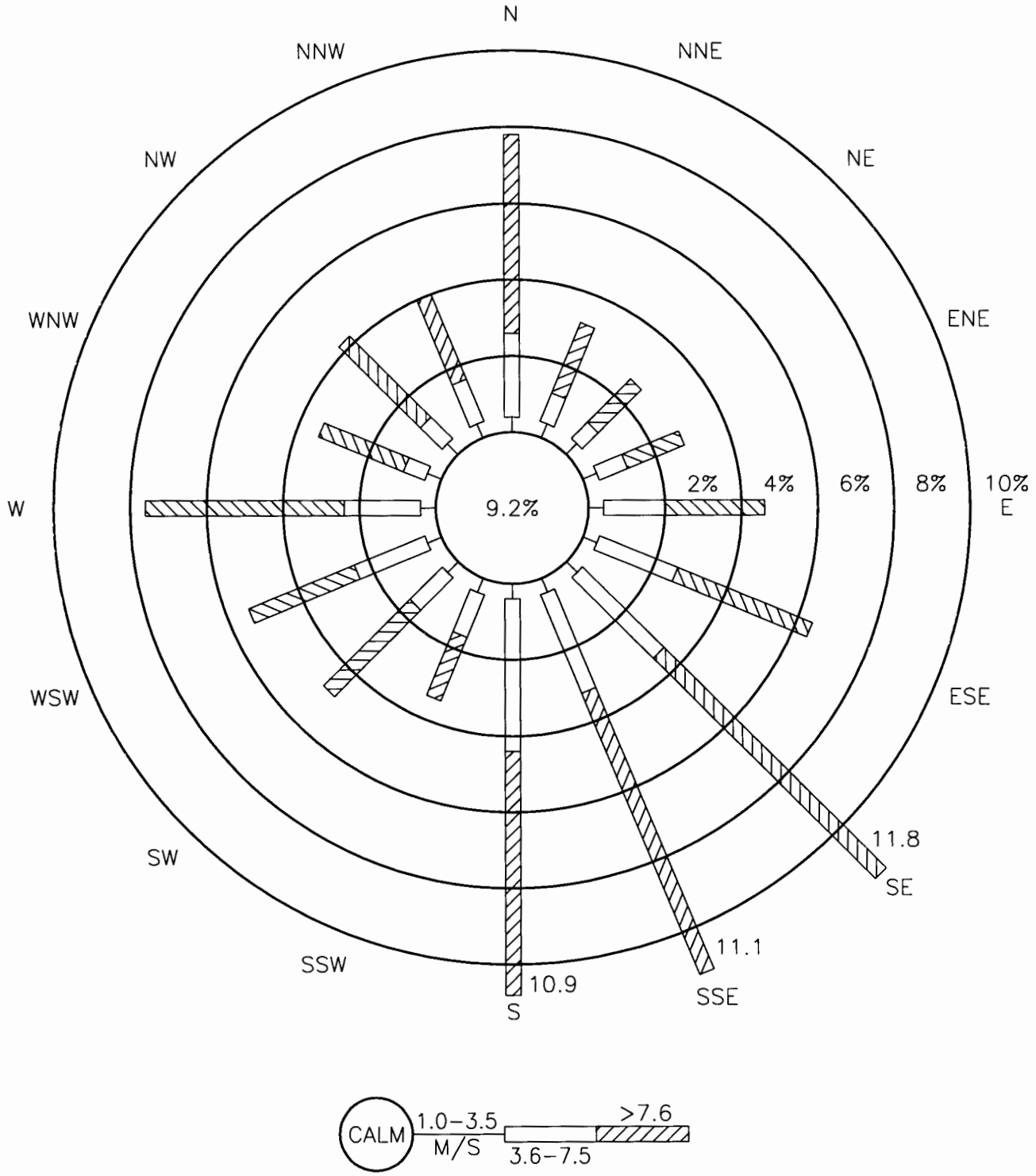

WIND ROSE

Figure 3-3

TRIASSIC PARK WASTE DISPOSAL FACILITY

AutoCAD FILE: GANDY-FIG3-3

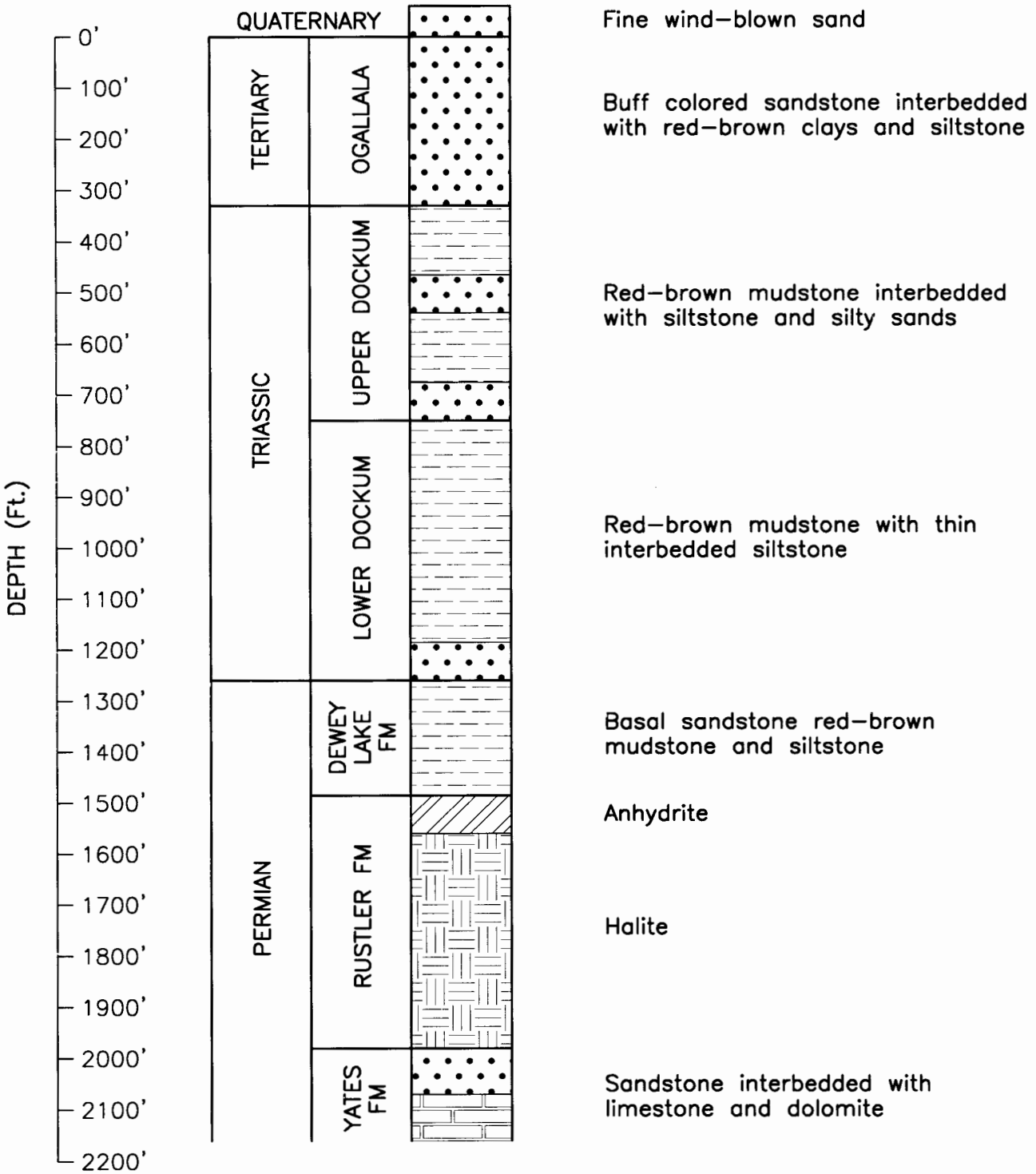

STRATIGRAPHIC COLUMN

Figure 3-4

TRIASSIC PARK WASTE DISPOSAL FACILITY

AutoCAD FILE: GANDY-FIG3-4

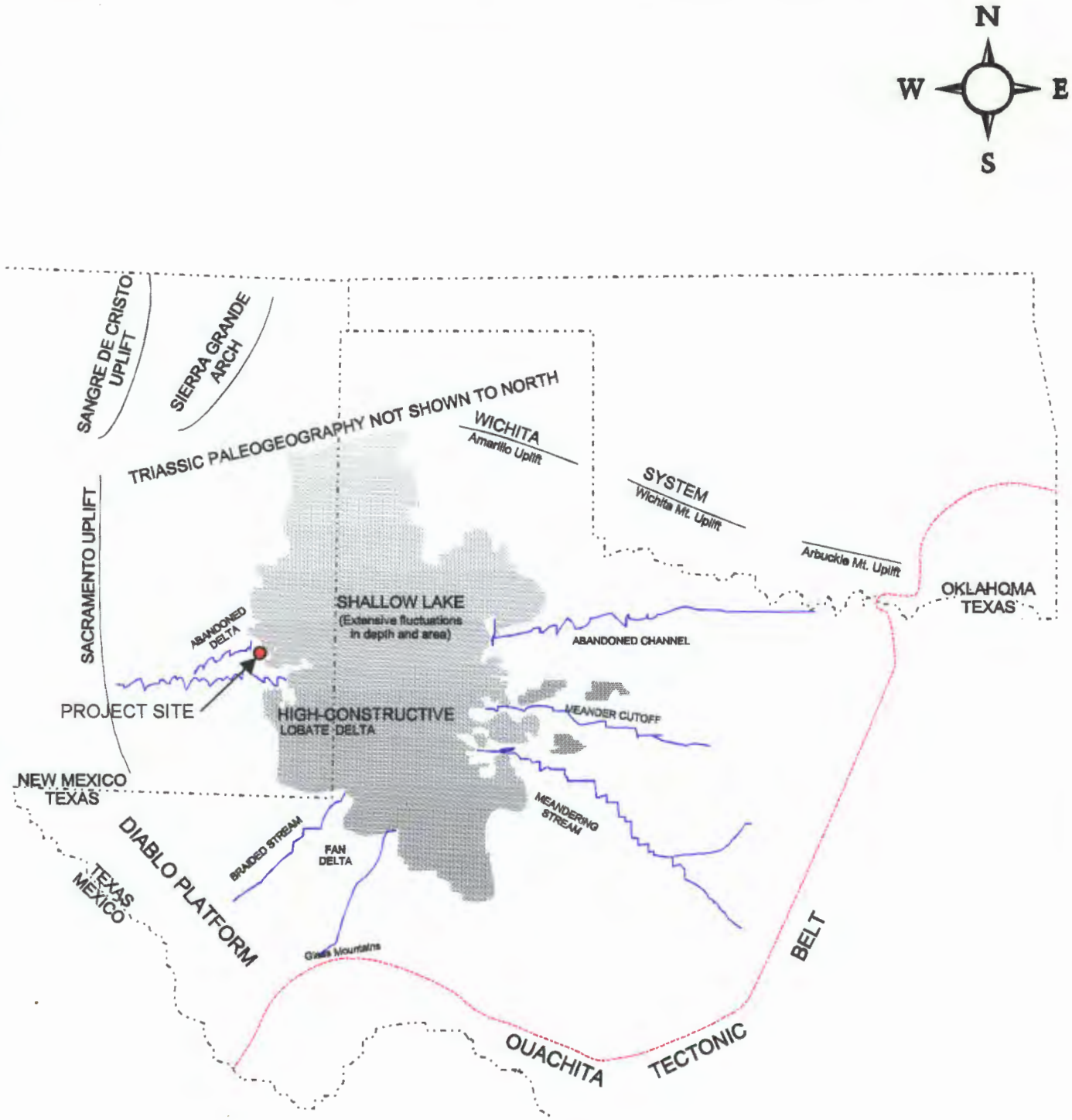

ONE INCH = 100 MILES

BASIN PALEOMAP FOR TRIASSIC PERIOD

TRIASSIC PARK WASTE DISPOSAL FACILITY

Figure 3-5

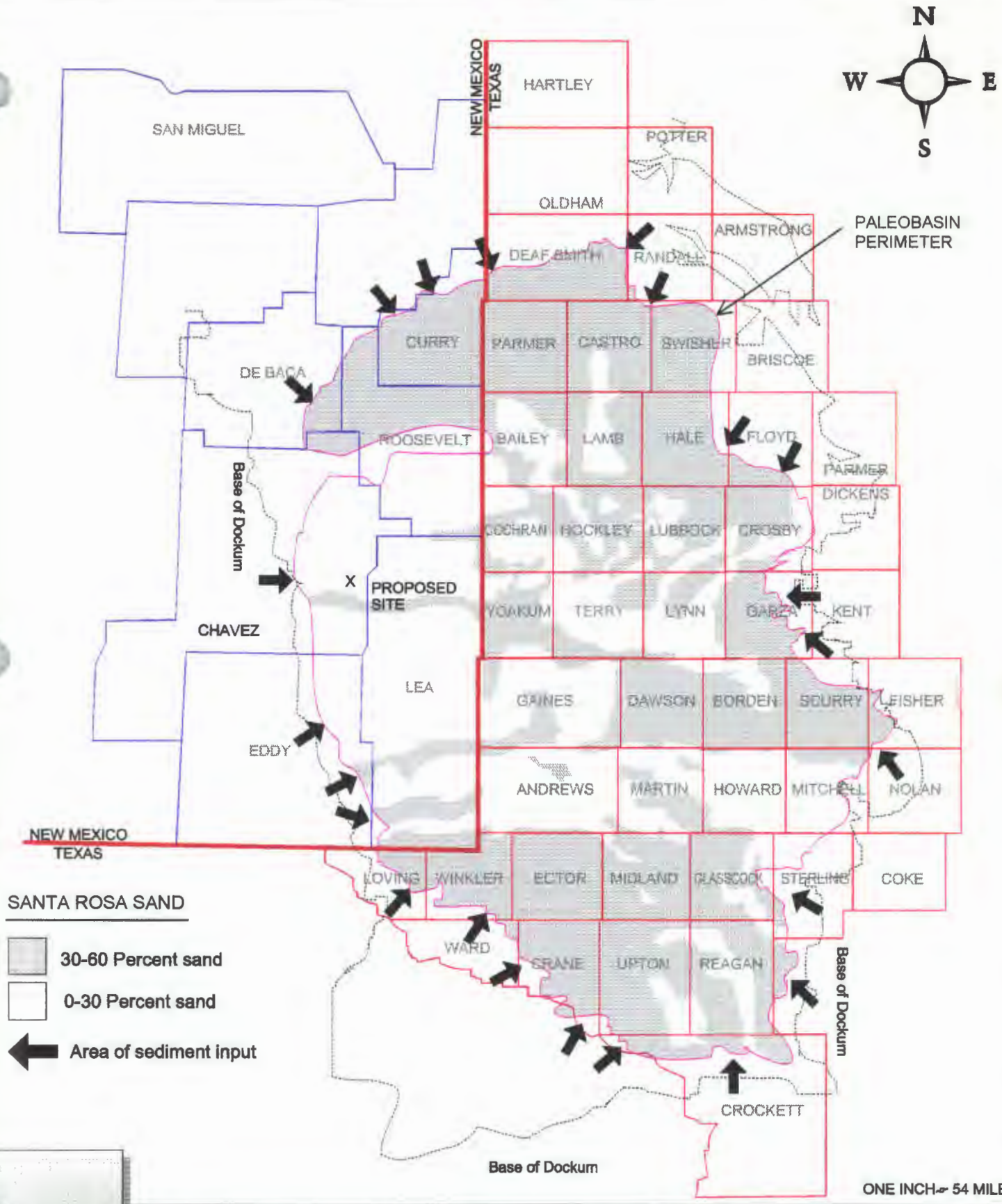

TRIASSIC PERIOD SAND ACCUMULATION IN PALEOBASIN

TRIASSIC PARK WASTE DISPOSAL FACILITY

Figure 3-6

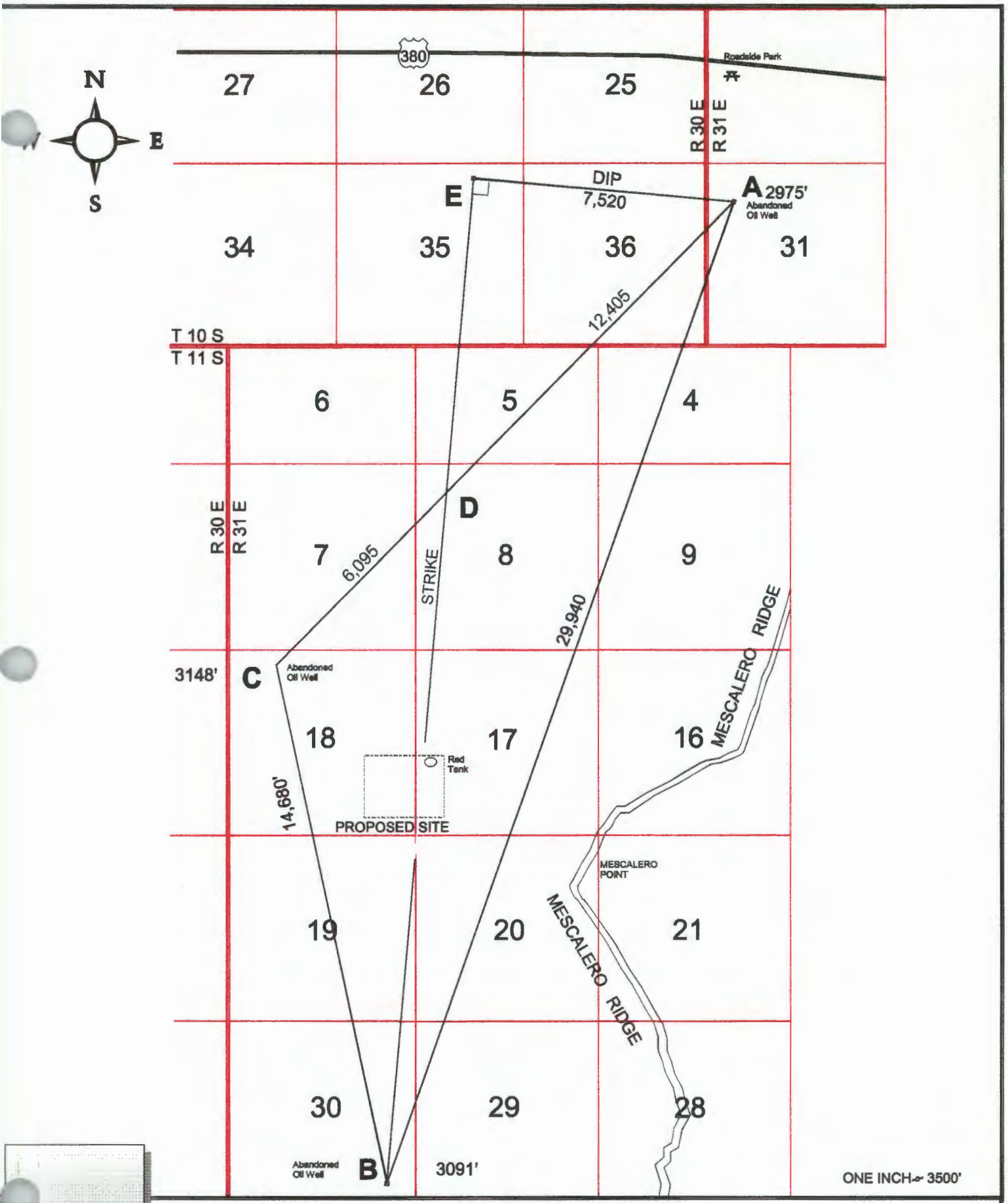

PLAN VIEW, 3-POINT SOLUTION FOR BEDDING STRIKE AND DIP ANGLE

TRIASSIC PARK WASTE DISPOSAL FACILITY

Figure 3-7

SEISMICITY WITHIN 250 KM OF 33.367N 103.850W

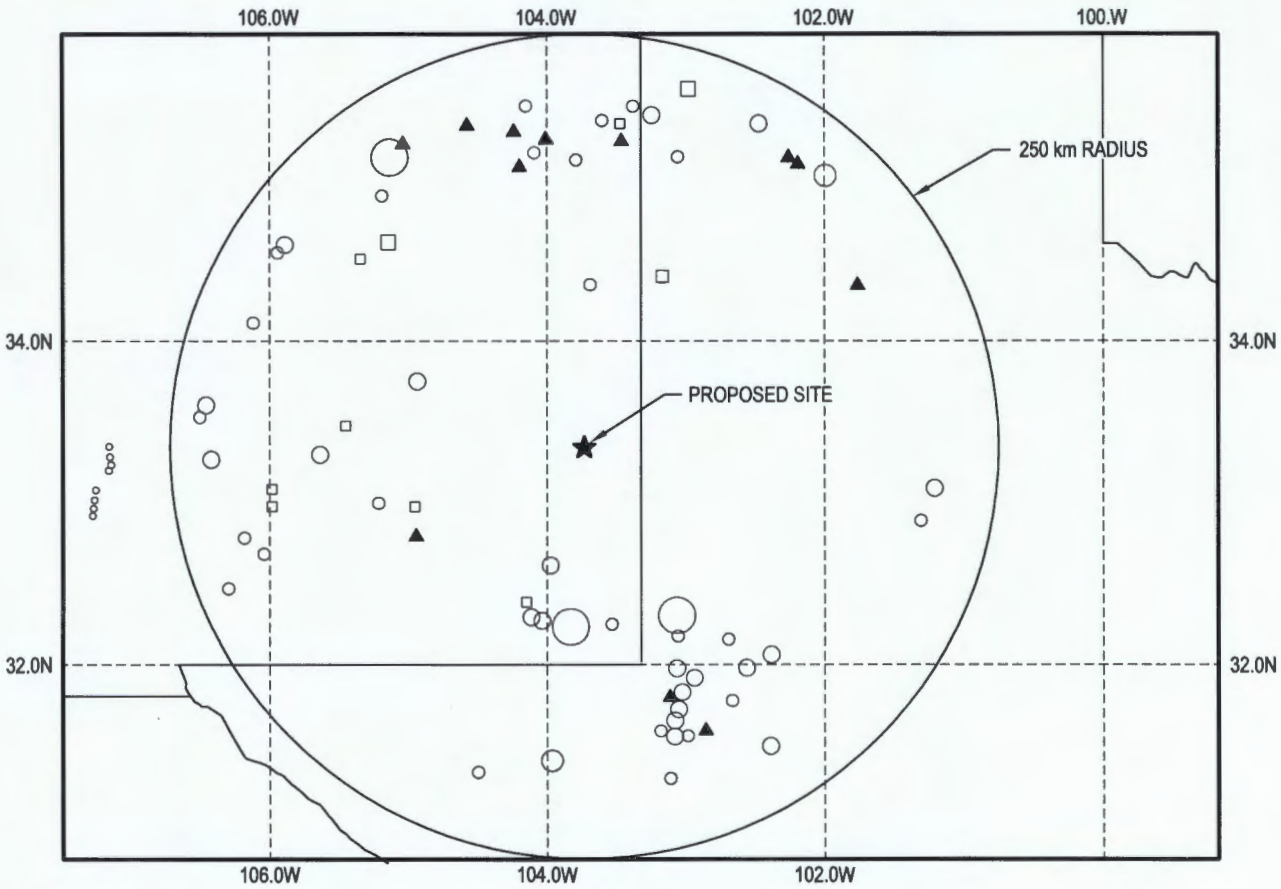

102 EARTHQUAKES PLOTTED

MAGNITUDES

0.1-1.9 =	∘	4.0-4.4 =	○
2.0-2.9 =	○	4.5-4.9 =	○
3.0-3.4 =	○	5.0-5.4 =	○
3.5-3.9 =	○	> 5.4 =	○

NO INTENSITY OR MAGNITUDE ▲

INTENSITIES

I-III	▫	VII	□
IV	▫	VIII	□
V	□	IX	□
VI	□	X-XII	□

National Geophysical Data Center/NOAA Boulder, Colorado 80303

N

SEISMIC ACTIVITY

TRIASSIC PARK WASTE DISPOSAL FACILITY

Figure 3-8

AutoCAD FILE: GANDY-FIG3-8

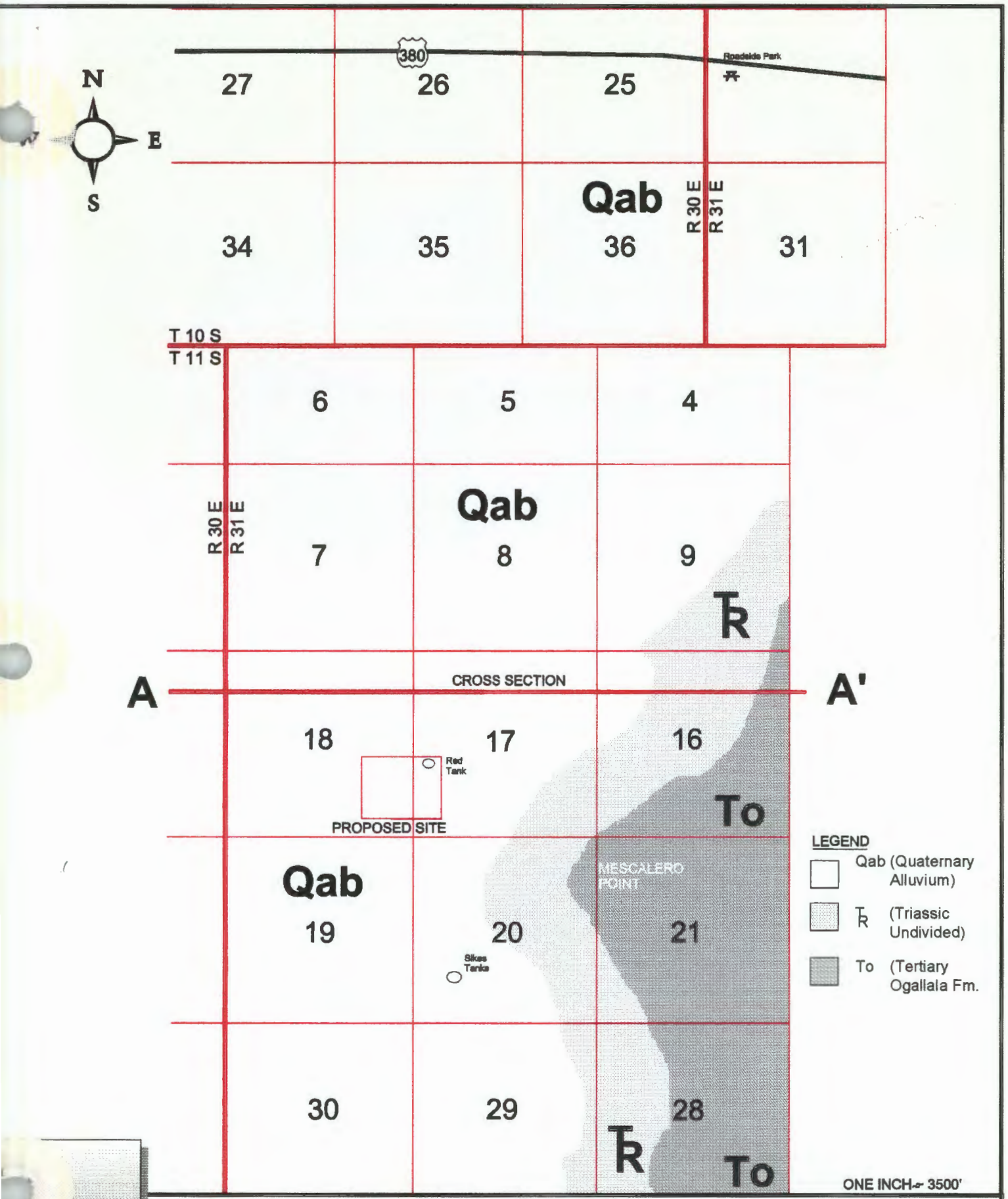

SURFACE GEOLOGY - PROJECT AREA

TRIASSIC PARK WASTE DISPOSAL FACILITY

Figure 3-9

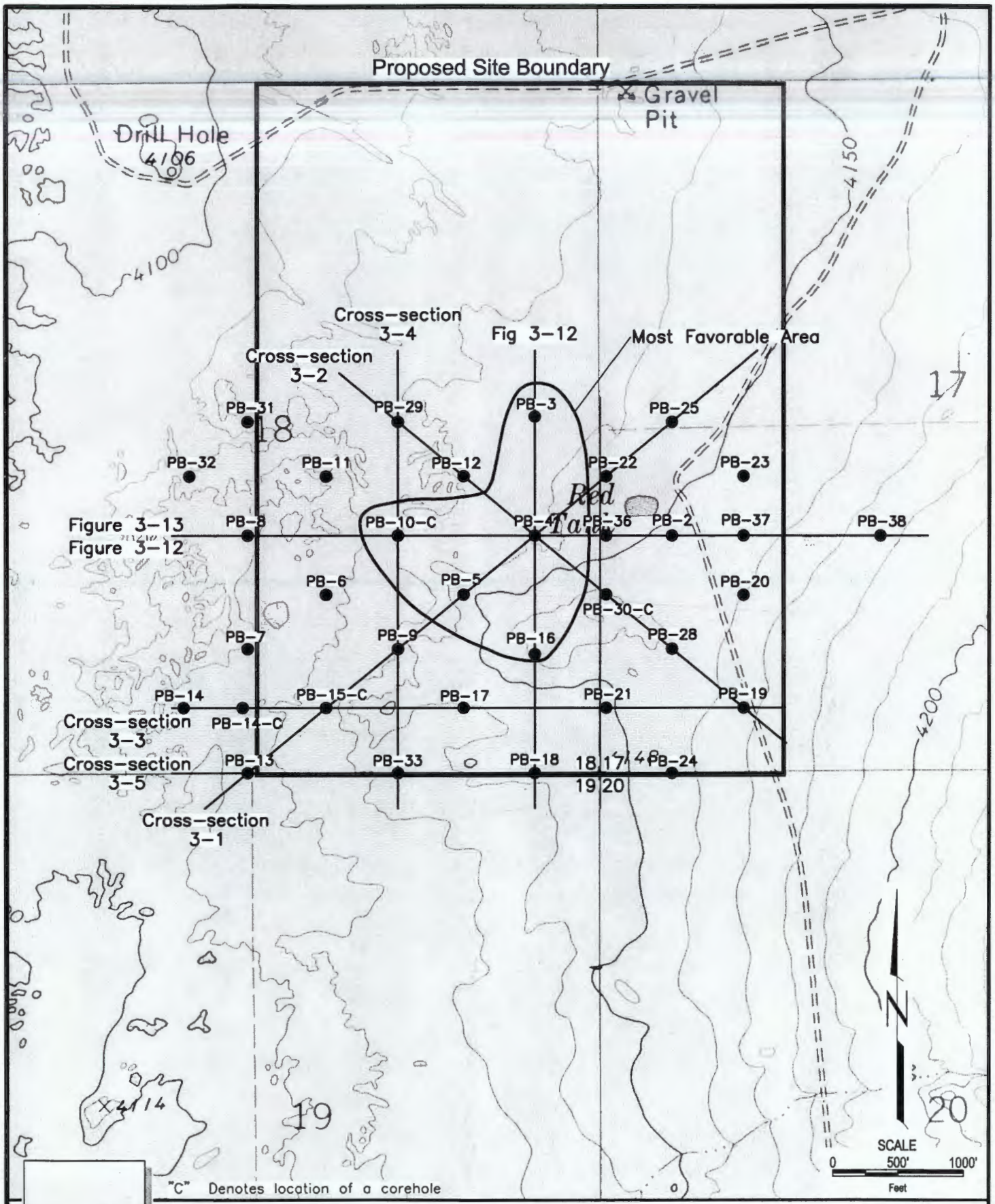

CLOSE SPACED DRILLING PATTERN

TRIASSIC PARK WASTE DISPOSAL FACILITY

Figure 3-11

AutoCAD FILE GANDY-FIG3-14

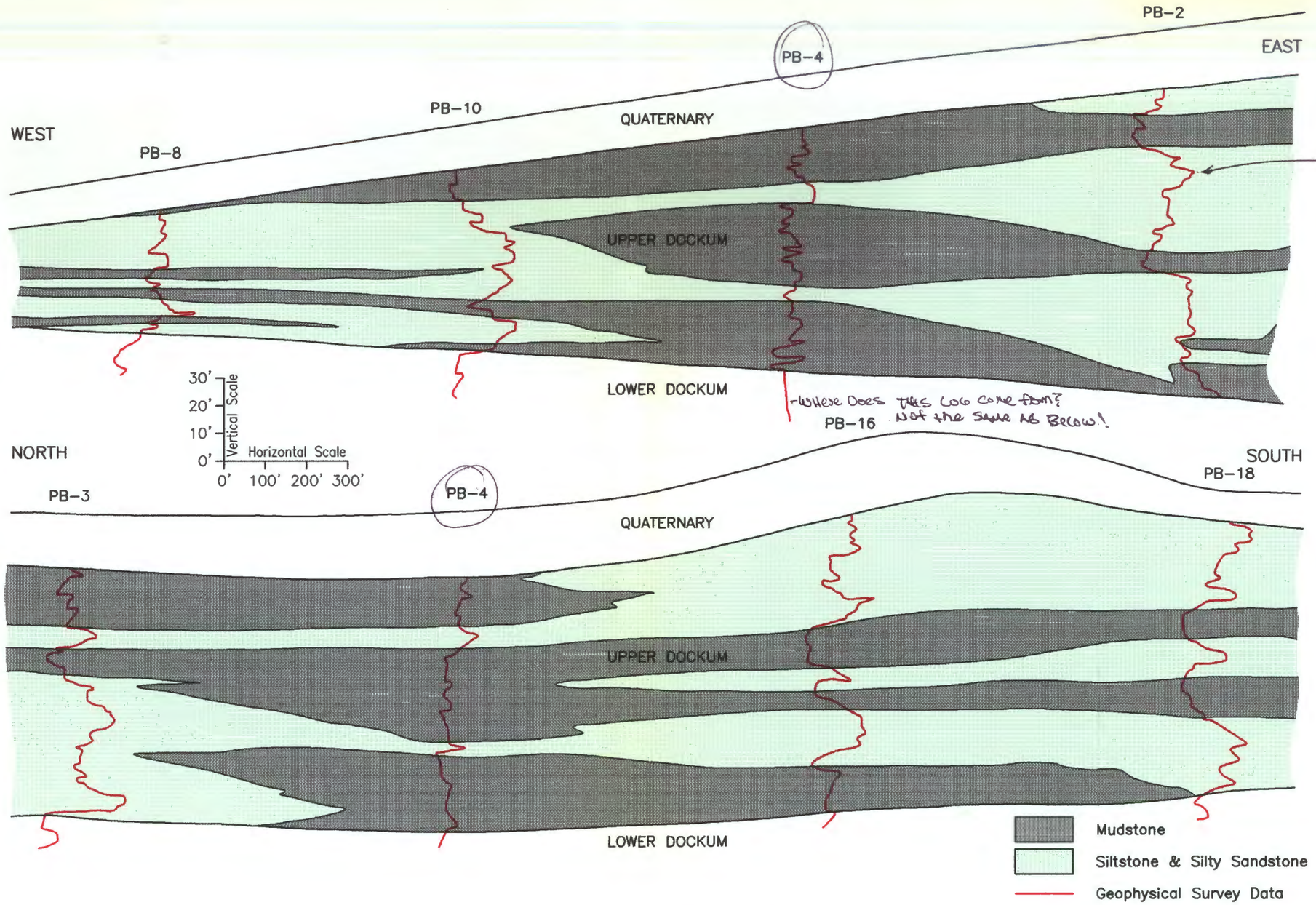

THIS IS THE NORTHW LOG. (from GP Log) not as good indicator of Lithology.

THIS LOG DOES NOT CORRELATE WITH THE LITHOLOGIC LOG.

-Where Does THIS LOG come from? Not the same as Below!

GEOLOGIC CROSS-SECTION

TRIASSIC PARK WASTE DISPOSAL FACILITY

Figure 3-12

AutoCAD FILE: GAIDY-R03-9

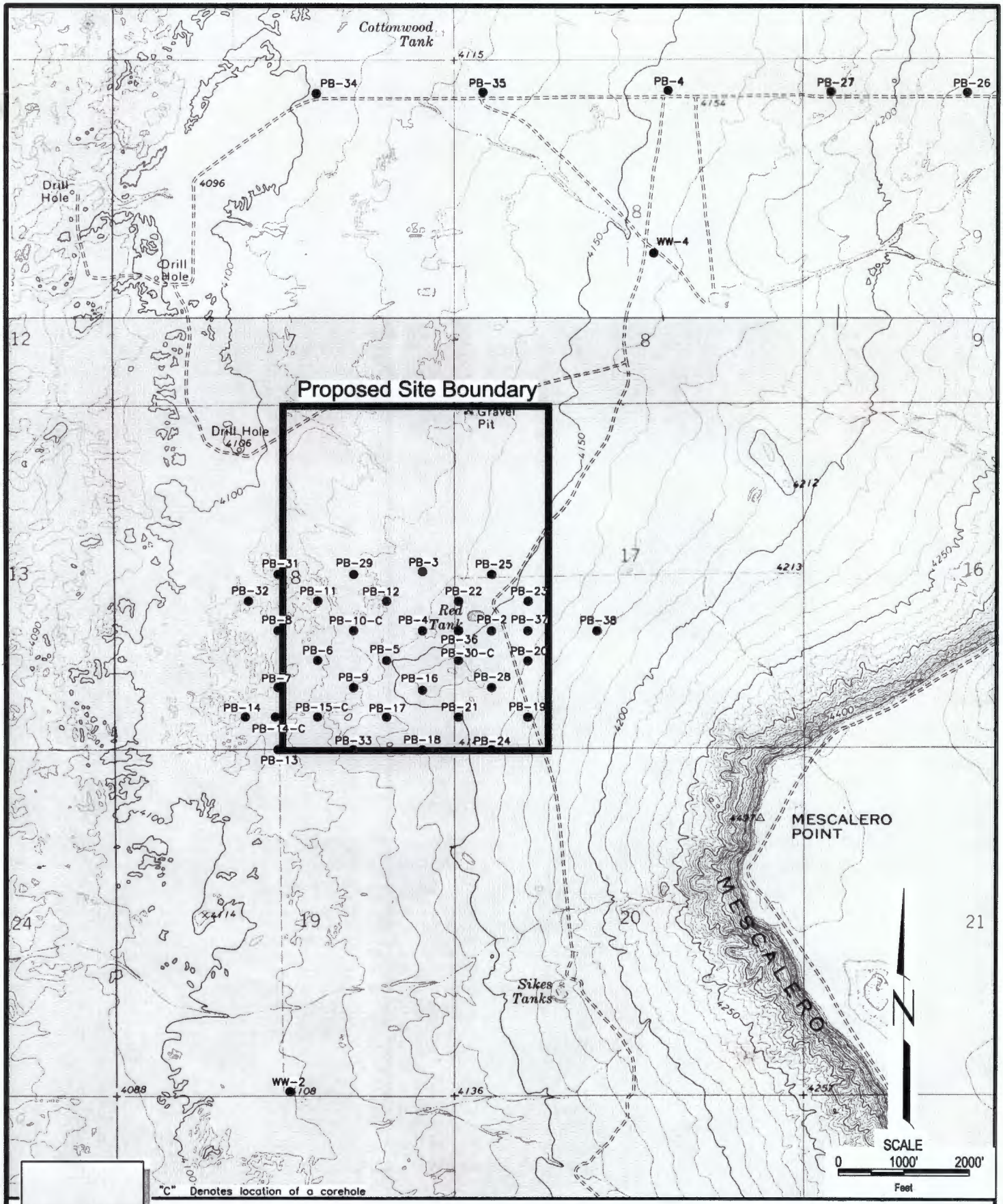

DRILL HOLE LOCATIONS

TRIASSIC PARK WASTE DISPOSAL FACILITY

Figure 3-14

AutoCAD FILE: GANDY-FIG3-14

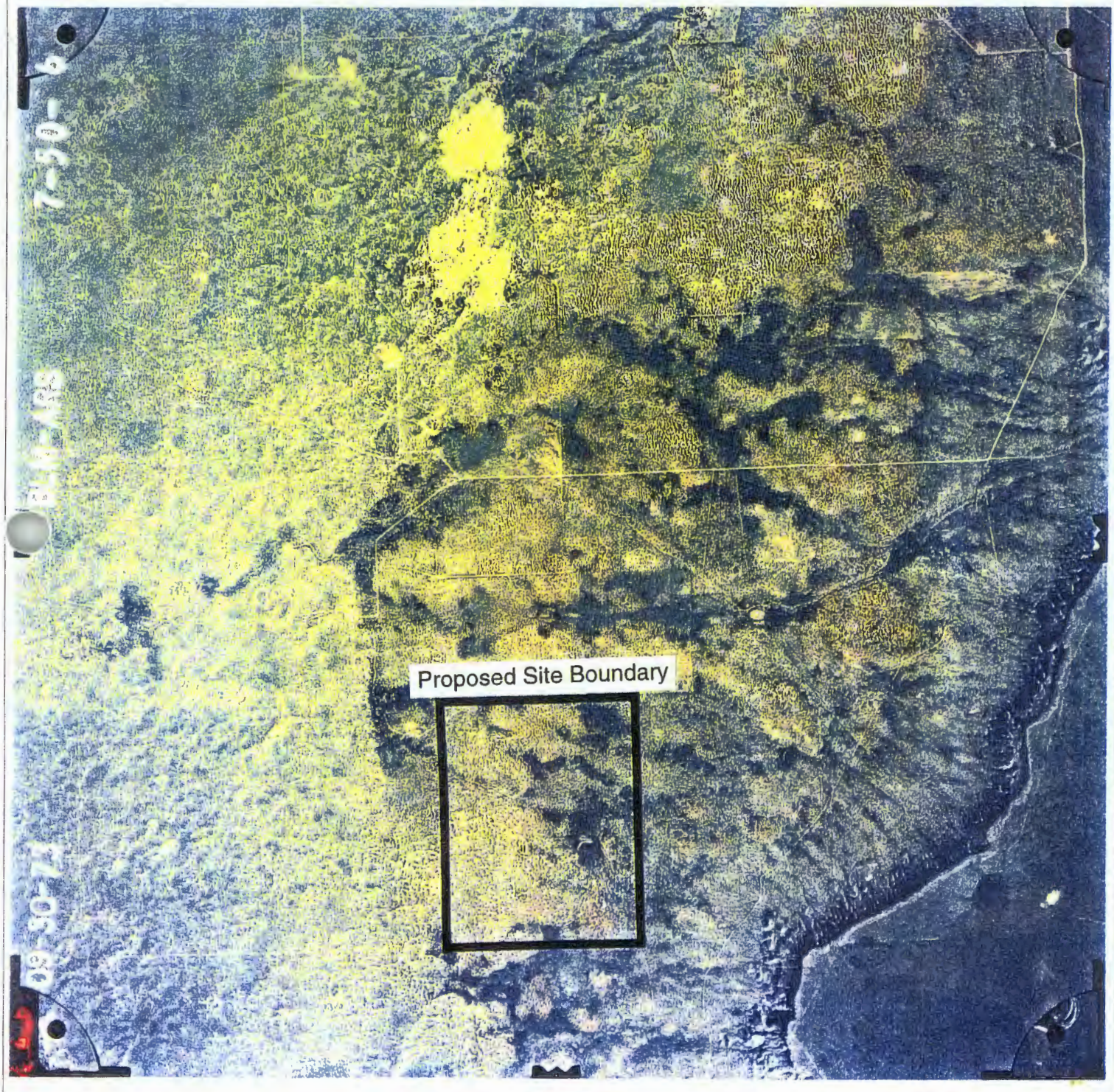

AIR PHOTO

SOUTH EAST NEW MEXICO

TRIASSIC PARK WASTE DISPOSAL

Figure 3-15

ONE INCH ≈ 2000'

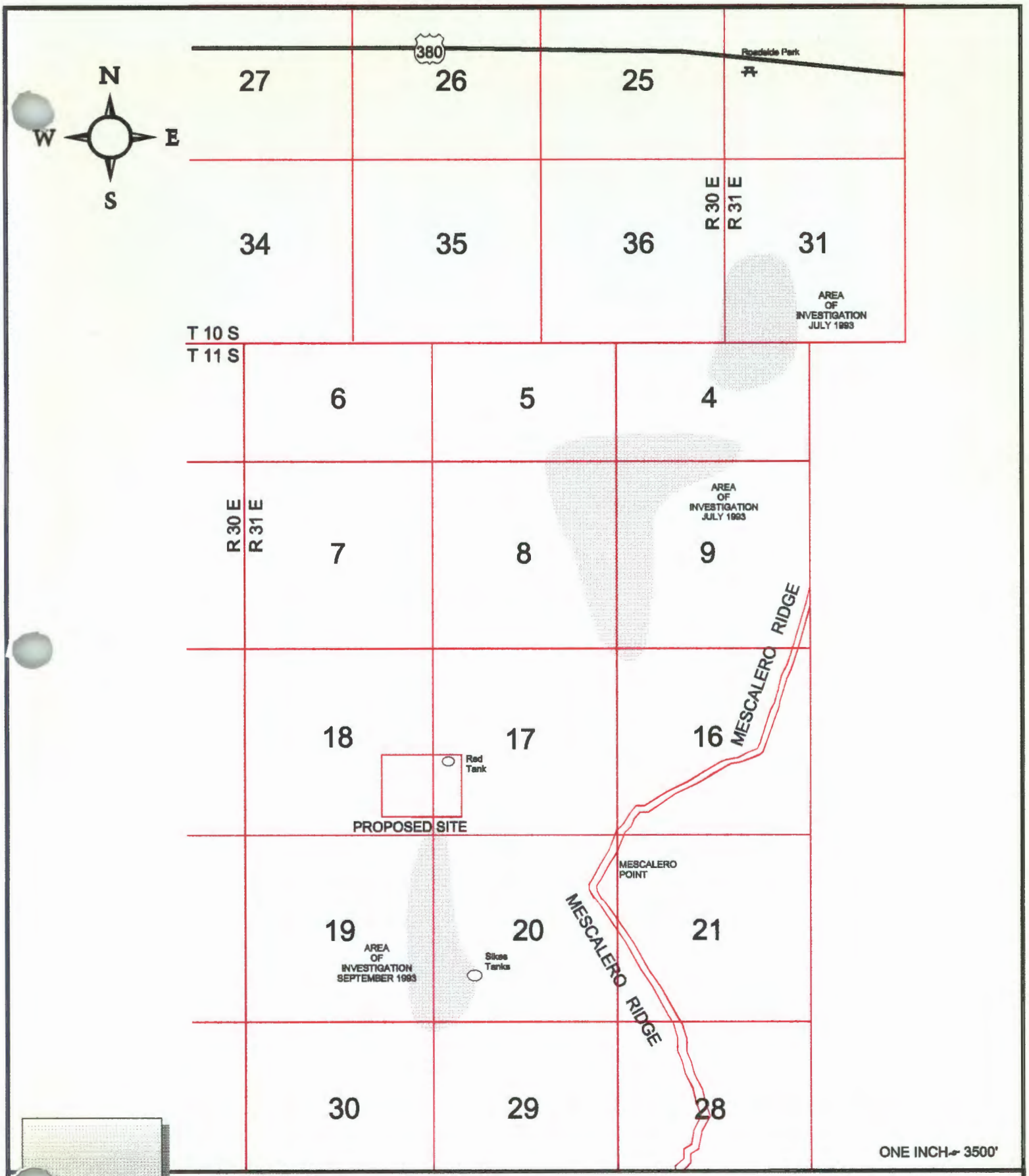

PROJECT AREA

TRIASSIC PARK WASTE DISPOSAL FACILITY

Figure 3-16

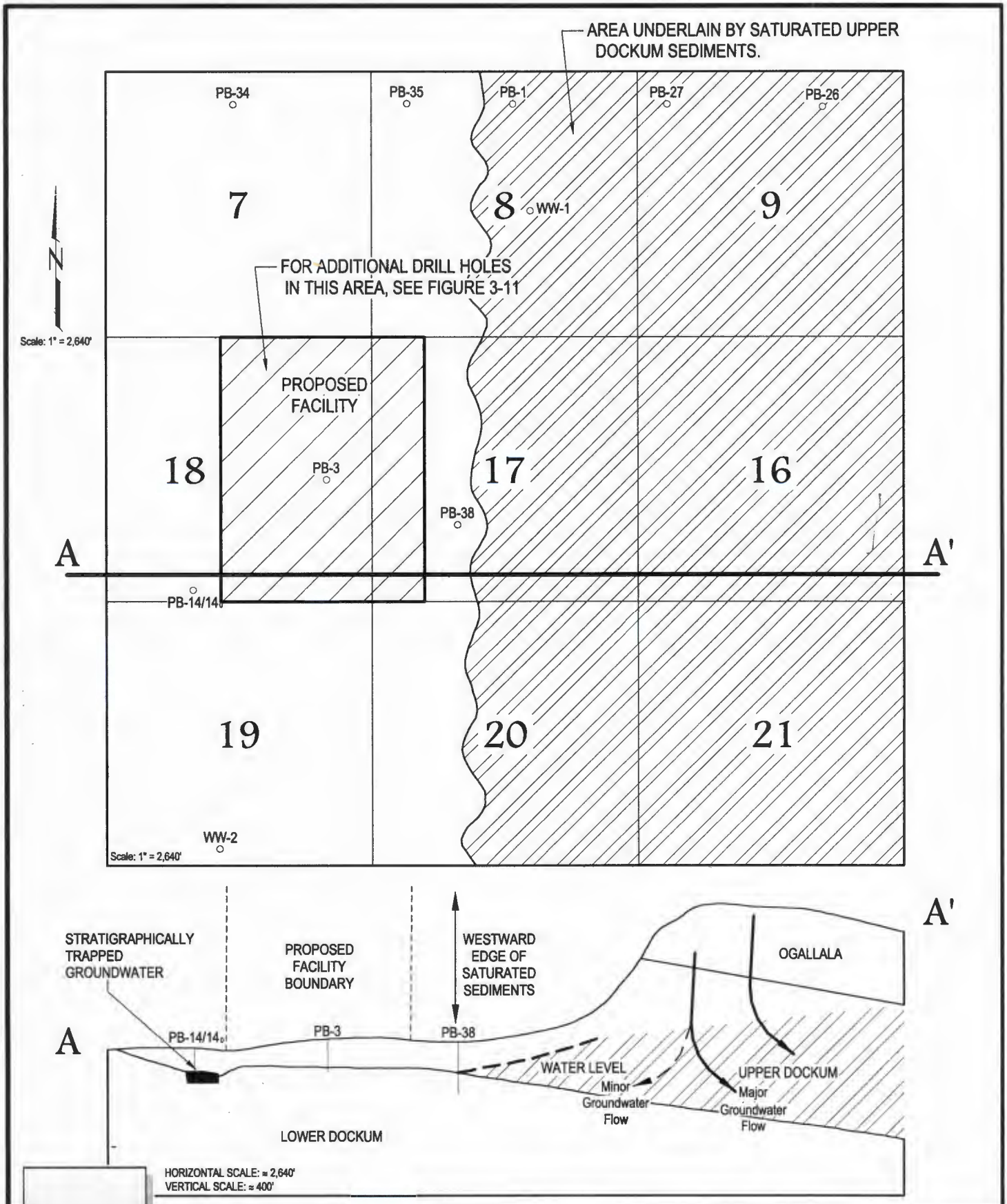

UPPER DOCKUM GROUNDWATER

TRIASSIC PARK WASTE DISPOSAL FACILITY

Figure 3-18

AutoCAD FILE: GANDY-FIG2-18

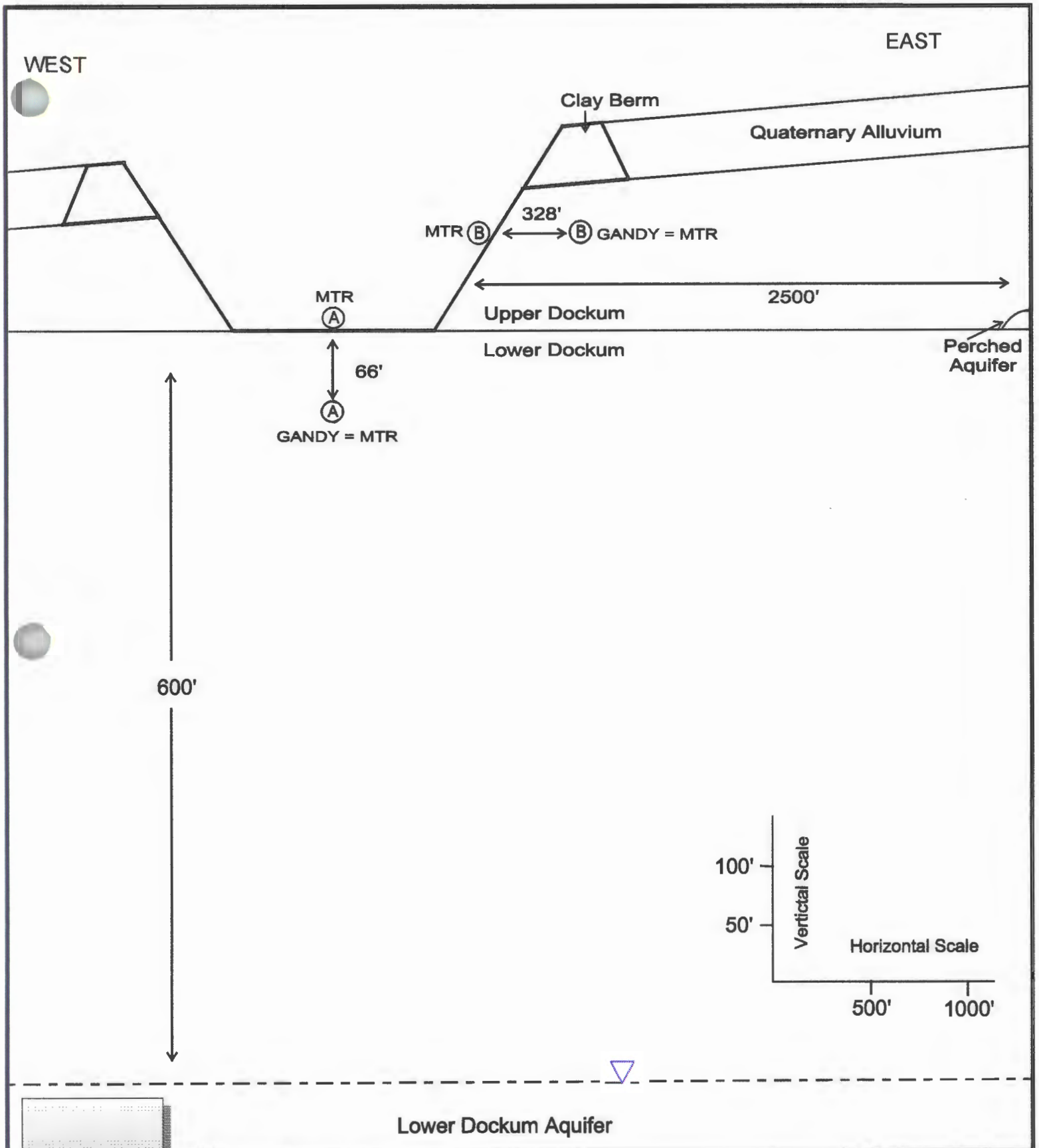

LANDFILL PROFILE

TRIASSIC PARK WASTE DISPOSAL FACILITY

Figure 3-19

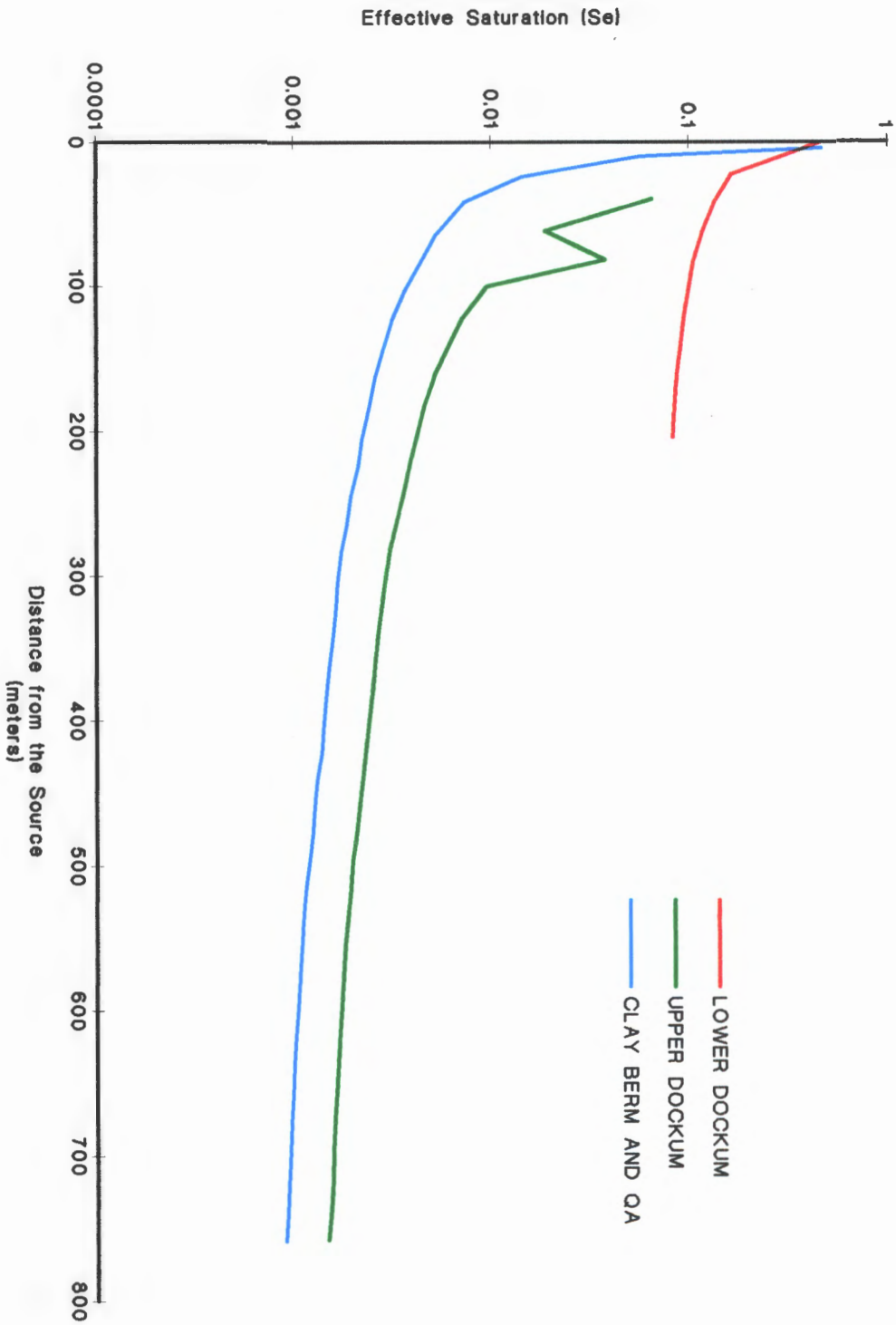

STEADY STATE EFFECTIVE SATURATION vs. DISTANCE FROM SOURCE

Figure 3-20

TRIASSIC PARK WASTE DISPOSAL FACILITY

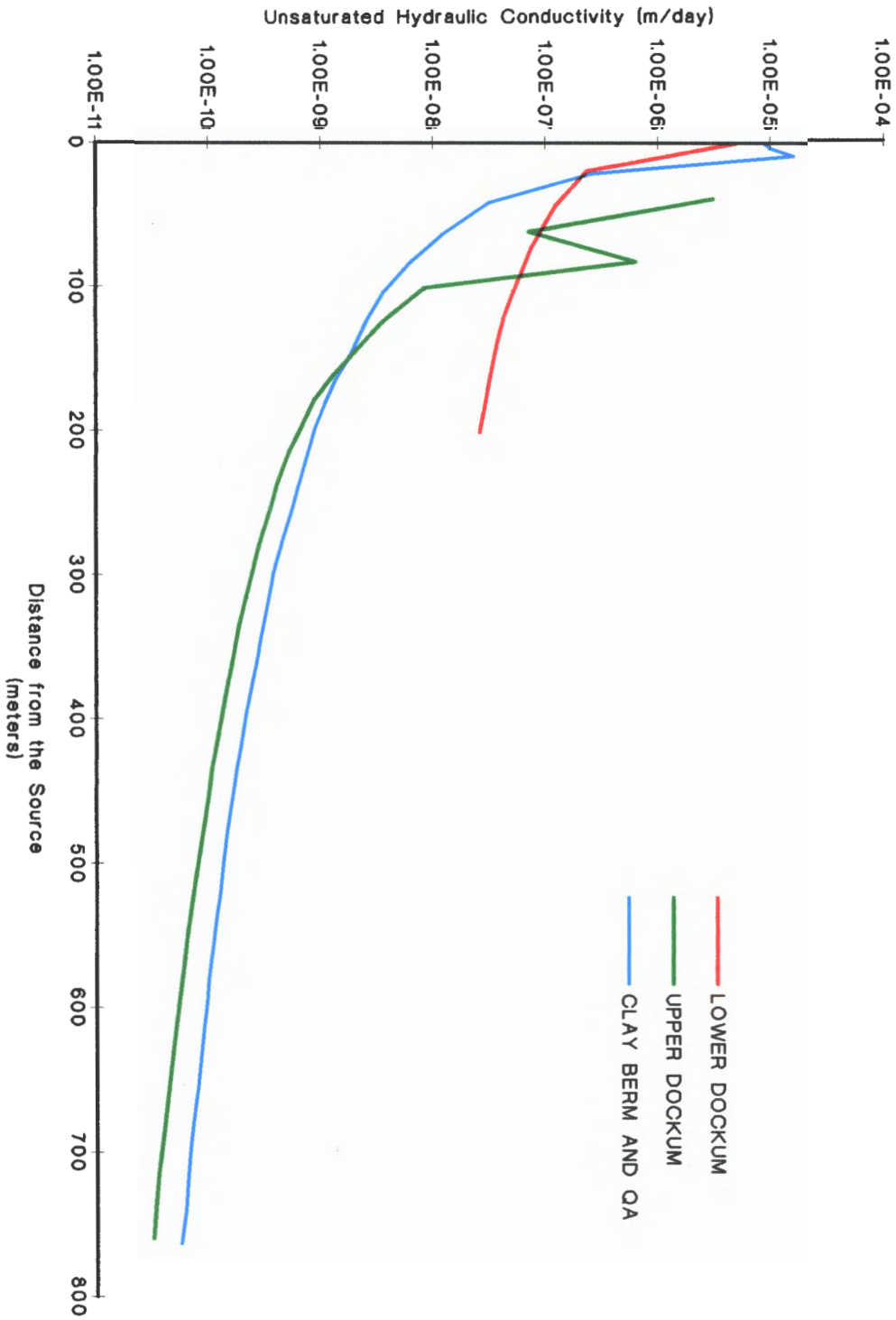

STEADY STATE UNSATURATED HYDRAULIC CONDUCTIVITY vs. DISTANCE FROM SOURCE

TRIASSIC PARK WASTE DISPOSAL FACILITY

Figure 3-21

AutoCAD FILE: GANDY-FIG3-21

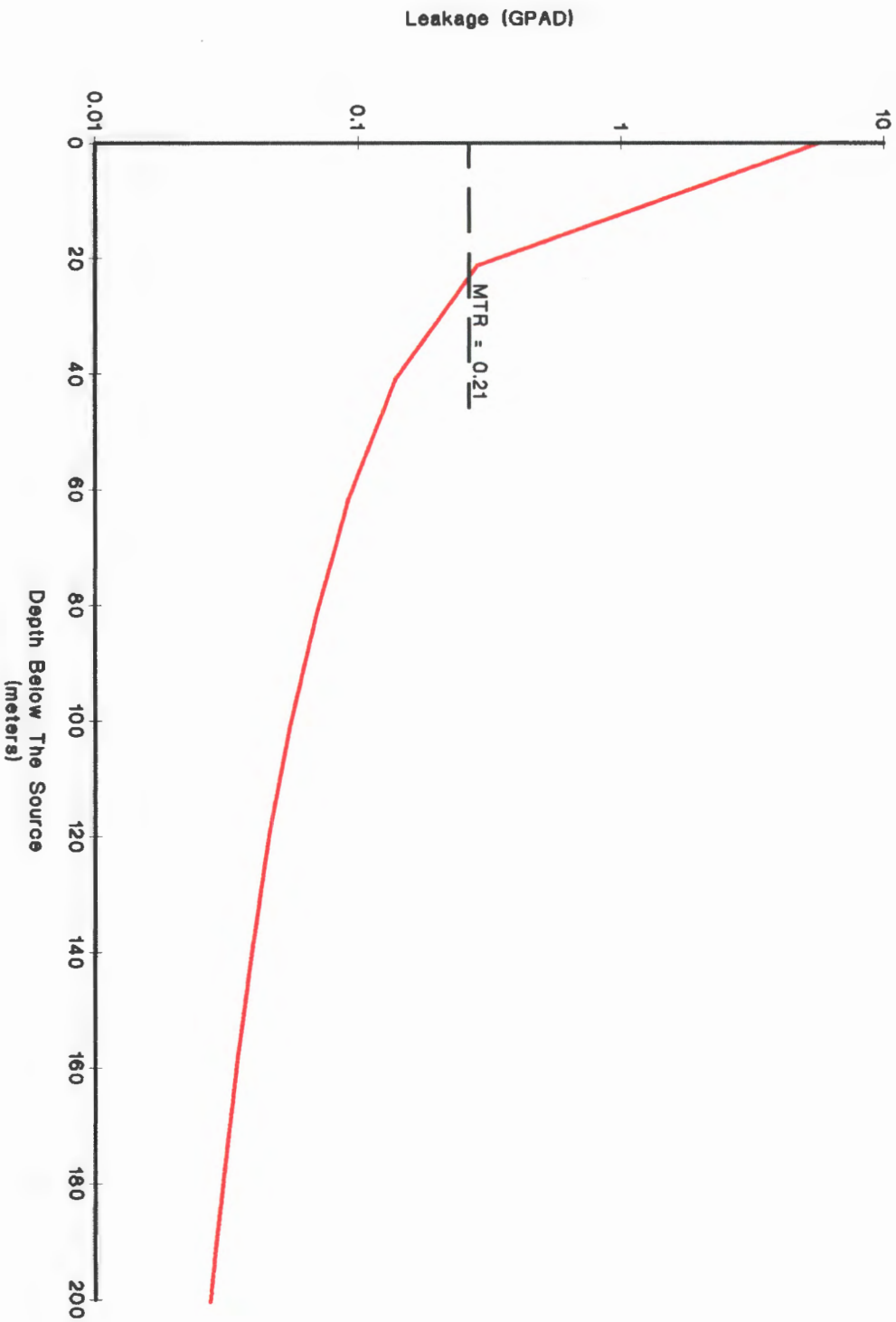

STEADY STATE LEAKAGE INTO LOWER DOCKUM vs.DISTANCE FROM SOURCE

Figure 3-23

TRIASSIC PARK WASTE DISPOSAL FACILITY

AutoCAD FILE: GANDY-FIG3-21

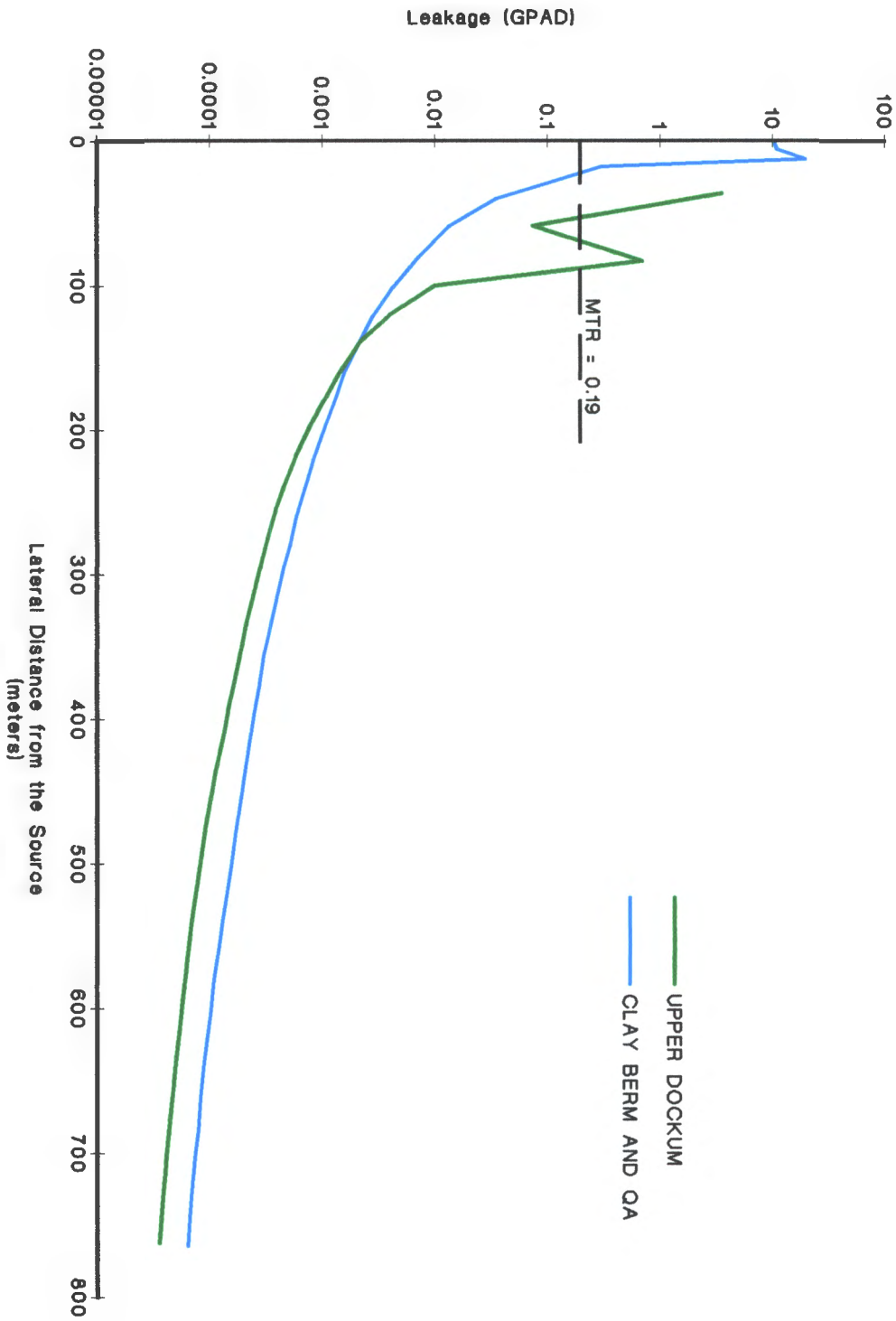

STEADY STATE LEAKAGE vs. LATERAL DISTANCE FROM SOURCE

TRIASSIC PARK WASTE DISPOSAL FACILITY

Figure 3-24

AutoCAD FILE: GAIDY-FIG3-24

4.0 WASTE ANALYSIS PLAN

This Waste Analysis Plan describes procedures and analytical methods that will be used to evaluate wastes received from off site and waste generated onsite. The plan summarizes the Facility's waste acceptance program, waste tracking system, sampling methods, analytical methods, and quality assurance/quality control (QA/QC) procedures.

4.1 REGULATORY REQUIREMENTS

Regulatory references cited in this plan include EPA regulations found in 40 CFR Part 264 Subpart B, 40 CFR Part 268, and 40 CFR Part 261, which have been adopted by the State of New Mexico in the New Mexico Hazardous Waste Management Regulations (20 NMAC 4.1).

40 CFR 264.13(a) describes the general requirements for waste analysis (i.e., sampling and analysis of the waste). Section 264.13(b) requires the owner/operator of a treatment, storage, and disposal operation to develop and follow a written Waste Analysis Plan describing the procedures the Facility will implement to comply with Section 264.13(a). Section 264.13(c) describes the requirements with which facilities accepting wastes from off site sources must comply. Section 268 describes the LDRs. Section 261 describes the criteria for identifying the characteristics of hazardous waste.

4.2 DESCRIPTION OF WASTES GENERATED AND RECEIVED AT THE FACILITY

The Facility is expected to generate the following types of wastes:

- leachate from the landfill and evaporation pond; handling of leachate from the landfill and evaporation pond is discussed in Section 4.3.3;
- PPE; PPE may include protective clothing, shoe covers, gloves, respirators, etc. The waste is likely to be non-hazardous, but it will be characterized and disposed of appropriately;
- spill residues; the type and extent of the spill will determine the necessary type of analysis, treatment, and disposal;
- MSW and C&D waste; these materials will be disposed of off site; and,
- run-on and run-off; Drawing 4 in the Engineering Report (Volume III) shows the diversion ditches that will be in place to prevent water from running onto the site or into the landfill. Run-off will be collected and tested after storm events to assure that no contaminated water leaves the site (see Section 2.5.1.6); and,
- the Facility will receive bulk solids and liquids from off site generators. It should be noted that free liquids will not be placed in the landfill. The wastes that will be accepted for placement in the landfill include all wastes listed in Part A of the application, provided that LDR treatment standards are met prior to placing the wastes in the landfill.
- Hazardous wastes which may be placed in the evaporation pond include all wastes listed in Part A of the application, provided that LDR treatment standards are met prior to placing the wastes in the evaporation pond.

The following wastes will not be accepted:

- PCB liquids that are ignitable or have PCB concentrations $\geq$ 50 ppm;

- class A explosives;
- radioactive/nuclear;
- infectious/biologic/pathogenic;
- dioxins (EPA codes F020, F021, F022, F023, F026, F027);
- MSW, C&D waste and special waste;
- compressed gases; and,
- unknown or unidentified wastes.

4.3 WASTE ACCEPTANCE PROGRAM

This section provides a summary of the Facility waste acceptance program and includes a description of (1) requirements for off site generators that must be met before generators will be authorized to send any waste to the Facility; (2) first-time and ongoing waste acceptance procedures for off site waste generators; and (3) waste acceptance procedures for onsite-generated waste. The waste acceptance program establishes the procedures that will be used to inspect and verify each shipment of hazardous waste received at the Facility to ensure that the waste received matches the waste description provided by the generator.

4.3.1 First-Time Waste Acceptance Criteria And Procedures For Off Site Generated Waste

Off site generators will be required to meet specific acceptance criteria before their waste will be accepted at the Facility. These criteria are described below:

4.3.1.1 Pre-shipment Procedures

The Facility will require that waste generators supply a waste profile form and a representative sample of the waste prior to sending the initial shipment of any specific waste type. The waste profile form will include waste characterization data and the generator's basis for the data (i.e., process knowledge or laboratory analysis). The waste profile form provided in Appendix H (Volume II) may be used by generators or a form supplied by the generator with comparable information may be used if approved by the Facility. Table 4-1 lists the minimal parameters that the generator waste profile must include and the rationale for each of the parameters.

Each waste stream from each generator will be subject to complete analysis by an independent laboratory the first time the waste stream is received at the Facility. Each waste with reactive properties will also be tested for compatibility with the landfill liner. Guidance for selecting analytes and analytical methods for conducting this complete sample analysis are described in Section 4.6. The analytical results will be compared with the generator's waste profile form, and discrepancies will be resolved with the generator prior to approval being granted to the generator to ship the waste. Information from the waste profile form and analytical results will be compared with the Facility's permit to ensure that the waste is acceptable for storage, treatment, and disposal at the Facility. A flow diagram of the pre-acceptance procedures for first-time waste shipments is provided in Figure 4-1.

Generators with waste types that have been previously accepted at the Facility will be required to supply a new waste profile form or representative sample only if the process generating the waste has

changed, or if the generator is requested to do so by the Facility for an annual or biennial waste verification, as described in Section 4.3.2.2.

4.3.1.2 Procedures to Ensure Compliance with LDR Standards

The waste pre-shipment approval procedures described in Section 4.3.1.1 will be used to screen wastes for LDR compliance before the wastes are received at the Facility. Incoming waste procedures will require that all documentation, including the manifest and LDR certification, be reviewed against the waste profile form and the fingerprint test results (described in Section 4.3.2.1) to confirm the generator's characterization data. Unresolved discrepancies in the paperwork or between the paperwork and analytical results will cause the load to be rejected.

No wastes will be placed in the landfill until it is certain that those wastes meet applicable LDR standards, as set forth in 40 CFR 268. The sampling and analysis protocols outlined in Sections 4.5 and 4.6 of this permit application will apply to all wastes to ensure compliance with LDR standards.

F001 - F005 spent solvent wastes will not be disposed of in the landfill unless applicable treatment standards set forth in 40 CFR 268 Subpart D are met. Sampling and analysis procedures to verify compliance will be consistent with those implemented to ensure that treatment standards for other waste types are met. As pointed out in Section 4.2, dioxin wastes will be prohibited at the Facility.

Characterization information supplied by off site generators, which will be verified by waste analysis at the time of receipt, will be used to determine whether a waste is a "California List Waste". California List restrictions apply as follows:

1. Liquid hazardous wastes containing PCBs at a concentration greater than or equal to 50 ppm;

2. Liquid characteristic wastes containing over 134 mg/l nickel and/or 130 mg/l thallium;

3. Characteristic wastes containing halogenated organic compounds (HOCs) at concentrations greater than or equal to 1,000 mg/l (liquids) or mg/kg (solids), where the HOCs are not derived from listed hazardous wastes (i.e., F-, K-, P-, or U- listed wastes); and,

4. During any nationwide extension to the effective date for either a characteristic or listed waste.

As described in Section 4.2, liquid wastes containing PCBs in concentrations greater than or equal to 50 ppm will be prohibited at this Facility. Treatment of other California List wastes to meet LDR standards will be done in a manner consistent with other wastes which are treated to LDR standards.

Section 2.5.3.7 of this permit application discusses Facility requirements for acceptance of lab pack wastes. Prior to disposal, hazardous wastes contained in lab packs will be treated to meet applicable treatment standards for each waste type. Procedures to determine applicable treatment requirements, and treatment of lab pack wastes to applicable standards, will be consistent with procedures implemented for other waste types. In cases where hazardous lab pack wastes are combined with non-lab pack hazardous wastes prior to or during treatment, the entire mixture will be treated to meet the most stringent treatment standard for each hazardous constituent before being disposed of in the landfill.

The Facility will accept contaminated debris only in cases where that debris will remain hazardous after it has been treated in accordance with 40 CFR 268.45(b) or (c). This regulatory requirement stipulates that "Hazardous debris that has been treated using one of the specified extraction or

destruction technologies in Table 1 of this section (CFR 268.45) and that does not exhibit a characteristic of hazardous waste identified under Subpart C, Part 261, of this chapter after treatment is not a hazardous waste and need not be managed in a subtitle C facility." Hazardous debris generated off site that can be rendered non-hazardous through treatment may be accepted only if necessary treatment capability exists at the Facility.

Wastes that carry more than one characteristic or listed waste code will be treated to the most stringent treatment requirement for each hazardous waste constituent of concern prior to disposal in the landfill. When wastes with differing treatment standards are combined solely for the purpose of treatment, the most stringent treatment specified will be met for each constituent of concern in the combined waste prior to land disposal.

Dilution of restricted wastes will not be used as a substitute for adequate treatment for non-toxic hazardous characteristic waste. For toxic characteristic wastes and listed wastes, if wastes are amenable to the same type of treatment and aggregation is a part of treatment, then the aggregation step does not constitute impermissible dilution.

Wastes that are treated onsite in the solidification unit will be tested after treatment and before disposal to verify that LDR standards have been met. All information obtained to document LDR compliance will be maintained in the Facility operating record.

4.3.2 Ongoing Waste Acceptance Procedures For Off Site Generated Waste

All wastes that have been authorized for receipt at the Facility, whether from new or existing generators, will follow a similar path of acceptance and routing at the Facility. These procedures are described in the following sections.

4.3.2.1 Incoming Waste Shipment Procedures

When a waste has been approved for treatment and/or disposal at the Facility, as described in Section 4.3.1.1, the waste may be scheduled for shipment. Twenty-four hour notice will be required from each generator prior to waste shipment. This time will enable the Facility to prepare for receipt of the waste, which may include ensuring that adequate capacity exists in the container storage area or treatment unit for the incoming waste, preparing for sample collection and fingerprint analysis, and preparing all necessary documentation on the waste shipment. If adequate capacity to receive the waste is not available, the generator will be told not to ship the waste until notified by the Facility.

Incoming waste shipment procedures are shown in Figure 4-2. When a waste shipment arrives at the Facility, the truck will be routed to a parking area outside the Facility gate while documents are reviewed. Required documentation includes a waste manifest, an LDR certification, and a copy of the waste profile form (or waste profile number if the form is already on file) for the waste in the shipment. The paperwork will be reviewed for completeness and checked against the waste shipment to verify that the number of containers and waste labels match the description on the manifest. If the paperwork is in order, the truck will be routed to the truck sample station, a staging area inside the Facility gate. If a discrepancy is found in the paperwork, the Facility will contact the generator for resolution prior to acceptance of the load and will reject the load if the discrepancy cannot be resolved (generally in less than 24 hours). During the time the issue is being resolved, the waste shipment will remain in a secure area inside the Facility gate. In those instances where a discrepancy with the manifest cannot be resolved within 15 days of receiving the waste, a letter will be submitted to the NMED describing the discrepancy and the attempts made to reconcile it. A copy of the manifest or shipping paper at issue also will be provided to NMED, as specified in 40 CFR 264.72(b). All discrepancy resolutions will be documented in writing and maintained in the Facility operating record.

At the truck sample station, the load will be visually inspected and sampled by Facility personnel. Certain loads may not be sampled, at the discretion of the Facility manager or laboratory supervisor, for environmental and safety reasons (e.g. severe weather which causes unsafe working conditions). In these cases, the generator will be required to provide a signed certification that the load conforms with the waste profile form.

Samples for fingerprinting testing of parameters appropriate for the waste type will be collected from each different waste stream in a waste shipment. Sampling procedures, including types of samples and composite and random sampling methods, are described in Section 4.5.

Fingerprint tests will assure that the generator description of the waste is correct. This check will assure that (1) incompatible wastes are correctly segregated; (2) approved EPA waste codes are not being violated; and (3) other characteristics that affect storage, treatment, or disposal are properly identified. The waste will be fingerprinted for the same parameters selected by the generator as reported on the waste profile form. The selected parameters must have an associated analytical method listed in Section 4.6 to be included in the fingerprint test.

One qualitative and one quantitative parameter must be analyzed, at a minimum, as listed in Table 4-2. The selection of parameters will involve consideration of the following factors:

- the identity of certain waste types that are not permitted (this may require selection of parameters not reported by the generator);
- a determination of whether the wastes are within the management unit's operational acceptance limits;
- potential ignitability, reactivity, or incompatibility of the wastes; and,
- an indication of any changes in waste composition that may have occurred during transportation or storage

One of two possible methods will be used for fingerprint testing to determine waste compatibility. The first method will involve process knowledge and the second will involve chemical analysis.

Process knowledge or assessment information provided on the waste profile form may be used to assign compatibility codes to each waste type based on Appendix V of 40 CFR Part 264. Potentially incompatible wastes will not be stored, treated, or disposed of in the same location.

Chemical analysis will be accomplished in three steps, as appropriate for the waste being analyzed. The first step is an analysis of the waste for reactive cyanide and sulfide. This analysis will be used to determine the waste's potential to release dangerous levels of hydrogen cyanide or hydrogen sulfide gases in acidic conditions (i.e., pH less than 2).

The second step is an evaluation of the reactivity characteristics of the waste through process knowledge and a series of analytical procedures that will be test for the presence of reactive chemical groups. The procedures in the EPA document *Design and Development of a Hazardous Waste Reactivity Testing Protocol*, February 1984, EPA-600/2-84-057 will be followed and the results used to assign the waste a reactivity group designation. Figure 4-3 summarizes the reactivity testing protocol.

The third step uses the reactivity group designation to evaluate compatibility of the waste with other wastes by comparing it to the compatibility matrix, shown in Figure 4-4. (Refer to EPA document *A Method for Determining the Compatibility of Hazardous Wastes*, April 1980, EPA-600/2-80-076 and Appendix V of 40 CFR Part 264 for additional information on waste compatibility.) A waste may be

rejected if it is incompatible based on incompatibility with other wastes as determined from this process.

Sorbents that have been added to any waste must be nonbiodegradable as defined in 40 CFR Part 264.314. The waste profile form must specify whether or not a sorbent was added to the waste. If a sorbent was added, the type of sorbent must be identified and the form must indicate whether it is biodegradable. If any of this information is not present, the generator will be contacted for clarification. If uncertainty remains about the biodegradability of added sorbent but the type of sorbent is known, 40 CFR 264.314(e)(1)(i-iii) will be reviewed. These sections provide a list of sorbents that are known to be biodegradable. If the sorbent's biodegradability cannot be determined from the list or if the name of the sorbent is unknown, the material must be analyzed to assure that it is not biodegradable following one of the American Society for Testing and Materials (ASTM) tests referenced in 40 CFR Part 264.314(e)(2). If the waste is determined to contain biodegradable sorbents, it will be rejected.

If the fingerprint test confirms the generator information provided on the waste profile form and manifest, the shipment will be accepted, and the manifest will be signed by Facility personnel. The waste will then be sent to the container area to await treatment and/or disposal, or it will be transferred directly to the treatment or disposal area.

If the fingerprint test conflicts with the waste profile information, the Facility may take any or all of the following actions:

- resample the waste, if necessary, and perform a second fingerprint test. The Facility manager has discretion to accept the waste if the second fingerprint results match those on the waste profile sheet;
- perform further characterization as necessary to verify the composition of the waste by sending a sample to a qualified independent analytical laboratory; and/or,
- reject the entire waste shipment or the nonconforming portion of the shipment.

4.3.2.2 Ongoing Complete Waste Analysis

Periodically, the Facility will perform corroborative testing of incoming waste streams to confirm the information provided by the off site generator on the waste profile form.

Retesting of each waste stream will also occur. The frequencies for retesting are outlined below. If one or more waste shipments in a calendar year from any single generator do not match the fingerprint tests, full sample analyses of each waste stream from that generator will be performed annually. Waste analyses performed by an independent analytical laboratory for purposes of resolving discrepancies between generator information and fingerprint tests, as described in Section 4.3.2.1, will be adequate to meet this requirement.

If all waste shipments in any given calendar year from a single generator match the fingerprint analyses, full sample analyses of each waste stream from that generator will be performed biennially.

A generator must notify the Facility if the process generating a waste stream changes. The generator must send the Facility a revised waste profile form and a representative sample of the waste prior to the first shipment of the waste after the process changes. The waste must pass the requirements for the initial receipt of a new waste, as described in Section 4.3.1, in order for the Facility to continue to accept the waste stream.

4.3.3 Procedures for Onsite Generated Waste

Wastes generated onsite will be treated at the stabilization unit prior to disposal in the landfill and may be sampled and characterized to determine an appropriate treatment mixture prior to their acceptance. Selection of treatment reagents and quantities will be established according to the waste profile and the post-treatment LDR requirements.

After wastes have been treated at the stabilization unit, they will be retested prior to placement in the landfill to determine if they meet LDR requirements. All solidified wastes will be tested for the presence of free liquids using the paint filter test, and will be analyzed for other parameters determined by the characterization of the waste before solidification. For most materials, the TCLP extraction method will be performed, followed by an analysis of the leachate for the appropriate parameters. (Refer to EPA test method 1311, 40 CFR Part 261, Appendix II.) The EPA universal treatment standards, promulgated on September 19, 1994, will be met for wastes treated onsite.

Leachate will be generated from the landfill and evaporation pond. It will be pumped out of the unit sumps into tanks or tanker trucks. It will then be tested to assure compliance with LDR requirements defined in 40 CFR Part 268 for F039 listed wastes. Based on the test results, the frequency of sampling and required parameters for leachate analysis will be determined. Leachate that meets applicable LDR requirements will be placed in the evaporation pond. Leachate that does not meet applicable LDR requirements will be treated before landfilling.

4.4 WASTE TRACKING SYSTEM

Each incoming waste stream in a shipment will be tracked using a unique numeric or alpha-numeric designation. This designation will be recorded on (1) all incoming paperwork from the generator; (2) samples received from the generator; (3) samples taken onsite; and (4) site-generated records.

A file will be maintained for each batch of waste received, including all generator-supplied information, the results of fingerprint and additional analyses; and documentation concerning the final disposition of the batch.

4.5 SAMPLING METHODS

Sampling methods will follow Appendix I of 40 CFR Part 261. Table 4-3 lists waste matrices and appropriate sampling methods that will be used at the Facility. The methods and equipment used for sampling wastes will vary with the form and consistency of the material to be sampled.

Random sampling will provide a set of unbiased, representative samples for an entire batch of waste. EPA-approved ASTM method D 140-70 identifies the method for estimating the number of containers that should be sampled.

Composite sampling is the process of taking several samples and combining them into one sample, which is then analyzed for constituents of concern. It is a valid method for homogeneous samples.

Laboratory samples will be maintained in a secure area and retained until holding times expire, as listed in SW-846, or three months, whichever comes earlier. Afterward, samples will be disposed of with compatible waste batches. Records of the date the samples are removed from storage and the date and method of disposal will be maintained.

4.6 ANALYTICAL METHODS

The analytical methods for fingerprint samples are listed in Table 4-2. Methods appropriate for a given sample type and composition will be selected from this table.

Analytical methods used for the full characterization will follow Test Methods for Evaluating Solid Waste: Physical and Chemical Methods (SW-846, EPA). Methods appropriate to the waste type will be selected using process knowledge. Examples of parameters and corresponding analytical methods that might be used are provided in Table 4-4. Table 3 of 40 CFR Part 261, Appendix III contains a list of SW-846 methods appropriate for waste characterization.

4.7 LABORATORY QUALITY ASSURANCE/QUALITY CONTROL (QA/QC)

All sampling and analytical procedures will include provisions for sound QA/QC practices. The onsite laboratory manager will be responsible for developing and implementing a written QA/QC program for the laboratory. The laboratory manager will have the following additional responsibilities:

- ensuring that laboratory personnel are adequately trained to perform sampling and analytical procedures;
- ensuring that equipment and instrumentation under their control are calibrated and functioning properly;
- coordinating internal and external quality assurance audits; and,
- reviewing procedures and QA plans of outside laboratories used.

The laboratory QA/QC plan will describe procedures for sample management, including document creation, bottle preparation, sample preservation, sample receipt, sample storage, chain-of-custody documentation, reporting, and sample and records retention.

QA/QC practices will be considered during the selection of independent analytical laboratories. QA/QC practices that will be reviewed include written procedures, certifications, internal and external audits, personnel training, and chain-of-custody procedures.

QA/QC objectives for the analytical data are a means of checking and controlling the sources of an error in analytical data results. These objectives are generally expressed in the following terms:

- Accuracy: Accuracy refers to the ability of the system to measure a sample's true value. Accuracy is expressed as a percent recovery equal to the difference between the average of the sample's true values and the average of the laboratory determined values. Because the sample's true value is relative to the sample collection procedures, inferences are drawn from the analysis of field and trip blanks and laboratory matrix-spiked samples.
- Precision: Precision measures the replicability and repeatability of the analytical results. Precision is generally monitored using the results of duplicate and spiked samples. Precision is expressed as the relative percent difference between the percent recovery of two individual sample values. Any variability of known or established precision limits may be a result of improper sampling, handling, or laboratory procedures.
- Representativeness: Representativeness is the degree to which a data set accurately reproduces the characteristics of the population samples within the subject matrix. Analytical data are considered representative of the sample matrix if results are statistically distributed within the defined limits of the compound's percent recovery and relative percent difference.

- Completeness: Completeness is a record of the amount of data collected, analyzed, and validated compared to the amount specified in the site specific sampling plan. Completeness is composed of field and laboratory activities. Field completeness is measured by the number of samples collected, compared to the number specified in the sampling plan. Laboratory completeness is measured by the number of samples analytically validated, compared to the number of samples received in the laboratory. Completeness will be measured by the ratio of validated samples compared to the number of samples planned, expressed as a percentage.

Specific QA/QC procedures to be used for sampling, chain-of-custody, calibration, analytical methods, reporting, internal QC, audits, and preventative maintenance are described below.

Analytical Laboratory QA Objectives

The laboratory's QA program must certify the precision and accuracy of their analytical data, and confirm by documentation all phases of sample handling, data acquisition and transfer, report preparation, and report review. In addition, the QA programs will provide for storage and retrieval of samples and data.

The laboratory's QA program will specify that detailed instructions be available for performing all activities affecting the quality of analytical data.

Analytical Procedures

Laboratory procedures and methods to be used contain the following information:

- Scope – A description of the scope of applicability of the procedure.

- Principal – A brief description of the steps to be taken and/or the theory involved in the laboratory analysis.

- Interference – A description of known interfering agents that would cause difficulty in performing the laboratory analysis or lead to erroneous results.

- Apparatus – A listing or description of equipment required to perform the laboratory analysis.

- Reagents – A listing of the reagents required, a description of the steps involved in preparing the reagents, and instructions on storage requirements and retention times.

- Procedures (Instructions) – An enumeration of the sequence of activities to be followed. The topics include sample preparation or pretreatment, sample storage requirements, instrument set-up, standardization or calibration, sample analysis, calculations, and glassware cleaning procedures. The procedure includes any precautions, explanation, or clarifications as needed to properly perform the analysis. These include safety precautions, the frequency of standardization required, the acceptance criteria or procedures for determining the acceptability of standard curves, clarifications or special techniques critical to the analysis, and how the analyst determines the reliability of sample results based on the standard curves.

- Quality Control Requirements – A listing of the QC checks to be performed and the acceptance criteria used to evaluate the QC data.

- Reference: - A listing of the publications from which the information was derived in preparing the laboratory method. All references pertain to these documents. As a rule, laboratory methods are derived from the following publications:

  - *Standard Methods for the Examination of Water and Wastewater*, American Public Health Association.

  - *Annual Book of Standards*, American Society for Testing and Materials.

  - *Methods for Chemical Analysis of Water and Waste*, Environmental Protection Agency.

  - *Test Methods for Evaluating Solid Waste*, SW-846, Environmental Protection Agency.

Editions used will be those currently specified in 40 CFR, as updated at the time of Facility operation.

Laboratory Quality Control Checks
The following analyses will be completed in the laboratory as measures of accuracy and precision of the analytical process.

- Laboratory Duplicates – Laboratory duplicate samples shall be analyzed to monitor for intralaboratory precision of data generated. These samples shall be analyzed on no less than a 5% basis with at least one replicate if fewer than ten samples are analyzed for any particular parameter.

- Spiked Samples – Shall be analyzed to monitor for accuracy of data due to interferences that may be present in the sample and thus influence the reported results. These spiked samples shall be tested on no less than a 5% basis for any particular parameter. At least one spiked sample shall be run if fewer than ten samples are analyzed.

- Control Charts – Shall be utilized to effectively monitor and periodically review the accuracy of the data generated as a result of spike analyses. These charts also aid in observing trends in data so as to take corrective actions before data generated are out of control.

- Method Blanks – Are accomplished by treating purified water or ultra-cleaned sand in the same manner as samples to monitor potential contamination of samples due to contamination in solvents, reagents, glassware or laboratory equipment. Method blanks are included with each set of samples.

- Laboratory Equipment Blanks – Shall be analyzed to monitor potential contamination of samples due to improper or ineffective cleaning of equipment.

- Quality Control Samples – Shall be analyzed to monitor for accuracy of data generated. EPA check samples or samples purchased from a reputable independent source will be analyzed at the beginning of the project and also at regular intervals during the project.

- Surrogate Samples – Shall be analyzed in accordance with EPA guidelines for GC/MS analysis. Deuterated standards will be utilized as a measure of the recovery of the target compounds (that may be similar to the compounds in the standards) during analyses.

- Calibration Standards and Devices - Shall be used in the lab.

- Reagent Checks – Are accomplished by treating known laboratory blanks in the same manner as samples and reviewing data to verify that contamination has not been introduced as a result of reagents.

- Internal Standards - Prepared in the lab, shall be referenced against external standards to measure accuracy.

Laboratory Maintenance
The analytical laboratory will have in place a procedure that details the steps to be taken to calibrate and standardize instruments to ensure that analytical data produced are accurate. Records of all calibrations, preventative maintenance, and service calls will be readily available from the laboratory files.

A procurement procedure that identifies methods to be used to document and control the purchase of materials, parts, and services will be implemented by the laboratory. The procedure will include identifying the quality of laboratory chemicals and equipment, management approval of procedure items, inspection of shipments for compliance with requirements, and isolation of nonconforming items to be returned to vendors. The quality of all equipment must conform to the requirements specified in the latest edition of the EPA "Handbook of Analytical Quality Control in Water and Wastewater Laboratories," the Federal Register, or other regulatory agency publications. This procurement procedure will serve to ensure that spare parts routinely required will be readily available.

4.8 RECORD KEEPING

As required in 40 CFR 268.7, the following records will be maintained at the Facility.

- for wastes generated onsite, documentation of treating restricted wastes will be maintained;

- where onsite generated wastes are characterized to determine compliance with LDR standards using only process knowledge, site personnel will maintain all data used to make any such determination;

- where a representative sample of waste is analyzed to determine compliance with LDR standards, all waste analysis data will be retained onsite in Facility files; and,

- all notifications and/or certifications submitted by waste generators will be reviewed and maintained as part of the Facility operating record. These records will be maintained until Facility closure as required in 40 CFR 264.73.

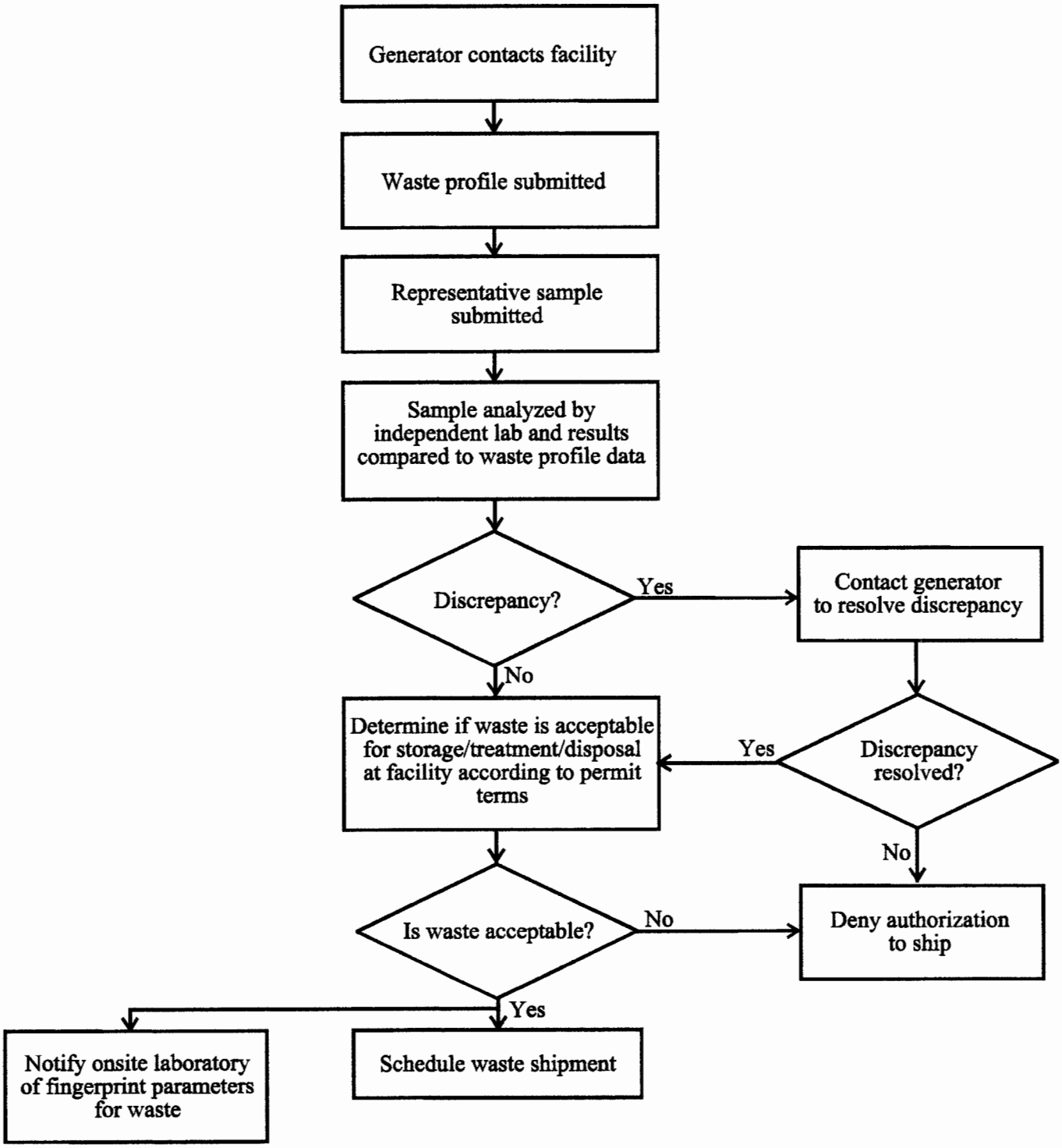

PRE-ACCEPTANCE PROCEDURE FOR FIRST TIME WASTE

TRIASSIC PARK WASTE DISPOSAL FACILITY

Figure 4-1

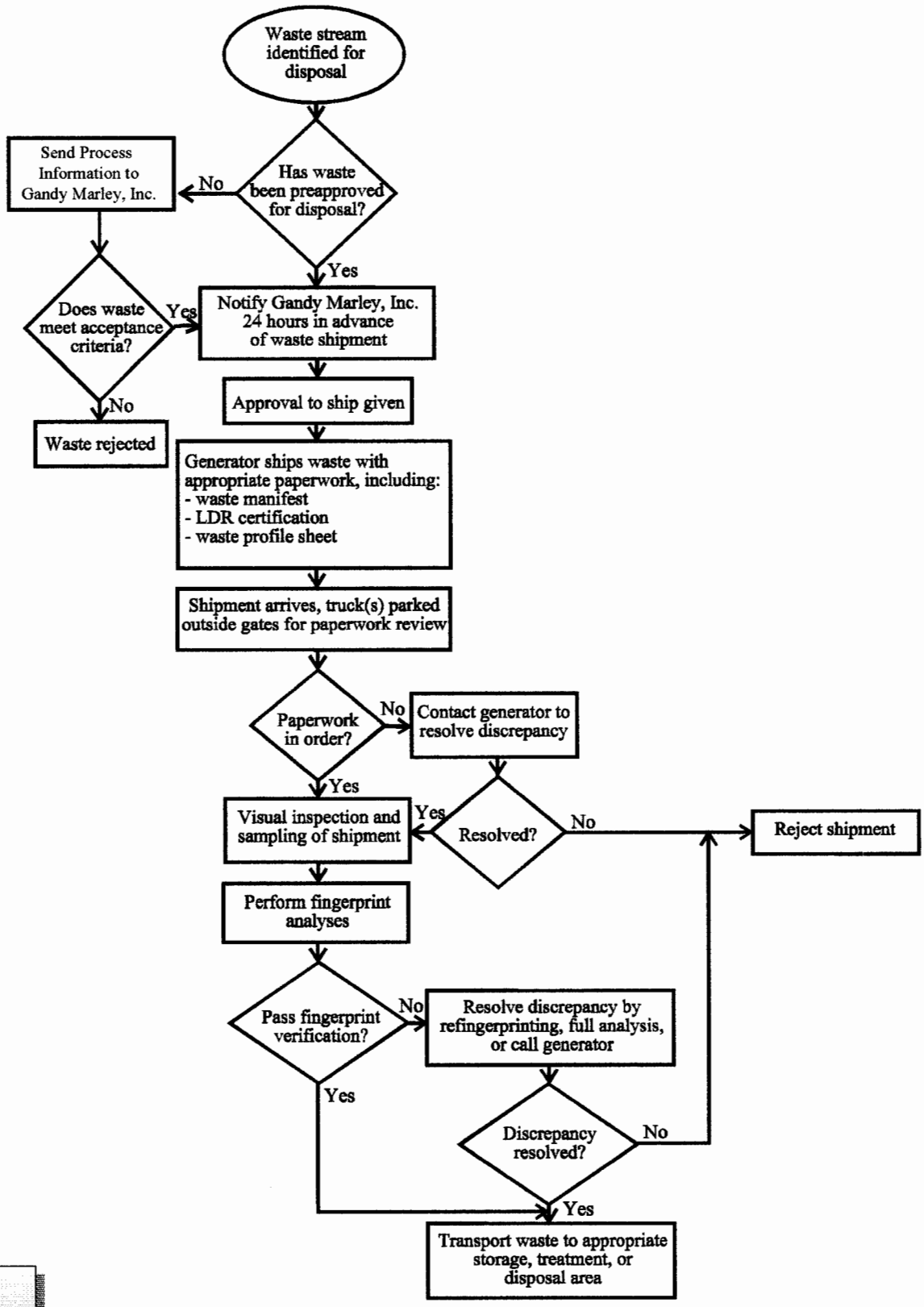

INCOMING WASTE SHIPMENT PROCEDURES

TRIASSIC PARK WASTE DISPOSAL FACILITY

Figure 4-2

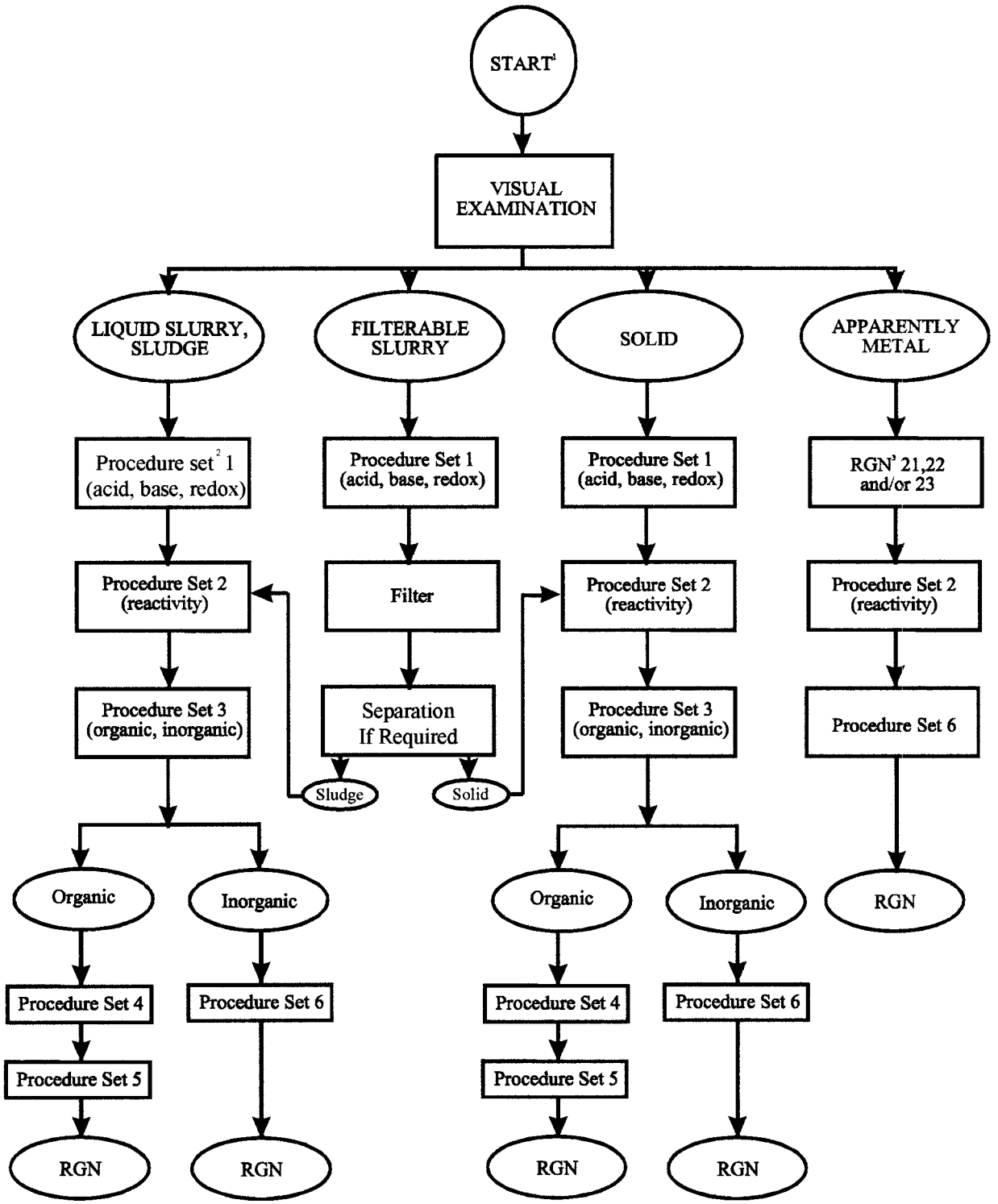

[1] Based upon its knowledge of the waste, a generator may only need to use parts of the following sequence to confirm the generator's knowledge of the material.
[2] Procedure sets are identified in EPA's "Design Development of a Hazardous Waste Reactivity Testing Protocol" (EPA 600/2-84-057, February 1984).
[3] RGN = Reactivity Group Number

Start, Stop, Continue
Procedure
Result

SEQUENCE OF PROCIDURE SETS FOR DETERMINING REACTIVITY GROUP

TRIASSIC PARK WASTE DISPOSAL FACILITY

Figure 4-3

TABLE 4-1
PARAMETERS REQUIRED ON GENERATOR WASTE PROFILE

Parameter	Rationale
EPA hazardous waste code(s)	The EPA hazardous waste code for each hazardous constituent must be identified, along with the concentration of those constituents in the waste to be disposed of.
Waste type / Waste description	A description of the waste based on both process knowledge and analyses must be provided. The waste description is used in the assignment of compatibility codes. A primary emphasis of the fingerprint analysis is to verify the generator waste description.
Waste subject to the land disposal restrictions	Wastes subject to the land disposal restrictions must be treated to meet requirements listed in 40 CFR Part 268 prior to land disposal. Wastes received for direct disposal at this Facility must meet these treatment requirements. Wastes subject to land disposal restrictions that are received for treatment at this Facility must be so designated on the shipping papers. These wastes may be stored at this Facility only for the purpose of accumulating quantities of waste necessary to facilitate proper treatment and disposal.
Physical state of waste/ presence of free liquids	This Facility can accept waste containing free liquids only for treatment, not for direct disposal (except small amounts in lab packs).

TABLE 4-2
ANALYTICAL METHODS FOR FINGERPRINT SAMPLES

Test	Method and Description	Qualitative or Quantitative
Appearance	Physical identification, color, viscosity, phase, and odor (ASTM D4979)	Qualitative
Free Liquids	Paint filter test, penetrometer, or visual	Qualitative
Ignitability	Match test, Pansky-Martens closed cup or Set-a-flash	Qualitative
Miscibility	50/50 mixture with water	Qualitative
Water Mix	ASTM D5058 Test Method C	Qualitative
Chlorinated Solvents	Colorimetric test or Beilsten test	Quantitative
Cyanide	Electrode or colorimetric test (ASTM D5049 Test Method B)	Quantitative
PCBs	Colorimetric test	Quantitative
pH	Electrode or pH paper (ASTM D4980)	Quantitative
Radioactivity	Geiger counter	Quantitative
Specific Gravity	Hydrometer	Quantitative
Sulfide screen	ASTM 4978	Quantitative

TABLE 4-3
SAMPLING METHODS

Waste Material	Sampling Method	Sampling Equipment
Extremely viscous liquid or sludge	ASTM D140-70	Coliwasa, dipper, scoop, thief
Crushed or powdered material	ASTM D346-75	Scoop, shovel, tube sampler
Soil or rock-like material	ASTM D420-69	Scoop, shovel, auger
Soil-like material	ASTM D1452-65	Scoop, shovel, tube sampler
Fly ash-like material	ASTM D2234-76	Tube sampler, trier, auger, scoop, shovel
Containerized liquids	SW-846	Coliwasa, tube sampler, weighted bottle, dipper, thief

TABLE 4-4
SOME PARAMETERS AND METHODS FOR FULL CHARACTERIZATION

Parameters	Method Description	SW-846 Method
Volatile organics	GC-MS	8240
Semivolatile organics	GC-MS	8270
Pesticides and PCB's	GC-ECD	8080
Dioxins	GC-MS	8280
Total Metals	ICP/Graphite Furnace	3000/7000
Total and amenable cyanide	colorimetric	9010
Total Organic Halides (TOX)		9020
Extractable metals	extraction/ICP analysis	1311/6010
Extractable volatiles	extraction/TCLP volatiles	1311/8240
Extractable semivolatiles	extraction/TCLP BNA	1311/8270
Extractable pesticides and PCB's	extraction/GC-ECD	1311/8080

5.0 PROCEDURES TO PREVENT HAZARDS

This section provides information on the prevention of hazards to both the public and the environment. Specific procedures for implementing those safeguards will be developed during the construction phase of the project and prior to Facility operations. A number of the safeguard procedures will be directly determined by the final Facility layout and the requirements contained in the Facility permit. For this reason, many of the procedural aspects of this section are described in general terms rather than specific detail.

The engineered barriers for the mitigation of hazards discussed in this section are shown in design drawings contained in Volume III.

5.1 SECURITY PROCEDURES TO PREVENT HAZARDS

Security at the Facility will be provided by security guards, fences surrounding the Facility and warning signs. Each of these is described in the following sections.

5.1.1 Barrier and Means to Control Entrance

The Facility will be bounded by a barbed-wire fence. The active portion of the Facility (i.e. the processing area) will be bounded by an additional fence with two access gates located in the northern portion of the Facility. The northwest gate will remain locked at all times and will serve as a secondary or emergency entrance. Access into the Facility will be controlled by means of the primary gate, located in the northeast corner of the Facility. The gate will be fitted with a cattle guard to prevent livestock from entering the Facility. A security guard post will be located at this entrance gate and will be attended 24 hours a day. The fence, gates, and guard will provide adequate access control and will prevent unwitting entry of persons or livestock to the active portion of the Facility.

Visitors will be required to sign a visitors log prior to movement in or around the Facility. Each visitor will be issued a security badge, which will be worn while the visitor is onsite. The badge will be worn on the visitor's outermost garment in a clearly visible location above the waist. The security guard will be responsible for ensuring that all visitors comply with these requirements. Visitors will be escorted unless other arrangements are made with Facility personnel.

5.1.2 Warning Signs

Warning signs stating "Danger - Unauthorized Personnel Keep Out" will be posted at the site entrance and every 50 feet along the perimeter fence. The signs will be posted in English and Spanish and will be legible from a distance of at least 25 feet. If ignitable wastes are stored or treated in the area, a "No Smoking" sign will also be posted.

5.2 INSPECTION PROCEDURES

This section of the permit application provides written inspection guidelines and an inspection schedule for the Facility in accordance with 20 NMAC 4.1.

5.2.1 General Inspection Procedures

Facility personnel will conduct inspections of all equipment and structures as frequently as necessary to prevent, detect, or respond to environmental or human health hazards. Inspection records describing malfunctions, deteriorations, operator errors, and discharges that may cause or contribute to a release of hazardous waste constituents to the environment or that may be a threat to human health will be kept at the Facility administration building for three years from the date of the inspection. Specific inspection procedures are outlined in Sections 5.2.2 through 5.2.9.

Personnel will receive general training about hazardous waste inspections as part of the Facility hazardous waste training program. Personnel responsible for inspecting particular equipment or areas of the Facility will receive classroom and/or on-the-job training in inspection procedures. Inspection procedures will be described in the operating manual, which will be located in the EC's office.

Facility guards will make rounds of the Facility at least once daily to detect any unauthorized entry to the Facility or any other abnormalities. The guards will not use inspection checklists, but they will notify the EC and/or emergency response personnel of any spills or other emergencies. Requirements for the EC and/or emergency response personnel, subsequent to an inspection notification, are outlined in the Contingency Plan in Section 6.0.

5.2.1.1 Inspection Checklist

Inspection checklists and an inspection schedule will be developed to ensure that inspections occur at appropriate frequencies. Development of the required checklists and schedules will be completed prior to the initial receipt of waste. An inspection schedule matrix is provided in Table 5-1. This matrix will be expanded, as necessary, to reflect new equipment or changes to existing equipment inspection frequencies.

Inspection frequencies will vary according to the type and age of the equipment, the frequency of its use, and its importance in preventing environmental incidents. The inspection frequencies provided in Table 5-1 show that inspections will occur frequently so that problems can be identified in time to correct them before harm is done to human health or the environment.

The inspection checklists will identify the name of the inspector, date and time of the inspection, frequency of inspection, specific items to be checked, any notations or observations of abnormalities, and the nature and date of any corrective actions taken. Example checklists are provided in Appendix I, Volume II. The inspection schedules will be kept in the EC's office.

When new or modified equipment is installed or used at the Facility, the inspection procedures, forms, and schedule will be revised to reflect these changes.

5.2.1.2 Remedial Action

Facility personnel or contract personnel will remedy any deterioration or malfunction of equipment or structures encountered during inspections. The remedy will be completed in sufficient time to ensure that the problem does not result in an environmental or human health hazard.

All repairs to permitted portions of the Facility will be made in accordance with the original construction specifications and CQA plan.

If a hazardous or potentially hazardous condition is identified, the EC, as specified in the Contingency Plan (Section 6.0), will be notified immediately to assess the situation and determine how to correct the situation and whether the Contingency Plan should be implemented.

5.2.2 Landfill Inspection Procedures

Landfill liners and the cover will be inspected during and immediately after installation in accordance with the CQA Plan, which is discussed in Section 2.5.2.3.

The landfill and associated equipment will be inspected weekly and after storms unless otherwise specified. Records of the inspections will be maintained in the operating record, which will be kept in the administration building.

If deterioration or any other abnormalities are noted during inspection of the landfill or associated components, the inspector's supervisor will be notified and will determine the appropriate course of action for correction. If the supervisor is not available, the EC will be summoned to make the determination.

The landfill will be inspected by properly-trained personnel weekly and after storms for such items as spills, leaks, odors, wind-blown particulate matter, any evidence of deterioration of the landfill itself, and any malfunction or improper operation of the run-on/run-off control systems. All inspections will be documented on the landfill inspection checklist, described in Section 5.2.1.1 and found in Appendix I (Volume II) of the application. Inspection checklists will be kept for at least 3 years, in accordance with 40 CFR 264.15(d).

Vadose Zone Monitoring System

During the active life and during closure of the landfill, the LCRS and LDRS will be checked daily for the presence of liquid. The amount of water in the system can be used to determine if the system is functioning properly. The system will either be inspected through the cleanout pipe, which is connected to the primary collection pipe and the sump riser pipe, or with magnehelic gages or other liquid detection devices, if they are installed. The leachate collection tank will be inspected in accordance with the procedures outlined in Section 5.2.5.

During the operational phase of the landfill, periodic checks will be made within the landfill to detect the presence of hazardous gases and volatile organics. Surveys of the active landfill surface area and the riser pipes with an OVM or comparable device will be performed quarterly to detect the presence of organic compounds.

If it is evident that particulate matter from the landfill is subject to dispersal by the wind, the active portion of the landfill will either be covered or managed to control the dispersal (see Section 2.5.1.7). Adding water to prevent wind erosion will be limited so that ponding in the landfill does not occur. If the dispersion is noted during an inspection, the landfill supervisor will notify the sprayer truck operator to rectify the situation.

The stormwater collection and holding unit associated with the run-off/run-on control systems will be inspected to ensure that liquid has not accidentally accumulated. The collection system will be emptied as quickly as possible to ensure that the design capacity of the system is not exceeded.

5.2.3 Evaporation Pond Inspection Procedures

Evaporation pond liners will be inspected during and immediately after construction and installation in accordance with the CQA Plan, which is discussed in Section 2.5.2.3.

While the evaporation pond is in operation, it will be inspected daily to detect any sudden drops in the level of the pond's contents and to measure the volume of and remove any liquid that has accumulated in the leachate collection and leak detection sumps. The daily inspections will also serve to ensure that there is no potential for overtopping by wind or wave action. Since all discharges into the pond will be monitored, visual inspections will be adequate.

Other inspection items, such as condition of berms, warning signs, and surrounding area, will be checked weekly and after storms. Weekly visual inspections will also be conducted to verify the integrity of the liners and associated systems. Visible portions of the leachate collection pipes and pump will be visually inspected weekly for deterioration. The concrete pad for tanker discharge will be visually inspected weekly for accumulation of liquids. The area around the pond will be inspected weekly for any signs of deterioration, leaks, erosion, etc.

The evaporation pond berms will be inspected for any sign of abnormal deterioration, which may include excessive sloughing or the development of significant cracks. Such problems may indicate liner slippage.

A typical inspection checklist for the evaporation pond is provided in Appendix I, Volume II.

5.2.4 Container Storage Area Inspection Procedures

Weekly visual inspections of container storage areas will be performed to identify the status of warning signs, condition of containers and labels, availability and accessibility of spill control and PPE, and the adequacy of aisle space and access/egress routes. Containers will be inspected for any signs of excessive corrosion, buckles, dents, holes, other structural defects or deterioration, and over-pressurization. A typical inspection checklist for container areas is provided in Appendix I in Volume II.

If a container is found to be in poor condition, the inspector's supervisor will be notified, who will either arrange to transfer the hazardous waste to a new container, repair the existing container as specified by the manufacturer, or place the container in an overpack drum.

Containers used for storing liquids will be stored in a secondary containment area described in Section 2.2. These areas will be inspected weekly during the container storage area inspections. The inspections will focus on (1) the condition of sump pits and trenches to ensure that they are free of cracks or gaps and are sufficiently impervious to contain leaks, spills, and accumulated liquids until the collected material is detected and removed; (2) pump operation; and, (3) placement of containers to ensure that designed liquid flow paths are not obstructed. A record of the inspection will be maintained in the operating record, which will be kept in the administration building.

5.2.5 Tank Inspection Procedures

Tanks containing or treating waste will be inspected daily. These inspections will focus on the status of warning signs, the adequacy and availability of spill control and PPE, the adequacy of access routes, and the condition of the tanks, ancillary equipment, and monitoring and leak detection systems. The inspection will focus on (1) overfill control; (2) equipment condition to detect any signs of corrosion or releases of waste from the tanks or ancillary equipment; and, (3) data gathered from monitoring and leak detection equipment to ensure that the tank system is being operated in accordance with design specifications.

Secondary containment areas in which tanks are located will be inspected daily during the tank inspections. These inspections will focus on the condition of the containment surface to ensure that it is free of cracks or gaps and is sufficiently impervious to contain leaks, spills, or accumulated liquids until the collected material is detected and removed. Inspection records will be maintained in the Facility operating record, which will be kept in the administration building. A typical inspection checklist for tanks is provided in Appendix I in Volume II.

5.2.6 Stabilization Unit Inspection Procedures

Inspection of the stabilization unit will be conducted according to the procedures specified in Section 5.2.5. The inspections will be conducted on days when the unit is operating and daily when waste is in storage. Additional inspection requirements are described in Section 2.4.6.

Inspection records will be maintained in the administration building.

5.2.7 Security Equipment Inspection Procedures

Security inspections will be conducted regularly and will include the following elements:

- visual inspection of the warning signs at all approaches to the Facility to ensure that the signs are present, legible, and securely attached to the fence;
- inspection of the Facility perimeter to ensure the integrity of the fence and gate by looking for signs of erosion of soil at the fence posts and corrosion or vandalism to the fence, fence posts, or locks;
- inspection and replacement, as necessary, of lights for the purpose of illuminating the Facility at night;
- inspection of structures for signs of erosion, tampering, or vandalism; and,
- records of inspections will be maintained in the administration building.

5.2.8 Safety and Emergency Response Equipment Inspection Procedures

Safety and emergency response equipment inspections will occur monthly. This category of equipment includes first aid supplies; respiratory protection equipment (other than personally issued respirators, which will be each employee's responsibility); protective clothing, including hard hats, gloves, and suits; fire extinguishers; eye wash stations; safety showers; empty 55-gallon drums; shovels; and spill cleanup and decontamination kits.

A monthly inventory of safety-related supplies and equipment will be performed to ensure that the items are available, in good condition, and at designated locations. Inadequate or missing items will be replaced or repaired.

Fire protection equipment, including fire extinguishers and fire hoses, will be inspected monthly and after each use to ensure that the equipment is capable of functioning properly and that access to the equipment is not blocked. Each fire extinguisher will be inspected to ensure that the seal around the handle is intact, that the pressure gauge indicates that the unit is adequately charged, and that an Underwriter's Laboratory listing label is attached to each unit. Building sprinkler systems will be inspected according to manufacturer specifications. Chemical fire-suppression systems will be checked to ensure that adequate quantities of the chemical and water exist. The fire-suppression vehicles will also be tuned up at least annually and inspected monthly. Records of inspections will be maintained in the administration building for each unit.

The public address (PA) system will be tested daily to ensure proper operation. In lieu of daily testing, the Facility may opt to broadcast music 24 hours a day, which ensures proper operation of the unit at all times.

Hand-held radios will be tested prior to use each day and periodically throughout the day. The units will be recharged after each shift to ensure that they are operating properly.

5.2.9 Loading and Unloading Area Inspection Procedures

Waste loading and unloading areas will be inspected daily when in use. The inspections will focus on integrity of the containment structure and safety-related issues that could lead to hazards or waste spills.

Onsite roadways and vehicle traffic areas will be inspected on a preventive maintenance order (PMO) schedule to ensure that potential safety hazards, such as road surface deterioration, are minimized or avoided. Records of inspections will be maintained in the administration building for each unit.

5.3 PREPAREDNESS AND PREVENTION PROCEDURES

Preparedness and prevention encompass a wide range of proceduress, from communication to equipment to arrangements with local authorities. These procedures are discussed in the following sections.

5.3.1 Internal Communications

Internal communication will be established to meet the needs for each building and area at the Facility. Three forms of internal communication systems will be implemented; (1) a PA system will be used in the main buildings to alert employees of potential or actual emergencies; (2) in noisy or remote areas of the Facility, hand-held two-way radios will be used to communicate emergencies; (3) an audible fire alarm will be located in the permanent buildings. The alarm will be used to alert employees of fires but may also be used for alerting them to other emergencies in the event that the two other systems described above are malfunctioning. Periodic equipment tests will be conducted to assure that internal communication systems are functioning properly.

5.3.2 External Communications

A telephone will be available for operations that occur inside the main buildings. For outdoor processing areas without a telephone nearby, hand-held two-way radios capable of summoning emergency assistance from local police departments, fire departments, and state or local emergency response teams will be available.

A map identifying the location of telephones at the Facility will be provided to the NMED prior to acceptance of waste at the Facility.

5.3.3 Emergency Equipment

Emergency response equipment at the Facility includes fire extinguishers and other fire control equipment, spill cleanup kits, and decontamination kits. Each processing area regulated storage unit will be equipped with fire control and spill response equipment. Equipment in the stabilization unit will be used for the tank storage area and roll-off storage area because of their close proximity. A detailed description of this equipment, including the content and type, is included in Appendix M in Volume II and is discussed in the Contingency Plan contained in Section 6.0.

A complete list of the contents and location of the various types of kits will be maintained in the EC's office at the Facility.

5.3.4 Water for Fire Control

Permanent buildings at the Facility will be equipped with automatic sprinkler systems and fire extinguishers, as required by the National Fire Protection Association (NFPA) code. The sprinkler systems will be designed according to NFPA guidelines. Water to fight fires will be available in water truck(s). The truck(s) generally will be used for landfill emergencies.

5.3.5 Required Aisle Space

The aisle between double rows of containers in the drum handling unit will be 30 inches wide, and roll-off containers will be placed 4 feet apart and 4 feet from the edge of the berm. Such spacing will

allow for the unobstructed movement of personnel, fire protection equipment, spill control equipment, and decontamination equipment in the event of an emergency.

5.3.6 Arrangements with Local Authorities

The Facility will make arrangements with local authorities as described in the Contingency Plan (see Section 6.0).

5.4 PREVENTIVE PROCEDURES, STRUCTURES, AND EQUIPMENT

To prevent accidents at the Facility, all individuals responsible for material and waste handling will receive classroom and on-the-job instruction in safety awareness, recognition of potential hazards in the work place, environmental procedures and policies, and fire prevention and control procedures. Individuals who may come in contact with hazardous waste will receive Occupational Safety and Health Administration (OSHA) 40-hour training. These individuals also will be trained in the operation of the equipment and vehicles they will be using to perform their duties.

Safety meetings will be conducted as necessary to discuss safety issues, fire prevention and control, good housekeeping and any problems relating to specific areas of the site.

5.4.1 Loading, Unloading, and Waste Transfer Operations

To prevent accidents during loading, unloading, and waste transfer, hazardous waste will be handled only by those individuals who have been properly trained in correct handling procedures and proper spill response procedures. The emergency brakes of transport vehicles will be engaged and the wheels chocked during all loading and unloading operations. Inspection of loading and unloading areas is discussed in Section 5.2.9.

Waste containers will always remain closed during storage, except when it is necessary to add or remove waste (e.g. for sampling). This practice will minimize the potential for accidental releases of waste.

Wastes will be transferred in approved vehicles over approved routes and the maximum capacity of the truck will not be exceeded.

Ramps will be installed where necessary to enable fork lifts, dollies, or hand trucks to move into or out of secondary containment areas surrounded by berms or curbing.

Transferring waste from drums to tanks will be accomplished as expeditiously as possible to avoid having containers remain open for extended periods of time.

If ignitable wastes are handled, special precautions will be instituted, including the use of special non-sparking bung wrenches or other tools for opening drums or otherwise handling the waste containers, grounding waste containers during waste transfer, and other special handling requirements. These precautions, coupled with the procedures for management of ignitable waste contained in Section 2.0, will minimize the hazards associated with ignitable wastes.

5.4.2 Run-Off and Run-On

Run-off and run-on for the major units are described in the following sections.

5.4.2.1 Tank Storage, Container Storage, and Treatment Areas

Run-off and run-on will be prevented in container and tank storage areas and the stabilization unit through exterior drainage systems located at the perimeters of these areas, outside of the containment systems.

All containment areas associated with tanks or containers will be sloped to remove accumulated liquids caused by spills, leaks, or precipitation (for outdoor units). Liquids that accumulate in any secondary containment area will be sampled to determine if the liquid is hazardous waste. If the liquid is hazardous, the waste will be pumped to a drum or tank and handled accordingly. If the liquid is not contaminated, it will be discharged to the storm drainage system.

5.4.2.2 The Landfill and Evaporation pond

The landfill run-on control system will be capable of preventing flow onto the active portion of the landfill during peak discharge from at least a 24-hour, 25-year storm. The run-on control system will consist of unlined ditches for diverting run-on from off site around the landfill. Water from outside the landfill will be prevented from entering the active portion of the landfill by the waste processing corridor drainage ditch.

The run-off management system will be capable of collecting the water volume resulting from at least a 24-hour, 25-year storm. Run-off in the active portion of the landfill will be collected in the LCRS.

The run-on and run-off control system for the landfill is described in greater detail in Section 2.5.1.6.

The area surrounding the evaporation pond will be graded to carry stormwater run-off towards the drainage ditch to the south of the evaporation pond area. This ditch will ultimately empty into the site stormwater detention pond. The perimeter of the evaporation pond is elevated to prevent stormwater run-on into the pond from surrounding areas.

5.4.3 Wind Dispersal Control System

The active portion of the landfill will either be covered or managed to control the wind dispersal. In general, dust control will be accomplished by spraying water on the active portion of the landfill and any road or area subject to wind dispersal. Adding water to prevent wind erosion will be limited so that ponding in the landfill does not occur. Additional detail about wind dispersal procedures can be found in Section 2.5.1.7.

5.4.4 Water Supply Protection

The Facility will coordinate intended water use with the State Engineer's Office, Water Rights Division, and other appropriate agencies. The domestic water supply (via underground water line from a spring in the Ogallala formation located approximately one mile east of the Facility) will be protected by the following: (1) natural means because of its location; (2) the design of the landfill; (3) the type of waste that will be accepted at the Facility; and (4) the method of response to releases to soil. Each is discussed in more detail below.

Natural geologic and hydrologic conditions in the area include the following characteristics.

- the Upper Dockum unit is unsaturated beneath the selected site;
- the Lower Dockum consists of a 600-foot thickness of homogeneous, lacustrine mudstone. This sequence of unsaturated, low permeability mudstones represents a

geologic barrier to potential downward migration of contaminants from the landfill (see Section 3.0); and,

- the nearest surface water is the Pecos River, approximately 30 miles to the west of the Facility.

The landfill design includes removal of the 10-feet deep layer of alluvial material on the surface of the disposal site prior to construction of the cells, thus eliminating the possibility of hazardous constituents entering the alluvium and migrating away from the Facility.

Free liquid hazardous waste will be placed in the landfill only in accordance with 40 CFR 264.314(d). In addition, no non-hazardous liquid waste will be placed in the landfill. These limitations on the introduction of liquids into the landfill will minimize the generation of leachates and the potential for the migration of any hazardous constituents from the Facility.

Finally, any releases to the soil will be immediately cleaned up to prevent the spread of contamination. The Contingency Plan in Section 6.0 describes the equipment and personnel available to ensure prompt clean up of any spill.

5.4.5 Mitigation of Effects of Equipment Failure and Power Outages

The Facility will use a PMO schedule, based on manufacturer's recommendations for various pieces of equipment, to ensure proper operation of the equipment. In addition to the items replaced or changed as part of the PMO schedule, any item(s) found to be deficient during the PMO inspection will be replaced or repaired as soon as possible.

Spare parts critical to ensuring continuation of equipment and safety systems may be stored onsite to facilitate immediate repairs. Other items that require long ordering periods also may be stored onsite.

In the event of a power failure, at least one backup generator will be used for emergency backup power. The generator will be started within 30 minutes of a power failure.

On-the-job training will provide personnel with appropriate instruction in emergency response procedures so that proper actions will be taken in the event of equipment or power failure.

The emergency power system is described in Section 6.3.5.4 of the Contingency Plan.

5.4.6 Prevention of Undue Exposure of Personnel to Hazardous Waste

All employees will be trained in the safe operating practices to be used in handling hazardous wastes. All employees will wear steel-toed shoes and safety glasses while in processing or active areas of the landfill. In some cases, additional PPE will be required, such as hearing protection, respiratory protection, and protective clothing. Employees will be trained in, and responsible for, proper inspection and use of their respirator and proper use and care of PPE. If a defect is noted in any of the equipment, the employee will be responsible for replacing or repairing it prior to use, in accordance with the applicable training. As previously stated, PPE, other than respiratory protection, will be located at or near each permitted unit, along with spill response equipment.

Routine tasks will require some PPE, as outlined in the site Health and Safety (HAS) Plan. In many cases, these requirements will include safety glasses, steel-toed shoes, and hard hats. The site HAS plan will be prepared prior to commencement of hazardous waste operations. This plan will be kept at the Facility, but is not considered part of this permit application.

Out-of-the-ordinary hazardous waste activities will be evaluated by the site HAS officer or a member of an emergency response team prior to responding to the incident. After the type of contaminants present has been determined, the HAS officer or the EC will specify the respiratory protection and/or PPE requirements necessary to safely handle the incident. All respiratory protection devices will be maintained in compliance with OSHA requirements and will be issued only to qualified personnel who have received medical approval and training for the proper use of respiratory protection devices.

For emergencies that are beyond the scope of the Facility personnel training program, areas of the Facility or the entire Facility may be evacuated, at the direction of the EC. In such cases, professional emergency response personnel will be notified to respond to the emergency (see Section 6.0).

5.4.7 Special Requirements for Bulk and Containerized Liquids Disposed in Landfills

As previously stated, bulk or non-containerized liquids will not be disposed in the landfill. Containers holding free liquids will be placed in the landfill only if (1) all free-standing liquid has been removed by decanting or other methods, mixed with non-biodegradable sorbent, solidified so that free-standing liquid is no longer observed, or otherwise eliminated; (2) the container is very small; (3) the container is designed to hold free liquids for use other than storage (e.g., a battery); or (4) the container is a lab pack disposed in accordance with 40 CFR 264.316.

In the case of number (1) above, prior to placement in the landfill, the absence of free liquids will be verified using a paint filter test. In addition, this waste will be analyzed for other parameters based upon the characterization of the waste before solidification. These requirements are a part of the Waste Analysis Plan presented in Section 4.0.

5.4.8 Special Requirements to Limit Releases to the Atmosphere

Operations at the Facility will be conducted to minimize the potential for releases to the atmosphere as required by 40 CFR 270.14(b)(8)(vi). This objective will be achieved by using a wind dispersal control system to limit or eliminate the dispersal of particulate matter from the landfill, roadways, and other areas of the Facility and by providing control equipment for operations that may produce air emission, if necessary. A structural containment building housing the stabilization unit will be equipped with pollution control systems to minimize the release of particulates to the atmosphere. Procedures will be developed to ensure that the landfill and associated activities are managed to prevent particulate releases. The Contingency Plan will specify the methods to prevent and control spills and emissions related to spills. Regulations applicable to sources of air emissions from the Facility may be found in the New Mexico Air Quality Control regulations.

5.5 PRECAUTIONS TO PREVENT IGNITION OR REACTION OF IGNITABLE, REACTIVE, OR INCOMPATIBLE WASTES

Hazardous wastes will be handled only by properly trained Facility personnel. The Facility training program is outlined in Section 7.0. Individuals will be instructed in identifying incompatible wastes, properly labeling them, and properly handling them. Proper handling includes segregation, avoidance of mixing the wastes, and carefully checking compatibility codes prior to the storage or disposal of any wastes. Personnel also will be specifically trained in the proper handling of ignitable and reactive wastes.

This approach will ensure the proper handling of ignitable and reactive waste and will prevent mixing of incompatible waste. In addition, personnel training and Facility operational procedures will be developed to (1) ensure that wastes are properly identified; (2) ensure that general Facility requirements for the management of ignitable, reactive, and incompatible wastes are adequate; and (3) ensure that unit-specific requirements for the management of these wastes are compatible with operations. The procedures for identifying these wastes are provided in Section 4.3.

The local fire department or a qualified organization will inspect all of the permitted units on an annual basis to assure continued compliance with all applicable NFPA codes.

Ignitable and reactive waste handling are generally described in Section 5.5.1. More specific requirements for the landfill and stabilization unit are described in Section 5.5.2. Handling of incompatible waste is described in Section 5.5.3.

5.5.1 General Requirements

Precautions will be taken to avoid (1) accidental ignition or reaction of ignitable or reactive wastes; (2) reactions that generate extreme heat or pressure, fire or explosions, or violent reactions; (3) reactions that produce uncontrolled toxic or flammable fumes, dusts or gases, in quantities large enough to threaten human health and the environment; (4) reactions that cause damage to the structural integrity of the container or the unit; and (5) any other reactions that threaten human health or the environment.

Ignitable or reactive wastes accepted at the Facility will be separated and protected from any sources of ignition or reaction, including open flames, smoking, cutting and welding, hot surfaces, frictional heat, sparks, spontaneous ignition, and radiant heat. All smoking will be confined to specifically designated areas when ignitable or reactive wastes are being handled. "No Smoking" signs will be conspicuously posted wherever there is a hazard from ignitable or reactive waste. Ignitable or reactive wastes will be located in the active portion of the Facility, which is more than 50 feet from the Facility property line.

5.5.2 Requirements for the Landfill

Ignitable or reactive wastes will not be placed in the landfill unless the waste has been treated and no longer meets the definition of ignitable or reactive waste under 40 CFR 261.2 or 261.23, or unless the general requirements outlined above for ignitable, reactive, or incompatible wastes are complied with. Additional information for the management of these wastes in the landfill is contained in Section 2.5.3.6.

5.5.3 Incompatible Waste Handling

Generator waste profile forms (see Appendix H, Volume II) will provide Facility waste handlers with the necessary information to avoid mixing containers of incompatible wastes. Facility employees will be trained to recognize incompatible wastes and to prevent the mixing of such wastes. Incompatible wastes will not be placed in the same area of the landfill, but separated adequately to avoid all possibility of commingling in the landfill.

By the time any leachate generated from the landfill reaches the LCRS it will be sufficiently diluted, therefore, problems associated with incompatibles in the LCRS sump are not anticipated. Wastes will be solidified and stabilized prior to their placement into the landfill. These processes are performed to bind liquids and prevent leaching of any of the wastes' constituents. Therfore, any leachate generated within the landfill is not expected to contain significant levels of hazardous constituents. Due to the anticipated low concentrations of hazardous constituents in the leachate and the geographic separation of incompatible waste types, incompatibility problems within the landfill will be negligible.

Containers of incompatible wastes will be stored in separate containment areas to prevent the potential for mixing. The drum handling unit and storage area design incorporate the requirements for the separation of incompatible wastes. The physical barriers incorporated into the design, along with defined operational procedures, will ensure that incompatible wastes will remain segregated. In addition, the design and operational procedures will ensure that incompatible materials will not be

placed in the same container, nor will hazardous waste be placed in an unwashed container that previously held an incompatible waste (see Section 2.2.12).

TABLE 5-1
TRIASSIC PARK WASTE DISPOSAL FACILITY INSPECTION SCHEDULE

INSPECTION ITEM - PROBLEM OR PROBLEM AREA	INSPECTION TIME
Landfill	
Liner and cover systems - uniformity, damage and imperfections	During construction and installation
Liners and cover deterioration and malfunction	During and immediately after construction
Spills, leaks, odors, windblown particulate	Weekly
Run-on/run-off control system - uniformity, damage and imperfections	Weekly and after storms
LCRS/LDRS presence of liquid	Weekly and after storms
Leachate collection tank (while holding waste) for condition and proper function	Daily
Evaporation Pond	
Liners and cover systems for uniformity, damage, and imperfections	During construction and installation
Pond freeboard for level for changes	Weekly and after storms
Area surrounding pond	Weekly
LCRS/LDRS for presence of liquid	Weekly and after storms
Berms	Weekly
Container Storage Areas	
Condition of containers, signs, other safety equipment aisle space	Weekly
Secondary containment condition	Weekly
Tanks	
Condition of tanks, signs, other safety equipment, access routes, overfill control	Daily (when storing)
Secondary containment condition	Daily (when storing)
Stabilization Unit	
Condition of unit when in operation	Daily (when storing)
Condition of unit when empty	Monthly

6.0 CONTINGENCY PLAN

The purpose of the Contingency Plan is to minimize potential hazards to human health and/or the environment in the event of a fire, explosion, or unplanned sudden or non-sudden release of hazardous waste or hazardous waste constituents to the air, soil, or water. Should any of these unplanned events occur, the procedures in this Contingency Plan will be immediately implemented. When these procedures are followed, the possibility of additional occurrences, recurrences, or spread of the initial emergency in such a way as to require additional emergency response measures will be minimized.

This Contingency Plan was specifically developed for the Facility. The plan will be kept at the Facility, and controlled copies will be submitted to and updated at all police and fire departments, hospitals, and state and local emergency response organizations that may be called upon to provide emergency services. A list of these organizations is provided in Appendix J of Volume II.

The plan will specify Facility personnel who will be responsible for implementation of the plan. The plan will also specify the actions these individuals will take in the event of an emergency at the Facility. The plan will include a (1) description of the Facility layout; (2) the location of possible hazards; (3) the location of emergency and decontamination equipment; (4) evacuation plans and routes; (5) agreements with local emergency personnel; and, (6) an up-to-date list of names, addresses, and telephone numbers of Facility personnel qualified to act as EC.

6.1 GENERAL RESPONSIBILITIES OF THE EMERGENCY COORDINATOR

The Facility will train a minimum of five employees to serve as the EC for the Facility. Only one individual at a time will be designated as the primary (on-duty or on-call) EC. Others will be specified as alternate ECs. A list of personnel qualified as ECs will be provided in Appendix K in Volume II prior to waste receipt. Individuals will be listed by name, address, and telephone number. The list will also indicate the order in which each will assume responsibility as ECs. In accordance with 40 CFR 264.52(d), which states, "For new facilities, this information must be supplied to the Regional Administrator at the time of certification, rather than at the time of permit application", the list will be provided to the director of the NMED or designee (NMED Director) prior to receipt of waste and will be kept current both at the Facility and with emergency response organizations.

An acting EC will be either physically at the Facility or on call and in close proximity to the Facility 24 hours a day, 365 days a year. Each EC will have authority to commit resources needed to carry out the provisions of the Contingency Plan.

The EC will be responsible for implementing the Contingency Plan, coordinating all emergency response efforts, determining the extent of the emergency, assessing hazards to human health and the environment, and completing necessary reports associated with the incident. Each EC will be thoroughly familiar with (1) the Facility layout and operations; (2) all aspects of the Facility's Contingency Plan; (3) the location and characteristics of hazardous materials, hazardous waste, and waste handling activities at the Facility; (4) the location and operation of emergency response equipment; (5) evacuation plans and routes; and (6) the location of all Facility records.
After an emergency has been brought under control, the EC will assume responsibility for treating, storing, or disposing of recovered waste, contaminated soil or surface water, or any other material that is generated as a result of the release, fire, or explosion at the Facility.

If the EC becomes injured or is otherwise unable to serve as EC during an emergency, a designated operations manager will assume the role of EC until an alternate EC is notified and arrives on the scene.

6.2 CIRCUMSTANCES DICTATING IMPLEMENTATION OF THE PLAN

The Contingency Plan must be immediately implemented under any of the following circumstances:

- a fire or explosion occurs resulting in the release of a hazardous waste or involving an active hazardous waste management unit;
- a spill, leak, or other release of hazardous waste or hazardous waste constituents to the air, soil, or surface water occurs that could threaten human health or the environment;
- an indoor spill, leak, or other release of hazardous waste occurs to a secondary containment area that is not removed within 24 hours; and/or,
- a hazardous waste incident occurs resulting in an injury requiring more than basic first aid.

The plan may be implemented any time the EC believes that an event occurring at the Facility has the potential to adversely affect human health or the environment. The plan may also be implemented for other reasons at the discretion of the EC.

During the initial discovery and assessment phase of an incident, the EC will obtain information, including the type and quantity of released material and/or injuries that have occurred. At this time, the EC may consult with environmental specialists and other appropriate personnel to determine whether the incident warrants implementation of the RCRA Contingency Plan.

6.3 IMPLEMENTATION PROCEDURES

Response procedures for emergencies often vary significantly, depending on the specific details of the incident. However, several response procedures are common to all incidents and include the following elements, which are further detailed in this section:

- discovery of incident and request for assistance from emergency response personnel;
- identification and characterization of released or suspected released material;
- assessment of hazard;
- off site notification and evacuation criteria;
- response and control procedures;
- measures to prevent recurrence or spread; and,
- storage and treatment of released hazardous waste.

6.3.1 Discovery of Incident and Request for Assistance from Emergency Response Personnel

The individual who first discovers an incident or emergency will quickly determine whether the situation is immediately life threatening or non-life threatening. The steps taken in each of these scenarios are briefly described below, although they are likely to vary based on occurrence.

6.3.1.1 Life-Threatening Situations

All Facility employees will be instructed and trained on response to a life-threatening situation or life-threatening release of materials. Employees will first relocate to a safe area, if necessary, then immediately notify the EC and/or emergency response personnel as the situation warrants, using the methods described below.

Verbal— In some cases, verbal communication within a building or between buildings will be the fastest way to disseminate emergency information and/or evacuate the area of an emergency.

Telephone— Employees will be instructed to immediately relocate to a safe area, if necessary; appropriate emergency response personnel can be notified by dialing 911 (without first notifying the EC if a particular situation appears to be immediately life-threatening or serious); the EC must be immediately notified of the actions taken.

Fire-Pull Station— The fire-pull station may also be used to alert the fire department and Facility personnel of an emergency. Although this type of alarm does not allow verbal communication with the fire department, it does activate a local fire alarm bell at the Facility and a remote alarm signal at the fire department.

Facility personnel will be trained for initial response to onsite fires. When the alarm is activated, onsite personnel may use fire extinguishers or the application of soil and/or water to suppress fires, when appropriate. The Roswell Fire Department will respond to fires beyond the control of site personnel. Response time for the Roswell Fire Department is approximately 30-45 minutes.

Fire-pull stations will likely be located at the administration building, the entrance to the landfill, the drum handling unit, and the stabilization unit. Other possible locations of fire-pull stations may be established.

Automatic Fire Detection/Sprinkler System— All permanent Facility buildings will be equipped with automatic fire detection/sprinkler systems, which, when activated, will transmit an alarm directly to the security gate guard shack and the Roswell Fire Department. The fire department will immediately respond to any alarms.

PA Or Paging System— Each of the main buildings will be equipped with a PA or paging system, which will be used to inform employees of adverse conditions at the site and emergency response instructions.

Hand-Held Radios— Hand-held radios will be used to communicate with personnel who are out of voice communication or PA or are working in areas with noise levels such that render the PA system inaudible in emergency situations.

During non-operational hours, the EC will be notified by pager, radio, cellular telephone, or regular telephone. The EC will be at the scene as soon as possible to direct and coordinate emergency response activities.

If the EC determines that additional assistance from an off site agency or emergency response organization is needed or if immediate action is required to protect a local community population or to protect any visitors using the Mescalero Sands recreation complex and travelers at the rest stop on Highway 380 north of the Facility, the EC will contact the appropriate agencies or organizations. A list of these organizations is provided in Appendix J in Volume II. During response activities, two-way radios will be used for communication between responding groups and the EC.

6.3.1.2 Non-Life Threatening Situations

Upon discovery of a non-life-threatening release of materials or other non-life-threatening but potentially serious emergency situation, all Facility employees will be instructed and trained to immediately notify the EC or their supervisor. The EC will evaluate the situation, notify appropriate personnel, and if necessary implement the Contingency Plan.

6.3.2 Identification and Characterization of Released or Suspected Released Material

After the emergency situation has been discovered and appropriate response personnel have been contacted for assistance, the EC will immediately obtain the following information by process knowledge (his own or that of another employee): (1) observation; (2) review of Facility records, including material safety data sheets (MSDSs) and manifests; and/or, (3) chemical analysis of the material, if this becomes necessary. The chemical analysis will determine the following:

- the character and amount of released waste;
- the exact source and extent of any released material;
- whether the release could move off site; if it is determined that the release could move off site, the EC must determine if any containment procedures have been implemented or whether such procedures should be implemented; and,
- any injuries resulting from the incident.

All containers of waste and material at the Facility will be labeled. Therefore, the identification and characterization work generally will be accomplished through visual inspection and process knowledge. Manifests and lists of the waste and locations of waste being stored at the Facility prior to disposal or treatment will be maintained at the Facility. This information will be used in lieu of the visual inspection noted above in cases where the danger of entering the incident area is high or the container labels have been obscured as a result of the incident.

Copies of the MSDSs for raw materials used at the site will be located in the administration building, in the EC's office, and at various operations locations throughout the site. The information in these documents will be used to prepare a course of action.

6.3.3 Assessment of Hazard

Concurrent with the waste identification and characterization phase of the emergency response, the EC will assess possible hazards to human health or the environment that may result from the emergency situation. Indirect and direct effects of the release, fire, or explosion will be considered during this assessment. Examples of direct and indirect effects include the impacts of any toxic, irritating, or asphyxiating gases that are generated or the effects of any hazardous surface water run-off from water or chemical agents used to control a fire.

During this phase of the emergency response, the EC will consider the following information to determine potential risk to human health or the environment:

- the location from which the material or waste is emanating;
- the weather patterns and wind direction at the time of the release; and,

- the characteristics of the released material, including physical, reactive, and human or animal toxicity.

The EC may choose to obtain emergency response guidance by contacting one or more of the emergency response organizations listed in Appendix J (Volume II) or by utilizing various spill control reference textbooks and MSDSs located in the EC's office.

6.3.4 Off site Notification and Evacuation Criteria

If the EC determines that a release, fire, or explosion has occurred at the Facility that poses an immediate threat to onsite or off site human health and/or the environment, the findings will be reported to appropriate response personnel as follows:

- local authorities will be immediately notified if an emergency incident at the Facility could affect local areas and if evacuation of these areas is necessary. The EC will be available to assist appropriate officials in deciding whether local areas should be evacuated (evacuation plans are provided in Appendix L, Volume II); and,

- the on-scene coordinator for the geographical area will be notified with the following information:

  - ◊ the name and telephone number of the reporter;
  - ◊ the name and address of the Facility;
  - ◊ the time and type of incident that occurred;
  - ◊ the name and quantity of material(s) involved, to the extent that this is known;
  - ◊ the extent of injuries, if any; and,
  - ◊ the possible hazards to human health or the environment outside the Facility.

Coordinating agreements will be signed with federal, state, and local emergency response organizations. The agencies with which the Facility will enter these agreements are listed in Appendix J presented in Volume II. The agreements outline the conditions under which the agencies will be contacted and the roles they will assume during various emergency scenarios at the Facility. The agreements establish the EC as the lead coordinator of all emergency response activities at the Facility. The details of these agreements will be located in the EC's office and with each of the participating organizations. The agreements will be considered controlled documents and will be kept current by updating all copies each time a change is made. This ensures a coordinated response to all emergency situations.

The EC may contact one or more of the agencies, such as police, fire departments, or hospitals, as listed in Appendix J (Volume II), if additional assistance is needed at the site to protect community populations.

6.3.5 Response and Control Procedures

Following proper notification of agencies and/or evacuation of the Facility, the EC will initiate response and control procedures. This effort will involve the use of emergency equipment, which is listed in Appendix M in Volume II. This list also includes equipment descriptions and locations.

Potential incidents for which response and control procedures are necessary will be grouped into three broad categories: (1) fires and/or explosions; (2) spills, leaks, or other releases; and (3) power failures. A brief discussion of emergency training requirements and the general procedures for handling each of these situations are described in the following sections.

Facility personnel and supervisors will receive safety training to enable them to respond to and handle various emergency situations that are not of a serious nature. In addition to this training, employees will participate in emergency response drills on a periodic basis. These drills will involve both internal responses and those response actions taken in conjunction with external emergency response personnel. Key personnel will be familiar with the use of emergency equipment and fire control structures available to prevent the spread of fires in their areas. To prevent recurrence of an incident, any faulty or defective monitoring equipment, valves, pumps, alarms, or other equipment will be repaired. If repair is not possible, the equipment will be replaced. The unit will not receive hazardous waste until the minimum required equipment for safe operation is fully functional.

Procedures for ensuring that incompatible wastes are not treated, stored, or located in areas where a spill has occurred are addressed in Section 6.3.7.

6.3.5.1 Fire and/or Explosion Control Procedure

If a fire or explosion occurs at the Facility that may impact an active hazardous waste management unit or hazardous material storage area, the Contingency Plan will be immediately implemented, as outlined in Section 6.3. The EC will assess the situation and direct the emergency response effort. The EC will also be responsible for advising emergency response personnel of the hazards associated with released materials and other areas that should be protected from the effects of the incident.

In the event that a fire cannot be brought immediately under control and hazardous waste or material are located in the path of the fire or in an otherwise dangerous place, the waste or materials will be relocated to a safer area, if possible. If this is not possible, the material may be sprayed with an appropriate fire suppressant, at the direction of the EC or under the advisement of fire department personnel.

If an explosion is likely to occur, for example because a fire threatens to envelop ignitable waste, the EC may choose to evacuate the area, as described in Appendix L presented in Volume II.

Facility employees will be trained and advised to stay in their work areas during emergency situations, unless they are in immediate danger, until they receive further direction via the PA system or other method of communication. If evacuation is necessary, the EC will communicate this via the PA system and by other means, as necessary, and all employees will assemble at the administration building. If anyone is unaccounted for, emergency response personnel will conduct searches.

After the Facility has been evacuated, re-entry will be authorized by the EC only after the fire has been extinguished and when the emergency has been resolved.

Any equipment used during the incident will be checked for contamination and cleaned and/or replaced prior to resumption of plant operations in the affected area. Any solutions or materials used to decontaminate the equipment will be managed as RCRA-regulated waste.

6.3.5.2 Spills, Leaks, or Other Releases Control Procedure

All areas in which liquids are stored, managed, or potentially encountered (including tanks, containers, or secondary containment areas) will be inspected regularly for leaks, spills, deterioration, or damage in order to reduce the likelihood of an incident. However, on occasion, such incidents may still occur. This section describes the procedures for responding to spills, leaks, or other releases to containment areas or to the environment.

If Facility employees observe a spill, leak, or other release, whether during a formal inspection or during routine work, they will be instructed to contact the EC immediately and describe the situation in as much detail as possible, giving the following information, at a minimum:

- the location;
- material composition;
- approximate quantity; and,
- estimated extent of the release.

Based on this information (and additional investigation by the EC as necessary), the EC will determine whether to evacuate the area and/or implement the Contingency Plan.

As previously stated, if the EC is not available and if the situation is serious or life-threatening, employees will be instructed to dial 911 for emergency assistance. In a life threatening situation personnel may call 911 without first notifying the EC. The EC will then be notified of the employee's actions. Upon notification, the EC will conduct a visual inspection of the release and will then implement immediate containment measures.

Releases Within Containment

The EC will implement the following procedures for responding to leaks or spills from tank systems or containers into secondary containment areas that are not likely to reach the environment:

- the tank system or secondary containment area will be removed from service and the flow of waste stopped;
- the unit will be inspected to determine the apparent cause of the leak or spill;
- all waste released to a secondary containment area will be removed from the secondary containment systems within 24 hours after detection of the leak, or as timely as possible, to prevent harm to human health and the environment;
- leaking containers will be placed in an overpack drum or will have the contents transferred to another container; and,
- affected tank systems will be repaired or replaced (if replaced, the old systems will be closed) prior to returning them to service. All released materials will be removed prior to returning the unit(s) to service.

Releases to the Environment

The EC will implement the following procedures for responding to leaks or spills from units that are likely to reach the environment:

- as previously stated, if uncontrolled releases of ignitable, corrosive, reactive, or toxic materials are involved in the incident, the affected area will be evacuated;

- response personnel will be directed to the incident location to aid in preventing further migration of the leak or spill to soils or surface water, provided that this can be accomplished safely. This effort will involve the use of industrial absorbents, sorbent dams, or other similar materials. If the release is determined to be beyond the capabilities of Facility personnel, the EC will contact one of the emergency response organizations listed in Appendix J (Volume II) for assistance;

- the EC will monitor the status of the incident and direct emergency response personnel until the emergency condition no longer exists;

- when the incident has been brought under control, the EC will coordinate and instruct response personnel to begin cleanup and decontamination operations. These will involve containing and collecting any released material, including liquid releases, contaminated sorbent materials, visibly contaminated soils, and any other waste materials generated during cleanup or decontamination. These items will be removed and properly disposed of, generally by placing the wastes into DOT-approved containers (such as 55-gallon drums), sampling the waste or otherwise determining its constituents, and handling the waste accordingly. All liquids, including the originally released material and any liquids generated during cleanup (unless other circumstances or knowledge preclude this effort) will be pumped into drums and samples taken and analyzed to determine an appropriate course of action;

- if soils or surface water are visibly affected, they will be removed until the contaminant concentration in the remaining soil or water is at or below appropriate levels for the contaminants of concern; see CA section closure performance standard / cleanup standard.

- the EC will then use whatever means are necessary to determine if the released material is a hazardous substance as defined in 40 CFR 302. The EC will then determine whether the amount of released material is a reportable quantity. If the amount is a reportable quantity, the following steps will be taken:

    - ◊ waste that could be released to the environment because of a leak in a tank system will be removed from the tank within 24 hours of the detection of the leak, or, if this is not possible (impracticability must be demonstrated to the NMED), it will be removed at the earliest practicable time. In such a case, as much waste as is necessary to prevent further releases to the environment will be removed from the tank system, enabling inspection and repair of the system;

    - ◊ the EC will report the release to the NMED Director within 24 hours of detection;

    - ◊ the National Response Center will be advised of the situation within 24 hours of the incident;

◊ an internal report describing the situation and corrective measures necessary to prevent a recurrence will be prepared; and,

◊ a written report will be filed with the NMED Director within 30 days of detection, as described in Section 6.4.2 and

- if the quantity of the spill or leak is less than or equal to 1 pound and is immediately contained and cleaned up or is less than a reportable quantity of material, a Facility employee will be assigned to report on the situation and determine what, if any, follow-up actions are necessary after cleanup.

6.3.5.3 Evaporation Pond Failure Control Procedure

The evaporation pond will be removed from service if the level of liquids in the pond suddenly drops and the drop cannot be attributed to known flowrate changes into or out of the pond. The major source of volume reduction from the pond is anticipated to result from evaporation. Liquid may also be pumped out of the pond, for example if a heavy rainfall event causes the water level to rise above the required freeboard elevation. Liquid levels in the evaporation pond will be monitored using a measuring staff gauged either in inches or in tenths of a foot. Daily evaporation losses will be compared to daily evaporation rates obtained from the nearest NOAA weather station. Currently this is the Bitter Lakes Wildlife Refuge station, as evaporation rates are not measured at the Roswell and Tatum stations. If liquid losses exceed daily evaporation losses and no other reasonable explanation is found, then the evaporation pond will be shut down and the authorities at NMED will be notified immediately.

When a pond must be removed from service, the following steps will be taken:

- the flow of waste into the pond will be immediately shut off;
- any surface leakage that has occurred will be contained;
- the leak will be stopped as soon as possible;
- any other necessary steps will be taken to stop or prevent a catastrophic failure of the unit; and,
- in the event that the leak cannot be stopped by any other means, the pond will be emptied.

Several options are available to empty a evaporation pond. These include setting up temporary double-lined embankments, temporary double-lined bladders, temporary portable double-lined tanks, or using tanker trucks. These short-term storage measures are intended only to allow storage capacity during a major pond repair effort. The Facility will request an emergency permit under 40 CFR 270.61 for storage of wastes onsite in temporary tanks. The wastes would be transferred into and out of the tanks using existing or temporary pumps.

- Notification will be made to the Chief of the Hazardous and Radioactive Materials Bureau. An oral report will be made within 24 hours. A written report will be submitted within 7 days. An unexplained drop in the level of the evaporation pond would qualify as a noncompliance that may endanger human health or the environment, and 40 CFR 170.30 (l)(6) requires 24-hour notification for such events.

A written procedure for complying with the objectives stated above will be prepared prior to the acceptance of waste at the Facility. This procedure will be written to ensure that all repairs will be made in accordance with approved designs, specifications, and CQA Plan for the pond. All repairs will be done under the supervision of a New Mexico registered professional engineer.

If the evaporation pond is removed from service, it will not be put back into service until it is repaired. If the unit was removed from service as a result of a sudden drop in the liquid level, and the drop in the liquid level was caused by failure of the liner, then either a new liner (in compliance with 264.221[a]) must be installed, or the old liner must be repaired and certified by a qualified engineer that it meets the design specifications approved in the permit. If the pond is not to be repaired, or is not repairable, it will be closed in accordance with the provisions of 264.228 and the approved closure plan.

In the event that the evaporation pond is removed from service due to actual or imminent failure of any portion of the pond dike system, the evaporation pond will not be placed back in service until necessary repairs are completed and inspected, and the structural integrity of the dike is recertified by a New Mexico registered professional engineer. This recertification process will be done in accordance with 40 CFR 226(c) and 40 CFR 227(d)(1).

6.3.5.4 Power or Equipment Failure Control Procedure

The Facility will be equipped with at least one backup generator for emergency power generation to critical equipment only, which may include laboratory and administrative equipment. The generators may also be used to power safety equipment, such as smoke detectors and tank emergency cut-off or bypass mechanisms. The details of this system will be made available as the Facility design is completed. This emergency system will be started within 30 minutes of a power failure.

In the event of a power failure, all waste processing equipment will be shut down and all waste transfer and management activities will cease until power is restored.

Equipment that fails but does not result in an emergency incident, such as a fire or explosion, will be promptly repaired or replaced. If emergencies arise as a result of the equipment failure, they will be handled as described in previous sections.

6.3.6 Measures to Prevent Recurrence or Spread

During an emergency, the EC will take all reasonable measures necessary to ensure that fires, explosions, and releases do not occur, recur, or spread to other hazardous waste areas at the Facility. These measures will include the following, where applicable:

- stopping processes and operations in specific areas of the plant or the entire plant itself; shut-down procedures for processing operations will be maintained in the administration building as well as at specific operating locations;
- collecting and containing released waste as described in Section 6.3.5.2; and,
- removing or isolating containers from the emergency at hand, as described in Section 6.3.5.1; if a material cannot be moved because of danger associated with a fire, the material may be sprayed with an appropriate fire suppressant, as directed by the EC or authorized fire official.

If the Facility ceases operations because of an emergency, the EC or a designated individual will monitor for leaks, pressure buildup, gas generation, or ruptures in valves, pipes, or other equipment, wherever this is appropriate.

To prevent an incident from occurring, a preventive maintenance order schedule will be prepared to ensure that monitoring equipment, valves, pumps, alarms, and other equipment will be maintained in good working order. If any of the equipment is found to be faulty or defective, it will be repaired or replaced.

6.3.7 Storage and Treatment of Released Hazardous Waste

Concurrently or immediately after the emergency has been addressed and cleanup procedures have been completed, the EC will make arrangements for the containerization and storage, treatment, or disposal of any waste generated during the incident. The waste will be assumed to be RCRA-regulated until process knowledge or sampling and analysis can be used to determine the actual nature of the waste. Sampling and analysis will be accomplished in accordance with the Waste Analysis Plan in Section 4.0. The material will be placed in DOT-approved containers and stored as RCRA-regulated waste until a determination is made. If the waste is determined to be RCRA-regulated, it will be labeled and stored accordingly until it is treated or disposed of in accordance with applicable RCRA regulations and permit conditions.

If the waste generated during the cleanup is determined to be incompatible with other wastes stored or treated at the Facility, the incompatible waste will be labeled as such and physically separated from incompatible waste. In addition, existing waste at the Facility that may be incompatible with the waste generated during cleanup will not be treated, stored, or disposed of until cleanup activities are completed and the cleanup waste is safely containerized and segregated from the existing waste.

6.4 POST-IMPLEMENTATION PROCEDURES

Following implementation of the Contingency Plan and resolution of the incident, all emergency equipment used during the effort will be made ready for future use. Necessary reports will be prepared and filed at the Facility and with regulatory agencies. These post-implementation procedures are detailed in the following sections.

6.4.1 Post-Emergency Equipment Maintenance

All emergency equipment listed in Appendix M (Volume II) of this Contingency Plan will be cleaned, repaired, or replaced so that it is fit to use before plant operations in the affected area are resumed. If the equipment cannot be adequately cleaned, it will be disposed of as hazardous waste. If it cannot be repaired and is not contaminated, it will be disposed of as non-hazardous waste.

Documentation of post-emergency equipment maintenance will be provided to NMED prior to resumption of operations in the affected area of the plant.

6.4.2 Required Reports and Notification

During and after certain emergency situations, as described in previous sections of this plan, specific types of reports or notification will be required. The EC will determine when, or if, off site notification and reporting are required for certain scenarios. The various reporting and notification requirements are mentioned in the appropriate sections of the Contingency Plan but are detailed here for purposes of clarity.

After the plan has been implemented, if the EC determines that the Facility has had a release, fire, or explosion that could threaten human health or the environment outside the Facility, the EC must immediately notify either the government official designated as the on-scene coordinator for the geographical area or the National Response Center. The report must include the following information: (1) the name and telephone number of the reporter; (2) the time and type of incident; (3) the name and quantity of material(s) involved, to the extent that this information is known; (4) the

extent of injuries, if any; and (5) the possible hazards to human health, or the environment, outside the Facility.

If the EC determines that evacuation of local areas may be advisable, appropriate local authorities will be immediately notified. The EC must be available to help appropriate officials decide whether local areas should be evacuated.

Any release to the environment which threatens human health or the environment must be reported to the NMED Director within 24 hours of detection. If the release is reported pursuant to 40 CFR Part 302, that report will satisfy this requirement. Any release involving a reportable quantity of a hazardous waste as defined in 40 CFR 302.4 will be reported to the National Response Center within 24 hours.

Within 24 hours of implementing the Contingency Plan, the EC must notify NMED. The owner or operator must note in the operating record the time, date, and details of any incident that requires implementation of the Contingency Plan.

As required by 40 CFR 264.56(j), within 15 days of the incident, the EC must submit to the NMED Director a written report on the incident. The report must include the following information: (1) the name, address, and telephone number of the owner or operator; (2) the name, address, and telephone number of the Facility; (3) the date, time, and type of incident; (4) the source and cause of any release to the environment; (5) the name and quantity of material(s) involved; (6) actions taken to mitigate damage due to the release; (7) the extent of injuries, if any; (8) an assessment of actual or potential hazards to human health or the environment, where this is applicable; and (9) the estimated quantity and disposition of recovered material that resulted from the incident.

Within 30 days of detection of a release to the environment, a report containing the following information will be submitted to the NMED Director: (1) the likely route of migration of the release; (2) the characteristics of the surrounding soil (soil composition, geology, hydrogeology, climate); (3) the results of any monitoring or sampling conducted in connection with the release, if available (if sampling or monitoring data relating to the release are not available within 30 days, these data must be submitted to the NMED Director as soon as they become available); (4) the proximity of the incident to downgradient drinking water, surface water, and populated areas; and (5) a description of response actions that were taken or are planned.

The NMED Director and state and local authorities will be notified when the Facility is in compliance with 40 CFR 264.56(h), which states that no waste that is incompatible with the released material can be treated, stored, or disposed until cleanup procedures are completed, and all equipment must be fit for its intended use prior to resuming operations.

6.5 DOCUMENTS TO BE MAINTAINED ONSITE AS PART OF THE PERMIT

Following the resolution of emergencies, various documents must be prepared and maintained onsite as part of the operating record. These documents are discussed in previous sections of this plan and are summarized below.

Copies of the Facility- and building-specific evacuation plans will be maintained in the administration building and at each location for which evacuation plans will be prepared. These documents will be submitted to the NMED within 30 days of the effective date of this permit.

An up-to-date list of all satellite and 90-day accumulation areas, if any are utilized at the Facility, will be maintained at the Facility and provided to the NMED inspectors upon request. Prior to accepting waste at a satellite or 90-day accumulation area for the first time, NMED will be provided with a description and location map.

A list of authorized ECs and their home telephone numbers will be maintained in the administration building, in all other buildings and emergency stations at the site, and in all controlled copies of the Contingency Plan.

A list of coordinating agreements that outline the situations and criteria under which outside help is needed will be maintained in the administration building and in all controlled copies of the Contingency Plan. This list will include the role of each emergency response authority in an emergency.

Coordinating Agreements will be put in place with local, state, and federal agencies for responding to emergency incidents that may occur at the Facility. It is proposed that, as allowed in 40 CFR 270.14(a), the Facility will formalize Coordinating Agreements with those organizations listed in Appendix J (see Volume II) when a definitive time frame has been established by NMED for permit issuance. It is believed that formalizing these agreements will be premature until the Facility design has been approved by NMED and until permit conditions have been fully defined.

A current evacuation plan will be maintained in the EC's office. Appendix L presented in Volume II provides a general Evacuation Plan for the Facility. It is proposed that, as allowed in 40 CFR 270.14(a), the Facility will finalize this Evacuation Plan with details of building-specific evacuations after the Facility design has received final approval from NMED. It is proposed that the Facility will submit the criteria for determining when site evacuations are necessary within 30 days of the effective date of the permit and that final evacuation plans and procedures be submitted following final NMED approval of the Facility design.

A current version of the emergency and spill response equipment list presented in Appendix M (Volume II) will be maintained in the EC's office and in each of the controlled copies of the Contingency Plan.

6.6 AMENDMENT OF CONTINGENCY PLAN

If the Contingency Plan is implemented, the circumstances under which it was implemented will be thoroughly reviewed to investigate the following:

- why the incident occurred and the cause for the occurrence;
- what measures were taken to prevent a recurrence; and,
- what measures will be taken to reduce the risk of having a similar occurrence in the future.

The Contingency Plan itself will be reviewed by the EC and/or the Facility owner and immediately amended, if necessary, whenever any of the following events occur:

- the Facility permit is revised;
- the plan fails in an emergency;
- changes occur to the Facility design, construction, operation, maintenance, or other circumstance that materially increase the potential for fires, explosions, or releases of hazardous waste or hazardous waste constituents, or that change the response necessary in an emergency;
- the list of ECs changes; or,

- the list of emergency equipment changes.

Because the Contingency Plan is a controlled document, any changes will be made in the following manner: (1) inaccurate or out-of-date pages will be directly replaced with new pages containing the modified or additional information; (2) the corrected pages will be issued to all agencies and organizations that have controlled copies of the plan; and, (3) old pages will be removed from copies of the plan and discarded. These steps will ensure that each organization has a current version of the plan.

7.0 PERSONNEL TRAINING

The personnel training program for the Facility. will be developed in accordance with 40 CFR 264.16 as adopted by the State of New Mexico in the New Mexico Hazardous Waste Management Regulations, Part V. This plan documents training procedures to be used by the Facility for all new employees and refresher training for experienced workers to ensure that all employees perform their work in full compliance with 40 CFR 264.16.

As illustrated in Figure 7-1, personnel will be divided into three categories for the purposes of the RCRA training: Facility personnel, visitors, and off site emergency response personnel. Facility personnel will be further categorized based on whether or not they will handle hazardous waste. Personnel will receive training appropriate to their specific job responsibilities. All Facility personnel will be required to complete classroom training annually. Employees who will handle hazardous waste and supervisors of employees who will handle hazardous waste will be required to complete on-the-job training (OJT) and OSHA 40-hour training and annual refreshers. Employees assigned to the Facility will not be allowed to work without direct supervision until completing the training program relevant to the positions in which they are employed. New personnel will be required to complete their training program as soon as practicable following their effective date of employment at the Facility.

Section 7.1 describes job titles, qualifications, and duties; Section 7.2 describes training content and frequency; and Section 7.3 describes record keeping procedures.

7.1 JOB TITLES AND DUTIES

To facilitate safe and effective Facility operation, the training program is designed to provide training commensurate with job responsibilities. A list of qualifications, duties, and special training required for appropriate personnel will be developed and maintained onsite prior to commencement of operations. This section includes a description of the qualifications and responsibilities of the RCRA training officer, the EC, waste handlers, the site security officer, laboratory specialists, and maintenance personnel. Although other categories of personnel may work at the site, these six categories include key personnel with respect to ensuring safety and compliance and therefore are included in this section. It is important to note that one person may fulfill the responsibilities of more than one of the job categories outlined below.

7.1.1 RCRA Training Officer

The RCRA training officer will be responsible for developing and implementing a RCRA training program that is in compliance with 40 CFR 264.16, Personnel Training.

The RCRA training officer will possess the following qualifications:

- a four-year science or engineering degree or sufficient experience in hazardous waste management to oversee the training program;
- working knowledge of the New Mexico Hazardous Waste Act and the New Mexico Hazardous Waste Management Regulations;
- knowledge of site-specific hazardous waste management procedures;
- a thorough understanding of the purpose of the Contingency Plan and emergency procedures and the ability to implement them; and,

- 40-hour OSHA and annual refresher training.

The RCRA training officer will have the following responsibilities:

- developing and implementing the RCRA training program, including classroom training development and revision;
- establishing course curricula;
- conducting training;
- maintaining and updating, as needed, a list of all employees requiring training; this list will provide a personalized training history for each employee, which includes job title, training schedule, course attendance, and test results;
- reviewing any new job classifications to determine if OJT is required (supervisors may also request that employees receive OJT);
- scheduling training;
- ensuring that all personnel with RCRA responsibilities are trained as soon as practicable following the effective date in a position and are annually updated; and,
- conducting an annual review to determine which personnel require OJT.

7.1.2 Emergency Coordinator

The EC will coordinate all emergency response activities and will have the authority to commit the resources necessary to implement the Contingency Plan contained in Section 6.0. The Facility will appoint a primary EC as well as secondary ECs to ensure that someone is always available to serve as the EC. The secondary ECs must meet the same qualifications and responsibilities, outlined below, as the primary coordinator.

The EC will possess the following qualifications:

- a four-year science or engineering degree or sufficient experience in hazardous waste management and emergency response to coordinate all aspects of emergency response;
- working knowledge of the New Mexico Hazardous Waste Act and the New Mexico Hazardous Waste Regulations;
- familiarity with all aspects of the Contingency Plan and emergency procedures, all operations and activities at the Facility, the location and characteristics of waste handled, the location of records within the Facility, and the Facility layout prior to acting as EC; and,
- 40-hour OSHA training, annual refreshers, and OSHA supervisor training.

The EC will have the following responsibilities:

- either being on the Facility premises or being available to respond to an emergency by reaching the Facility within a short period of time;
- notifying all appropriate Facility personnel upon awareness of an emergency situation;

- notifying all appropriate state or local agencies with designated response roles;
- identifying the character, exact source, amount, and extent of any released materials;
- assessing possible hazards to human health and the environment that may result from a release, fire, or explosion;
- notifying local authorities if a release, fire, or explosion has occurred that could threaten human health or the environment;
- notifying the National Response Center if a release, fire, or explosion occurs that could threaten human health or the environment;
- taking all reasonable measures during an emergency to ensure that fires, explosions, and releases do not occur, recur, or spread to other hazardous waste at the Facility;
- if appropriate, when the Facility ceases operations in response to a release, fire, or explosion, monitoring for leaks, pressure build-up, gas generation, or ruptures in equipment;
- providing for the treating, storing, or disposing of recovered waste, contaminated soil or surface water, or any other material that results from a release, fire, or explosion at the Facility;
- ensuring that no waste that may be incompatible with the released material is treated, stored, or disposed until cleanup procedures are completed and that emergency equipment is cleaned and fit for its intended use prior to resumption of operations;
- notifying NMED and appropriate local authorities before operations are resumed;
- noting in the operating record the time, date, and details of any incident that requires implementing the Contingency Plan; and,
- submitting a written report to the NMED within 15 days of implementing the Contingency Plan.

7.1.3 Waste Handlers

Waste handlers will perform sampling, screening, unloading, transfer, storage, and loading of material.

The waste handlers will possess the following qualifications:

- high school diploma or equivalent; and,
- two years of experience in hazardous waste operations.

The waste handlers will have the following responsibilities:

- verifying waste received;
- testing emergency equipment;

- inspecting Facility and emergency equipment;
- managing containers in such a way as to prevent leaks, spills, and ruptures;
- inspecting container storage areas, tanks, the evaporation pond, and the landfill;
- maintaining run-off management system, control wind dispersal, and ensure compliance with other operational requirements specific to the RCRA permit;
- assisting in maintaining the operating record; and,
- preparing biennial reports, unmanifested waste reports, and other reports as necessary.

7.1.4 Site Security Officers

The site security officers will control access to the Facility, ensure site security, and possess high school diplomas or equivalent.

The site security officers will have the following responsibilities:

- controlling entry, at all times, through gates or other entrances to the active portion of the Facility;
- ensuring site security;
- inspecting the perimeter fence to prevent unknowing entry and prevent the unauthorized entry of persons or livestock onto the active portion of the Facility; and,
- initially locating and then maintaining warning signs that indicate "Danger - Unauthorized Personnel Keep Out" in both English and Spanish, which will be posted on the perimeter fence and will be legible from a distance of 25 feet.

7.1.5 Laboratory Specialist

The laboratory specialist will help to assure that wastes received at the Facility are consistent with waste profiles supplied by generators.

The laboratory specialist will possess the following qualifications:

- a four-year science degree or sufficient experience to adequately perform acceptance testing;
- working knowledge of the New Mexico Hazardous Waste Act and the New Mexico Hazardous Waste Regulations; and,
- familiarity with the Waste Analysis Plan and waste analysis practices and procedures.

The laboratory specialist will have the following responsibilities:

- developing sampling, characterization, and testing procedures for waste received and generated at the Facility;

- directing or performing sampling, characterization, and testing for the Facility;
- determining if waste is acceptable for treatment, storage, and disposal according to waste profile information submitted by the generator;
- determining if fingerprint testing confirms generator information provided on the waste profile and manifest; and,
- implementing the laboratory QA/QC program.

7.1.6 Maintenance Personnel

Maintenance personnel will maintain all equipment, buildings, and roads.

Maintenance personnel will possess the following qualifications:

- high school diploma or equivalent; and,
- two years experience in an industrial setting.

Maintenance personnel will have the following responsibilities:

- developing maintenance procedures; and,
- performing maintenance-type activities, including repairs, preventive maintenance, and corrective actions associated with RCRA inspections.

7.2 TRAINING CONTENT AND FREQUENCY

Section 7.2.1 describes the training program for Facility personnel, Section 7.2.2 describes training for visitors, and Section 7.2.3 describes training for off site emergency response organizations.

7.2.1 Training Program for Facility Personnel

All new employees will be required to successfully complete the training program related to their position. Training programs will include RCRA classroom training, OJT, OSHA 40-hour training, and annual refresher training for all three programs. The OJT and OSHA 40-hour training sessions will be required only for those personnel who will handle hazardous waste and the supervisors of personnel who will handle hazardous waste. Employees will not be permitted to assume unsupervised job duties until successful completion of all the required elements of their training program. As soon as practicable following a new employee's hire date, successful completion of the training program specific to his or her position must be accomplished, and certification of the completion will be recorded and kept on file by the RCRA training officer.

7.2.1.1 Classroom Training

The initial classroom training will consist of at least one 8-hour session. Annual refresher training will consist of at least one 4-hour session. The outline of the annual refresher is the same as the outline for the initial classroom training; however, the refresher training will be an abbreviated version of the initial training at an accelerated pace. The RCRA classroom training will include the following goals:

- developing a basic understanding of the regulatory requirements for a treatment, storage, and disposal facility;

- promoting understanding of policies and procedures necessary to protect human health and the environment;
- ensuring proper management of hazardous waste; and,
- educating employees regarding response to emergencies.

The outline for the RCRA training class will consist of the following elements:

- an introduction to RCRA, including a general description of RCRA and Hazardous and Solid Waste Amendments (HSWA); the definition of hazardous waste; waste generator requirements; treatment, storage, and disposal requirements; and labeling, inspection, record keeping, and reporting requirements;
- requirements associated with the RCRA permit for the Facility;
- Facility-specific waste management, including general procedures for receipt and handling of waste from off site as well as management of waste generated onsite;
- decontamination procedures;
- emergency procedures, including response to fires, explosions, and releases, and shutdown of operations;
- emergency equipment location and use;
- emergency systems- such as- the- communication and alarm systems and the fire suppression system;
- Contingency Plan;
- evacuation plan;
- waste minimization;
- occupational health and safety, including items such as personal protective clothing and equipment, general industrial safety, and employee Right-to-Know (the Hazard Communication Standard);
- transportation of hazardous waste, including marking, labeling, placarding, loading, use of shipping papers, record keeping, and other DOT requirements; and,
- maintenance of documentation.

Facility tours and audio-visual aids in conjunction with lectures and procedure manuals will be utilized in the classroom training. A written test will be administered at the completion of classroom training. A grade of 80 percent or better will be required to demonstrate mastery of the course material. The course curriculum will be reviewed at least annually by the RCRA training officer to ensure that it is current and appropriate.

7.2.1.2 Job-Specific Training

The RCRA classroom training will be supplemented with OJT tailored to each employee's actual job responsibilities. All employees who handle hazardous waste and supervisors of personnel who handle hazardous waste will be required to complete OJT; employees who will not handle hazardous waste and will not directly supervise personnel who will handle hazardous waste will not receive OJT. The purpose of OJT is not to demonstrate to personnel how to perform their duties, but rather to demonstrate how to perform their duties safely and in compliance with RCRA.

OJT will be conducted in the work area by the line supervisor or foreman subsequent to classroom training. The length and complexity of the OJT will vary according to the employee's responsibilities; however, it is anticipated that OJT will take approximately 1 to 2 hours.

A checklist developed by the work area supervisor will be used for OJT. Prior to initial use of the checklist, it must be reviewed and approved by the RCRA training officer. All employees performing similar duties will have consistent OJT. The OJT checklist will be reviewed at least annually to ensure that it is current and appropriate for the subject job classification.

The OJT checklist will include the following elements:

- information about procedures relevant to the individual's position, where these procedures are located, and which personnel have the authority to implement the procedures;
- key operating parameters and waste feed cut-off systems;
- location and use of communications or alarm systems;
- response to releases;
- emergency and routine shutdown of operations;
- Facility Contingency Plan and emergency procedures;
- response to leaks, spills, and overflows;
- Waste Analysis Plan procedures; and,
- inspection and maintenance procedures.

After the OJT checklist has been completed, it will be signed by both the employee and the supervisor. The checklist will be provided to the RCRA training officer, who will be responsible for maintaining training records.

7.2.1.3 OSHA 40-Hour Training

All personnel who handle hazardous waste and the supervisors of personnel who handle hazardous waste will complete OSHA 40-hour training as required by 29 CFR 1910.120. It is anticipated that, at least initially, the OSHA 40-hour training will be provided by an outside vendor. Personnel who have documentation of course completion for the 40-hour and refresher training will not be required to retake the 40-hour training.

7.2.2 Training for Visitors

Visitors who are expected to be in the Facility for only a short period of time and who will not be handling hazardous waste will be provided a short briefing on basic emergency procedures such as decontamination, emergency signals and alarms, and evacuation routes. Visitors will not be allowed onsite unless they are escorted by Facility personnel or unless other arrangements have been made with Facility personnel. The briefing will include the following information:

- what hazards that may be encountered at the Facility;
- how emergencies are signaled or announced, how help is summoned , what information is to be given, and to whom the information is given;
- where to report during an emergency;
- how to safely evacuate from the Facility;
- what standard operating procedures for visitors are;
- where check-in/check out locations are; and,
- what safety equipment is required.

7.2.3 Training for Off site Emergency Response Organizations

Training will be established for off site emergency response organizations through agreements with local agencies and contracts with vendors. This training will include, as appropriate, the following:

- site layout and site-specific hazards;
- the Contingency Plan;
- Facility emergency procedures;
- Facility decontamination procedures; and,
- appropriate response techniques.

7.3 RECORD KEEPING

In accordance with 40 CFR 264.16, records regarding job title, job description, training, and other appropriate documentation will be kept by the RCRA training officer.

7.3.1 Job Titles, Descriptions, and Duties

Job titles will be designated for each position at the Facility related to hazardous waste management and the name of each employee filling each job. Job descriptions will detail job duties and responsibilities for that position. The description will include the skills, education, and qualifications required for each position. A written description for each position will be maintained to determine the types and amounts of both introductory and continuing training to be given to each employee at the Facility.

7.3.2 Training Documentation

Records that document RCRA classroom training and OJT given to and completed by Facility personnel will be kept by the RCRA training officer. Training records on current employees will be kept until closure of the Facility. Training records on former employees will be kept for at least three years from the date the employee last worked at the Facility.

7.3.3 Other Documentation

Other documentation to be maintained at the Facility, includes the following:

- documentation of the annual review of the curriculum for RCRA classroom training;
- documentation of the annual review of the OJT checklists; and,
- RCRA classroom training test results.

Facility Personnel

- Those who handle hazardous waste
  - classroom training
  - on-the-job training
  - OSHA 40-hour
- Those who do not handle hazardous waste
  - classroom training

Visitors

- Expected to be onsite briefly of infrequently
  - basic training on actions to be taken during an emergency; does not allow visitors to attempt to respond to emergencies except in very limited circumstances

Offsite Emergency Responders

- May be different for different organizations
  - training tailored to their role
  - familiarization with site

FACILITY RCRA TRAINING PROGRAM

TRIASSIC PARK WASTE DISPOSAL FACILITY

Figure 7-1

8.0 CLOSURE AND POST-CLOSURE OF PERMITTED UNITS

This closure plan describes specific activities required for closure of the drum handling unit, roll-off storage area, stabilization unit and associated liquid waste receiving and storage unit, evaporation pond, and landfill, in compliance with RCRA closure requirements. The closure activities are designed to minimize the need for further maintenance and any potential impacts to human health and the environment. Closure activities are described in Section 8.1. A post-closure care plan for the landfill is included in Section 8.2. Section 8.3 presents the closure performance standard; and Section 8.4 discusses the closure schedule. Closure certification and modifications are discussed in Sections 8.5 and 8.6, respectively. Closure and post-closure cost estimates are discussed in Section 8.7 and compliance with financial assurance requirements is discussed in Section 8.8.

8.1 CLOSURE ACTIVITIES

At the end of the active life of the Facility, all units and structures of the Facility will be closed and dismantled. Solid hazardous waste and debris will be placed in the landfill, and non-hazardous waste will be sent off site for reuse, recycle, or disposal. Liquids generated during closure (decontamination solutions and evaporation pond liquid) will generally be treated onsite. The landfill will be capped with a final cover, and post-closure care will be initiated for the landfill. These closure activities are described in detail in the following sections. The unit-specific closure descriptions are presented in the order in which the units are anticipated to be closed.

Prior to the commencement of closure activities, GMI will notify the secretary of NMED at least 60 days prior to the date GMI expects to begin closure of the Facilities. In addition, GMI will notify the secretary 45 days prior to the closure of the evaporation ponds, container storage units and storage tanks. The schedule for closure is described in more detail in Section 8.4 and shown in Figure 8-1.

8.1.1 Drum Handling Unit

The following steps will be necessary to complete closure of the drum handling unit:

- removal of remaining waste and other material in the storage area;
- decontamination of equipment in the area and dismantling of the building structure;
- dismantling of the concrete floor and secondary containment; and,
- sampling of soil beneath the floor to determine if contamination is present.

8.1.1.1 Removal of Inventory

Closure of the drum handling unit will commence with removal of any inventory or other materials stored in the area according to standard operating procedures. Remaining inventory will be removed within 90 days after receipt of the final volume of hazardous wastes at the unit. For the purposes of this plan, GMI will arrange for all waste remaining in inventory to either be disposed of directly in the landfill, treated at the onsite treatment unit prior to disposal in the landfill, or returned to the generator if either of the previous two options are not available. If required, the hazardous materials could be returned to the generator utilizing the same method of transportation that was used to deliver the material to the site (e.g., end dump trucks).

After removal of the building, contaminated soils will be removed for disposal and the area resampled until the sampling and analyses indicate that the area meets the performance standard provided in Section 8.3. Contaminated soils will be disposed of in accordance with the regulations applicable to the contaminate of concern. If the landfill portion of the Facility is still operational and the

contaminated soil meets the waste acceptance criteria for the landfill it will be landfilled at GMI. If the GMI landfill cannot accept the waste it will be manifested and shipped to an appropriately licensed disposal facility.

Closure cost estimates and waste volumes for disposal are based on the worst-case scenario of all wastes requiring stabilization at the onsitetreatment unit prior to landfilling. In the case of the drum handling unit, it is assumed that all 1,120 drums contain sludges that must be stabilized. For these calculations, the maximum inventory of the drum handling unit at the time of closure is assumed to be the maximum permitted capacity of the unit.

8.1.1.2 Decontamination of Equipment and Dismantling of Building Structure

Equipment in the area, such as pallets or drum-moving equipment, that may have contacted hazardous waste will either be decontaminated or disposed as hazardous waste. Large equipment, such as the fork trucks, will be decontaminated. Disposal as waste will be the preferred option only for items, such as wood pallets, that are difficult to decontaminate.

The building structure (roof and walls) is not anticipated to be contaminated with hazardous waste; however, it will be cleaned and rinsed prior to, or during, dismantling. The dismantled building structure will either be reused elsewhere or recycled as scrap metal.

A high-pressure detergent wash and water rinse will be used to clean off all visible residue. The use of wash water will be limited to minimize the amount of waste generated. All decontamination solutions will be collected in containers or portable tanks. The decontamination solutions will either be treated onsite or trucked to an approved off site facility for treatment. The expected volume of decontamination solutions that will be generated during closure of the drum handling unit is included in the liquid waste amounts shown in Table 8-1.

8.1.1.3 Dismantling of Concrete Floor and Secondary Containment

Secondary containment for the drum handling unit will be provided by a flexible membrane lined trench and collection sump system. Drums will be stored on an uncoated concrete floor that drains to the trench and sump system. Because the concrete will not be coated, decontamination at closure is not proposed; rather, the concrete will be broken up and removed as hazardous debris. Upon certification of compliance with the LDR requirements, the concrete will be disposed in the landfill. The liner and collection sump system will also be removed at closure and disposed in the landfill. The expected volume of solid hazardous waste that will be generated during closure is provided in Table 8-1.

8.1.1.4 Soil Sampling

After removal of the drum handling unit structure and containment, soil samples will be collected and analyzed for constituents that may have been present in the stored wastes to determine if any contamination occurred from releases. Seven samples will be collected from locations that correspond to the floor drain sumps (see Drawings 37, 38 and 39 in Volume III). Sample results will be compared against the closure performance standard presented in Section 8.3.

Contaminated soils will be removed for disposal and the area resampled until the sampling and analyses indicate that the area meets the performance standard provided in Section 8.3. Contaminated soils will be disposed of in accordance with the regulations applicable to the contaminate of concern. If the landfill portion of the Facility is still operational and the contaminated soil meets the waste acceptance criteria for the landfill it will be landfilled at GMI. If the GMI landfill cannot accept the waste it will be manifested and shipped to an appropriately licensed disposal facility.

An off site laboratory will be used for analysis of hazardous waste and soil samples at closure. The off site laboratory will be an EPA approved laboratory with an internal QA/QC program and specific procedures for each analytical method.

8.1.2 Evaporation Pond

The primary steps required to complete closure of the evaporation pond are the following:

- removal of remaining liquid waste;
- removal and solidification of sludge;
- removal and disposal of liner and leachate collection system; and,
- sampling of soil beneath the unit to determine if contamination is present.

8.1.2.1 Removal of Liquid Waste

The liquid in the evaporation pond will be allowed to evaporate naturally. At the beginning of closure of the evaporation pond, no further waste will be accepted into the pond. The water balance for the site indicates that there is a net loss of approximately 80 inches of water per year (90 inches of evaporation minus 10 inches of precipitation). The liquid in the evaporation pond has an approximate depth of 8 feet, and it is assumed that at closure there will be 2 feet of sludge in the bottom of the pond, leaving 6 feet of liquid (72 inches). Therefore, 1 year is projected to be adequate time to evaporate all the liquid in the pond, assuming it is full to capacity at the time closure is initiated.

8.1.2.2 Removal and Solidification of Sludge

Following evaporation of the pond liquid, the sludge will be dredged from the bottom and solidified in the treatment unit. The stabilized waste will be placed in roll-off containers for disposal in the landfill. The expected volume of sludge that will be removed and disposed in the landfill is shown in Table 8-1. This information is based on an estimated sludge depth of 2 feet.

8.1.2.3 Removal and Disposal of Liner and Leachate Collection System

The pond liner and leachate collection system will be dismantled and removed as hazardous debris. Upon certification of compliance with the LDR requirements, the waste will be disposed in the landfill. The expected volume of solid hazardous waste that will be generated during closure is provided in Table 8-1.

8.1.2.4 Soil Sampling

After removal of the liquid, sludge, and evaporation pond liners, soil samples will be collected and analyzed for constituents that may have been present in the stored wastes to determine if any contamination occurred from releases. Ten samples will be collected. Two will be from locations that correspond to the leachate collection sump and the tanker pad fill line, and eight at random locations. Sample results will be compared against the closure performance standard presented in Section 8.3.

Contaminated soils will be removed for disposal and the area resampled until the sampling and analyses indicate that the area meets the performance standard provided in Section 8.3. Contaminated soils will be disposed of in accordance with the regulations applicable to the contaminate of concern. If the landfill portion of the Facility is still operational and the contaminated soil meets the waste

acceptance criteria for the landfill it will be landfilled at GMI. If the GMI landfill cannot accept the waste it will be manifested and shipped to an appropriately licensed disposal facility.

8.1.3 Liquid Waste Receiving and Storage Unit

The following steps will occur during closure of the liquid waste receiving and storage unit associated with the stabilization unit:

- removal and treatment of tank contents;
- dismantling and removal of tanks, ancillary equipment, and concrete containment area; and,
- sampling of soil beneath the unit to determine if contamination is present.

8.1.3.1 Removal of Inventory

Closure of the liquid waste receiving and storage unit will commence with removal of any inventory in the tanks according to standard operating procedures. Remaining inventory will be removed within 90 days after receipt of the final volume of hazardous wastes in the tanks. All wastes remaining in inventory can be treated at the onsite stabilization unit prior to disposal in the landfill. Closure cost estimates and waste volumes for disposal were based on the worst-case scenario of all four tanks being full to capacity at the start of closure. The maximum possible inventory for each tank at the time closure is initiated is equal to the permitted capacity of the tanks.

8.1.3.2 Dismantling of Tanks, Equipment, and Concrete Secondary Containment Area

The tanks and ancillary equipment will be dismantled and disposed in the landfill after certification of compliance with LDR requirements. After removal of the tanks, the concrete containment will be broken up and removed as hazardous debris. Upon certification of compliance with the LDR requirements by a New Mexico registered professional engineer, the concrete will be disposed in the landfill. The expected volume of solid hazardous waste that will be generated during closure is provided in Table 8-1.

8.1.3.3 Soil Sampling

After removal of the tanks and containment, soil samples will be collected and analyzed for constituents that may have been present in the stored wastes to determine if any contamination occurred from releases. Four samples will be collected from locations that correspond to the containment sumps. Sample results will be compared against the closure performance standard presented in Section 8.3.

8.1.4 Stabilization Unit

The primary steps required to complete closure of the stabilization unit are the following:

- removal of remaining waste inventory;
- decontamination and removal of equipment and building structure;
- dismantling of the tanks and secondary containment area; and,
- sampling of soil beneath the floor to determine if contamination is present.

8.1.4.1 Removal of Inventory

Closure of the stabilization unit will commence with removal of any inventory remaining in the tanks according to standard operating procedures. Remaining inventory will be stabilized and removed within 90 days after receipt of the final volume of hazardous wastes at the unit. The stabilized waste will be placed in roll-off containers for disposal in the landfill. The maximum possible inventory for the tanks at the time closure is initiated is equal to the working capacity of the unit (approximately one-third full) because adequate space must remain for addition of reagents and for mixing.

8.1.4.2 Decontamination of Equipment and Dismantling of Building Structure

Equipment in the area, such as waste mixing equipment, that may have contacted hazardous waste, will either be cleaned or disposed as hazardous waste. The building structure (roof and walls) is not expected to be contaminated with hazardous waste; however, this will be cleaned and rinsed prior to dismantling. The building structure will be dismantled after cleaning and will either be reused or recycled as scrap metal. Building components and associated reagent silos that did not contact hazardous waste will be dismantled and removed from the site.

A high-pressure detergent wash and water rinse will be used to clean off all visible residue. The use of wash water will be limited to minimize the amount of waste generated. All decontamination solutions will be collected in containers or portable tanks. The decontamination solutions will either be treated onsite or trucked to an approved off site facility for treatment. The expected volume of decontamination solutions that may be generated during closure of the stabilization unit is included in the liquid waste amounts shown in Table 8-1.

8.1.4.3 Dismantling of Tanks and Secondary Containment Area

The tanks, concrete, and secondary containment system will be dismantled and removed as hazardous debris. Upon certification of compliance with the LDR requirements, the waste will be disposed in the landfill. The expected volume of solid hazardous waste that will be generated during closure is provided in Table 8-1.

8.1.4.4 Soil Sampling

After removal of the treatment unit structure, tanks, and containment, soil samples will be collected and analyzed for hazardous constituents that may have been present in the stored wastes to determine if any contamination occurred from releases. Two samples will be collected from locations that correspond to the vault and floor drain sumps. Sample results will be compared against the closure performance standard presented in Section 8.3.

8.1.5 Roll-Off Storage Area

Closure of the roll-off storage area will be identical to closure of the drum handling unit, except that the roll-off storage area does not have a structure associated with it. The major steps of inventory removal, equipment decontamination, primary and secondary containment removal, and soil sampling will be identical to those described in Section 8.1. Estimated waste volumes for closure of the roll-off storage area are included in Table 8-1. One soil sample will be collected from a location corresponding to the containment sump.

8.1.6 Landfill

At closure of the landfill, a final cover will be emplaced that is less than or equal to the permeability of the bottom liner. The final cover will consist of a three-layer cap design consisting of a vegetative

cover, a middle drainage layer, and a lower liner, as described in Section 5.0 of Volume III. The final cover will meet the following requirements:

- the vegetative cover will have a minimum thickness of 2 feet and final upper slopes of between 3 and 5 percent after settlement and subsidence of the waste. Native grasses will be planted;

- the middle drainage layer will consist of a HDPE geomembrane liner overlaid by a geocomposite and will be designed to allow lateral flow and discharge of liquids;

- the bottom layer will consist of a GCL underlain by 6 inches of prepared subgrade and 1.5 feet of protective soil; and,

- the cover will be designed to function with minimum maintenance, including minimal erosion. The vegetative cover will be designed with a surface drainage system capable of conducting run-off across the cap without forming rills and gullies.

Leachate will be pumped from the primary and secondary collection systems throughout the closure period and will continue throughout post-closure care.

A treatment system will be designed and built onsite to treat the leachate generated during closure and post-closure. The treated leachate will be used to irrigate the cap vegetation and any excess will be released to the stormwater retention basin. The leachate treatment system to be operated after closure of the evaporation pond will qualify as a wastewater treatment unit as defined in 40 CFR 260.10 and will be subject to regulation under the Clean Water Act. The treatment unit will thus be exempt from RCRA permitting requirements under 40 CFR 270.1(c)(2)(v), and the treated effluent will be exempt from RCRA (not a solid waste) under 40 CFR 261.4(a)(2). The effluent from the leachate treatment system will be treated to meet the standards listed in the final NPDES permit prior to discharge for irrigation or to the stormwater retention basin.

After the landfill cap is completed, 10 soil samples will be collected from outside the perimeter of the landfill cap to determine if any soil contamination is present. The sampling locations will primarily correspond to the transportation corridor used by waste hauling trucks during the active life of the landfill.

No later than the submission of the certification of closure of the landfill, the Facility will submit to the local zoning authority and to the NMED, a survey plat indicating the location and dimensions of the landfill with respect to permanently surveyed benchmarks. This plat will be prepared and certified by a professional land surveyor. The survey plat will contain a prominent note that asserts the Facility's obligation to restrict disturbance of the hazardous waste disposal unit. The Facility will also record a notation on the deed to the Facility property to notify any potential purchasers of the property that (1) the land has been used to manage hazardous wastes; (2) use of the land is restricted to activities that will not disturb integrity of the final cover system or monitoring system during the post-closure care period; and (3) the survey plat and record of waste disposal have been submitted to the local zoning authority and to the NMED.

A record of the type, location, and quantity of hazardous wastes disposed of within the disposal unit will be submitted to the local zoning authority and to the NMED no later than 60 days after certification of closure of the landfill.

8.1.6.1 Landfill Cover

Due to the phased construction and operation of the landfill a number of assumptions were made in estimating the cost of final cover. These assumptions include:

- only one phase will be open and emplacing waste at any given time;
- as a phase of the landfill is filled to capacity, the final cover will be placed on that section to minimize the infiltration of moisture and to isolate the waste, thereby being more protective of human health and the environment;
- there would never be more than one third (1/3) of the landfill with waste requiring placement of a cover should closure be commenced prior to the landfill reaching capacity; and,

Based on these assumptions, the cost of the final cover construction was estimated for an area at 36 acres, approximately 1/3 at the total landfill footprint.

Upon placement of the final cover on any portion of the landfill, leachate collection and removal will continue for the active life of the Facility. Once all phases of the landfill have reached capacity and the final cover placed on the last phase, certification and post closure activities will begin.

8.2 POST-CLOSURE ACTIVITIES

Post-closure care involves long-term maintenance, monitoring, and reporting of activities that are carried out after closure is completed. Post-closure care is only anticipated to be needed for the landfill after closure. However, if clean closure cannot be certified for any unit components or secondary containment areas associated with the drum handling unit, tank storage area, stabilization unit, evaporation pond, or roll-off storage area, then those closure activities that have been completed will be certified and a permit modification request will be submitted to NMED to include post-closure activities for those portions of the units that do not meet the closure performance standard.

The post-closure care period for the landfill will begin after completion of closure activities and continue for 30 years. Inspection, maintenance, and repair activities to be conducted during post-closure are described in the following sections.

8.2.1 Security Systems

The Facility perimeter fence and warning signs will be inspected and maintained throughout the post-closure period. Monthly inspections will include checking the condition of fencing, locks, gates, and warning signs. Any signs of unauthorized entry will be reported to the local sheriff's office and NMED. Routine maintenance will be performed based on inspection findings to repair or replace damaged or deteriorating items.

8.2.2 Landfill Final Cover

The integrity and effectiveness of the landfill final cover will be maintained, including making necessary repairs to correct the effects of settling, erosion, water damage, animal damage, or other events. The landfill cover will be inspected monthly and after heavy precipitation events. Inspections will include checking for signs of cracking, subsidence, ponding water, erosion, burrowing animals, or deep-rooted vegetation. Repairs will be scheduled in a timely manner upon noting deficiencies in order to ensure that the final cover maintains its effectiveness.

General maintenance will include the following activities:

- fertilizing the vegetation periodically;
- sprinkling or irrigating as needed;
- re-establishing damaged or sparse vegetative cover, including seeding and fertilizing;
- conducting erosion damage repair, including soil excavation, transport and placement, seeding and fertilizing;
- regrading as needed to overcome the effects of subsidence or to repair areas where ponding is occurring; and,
- providing rodent control as needed, including trapping and relocating animals and repairing damage caused by burrowing.

Soil for erosion repair and regrading will be excavated from unused areas onsite and transported to the cap area for use in maintenance activities.

8.2.3 Perimeter Diversion Ditch

The perimeter diversion ditch will be inspected and maintained throughout the post-closure period to ensure its designed functions to divert precipitation and run-on from the landfill area. Inspections will be conducted monthly and will include checking for accumulated sediments and debris, and signs of erosion. Repairs will be scheduled in a timely manner, upon deficiencies being noted, to ensure that the diversion ditch maintains its effectiveness.

General maintenance activities will include diversion ditch cleaning to remove accumulated sediments and debris, and regrading, as needed, to repair the effects of erosion.

8.2.4 Leachate Management System

8.2.4.1 Leachate Collection System

The leachate collection and removal system will be operated until leachate is no longer detected. Leachate pumps will initially be operated at least monthly. The volume of leachate pumped will be recorded in a site log. After records indicate that the sump has remained dry for six months, the frequency of inspection and operation of the sump pumps will be changed to semi-annually. Any leachate collected will be pumped to above-ground storage tanks and transferred to the onsite leachate treatment unit.

The leachate collection system will be inspected monthly or semi-annually as described in the preceding paragraph. Pumps will be inspected for proper operation. The riser pipes, grout seals, and other visible above-ground portions of the system will be inspected for integrity. The level of liquid in the sumps will be measured prior to pumping out accumulated leachate.

Routine maintenance will be conducted to ensure that the leachate collection system remains operable. Locking caps and standpipe grouting will be repaired or replaced as necessary. Accumulated sediments or sand in the standpipes will be removed as necessary to enable the system to function properly. Based on the amount of leachate collected over time, a determination will be made about the integrity of the collection system. If a system is suspected of being clogged, an assessment by a New Mexico registered professional engineer will be made. All repairs will be made by a certified contractor according to the New Mexico registered professional engineer's assessment.

8.2.4.2 Onsite Treatment of Leachate

During the post-closure care period, an onsite leachate treatment unit will be operated to treat and discharge collected leachate. The unit will be designed and operated in accordance with wastewater treatment standards under the Clean Water Act. An NPDES permit will be obtained prior to discharge of any treated leachate.

The treatment unit will be inspected and maintained during the time leachate is being generated from the closed landfill. Operations and maintenance will be in accordance with manufacturer's specifications. Any residues resulting from leachate treatment will be disposed off site at a permitted or interim status hazardous waste facility.

Treated leachate will be used to irrigate the cap vegetation and any excess will be released to the stormwater retention basin. The irrigation system will be maintained and repaired, as necessary, during the time leachate is being generated and treated.

8.2.4.3 Leak Detection System

During the post-closure care period, the leak detection system beneath the landfill primary liner will initially be monitored and inspected monthly to ensure that it is operating correctly and that any leachate that has migrated through the primary liner is collected and removed. As with the primary leachate system, the volume of leachate pumped from the secondary leak detection system will be recorded in a site log. After records indicate that the sump has remained dry for six months, the frequency of inspection and operation of the leak detection system will be changed to semi-annually.

Inspections and maintenance will be similar to those described for the leachate collection system (see Section 8.2.4.1).

8.2.5 Vadose Zone Monitoring System

The vadose zone monitoring system will be maintained and monitored throughout the post closure care period. The following sections outline the post-closure monitoring plan for this system.

8.2.5.1 Sampling and Analysis

Vadose zone monitoring will be conducted semi-annually to test for the presence of contaminants in the unsaturated sediments hosting the landfill. Sampling procedures and analytical parameters will follow the same guidelines used during the active life of the Facility.

8.2.5.2 Inspection and Maintenance

The visible above-ground portions of the vadose zone monitoring system will be inspected semi-annually for integrity. Routine maintenance will be conducted to ensure that the vadose zone monitoring system remains in operable condition. System equipment will be repaired or replaced as necessary.

8.2.6 Recordkeeping

A post-closure Facility record will be maintained. This record will include the dates and times of inspections, inspection findings, name of inspector, volumes of leachate pumped, disposition of leachate, sampling results of leachate and vadose zone samples, and dates and nature of any corrective actions taken.

8.2.7 Certification of Post-Closure

Within 60 days after completion of the established post-closure care period for the Facility, the permittee will submit to NMED a certification that the post-closure operations were performed in accordance with the approved post-closure plan. The certification will be signed by the permittee and an independent New Mexico registered professional engineer.

8.2.8 Amendment of Plan

The permittee will submit a permit modification request for changes to the post-closure plan if changes in operating plans or Facility design, or events that occur during the active life of the Facility, affect the approved post-closure plan. The owner or operator may also request a modification to the post-closure plan at any time during the active life of the Facility or during the post-closure care period. Permit modification requests will be submitted at least 60 days prior to a proposed change in Facility design, or no later than 60 days after an unexpected event which affects the post-closure plan.

If clean closure cannot be certified for any unit components or secondary containment areas associated with the drum handling unit, tank storage area, stabilization unit, evaporation pond, or roll-off storage area, then a post-closure care permit application for those portions of the units that do not meet the closure performance standard will be submitted to NMED no later than 90 days after the owner or operator determines that the hazardous waste management unit must be closed as a landfill.

A request for changes to the post-closure plan will include the following items if appropriate:

Amended Waste Analysis Plan;
Vadose Monitoring Plan;
Amended Closure Plan;
Amended Post-Closure Plan;
Updated Closure Cost Estimate;
Updated Post-closure Care Plan;
Updated Financial Assurance Plan for Closure;
Updated Financial Assurance Plan for Post Closure; and,
Contingent Corrective Measure.

8.2.9 Facility Post-Closure Contact

During the post-closure care period, the Facility contact organization will be the following:

Gandy Marley, Inc.
1109 East Broadway
Tatum, New Mexico 88267
(505) 398-4960

8.3 CLOSURE PERFORMANCE STANDARD

The RCRA closure performance standard (40 CFR 264.111) specifies that hazardous waste facilities are to be closed in such a way as to minimize the need for further maintenance at the Facility and

protect human health and the environment by controlling, minimizing, or eliminating potential releases of hazardous waste to the environment.

The Facility-specific clean-closure performance standard for the drum handling unit, roll-off storage area, tank storage area, stabilization unit, and evaporation pond is based on sampling soil from beneath the units. The landfill will not be clean-closed; therefore, the Facility-specific, clean-closure performance standard is not applicable.

Indicator parameters will be selected for each unit at closure. These parameters will be representative of the wastes stored and/or treated in that unit during its operating life. The waste information used to make these selections will be based upon the Facility operating record. For soil, analytical results that show that these selected constituents are within three standard deviations of the mean constituent concentration in clean background soil will constitute demonstration of clean closure. Clean background soil samples will be collected from the surrounding area outside the Facility fence line.

8.4 CLOSURE SCHEDULE

Closure of all units at the Facility will be initiated when the landfill nears its final capacity because the other units exist only to support landfill disposal activities. In other words, the drum handling unit, roll-off storage area, liquid waste receiving and storage unit, stabilization unit, and evaporation pond will not continue to operate after the landfill has reached capacity and is no longer in use. Closure is expected to begin when the landfill is nearing final capacity, allowing enough capacity in the landfill to dispose of all solid wastes generated during closure activities. Expected waste volumes that will be generated during closure are shown in Table 8-1.

At the time of final Facility closure, the drum handling unit will be closed first, as wastes from this area may need to be processed through the stabilization unit prior to disposal onsite. Concurrent with the closure of the drum handling unit, the evaporation pond closure will begin because sludge from the pond must also be treated in the stabilization unit. After closure of the evaporation pond begins, the leachate from the landfill will be collected in tanks and shipped off site. Following closure of the drum handling unit and during evaporation of the liquid in the ponds, the liquid waste receiving and storage unit will be closed. After the pond sludge has been removed and treated, the stabilization unit will be closed, and last the roll-off storage area will be closed. The landfill cover will be constructed when all closure wastes have been placed in the landfill.

Notification will be provided to the NMED in writing at least 60 days prior to beginning closure of the entire Facility. Closure of the drum handling unit, liquid waste receiving and storage unit, stabilization unit, and roll-off storage area will proceed sequentially, and each closure will be completed within 180 days.

The closure regulations allow a period of 180 days from receipt of the final volume of waste at each unit for closure activities, [per 40 CFR Section 264.113(b)(1)] unless "...final closure activities will, of necessity, take longer than 180 days to complete."

8.5 CERTIFICATION OF CLOSURE

Within 60 days of completion of closure of each unit, and within 60 days of completion of final Facility closure, the Facility will submit to NMED, a certification that the hazardous waste management unit has been closed in accordance with the approved closure plan. The certification will be signed by the owner or operator and by an independent New Mexico registered professional engineer. Post-closure will also be certified at the end of the 30-year post-closure care period.

8.6 MODIFICATIONS TO THE CLOSURE PLAN

After this closure plan is approved, it will be amended whenever it is affected by changes in operating plans or Facility design. While conducting partial or final closure activities, unexpected events may be identified that also require amendment of the approved closure plan. Requests for modification will be made within 30 days of identifying an event that justifies plan modification.

8.7 CLOSURE COST ESTIMATES

The closure costs are described in the following sections.

8.7.1 Closure Costs

Table 8-1 summarizes the closure cost estimates for the drum handling unit, roll-off storage area, liquid waste receiving and storage unit, stabilization unit, evaporation pond, and phased landfill closure. These estimates are based on 1997 dollars and will be updated annually as required in 40 CFR Part 264.142(b).

These estimates are based on costs for closure when each unit is at maximum capacity, which is the point in the Facility's active life when the extent and manner of its operation would make closure the most expensive. As required in 40 CFR Part 264.142(a)(2), cost estimates are based on the costs of hiring a third party to close the Facility. In reality it is expected that Facility personnel will perform many closure tasks. Costs for onsite disposal are used in this cost estimate because Facility closure will be scheduled when sufficient landfill capacity remains to handle closure wastes. The maximum volume of waste that the Facility is projected to generate through closure activities is also shown in Table 8-1.

8.7.2 Post-Closure Costs

Table 8-2 summarizes the post-closure cost estimate for the landfill. The costs include 30 years of monitoring and maintenance activities, as described in Section 8.2. These estimates are based on 1997 dollars and will be updated annually as required in 40 CFR Part 264.144(b).

8.8 FINANCIAL ASSURANCE

The treatment, storage and disposal facility standards found in 40 CFR 264 require facilities to establish and maintain financial assurance for three areas prior to operation. 40 CFR 264.143 defines the standards for financial assurance for closure, 40 CFR 264.145 the standards for post-closure care, and 40 CFR 264.147 defines the liability requirements for coverage of sudden accidental occurrences. The financial instruments selected to provide coverage for these three requirements must be implemented and submitted to the NMED at least 60 days prior to the initial receipt of waste.

8.8.1 Financial Assurance for Closure

Upon receipt of the final permit for the Facility, GMI will evaluate and select one of the financial instruments defined in 40 CFR 264.143 to provide financial assurance for the closure of the Facility. Selection of one of the following six financial instruments will consider the effectiveness and economics of the particular options. The instruments defined in the regulations are:

1. Financial test and corporate guarantee for closure
2. Closure trust fund
3. Surety bond guaranteeing payment into a closure trust fund

4. Surety bond guaranteeing performance of closure

5. Closure letter of credit

6. Closure insurance

The appropriate instrument will be selected, implemented, and submitted a minimum of 60 days prior to the initial receipt of waste as required by the regulations defined in this subpart.

8.8.2 Financial Assurance for Post-Closure Care

Similar to the financial assurance requirements for closure activities, the Facility is required to provide assurances for the post-closure care of the Facility. Upon receipt of the final permit, and 60 days prior to the initial receipt of waste, the owner/operators will provide the appropriate financial instrument to fulfill this requirement. Selection of the instrument to be used will be based upon economic and performance considerations. The financial instruments allowed by this subpart of the regulations are listed in Section 8.8.1.

8.8.3 Liability Requirements

As stated in 40 CFR 264.147, an owner or operator of a hazardous waste treatment, storage, or disposal facility must demonstrate financial responsibility for bodily injury and property damage to third parties caused by sudden accidental occurrences which arise from the operation of the facility. This section of the regulations requires that the owner/operator of such a facility provide the administrator one of the following instruments at least 60 days prior to the initial receipt of waste;

1. Liability insurance

2. Financial test

3. Letter of credit

4. Surety bond

5. Trust fund

6. Combination of the above

GMI will submit required documentation demonstrating financial assurance to meet the liability requirements at least 60 days prior to receiving the first hazardous waste at the Facility. The financial assurance mechanism will comply with requirements in 40 CFR Part 264.147.

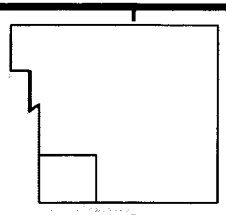

CLOSURE SCHEDULE (DAYS)

TRIASSIC PARK WASTE DISPOSAL FACILITY

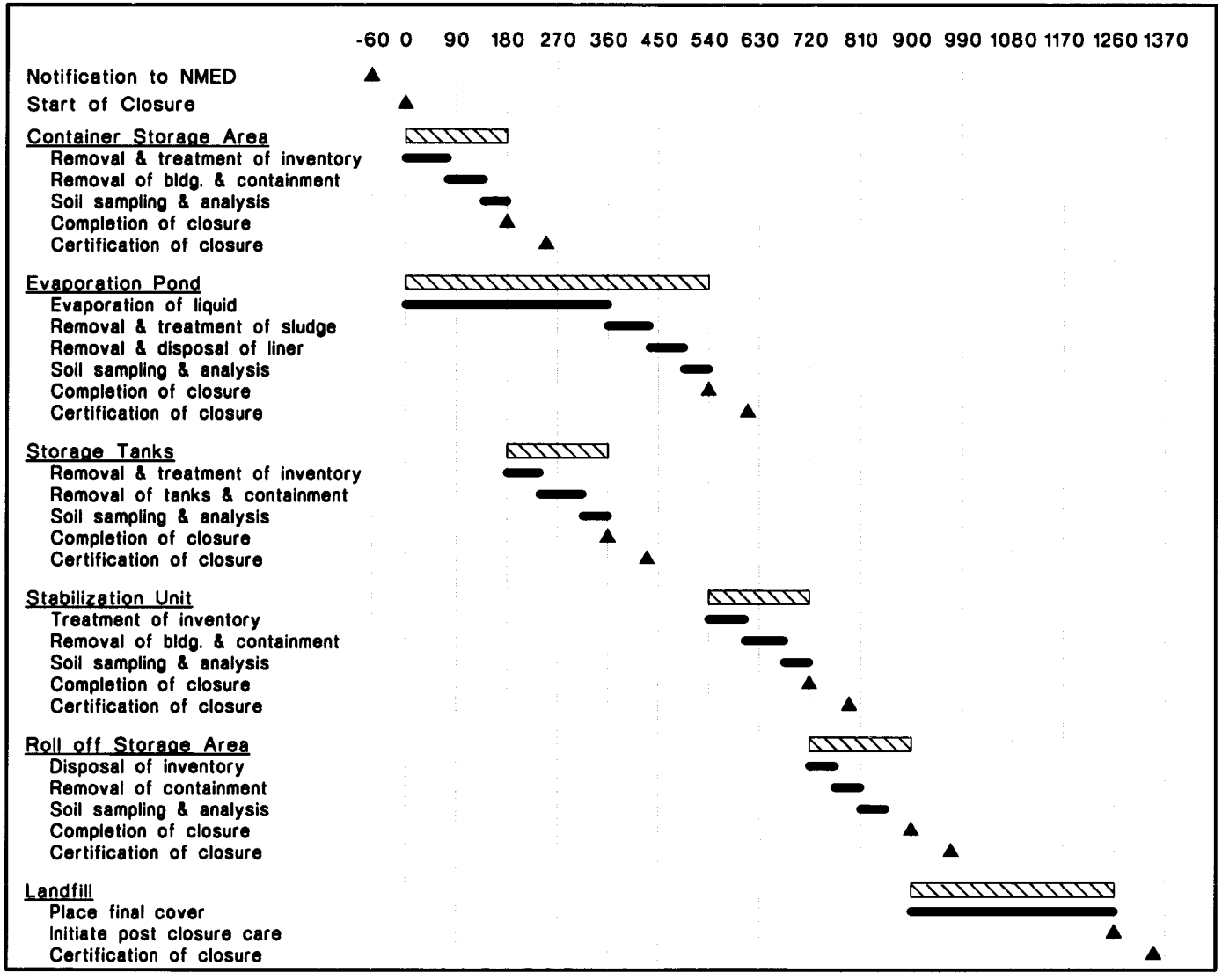

Figure 8-1

AutoCAD FILE: GANDY-FIG8.1

TABLE 8-1
CLOSURE COST ESTIMATES AND CLOSURE - GENERATED WASTE VOLUMES

Closure Activity	Inventory	Residual For Disposal In Landfill (tons)	Total Cost (1997$)
Disposal of Sludges			
1120 drums in Drum handling unit	309 tons + 494 tons reagent	803	$36,064
Sludge removed from Evaporation Pond	5661 tons + 9058 tons reagent	14,719	$652,208
4 Mixing Bins	400 tons + 639 tons reagent	1039	$46,674
Disposal of Liquids			
4 tanks @ 9,000 gal	1,530 tons reagent	1,692	$151,236
Liquid from Facility closure decontamination @ 23,000 gallons	978 tons reagent	1,083	$96,671
Disposal of Solids		**(yd^3)**	
Drum handling unit Pad and Subfloor		2740	$21,922
Evaporation Pond Subgrade		5,667	$45,333
Roll-off storage area Subgrade		5,444	$43,556
Total Waste Disposal Cost			**$1,093,664**
Facility Removal			
Remove Drum handling unit	N/A	N/A	$54,000
Remove Stabilization unit	N/A	N/A	$172,634
Total Removal Costs		**Backfill Volume (cy)**	**$226,634**
Area Backfill			
Evaporation Pond		32,185	$144,831
Drum handling unit		2,740	$12,330
Roll-off storage area		5440	$24,498
Total Backfill Costs			**$181,659**
Soil Sampling and Analysis			
23 Samples/$1100 per samples			**$25,300**
Total Sampling Cost			**$25,300**
Certification of Closure			
Inspections			$15,000
Reports			$20,400
Total Certification Costs			$35,400
Total Facility Closure Costs (Does Not Include Landfill)			**$1,562,657**

TABLE 8-1
CLOSURE COST ESTIMATES AND CLOSURE - GENERATED WASTE VOLUMES

Closure Activity	Inventory	Residual For Disposal In Landfill (tons)	Total Cost (1997$)
Landfill Closure			
Leachate Collection and Treatment during Closure			$536,160
Vadose Zone Monitoring			$49,460
Sampling and Analysis			$29,000
Final Plat Survey			$2,500
Subtotal Landfill Closure Costs			**$617,120**
Final Cover			**$2,502,783**
Certification of Final Closure for Landfill			**$29,180**
Total Landfill Closure Cost			**$4,682,560**
TOTAL FACILITY CLOSURE COST			**$4,711,740**

TABLE 8-2
LANDFILL POST-CLOSURE COST ESTIMATE

Post-Closure Items	Total Cost (1997 $)
Annual Post-closure Costs	
Facility inspection	$6,590
Routine maintenance and repairs	$32,940
Severe erosion damage repair	$1,260
Leachate pumping and treatment	$63,480
Leachate collection system inspection and maintenance	$730
Vadose zone system monitoring and maintenance	$38,070
Annual Subtotal	$143,070
30 Year Post-closure Subtotal	$4,292,100
One Time Post-closure Costs	
Notation on property deed	$840
Decontamination and demolition of treatment unit	$2,610
Certification of post-closure	$22,280
One Time Closure Cost Subtotal	$25,730
Subtotal Post-closure Cost	$4,317,830
Contingency (10%)	$431,783
Total	$4,749,613

9.0 WASTE MANAGEMENT

The purpose of this section is to describe the Facility Waste Minimization (WM)/ Pollution Prevention (P2) Program, which will be an organized, comprehensive, and continuous effort to systematically reduce waste generation during the life of the Facility. As such, the program will be ever-changing and expanding to incorporate new or more effective WM/P2 opportunities as they are developed. The level of detail in this description of the WM/P2 Program is commensurate with the level of detail currently available with respect to day-to-day operation of the Facility.

The Facility is committed to the prevention of all forms of pollution and the minimization of all wastes generated at its hazardous waste landfill. Source reduction of waste is the company's highest waste minimization priority, followed by recycling and reuse.

For an industrial facility, such as the Facility, a Waste Minimization Program is an important link to providing increased protection of public health, employee health, and the environment. As part of its WM/P2 Program, the Facility will develop a detailed WM/P2 Program Plan as soon as the intricate details of Facility operation are more clearly defined.

It is anticipated that only insignificant amounts of waste will be generated from site operations. Leachate and wastewater may be generated from the wastes placed in the landfill and from precipitation events. Other wastes that may be generated include waste oils and other maintenance wastes, office wastes, soil and debris from spills, personal protective equipment, excess chemicals, and freon. Not all of these wastes are expected to be hazardous. All site-generated waste will be stored, treated, recycled, reused, and/or disposed in accordance with applicable regulations. Waste minimization/pollution prevention efforts will be focused on all forms of waste, not just those wastes defined as hazardous in the New Mexico Hazardous Waste Management Regulations.

Waste minimization focuses on reducing the amounts and toxicity of waste materials generated from any process or other plant activity and on reusing, recycling, or reclaiming waste materials for future use and benefit. It should be noted that the terms waste minimization and pollution prevention will be used somewhat interchangeably throughout this section. However, the terms have distinctly different meanings, as defined below:

Waste Minimization

Waste minimization is the reduction, to the extent feasible, of the amounts and toxicity of waste materials after they are generated from any process or other activity. Primary waste minimization techniques include reuse, recycling, or reclamation of waste materials for future use and benefit.

Pollution Prevention

Pollution prevention is the use of any process, practice, or procedure to prevent the generation of waste. Examples of primary pollution prevention techniques include material substitutions (e.g., nonhazardous materials used in place of hazardous materials), process changes, and procedural improvements.

9.1 BRIEF HISTORY OF WM/P2 IN THE UNITED STATES

Current trends in environmental policy and regulation indicate a move from pollution control to pollution prevention and waste minimization in the private sector. Throughout the 1980s, the United States became increasingly aware of the environmental damage and restoration costs associated with past improper disposal of hazardous wastes. In the 1984 HSWA to RCRA, Congress declared that it is:

> *. . . the national policy of the United States that, wherever feasible, the generation of hazardous waste is to be reduced or eliminated as expeditiously as possible. Waste that is nevertheless generated, should be treated, stored, or disposed of so as to minimize present and future threat to human health and the environment. From HSWA, Congress clearly intended a hierarchy of actions for managing the nation's waste problems, with priority given to reduction or elimination of waste over treatment, storage, and disposal of waste after it has been generated.*

The Pollution Prevention Act of 1990 expanded this concept to include all forms of environmental pollution. This statute calls pollution prevention a "National Objective" and establishes a hierarchy of environmental protection priorities as national policy. The order of priority is summarized as follows:

1. Reduction or elimination of waste prior to generation (source reduction) is the best option.

2. Recycling and reuse of waste that is generated is the second best option in cases when pollution cannot be prevented.

3. Treatment (reclamation or toxicity reduction) of waste that is generated is the next best option in cases where feasible prevention and recycling opportunities are not available or possible.

4. Disposal of generated waste is the least desirable option.

9.2 PURPOSE AND OBJECTIVES OF THE FACILITY WASTE MINIMIZATION/POLLUTION PREVENTION PROGRAM

The purpose of this section is to describe the Facility WM/P2 Program. This Program will establish the strategic framework for integrating waste minimization and pollution prevention into all Facility activities. The objectives of the Program are the following:

- raising employee awareness about the reasons for and benefits of a WM/P2 Program and instilling a desire to minimize waste at the lowest organizational levels possible;

- describing planned initiatives that support and promote WM/P2 through various training opportunities, including recycling, reuse, and recovery programs, and good housekeeping practices;
- adapting and implementing existing technologies as rapidly as possible to reduce waste generation at the source and to recycle waste products; and,

- reducing all forms and categories of waste to the lowest extent practical.

9.3 BENEFITS OF THE FACILITY WASTE MINIMIZATION/POLLUTION

The Facility WM/P2 Program, like all effective waste minimization programs, will yield numerous benefits and advantages, which are either tangible or intangible. Some of these benefits are listed below:

- reduced waste management costs, including labor and disposal costs;

- reduced regulatory compliance costs, including inspection costs and possible fines;

- reduced raw material costs;

- reduced potential for releases of hazardous chemicals and wastes;
- increased worker safety; and,
- reduced civil and criminal liabilities under environmental laws.

9.4 ELEMENTS AND GOALS OF THE FACILITY WM/P2 PROGRAM

As previously mentioned, the Facility will continue to expand and refine its WM/P2 Program during the life of the Facility. The elements of the Program include those methods commonly used to form the baseline, or starting point, for effective WM/P2 Programs. The elements and goals of the Program are listed below as action-items to be completed during the initial phases of Facility operations. Such listings are standard practice in the industry since many of the elements, waste generation levels for example, cannot be determined until after the Facility begins operation. The personnel tasked with oversight of this program will also oversee the planning, development, and implementation of the WM/P2 reduction methods and activities outlined below.

- develop and establish a written policy statement that describes why the WM/P2 Program is being implemented, how it will be implemented, and who will implement it. The policy statement will be issued from the highest level of management. The policy will be provided to each employee at the start of employment and will be reviewed during RCRA training and annual refresher training;
- assign Facility personnel to oversee, plan, develop, and implement the elements of the WM/P2 Program;
- establish support for the program at all levels in the company;
- determine a waste generation baseline at the site and establish a tracking method and waste minimization goals;
- establish a procurement control program to ensure the purchase of environmentally friendly materials and products while preventing the procurement of prohibited items from the site; the Facility will endeavor to reduce or eliminate the use of hazardous materials from its operations;
- minimize the quantities of virgin products and raw materials allowed such as sorbents and other materials used in the stabilization process into the landfill. The Facility will endeavor to utilize other wastes (e.g., fly ash) in the stabilization process rather than virgin materials;
- establish reuse, recycling, recovery, and conservation programs to minimize the volume of generated waste requiring disposal or treatment; examples of such programs include paper, aluminum cans, cardboard, scrap metals, oil, batteries, and surplus materials and chemicals;
- establish good-housekeeping practices that promote WM/P2; an example of this type of practice is the requirement to remove packaging materials from chemicals, products, and equipment before they are introduced into the disposal area or contamination-control areas to avoid cross contamination;
- establish a WM/P2 awareness program and train employees, as appropriate;
- prepare a WM/P2 plan and update it annually or as appropriate;

- perform an assessment of waste minimization/pollution prevention opportunities; an example of this type of opportunity is: installation of air conditioning refrigerant reclamation systems; and,

- determine the feasibility of implementing the WM/P2 projects and proceed as appropriate with project implementation.

9.5 PROPOSED ELEMENTS OF THE FACILITY WM/P2 PROGRAM PLAN

The Facility will establish a WM/P2 Program Plan when operational details of the Facility, such as the chemical and equipment procurement processes and the actual level of waste generation, are determined. The WM/P2 plan will include the following elements, as appropriate:

- the written policy statement for WM/P2;

- a description of the roles and responsibilities of Facility personnel with respect to WM/P2 and a brief description of how Facility groups will work together to reduce waste generation and energy consumption;

- a plan or method for publicizing and gaining support for the program and communicating the successes and failures of waste minimization efforts (i.e., employee awareness program);

- a description of how employees will be informed about WM/P2 requirements and expectations (possibly within the context of other Facility training courses);

- a description of waste-generating processes, including a clear definition of the types and quantities of materials generated from each process;

- a description of recycling, reclamation, treatment, and disposal programs used by the Facility and the types of wastes and materials that are included in these programs;

- descriptions of other WM/P2 programs and initiatives;

- reporting requirements;

- a description of WM/P2 goals for the Facility;

- a description of the Facility's chemical and material procurement process;

- a review of the costs of waste management and disposal, both onsite and at other facilities;

- criteria for prioritizing candidate WM/P2 processes, activities, and waste streams for future implementation; and,

- an evaluation of the effectiveness of the WM/P2 Program and activities.

10.0 CORRECTIVE ACTION

It is unlikely that releases of hazardous waste or hazardous waste constituents have occurred on the site of the proposed Facility. This is based on an evaluation of (1) the site history; (2) walkdowns of the site conducted as part of site characterization activities; and (3) a records review, which are described in the following paragraphs.

The current property owner is Marley Ranches Inc. Marley Ranches has owned the property since 1967 and has used it primarily for grazing of livestock. The previous owner, owned the property for two generations. Under the previous owner the property was used primarily for grazing of livestock.

Site characterization activities included drilling programs conducted in July 1993, September 1993, and July 1994. The site was thoroughly walked down as part of the site characterization activities. No evidence of hazardous waste releases or hazardous constituents was observed.

New Mexico Oil Control Division records were reviewed. An intermittent land use in the area is exploratory drilling for oil and gas wells. The record review indicated that there are no abandoned wells within the proposed Facility boundary, and the nearest production well is approximately 3 miles from the proposed site. In addition, aerial photographs of the site were reviewed. The review did not provide any indication of releases or structures or activities that could be a source of releases.

The New Mexico Environment Department conducted a RCRA Facility Assessment (RFA) in 1995. An RFA Report was prepared in September 1995. The RFA report identified several potential future SWMUs, including:

- the drum handling unit;
- roll-off storage area;
- the liquid waste receiving and storage unit;
- the stabilization unit;
- the evaporation pond;
- the landfill;
- the truck wash unit;
- the maintenance shop;
- the chemical laboratory;
- the stormwater retention basin;
- the untarping, sampling, and weigh scales area;
- the truck staging area;
- the future debris encapsulation unit;
- the future waste processing area;

- all roads, including those leading to the Facility;
- the clay processing area; and,
- the dust control/clay processing water basin.

No releases have occurred at these areas of concern because the structures do not exist and no Facility activities have occurred. An RCRA Facility Investigation (RFI) will not be conducted unless evidence of a release from a MSW and C&D waste management unit is identified in the course of future groundwater or vadose zone monitoring, field investigation, environmental audits, or other means. The Facility will respond to any emergency in accordance with the Contingency Plan provided in Section 6.0, including notification and reporting. Specifically, any release which threatens human health or the environment must be reported to NMED within 24 hours of its detection, and any time the Contingency Plan is implemented, NMED will likewise be notified within 24 hours. However, in some cases, such as small amounts of materials being released from SWMUs into contained buildings or onto impervious surfaces that are immediately cleaned up, a release from a SWMU will not trigger reporting under the Contingency Plan. All releases and response actions will be documented in the Facility operating record. The following information will be provided:

- the location of the release to the environment relative to the SWMU;
- the type and function of the unit;
- the general dimensions, capacities, and structural description of the unit;
- the period during which the unit was operated;
- information on the wastes that have been or are being managed at the SWMU; and,
- results of any sampling and analysis to determine whether releases of hazardous waste or hazardous waste constituents have occurred or may occur.

The Facility will also notify the administrative authority verbally, within 24 hours of discovery, of any release of hazardous waste or hazardous waste constituents that has the potential to migrate off site. The Facility will take immediate action to protect human health and the environment unless the Facility is unable to obtain access to a release that has migrated off site.

Additionally, when a release has occurred, an RFI will be conducted. The purpose of the RFI is to determine the extent and nature of releases of hazardous waste and hazardous waste constituents. The RFI consists of the following four tasks:

- review of pertinant literature and documentation;
- preparing of the RFI Work Plan;
- conducting the investigation; and,
- preparing the Final Report and Summary.

Interim measures may be taken at any time during the period of investigation.
The results of the RFI may indicate that no further action is required. At this point, the Gacility will write NMED requesting a Class III permit modification to remove the subject SWMU from the permit. However, if the RFI indicates that a SWMU has released hazardous waste or hazardous waste

constituents that pose a concern to human health or the environment, a Corrective Measures Study (CMS) will be required. A CMS consists of three tasks:

- preparing a CMS Plan;
- conducting the CMS; and,
- preparing a CMS Final Report and Summary, which includes a preferred alternative and a schedule for implementation.

The RCRA permit will be modified to include appropriate corrective action requirements.

11.0 40 CFR 264 SUBPART AA & BB REGULATIONS

This section provides a brief summary of the air requirements, as presented in 40 CFR 264 subpart AA and BB. In addition, this section provides a brief summary of other regulations which may be applicable to the Facility.

11.1 40 CFR 264 SUBPART AA

The Facility will not be subject to the 40 CFR 264 Subpart AA regulations because the Facility will not utilize distillation, fractionation, thin-film evaporation, solvent extraction, air or steam stripping operations.

11.2 40 CFR 264 SUBPART BB

Because wastes with organic concentrations greater than 10 percent by weight will not be accepted for storage in the liquid waste storage unit, treated in the evaporation pond, or treated in the stabilization unit, these units will not be subject to 40 CFR 264 Subpart BB regulations. Therefore, equipment such as pumps, compressors, pressure relief devices, sampling equipment, connecting system, and valves will not contain or contact hazardous wastes with organic concentrations of 10 percent or greater by weight.

11.2.1 Equipment List

An equipment list will be prepared and kept in the operating log that includes equipment identification numbers, hazardous waste management unit identification numbers, approximate location of the equipment at the Facility, type of equipment, percent by weight total organics, hazardous waste state, and method of compliance with the appropriate standard in 40 CFR 264.1052 through 40 CFR 264.1062 for all equipment subject to Subpart BB requirements.

11.2.2 Equipment Controls

During final design of the Facility, consideration will be given to applying the following equipment controls for fugitive emissions sources:

- leakless technology for valves and pumps;
- plugs, caps, blinds, etc. for open-ended lines;
- rupture disks and soft seats for pressure relief devices;
- dual mechanical seals with barrier fluids/degassing vent systems for rotary equipment; and,
- closed-loop sampling systems.

If the above equipment is utilized, no inspection or monitoring is required.

11.2.3 Equipment Marking

Each piece of affected equipment will be marked after the tank system is installed in such a manner that it can be readily distinguished from other pieces of equipment. Such marking will include hanging a plastic or metal tag on the equipment. The tags will provide the equipment identification number for each piece of affected equipment.

When a leak is detected, the equipment also will be marked to identify it as leaking. The identification on a valve may be removed after it has been monitored for two successive months and no leak has been detected during this time. The identification on equipment other than a valve may be removed after it has been repaired.

11.2.4 Leak Detection and Repair

A leak detection and repair program will be developed that includes the following elements:

- weekly visual monitoring of pumps in light liquid service in accordance with 40 CFR 264.15;
- monthly monitoring of pumps and valves in light liquid service in accordance with Reference Method 21 in 40 CFR 60;
- monitoring of pumps and valves in heavy liquid service, pressure relief devices in light liquid or heavy liquid service, and flanges and other connectors in accordance with Reference Method 21 in 40 CFR 60 within five days of discovery of evidence of a leak;
- compliance with other standards found in 40 CFR 264.1052 through 264.1062, as appropriate;
- utilization of alternative standards for valves in light liquid service (percentage of valves allowed to leak or skip period leak detection) if operating experience demonstrates that such alternatives are appropriate; and,
- repair of leaks in accordance with standards in 40 CFR 264.1052 through 264.1062.

11.2.5 Record Keeping and Reporting

Record keeping will be conducted in accordance with requirements in 40 CFR 264.1064.

Records that will be kept in the Facility operating record include:

- the equipment list discussed in Section 11.2.1;
- results of weekly inspection of pumps;
- results of monthly monitoring of pumps and valves;
- other records required to demonstrate compliance with standards in 40 CFR 264.1052 through 264.1062, as necessary;
- records that demonstrate compliance with the alternative standards for valves in light liquid service, if such standards are utilized;
- information regarding leaks and repairs;
- information regarding equipment designated as having no detectable emissions;
- justification for valves designated as unsafe to monitor or difficult to monitor;

- criteria for failure of seal system or barrier system or both if an exemption from 40 CFR 264.1052(a) is being sought using a dual mechanical seal system that includes a barrier fluid system, and,

- information on other equipment for which exemptions are sought and justifications for the exemptions.

The Facility will provide a semi-annual report to the U.S. Environmental Protection Agency and New Mexico Environment Department if any leaks from valves, pumps, and compressors are not repaired as required in 264.1057(d), 264.1052(c) and (d), or 264.1053(g) and if any hazardous waste management unit shutdowns occurred within that semi-annual reporting period.

11.3 40 CFR 264 SUBPART CC

The Facility will not be subject to the Subpart CC requirements for tanks and evaporation ponds because these units will not be used to manage wastes containing volatile organic concentrations greater than 500 parts per million by weight (ppmw).

Fifty-five gallon drums and roll-off containers may hold hazardous waste that contains greater than 500 ppmw volatile organic compounds. All 55-gallon drums and roll-off containers stored at the Facility will have covers and meet DOT requirements or packaging of hazardous waste for transport under 49 CFR 178. Therefore, no additional controls will be required for 55-gallon drums or roll-off containers.

11.3.1 Waste Determination

A waste determination will only be conducted for each waste stream to be placed in a unit that is exempt from the Subpart CC requirements for air emission controls (e.g. the evaporation pond). The waste determination shall be made at the point where the Facility first takes possession of the waste. In general, the Facility will use generator-supplied information (manifests, shipping papers, certification notices etc.) prepared in accordance with 40 CFR 265.1084(a)(5) and (a) to make this determination, however, the Facility may choose to test a representative sample of the waste. For waste to be placed in units that comply with Subpart CC requirements for air emission controls, no formal waste determination is required.

11.3.2 Applicability to Containers

There are two types of containers expected to be used at the Facility to store wastes: (1) 55-gallon drums and (2) roll-off containers. These containers may hold hazardous waste that contains greater than 500 ppmw volatile organic compounds. All 55-gallon drums and roll-off containers stored at the Facility will have covers and meet DOT requirements for packaging of hazardous waste for transport under 49 CFR 178. Therefore, no additional controls will be required for 55-gallon drums or roll-off containers.

11.3.3 Applicability to the Evaporation Pond

The Facility will not accept waste to be placed in the evaporation pond that contains greater than 500 ppmw volatile organics. Therefore, the evaporation pond is exempt from air emission control requirements specified in Subpart CC.

- if the Facility becomes aware that an exempt unit has received hazardous waste containing greater than 500 ppmw volatile organic compounds, the regulatory agency will be notified within 15 days; and,

- if continuous emission monitoring is used, a semi-annual report will be provided that indicates each time the monitoring is operated in non-compliance over a 24 hour (or more) period of time. This report will not be provided if the monitoring system remains in compliance during the entire 6-month reporting period.

11.4 OTHER APPLICABLE REGULATIONS

There are a number of other federal regulations which will apply to the Facility. Once the Facility has received a final permit and the configuration and operational aspects are finalized (it is possible that some minor changes to the Facility configuration and operation will occur as a result of the final permit) other regulations will be evaluated. Some of the regulations that will be evaluated are:

- National Pollution Discharge and Elimination System;

- Clean Water Act;

- Clean Air Act; and

- Occupational Safety and Health Administration regulations.

The regulations listed above will be evaluated for their applicability to the Facility. In addition to these federal regulations, the Facility will evaluate numerous state, county, and local regulations. GMI will ensure that the Facility is designed, constructed, and operated in compliance with all applicable regulations.

12.0 REFERENCES

DOE, 1993. U.S. Department of Energy, *Preparation of RCRA Waste Analysis Plans (Interim Guidance);* Office of Environmental Guidance, March.

Eagleman, J.R., 1976. *The Visualization of Climate*, D.C. Health and Co., p.2

EPA, 1980. U.S. Environmental Protection Agency, *RCRA Personnel Training Guidance Manual for Owners and Operators of Hazardous Waste Management Facilities,* Washington D.C., September.

EPA, 1985. U.S. Environmental Protection Agency, *Guidance on Implementation of the Minimum Technological Requirements of HSWA of 1984, Respecting Liners and Leachate Collection Systems, Reauthorization Statutory Interpretation #5D,* EPA/530-SW-012 Washington, D.C.

EPA, 1985. U.S. Environmental Protection Agency, *Permit Applicants' Guidance Manual for Exposure Information Requirements under RCRA Section 3019,* Washington, D.C., July.

EPA, 1986. U.S. Environmental Protection Agency, *Guidance Manual: Cost Estimates for Closure and Post-Closure Plans (Subparts G and H), Vol I-II,* Washington D.C., November.

EPA, 1989. U.S. Environmental Protection Agency, *Requirements for Hazardous Waste Landfill Design, Construction, and Closure,* EPA/625/4-89/022, August.

EPA, 1992. U.S. Environmental Protection Agency, *Action Leakage Rates for Leak Detection Systems,* Washington, D.C., January.

EPA, 1992. U.S. Environmental Protection Agency, *Compilation of Current Practices at Land Disposal Facilities: Summary of Liner and Leak Detection Designs, Action Leakage Rates, Response Action Plans, and Management of Liquids in Landfills,* Washington, D.C., January.

EPA, 1992. U.S. Environmental Protection Agency, *Final Rule Published in the Federal Register, Liners and Leak Detection Systems for Hazardous Waste Land Disposal Units,* 52 FR 3462, January 29.

EPA, 1994. U.S. Environmental Protection Agency, *Waste Analysis at Facilities that Generate, Treat, Store, and Dispose of Hazardous Waste, A Guidance Manual,* Washington, D.C. April.

Fetter, C.W. 1988. *Applied Hydrogeology,* 2nd Edition, Columbus, Ohio: Merrill Publishing Co., 1988.

Freeman, H., Ed. 1989. *Standard Handbook of Hazardous Waste Treatment and Disposal,* McGraw-Hill Book Company.

Hunter, Regina L. 1985. *A Regional Water Balance for the Waste Isolation Pilot Plant (WIPP) and Surrounding Areas,* Sandia National Laboratories, Albuquerque, NM, December.

Knox, Robert, David A. Sabatine, and Larry W. Carter. 1993. *Subsurface Transport and Fate Processes.* Boca Raton, Florida: Lewis Publishers.

La Grega, Michael D. Et al. 1994. *Hazardous Waste Management,* McGraw-Hill, Inc.

Lightfoot, Karen. 1994. Endangered Species Botanist for the State of New Mexico, personal correspondence, June 7.

McGowen, 1979. *Depositional Framework at the Lower Dockum Group (Triassic).* Texas Bureau of Economic Geology, No. 97.

Pinkerton, Grant, 1994. Director of Planning and Environmental Services, Chaves County, New Mexico, personal correspondence, April 13.

Sivinski, Robert and Karen Lightfoot, 1992. Inventory of Rare and Endangered Plants of New Mexico. State of New Mexico Energy, Minerals, and Natural Resources Department - New Mexico Forestry and Resources Conservation Division. March.

Tchobanoglous, G., et al. 1993. *Integrated Solid Waste Management Engineering Principles and Management Issues,* McGraw-Hill, Inc.

Todd, David Keith. 1983. *Groundwater Resources of the United States,* Berkeley, California: Premier Press. 1983.

PART A AND PART B PERMIT APPLICATION

FOR THE

TRIASSIC PARK HAZARDOUS WASTE FACILITY

Volume III

Engineering Report
Appendix A - Drawings

December 1997
Revised November 1998

Prepared By:

Stoller
established 1959
The S.M. Stoller Corporation
1717 Louisiana Blvd., N.E., Suite 209
Albuquerque, New Mexico 87110
(505) 255-8200

and

TerraMatrix
MONTGOMERY WATSON
Natural Resources Group

1475 Pine Grove Road
P.O. Box 774018
Steamboat Springs, Colorado 80477

Prepared for:

TRIASSIC PARK WASTE DISPOSAL FACILITY
Post Office Box 827
1109 E. Broadway
Tatum, New Mexico 88267

ENGINEERING REPORT

TRIASSIC PARK WASTE DISPOSAL FACILITY
CHAVES COUNTY, NEW MEXICO

December 1997
Revised November 1998

Patrick G. Corser, P.E.
Project Manager

PATRICK G. CORSER
NEW MEXICO
12236
REGISTERED PROFESSIONAL ENGINEER

Prepared by:

TerraMatrix/Montgomery Watson
MONTGOMERY WATSON MINING GROUP
1475 Pine Grove Road, Suite 109
P.O. Box 774018
Steamboat Springs, Colorado 80477
(970) 879-6260

TABLE OF CONTENTS

Section No. **Page No.**

1.0 GENERAL 1-1

1.1 INTRODUCTION 1-1
1.1.1 Background 1-1
1.1.2 Objective and Scope 1-1
1.1.3 Report Organization 1-2
1.2 REGULATORY CRITERIA AND GUIDANCE 1-2
1.3 SUMMARY OF GEOLOGIC AND HYDROLOGIC CONDITIONS 1-2
1.3.1 Regional Conditions 1-3
1.3.2 Site Geology 1-3
1.3.3 Site Hydrogeology 1-3
1.4 ADDITIONAL FIELD AND LABORATORY STUDIES 1-3
1.5 SUMMARY OF CLIMATALOGICAL DATA 1-3

2.0 GENERAL FACILITY DESIGN ELEMENTS 2-1

2.1 GENERAL FACILITY DESIGN ELEMENTS 2-1
2.1.1 General 2-1
2.1.2 Facility Layout 2-1
2.1.3 Facility Traffic Plan 2-2
2.1.4 Facility Stormwater Control 2-4
2.2 GENERAL FACILITY DESIGN ANALYSES 2-6
2.2.1 Road Designs 2-6
2.2.2 Facility Surface Water Control Design Analyses 2-6

3.0 LANDFILL 3-1

3.1 LANDFILL DESIGN 3-1
3.1.1 General 3-1
3.1.2 Landfill Layout and Phasing 3-1
3.1.3 Subgrade Excavation, Liner System, LCRS, LDRS, and Vadose Sump Design 3-2
3.1.4 Waste Filling Sequence 3-5
3.1.5 Interim and Final Covers 3-6
3.1.6 Landfill Stormwater Control Features 3-8
3.2 LANDFILL DESIGN ANALYSES 3-9
3.2.1 Slope Stability 3-9
3.2.2 Settlement 3-11
3.2.3 Geosynthetics Strength and Performance Analyses 3-12
3.2.3.1 Geomembranes 3-12
3.2.3.2 Geocomposites 3-12
3.2.3.3 Geotextiles 3-12
3.2.3.4 Geosynthetic Clay Liner 3-13
3.2.3.5 Geosynthetics Leachate Compatibility 3-13
3.2.4 Sump Compacted Clay Liner 3-14
3.2.5 Anchor Trench Design 3-14
3.2.6 Access Ramp Design 3-14
3.2.7 HELP Modeling 3-15
3.2.8 Leachate Collection and Removal, Leak Detection and Removal, and Vadose Monitoring System Hydraulic Analyses 3-16
3.2.9 Action Leakage Rate and Response Action Plan 3-17
3.2.10 Surface Water Drainage Analyses 3-17
3.2.11 Soil Erosion Analyses 3-18

Section No. **Page No.**

3.2.12 Frost Protection *3-18*
3.2.13 Earthwork Volumetrics *3-18*

4.0 EVAPORATION POND **4-1**

4.1 EVAPORATION POND DESIGN 4-1
4.1.1 General *4-1*
4.1.2 Evaporation Pond Layout and Phasing *4-1*
4.1.3 Subgrade Excavation, Liner System, LDRS Sump Design and Vadose Monitoring Sump Design *4-2*
4.1.4 Evaporation Pond Discharge Pad Arrangement *4-3*
4.2 EVAPORATION POND DESIGN ANALYSES 4-4
4.2.1 Slope Stability *4-4*
4.2.2 Settlement *4-4*
4.2.3 Geosynthetics Strength and Performance Analyses *4-4*
4.2.3.1 Geomembranes 4-5
4.2.3.2 Geonets 4-5
4.2.3.3 Geotextiles 4-5
4.2.4 Compacted Clay Liner *4-6*
4.2.5 Anchor Trench Design *4-6*
4.2.6 Leak Detection and Removal and Vadose System Hydraulic Analyses *4-6*
4.2.7 Action Leak Rate and Response Action Plan *4-6*
4.2.8 Frost Protection *4-7*
4.2.9 Earthwork and Pond Volumetrics *4-7*

5.0 TRUCK ROLL-OFF AREA **5-1**

5.1 TRUCK ROLL-OFF AREA DESIGN 5-1
5.1.1 General *5-1*
5.1.2 Truck Roll-Off Area Layout *5-1*
5.1.3 Subgrade Excavation, Liner System, Drainage Sump Design, and Leak Detection and Removal System Design *5-1*
5.2 TRUCK ROLL-OFF AREA DESIGN ANALYSES 5-3
5.2.1 Geosynthetics Strength and Performance Analyses *5-3*
5.2.1.1 Geomembranes 5-3
5.2.1.2 Geocomposite 5-3
5.2.1.3 Geotextiles 5-3
5.2.2 Anchor Trench Design *5-4*
5.2.3 Stormwater Collection Sump and Leak Detection Sump Containment Hydraulic Analyses *5-4*

6.0 STABILIZATION UNIT **6-1**

6.1 STABILIZATION UNIT DESIGN 6-1
6.1.1 General *6-1*
6.1.2 Stabilization Unit Layout *6-1*
6.1.3 Bin Liner, Bin Vault, and Floor Design *6-2*
6.1.4 Stabilization Process Design *6-2*
6.2 STABILIZATION UNIT DESIGN ANALYSES 6-4
6.2.1 Stabilization Bin Structural Analyses *6-4*
6.2.2 Stabilization Unit Concrete Vault *6-5*
6.2.3 Stabilization Unit Concrete Floor *6-5*
6.2.4 Stabilization Process Analyses *6-6*

7.0 DRUM HANDLING UNIT **7-1**

7.1 DRUM HANDLING UNIT DESIGN 7-1

7.1.3 Subgrade Excavation, Liner System, Leachate Collection Sump, and Leak Detection Sump Design *7-2*
7.2 DRUM HANDLING UNIT DESIGN ANALYSES 7-4
7.2.1 Geosynthetics Strength and Performance Analyses *7-4*
7.2.1.1 Geomembranes 7-4
7.2.1.2 Geonet 7-5
7.2.1.3 Geotextiles 7-5
7.2.1.4 Anchor Trench Design 7-5
7.2.2 Drum Handling Unit Concrete Floor *7-5*

8.0 LIQUID WASTE STORAGE UNIT 8-1

8.1 LIQUID STORAGE UNIT DESIGN 8-1
8.1.1 General *8-1*
8.1.2 Unit Layout *8-1*
8.1.3 Tank Leakage Containment Design *8-1*
8.2 LIQUID WASTE STORAGE UNIT DESIGN ANALYSES 8-2
8.2.1 Tank Design, Testing, and Quality Control Standards *8-2*
8.2.2 Pumping and Piping *8-2*
8.2.3 Concrete Tank Pad *8-2*

9.0 TRUCK WASH UNIT 9-1

9.1 TRUCK WASH UNIT DESIGN 9-1
9.1.1 General *9-1*
9.1.2 Facility Layout *9-1*
9.1.3 Subgrade Excavation, Liner System, Sump and Leak Detection System Design *9-2*
9.2 TRUCK WASH UNIT DESIGN ANALYSES 9-4
9.2.1 Geosynthetics Strength and Performance *9-4*
9.2.2 Tank Design, Testing, and Quality Control Standards *9-4*

10.0 REFERENCES 10-1

LIST OF TABLES

Table No.	Description	Page No.
1	Expected Vehicle Types	2-2
2	Landfill Sump Arrangement Summary	3-5
3	Landfill Phase 1A Material Balance and Ultimate Landfill Material Balance	3-19

LIST OF APPENDICES

Appendix	Description	
A	Design Drawings	
B	Construction Quality Assurance Plan	
C	Construction Specifications	
D	Laboratory Test Results	
E	Engineering Calculations	
	E-1	Cut Slope Stability
	E-2	Protective Soil Layer Stability
	E-3	Phase 1A Filling Plan Stability
	E-4	Ultimate Filling Plan Waste Stability
	E-5	Cover Stability
	E-6	Ramp Stability
	E-7	Evaporation Pond Slope Stability
	E-8	Prepared Subgrade Settlement
	E-9	Subgrade Settlement
	E-10	Effects of Different Settlement on Base Grades
	E-11	Waste Settlement
	E-12	Settlement Induced Stress in Geomembranes
	E-13	Geomembrane Stress Induced by Waste Settlement
	E-14	Evaporation Pond Clay Liner Settlement
	E-15	Anchor Trench Pullout Capacity
	E-16	Geomembrane Survivability
	E-17	Geomembrane Puncture Resistance in Landfill
	E-18	Geomembrane Puncture Resistance
	E-19	Geotextile/Geocomposite Survivability
	E-20	Geotextile/Geocomposite Filtration
	E-21	Puncture Resistance of Geotextile/Geocomposite
	E-22	GCL Material Properties
	E-23	Clay Liner Properties
	E-24	Wheel Loading on Access Ramp
	E-25	Frost Penetration
	E-26	Pipe Crushing
	E-27	Thermal Induced Stress in Evaporation Pond Liner
	E-28	HELP Modeling
	E-29	Facility Road Design
	E-30	Vertical Riser Down Drag
	E-31	Landfill LCRS Sump Flow
	E-32	Truck Roll-Off Area Sump Capacity
	E-33	Stabilization Bin Structural Analysis
F	Surface Water Control Plan	
	F-1	Sediment Demonstration
	F-2	Drainage Control
G	Action Leakage Rate and Response Action Plan	
	G-1	Landfill Action Leakage Rate
	G-2	Evaporation Pond Action Leakage Rate

1.0 GENERAL

1.1 INTRODUCTION

Gandy Marley Inc. (GMI) is submitting a RCRA Permit Application to construct and operate the proposed Triassic Park Waste Disposal Facility (Facility) (EPA ID NO. NM0001002484) to be located in Chaves County, New Mexico. This engineering report prepared by TerraMatrix/Montgomery Watson (TerraMatrix) presents the detailed design of the Triassic Park Waste Disposal Facility submitted in support of the Triassic Park Waste Disposal Facility RCRA Permit Application.

1.1.1 Background

In 1994, Gandy Marley Inc. contracted the S.M. Stoller Corporation to perform site characterization work and to prepare RCRA Permit Application for location of a hazardous waste treatment, storage and disposal facility on a 480 acre parcel of privately owned land located in Chaves County, New Mexico. The proposed site is located in Section 17 and 18 of R31E, T11S that lies approximately 42 miles east of Roswell, New Mexico and 36 miles west of Tatum, New Mexico.

In August 1994, Gandy Marley Inc. contracted with TerraMatrix to prepare preliminary designs for the various site facilities and to assist S.M. Stoller in the preparation of the RCRA Permit submittals. Since that time, S.M. Stoller and TerraMatrix have been working jointly to respond to comments and requests for additional information made by the New Mexico Environmental Department (NMED).

The facility design as presented herein is a product of several design iterations which incorporated additional information and design modifications as requested by NMED.

1.1.2 Objective and Scope

The primary objective of this report is to present the detailed design and engineering analyses required under current NMED regulations in support of the Triassic Park Waste Disposal Facility RCRA Permit Application. This engineering report presents detailed design drawings, construction specifications, construction quality assurance plan, surface water control plan, and supporting engineering analyses and laboratory studies applicable to the following site features and facilities:

- Site Arrangement
- Landfill
- Evaporation Pond
- Truck Roll-Off Unit
- Stabilization Unit
- Drum Handling Unit
- Liquid Waste Storage Unit
- Truck Wash Unit

The report also presents the landfill and evaporation pond action leakage rate and response action plan along with its supporting engineering analyses.

1.1.3 Report Organization

This report is organized into ten sections including this Section 1.0. Sections 2.0 through 9.0 describe the design elements and engineering analyses for the general site arrangement, the landfill, the evaporation pond, the truck roll-off unit, the stabilization unit, the drum handling unit, the liquid waste storage unit and the truck wash unit. Section 10.0 presents a list of references used in the report followed by the report appendices. Appendices A through G (Volumes III-VI) present the detailed design drawings, construction quality assurance plan, construction specifications, laboratory test results, engineering calculations, surface water control plan, and action leakage rate and response action plan.

1.2 REGULATORY CRITERIA AND GUIDANCE

The following Federal and State regulations, as well as Federal guidance documents were used in the design:

New Mexico Hazardous Waste Regulations, 20 NMAC 4.1;

Title 40 -- Code of Federal Regulations (40 CFR), Part 261, 262, 264; 268, & 270.

U.S. Environmental Protection Agency (US EPA), 1984. Permit Applicants Guide Manual for Hazardous Waste Land Treatment Storage and Disposal Facilities

U.S. Environmental Protection Agency, 1988. Lining of Waste Containment and Other Impoundment Facilities, Part 1 of 2 and Part 2 of 2.

U.S. Environmental Protection Agency, 1988. Seminar Presentations - Requirements for Hazardous Waste Landfill Design, Construction and Closure.

U.S. Environmental Protection Agency, 1996. Technical Guidance Document,. Construction Quality Assurance for Hazardous Waste Land Disposal Facilities.

United States Environmental Protection Agency, July, 1990. Seminars - Design and Construction of RCRA/CERCLA Final Covers, Washington, DC.

Additional supporting reference documents are presented in Section 10.

1.3 SUMMARY OF GEOLOGIC AND HYDROLOGIC CONDITIONS

Regional and site geologic and hydrologic conditions are discussed in the Triassic Park Waste Disposal Facility Permit Application (45). This site characterization work was performed by the S.M. Stoller Corporation and is based on a series of exploration drilling and test pit programs conducted at the site and review of New Mexico Oil Conservation Division well logs. One of the results of primary importance to this engineering report stemming from the site characterization report is the identification of the "most favorable area" for the location of the landfill. A brief summary of the site geologic and hydrologic conditions based on the Permit application is presented below.

1.3.1 Regional Conditions

The geologic formations present within the region where the Triassic Park Treatment, Storage, and Disposal Facility (Facility) is situated range from Quaternary through Triassic in age. These include Quaternary alluvium, Tertiary Ogallala Formation, and the Triassic Dockum Group. Permian sediments do not outcrop in this region.

1.3.2 Site Geology

Site stratigraphy generally consists of, from top down, 2 to 20 ft thicknesses of Quaternary alluvial materials; 30 to 100 ft thicknesses of Upper Dockum mudstones, siltstones, and sandy siltstones; and up to 600 ft thicknesses of Lower Dockum mudstones. Permeability testing of mudstone core samples were found to average 2.2 $x10^{-7}$ cm/sec and siltstones averaged 1 x 10^{-4} cm/sec (45).

Based on the regional geologic features, the potential for subsurface subsidence and the occurrence of sinkholes is considered negligible. In addition, there are no identified faults within the project area. The proposed site is located in a geologically stable area with low seismic activity potential. Design ground accelerations of 0.04 g were used in engineering evaluations presented in this report (1).

1.3.3 Site Hydrogeology

Permit Application Section 3.0, Volume I, provides a detailed discussion of the site geology and supporting investigation activities, as well as, site ground water characteristics and supporting ground water flow modeling. Based on these assessments, the "most favorable" area for the landfill construction was identified (see Figure 3-11 of Section 3.0, Volume I). The footprint for the proposed landfill generally conforms to the "most favorable" area. Cross sections shown on Drawing No. 7 (Volume III) show the landfill base and geologic foundation intercepts.

1.4 ADDITIONAL FIELD AND LABORATORY STUDIES

In addition to the site characterization drilling and test pitting programs described above, a test pit program to characterize near surface soil conditions and laboratory studies to identify geotechnical properties of the soils and proposed liner components was conducted. Appendix D, Volume V presents the results of the test pit program, soil index tests, and interface shear tests performed on the soil and geosynthetic liner materials.

1.5 SUMMARY OF CLIMATALOGICAL DATA

Site climatological data was obtained from the National Oceanic and Atmospheric Administration (NOAA) Class A recording station in Roswell, NM. Climate conditions of the area are typical of semi-arid regions characterized by dry, warm winters with minimal snow cover and hot, somewhat moister summers (45).

Moderate temperatures at the Facility are typical throughout the year with annual average temperatures near 60°F. Temperatures in December through February show a large diurnal variation, averaging 36°F at Roswell. On approximately 75 percent of the winter mornings, temperatures are below freezing, and afternoon maximum temperatures in the high fifties.

Afternoon winter temperatures of 70°F or more are common. Nighttime lows average near 23°F, occasionally dipping as low as 14°F. There are perhaps two or three winter days when the temperature fails to rise above freezing.

Precipitation is light and unevenly distributed throughout the year, averaging 10 to 13 inches. Winter is the season of least precipitation, averaging less than 0.6-inches of rainfall per month. Snow averages about 5 inches per year at the site and seldom remains on the ground for more than a day at a time because of the typically above freezing temperatures in the afternoon. Approximately half of the annual precipitation comes from frequent thunderstorms in June though September. Rains are usually brief but occasionally intense when moisture from the Gulf of Mexico spreads over the region. The site has a net evaporation potential with evaporation rates greatly exceeding rainfall. Monitoring records from the Bitter Lake monitoring station between 1951 in 1979 indicate an average evaporation rate of 93 inches per year.

Precipitation for the project area varies greatly from year to year. For example, Roswell's record low annual precipitation is 4.35 inches. The maximum 24 hour rainfall was 5.65 inches in October 1901. The record annual high is 32.92 inches. Most years are either "wet" or "dry"; few are "average". An average precipitation rate for Roswell, for a 107 year period from 1878 to 1982, is 10.61 inches per year.

The prevailing wind direction is from the south with a normal mean wind speed of 9.6 mph at Roswell.

2.0 GENERAL FACILITY DESIGN ELEMENTS

2.1 GENERAL FACILITY DESIGN ELEMENTS

2.1.1 General

General Facility design elements include the overall Facility layout, traffic plan, and site wide stormwater control design. This section describes the site layout and provides rationale for the individual unit locations and roadway network. In addition, the site wide stormwater control feature system is described.

2.1.2 Facility Layout

Drawing No. 4, (Volume III) illustrates the proposed locations of all site units including the site waste receiving, treatment, disposal, and storage units; the site maintenance area; soil stockpiles; surface water control features; water storage basins; and interconnecting access roadways. The location of these units is governed by the landfill layout and construction sequencing, existing roads leading to the Facility, existing topography and surface water drainage, and operational interactions between the waste storage, treatment, and disposal units. Additional rationale for individual unit locations are discussed in the paragraphs below.

Facility entrance and receiving areas including the security gate, administration trailer, truck untarping and sampling stations, chemical laboratory, and truck staging area are located near the Facility entrance in the northeast corner of the site. This arrangement facilitates site access security; incoming waste load inspection, sampling, testing, and weighing; and provides vehicle parking, truck staging, and emergency vehicle access.

Waste processing and storage areas include the drum handling unit, stabilization unit, liquid waste storage unit, and truck roll-off unit. These units are located north of the landfill access. This arrangement will minimize traffic interference between waste processing unit operations, landfill operations, and landfill construction activities. The drum handling unit and liquid waste storage unit are located closest to the Facility entrance because delivery vehicles to these units will not be required to access the landfill or other site units. The stabilization units is located in close proximity to the liquid waste storage unit, drum handling unit, truck roll-off unit, and landfill entrance to facilitate waste transfer operations between these units.

The evaporation pond and truck wash units are located to the northwest of the landfill. This arrangement allows trucks leaving the landfill, which need to be cleaned, to pass through the truck wash and exit the Facility via the northern-most roadway. The evaporation pond location provides space for future evaporation pond development and is located near the truck wash and the landfill leachate tank locations to reduce leachate haul distances.

The Facility maintenance shop area is located next to the truck wash because landfill operations equipment is typically cleaned prior to being serviced by the maintenance personnel. Earthmoving and construction equipment will be able to access the maintenance shop from the south thus reducing interference with site operations traffic and minimizing wear to the perimeter road surface. The stormwater detention basin is located in the northwest corner of the site because this is a natural low point to which clean run-off from the Facility will be directed. Stockpile and clay processing areas are located along the east side of the Facility.

These areas provide adequate soil storage space and allow construction equipment to operate separately from other site operations.

The landfill location is governed by subsurface geologic and hydrogeologic characterization discussed in Section 1.3.3.

2.1.3 Facility Traffic Plan

Drawing No. 26, (Volume III) illustrates the site roadway locations and grades, traffic flow directions, traffic control features, and emergency vehicle access lanes at the Facility entrance. Roadway locations are governed by locations and operations requirements. Expected vehicle types and volumes, proposed road types and their intended uses, traffic control features, and individual unit traffic patterns are discussed below. Road design analyses are discussed in Section 2.2.1.

Table 1, lists the types of vehicles, their gross vehicle weight, and estimated traffic volume per day which will travel on the site roadways. The traffic volumes shown in Table 1 are estimated based on an assumed waste receipt volume. Actual traffic volumes may vary.

TABLE 1
EXPECTED VEHICLE TYPES

Vehicle Type	Off Highway/On Highway	Gross Vehicle Weight (lb)	Estimated Traffic Volume (units/day)
Waste Haulers			
Roll-off Trucks	On Highway	< 100,000 lb	30-70
End Dump Trucks (Bulk Waste)	On Highway	< 100,000 lb	30-70
Tanker Trucks (Liquid Waste)	On Highway	< 100,000 lb	0-5
Semi Trailer Trucks (Drums)	On Highway	< 100,000 lb	0-5
Other Miscellaneous	On Highway	< 100,000 lb	0-5
Trucks	On Highway	< 100,000 lb	0-5
Site Operations Vehicles			
Vacuum Trucks	On Highway	< 100,000 lb	0-5
Tanker Trucks	On Highway	< 100,000 lb	0-5
Roll-Off Trucks	On Highway	< 100,000 lb	10-30
Flat Bed Trucks	On Highway	< 100,000 lb	0-5
Maintenance Vehicles	On Highway	< 100,000 lb	0-5
LF Waste Compactors	Off Highway	< 100,000 lb	0-2
Excavators	Off Highway	> 100,000 lb	0-2
Backhoes	Off Highway	< 100,000 lb	0-2
LF Scrapers	Off Highway	> 100,000 lb	0-2
Water Trucks	On Highway	< 100,000 lb	0-20
Front End Loader	Off Highway	< 100,000 lb	0-2
Fork Lifts	Off Highway	< 100,000 lb	0-2
Construction Vehicles			
Restricted to construction roads			
End Dump Trucks	Off Highway	< 100,000 lb	NA
Water Trucks	On Highway	< 100,000 lb	NA
Compactors	Off Highway	< 100,000 lb	NA
Graders	Off Highway	< 100,000 lb	NA
Dozers	Off Highway	< 100,000 lb	NA
Excavators	Off Highway	< 100,000 lb	NA
Employee Vehicles	On Highway	< 100,000 lb	30-50

Main Facility Roads

Drawing No. 26, (Volume III) identifies the extent of the main Facility roadways. These roads include the Facility entrance, north access road, south access road, and east and west landfill perimeter roads. Drawing No. 27, (Volume III) illustrates the road dimensions, drainage slope, and road surface and subbase material types and thicknesses to be used in construction. The main Facility road network will serve the majority of site traffic into and out of the landfill and the waste processing units. Construction equipment will typically be restricted to construction haul roads and the cut slope access ramp into the landfill.

Unimproved Access Roads and Temporary Construction Haul Roads

Unimproved access roads and temporary construction haul roads (not shown on the drawings) will be constructed as required by site operations and construction contractors. Access roads to the stormwater detention basin, soil stockpile areas, and along the site perimeter fence or along power lines are typical locations for these roads. In general, these roads will be constructed by removing loose materials and vegetation and compacting the underlying soils. No road surface gravels will be placed, however, provisions for surface water drainage, such as culverts and ditches, as well as, erosion control features will be included.

The truck staging area located at the south end of the Facility entrance will provide space for waste haul trucks awaiting disposal approval. This area will be surfaced with gravel and will drain to the surface water detention basin.

Parking areas for site personnel vehicles will be designated near the administration trailer, chemical laboratory, drum handling unit, stabilization unit, and maintenance shop area. These areas are also likely to be gravel surfaced.

Traffic Control Features

Traffic control features incorporated in the site traffic plan include the Facility entrance gate, stop signs, posted speed limits, and warning and informational signs. Temporary road dividers such as K-rails (also known as California rails) are also often used to separate two-way traffic in high volume areas. Stop sign locations, as shown on Drawing No. 26, (Volume III), will serve to control traffic at main roadway intersections and at the various waste processing unit entrances. Speed limits will be posted on all roadways. The main Facility road and unimproved access roads will be posted at 15 mph. Temporary construction haul roads will be posted at 35 mph. Additional signage will be posted to identify restricted areas, unit personal protection equipment (PPE) requirements, truck entrance areas, and unit names and access driveways.

Also shown on Drawing No. 26, (Volume III) are the emergency vehicle access lanes at the Facility entrance. These lanes will remain clear at all times.

Individual Unit Traffic Patterns

The drum handling unit entrance faces the north access road. Incoming trucks will enter the gravel lined apron and will back up to the loading dock areas. Once the truck unloading operation is complete, the trucks will exit the unit via the same north access road. Parking areas for site personnel vehicles will be designated near the drum handling unit office. The

gravel apron in front of the unit will not be used to stage waste haul trucks.

The stabilization unit has entrances for incoming trucks on both the north and south access roads. These accesses will be used for incoming waste trucks loaded with unstabilized waste for processing. Incoming trucks will enter the gravel lined apron on the north or south side of the unit and back into the stabilization building. Once the load has been dumped into the bin and the truck bed washed out, the truck will exit the unit via its entrance route. The east and west building entrances will be used by stabilized waste loadout trucks which will cycle between the truck roll-off unit or the landfill. The gravel lined areas surrounding the stabilization unit will not be used to stage waste haul trucks. Parking areas for site personnel vehicles will be designated near the stabilization unit office.

Access to the liquid waste storage area is provided on the east, west, and north sides of concrete tank pads. Tanker trucks can use either the north access road or the road to the east of the liquid waste storage area.

The truck roll-off area can be accessed via the north or south access roads.

The landfill design incorporates three access ramps. The two northern ramps will be used by waste haul trucks and landfill operations equipment. These 30 ft wide ramps will accommodate 2-way traffic when necessary, however, in general, the east ramp will be used for incoming traffic and the west ramp for exiting traffic. The third ramp located on the southern cut slope will provide access for earthmoving equipment involved with landfill expansion construction activities. Incoming waste haul trucks will be released from the truck staging area and use the south access road and northeast ramp to enter the landfill. Empty haul trucks will exit the landfill via the northwest ramp, pass through the truck wash unit, if necessary, and exit the site via the north access road.

Evaporation pond 1A and 1B truck discharge stations are accessible via the north and south access roads, respectively. Pond 1B will be used predominantly for day to day operations for incoming waste. However, the liquid levels in both ponds will be maintained at approximately the same level to maximize evaporation. Tanker trucks will enter pond 1B discharge station turnout from the west, discharge their load, and can exit the site via the north or south access roads.

2.1.4 Facility Stormwater Control

Facility stormwater control is provided in the design by a network of surface water run-on and run-off diversion ditches and detention basins. These ditches have been designed to collect and contain a 25-year, 24-hour storm event.

Site Vicinity Drainage Pattern

The proposed site is located on the far eastern flank of the Pecos River Basin. The land surface gently slopes to the west at approximately 40 to 50 feet per mile toward the river. The sloping plain is characterized by low relief hummocky wind-blown deposits, sand ridges, and dunes. The Caprock escarpment (or Mescalero Rim) is one of the most prominent topographic features in southeastern New Mexico. East of the proposed site, the escarpment has approximately 200 feet of relief. Up gradient sources of surface water flow are bounded by the Caprock escarpment. The watershed associated with the east diversion channel encompasses an

area of approximately 378 acres beginning at the Caprock escarpment and continuing down to the site's east property line.

Surface Water Run-On Diversion Channels

The east diversion channel located on the eastern edge of the landfill property line provides run-on control from the east watershed area. The remaining topography surrounding the site grades away from the site. The discharge location for this channel coincides with existing natural drainages to the north of the site as indicated on Drawing No. 25 (Volume III), sheet 1 of 2. The east diversion channel will remain in place after the cover system is constructed.

Surface Water Run-Off Channels

To control the run-off from the Facility, several collection ditches and culverts were designed to divert the peak discharge from a 25-year, 24-hour storm event to a stormwater detention basin. The location of the collection ditches (Ditch 1 through 6), culverts, and detention pond are shown on Drawing 25 (Volume III) sheet 1 of 2. Ditches 1 and 2 are located along the inside of the perimeter road at the toe of the final cover slope. The ditches divert run-off from the final cover to ditch 5 located at the northwest corner of the landfill. Ditches 3 and 4 run along the outside edge of the perimeter road. Ditch 3 collects the majority of runoff from the disturbed areas immediately to the east and north of the landfill footprint. Ditch 4 collects run-off from the west and south perimeter road. Both ditches also discharge to ditch 5 at the northwest corner of the landfill. Ditch 5 collects the run-off from ditches 1, 2, 3, and 4 and conveys it to the detention basin. Ditch 6 collects run-off from the facilities located near the entrance to the site and routes it to the detention basin.

Two ditches, Ditches 7 and 8, are located in the Phase I landfill (See Drawing 13, Volume III). These ditches are designed to divert runoff from unlined areas of the landfill to the clean water collection basin located in the south end of the landfill.

Surface Water Detention Basins

There will be three detention basins located on the site. The surface water detention basin located in the northwest corner of the site is shown on Drawing No. 25 (Volume III) sheet 1 of 2. The clean water collection basin located in the toe of the Phase 1A cut slope and the contaminated water basin, which will be located in the lined portion of Phase 1A and will extend from the waste fill slope to the clean water collection basin berm, are shown on Drawing No. 10 (Volume III).

Final Cover

The landfill final grading plan is shown on Drawing No. 22 (Volume III). An access road to the top of the landfill is located along the western side of the landfill. The surface water control ditch adjacent to the road will reduce erosion and control surface run-off of the cover. The ditch dimensions and details are shown on Drawings No. 25, sheet 2 of 2 (Volume III) and 27 (Volume III).

2.2 GENERAL FACILITY DESIGN ANALYSES

2.2.1 Road Designs

Drawing No. 27, (Volume III), illustrates the road dimensions, drainage slope, and road surface and subbase material types and thicknesses to be used in construction. Construction Specification Section 02225, (Appendix C, Volume IV), provides details regarding road construction materials and placement execution. Calculation No. E-29 presented in Appendix E, Volume evaluates the main facility road design and specification relative to the expected traffic conditions identified in Table 1. As described in the calculation, the main facility bearing capacity of 2,000 psf is suitable for the expected traffic loading above.

2.2.2 Facility Surface Water Control Design Analyses

All surface water calculations were conducted utilizing the SEDCAD+ computer model developed by Civil Software Design. Channels were sized based on the Mannings equation for open channel flow. The methodology and assumptions used in the design of the surface water control system are presented in Appendix F, Volume VI. Drawing No. 25, sheet 1 of 2 (Volume III) presents a layout of the surface water control plan and a schedule of channel and culvert dimensions and installation criteria.

Detention Basin Design Analyses

The surface water detention basin is designed to contain the stormwater discharge from the entire active site area given flows from a 25-year, 24-hour storm event. In order to assess the required size of the surface water detention basin, a worst-case stormwater volume discharge area was identified. The worst case scenario assumed that the final cover was in place and the run-off from the entire landfill footprint along with the run-off from the surrounding area are all diverted to the basin. The total drainage area is approximately 265.5 acres. Of the 265.5 acres 44 percent is assumed to be reclaimed and revegetated and the remaining 56 percent is considered to be disturbed. The total run-off was computed to be approximately 51.4 ac-ft. Total volume of the detention pond at the invert of the spillway is 66.1 ac-ft.

Erosion Control

Ditches with flow velocities less than 5 fps from a 25-year event will not require erosion protection. Ditches with peak flow velocities greater than 5 fps from a 25-year event but less than 5 fps from an average storm (2-year event) will also not utilize erosion protection. During average storm events these ditches should be stable, however, during major storm events the ditches may show signs of erosion in some areas. These areas will be repaired as required following all major storm events. Ditches with peak flow velocities greater than 5 fps from an average storm will be lined with gravel or riprap, as needed. All ditches are designed with 0.3 feet of freeboard.

To minimize sediment transport to receiving streams the east ditch will be lined with gravel. The ditch was designed with 0.3 feet of freeboard A riprap apron will be constructed at the end of the east ditch to dissipate the flow before entering the natural channel to help reduce erosion. The location of the apron is shown on Drawing No. 25, sheet 1 of 2 (Volume III). Details of the apron is shown on Drawing No. 25, sheet 2 of 2, (Volume III). Design calculations are shown in Appendix F, Volume VI. Ditches 7 and 8, which direct clean water

runoff on the side slope of the landfill into the water collection basin, will be lined with a high density polyethylene (HDPE) liner.

3.0 LANDFILL

3.1 LANDFILL DESIGN

3.1.1 General

Landfill design elements include ultimate and interim landfill layout and phasing; subgrade design; liner system design; and leachate collection system, leak detection system, and vadose monitoring sump design. This section describes each of these design elements.

3.1.2 Landfill Layout and Phasing

The proposed landfill footprint illustrated on Drawing No. 4 (Volume III), generally conforms to the most favorable area as previously described. The landfill footprint is divided into three phases (Phase I, Phase II, and Phase III) with each phase having a separate leachate collection, leak detection, and vadose detection system. These phases will be further subdivided based on development sequencing and landfill waste receipt rates. Landfill development will proceed from north to south in Phases I and II while Phase III will most likely be constructed in its entirety. The limits of Phase IA, the first area of the landfill to be developed, is shown on Drawing Numbers 8, 9, and 10 (Volume III). Details of the ultimate landfill configuration and the Phase 1A configuration are discussed below.

Ultimate Landfill Configuration

Drawing Nos. 6, 7, and 22 (Volume III), illustrate the ultimate configuration of the landfill. The landfill footprint defined by the crest line encompasses approximately 101 acres. The final cover area, which will extends 20 ft beyond the crest line, is approximately 107 acres. As shown in Drawing No. 23 (Volume III), no waste will be placed outside of the crest line of the landfill and leachate percolating vertically through the waste mass will be contained by the slope and floor liner systems.

The subsurface, or basal, portion of the landfill will be excavated to a depth of approximately 100 ft. At this depth, the floor and sumps of the landfill will be located in the Lower Dockum Unit (Drawing No. 7, Volume III). All side slope angles are 3 horizontal: 1 vertical (3H:1V) and the base in each landfill phase grades approximately 3 percent with a minimum of 2 percent towards its respective sump area. The basal liner system anchor trench is located approximately 4 ft beyond the crest of the landfill (Drawing No. 12, Volume III). Sumps are located at convenient locations in each phase to allow for subphase landfill development, to provide space for access ramps, and to maintain leachate collection system flow lengths capable of detecting a leak in a timely manner.

As shown on Drawing Nos. 7 and 22 (Volume III), the final cover system will reach a maximum elevation of approximately 4,205 ft. The cover system will crest at the mid-point of the landfill and will slope at 6 percent outwards. Slopes around the perimeter of the landfill will be 4H:1V.

Phase 1A Landfill Configuration

Phase 1A landfill development is illustrated on Drawing Nos. 8, 9, 10, and 11 (Volume III).

The basal liner system will cover the entire north 3H:1V slope, the slopes below the access ramps, and most of the Phase 1A floor. Waste placement will occur only on lined areas as shown on Drawing No. 10 (Volume III).

Landfill access ramps located on the east and west sides of Phase 1A grade at 10 percent from the crest to the floor surface. The 30 ft wide ramps can facilitate two way traffic. Drawing No. 14 (Volume III), illustrates the access ramp cross sections when waste placement takes place below the ramps and when waste placement takes place above the ramps.

Drawing No. 13 (Volume III), shows slope run-off diversion ditches located along the access ramps that discharge into a collection basin positioned at the toe of the cut slope. This temporary stormwater control feature will collect run-off from unlined slope areas above the access ramp and from the cut slope area during Phase 1A waste filling and will be separated from Phase IA by a berm which is illustrated in Drawing No 24 (Volume III). Clean water collected in the basin may be used for dust control within the landfill or may be pumped out of the basin and discharged into the site surface water control system.

3.1.3 Subgrade Excavation, Liner System, LCRS, LDRS, and Vadose Sump Design

Subgrade Excavation

Drawing No. 6 (Volume III) shows the landfill excavation and structural fill contours. The crest of the landfill generally follows the site's surface topography which grades from the southeast to the northwest. Fill areas along the south and west sides of the landfill combined with cut areas along the landfill's north side provide sufficient grade differences for perimeter drainage ditches to move stormwater run-off to the detention basin located in the northwest corner of the site. Drawing No. 5 (Volume III) indicates the initial cut and fill areas that would be required for the initial site development. This would require grading around the perimeter of the landfill and in the waste processing areas.

Specification Section No. 02110, Volume IV, describes site preparation, excavated soil classification and stockpiling, subgrade surface preparation and inspection, structural fill placement and compaction requirements, survey and quality control, and erosion control features.

Liner System

Drawing No. 12 (Volume III) shows the landfill liner components intended for the floor, slopes, and anchor trench areas. The landfill liner system is a double lined system consisting of (from bottom up) a prepared subgrade, geosynthetic clay liner (secondary liner), geomembrane (secondary liner) geocomposite (secondary drainage layer) geomembrane (primary liner) geocomposite (primary drainage layer) and a protective soil layer. Details of each component are discussed below:

- *0.5 foot thickness of prepared subgrade*

  The prepared subgrade component will provide a smooth stable surface suitable for placement of overlying geosynthetic materials. Specification Section 02119, Volume IV presents subgrade material requirements including particle size and

moisture content, placement and compaction requirements, and survey and field quality control requirements.

- *16-foot wide compacted clay liner (CCL) around landfill perimeter*

  During excavation, alluvial sands will be exposed around the perimeter of the landfill to depths ranging from 2 to 10 feet. As shown on Drawing No. 23, (Volume III) a 16 foot thickness of this sand material will be removed and replaced with a CCL component. The purpose of the CCL is to provide the liner with enhanced water barrier qualities in the alluvial sand areas. The CCL will be extended into the Upper Dockum Unit to a depth of at least 2 feet. The CCL ($k \leq 1 \times 10^{-7}$ cm/sec) in combination with the overlying GCL described below will serve as a low permeability barrier layer to restrict infiltration of leachate into the subgrade. The CCL will consist of clay material (CL or CH) obtained during excavation of the landfill and evaporation pond. Specification Section 02221, describes clay material requirements including particle size and moisture content, placement and compaction requirements, and survey and field quality control requirements.

- *Geosynthetic Clay Liner (GCL)*

  The GCL will serve as a low permeability ($k \leq 5 \times 10^{-9}$ cm/sec) barrier layer to restrict infiltration of leachate into the subgrade. The GCL type used will consist of bentonite granules sandwiched between two layers of geotextile. Specification Section 02780, describes minimum GCL properties required, subgrade preparation and inspection, material transportation and handling procedures, deployment and seaming requirements, and material construction quality assurance.

- *60-mil thick high density polyethylene (HDPE) geomembrane liner (textured on both sides)*

  The 60-mil HDPE geomembrane placed on top of the GCL is the second component of the secondary liner. Together, the GCL and HDPE geomembrane form a highly efficient barrier layer to restrict percolation of leachate into the subgrade (see Section 3.2.7). HDPE geomembrane texturing increases the friction angle between the geomembrane and the underlying and overlying elements. Specification Section 02775, describes minimum geomembrane properties required, subgrade preparation and inspection, material transportation and handling procedures, deployment and seaming requirements, and material construction quality assurance. Section 3.2.1, discusses slope stability analyses for the landfill liner system.

- *Geocomposite leak detection and removal system (LDRS) (transmissivity $\geq 2.2 \times 10^{-4}$ m^2/sec as tested under actual field conditions) consisting of*:

  * A 7 oz. geotextile (non-woven)
  * A geonet
  * A 7 oz. geotextile (non-woven)

The high transmissivity geocomposite, which is the leak detection and removal layer, provides a means to transmit and remove leachate percolating through any leaks in the primary geomembrane above. The upper and lower geotextiles of the geocomposite serve to filter sediments from the leachate and cushion the geomembranes, respectively. Flow calculations discussed in Section 3.2.8 and presented in Appendix G, Volume VI indicate that the geocomposite, in combination with the centrally located 8 inch diameter drain pipe, are capable of removing leachate in a timely manner such that head on the underlying geomembrane will remain less than 1 foot. Specification Section 02710, describes minimum geocomposite properties required, material transportation and handling procedures, deployment and seaming requirements, and material construction quality assurance (CQA).

The arrangement for the 8 inch diameter drain pipes and surrounding drainage gravel and filter geotextile, which are located in the floor of the leak detection and removal system, are illustrated on Drawing No. 12 (Volume III). Specification Section 02714, Filter or Cushion Geotextile, describes minimum geotextile properties required, material transportation and handling procedures, deployment and seaming requirements, and material CQA.

Calculations demonstrating the leak detection and removal system performance capabilities are presented in Section 3.2.7 and Section 3.2.8.

- *60-mil thick HDPE geomembrane (textured on both sides)*

This HDPE geomembrane serves as the primary liner of the double liner system. Specification Section 02775, discussed above also applies to this geomembrane layer.

- *Geocomposite leachate collection and removal drainage layer (transmissivity $\geq 2.2 \times 10^{-4}$ m^2/sec as tested under actual field conditions) consisting of :*

  * A 7 oz. geotextile (non-woven)
  * A geonet
  * A 7 oz. geotextile (non-woven)

This geocomposite layer serves as the leachate collection and removal system (or primary geocomposite). Leachate percolating through the overlying waste fill will drain through the geocomposite to the central drain pipe and then flow to the leachate collection sump where it will be removed via the slope riser pipes. This material is the same used in leak detection and removal system. The floor drain pipe arrangement is also the same.

Primary geocomposite flow calculations are presented in Appendices E (Calculation No E-28) and G, Volume VI, and the performance demonstrations are provided in the HELP Modeling discussed in Section 3.2.7.

- *2-foot thick protective soil layer*

  A 2-foot thick protective soil layer will be placed above the leachate collection and removal system. The protective soil layer will extend over all lined floor and side slope areas. The purpose of the soil layer is to protect the underlying geosynthetics from damage due to vehicle traffic or from waste debris settlement. Specification Section 02232 describes material requirements including particle size, placement requirements, and survey and field quality control requirements.

Leachate Collection and Removal, Leak Detection and Removal, and Vadose Monitoring Sump Systems

The leachate collection and removal system (LCRS), leak detection and removal system (LDRS), and vadose monitoring systems each have a separate sump from which fluids can be collected and removed. The liner system on the landfill floor continue into the sumps, however, in order to provide adequate volume to efficiently operate removal pumps, a gravel layer is incorporated into each system. Also, because liquids may be present, clay soil liner components have been added below the primary geomembrane liner and below the secondary GCL liner. These clay soil liner elements are added to enhance the barrier qualities of the liner elements in the sump. Drawings describing the sump arrangements in Phase 1A include Drawing Nos. 15, 16, 17, and, 18 (Volume III). As shown on the drawings, the sumps are square pyramidal shapes which lie concentrically above one another. The LCRS, LDRS and Vadose side slope pipes enter their respective sumps at the sump base and are horizontally offset to provide adequate space for the pipe trenches. The pipe trench arrangement enables the vadose and leak detection pipes to penetrate overlying geosynthetic liner elements at the crest of the landfill rather than in the sump area. The LCRS pipe lies on top of the primary geomembrane and therefore no liner penetration is required. Table 2 below lists the dimensions, volumes, flow capacity, slope riser pipe dimensions, pump type and capacity, and fluid level instrumentation included in each of the sumps.

TABLE 2
LANDFILL SUMP ARRANGEMENT SUMMARY

	LCRS	LDRS	VADOSE
Fluid Capacity[1] (gallons)	102,900	16,840	1,965
Pipe Dimensions (length/diameter)	30 ft/18 in	15 ft/18 in	10 ft/12 in
Flow Capacity[2] (gallons per day)	618,480	135,400	For Detection
Pump Type/Capacity[3] (gallons per minute (gpm))	Grundfos/50 gpm	Grunfos/50gpm	Grunfos/20 gpm
Fluid Level Instrumentation	Yes	Yes	Yes

Notes:
[1] 0.3 x neat volume accounts for gravel space
[2] Determined from Dupuit-Forchheimer equation for flow from the sump gravel to collection pipe
[3] Expected pump type and flow capacity for side slope riser.

LCRS Vertical Riser

In addition to the LCRS side slope pipe, the LCRS sump also has a vertical riser pipe which will extend from the LCRS through the waste fill and final cover system to the surface. The vertical riser is a redundant design feature which provides additional access to the LCRS sump whereby a second pump can be added to rapidly increase leachate removal rates. As shown on Drawing Nos. 17 and 20 (Volume III), the vertical riser arrangement consists of two pipes and two vertical riser pipe bases. The innermost pipe is a 18 inch diameter stainless steel pipe which rests on HDPE flatstock and extends from the bottom of the LCRS sump through an opening in the concrete vertical riser foundation above. Because this pipe is not attached to the concrete foundation, any settlement that the concrete incurs will not be transferred to the pipe. The concrete vertical riser foundation rests on the LCRS gravel and provides support for the second pipe which will extend through the waste fill to the surface. This pipe is wrapped with a double layer of HDPE geomembrane. This arrangement isolates the pipes from the surrounding soils which reduces down drag forces resulting from waste settlement. Calculations which evaluate the down drag forces and bearing capacity of the concrete vertical riser foundation are included in Appendix E (Calculation No. E-30), Volume VI.

Crest Riser Pad Arrangement

Drawing No. 19, (Volume III) illustrates the LCRS, LDRS, and Vadose slope riser piping and valving, the double lined 9,000 gallon polyethylene tank (poly tank) system for leachate storage, and the crest risen pad. Also indicated are high and low level tank cutoff switches, flexible piping connections between the inner and outer poly tanks, the fluid level sight gauge, 50 gpm leachate discharge pump and control panel locations.

The double lined poly tank consists of two tanks, one inside of the other. The inner tank will have a capacity of 9,000 gallons and the outer tank will have a minimum capacity of 15,500 gallons. Liquids containing solvents such as MEK, toluene, xylene, diesel, or gasoline in concentrations greater than 15 percent will not be placed in the tanks. Tank tie down details will be developed from manufacturer's shop drawings when the tank is purchased.

The concrete crest riser pad will slope towards the landfill crest. Should a catastrophic failure of the tank or piping system occur, leachate will flow back into the landfill leachate collection and removal system rather than be released to unlined areas. The landfill liner system anchor trench will completely encompass the pad so that any leakage through the pad will also drain back into the landfill leachate collection and removal system. Construction details for the concrete containment pad are called out in Specification Section 03100, Section 03200, Section 03290, and Section 03300.

3.1.4 Waste Filling Sequence

As mentioned previously in Section 3.1.2, landfill development will begin in Phase IA, proceed southward into Phase II, and then finish in Phase III. The extent of landfill subphases will be based on waste receipt rates.

Liner installation in Phase IA will take place in two stages: the slope and floor area below the access ramps and the slope area above the access ramps. Once the waste fill approaches the limits defined in Drawing No. 10 (Volume III), the cut slope will be advanced southward into Phase II and the remaining floor and slope areas of Phase I will be lined. The contaminated

water basin in the base of Phase I will also be removed and re-established in Phase II. Waste filling in Phase I will continue during this liner expansion. As the waste fill extends beyond and above the access ramps, a ramp will be established in the south waste fill slope to provide access to the newly lined floor areas of Phase I. Detailed planning for Phase II and Phase III liner installation, access ramp location, and waste fill sequencing will be determined in the future, however, the ultimate landfill configuration will be maintained.

Waste filling will take place in 5 to 10 foot thick horizontal lifts. Waste will be covered with daily cover soil as soon as practicable following waste placement (and minimally at the end of each operating shift). Daily cover soil thicknesses will range from 0.2 to 0.5 ft.

3.1.5 Interim and Final Covers

Because landfill development and waste filling will take place in stages depending on waste receipt rates, ultimate waste fill heights may not be achieved early in the life of the landfill. For example, in order to achieve maximum fill heights in Phase I, Phase II below grade filling will necessarily have to be substantially complete. A similar situation will occur between Phase II and Phase III in order to reach maximum fill heights in Phase II. To reduce stormwater infiltration and promote clean water run-off from inactive fill areas within the landfill, interim cover over the waste will be established. Interim cover will consist of a 1.5 foot thickness of cover soil.

The interim soil cover will be inspected following rain events for rills or other erosion features and will be regraded if necessary. Run-off from interim cover areas will drain to the landfill's perimeter drainage ditch system and flow to the site stormwater detention basin. Alternatively, if deemed necessary by the owner, a geosynthetic cover consisting of a light weight sacrificial HDPE geomembrane could also be placed on top of the soil cover to shed rain water. When waste placement commences in the interim cover area, the geosynthetic cover can be used in a new location or left in place. Excess interim soil cover which has not come in contact with waste material can be used as daily cover during the new waste placement operation.

Drawing Nos. 21, 22, and 23 (Volume III) illustrate the landfill's ultimate waste fill configuration and final cover design. The final cover system is a composite cover consisting of (from top down) a vegetative cover, a geocomposite drainage layer, a geomembrane layer, a geosynthetic clay layer, a prepared subgrade layer, and a cover soil layer. Details of each component of this 4.5 foot thick protective system are discussed below.

- *2.5-foot thick vegetative cover*

  The vegetative cover will provide a substrate for plant growth on the cover surface and protect the underlying geosynthetics from frost and sun exposure damage. Establishment of plant growth will enhance evapotranspiration of precipitation that soaks into the vegetative cover and will reduce soil erosion due to rainwater runoff. Specification Section 02227, discusses vegetative cover material requirements including particle size and moisture content, placement and compaction requirements, and survey and field quality control requirements. Specification Section 02900, identifies seed mixtures, site preparation, and planting requirements for cover vegetation.

- *Geocomposite (transmissivity $\geq 2 \times 10^{-4}$ m^2/sec) consisting of :*

  * A 7 oz. geotextile (non-woven)
  * A geonet
  * A 7 oz. geotextile (non-woven)

  The high transmissivity geocomposite to transmit and remove precipitation percolating through the vegetative cover above. The upper and lower geotextiles of the geocomposite serves as a drainage layer to filter sediments from the rainwater and cushion the geomembrane below. Flow calculations discussed in Section 3.2.7 and presented in Appendix E, Volume VI (Calculation No. E-28) indicate that the geocomposite, in combination with the vegetative cover above, is capable of removing 99 percent of the precipitation falling on the cover. Specification Section 02710, describes minimum geocomposite properties required, material transportation and handling procedures, deployment and seaming requirements, and material CQA.

- *60-mil thick HDPE geomembrane (textured on both sides)*

  The 60-mil HDPE geomembrane placed below the geocomposite drainage layer and on top of the GCL is the primary barrier layer of the cover system. Together with the underlying GCL, the HDPE geomembrane forms a highly efficient barrier layer to restrict percolation of rainwater into the waste fill (see Section 3.2.7). HDPE geomembrane texturing serves to increase the geocomposite/geomembrane/GCL friction angles to enhance slope stability. Specification Section 02775, interface describes minimum geomembrane properties required, subgrade preparation and inspection, material transportation and handling procedures, deployment and seaming requirements, and material CQA.

- *Geosynthetic clay liner (GCL)*

  In conjunction with the overlying HDPE geomembrane, the GCL will serve as a low permeability ($k \leq 5 \times 10^{-9}$ cm/sec) barrier layer to restrict infiltration of precipitation runoff into the waste fill. The GCL type used will consist of bentonite granules sandwiched between two layers of geotextile. Specification Section 02780, describes the minimum GCL properties required, subgrade preparation and inspection, material transportation and handling procedures, deployment and seaming requirements and material construction quality assurance.

- *6-inch thick prepared subgrade layer*

  The prepared subgrade component will provide a smooth stable surface suitable for placement of overlying geosynthetic materials. Specification Section 02119, presents subgrade material requirements including particle size and moisture content, placement and compaction requirements, and survey and field quality control requirements.

- *1.5-foot thick protective soil layer*

  The protective soil layer placed on the surface of the waste fill serves to isolate the waste and any near surface debris from the overlying cover elements and also provides a base for the prepared subgrade layer. Specification Section 02226, presents material requirements including particle size and moisture content, placement and compaction requirements, and survey and field quality control requirements.

As shown on Drawing No. 23 (Volume III) the final cover system will extend 20 ft outside the crest of the landfill. In addition, the waste fill terminates inboard of the crest line. Rainwater that percolates through the vegetative cover will flow in the cover system's geocomposite layer to the 6" perforated, corrugated, polyethylene pipe located in the cover anchor trench. The water will then be discharged to the landfill perimeter drainage ditch system. Rainwater that percolates through the cover system and comes in contact with the waste will flow vertically downward and be captured in the LCRS.

Drawing No. 22 (Volume III) indicates the location of the cover access road and surface water diversion ditches. Traffic on the cover access road will be limited to light vehicles such as pick up trucks. Surface water drainage ditches on the cover are included to reduce runoff flow lengths and thereby reduce surface soil erosion. Sections 3.2.10 and 3.2.11 discuss ditch sizing and cover soil erosion, respectively.

Waste settlement impacts on the 6 percent and 4H:1V cover slopes are discussed in Section 3.2.2.

3.1.6 Landfill Stormwater Control Features

Drawing Nos. 13, 14, 22 and 25 (Volume III) illustrate the landfill's stormwater control features designed to contain and control rainwater run-off and run-on for a 25 year, 24 hour storm event. These features include the landfill's collection basin, contaminated water basin and slope run off drainage ditches, cover system drainage ditches, perimeter drainage ditch, and the culverts and drainage ditches leading to the stormwater detention basin.

During the Phase IA waste filling, runoff from the slope areas above the access ramps and from the cut slope area will be diverted to the HDPE lined water collection basin located near the toe of the cut slope on the floor of the landfill. HDPE lined diversion ditches located on the side of the access ramps will carry slope run-off to the collection basin. The landfill perimeter ditches located on either side of the perimeter road will intercept run-off from areas outside of the landfill and divert this water to the stormwater detention basin.

Once waste filling reaches elevations above the landfill crest, interim soil cover (and/or interim geomembrane cover) will be placed on outer fill slopes. Rainwater run-off from the clean slope cover will flow into the perimeter ditch system and flow to the stormwater detention basin.

During the operational period, when the final cover system is partially installed in some areas and waste filling continues to take place in other areas, run-off from the final cover will be diverted to the stormwater detention basin. Following the post closure period, after the effectiveness of the landfill cover has been demonstrated, the stormwater detention basin will be removed from service and the area will be regraded to its approximate predisturbance state.

Run-off from the landfill cover will be allowed to flow into the natural drainages which existed prior to construction.

Section 3.2.10 summarizes surface water calculations performed to size the landfill's stormwater control features. The calculations are presented in Appendix F, Volume VI.

3.2 LANDFILL DESIGN ANALYSES

3.2.1 Slope Stability

Cut Slope Stability

Prior to filling, unsupported cut slopes will exist on all sides of the landfill. These slopes were analyzed for static and dynamic stability using the Janbu Simplified Method. A computerized slope stability program (XSTABL) (44) was used to analyze the cut slopes. Strength parameters used for soil and rock materials were estimated using design overburden pressures and plasticity index data gathered from laboratory testing of site soil materials correlated to published data (46). The material properties used in the analyses are summarized in Calculation No. E-1, presented in Appendix E, Volume V.

The site grading plans (Drawing Nos. 5 and 6), Volume III indicate that the maximum cut slopes will be 3H:1V and maximum height will be approximately 100 feet. Results for the critical 3H:1V slope indicate a static factor of safety of 1.4 for the critical short term (undrained) condition. Stability during seismic loading was estimated by applying a pseudo-static earthquake force in the Janbu analysis. Results based on the 0.04 g design acceleration indicate a dynamic factor of safety of 1.2 for the short term (undrained) condition.

Waste Fill Stability

Waste fill stability was considered for both the Phase 1A and ultimate landfill configurations. In both cases a face failure through the waste and along the lining system, and a basal failure along the lining system was considered. The analysis assumed a 4H:1V waste fill slope and floor at design base grades. The Sarma analysis method was used to calculate factor of safety and acceleration coefficient (Kc). Kc is the net acceleration that would have to be applied to a slide mass to initiate movement.

Phase 1A Waste Fill Stability

Critical inputs for the Phase 1A stability analysis were as follows:

- *GCL, saturated undrained condition: friction angle = 2° and C=440 psf*

  Based on testing performed by Geosyntec Inc. using actual site soils and a needle punched GCL, the critical failure interface under saturated conditions occurs in the bentonite layer between the geotextile components of the GCL. It should be noted that this value is highly conservative since the GCL is most likely to remain in an unsaturated state during the life of the landfill. Additionally, the type of GCL tested was the needle punched variety. Other types of GCLs with stitching between the geotextile components offer substantially greater interface shear strengths.

- *Design ground acceleration = 0.04 g*
- *Waste friction angle ϕ = 29°(29)*
- *Design fill configuration shown on Drawing No. 10 (Volume III)*

Results of the Phase 1A analyses presented in Calculation No. E-3, Appendix E, Volume V, indicated a static factor of safety of 1.5 and a dynamic factor of safety of 1.0. These factors of safety are considered acceptable for the interim fill configuration of Phase 1A.

Ultimate Landfill Configuration Waste Fill Stability

The ultimate landfill configuration analyses used the same liner interface strength inputs as the Phase 1A evaluation and the final waste configuration shown on Drawing No. 22 (Volume III). Results of the ultimate configuration waste fill stability analyses presented in Calculation No. E-4, indicated a static factor of safety of 3.7 and a dynamic factor of safety of 1.5. These factors of safety are considered acceptable for the ultimate waste fill configuration.

Protective Soil Layer Stability

An infinite slope model approach was used to evaluate the stability of the protective soil layer on the 3H:1V landfill slopes which considered the loading scenario of the protective soil layer only, and a loading scenario with a D6 dozer (9.8 psi track loading [16]) on top of the protective soil. The analysis considered saturated and undrained soil conditions. The soil/geotextile interface shear strength was based on a friction angle of 31° and an adhesion of 15 psf obtained from interface shear tests. Results of the analyses indicated a static factor of safety of 2.0 for the soil only case and a static factor of safety of 1.8 for the case with the dozer loading. Both factors of safety are considered acceptable. Results of these analyses are presented in Calculation No. E-2, Appendix E.

Cover Stability

The cover system stability analysis focused on two potential failure mechanisms: a deep block failure through the waste and along the basal liner system, and an infinite slope failure within the cover system. Both stability analyses were conducted for static and dynamic conditions assuming undrained soil conditions. The block failure analysis assumed a zero head condition on the liner system while the infinite slope failure analyses considered a zero head condition and a head condition of 2.5 ft in the cover. As with other stability analyses, a design ground acceleration of 0.04g, waste friction angle of 29°, and liner interface strength of δ = 2° and a = 440 psf was assumed.

Results of the analyses indicated a static factor of safety of 2.8 and dynamic factor of safety of 1.5 for the deep block failure. The infinite slope analyses indicated a static factor of safety of 10.9 and dynamic factor of safety of 6.5 for the zero head condition and a static factor of safety of 5.2 and dynamic factor of safety of 3.1 for the 2.5 ft. head condition. All of these factors of safety are considered acceptable. Results of this analysis are presented in Calculation No. E-5, Appendix E, Volume V.

3.2.2 Settlement

Subgrade Settlement

Total settlement of the landfill base due to settlement of the subgrade and prepared subgrade layers was calculated to ensure that the base liner grades did not fall below EPA's recommended minimum of 2 percent.

Subgrade settlement was modeled assuming the subgrade behaves as an elastic medium (30). This assumption implies that any settlement occurs during placement of a given load. Therefore, settlement in the subgrade should occur during the operating life of the landfill and post-closure settlement should be negligibly small. The most important parameter used in this analysis is the elastic modulus of the subgrade. The elastic modulus used was 72,000 ksf which was obtained from conservative estimates for unweathered mudstone (32). The maximum calculated settlements near the center of the landfill are expected to be on the order of 5 inches. Settlement should progressively decrease towards the toe of the sideslopes. These settlements are not expected to result in any excessive stress in the liner system. Details of the subgrade settlement analysis are presented in Calculation No. E-9, in Appendix E.

Final Cover Grades Due to Waste Settlement

As previously mentioned, waste placed at the Facility will consist of hazardous waste which contains no free liquids. All drummed solid material and lab packs will be stacked horizontally in rows within the landfill and the voids between drums filled with compacted bulk wastes. Bulk waste filling will take place in 5 to 10 foot thick horizontal lifts. Waste will be covered with daily cover soil as soon as practicable following waste placement (and minimally at the end of each operating shift). Daily cover soil thicknesses will range from 0.2 to 0.5 ft.

EPA guidelines suggest a minimum of 3 percent for final cover grades on hazardous waste landfills. The proposed 6 percent initial design cover grade was analyzed to determine the maximum settlement factor to maintain the final 3 percent grade. The calculated maximum settlement factor was 7 percent. The analysis assumed that the waste settlement is uniform. Calculation No. E-11, presents waste settlement computations in Appendix E, Volume V.

EPA estimates, based on finite element modeling, indicate that settlement factors of 11.5 percent are appropriate for hazardous waste landfills (38). This model considered that the most significant portion of the waste would be solidified material buried in steel drums, with the drums having a maximum allowable void space of ten percent. This model may not be applicable to the Facility because there should be less void space in the waste than that assumed for the model.

In order to mitigate this potential discrepancy between the suggested 11.5 percent and 7 percent, the post-closure waste settlement of Phase I should be monitored. The monitoring results will be compared to the estimated settlement factor of 7 percent. If settlement is greater than 7 percent, cover grades of subsequent phases will be steepened to accommodate the settlement and maintain the minimum 3 percent final grade.

3.2.3 Geosynthetics Strength and Performance Analyses

3.2.3.1 Geomembranes

Settlement Induced Stress

The maximum settlement will occur at the base of the cell slopes where the waste load is highest. The subgrade settlement is estimated to be approximately 0.5 feet. This settlement will vary from this calculated maximum at the slope toe to zero at the slope crest. Resulting stresses of 65 psi in the geomembrane are much lower than the 2200 psi geomembrane yield stress. Differential settlement is therefore not expected to damage the liner (34). Details of the liner stress analysis are presented in Calculation No. E-12, Appendix E, Volume V.

Thermal Induced Stress

Due to the 2-foot thick protective soil layer above the liner, the 60-mil HDPE geomembrane liner will not be subject to extended periods of contraction and expansion from daily temperature differentials. Temperature restrictions for installation of geomembrane are discussed in Specification Section 02775.

Tear and Puncture

All geomembranes in the landfill liner and cover system are overlain by at least one layer of geotextile. Review of the puncture resistance of the geotextiles indicates a worst case factor of safety of 3.5 (see Calculation No. E-17 and Calculation No. E-21, Appendix E, Volumes V and VI). Therefore, the proposed 60-mil HDPE is adequate to resist puncture stresses.

3.2.3.2 Geocomposites

The geocomposite is intended to act as a lateral drainage layer in both the LCRS, LDRS, and cover system. The geonet in the core of the geocomposite is the drainage media and the overlying and underlying geotextile act as filters. The primary design criteria of the geocomposite is the transmissivity. As part of the design process the typical transmissivity values reported in the literature and by manufactures have been reduced to account for clogging of the geotextile, penetration of the geotextile in to the geonet and creep of the geonet.

In order to confirm the actual transmissivity of the material that arrives on the site, the specifications require that the material be tested as part of the conformance testing program. The specific test methods, including backing materials, normal loads, seating times, gradients, and test durations are detailed in the specifications and meet actual design conditions.

3.2.3.3 Geotextiles

Geotextile Filtration

Geotextiles are used in a number of locations in both the liner and cover sections for filtration. Specifically, the geotextiles act as filters between the clay liners and drainage layers or between the drainage gravel material, protective soil cover, general fill and a drainage layer. All of the soil materials expected to be used for either the liners, covers, protective soil cover or general

fill are conservatively expected to be fine grained with more than 50 percent of the material passing the Number 200 sieve.

The design criteria outlined by Task Force 25 (31) indicated that for soil material with more than 50 percent passing the #200 sieve, the apparent opening size (AOS) of the geotextile should be less than 0.297 mm. The current geotextile specifications require that the AOS is less than 0.212 mm. Therefore, the geotextile should adequately retain any of the onsite soils. Calculation E-20 in Appendix E, Volume VI, compares specified material AOS values to site soil analyses results.

Geotextile Cushion

The puncture resistance during installation of the proposed geotextile materials was analyzed. The analysis, which used standard design equations (33), was based on the maximum ground pressure exerted by construction equipment, the largest average aggregate size that will be in contact with the geotextile, and the minimum puncture strength properties specified in the construction specifications contained in Appendix C, Volume IV. Based on these parameters the calculated safety factor for puncture is 3.6, which is acceptable (see Calculation No. E-21, Appendix, Volume VI).

3.2.3.4 Geosynthetic Clay Liner

No specific design analyses were conducted on the GCL other than determining the interface friction angle of the material in the liner and cover section. The GCL has a specified permeability of $5x10^{-9}$ cm/sec which exceeds EPA's criteria of $1x10^{-7}$ cm/sec. Detailed specifications for the GCL are presented in the construction specifications (Appendix C, Volume IV). The critical parameters for the GCL will be confirmed through a conformance testing program on the material that is delivered to the site.

3.2.3.5 Geosynthetics Leachate Compatibility

Specific leachate compatibility tests have not been conducted on the soil or geosynthetic liner components for the Facility. These tests have not been conducted at this time, because the specific manufacture of the liner components has not been selected and there is not a representative leachate available for testing. The following manufactures, but not limited to, will be considered to provide geosynthetics for landfill construction:

- Agru/America Inc.
- Columbia Geosystems Ltd.
- GSE Lining Technology Inc.
- National Seal Co.
- Poly-Fex Inc.
- Raven Industries Inc.
- S.D. Enterprise Co. Ltd.
- Serrot Corp
- Solmax Geosynthetics, Inc.

EPA, as shown in Section 1.0, recommends that compatibility testing be done on the specific (manufacture and resin type) liner materials selected for use in a facility and a representative leachate for the facility. Therefore, it is proposed that testing be completed prior to

construction once the geosynthetic materials have been selected. Since the facility will not be in operation, a representative leachate will not be available. However, as recommended by EPA (55), market studies can be used to characterize expected waste streams and a synthetic leachate can be developed for use in compatibility testing.

Although compatibility has not been completed, it is expected that the geosynthetic materials selected for the liner, LCRS and LDRS for the Facility have a long track record of successful use at a variety of waste disposal facilities (both municipal waste and hazardous waste) across the United States. Therefore, it is not expected that there will be any compatibility issues that would impact the current design. However, as mentioned above, site specific testing will be completed and the results submitted to NMED for approval prior to construction.

3.2.4 Sump Compacted Clay Liner

In the sump base a compacted clay liner will be placed in addition to a GCL layer. The compacted clay liner (CCL) will provide an added thickness to the liner in the area of the sump where leachate is expected to have the longest resident time and the largest head. The specifications for processing, placement, and compaction are detailed in the specifications. The placement criteria in terms of moisture content and dry density is defined by a window with limits defined by the zero air voids curve, a percent saturation line, a minimum dry density and a minimum moisture content. A graph indicating these specific limits is presented in the specifications which were based on actual laboratory testing conducted as part of this study (Appendix C, Volume IV). This method of specifying a compaction window for a CCL is recommended by EPA and is detailed in a article by Prof. Craig Benson (12).

As part of the CQA program samples of the material to be used as the compacted clay liner will be obtained and tested to confirm the permeability criteria ($k \leq 1 \times 10^{-7}$ cm/sec) can be met. In addition, samples will be taken from the in-place liner to confirm the permeability.

3.2.5 Anchor Trench Design

The pullout capacity of the primary and secondary geosynthetics from the landfill anchor trench was determined. It was assumed the geosynthetics will pull out of the trench with single-sided shear. Single-sided shear is believed to occur rather than double-sided shear because there is less shearing resistance for single-sided shear. Assumed interface friction angles were based on previous laboratory testing for similar materials at low normal stresses. Based on the trench geometry, critical HDPE geomembrane properties, and assumed interface friction angles, both the secondary and primary geomembranes will pull out prior to tearing. Stability calculations for both the secondary and primary geomembranes systems indicate that there are no net downslope forces on the anchor trench because the liner systems are held in place by friction (see Calculation No. E-15, Appendix E, Volume V).

3.2.6 Access Ramp Design

Calculation No. E-24, presented in Appendix E, Volume VI evaluated the puncture resistance of the geomembrane on the landfill access ramps. The ramps grade at 10 percent from the crest of the landfill to the floor. Drawing No. 14 (Volume III), shows the access ramp configuration during initial Phase 1A filling below the ramps and the final configuration after the slope areas above the ramp are lined.

The ramp section consists of the following components (from top down):

- 1 ft thickness of roadbase material
- 12 oz cushion geotextile (enveloping the top and sides of the underlying subbase)
- 2 ft thickness of subbase material
- Basal liner geosynthetics (geocomposite/60 mil HDPE geomembrane/geocomposite/ 60 mil HDPE geomembrane/GCL/prepared subgrade)

The calculation considered a Caterpillar 631 scraper which weighs approximately 168,000 lbs when fully loaded (16). A factor of safety of 4.6 against puncture of the HDPE geomembrane was calculated and is considered acceptable for this loading condition.

An assessment of the stability of the access ramp liner system under breaking forces from a loaded scraper was also analyzed (34). This analysis utilized the strength parameters from the interface shear testing program. The results presented in Calculation No. E-6, Appendix E, Volume V indicate a factor of safety of 4.3 against sliding on the ramp.

3.2.7 HELP Modeling

Hydrologic Evaluation of Landfill Performance (HELP) (41) modeling was performed to demonstrate equivalency of the proposed Facility landfill liner and cover system with EPA's Minimum Technology Requirement (MTR) systems. This demonstration was submitted to NMED for review and was subsequently approved by NMED on March 11, 1996 and EPA on March 14, 1996. The report entitled, *Triassic Park Hazardous Waste Landfill Alternative Liner System Analyses (Revision 1)*, dated March 1996 presents the HELP modeling performed and is reproduced in Calculation No. E-28, Appendix E, Volume VI.

The HELP modeling approach used to evaluate the hydrologic performance of the proposed landfill liner and cover alternative follows the NMED's Draft Guidance Document for Performance Demonstration for an Alternative Liner Design Using the HELP Modeling Program Under the New Mexico Solid Waste Management Regulations (20 NMAC 9.1). This approach was selected because it allows a direct comparison between MTR liner system and an alternative liner system. The results can be used to demonstrate performance equivalency required under 40 CFR 264.301(d).

The conclusions of the HELP modeling as stated in the report are as follows:

- There is little difference between the proposed alternative and MTR in terms of percolation rates through the bottom liner over the life of the facility. The differences that exist in Years 0 through 10 are insignificantly small. The proposed alternate liner performance can therefore be considered equivalent to the MTR liner performance.

- Hydraulic pressure on the primary and secondary liners of both the MTR and proposed alternate liner system is well below the regulatory maximum of 12 inches.

- The cover system leakage is less than or equal to the leakage of the liner system. It effectively reduces precipitation infiltration which will allow the waste to drain once the cover is in place.

3.2.8 Leachate Collection and Removal, Leak Detection and Removal, and Vadose Monitoring System Hydraulic Analyses

Analyses performed to evaluated the effectiveness of the LCRS, LDRS, and Vadose Monitoring Systems are discussed below. Also discussed are slope and vertical riser pipe strength evaluations and the concrete crest riser foundation analyses.

Leachate Collection and Removal System Analyses

Based on HELP modeling data presented in *Triassic Park Hazardous Waste Landfill Alternative Liner System Analyses (Revision 1),* dated March 1996, maximum LCRS flow rates of 116.8 gallons per acre per day (gpad) for slope areas and 50.9 gpad for floor areas occur during year 11 of the simulated facility life. For Phase 1A, which has a slope surface area of 7.9 acres and floor surface area of approximately 3.4 acres, this totals to approximately 1,100 gpd. Calculation No. E-31, Appendix E, Volume VI estimates the flow capacity of the LCRS sump design to be approximately 618,000 gpd (based on Dupuit-Forchhiemer Equation [11]).

The flow capacity of the LCRS sump far exceeds the flow rates delivered from the LCRS as determined from the HELP modeling. A Grundfos 50 gpm pump which has the capacity to remove 72,000 gpd is recommended for the LCRS sump. In addition, should flow rates into the LCRS increase beyond those predicted by the HELP modeling or the capacity of the 50-gpm pump, a second leachate removal pump can quickly be added via the vertical riser system, thus increasing the leachate removal rates.

Leak Detection and Removal System Analyses

Adequacy of the leak detection and removal system for Phase 1A is addressed in the Landfill action leakage rate calculation presented in Appendix G (Volume VI). In this calculation, leakage rates into the LDRS, as determined by EPA's recommended method, were compared to flow capacities of the LDRS geocomposite drainage layer and the LDRS sump. Based on these calculations, the flow capacity of the LDRS sump exceeds the flow capacity of the LDRS geocomposite drainage layer and the flow capacity of the LDRS geocomposite drainage layer exceeds the leakage rate into the LDRS. A Grundfos 50 gpm pump which has the capacity to remove 72,000 gpd is recommended for the LDRS system sump.

Vadose Monitoring System Analyses

The vadose monitoring sump serves as a detection system for leakage of the secondary LDRS system. A Grundfos 25 gpm pump is recommended for vadose monitoring sump. In the unlikely event that a leak develops in the LDRS sump, leachate will flow to the vadose monitoring sump where it can be collected and removed.

Evaluation of Slope Riser Pipe and Vertical Riser Pipe Strengths

Calculation No. E-26, presented in Appendix E, Volume VI considers the stresses and deflections to the slope riser pipes. Based on this calculation, the 18 inch diameter HDPE SDR 11 slope riser pipe ring deflection at maximum burial depths of 160 ft is 0.4 percent. This is less than the manufacturer's recommended ring deflection limit of 2.7 percent (39).

The downdrag loads on the vertical riser pipe were evaluated in Calculation No. E-30 Appendix E, Volume VI to determine if the vertical riser pipe could damage the liner. The vertical downdrag loads are developed as a result of waste settlement around the vertical pipe. In order to limit the downdrag loads acting on the liner, the lower portion of the vertical riser was de-coupled from the upper portion. The upper portion was founded on a large concrete foundation that is located on top of the LCRS sump gravel. In addition, a friction break consisting of a double wrap of HDPE geomembrane was included around the steel vertical riser pipe.

3.2.9 Action Leakage Rate and Response Action Plan

Because of the similar liner components used in the landfill and the evaporation pond a single Action Leakage Rate (ALR) and Response Action Plan (RAP) was developed which includes both facilities. This plan and its supporting calculations are presented in its entirety in Appendix G, Volume VI. The results are summarized below.

An Action Leakage Rate (ALR) and RAP for the proposed Facility landfill is required under 40 CFR Parts 264.302. The ALR, as defined in the final rule published in January 29, 1992, is the maximum design flow rate that the LDRS may remove without the fluid head on the bottom liner exceeding one foot. The RAP describes the steps to be taken in the event the ALR is exceeded in landfill. The RAP specifies the initial notifications, steps to be taken in response to the leakage rate being exceeded, and follow-up reports.

The EPA recommended method for determining the landfill ALR presented in Federal Register Vol. 57, as used to calculate the ALR for the landfill facility. Using the flow equation for geonets and applying field representative geocomposite transmissivities and appropriate factors of safety for geonet creep and sediment clogging, the recommended ALR for the landfill was determined to be 900 gpad.

The ALR value of 900 gpad is above the EPA recommended value of 100 gpad. The primary reason for this difference is that the EPA value is based on a sand drainage layer with a permeability of 1×10^{-2} cm/sec compared to the geocomposite drainage layer transmissivity of 2.2×10^{-4} m^2/sec proposed for the landfill.

Additional computations to check the LDRS sump capacity and LDRS drainpipe capacity are also presented in the Appendix G, Volume VI.

Response Action Plan steps outlined in the Action Leakage Rate and Response Action Plan closely follow the recommended actions presented in Federal Register Volume 57, No. 19.

3.2.10 Surface Water Drainage Analyses

Design parameters for HDPE geomembrane ditches lined 7 and 8 located above the landfill access ramps are presented on Drawing No. 25, Sheet 1 of 2 (Volume III). The methodology, assumptions, and run-off calculations for these channels and the collection basins discussed below and are presented in Appendix F, Volume VI.

The clean water collection basin located at the toe of the 2H:1V cut slope in the south end of landfill will contain the run-off from the 15 acres of unlined area of Phase 1A. The total run-

off from the 25-year, 24-hour event is approximately 4.5 ac-ft. Total volume of the collection basin assuming 1 foot of freeboard is 5.2 ac-ft.

The collection area at the toe of the Phase 1A waste fill slope is designed to contain the run-off from the entire 15.6 acre fill area of Phase 1A. The total run-off from a 25-year, 24-hour event is approximately 4.3 ac-ft. Total volume of this collection area, assuming 1 foot of freeboard, is approximately 10.4 ac-ft.

3.2.11 Soil Erosion Analyses

Due to the temporary nature of the 2H:1V cut slope and the 3H:1V subgrade slopes above the access ramps, severe soil erosion of these slope areas is not anticipated. The 2H:1V cut slope will be excavated during future landfill construction and the 3H:1V subgrade areas above the access roads will be conditioned prior to liner placement as required in the specifications.

Erosional features such as rills and localized slumping in exposed areas of the protective soils layer on the 3H:1V slope areas will be repaired following rain events.

3.2.12 Frost Protection

The maximum frost depths in the Roswell area, indicates that frost may reach 23 inches during the winter months. In addition, site-specific frost penetration modeling for the site indicated a maximum design freezing depth of 2.3 feet for this cover. Recent studies by Kraus (36) evaluating the effects of frost on geosynthetic clay liners indicate that there is little change in the permeability of the GCLs due to frost. Since the landfill utilizes GCLs in combination with a HDPE geomembrane as barrier elements for both the liner system and the cover system, frost damage to these layers is not expected. However, the 2.5-foot thick vegetative layer on the cover system will also provide frost protection for underlying geosynthetics and soil components in the cover section, two feet of protective soil is specified on the side slopes of the landfill. Due to the relatively short time period that the side slopes will be exposed without waste placement, the 2-foot cover thickness is considered adequate.

3.2.13 Earthwork Volumetrics

Table 3 lists the material quantities for subgrade excavation, structural fill, cover and liner soil components, and the net waste airspace available for Phase 1A development. Table 3 also lists material quantities for the final landfill configuration.

TABLE 3
LANDFILL PHASE 1A MATERIAL BALANCE
AND ULTIMATE LANDFILL MATERIAL BALANCE

	LOOSE OR COMPACTED CUBIC YARDS	BANK CUBIC YARDS
Material Balance Phase 1A		
Design Capacity		
Total Airspace		691,540 bcy
Liner Area		14.5 acres
Cover Area (Top of Waste)		11.9 acres
Volume of cover (NOT included in airspace)		0 bcy
Volume of Liner (NOT included in airspace)		0 bcy
Remaining Airspace		691,540 bcy
Volume of Daily Cover (20% of total)		138,308 bcy
Total Waste Capacity		**553,232 bcy**
Total Soil Requirements		
Volume of Daily Cover (20% of total)	170,119 lcy	138,308 bcy
Volume of Liner Material (0.5 foot)	92,194 ccy	83,813 bcy
Volume of Cover (4 feet)	718,385 ccy	653,077 bcy
Total Volume of Soil Required		875,198 bcy
Total Cut Volume		2,797,921 bcy
Cut/Fill Balance Difference		**1,922,723 bcy**
Material Balance Ultimate Landfill		
Design Capacity		
Total Airspace		13,997,654 bcy
Liner Area		103.9 acres
Cover Area (Top of Waste)		101.2 acres
Volume of cover (NOT included in airspace)		0 bcy
Volume of Liner (NOT included in airspace)		419,063 bcy
Remaining Airspace		13,578,591 bcy
Volume of Daily Cover (20% of total)		2,715,718 bcy
Total Waste Capacity		**10,862,873 bcy**
Total Soil Requirements		
Volume of Daily Cover (20% of total)	3,340,333 lcy	2,715,718 bcy
Volume of Liner Material (0.5 foot)	92,194 ccy	88,813 bcy
Volume of Cover (4 feet)	718,385 ccy	653,077 bcy
Total Volume of Soil Required		3,452,608 bcy
Total Cut Volume		10,281,466 bcy
Cut/Fill Balance Difference		**6,828,858 bcy**

Notes: 1) lcy = 1.23 bcy
2) ccy = 1.1 bcy

4.0 EVAPORATION POND

4.1 EVAPORATION POND DESIGN

4.1.1 General

The purpose of the evaporation pond is to store and evaporate liquid wastes which meet land ban restrictions. The majority of these liquid wastes will be leachates collected from the landfill LCRS or other containment sump systems on site. The pond may receive leachates from other off-site sources.

Evaporation pond design elements include pond layout and phasing; subgrade design; liner system design; and leak detection system and vadose monitoring sump design. This section describes each of these design elements.

4.1.2 Evaporation Pond Layout and Phasing

The proposed evaporation pond area layout and phasing is illustrated on Drawing Nos. 28 and 30 (Volume III). Pond 1 will be constructed initially and will service site operations during waste filling of landfill Phase IA. Future Pond 2 will provide additional pond storage capacity as the landfill expands into Phases II and III. Space has been allocated in the site layout to the east of Future Pond 2 should demand for pond storage capacity increase beyond that currently provided in the design.

Ponds 1 and 2 are each divided into two separate ponds, A and B. This arrangement provides separate pond units which can be placed into service independently. For example, in the event of a major rain event or should the Pond 1A primary liner begin to leak, additional pond storage capacity available in Pond 1B could immediately be brought on line. Each pond unit is equipped with its own discharge station. An inter-pond transfer pump will be located on separation berm between the A and B pond units. Provisions to curtail placement of liquid wastes into an impoundment that has exceeded its ALR are discussed in Appendix G, Volume VI.

Pond units 1A, 1B, 2A, and 2B are 132-ft wide by 285-ft long by 12-ft deep and each will provide approximately 1.63 million gallons of useable storage capacity (excluding 2-foot freeboard volumes). Side slope angles are 3H:1V except for the inter pond berms which have 2H:1V sideslopes. Leak detection and vadose monitoring sumps are located centrally on the long side of the pond units. Pond floor grades are a minimum 2 percent towards the sumps.

Pond overtopping will be controlled manually through the use of liquid elevation indicators placed in the pond. These indicators will be graduated vertical rods fixed to a stable base. The rods will be placed such that graduated markings can be easily read from the discharge station. The rods will be surveyed when placed and checked by survey periodically to ensure accuracy. Correlation charts between elevation and pond volume will be maintained at the discharge station of each pond. Pond discharge pipes will also be equipped with flow meters so that liquid volumes placed in the pond can be continuously tracked and documented. Filling of the ponds above the 2-foot freeboard limit will not be allowed. Site personnel will be present during all fluid discharge and transfer operations to ensure that pond overtopping does not occur in the event of equipment malfunction or other human error.

Due to the small aerial extent of the evaporation ponds and limited fetch distance, wave action developed in the pond fluid surface will also be limited. The 2-ft freeboard distance will accommodate minimal wave action without overtopping.

4.1.3 Subgrade Excavation, Liner System, LDRS Sump Design and Vadose Monitoring Sump Design

Subgrade Excavation

Drawing No. 28 (Volume III) shows the evaporation pond excavation contours. The crest of the evaporation pond is essentially flat. Fill areas around the perimeter of the ponds along with site grading outside of the pond area provide sufficient grade differences for stormwater run-off to flow to the perimeter road ditches and ultimately to the stormwater detention basin located in the northwest corner of the site.

Specification Section No. 02110 describes site preparation, excavated soil classification and stockpiling, subgrade surface preparation and inspection, structural fill placement and compaction requirements, survey and quality control, and erosion control features.

Liner System

Drawing Nos. 31 and 32 (Volume III) show the evaporation pond liner components on the floor, slope, and anchor trench areas. The evaporation pond liner system is a double lined system consisting of (from bottom up) a composite (compacted clay and geomembrane) secondary liner, a geonet leak detection and removal system layer, and a primary geomembrane liner. Details of each liner component are discussed below:

- *3-foot thick compacted clay liner (CCL)*

  The CCL ($k \leq 1x10^{-7}$ cm/sec) in combination with the overlying HDPE geomembrane will serve as a low permeability barrier layer to restrict infiltration of leachate into the subgrade. The CCL will consist of clay material (CL, CH) obtained during excavation of the landfill and evaporation ponds. Specification Section 02221 describes clay material requirements including particle size and moisture content, placement and compaction requirements, and survey and field quality control requirements.

- *60-mil thick high density polyethylene (HDPE) geomembrane liner (smooth)*

  The 60-mil HDPE geomembrane placed on top of the CCL is the second component of the composite secondary liner. Together, the CCL and HDPE geomembrane form a highly efficient barrier layer to restrict percolation of leachate into the subgrade (see Section 3.2.7, HELP Modeling). Specification Section 02775 describes minimum geomembrane properties required, subgrade preparation and inspection, material transportation and handling procedures, deployment and seaming requirements, and material CQA.

- *Geonet leak detection and removal system layer (transmissivity ≥ $5x10^{-3}$ m^2/sec as tested under actual field conditions)*

  The high transmissivity geonet leak detection drainage layer provides a means to transmit and remove leachate percolating through any leaks in the primary geomembrane layer above. Flow calculations discussed in Section 4.2.7 and presented in Appendix G, Volume VI indicate that the geonet is capable of removing leachate in a timely manner such that head on the underlying geomembrane will remain less than 1 foot. Specification Section 02712 describes minimum geonet properties required, material transportation and handling procedures, deployment and seaming requirements, and material construction quality assurance.

- *60-mil thick high density polyethylene (HDPE) geomembrane liner (smooth)*

  This HDPE geomembrane serves as the primary barrier layer of the double liner system. Specification Section 02775 discussed above also applies to this geomembrane layer.

Since portions of this liner component will be permanently exposed to sunlight and UV radiation, it may be necessary to replace it prior to the end of the facility life. The lifetime of exposed geomembrane liners varies, however, it is generally limited to the warranty period of the product which may be as long as 20 years (33). The staged approach to pond development will help alleviate this concern, as will maintaining fluid levels near capacity in the primary use pond unit. Periodically alternating pond units for primary use will also reduce exposure time.

Leak Detection and Removal and Vadose Monitoring Sump Systems

The leak detection and removal, and vadose monitoring systems each have a separate sump from which fluids can be collected and removed. The liner systems on the landfill floor continue into the sumps, however, in order to provide adequate volume to efficiently operate removal pumps, a gravel layer is incorporated into the drainage systems. Drawing No. 32 (Volume III) illustrates the sump layout and cross section. As shown on the drawings, the sumps are square pyramidal shapes which lie concentrically above one another. The slope riser pipe trenches, which contain the LDRS and vadose pipe, enter their respective sumps at the sump base. The slope riser trench arrangement enables the vadose and LDRS slope riser pipes to penetrate overlying geosynthetic liner elements at the crest of the landfill rather than in the sump area. The LDRS and removal sump has a total fluid capacity of 1,790 gallons (after accounting for gravel). Similar to the landfill LDRS sump, the evaporation pond sump will be equipped with fluid level instrumentation and a 50 gpm fluid removal pump. The vadose monitoring sump has a total fluid capacity of 95 gallons (after accounting for gravel).

4.1.4 Evaporation Pond Discharge Pad Arrangement

Drawing No. 31 (Volume III) illustrates the LDRS and vadose piping and valving, the discharge pipe arrangement, and the layout for the concrete containment pad. Tanker trucks will pull up next to the concrete pad and hook up to the desired piping system. Hose connections at the pipes are located within the concrete pad area to contain any leakage. The concrete containment pad slopes towards the evaporation pond crest. Should a catastrophic failure of

the piping system occur, leachate will flow back into the evaporation pond rather than be released to unlined areas. The evaporation pond liner system anchor trench will completely encompass the pad so that any leakage through the pad will also drain back into the evaporation pond. Construction details for the concrete containment pad are called out in the Construction Specification Section 03100, Section 03200, Section 03290, and Section 03300 found in Volume IV.

Stormwater Control Features

Drawing No. 4 (Volume III) depicts the surface grades around the perimeter of the evaporation pond area. Surface water run off from these areas will flow to the roadway ditch system and ultimately to the stormwater detention basin.

4.2 EVAPORATION POND DESIGN ANALYSES

4.2.1 Slope Stability

Cut Slope Stability

Prior to filling, unsupported cut slopes will exist on all sides of the evaporation pond. These slopes were analyzed for static and dynamic stability using the Bishop method of slices. A computerized slope stability program (XSTABL) (44) was used to analyze the cut slopes. Strength parameters used for soil and rock materials were estimated using pocket penetrometer data gathered during test pitting of the site soil materials. The material properties used in the analyses are summarized in Calculation No. E-7, Appendix E, Volume V.

The site grading plans (Drawing Nos. 28 and 29, Volume III) indicate that the maximum cut slopes will be 3H:1V and 2H:1V and maximum height will be approximately 12 feet. Results for the critical 2H:1V slope as presented in Calculation E-7, indicate a static factor of safety of 19.8 for the critical short term (undrained) condition. Stability during seismic loading was estimated by applying a pseudo-static earthquake force in the Bishop analysis. Results based on the 0.04 g design acceleration indicate a dynamic factor of safety of 15.7 for the short term (undrained) condition.

Slope stability was not considered for the filled evaporation pond configurations. Filling the pond with fluid does not place any stresses on the liner system which could cause instability.

4.2.2 Settlement

The evaporation pond will experience relatively low overburden pressures due to its shallow depth and liquid fill density in comparison to pressures previously imparted to the clay during placement compaction. Clay liner consolidation will therefore be negligible.

4.2.3 Geosynthetics Strength and Performance Analyses

As discussed in Sections 4.2.1 and 4.2.2 above geosynthetics components of the evaporation pond will not experience significant stresses related to slope stability or settlement. Settlement induced stresses to evaporation pond geosynthetics were, therefore, not considered.

4.2.3.1 Geomembranes

The general use of geomembranes in the evaporation pond is similar to that described for the landfill. Thermal induced stress and tear and puncture evaluations are discussed below.

Thermal Induced Stress

The 60-mil HDPE geomembrane liner will be subject to contraction and expansion from daily temperature differentials. The contraction/expansion potential of the HDPE geomembrane liner was determined, and the maximum induced stress was determined. Calculation No. E-27, In Appendix E, Volume VI indicates the maximum induced thermal stress in the liner would be 560 psi. This value is far below the 2200 psi minimum yield strength of liner, which yields a design safety factor of 3.9.

Tear and Puncture

The evaluation of geomembrane tear and puncture in the landfill liner system was presented in Section 3.2.3.1. The results of these analyses indicated that the 60-mil HDPE geomembranes were adequate for loading conditions which were much more severe than those expected for the evaporation pond. Since similar HDPE products will be used in the evaporation pond and the same subgrade surface preparation methods are required by the specifications, separate calculations for evaporation pond geomembrane tear and puncture are not necessary.

4.2.3.2 Geonets

The geonet is intended to act as a lateral drainage layer in the evaporation pond LDRS. The primary design criteria of the geonet is the transmissivity. Calculations presented in Appendix G-2, Volume VI evaluate the typical transmissivity values reported in the literature and by manufactures. These values have been reduced to account for clogging of the geotextile, penetration of the geotextile into the geonet and creep of the geonet.

In order to confirm the actual transmissivity of the material that arrives on the site, the specifications require that the geonet be tested as part of the conformance testing program. The specific test methods, including backing materials, normal loads, seating times, gradients, and test durations are detailed in the specifications.

4.2.3.3 Geotextiles

Geotextile Filtration

Geotextiles are used in a number of locations in both the liner and sump sections for filtration. Specifically, the geotextiles act as filters between the pipe bedding material or between the sump drainage gravel. Similar to the landfill evaluation, if these soil materials are conservatively estimated to be fine grained with more than 50 percent of the material passing the Number 200 sieve, then the specified geotextile with a AOS of less than 0.212 mm should adequately retain these soils.

Geotextile Cushion

The puncture resistance during installation of the proposed geotextile materials was analyzed for more severe conditions in the landfill design. Therefore, these calculations are not repeated for the evaporation pond application.

4.2.4 Compacted Clay Liner

As previously discussed for the sump CCL, the criteria for the CCL materials characteristics and the placement and compaction criteria are presented in the specifications.

4.2.5 Anchor Trench Design

The pullout capacity of the primary and secondary geosynthetics from the evaporation pond anchor trench was determined. It was assumed the geosynthetics will pull out of the trench with single-sided shear. Single-sided shear is believed to occur rather than double-sided shear because there is less shearing resistance for single-sided shear. Assumed interface friction angles were based on previous laboratory testing for similar materials at low normal stresses. Based on the trench geometry, critical HDPE geomembrane properties, and assumed interface friction angles, pullout resistance calculations for both the secondary and primary liner anchor trenches indicate that the HDPE geomembranes will pull out prior to tearing (see Calculation No. E-15, Appendix E, Volume V).

4.2.6 Leak Detection and Removal and Vadose System Hydraulic Analyses

The leak detection and removal system design and performance is very similar to the landfill system. Therefore, design analyses for the following criteria are not discussed. Rather the reader is referred to Calculation E-28, Appendix E for the detail of the calculations.

Adequacy of the leak detection and removal system for the evaporation pond is addressed in the Action Leakage Rate calculation presented in Action Leakage Rate and Response Action Plan (see Section 4.2.7 below and Appendix G, Volume VI). In this calculation, leakage rates into the LDRS, as determined by EPA's recommended method, were compared to flow capacities of the LDRS geonet drainage layer and the LDRS sump. Based on these calculations, the flow capacity of the LDRS sump exceeds the flow capacity of the LDRS geonet drainage layer and the estimated leakage rate into the LDRS. A Grundfos 50 gpm pump which has the capacity to remove 72,000 gpd is recommended for the LDRS system sump.

Vadose Monitoring System Analyses

The vadose monitoring sump serves as a detection system for leakage of the secondary LDRS system. A Grundfos 25 gpm pump is recommended for vadose monitoring sump. In the unlikely event that a leak develops in the LDRS sump, leachate will flow to the vadose monitoring sump where it can be detected and removed.

4.2.7 Action Leak Rate and Response Action Plan

Because of the similar liner components used in the landfill and the evaporation pond a single ALR and RAP was developed which includes both facilities. This plan and its supporting calculations are presented in its entirety in Appendix G, Volume VI. The results are

summarized below.

An ALR and RAP for the proposed Facility evaporation pond is required under 40 CFR Parts 264.302. The ALR, as defined in the final rule published in January 29, 1992, is the maximum design flow rate that the LDRS may remove without the fluid head on the bottom liner exceeding one foot. The RAP describes the steps to be taken in the event the ALR is exceeded in the evaporation pond. The RAP specifies the initial notifications, steps to be taken in response to the leakage rate being exceeded, and follow-up reports.

The EPA recommended method for determining the landfill ALR was used to calculate the ALR for the evaporation pond. Using the flow equation for geonets and applying field representative geonet transmissivities and appropriate factors of safety for geonet creep and sediment clogging, the recommended ALR for the evaporation pond was determined to be 1000 gpad.

Although computations indicated a much higher ALR value could be justified, the ALR value of 1000 gpad, which is equal to the maximum EPA recommended value of 1000 gpad, was selected because this value adequately represented a "large and rapid" leak considering the small size of the evaporation ponds.

Additional computations to check the LDRS sump capacity and LDRS drainpipe capacity are also presented in the Appendix G, Volume VI.

4.2.8 Frost Protection

Based on the landfill design, the design depth of frost at the site could be in the range of 2.3 feet (see Calculation No. E-25, Appendix E, Volume VI). Review of the evaporation pond design indicates that portions of the clay liner above the pond fluid level may be exposed to frost action. The following paragraph discusses resulting effects this may have on leakage to the environment.

Unlike the landfill, the evaporation pond is a temporary facility to be removed from service during the facility's post closure period. Increased permeability of the clay liner and any resulting leakage is therefore, not as critical as with a permanent landfill installation. Further, due to the insulating affects of the pond liquids, only portions of the clay liner above the fluid level in the pond will reach freezing temperatures. Finally, the evaporation pond design incorporates a vadose detection system and a leak detection and removal system. Any leakage detected will be removed and if large enough, based on the action leakage rate, will cause remedial steps to be taken to locate and repair damage to the geomembrane, thus limiting exposure of fluids to the clay liner. Therefore, in our judgment, any increase in permeability of the clay liner due to potential damaging effects of frost will not result in significant increases of liquids released to the environment.

4.2.9 Earthwork and Pond Volumetrics

Approximately 62,500 cy of soil materials will be excavated to construct evaporation ponds 1 and 2. Clay liner construction will require placement of 22,150 cy of compacted clay liner material. The resulting pond volume available for liquid storage and evaporation (not including 2 ft of freeboard) is approximately 6.5 million gallons.

5.0 TRUCK ROLL-OFF AREA

5.1 TRUCK ROLL-OFF AREA DESIGN

5.1.1 General

It should be noted that the incoming trucks containing nonstabilized waste will be Department of Transportation (DOT) approved roll off vehicles (17). These trucks are required by DOT to be covered. Additionally, the roll-off container must be free of leaks and the waste must be contained with a plastic bed liner. Together, the roll-off container and the plastic bed liner are considered a double lined system. This containment system will remain in place the entire period the roll-off container is staged in the truck roll-off area. The liner system incorporated in the nonstabilized waste roll-off area is included as a precautionary measure.

It should also be noted that the roll-off containers staged in the unlined roll-off area will contain stabilized waste which has met the paint filter tests for free liquids. Additionally, these roll-off containers will be lined using a plastic bed liner and will be covered in a manner similar to DOT approved roll-off containers.

The purpose of the truck roll-off area is to provide a staging area for incoming roll-off containers with nonstabilized waste destined for the stabilization facility and a second staging area for roll-off containers with post treatment stabilized waste awaiting landfill disposal approval.

Truck roll-off area design elements include truck roll-off area layout, subgrade design; liner design; and drainage sump design. This section describes each of these design elements.

5.1.2 Truck Roll-Off Area Layout

Drawing Nos. 41 and 42 (Volume III) illustrate the layout of the truck roll-off unit. Each is approximately 290 ft long by 170 ft wide roll-off cell can stage approximately 44 roll-off containers. The floor of each cell grades at 2 percent towards its respective sump and the surrounding soil berms have side slopes of 3H:1V and range in elevation from 6 ft to 10 ft. Cell access is provided by four ramps which grade at 10 percent.

The west cell, to be used for nonstabilized waste, will have a geomembrane underliner with an overlying geocomposite drainage layer, subbase, and road base. The east cell, to be used for stabilized waste, will have a structural fill and road base surface layer only.

5.1.3 Subgrade Excavation, Liner System, Drainage Sump Design, and Leak Detection and Removal System Design

<u>Subgrade Excavation</u>

Drawing No. 41 (Volume III) shows the truck roll-off area excavation and fill contours. Cut areas in the central portion of the facility are made to achieve the required floor grades. The berms and fill areas around the perimeter of the truck roll-off area and surrounding site grading provide sufficient grade differences for stormwater run-off to flow to the perimeter road ditches and ultimately to the stormwater detention basin.

Specification Section No. 02110 (Appendix C, Volume IV) describes site preparation, excavated soil classification and stockpiling, subgrade surface preparation and inspection, structural fill placement and compaction requirements, survey and quality control, and erosion control features.

Liner System

Drawing No. 43 (Volume III) shows the liner components on the floor, berm, and anchor trench areas. The truck roll-off area for roll-off containers with nonstabilized waste is a single lined system consisting of (from bottom up) a prepared subgrade, a HDPE geomembrane liner, a geocomposite drainage/filter layer, a subbase layer, and a road base surface. Details of each liner component are discussed below.

- *0.5 ft thickness of prepared subgrade*

  The prepared subgrade component will provide a smooth stable surface suitable for placement of overlying geosynthetic materials. Specification Section 02119, (Appendix C, Volume IV) presents subgrade material requirements including particle size and moisture content, placement and compaction requirements, and survey and field quality control requirements.

- *60-mil thick high density polyethylene (HDPE) geomembrane underliner (smooth)*

  The 60-mil HDPE geomembrane liner placed on top of the prepared subgrade form a highly efficient barrier layer to restrict percolation of rainwater into the subgrade. Specification Section 02775 (Appendix C, Volume IV) describes minimum geomembrane properties required, subgrade preparation and inspection, material transportation and handling procedures, deployment and seaming requirements, and material construction quality assurance.

- *Geocomposite (transmissivity $\geq 2.2 \times 10^{-4}$ m^2/sec) as tested under actual field conditions*

  The high transmissivity geocomposite provides a means to transmit and remove rainwater falling within the nonstabilized waste roll-off bin area. Flow calculations in Calculation No. E-28, Appendix E indicates that the geocomposite is capable of removing rainwater so that ponding can be minimized and trafficability of the upper gravel surface can be maintained. Specification Section 02710, Appendix C, Volume IV describes minimum geocomposite properties required, material transportation and handling procedures, deployment and seaming requirements, and material CQA.

- *1.5 ft thickness of subbase*

  The subbase will consist of free draining soils classified as SM, SW, GM, of GW. Specification Section 02230 (Appendix C, Volume IV) presents material requirements including particle size and moisture content, placement and compaction requirements, and survey and field quality control requirements.

- *0.5 ft thick road base*

  The road base gravel surface will allow stormwater to drain from the surface while providing sufficient bearing capacity for truck traffic. Specification Section 02225 (Appendix C, Volume IV) presents material requirements including particle size and moisture content, placement and compaction requirements, and survey and field quality control requirements.

Drainage Sump System

The drainage sump will collect stormwater run off from the floor of the truck roll-off area. The liner systems on the truck roll-off area continue into the sump, however, in order to provide adequate volume to efficiently operate the removal pump, a gravel thickness has been incorporated into the drainage systems. Drawing Nos. 41, 42, and 43 (Volume III) illustrates the sump layout and cross section. The LCRS slope riser pipe enters the sump at the sump base. The sump has a total fluid capacity of 1,406 gallons (after accounting for gravel). The truck roll-off area drainage sump will be monitored visually to determine whether pumping is required. Fluid removal will be performed by a vacuum truck.

5.2 TRUCK ROLL-OFF AREA DESIGN ANALYSES

5.2.1 Geosynthetics Strength and Performance Analyses

5.2.1.1 Geomembranes

The evaluation of geomembrane puncture in the truck roll-off liner system is presented in Calculation No. 18, Appendix E, Volume V. The results of the calculation indicate that the 0.5 ft road base and 1.5 ft subbase materials will adequately dissipate truck wheel loads and, in conjunction with the subgrade preparation specifications, which call for a 1 inch maximum particle size, will adequately protect the geomembrane from puncture. A calculated factor of safety of 60 for puncture resistance was computed.

5.2.1.2 Geocomposite

Low overburden pressures due to the overlying roadbase and subbase are not high enough to adversely affect transmissity of the geocomposite. Review of the geocomposite transmissivity charts presented in Appendix G-1, Volume VI indicate that transmissivity will be affected negligibly.

5.2.1.3 Geotextiles

Geotextile filtration and puncture resistance are evaluated in Calculation No. E-20, and Calculation No. E-21, found in Appendix E, Volume VI respectively. Based on these calculations, the geotextiles specified for the truck roll-off area will adequately filter the sites fine grained materials and resist puncture.

5.2.2 Anchor Trench Design

The purpose of the truck roll-off anchor trench is to hold the geosynthetic liner components in place during placement of the overlying subbase and roadbase materials. Pull out considerations due to settlement are not a relevant concern for this facility.

5.2.3 Stormwater Collection Sump and Leak Detection Sump Containment Hydraulic Analyses

Calculation No. E-32, Appendix E, Volume VI evaluates the capacity of the stormwater collection sump in the lined portion of the truck roll-off unit to remove liquid from the geocomposite drainage layer. Based on this calculation, the geocomposite flow capacity is estimated to be 161,000 gpd and the sump capacity is estimated to be 199,000 gpd. The sump will, therefore, provide adequate liquid removal capabilities.

6.0 STABILIZATION UNIT

6.1 STABILIZATION UNIT DESIGN

6.1.1 General

The purpose of the stabilization unit is to treat waste streams using a chemical stabilization process which will chemically alter hazardous waste constituents such that their leachability is reduced to levels allowing landfill disposal. The stabilization treatment process involves combining chemical reagents with waste materials according to a specific treatment guideline and mixing until the waste/reagent reactions are complete. The batch stabilization mixing method to be used at the Facility requires a backhoe excavator to mix waste with reagents in a large double lined steel bin.

Stabilization unit design elements presented here include stabilization unit layout; stabilization bin, bin vault, and floor design; and stabilization process design. This section describes each of these design elements. It should be noted that certain components of the stabilization building, process control and delivery systems, ventilation systems and steel bins will be completed under future design/build contracts.

6.1.2 Stabilization Unit Layout

Drawing No. 33 (Volume III) illustrates the layout of the stabilization building and the surrounding area. As previously discussed, the stabilization unit has entrances for incoming trucks on both the north and south access roads. These accesses will be used for incoming waste trucks loaded with nonstabilized waste for processing in the bins. Incoming trucks will enter the gravel lined apron on the north or south side of the unit and back into the stabilization building. Once the load has been dumped into the bin and the truck bed washed out, the truck will exit the unit via its entrance route. The east and west building entrances will be used by stabilized waste loadout trucks which will cycle between the truck roll-off area or the landfill. The gravel lined areas surrounding the stabilization unit will not be used to stage waste haul trucks. Parking areas for site personnel vehicles will be designated near the stabilization unit control room.

The control room is positioned centrally along the west wall of the stabilization building. From this vantage point operations personnel will be able to monitor all activities taking place inside the building. Reagent storage tanks and silos are also located on the west side of the building which permits operations personnel to view reagent delivery activities.

The stabilization building's internal arrangement is centered around the four waste mixing bins. The mixing bins are orientated such that delivery, mixing and loadout operations can take place from either the north or the south sides of the building. Stabilization unit operations are depicted on Drawing No. 34 (Volume III). The 25 ft long by 10 ft wide by 10 ft deep bins can hold approximately 100 cy of waste and reagent material. The double lined steel bins are located within a 38 ft wide by 79 ft long by 12 ft deep concrete vault which has a total volume of 1,330 cy. The bin and vault arrangement provides three levels of waste containment with the inner bin liner serving as primary containment, the outer bin as secondary containment, and the vault as final or tertiary containment.

The 118 ft wide by 123 ft long concrete floor is sized to accommodate the backhoe mixer and load out truck operations with adequate clearances. Section 6.2.3 discusses working point distance and clearance radius requirements for this operation.

The vertical dimensions for the stabilization building will be established during the building design/build phase when locations and sizing of the reagent delivery system and ventilation system are finalized.

6.1.3 Bin Liner, Bin Vault, and Floor Design

The stabilization bin arrangement is a double lined system consisting of two concentric steel bins separated by a network of wire rope isolators. Since the bins are concentric, the outer bin (secondary containment) can hold 100% of the volume of the inner bin. The wire rope isolators act as shock absorbers to dissipate impact loading to the bins by the mixing action of the backhoe. The wire rope isolators also serve to reduce impact loading transferred to the concrete vault floor and walls. Drawing No. 36 (Volume III) illustrates the inner and outer bin arrangements, bin dimensions, plate thicknesses, reinforcing rib arrangements, and locations of the wire rope isolators. The inner bin is not attached to the outer bin and therefore, can be removed. The space between the bins provides access for leak detection instrumentation and fluid removal piping. Should a leak in the inner bin occur such that fluids escape into the inter-bin space, the leak detection instrumentation will trigger alarms in the control room immediately notifying the operators. The bin can then be taken out of service, inter-bin fluids removed, bin walls inspected, and repairs made if necessary. The outer bin is attached to the floor of the concrete vault. Drawing No. 33 (Volume III) shows the location of the LDRS piping. Specification presented in Calculation No. E-32, Appendix E, Volume VI describes the steel plate, reinforcing members, and energy absorbing devices intended for the stabilization bin system.

The concrete vault will contain the stabilization bins. The 1,330 cy vault has the capacity to contain 100 percent of the volume of one 100 cy bin (i.e., after removing 400 cy for each bin). As mentioned above, the vault serves as a tertiary containment feature should a catastrophic bin failure occur. In addition, the vault also provides access to the bins for inspection purposes and for ancillary reagent delivery piping and ventilation ducts. Construction details will be prepared for the concrete containment vault similar to those provided in Specification Section 03100, Section 03200, Section 03290, and Section 03300 contained in Appendix C, Volume IV.

The concrete floor will be steel reinforced cast-in-place concrete. All joints in the concrete floor will be constructed with chemical resistant water stops and caulking sealer. Drawing No. 45 (Volume III) shows the rebar types and concrete details for the floor. Construction details for the floor will be prepared similar to those provided in Specification Section 03100, Section 03200, Section 03290, and Section 03300 (Appendix C, Volume IV). Specification Section 07970 describes the concrete epoxy coating requirements.

6.1.4 Stabilization Process Design

Drawing No. 34 (Volume III) summarizes the major waste processing unit operations and illustrates typical waste and reagent stream flows. Also shown are reagent tank and silo capacities, delivery piping, and control valve and flow meter locations.

Waste stabilization unit operations include waste receiving, reagent addition, stabilization mixing, and stabilized waste loadout. Waste receiving involves positioning loaded waste haul trucks at the end of the bin, dumping the waste load, and washing out any residue left in the truck bed into the bin. Reagent addition involves placing a cover on top of the bin, connecting the ventilation and dry reagent delivery ducts, and injecting reagents into the bin. Reagent delivery to the bins will be controlled by a process controller (computer) system which will automatically sequence and deliver the necessary quantities of reagent based on a predetermined waste processing guideline. The bin cover will then be removed and a backhoe type excavator will mix the reagents with the waste. Following mixing, the waste will be sampled and a paint filter test will be conducted to ensure that no free liquids are present. Also, if necessary, samples will be gathered for toxicity characteristic leachate procedure (TCLP) testing. If the paint filter test is passed, the backhoe will load the stabilized waste into a waste haul truck (roll-off truck) and the truck's roll-off cover will be positioned over the waste. The truck will either proceed to the landfill for disposal or will stage the roll-off container in the truck roll-off area (if TCLP test results are required).

Reagent usage will vary with the waste type and the prescribed stabilization guideline, however, for design purposes a typical stabilization guideline, presented in the table on Drawing No. 34 was used as a basis to size the various reagent storage and delivery systems. It should be noted that both waste receipt rates and stabilization guidelines will vary considerably. Stabilization process flows are discussed further in Section 6.2.4.

Reagent storage and delivery systems for two types of dry reagent and three types of liquid reagent (one being water) are incorporated into the design. Dry reagents including cement and fly ash will be stored in 25,000 and 50,000 cubic foot silos, respectively, and delivered to the bins by a pneumatic delivery system. Liquid reagents including calcium polysulfate and ferrous sulfide will be batch mixed in individual 10,000 gal reagent tanks and pumped into the bins. Water will also be pumped to the stabilization bins.

For design purposes, a CAT 213B LC type excavator was selected as the backhoe mixer, however, other equipment manufacturer's offer excavators with similar reach, power, and weight characteristics.

In order to ensure no visible dust emissions during stabilization processing, the bins and the stabilization building will be equipped with an exhausting ventilation system which will maintain a negative pressure inside the building. Slotted ducts located around the perimeter of each bin will provide supply and return air in a push-pull arrangement to remove dust during the waste receiving, mixing, and loadout operations. During reagent delivery operations, the bin cover, which will also be connected to the exhaust system, will control dust. Dust will be removed from the exhaust air in the bag house located on the west side of the building. Collected dust will be processed in the stabilization unit.

Wastes containing VOCs greater than 500 parts per million per weight (ppmw) will not be accepted for stabilization processing.

6.2 STABILIZATION UNIT DESIGN ANALYSES

6.2.1 Stabilization Bin Structural Analyses

Basic engineering principles in conjunction with finite element analyses were used to address the preliminary structural design of the steel stabilization bins. Principles of impulse - momentum and conservation of energy were used to establish the mass, velocity and displacement relationships. Then plated stresses were approximated through the use of a computer program, Sap 90. Finally force and displacement results were scaled up/down to limiting displacements (controlled by the wire rope isolators) and stresses (controlled by the grade of steel).

The fundamental design inputs for the bin analysis are the forces generated by the backhoe mixing action. For the purposes of this design a CAT 213B LC type backhoe was assumed. Critical velocities of the backhoe movements to prevent damage to the bins were determined as a percentage of maximum velocities achievable by the backhoe. These limiting velocities will be implemented in the actual backhoe unit by adjusting the hydraulic system flows. Calculations are presented in Calculation No. E-23, Volume VI, Appendix E and summarized in the overview below.

<u>Overview Structural Analysis</u>

1. Initial calculations establish the structural capacity required to support the static loads from hazardous waste material plus the stabilizing materials. The worst case scenario for the static load case is 80 cubic yards of material weighing 2970 lbs/cy.

2. Preliminary dynamic analyses for vertical impact loads due to the material dropping into the bin indicate that this is not a significant problem. However, impact from the bucket dropping freely due to a total and instantaneous hydraulic failure from a height of 15 feet would cause stresses in a 1 inch thick inner liner which would far exceed the yield stress of the steel and cause a permanent "dent" in the steel. It does not appear cost effective to design the inner liner for this possibility.

3. Preliminary dynamic analyses established a side impact load from the backhoe bucket with contributions from the stick and boom based upon their relative velocity and percent of load transferred to the bucket when it impacts the sidewall of the mixing bin.

    a. Static loads were applied to the wall of the inner liner to establish the relative deflections of points surrounding the point of impact. Then the effectiveness of the inner liner which would act to reduce the momentum of the bucket was established and the conservation of momentum principle was used to determine the reduction in velocity immediately after impact.

    b. After impact the moving bucket plus the effective plate mass has a kinetic energy equal to one half of the total mass times the square of the velocity. That kinetic energy is "gradually" transferred into potential energy from force times displacement (or bending moment times angle change) in the inner liner, the energy absorbing springs and the outer plate support system. When the bucket has been stopped all of the energy has been transferred from the kinetic state to

the potential state. It appears that 80 to 90 percent of the energy absorption occurs in the springs.

c. Through a trial and error process, approximate relationships between initial velocity, displacements and stresses in the structural systems were established. It appears that the controlling factor in the system is the stress in the inner liner when subjected to impact loads.

d. The impact loads from the weight of the bucket plus contributions from the stick and boom totaling approximately 3,290 pounds results in a kinetic energy in excess of 800,000 lb-inches for the condition where a swing angle of 180 degrees can occur in 3 seconds (approximately 440 inches per second at the outer end of the bin).

e. In order to limit the stresses in the high strength inner liner plate to an acceptable allowable value, it will be necessary to reduce the side to side velocity of the bucket to 15 percent of the present velocity with a ¾ inch thick plate, 19 percent for a 7/8 inch plate and 23 percent for a 1 inch plate.

4. Preliminary analysis of the dominantly in and out impact loads caused by movement of the boom, stick and bucket were also made. Combinations of circular velocities (Boom + Stick + Bucket) could easily result in velocities and resulting impact loads greater than the capacity of the inner plate to resist. Some of these velocities will probably need to be reduced to limit damage to the inner liner but this will require significantly more detailed calculations. Note that the effective mass at impact varies with each of these elements and the addition of these circular velocities and tributary masses in any particular direction and at any particular point is far from linear. The maximum reduction in velocity for any of these elements appears to be in the order of 50 percent.

Bin steel plate thickness is dependent on the grade of steel selected. The final bin design will determine the optimal steel plate to be used.

Corrosion protection for the bins will be provided by installing grounded cathodes to the inner and outer bins.

6.2.2 Stabilization Unit Concrete Vault

The stabilization unit concrete vault is not a secondary containment however, all joints in the concrete vault of the stabilization building will be constructed with chemical resistant water stops. In addition, a chemical resistant epoxy coating will be placed on the surface of the vault floor and walls to further restrict potential liquid penetration into the concrete.

6.2.3 Stabilization Unit Concrete Floor

Waste entering the stabilization building will be contained either in the DOT approved waste trucks, or in double walled piping coming from the liquid waste storage area, or in the double walled stabilization bins. Stabilized waste, having undergone treatment, will either be contained in roll-off trucks fashioned with DOT approved truck bed liners or, if treatment standards are met, according to approved testing protocols, the stabilized waste will be transferred directly to the landfill. The floor of the stabilization building will not be exposed to untreated waste

material and is not required to serve as a containment system. However, all joints in the concrete floor of the stabilization building will be constructed with chemical resistant water stops. In addition, a chemical resistant epoxy coating will be placed on the surface of the floor to further restrict potential liquid penetration into the concrete.

As shown on Drawing No. 33 (Volume III), stabilization bins are located on 19 ft centers in the middle of the stabilization building. The bins are situated such that adjacent bins alternate mixing and receiving ends allowing for reagent addition operations to take place simultaneously with mixing or loadout operations in two adjacent bins.

During mixing and loadout operations, the center point (rotational axis) of the backhoe unit will be located 8 to 9 ft from the mixing end of the bin. Load out trucks, which can access the building through one of four doorways, will be positioned between 15 to 20 ft from the backhoe center point within the 20 ft wide load out truck lane. A 6.5 ft clearance is provided between the load out truck lane and the north and south building walls. A 27 ft clearance is provided between the outer bins and the east and west building walls. At this distance the backhoe unit will be able to make a full 180° swing angle in the direction of the wall with minimal reach adjustments.

The backhoe unit will be equipped with synthetic rubber track pads covering the steel track ribs. The track pads will allow the backhoe unit to move over the concrete floor without damaging the floor surface.

6.2.4 Stabilization Process Analyses

The table presented on Drawing No. 34 (Volume III) summarizes the stabilization process reagent flows based on a typical stabilization guideline and typical liquid and solid waste processing requirements. The 25,000 and 50,000 cft dry reagent storage silos and 10,000 gal tank capacities are based on providing sufficient reagent quantities for one week of normal stabilization operations. Reagent delivery piping sizes shown on Drawing No. 34 (Volume III) are preliminary and will be finalized when selection of the pumps and dry reagent pneumatic system are determined, however, these piping sizes are capable of meeting the daily reagent delivery requirements.

Ventilation system requirements will be determined in conjunction with the construction of the stabilization building. As previously mentioned, the building will be maintained under negative pressure during processing operations to ensure no visible dust is emitted. Additionally, each bin will have its own push-pull ventilation system to control dust inside the building during waste receiving, mixing, and loadout operations.

7.0 DRUM HANDLING UNIT

7.1 DRUM HANDLING UNIT DESIGN

7.1.1 General

The purpose of the drum handling unit is to provide storage capacity for drummed waste streams which will either be processed in the stabilization unit, placed in the landfill, or shipped to other waste processing centers such as incinerators or solvent recovery plants.

Drum handling unit design elements include drum handling unit layout, subgrade design; liner design; concrete floor design, and drainage sump design. This section describes each of these design elements.

7.1.2 Drum Handling Layout

Drawing No. 37 (Volume III) shows the layout of the drum handling unit floor plan and surrounding area. Additional details for the floor and floor drains are illustrated on Drawing Nos. 38 and 39 (Volume III).

As previously discussed, the drum handling unit entrance faces the north access road. Incoming trucks will enter the gravel lined apron and will back up to the loading dock areas. Once the truck unloading (or loading) operation is complete, the trucks will exit the unit via the same north access road. Parking areas for site personnel vehicles will be designated near the drum handling unit office. The gravel apron in front of the unit will not be used to stage waste haul trucks.

The drum handling building will be an open walled building with a roof which extends over the entire floor and truck docking areas. The roof structure will eliminate rainwater from entering the drum handling area. The open walls will provide ample ventilation inside the building, however, personnel involved with drum sampling and decanting activities will still be required to use supplied air respiratory systems. As discussed in Section 1.5, during winter months the site will experience temperatures as low as 14°F, with average daily temperatures of 36°F. Under the most severe conditions, freezing of liquids in the drums may be possible. Therefore, during periods of extended low temperatures, drums will be monitored for any sign of leakage or damage due to freezing. Damaged drums will be immediately placed in over pack units to ensure containment.

The 49,265 sf total floor area is divided into 7 drum storage cells with each cell having a separate drain, collection sump, and leak detection sump. Each 63-ft long by 52-ft wide cell is capable of storing 160 drums. Two of the cells are designated as TSCA cells and as such are required to be isolated from other drum storage cells. The 0.5 ft high by 3.5 ft wide walkway which surrounds the TSCA cell provides the necessary isolation. The remaining five cells are also separated by walkways. As shown on Drawing No. 38, (Volume III) drums will be placed in four rows, two drums deep. Two 12-ft wide aisles will provide access for the forklift to place and remove drums. Any drum spills or leakage will flow to the deep drain located along the centerline of the cell. The drain bottom slopes at 2 percent to the sumps located on the south side (rear) of the building. Any fluids in the sump will be removed through the LCRS and

LDRS sump riser pipes using a vacuum truck which can access the pipes from the rear of the building.

7.1.3 Subgrade Excavation, Liner System, Leachate Collection Sump, and Leak Detection Sump Design

Subgrade Excavation

The subgrade surface will be compacted to provide a suitable foundation for overlying drainage soils, geosynthetics, and the concrete floor and building foundation. Soft areas will be over excavated and replaced with compacted structural fill. Specification Section No. 02110, (Appendix C, Volume IV) describes site preparation, excavated soil classification and stockpiling, subgrade surface preparation and inspection, structural fill placement and compaction requirements, survey and quality control, and erosion control features.

Liner System

Drawing No. 37 (Volume III) indicates the areal extent of the primary liner system and the secondary liner components intended for the floor, drainage trenches and sumps, and anchor trench areas. In the floor area of the drum handling unit, the liner system is a double lined system consisting of (from bottom up), a prepared subgrade, a HDPE geomembrane secondary liner, a cushion geotextile, select subbase leachate collection and removal system layer, and the epoxy coated concrete floor which serves as the primary containment element. In the drainage trench areas, the liner system is a double lined system consisting of (from bottom up), a prepared subgrade, a secondary HDPE geomembrane liner, a geonet leak detection and removal system layer, and a primary geomembrane liner. Details of each liner component of the floor and drainage trench areas (from bottom up) are discussed below.

Floor Liner System

- *.5 ft thickness of prepared subgrade*

  The prepared subgrade component will provide a smooth stable surface suitable for placement of overlying geosynthetic materials. Specification Section 02119, (Appendix C, Volume IV) presents subgrade material requirements including particle size and moisture content, placement and compaction requirements, and survey and field quality control requirements.

- *60-mil thick high density polyethylene (HDPE) geomembrane liner (smooth)*

  The 60-mil HDPE geomembrane liner placed on top of the prepared subgrade is the secondary liner component. The HDPE geomembrane liner is a highly efficient barrier layer to restrict percolation of leachate into the subgrade. Specification Section 02775, (Appendix C, Volume IV) describes minimum geomembrane properties required, subgrade preparation and inspection, material transportation and handling procedures, deployment and seaming requirements, and material CQA.

- *12-oz non-woven cushion geotextile*

  The 12 non-woven geotextile layer placed on top of the geomembrane will provide cushion, as well as filtration qualities to protect the geomembrane from puncture and allow liquids percolating through the concrete floor and select subbase to drain to the sump area. Specification Section 02714, (Appendix C, Volume IV) describes minimum geotextile properties required, material transportation and handling procedures, deployment and seaming requirements, and material CQA.

- *0.5 ft thick select subbase*

  The select subbase will provide a stable foundation for the overlying concrete floor while allowing liquids from the overlying concrete floor that percolate through the concrete to drain to the sump area. Specification Section 02229, (Appendix C, Volume IV) presents material requirements including particle size and moisture content, placement and compaction requirements, and survey and field quality control requirements.

- *0.5 ft epoxy coated concrete floor*

  The drum handling unity concrete floor slopes towards one of the seven drainage trenches located within each cell. The drum handling unit secondary liner system completely encompasses the floor so that any leakage through the pad will also drain back into one of the drainage trenches. The concrete floor will be steel reinforced cast-in-place concrete. All joints in the concrete floor will be constructed with chemical resistant water stops and caulking sealer. Drawing No. 45 (Volume III) shows the rebar types and concrete details for the floor. Construction details for the floor are also called out in Specification Section 03100, Section 03200, 03290, and Section 03300 in Appendix C, Volume IV. Specification Section 07920, (Appendix C, Volume IV) describes the concrete epoxy coating requirements.

Drainage Trench Liner System

- *0.5 ft thickness of prepared subgrade*

  The prepared subgrade component will provide a smooth stable surface suitable for placement of overlying geosynthetic materials. Specification Section 02119, (Appendix C, Volume IV) presents subgrade material requirements including particle size and moisture content, placement and compaction requirements, and survey and field quality control requirements.

- *60-mil thick high density polyethylene (HDPE) secondary geomembrane liner (smooth)*

  The 60-mil HDPE liner placed on top of the prepared subgrade is the secondary liner component. The HDPE geomembrane liner is a highly efficient barrier layer to restrict percolation of leachate into the subgrade. Specification Section 02775, (Appendix C, Volume IV) describes minimum geomembrane properties required, subgrade preparation and inspection, material transportation and handling procedures, deployment and seaming requirements, and material and CQA.

- *Geonet leak detection and removal system layer (transmissivity ≥ $5x10^{-3}$ m^2/sec)*

  The high transmissivity geonet drainage layer provides a means for leak detection and removal fluids percolating through the primary geomembrane layer. Flow calculations discussed in Section 7.2.1 and presented in Appendix E indicate that the geonet is capable of removing fluids such that ponding on the secondary geomembrane liner can be avoided. Specification Section 02712 describes minimum geonet properties required, material transportation and handling procedures, deployment and seaming requirements, and material and construction quality assurance.

- *60-mil thick high density polyethylene (HDPE) primary geomembrane liner (smooth)*

  The 60-mil HDPE geomembrane liner placed on top of the geonet layer serves as the primary liner component in the drainage trench area. The HDPE geomembrane liner is a highly efficient barrier layer to restrict percolation of fluids from entering the into the geosynthetic layers below. Specification Section 02775 (Appendix C, Volume IV) describes minimum geomembrane properties required, subgrade preparation and inspection, material transportation and handling procedures, deployment and seaming requirements, and material and CQA.

Leachate Collection and Removal Sump and Leak Detection and Removal Sump Design

The leachate collection and removal system and leak detection and removal system (LDRS) each have a separate sump from which fluids can be collected and removed. The liner components in the drainage trench system continue into the sumps, however, in order to provide adequate volume to efficiently operate removal pumps, a drainage gravel layer is incorporated in the sumps. Drawing No. 39 (Volume III) illustrates the sump layout and cross-sections and the geosynthetic component arrangements. The LCRS and LDRS slope riser pipes enter their respective sumps at the sump base and are in the same vertical plane. The slope riser trench arrangement enables the LDRS slope riser pipe to penetrate overlying geosynthetic liner elements at the crest of the sump rather than at its base. The LCRS sump and drain has a total fluid capacity of 2,110 gallons (after accounting for gravel). Ten percent of the cell water volume is 880 gallons based on a storage capacity of 160 55-gallon drums. The LDRS sump and drain has a total fluid capacity of 41 gallons (after accounting for gravel). Because these sumps are close to the surface and any fluids in the sump can be observed by looking down the riser pipes, fluid level instrumentation is not required.

7.2 DRUM HANDLING UNIT DESIGN ANALYSES

7.2.1 Geosynthetics Strength and Performance Analyses

7.2.1.1 Geomembranes

The 60 mil HDPE geomembrane located beneath the concrete floor area of the drum handling building is protected by an overlying geotextile and select subbase material. Below this geomembrane is a 0.5 ft thickness of prepared subbgrade. Specification Section 02119, (Appendix C, Volume IV) requires this subgrade material to have a maximum particle size of 1 inch. Specification Section 02775, (Appendix C, Volume IV) requires that the surface of the

prepared subgrade be smooth drum compacted and free of any foreign objects which might damage the overlying geomembrane. Considering that the loading conditions of the geomembrane in this arrangement due to the overlying sand, concrete floor, drums, and forklift wheeling loading do not approach the loading conditions evaluated in Calculation No. E-18, Appendix E, Volume V, the geomembrane will be adequately protected against puncture.

The geomembranes located in the drain areas and the drain sumps will not be subjected to significant overburden pressures. Drainage in the sump will not be compacted.

7.2.1.2 Geonet

The geonet layer in the drain areas and the drain sumps will not be subjected to significant overburden pressures which might reduce flow capacity. Additionally, the 2 percent slope of the drain system provides adequate relief to cause fluid flow to the sumps.

7.2.1.3 Geotextiles

Calculation No. E-20, Appendix E, Volume VI evaluates the Apparent Opening Size (AOS) of several available geotextile products with respect to the silty sands and Upper Dockum materials found at the site. Based on this calculation, the 7 oz nonwoven geotextile called for in the specifications will adequately filter fines from the foundation sand material (SM) .

7.2.1.4 Anchor Trench Design

The purpose of the anchor trench in the drum handling unit is to restrict movement of the geosynthetics during installation of the select subbase and concrete layers. Pullout capacity due to settlement is not a relevant concern for this facility.

7.2.2 Drum Handling Unit Concrete Floor

The floor of the drum handling building may be exposed to untreated waste material and is required to serve as the primary containment system. All joints in the concrete floor of the stabilization building will be constructed with chemical resistant water stops. In addition, a chemical resistant epoxy coating will be placed on the surface of the floor to further restrict potential liquid penetration into the concrete.

Drawing No. 45 (Volume III) shows the rebar types and concrete details for the floor. Construction details for the floor are also called out in Specification Section 03100, Section 03200, Section 03290 and Section 03300 found in Appendix C, Volume IV. Specification Section 07920, (Appendix C, Volume IV) describes the concrete epoxy coating requirements.

8.0 LIQUID WASTE STORAGE UNIT

8.1 LIQUID STORAGE UNIT DESIGN

8.1.1 General

The purpose of the liquid waste storage unit is to provide storage capacity for bulk liquid wastes which will either be processed in the stabilization unit or to be placed in the evaporation pond.

Liquid waste storage unit design elements include liquid storage unit layout, storage tank leak containment design; piping and pumping design; and concrete tank pad. This section describes each of these design elements.

8.1.2 Unit Layout

Drawing No. 40 (Volume III) shows the arrangement of the liquid waste storage tanks, piping, and tank containment pad and surrounding area. The four double lined HDPE poly tanks (9,000 gallon capacity each) will each have its own concrete pad area, discharge and intake pump, piping and control system.

As previously discussed, access to the liquid waste storage area is provided on the east, west, and north sides of concrete tank pads. Tanker trucks can use either the north access road or the road to the east of the liquid waste storage area.

Because the storage tanks are double walled, the concrete pad is not considered a liner element or a primary or secondary containment feature. The concrete pad is included as an additional measure to prevent the spread of fluid should leaks or spills occur at discharge piping connections and pumps located within the pad.

Discharge pipes to the stabilization building will be elevated double walled pipes.

8.1.3 Tank Leakage Containment Design

Drawing No. 40 (Volume III) illustrates the double walled poly tank system. The outer tank will be covered to prevent precipitation accumulation. The inner tank will not be covered. The tanks will be equipped with flexible connections at pipe penetrations between the inner and outer tanks and drainage ports in the outer tank. Chemical resistant gaskets will be used at all tank flanges. Liquids containing solvents such as MEK, toluene, xylene, diesel, or gasoline in concentrations greater than 15% will not be placed in the tanks. Tank tie down details will be developed from manufacturer's shop drawings when the tank is purchased.

The 15,500 gallon outer tank will contain the total volume of the 9,000 gallon inner tank should a leak in the inner tank occur. Each tank system will be equipped with graduated sight gauges allowing visual determination of fluid volume in the inner tank. In addition, to prevent tank overfilling or unnecessary pumping, high level and low level cutoff switches are included.

The tanks will be vented to the atmosphere to prevent internal pressure buildup. Protected ladders running up the outside of the outer tank will provide access to openings in the top tank.

Specification Section 13205, (Appendix C, Volume IV) discusses the tank material and installation requirements. Construction details for the concrete tank pad are called out in Specification Section 03100, Section 03200, Section 03290, and Section 03300 found in Appendix C, Volume IV.

8.2 LIQUID WASTE STORAGE UNIT DESIGN ANALYSES

8.2.1 Tank Design, Testing, and Quality Control Standards

The liquid waste storage unit poly tanks will be manufactured by Central California Container Inc. Performance tests, material property tests, and design standards provided by the manufacturer include the following:

- **Performance Requirement Tests**
  Low Temperature Dart Impact Test (ASTM D-1998)
  O-xylene-Insoluble Faction (Gel Test) (ASTM D-1998)
  Ultrasonic Gauge Wall Thickness Test (ASTM D-1998)
  Hydrostatic Pressure Test (ASTM D1998)

- **Material Properties Tests**
  Environmental Stress Crack Resistance (ASTM D-1693)
  Elongation @ Break, Tensile Strength (ASTM D-638)
  UV Stabilizer Compounded into Resin (ASTM D-1998)

- **Design Standards**
  Wall Thickness Calculations (ASTM D01998)
  Seismic & Wind Restrain (UBC)
  Finite Element Analysis (ADE-92)

The tank manufacturer will provide recommended tank tie down details for review and approval by a registered New Mexico professional engineer prior to tank installation.

8.2.2 Pumping and Piping

Drawing No. 40 (Volume III) illustrates the pumping, piping, and control feature arrangement for the liquid waste receiving and storage area. High and low level cutoffs will prevent tank overfilling and pump burnout. The flow meter will record fluid volumes pumped into and out of the tank.

All piping installed at the liquid waste storage unit will be double walled.

8.2.3 Concrete Tank Pad

The liquid waste storage unit concrete pad is not a secondary containment feature, however, it will provide containment for small leaks.

Drawing No. 45 (Volume III) shows the rebar types and concrete details for the floor. Construction details for the floor are also called out in Specification Section 03100, Section 03200, and Section 03300 found in Appendix C, Volume IV. Specification Section 07920, (Appendix C, Volume IV) describes the concrete epoxy coating requirements.

9.0 TRUCK WASH UNIT

9.1 TRUCK WASH UNIT DESIGN

9.1.1 General

DOT approved roll-off trucks delivering bulk solid waste for landfill disposal will have plastic bed liners which will isolate the waste from the roll-off container interior. As waste loads are dumped, these bed liners can become damaged exposing the roll-off container to the waste material. If this material cannot be removed from the roll-off container at the landfill waste placement face, then the truck will be required to proceed to the truck wash unit, where the container will be washed out. Also, during rainy periods, mud from access roads or daily cover soil can collect on the wheels and undercarriages of waste haul trucks exiting the landfill. Similarly, if this material cannot be removed from the truck while in the landfill, then the truck will be required to proceed to the truck wash unit for cleanup prior to exiting the site. Landfill operations equipment such as waste compactors, scrapers, water trucks, and other vehicles may also require similar cleanup upon exiting the landfill. Because potentially contaminated materials may be washed from the roll-off container or from undercarriage recesses while at the truck wash unit, a double liner containment system has been designed to contain wash water and wash residues.

The truck wash unit design elements presented here include the facility layout, liner system, and sump and leak detection system.

9.1.2 Facility Layout

Drawing No. 44 (Volume III) illustrates the truck wash unit layout. As previously discussed, access to the truck wash unit is from the west landfill perimeter road. Exiting traffic will proceed to the north access road. The unit is designed with two wash bays: a heavy equipment bay and a roll-off truck bay; and a water storage area. Both wash bays drain to a common sump area which will collect wash water and residue. Poly tanks and pumps, located in the water storage area provide storage and pumping capacity for clean and used wash water.

The truck wash sump drains to a collection point at its north end where water will be pumped from the sump into a clarifier. Residues remaining in the sump can be removed using a front-end-loader which has access from the heavy equipment wash bay. Oils, grease, and fine sediments will be removed from the wash water in the clarifier before being pumped to a double lined poly tank. Wash water and residues will be chemically analyzed and handled as dictated by their characteristics.

The entire concrete floor of the truck wash unit, which acts as primary containment, is designed with a geosynthetic secondary HDPE geomembrane liner and leak detection and removal system. The concrete floor will be coated with epoxy similar to the drum handling unit.

The roll-off truck bay is equipped with a truck barrier, tailgate lift, moveable wash platforms, and three high pressure hose reel and nozzle assemblies. The high pressure pump and delivery system can either be a single fixed installation or be made up of several portable units. Roll-off trucks will back into the bay to the truck barrier and lift the truck bed as if to dump. The

tailgate lift will be attached and the tailgate raised to expose the inside of the roll-off container. Truck wash personnel will then wash out the inside of the container using the high pressure wash system. Wash water and residue will then be washed from the concrete floor into the sump area. If necessary, moveable platforms can be positioned next to the truck and the truck bed can be washed from openings in its top surface.

The heavy equipment wash bay will be constructed with steel rail or I-beams incorporated into the concrete floor of this bay to resist damage by heavy equipment tracks. Wash water and residue will flow to the sump area and will be removed as discussed above.

9.1.3 Subgrade Excavation, Liner System, Sump and Leak Detection System Design

Subgrade Excavation

The subgrade surface will be compacted to provide a suitable foundation for overlying soils, geosynthetics, concrete floor, and building foundation. Soft areas will be overexcavated and replaced with compacted structural fill. Specification Section No. 02110 (Appendix C, Volume IV) describes site preparation, excavated soil classification, stockpiling, subgrade surface preparation and inspection, structural fill placement and compaction requirements, survey and quality control, and erosion control features.

Liner System

Drawing No. 44, sheet 1 of 2, (Volume III) indicates the aerial extent of the liner system and the liner components intended for the floor, sump, and anchor trench areas. The liner system consists of (from bottom up), a prepared subgrade, a HDPE geomembrane secondary liner, a geocomposite leak detection and removal system (LDRS) layer, a foundation sand layer, and the epoxy coated concrete floor which serves as the primary containment element. Details of each liner component are discussed below.

Floor Liner System

- *0.5 ft thickness of prepared subgrade*

  The prepared subgrade component will provide a smooth stable surface suitable for placement of overlying geosynthetic materials. Specification Section 02119, (Appendix C, Volume IV) presents subgrade material requirements including particle size and moisture content, placement and compaction requirements, and survey and field quality control requirements.

- *60-mil thick high density polyethylene (HDPE) geomembrane liner (textured)*

  The 60-mil HDPE geomembrane liner placed on top of the prepared subgrade is the secondary liner component. The HDPE geomembrane liner is a highly efficient barrier layer to restrict percolation of leachate into the subgrade. Specification Section 02775, (Appendix C, Volume IV) describes minimum geomembrane properties required, subgrade preparation and inspection, material transportation and handling procedures, deployment and seaming requirements, and material construction quality assurance.

- *Geocomposite*

  * A geocomposite leak detection and removal system (LDRS) layer (transmissivity ≥ 2.2 x 10^{-4} m^2/sec) consisting of:
    - ◊ A 7 oz. geotextile (non-woven)
    - ◊ A geonet
    - ◊ A 7 oz. geoxtile (non-woven)

  The high transmissivity geocomposite LDRS layer provides a means to detect and remove fluids percolating through the epoxy coated concrete floor. Flow calculations discussed in Section 3.2.8 and presented in Appendix E indicate that the geocomposite is capable of removing fluids such that ponding on the geomembrane liner can be avoided. Specification Section 02712, (Appendix C, Volume IV) describes minimum geonet properties required, material transportation and handling procedures, deployment and seaming requirements, and material and construction quality assurance.

- *A 1 ft thick foundation sand layer*

  Specification Section 02231, (Appendix C, Volume IV) presents foundation sand material requirements including particle size and moisture content, placement and compaction requirements, and survey and field quality control requirements.

- *One foot thick epoxy coated concrete floor*

  The truck wash unit floor slopes towards the sump located between the two bay areas. The truck wash unit secondary geomembrane liner system completely encompasses the floor so that any leakage through the concrete floor will be captured in the LDRS. The concrete floor will be steel reinforced cast-in-place concrete. All joints in the concrete floor will be constructed with chemical resistant water stops and caulking sealer. Construction details for the floor will be provided similar to those presented in Specification Section 03100, Section 03200, Section 03290, and Section 03300 found in Appendix C, Volume IV. Specification Section 07920, (Appendix C, Volume IV) describes the concrete epoxy coating requirements.

Leak Detection and Removal System (LDRS) Sump Design

The LDRS geocomposite drains to a separate sump from which fluids can be detected and removed. In order to provide adequate volume to efficiently operate removal pumps, a drainage gravel layer has been incorporated in the sump. Drawing No. 44 (Volume III) illustrates the sump layout and cross sections and the geosynthetic component arrangements. A vertical riser pipe is located in the center of the sump and provides space for the fluid removal pump. The LDRS sump has a total fluid capacity of 72 gallons (after accounting for gravel). Because this sump is close to the surface and any fluids in the sump can be observed by looking down the LDRS riser pipe, fluid level instrumentation is not required. Fluids in the sump will be removed by pumping into the clarifier or by vacuum truck.

9.2 TRUCK WASH UNIT DESIGN ANALYSES

9.2.1 Geosynthetics Strength and Performance

Geomembrane, geocomposite, and geotextile material installation in the truck wash unit is similar to the installations in the drum handling unit. Rationale and computations pertaining to geomembrane puncture and tearing, geocomposite flow capability, and geotextile cushioning and filtration performed for the drum handling unit, which are applicable to the truck wash unit, are not repeated.

9.2.2 Tank Design, Testing, and Quality Control Standards

Tanks and piping intended to store and convey potentially contaminated wash water will be double lined installations similar to the liquid waste storage area tanks. Section 8.2 presents a discussion of this equipment which also applies to the truck wash unit. Control features such as LL, HL values, meters, etc for this system are identified on Drawing No. 44, sheet 1 of 2 (Volume III).

The clean water supply tank and piping will be single walled installations.

10.0 REFERENCES

1. Algermissen, S.T., Perkins, D.M., Thenhaus, P.C., Hanson, S.L., and Bender, B.L., 1982. *Probabilistic Estimates of Maximum Acceleration and Velocity in Rock in the Contiguous United States,* Open-File Report 82-1003, United States Department of the Interior Geological Survey.

2. American Society for Testing and Materials Symposium, 1984. ASTM Technical Publication: *Hydraulic Barriers in Soil and Rock.*

3. American Society for Testing and Materials, 1990. *Geosynthetic Testing for Waste Containment Applications.*

4. American Society for Testing and Materials, 1992. *Slurry Walls: Design, Construction, and Quality Control.*

5. American Society for Testing and Materials, 1994. *Hydraulic Conductivity and Waste Contaminant Transport in Soil.*

6. American Society for Testing and Materials, 1997. *Testing and Acceptance Criteria for Geosynthetic Clay Liners.*

7. American Society of Civil Engineers, 1990. *Waste Containment Systems: Construction, Regulation, and Performance.*

8. American Society of Civil Engineers, 1995. *Landfill Closures Environmental Protection and Land Recovery.*

9. Barfield, B.J., Warner, 1995 and Haan, C.T. (1995). *"Applied Hydrology and Sedimentology for Disturbed Areas."* Chapter 5 (Oklahoma Technical Press, Oklahoma).

10. Barfield, Warner, and Haan, 1981. *Applied Hydrology and Sedimentology for disturbed Areas.* Oklahoma Technical Press, Stillwater, Oklahoma.

11. Bear, J., 1979. *"Hydraulics of Groundwater",* Department of Civil Engineering Technician - Israel Institute of Technology, Haifa Israel.

12. Benson, Craig, H., Zhai, Huaming, Wang, Xiaodong, *"Estimating Hydraulic Conductivity on Compacted Clay Liners", Journal of Geotechnical Engineering, Vol. 120, No. 2,* February, 1994.

13. Bonaparte, R. And Gross, B.A., *"Field Behavior of Double-Liner Systems"*, Waste Containment Systems Construction, Regulation, and Performance, ASCE Geotechnical Special Publication No. 26, November 1990, pp. 52-83.

14. Bowles, Joseph E., 1988. *Foundation Analysis and Design, Fourth Edition,* Peoria, IL.

15. Burtell, R., TerraMatrix, Inc., Engineering and Environmental Services, January, 1994. *Solid Waste Disposal Facility Criteria, Technical Manual*

16. Caterpillar Tractor Co., 1985. *Caterpillar Performance Handbook,* Peoria, IL.

17. Department Of Transportation Regulations

18. Daniel, D. and Koerner, R., 1995. *Waste Containment Facilities Guidance for Construction, Quality Assurance and Quality Control of Liner and Cover Systems.*

19. Daniel, D. And Koerner, R., 1997. *Waste Containment Facilities Guidance for Construction, Quality Assurance and Quality Control of Liner and Cover Systems.*

20. Department of Civil and Environmental Engineering, Utah State University, Logan, UT, *Structural Performance of Perforated and Slotted High-Density Polyethylene Pipes Under High Soil Cover,* 1987.

21. Departments of the Army and the Air Force, 1966. *"Calculation Methods for Determination of Depths of Freeze and Thaw in Soils" - TM 5-8526.*

22. Department of the Navy, Naval Facilities Engineering Command, 1983. *"Soil Mechanics"*, Design Manual 7.1.

23. Department of the Navy, Naval Facilities Engineering Command, 1982. *"Foundations and Earth Structures"*, Design Manual 7.2.

24. Department of the Navy, Naval Facilities Engineering Command, 1983. *"Soil Dynamics, Deep Stabilization, and Special Geotechnical Construction"*, Design Manual 7.3.

25. Environmental Protection Agency Seminar Publication. *Requirements for Hazardous Waste Landfill Design, Construction, and Closure.*

26. Giroud, J.P., Gross, B.A., and Darrasse, J., *"Flow in Leachate Collection Layers"* to be published, 1993.

27. Gross, B.A., Bonaparte, R., and Giroud, J.P., *"Evaluation of Flow from Landfill Leakage Detection Layers"*, Proceedings, Fourth International Conference on Geotextiles, Vol. 2, The Hague, June 1990, pp. 481-486.

28. Hewitt, R.D., Daniel, D.E., 1996. *Hydraulic Conductivity of Geosynthetic Clay Liners Subjected to Freeze Thaw,* Journal of Geotechnical Engineering. To be published.

29. Holtz, Robert D., Ph.D, P.E., Kovacs, Ph.D., P.E., 1981. *An Introduction to Geotechnical Engineering.*

30. Hsai-Yang Fang, Ph.D., 1991. Foundation Engineering Handbook, Second Edition.

31. Joint Committee Report of AASHTO-AGC-ARTBA, American Association of State, Highway and Transportation Officials, 1991. *Report on Task Force 25,* Washington DC.

32. Jumikis, Alfreds R., 1983. Series on Rock and Soil Mechanics, Vol. 7, *"Rock Mechanics, Second Edition".*

33. Koerner, R.M., 1994. *"Designing with Geosynthetics, Third Edition"*, Prentice Hall, Englewood Cliffs, NJ.

34. Koerner, R., and Richardson, G. 1987. *Geosynthetic Design Guidance for Hazardous Waste Landfill Cells and Surface Impoundments.*

35. Koerner, R., 1990. *Designing with Geosynthetics, 2nd Ed.* Prentice Hall, Englewood Cliffs, NJ.

36. Kraus, J.F., Genson, C.H., Erickson, A.E., Chaberlin, F.J., 1997. *Freeze-Thaw Cycling and Hydraulic Conductivity of Bentonic Barriers, Journal of Geotechnical and Geoenvironmental Engineering.*

37. Merrit, F., 1983. *Standard Handbook for Civil Engineers, Third Edition*, McGraw-Hill Inc.

38. Murphy, W.L. and Gilbert, P.A. (1985). *"Settlement and cover subsidence of hazardous waste landfills."* U.S. Environmental Protection Agency, EPA/600/2-85/035, April 1985.

39. Phillips Driscopipe, Inc., a Subsidiary of Phillips 66 Company, 1991. *Systems Design*

40. Renard, K.G., Foster, G.R., Weosies, G.A., McCool, D.K., Yoder, D.C., coordinators, 1996. *Predicting Soil Erosion by Water, A Guide to Conservation Planning with the Revised Universal Soil Loss Equation (RUSLE).* Agriculture Handbook No. 703, U.S. Department of Agriculture.

41. Schroder, P.R. (1989). *"The Hydrologic Evaluation of Landfill Performance (HELP) Model."* USACE Waterways Experiment Station, Vicksburg, MS, Office of Research and Development, U.S. Environmental Protection Agency, Cincinnati, OH, Version 2.05, September, 1989.

42. Schwope, A., Costas, P., Lyman, W., Arthur D. Little, Inc., October, 1985. *Resistance of Flexible Membrane Liners to Chemicals and Wastes.*

43. Seed, Raymond B., Mitchell, James K., and Seed, H. Bolton, 1988. *Slope Stability Failure Investigation: Landfill Unit B-19, Phase I-A, Kettleman Hills, California*, College of Engineering, Department of Civil Engineering, University of California Berkeley, California, Report No. UCB/GT/88-01.

44. Sharma, S. (1994). *"EXTABL: An Integrated Slope Stability Analysis Program for Personal Computers."* Interactive Software Designs, Inc., Moscow, ID.

45. TerraMatrix/Montgomery Watson, SM Stoller Corp., Triassic Park Waste Disposal Facility RCRA Permit Application Volumes 1 and 2, December 1997.

46. Terzaghi, K., and Peck, R., 1967. *Soils Mechanics in Engineering Practice*

47. Title 40 – Code of Federal Regulations (40 CFR), Part 264.

48. Urban Hydrology For Small Watersheds, TR-55, 1986, Soil Conservation Service, USDA.

49. U.S. Environmental Protection Agency, 1984. *Permit Applicants' Guide Manual for Hazardous Waste Land Treatment Storage and Disposal Facilities.*

50. U.S. Environmental Protection Agency, December, 1987. *Geosynthetic Design Guidance for Hazardous Waste Landfill Cells and Surface Impoundments.*

51. U.S. Environmental Protection Agency, 1988. *Lining of Waste Containment and Other Impoundment Facilities*, Part 1 of 2.

52. U.S. Environmental Protection Agency, 1988. *Lining of Waste Containment and Other Impoundment Facilities*, Part 2 of 2.

53. U.S. Environmental Protection Agency, 1988. Seminar Presentations - *Requirements for Hazardous Waste Landfill Design, Construction and Closure.*

54. U.S. Environmental Protection Agency (1989a). *"Technical Guidance Document: Final Covers on Hazardous Waste Landfills and Surface Impoundments."* EPA/530-SW-89-047, July 1899.

55. U.S. Environmental Protection Agency, (1989b). *"Seminar Publication: Requirements for Hazardous Waste Landfill Design, Construction and Closure."* EPA/625/4-89/022, August 1989.

56. U.S. Environmental Protection Agency, July, 1990. Seminars - *Design and Construction of RCRA/CERCLA Final Covers,* Washington, DC.

57. U.S. Environmental Protection Agency, 1991. *Technical Guidance Document: Inspection Techniques for the Fabrication of Geomembrane Field Seams.*

58. U.S. Environmental Protection Agency, 1992(a). *Action Leakage Rates for Leak Detection Systems.*

59. U.S. Environmental Protection Agency, 1992(b). *"Action Leakage Rates for Leak Detection Systems"*, EPA/580-R-92004, Jan. 1992, 69 p.

60. U.S. Environmental Protection Agency, 1992(c). *"Rules and Regulations"*, Federal Register, Volume 57, No. 19.

61. U.S. Environmental Protection Agency, 1996. *Technical Guidance Document,. Construction Quality Assurance for Hazardous Waste Land Disposal Facilities.*

62. Vancouver Geotechnical Society, 6th Annual Symposium, 1991. *Geosynthetics: Design and Performance., Vancouver, B.C.*

63. Warner, R.C., Schwab, P.J., 1992, *SEDCAD + Version 3.*

DESIGN DRAWINGS
TRIASSIC PARK WASTE DISPOSAL FACILITY
CHAVES COUNTY, NEW MEXICO

DECEMBER 1997 (Revised November 1998)

RCRA PART B APPLICATION

Not For Construction (See Notes Drawing 2)

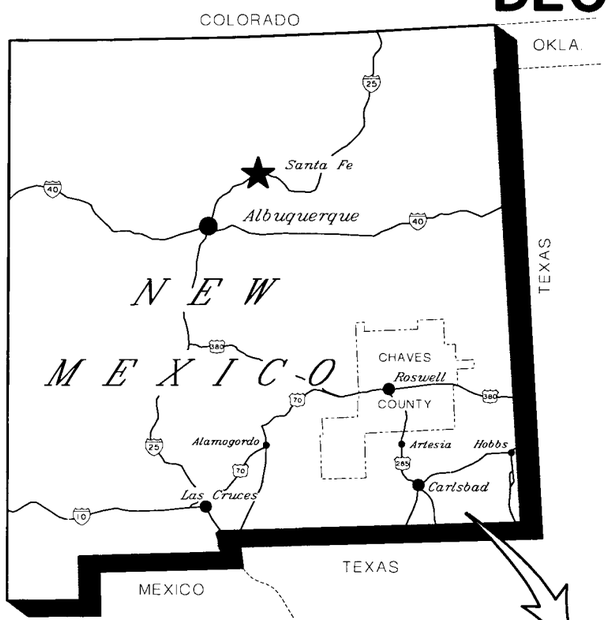

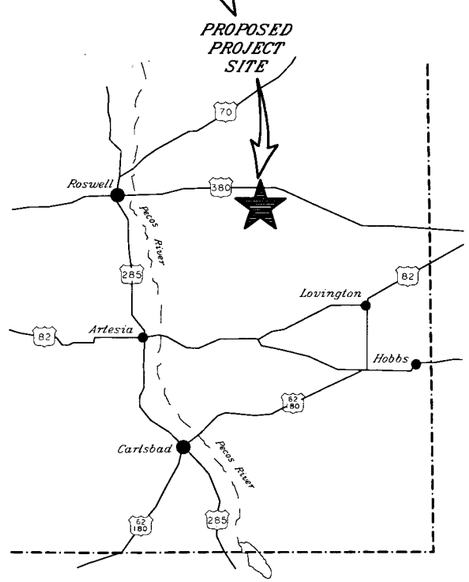

LIST OF DRAWINGS

DRAWING NO.	DRAWING SERIES
1 - 2	GENERAL
3 - 5	FACILITY
6 - 27	LANDFILL
28 - 32	EVAPORATION POND
33 - 36	STABILIZATION UNIT
37 - 39	DRUM HANDLING UNIT
40	LIQUID WASTE STORAGE AREA
41 - 43	TRUCK ROLL-OFF AREA
44	TRUCK WASH LAYOUT AND DETAILS
45	CONCRETE AND GRATING DETAILS

PATRICK G. CORSER NEW MEXICO 12236 REGISTERED PROFESSIONAL ENGINEER

PROFESSIONAL ENGINEER'S STATEMENT

I, Patrick G. Corser, state that this map was prepared under my supervision and all the information presented hereon is true and correct to the best of my knowledge and information.

11/5/98 — Patrick Corser

Date — *Patrick G. Corser, NM P.E. 12236*

PREPARED BY:

TerraMatrix
MONTGOMERY WATSON
Mining Group

Sheet 1 Of 2 Sheets
DWG.: GANDY-COVER

DRAWING No.:	REV.
1	1

DESIGN DRAWINGS
TRIASSIC PARK WASTE DISPOSAL FACILITY
CHAVES COUNTY, NEW MEXICO

DECEMBER 1997 (Revised November 1998)

RCRA PART B APPLICATION

Not For Construction (See Notes Drawing 2)

LIST OF DRAWINGS

	DRAWING NO.	DRAWING TITLE
GENERAL	1	COVER SHEET *(2 Sheets)*
	2	INDEX, LEGEND AND GENERAL NOTES
FACILITY	3	EXISTING TOPOGRAPHY
	4	FACILITY LAYOUT
	5	INITIAL SITE GRADING PLAN
LANDFILL	6	ULTIMATE LANDFILL EXCAVATION PLAN
	7	LANDFILL CROSS-SECTIONS
	8	DETAILED EXCAVATION PLAN - PHASE 1A
	9	TOP OF PROTECTIVE SOIL LAYER - PHASE 1A
	10	FILLING PLAN - PHASE 1A
	11	PHASE 1A CROSS-SECTIONS
	12	LINER DETAILS
	13	COLLECTION BASIN PLAN AND DETAILS
	14	LANDFILL ACCESS RAMP DETAILS
	15	SUMP PLAN VIEW - PHASE 1A
	16	SUMP CROSS-SECTIONS - PHASE 1A
LANDFILL	17	TYPICAL SUMP DETAIL CROSS-SECTION
	18	VADOSE, LDRS, LCRS CROSS-SECTIONS AND DETAILS
	19	CREST RISER PAD AND LEACHATE STORAGE TANK PLAN VIEW AND CROSS-SECTIONS *(2 Sheets)*
	20	VERTICAL RISER DETAILS *(2 Sheets)*
	21	FINAL GRADING PLAN - TOP OF WASTE CONTOURS
	22	FINAL GRADING PLAN - TOP OF VEGETATIVE COVER CONTOURS
	23	FINAL COVER DETAILS
	24	INTERPHASE BERM SECTION
	25	SURFACE WATER CONTROL FEATURES *(2 Sheets)*
	26	TRAFFIC PLAN *(2 Sheets)*
	27	PERIMETER ROAD DETAILS
EVAPORATION POND	28	EVAPORATION POND SUBGRADE CONTOURS
	29	EVAPORATION POND CLAY LINER CONTOURS
	30	EVAPORATION POND CROSS-SECTIONS
	31	EVAPORATION POND TRUCK DISCHARGE STATION *(2 Sheets)*
	32	EVAPORATION POND LDRS AND VADOSE PLAN AND DETAILS
STABILIZATION UNIT	33	STABILIZATION UNIT GENERAL ARRANGEMENT
	34	STABILIZATION UNIT WASTE FLOW DIAGRAM
	35	STABILIZATION UNIT BIN DESIGN
	36	STABILIZATION BIN DESIGN DETAILS *(2 Sheets)*
DRUM HANDLING UNIT	37	DRUM HANDLING UNIT GENERAL ARRANGEMENT
	38	DRUM HANDLING UNIT DETAILS
	39	DRUM HANDLING UNIT SUMP DETAILS *(2 Sheets)*
	40	LIQUID WASTE RECEIVING AND STORAGE UNIT LAYOUT
TRUCK ROLL-OFF AREA	41	TRUCK ROLL-OFF AREA DRAINAGE SURFACE CONTOURS
	42	TRUCK ROLL-OFF AREA SUBGRADE CONTOURS
	43	TRUCK ROLL-OFF AREA LINER DETAILS *(2 Sheets)*
	44	TRUCK WASH LAYOUT AND DETAILS
	45	CONCRETE AND GRATING DETAILS

PATRICK G. CORSER
NEW MEXICO
12236
REGISTERED PROFESSIONAL ENGINEER

PROFESSIONAL ENGINEER'S STATEMENT

I, Patrick G. Corser, state that this map was prepared under my supervision and all the information presented hereon is true and correct to the best of my knowledge and information.

11/5/98 — Patrick Corser
Date — *Patrick G. Corser, NM P.E. 12236*

PREPARED BY:

TerraMatrix
MONTGOMERY WATSON
Mining Group

Sheet 2 Of 2 Sheets
DWG: GANDY-COVER2

DRAWING No.	REV.
1	1

LEGEND

GENERAL LINES

- FACILITY BOUNDARY AND ACTIVE FACILITY FENCE
- 4150 EXISTING INDEX CONTOUR
- EXISTING INTERMEDIATE CONTOUR
- SUBGRADE EXCAVATION CONTOURS
- TOP OF CLAY LINER
- TOP OF SUBGRADE LAYER
- TOP OF PROTECTIVE SOIL
- TOP OF WASTE
- TOP OF EXISTING SURFACE
- EXISTING GRAVEL ROAD
- EXISTING DRAINAGE
- SECTION LINE
- EDGE OF REGRADE
- GRADE BREAK LINE
- NEW SURFACE WATER DRAINAGE DITCHES
- EDGE OF LINER

GEOSYNTHETIC TYPES

- GEOMEMBRANE
- GEOTEXTILE
- GEONET
- GEOCOMPOSITE
- GCL

MISCELLANEOUS

- FENCE
- SLOPE
- SECTION CORNER
- SURVEY CONTROL POINT
- CULVERT
- Φ NOMINAL DIAMETER

FILL PATTERNS

- CLAY LINER
- DRAINAGE GRAVEL
- FOUNDATION/PIPE BEDDING SAND
- SUBGRADE
- PREPARED SUBGRADE
- SUBBASE
- PROTECTIVE SOIL
- VEGETATIVE COVER
- CONCRETE
- ROAD-BASE
- STRUCTURAL FILL
- ALLUVIAL DEPOSITS
- UPPER DOCKUM
- LOWER DOCKUM
- WASTE
- SELECT SUBBASE

KEY

A 6|6 — A' 6|6

CROSS-SECTION LOCATION

A 6|6

DETAIL/SECTION NUMBER

DRAWING No. WHERE DETAIL/SECTION IS REFERENCED

DRAWING No. WHERE DETAIL/SECTION IS SHOWN

GENERAL NOTES

1. DESIGN DRAWINGS WERE PREPARED FOR PART "B" PERMIT SUBMITTAL.
2. DESIGN DRAWINGS TO BE USED IN CONJUNCTION WITH CONSTRUCTION SPECIFICATIONS AND CONSTRUCTION QUALITY ASSURANCE PLAN.
3. THIS SET OF DRAWINGS TO BE USED FOR PART B PERMIT APPLICATION. DRAWINGS ARE NOT TO BE USED FOR CONSTRUCTION. ADDITIONAL WORK TO BE COMPLETED TO ISSUE DRAWINGS FOR CONSTRUCTION INCLUDE THE FOLLOWING:
   - RECEIPT OF PART B PERMIT
   - SURVEY GRID POINT LISTING FOR CONSTRUCTION STAKING
   - REVIEW AND APPROVAL OF CONTRACTOR EQUIPMENT, MATERIALS, PROCEDURES, SUBMITTALS AND SHOP DRAWINGS.
4. TOPOGRAPHY FROM AERIAL SURVEYS PERFORMED AUGUST, 1997, KOOGLE & POULS ENGINEERING.
5. PROTECTIVE SOIL CONSISTS OF SELECT ONSITE SOILS.
6. GEOCOMPOSITE CONSISTS OF GEOTEXTILE BONDED TO GEONET.
7. GEOMEMBRANE IS A MINIMUM 60 mil HDPE.
8. 48-in. WIDE USED CONVEYOR BELT SHALL NOT HAVE STEEL WIRE REINFORCEMENTS OR OTHER PROTRUSIONS WHICH MAY DAMAGE UNDERLYING GEOMEMBRANE.
9. EVAPORATION POND TOPOGRAPHY ON DRAWING 29 IS TOP OF CLAY LINER.
10. EVAPORATION POND 2 TO BE CONSTRUCTED IN THE FUTURE IF REQUIRED.
11. ACTUAL SIZE, LOCATION, AND ORIENTATION OF STABILIZATION FACILITY AND ANCILLARY STRUCTURES AND EQUIPMENT TO BE DETERMINED DURING FINAL DESIGN.
12. TOTAL CAPACITY OF COLLECTION BASIN POND NEEDED: 6.0 AC-FT.
13. ELECTRICAL AND PIPING TO BE DESIGNED BY CONTRACTOR. SHOP DRAWINGS TO BE SUBMITTED FOR REVIEW AND APPROVED BY ENGINEER.
14. ALL GEOSYNTHETIC MATERIALS HAVE BEEN EXAGGERATED FOR CLARITY.
15. ALL CONCRETE SURFACES WHICH ARE EXPOSED TO POTENTIALLY HAZARDOUS MATERIALS AND ARE INTENDED AS CONTAINMENT FEATURES OR DIP PADS SHALL BE EPOXY COATED.
16. ALL PIPING WITHIN LINED FACILITIES WILL BE SINGLE WALL PIPE. DOUBLE WALL PIPE WILL BE USED FOR ALL PIPING OUTSIDE OF LINED FACILITIES.
17. LCRS - LEACHATE COLLECTION REMOVAL SYSTEM
18. LDRS - LEAKAGE DETECTION REMOVAL SYSTEM
19. USCS - UNIFIED SOIL CLASSIFICATION SYSTEM IS A SYSTEM WHICH CLASSIFIES SOIL TYPES ACCORDING TO SOIL TEXTURE AND GRAIN SIZE.
20. CONCRETE STRUCTURAL DETAILS ARE SHOWN ON DRAWING 45. THESE APPLY TO ANY CONCRETE SHOWN THROUGHOUT THE DRAWING SET.

PATRICK G. CORSER NEW MEXICO 12236 REGISTERED PROFESSIONAL ENGINEER

PROFESSIONAL ENGINEER'S STATEMENT

I, Patrick G. Corser, state that this map was prepared under my supervision and all the information presented hereon is true and correct to the best of my knowledge and information.

11/5/98 Date — Patrick G. Corser, NM Reg. No. 12236

Not For Construction

REV. No	REVISIONS	DATE	DESIGN BY	DRAWN BY	REVIEWED AND SIGNED BY
1	November 1998 Revision	10/29/98	J.Pellicer	T.Smith	P.Corser
0	PART B PERMIT APPLICATION	12/12/97	PGC/JPP	K.Conrath	P.Corser

TRIASSIC PARK WASTE DISPOSAL FACILITY

DRAWING TITLE: ***INDEX, LEGEND AND GENERAL NOTES***

TerraMatrix MONTGOMERY WATSON Mining Group

Sheet 1 Of 1 Sheets

SCALE: Not to Scale — DRAWING No. 2

PROJECT NUMBER: 602-0200

AutoCAD FILE: GANDY-

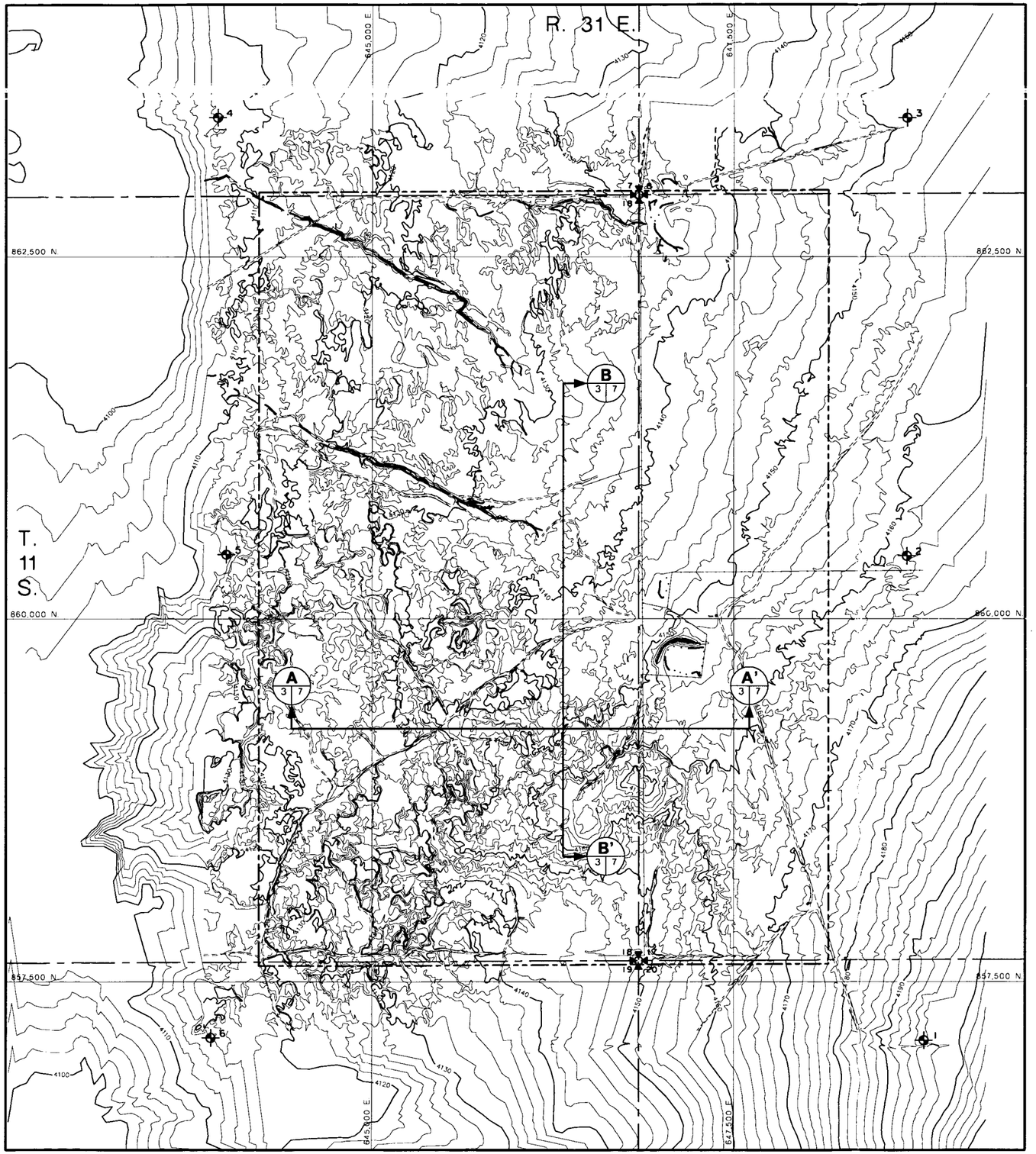

SURVEY CONTROL POINTS

CONTROL POINT NUMBER	NORTHING	EASTING	ELEVATION
1	857,099.19	648,823.16	4,197.55
2	860,435.24	648,704.91	4,161.92
3	863,453.55	648,706.31	4,152.96
4	863,454.95	643,940.29	4,105.99
5	860,445.06	644,000.06	4,113.51
6	857,114.96	643,893.71	4,116.20

NOTES:

1. FOR GENERAL NOTES AND LEGEND INFORMATION SEE DRAWING No. 2, "INDEX, LEGEND AND GENERAL NOTES".
2. TOPOGRAPHY FROM AERIAL SURVEY PERFORMED AUGUST 1997 BY KOOGLE AND FOULS ENGINEERING. ADDITIONAL TOPO TAKEN FROM MESCALERO POINT, NEW MEXICO 7.5 MINUTE SERIES, DATED 1973.
3. SURVEY CONTROL POINTS SET IN FIELD WITH REBAR AND CAP BY JOHN WEST ENGINEERING COMPANY, AUGUST 1997.

SCALE

400' 0 400' 800'

CONTOUR INTERVAL 2 FT.

Not For Construction

REV No.	REVISIONS	DATE	DESIGN BY	DRAWN BY	REVIEWED AND SIGNED BY
0	PART B PERMIT APPLICATION	12/12/97	PGC/JPP	T.Smith	P.Corser

PATRICK G. CORSER NEW MEXICO 12236 REGISTERED PROFESSIONAL ENGINEER

PROFESSIONAL ENGINEER'S STATEMENT

I, Patrick G. Corser, state that this map was prepared under my supervision and all the information presented hereon is true and correct to the best of my knowledge and information.

11/5/98 — Patrick G. Corser, NM P.E. 12236

Date

TRIASSIC PARK WASTE DISPOSAL FACILITY

DRAWING TITLE:

EXISTING TOPOGRAPHY

TerraMatrix
MONTGOMERY WATSON
Mining Group

Sheet 1 Of 1 Sheets

SCALE: AS NOTED

DRAWING No. 3

DWG ____ PROJECT NUMBER 602-0200

AutoCAD FILE GAND

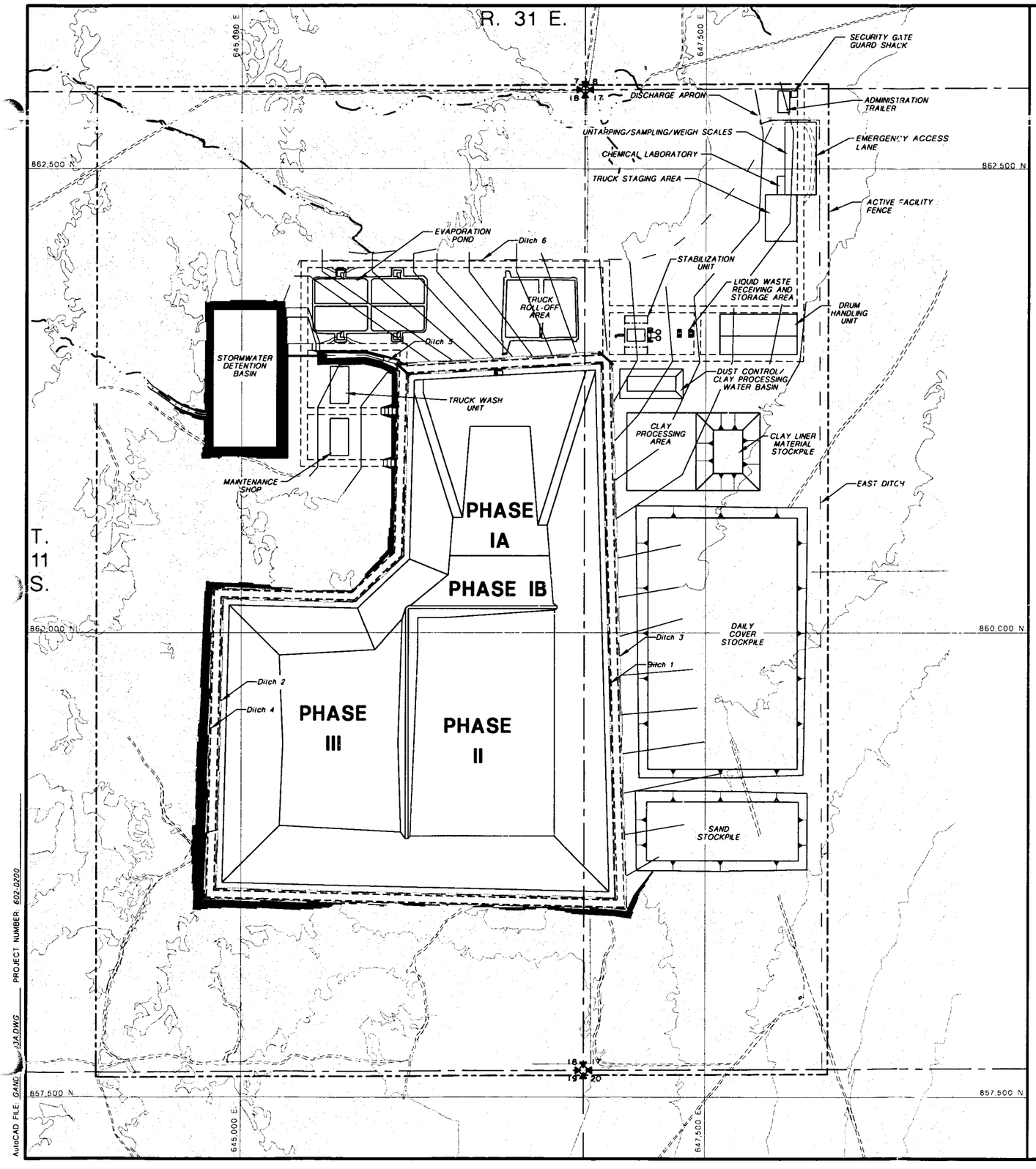

LEGEND

EXISTING CONTOUR
REGRADED CONTOUR

NOTES:
1. FOR GENERAL NOTES AND LEGEND INFORMATION SEE DRAWING No. 2, "INDEX, LEGEND AND GENERAL NOTES".
2. TOPOGRAPHY FROM AERIAL SURVEYS PERFORMED AUGUST 1997 BY KOOGLE AND POULS ENGINEERING.

N

SCALE
300' 0 300' 600'
CONTOUR INTERVAL 2 FT.

Not For Construction

REV No.	REVISIONS	DATE	DESIGN BY	DRAWN BY	REVIEWED AND SIGNED BY
1	November 1998 revision	10/29/98	J.Pellicer	T.Smith	P.Corser
0	PART B PERMIT APPLICATION	12/12/97	PGC/JPP	T.Smith	P.Corser

PATRICK G. CORSER NEW MEXICO 12236 REGISTERED PROFESSIONAL ENGINEER

PROFESSIONAL ENGINEER'S STATEMENT

I, Patrick G. Corser, state that this map was prepared under my supervision and all the information presented hereon is true and correct to the best of my knowledge and information.

11/5/98 — Patrick Corser
Date — Patrick G. Corser, NM P.E. 12236

TRIASSIC PARK WASTE DISPOSAL FACILITY

DRAWING TITLE:

FACILITY LAYOUT

TerraMatrix
MONTGOMERY WATSON
Mining Group

Sheet 1 Of 1 Sheets
SCALE: AS NOTED
DRAWING No. 4

AutoCAD FILE: GANDJA.DWG PROJECT NUMBER: 602-0200

LEGEND

REGRADE AREA - CUT - 229,200 cy

REGRADE AREA - FILL - 75,100 cy

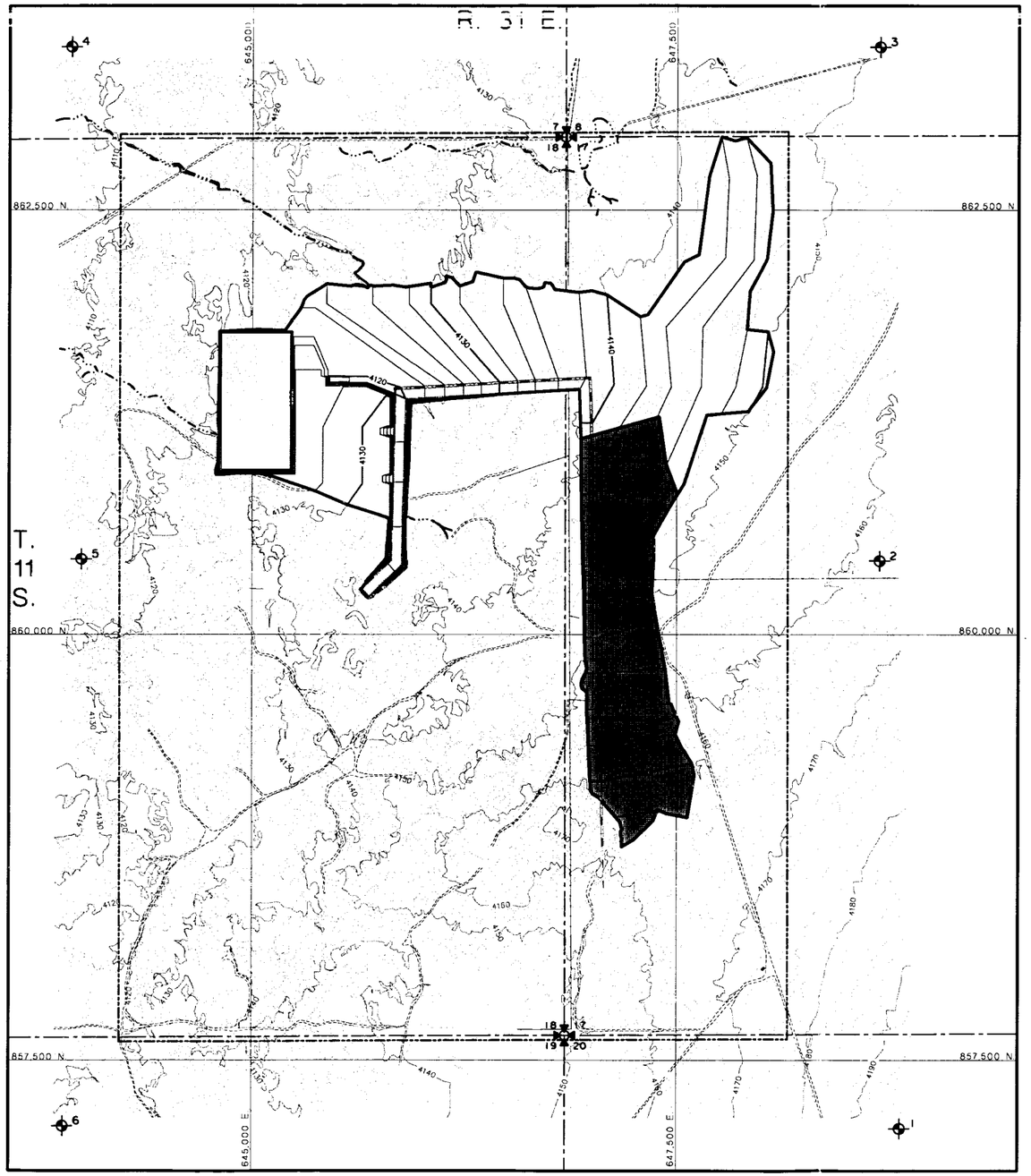

NOTES:

1. FOR GENERAL NOTES AND LEGEND INFORMATION SEE DRAWING No. 2, "INDEX, LEGEND AND GENERAL NOTES".
2. TOPOGRAPHY FROM AERIAL SURVEYS PERFORMED AUGUST 1997 BY KOOGLE AND POULS ENGINEERING.
3. SURVEY CONTROL POINTS SET IN FIELD WITH REBAR AND CAP BY BY JOHN WEST ENGINEERING COMPANY, AUGUST 1997.

N

SCALE

400' 0 400' 800'

CONTOUR INTERVAL 2 FT.

Not For Construction

REV No.	REVISIONS	DATE	DESIGN BY	DRAWN BY	REVIEWED AND SIGNED BY
0	PART B PERMIT APPLICATION	12/12/97	PGC/JPP	T.Smith	P.Corser

PATRICK G. CORSER NEW MEXICO 12236 REGISTERED PROFESSIONAL ENGINEER

PROFESSIONAL ENGINEER'S STATEMENT

I, Patrick G. Corser, state that this map was prepared under my supervision and all the information presented hereon is true and correct to the best of my knowledge and information.

1/5/98 *Patrick Corser*

Date *Patrick G. Corser, NM P.E. 12236*

TRIASSIC PARK WASTE DISPOSAL FACILITY

DRAWING TITLE:

INITIAL SITE GRADING PLAN

TerraMatrix
MONTGOMERY WATSON
Mining Group

Sheet 1 Of 1 Sheets

SCALE: AS NOTED

DRAWING No. 5

AutoCAD FILE: GAND_E.DWG PROJECT NUMBER: 602-0200

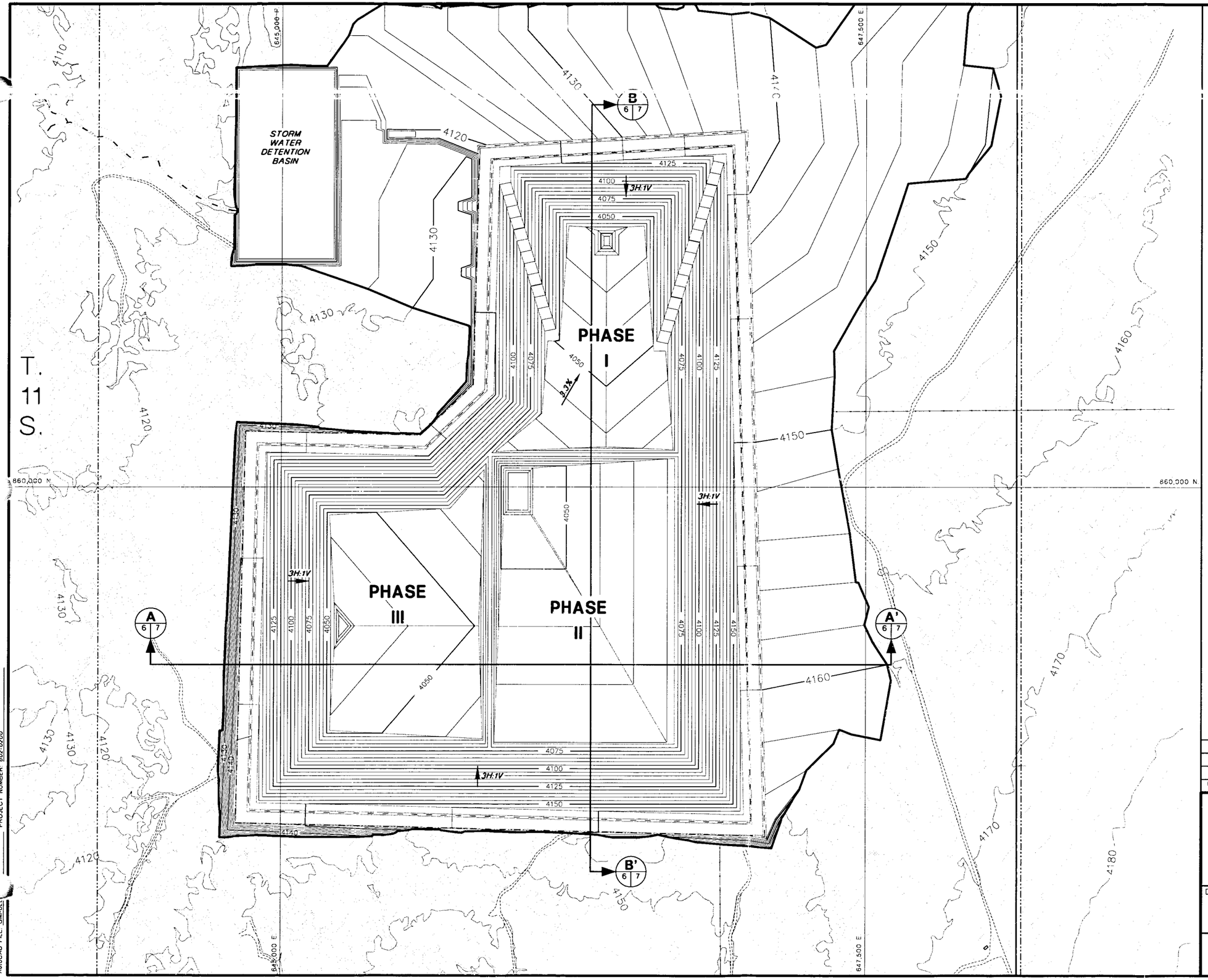

NOTES:

1. FOR GENERAL NOTES AND LEGEND INFORMATION SEE
2. TOPOGRAPHY FROM AERIAL SURVEYS PERFORMED AUGUST 1997 BY KOOGLE AND POULS ENGINEERING.
3. BASE GRADES FOR PHASES II AND III TO BE MODIFIED PRIOR TO CONSTRUCTION TO ACHIEVE A MINIMUM OF 2%.

PATRICK G. CORSER
NEW MEXICO
12236
REGISTERED PROFESSIONAL ENGINEER

PROFESSIONAL ENGINEER'S STATEMENT

I, Patrick G. Corser, state that this map was prepared under my supervision and all the information presented herein is true and correct to the best of my knowledge and information.

11/5/98 — Patrick G. Corser
Date — Patrick G. Corser, NM P.E. 12236

SCALE

200' 0 200' 400'

CONTOUR INTERVAL 5 FT.
SURFACE TOPOGRAPHY CONTOUR INTERVAL 2 FT

Not For Construction

REV. No.	REVISIONS	DATE	DESIGN BY	DRAWN BY	REVIEWED AND SIGNED BY
1	November 1998 Revision	10/29/98	J.Pellicer	T.Smith	P.Corser
0	PART B PERMIT APPLICATION	12/12/97	PGC/JPP	EWS	P.Corser

TRIASSIC PARK WASTE DISPOSAL FACILITY

DRAWING TITLE:

ULTIMATE LANDFILL EXCAVATION PLAN

TerraMatrix
MONTGOMERY WATSON
Mining Group

Sheet 1 Of 1 Sheets

SCALE: AS NOTED

DRAWING No. 6

PROJECT NUMBER: 602-0200

AutoCAD FILE: GMI-UL

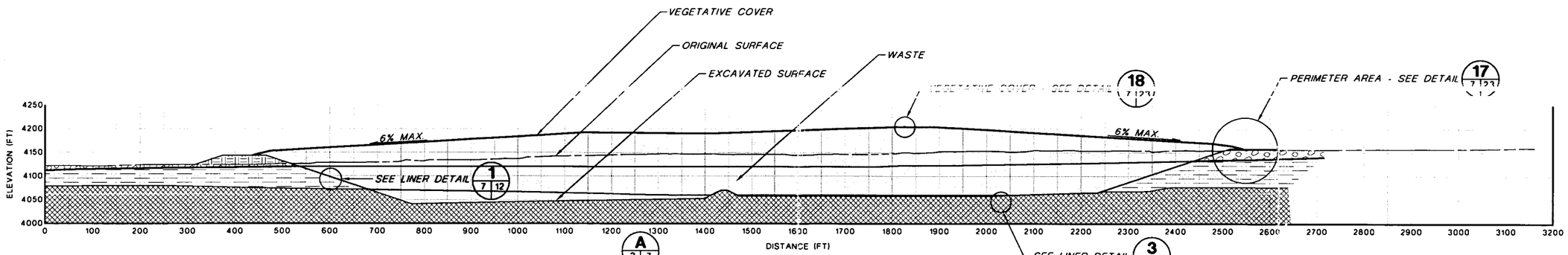

A 3 7
A 6 7
A 21 7
A 22 7

CROSS-SECTION A-A'

HORIZONTAL SCALE
0 120' 240'

VERTICAL SCALE
0 120' 240'

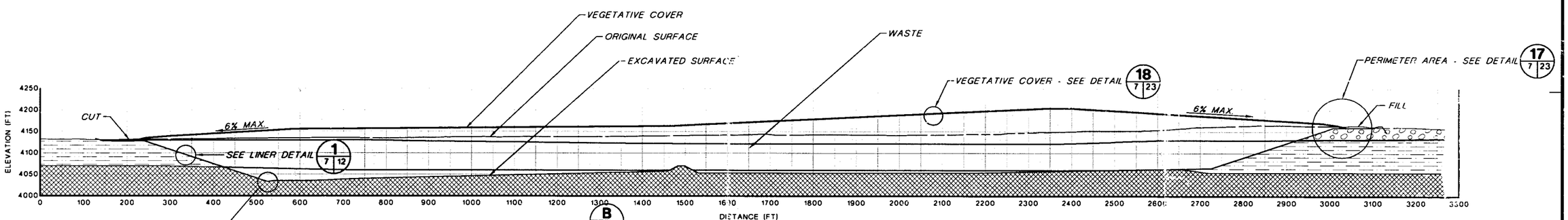

B 3 7
B 6 7
B 21 7
B 22 7

CROSS-SECTION B-B'

HORIZONTAL SCALE
0 120' 240'

VERTICAL SCALE
0 120' 240'

NOTES:
1. CROSS-SECTIONS NOT CUT PERPENDICULAR TO COVER CONTOURS; THEREFORE TRUE COVER SLOPES NOT SHOWN.
2. EXTENT OF GEOLOGIC UNITS IS INFERRED BASED ON SUBSURFACE EXPLORATION PROGRAM.
3. SYMBOLS FOR GEOLOGIC UNITS ARE SHOWN ON DRAWING 2.
4. FOR GENERAL NOTES AND LEGEND INFORMATION SEE DRAWING No. 2, "INDEX, LEGEND AND GENERAL NOTES".

PATRICK G. CORSER NEW MEXICO 12236 REGISTERED PROFESSIONAL ENGINEER

PROFESSIONAL ENGINEER'S STATEMENT

I, Patrick G. Corser, state that this map was prepared under my supervision and all the information presented hereon is true and correct to the best of my knowledge and information.

11/5/98 Patrick G. Corser
Date Patrick G. Corser, NM P.E. 12236

Not For Construction

REV No	REVISIONS	DATE	DESIGN BY	DRAWN BY	REVIEWED AND SIGNED BY
1	NOVEMBER 1998 REVISION	10/29/98	J.Pellicer	T.Smith	P.Corser
0	PART B PERMIT APPLICATION	12/12/97	PGC/JPP	T.Smith	P.Corser

TRIASSIC PARK
WASTE DISPOSAL FACILITY

DRAWING TITLE:

LANDFILL CROSS-SECTIONS

TerraMatrix
MONTGOMERY WATSON
Mining Group

Sheet 1 Of 1 Sheets
SCALE: AS NOTED
DRAWING No. 7

AutoCAD FILE GANDY DWG PROJECT NUMBER 622-0200

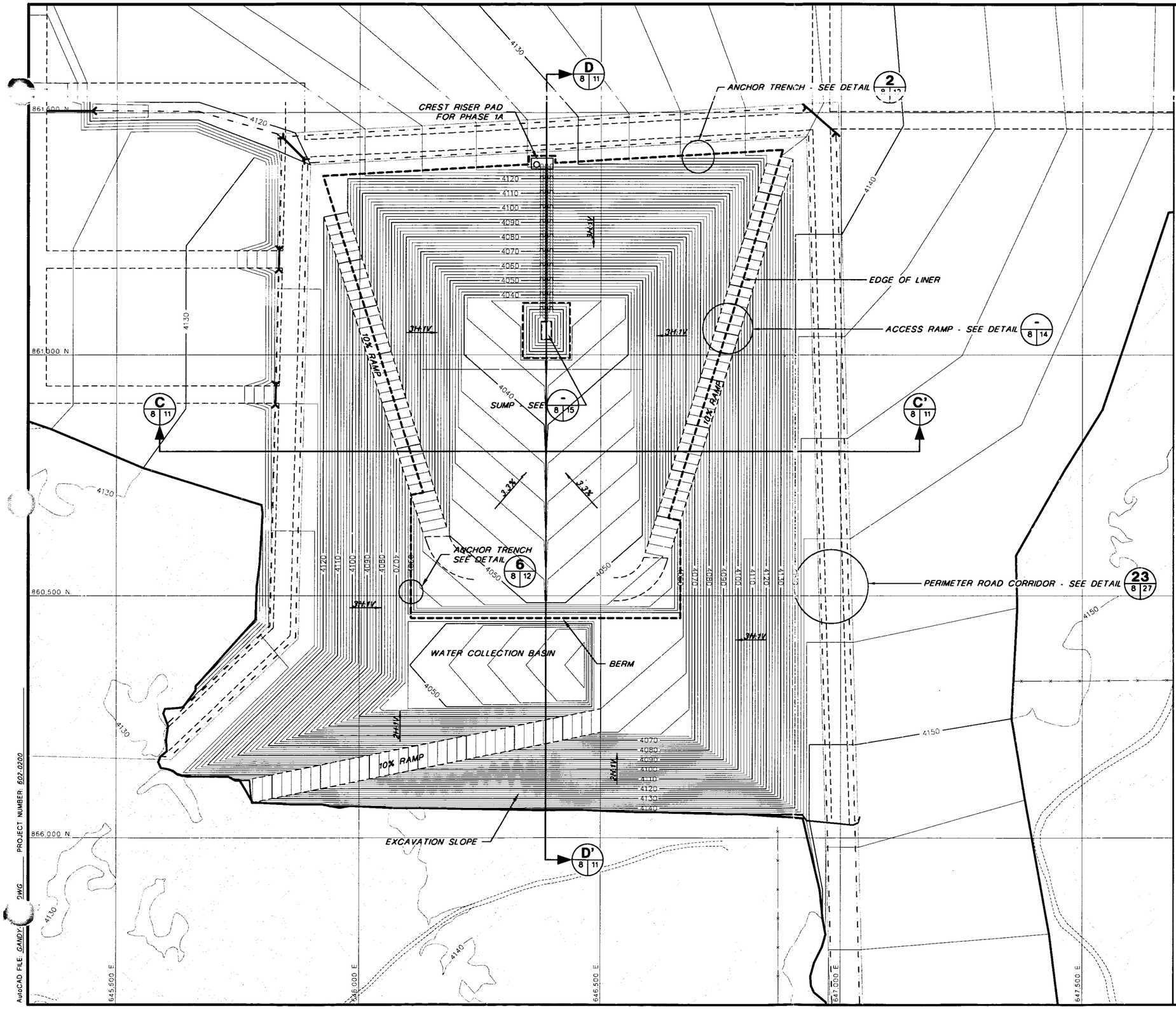

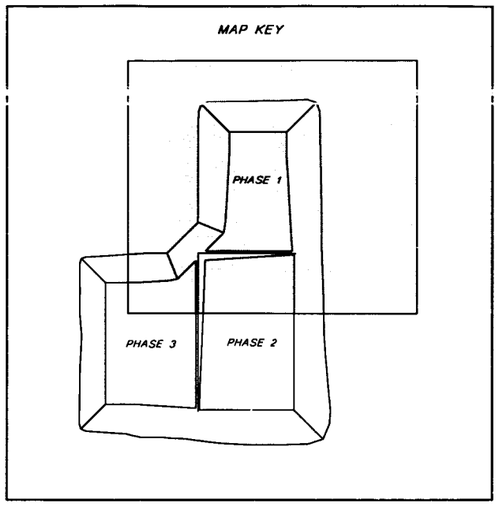

NOTES:
1. FOR GENERAL NOTES AND LEGEND INFORMATION SEE DRAWING No. 2, "INDEX, LEGEND AND GENERAL NOTES".
2. TOPOGRAPHY FROM AERIAL SURVEYS PERFORMED AUGUST 1997 BY KOOGLE AND POULS ENGINEERING.

PATRICK G. CORSER NEW MEXICO 12236 REGISTERED PROFESSIONAL ENGINEER

PROFESSIONAL ENGINEER'S STATEMENT

I, Patrick G. Corser, state that this map was prepared under my supervision and all the information presented hereon is true and correct to the best of my knowledge and information.

11/5/98 Date — Patrick G. Corser, NM P.E. 12236

SCALE

100' 0 100' 200'

CONTOUR INTERVAL 2 FT.

Not For Construction

REV No.	REVISIONS	DATE	DESIGN BY	DRAWN BY	REVIEWED AND SIGNED BY
1	NOVEMBER 1998 REVISION	10/29/98	J.Pelicer	T.Smith	P.Corser
0	PART B PERMIT APPLICATION	12/12/97	PGC/JPP	T.Smith	P.Corser

TRIASSIC PARK
WASTE DISPOSAL FACILITY

DRAWING TITLE:
DETAILED EXCAVATION PLAN - PHASE 1A

TerraMatrix
MONTGOMERY WATSON
Mining Group

Sheet 1 Of 1 Sheets
SCALE: AS NOTED
DRAWING No. 8

AutoCAD FILE: GANDY2.DWG PROJECT NUMBER: 602-0200

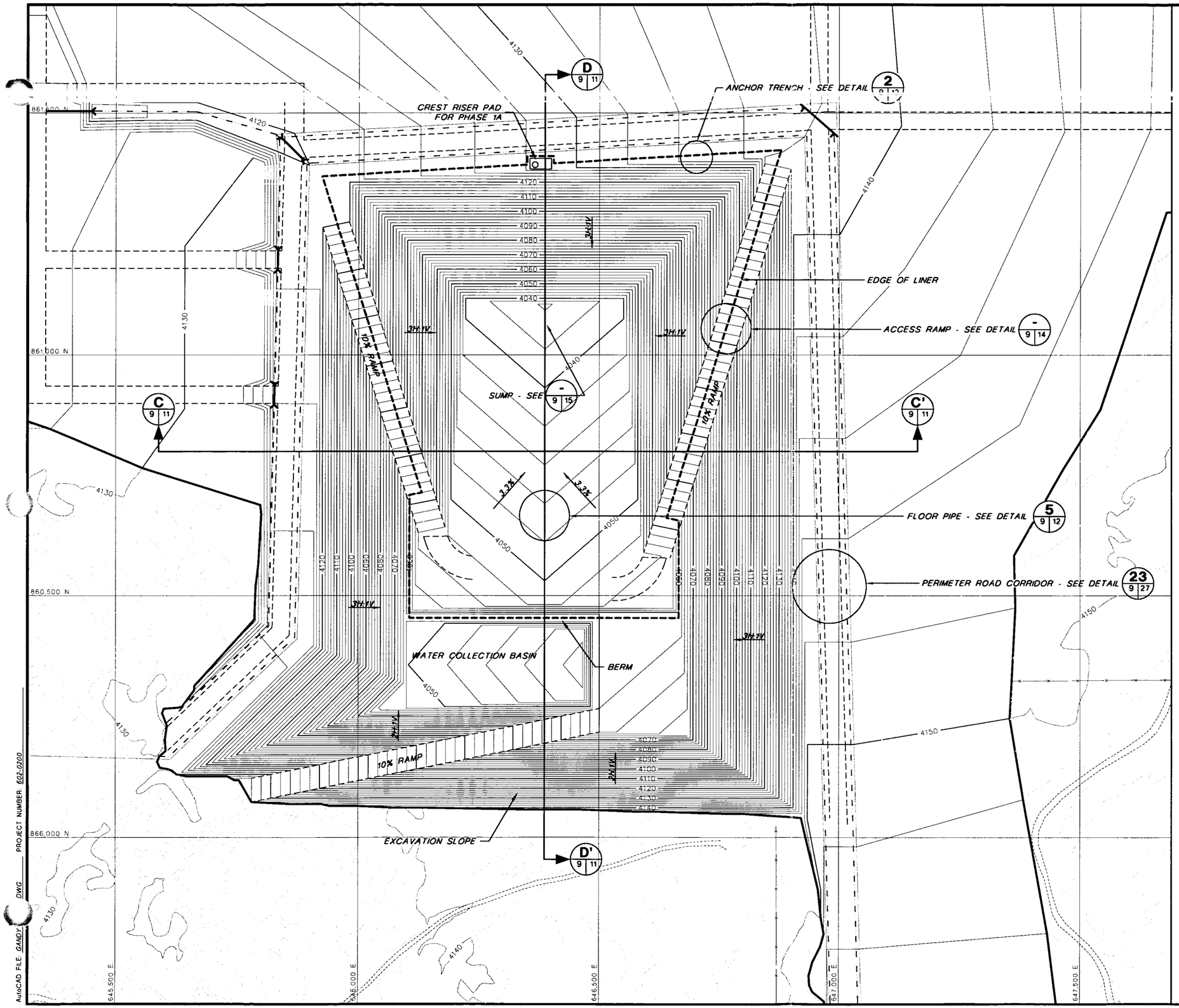

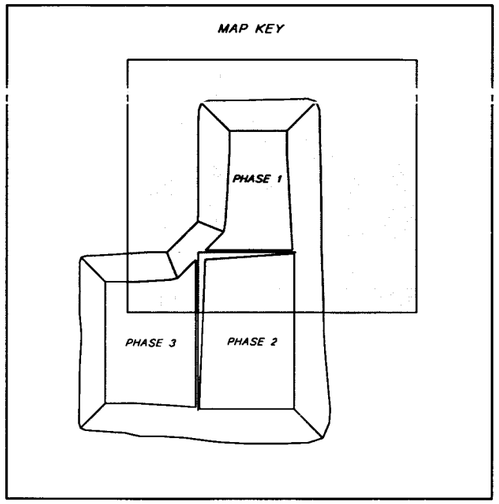

NOTES:
1. FOR GENERAL NOTES AND LEGEND INFORMATION SEE DRAWING No. 2, "INDEX, LEGEND AND GENERAL NOTES".
2. TOPOGRAPHY FROM AERIAL SURVEYS PERFORMED AUGUST 1997 BY KOOGLE AND POULS ENGINEERING.

PATRICK G. CORSER NEW MEXICO 12236 REGISTERED PROFESSIONAL ENGINEER

PROFESSIONAL ENGINEER'S STATEMENT

I, Patrick G. Corser, state that this map was prepared under my supervision and all the information presented hereon is true and correct to the best of my knowledge and information.

11/5/98 — Patrick G. Corser, NM P.E. 12236
Date

SCALE

100' 0 100' 200'

CONTOUR INTERVAL 2 FT.

Not For Construction

REV No.	REVISIONS	DATE	DESIGN BY	DRAWN BY	REVIEWED AND SIGNED BY
1	NOVEMBER 1998 REVISION	10/29/98	J.Pellicer	T.Smith	P.Corser
0	PART B PERMIT APPLICATION	12/12/97	PGC/JJP	T.Smith	P.Corser

TRIASSIC PARK
WASTE DISPOSAL FACILITY

DRAWING TITLE:
TOP OF PROTECTIVE SOIL LAYER - PHASE 1A

TerraMatrix
MONTGOMERY WATSON
Mining Group

Sheet 1 Of 1 Sheets
SCALE: AS NOTED
DRAWING No. 9

AutoCAD FILE: GANDY DWG PROJECT NUMBER: 602-0200

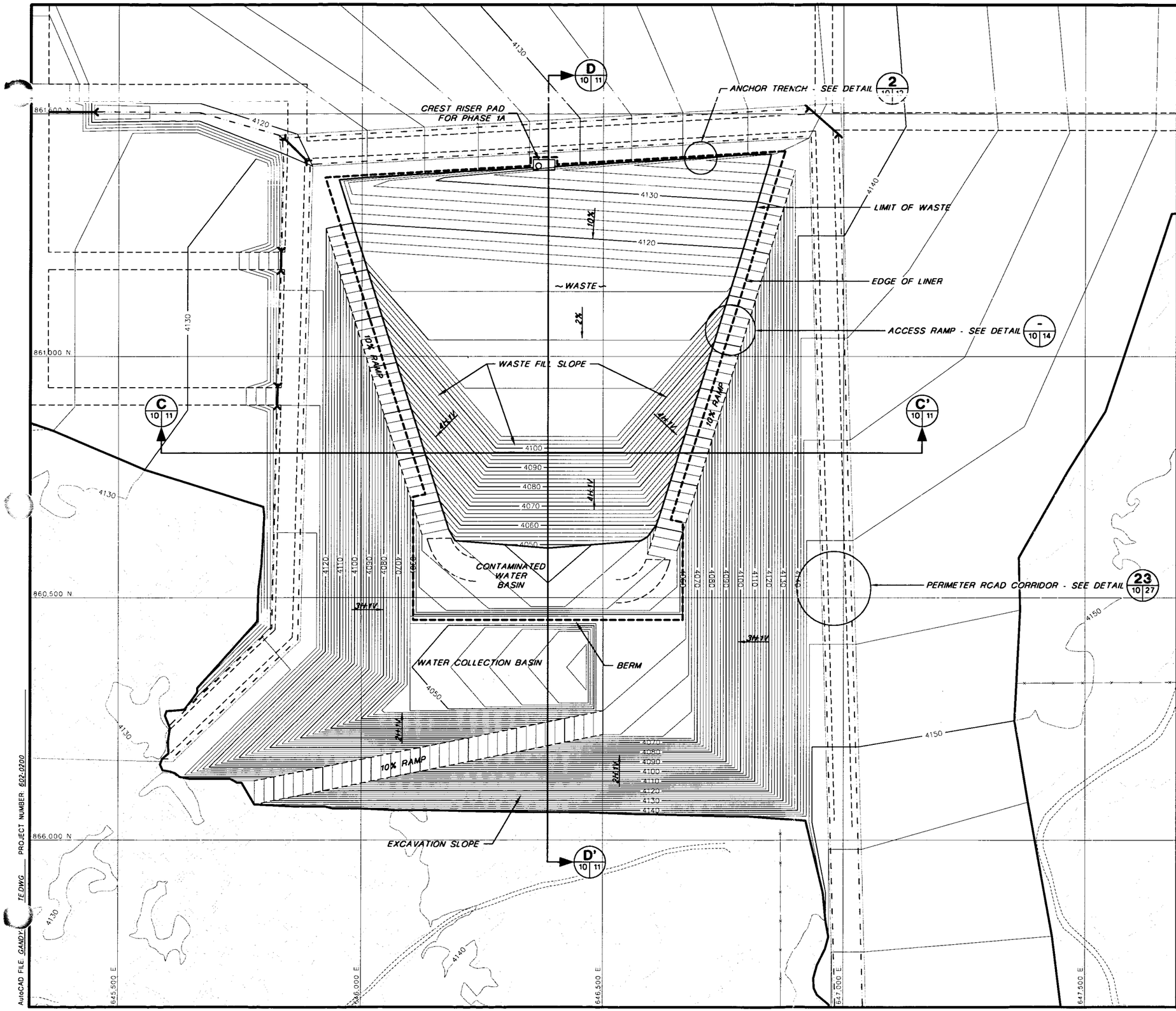

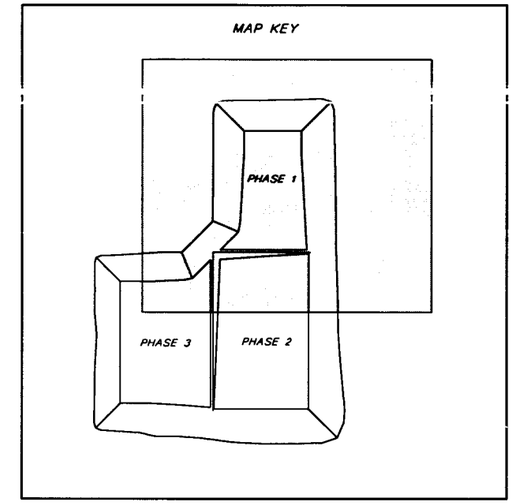

NOTES:
1. FOR GENERAL NOTES AND LEGEND INFORMATION SEE DRAWING No. 2, "INDEX, LEGEND AND GENERAL NOTES".
2. TOPOGRAPHY FROM AERIAL SURVEYS PERFORMED AUGUST 1997 BY KOOGLE AND POULS ENGINEERING.
3. WASTE FILL VOLUME FOR PHASE 1A: 553,200 CY

PATRICK G. CORSER NEW MEXICO 12236 REGISTERED PROFESSIONAL ENGINEER

PROFESSIONAL ENGINEER'S STATEMENT

I, Patrick G. Corser, state that this map was prepared under my supervision and all the information presented hereon is true and correct to the best of my knowledge and information.

11/5/98 Patrick G. Corser
Date Patrick G. Corser, NM P.E. 12236

SCALE
100' 0 100' 200'
CONTOUR INTERVAL 2 FT.

Not For Construction

REV No	REVISIONS	DATE	DESIGN BY	DRAWN BY	REVIEWED AND SIGNED BY
1	NOVEMBER 1998 REVISION	10/29/98	J.Pellicer	T.Smith	P.Corser
0	PART B PERMIT APPLICATION	12/12/97	PGC/JPP	T.Smith	P.Corser

TRIASSIC PARK
WASTE DISPOSAL FACILITY

DRAWING TITLE:
FILLING PLAN - PHASE 1A

TerraMatrix
MONTGOMERY WATSON
Mining Group

Sheet 1 Of 1 Sheets
SCALE: AS NOTED
DRAWING No. 10

AutoCAD FILE GANDY_TE.DWG PROJECT NUMBER 602-0200

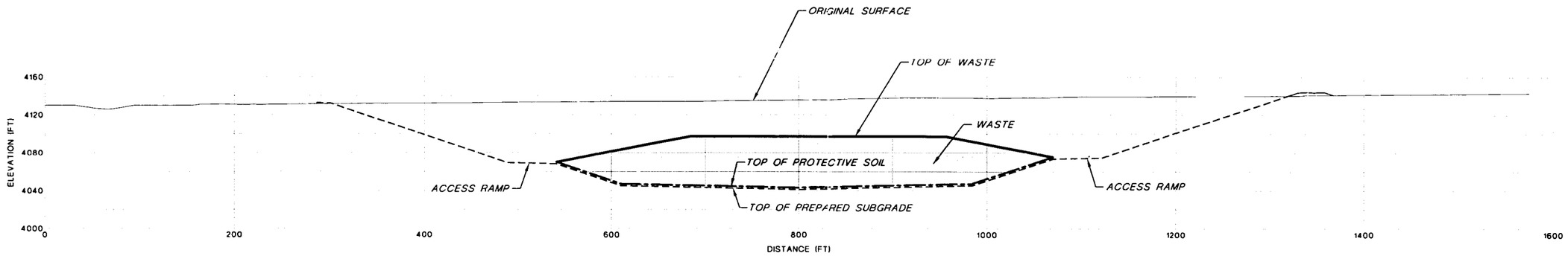

C 8 11 C 9 11 C 10 11

PHASE 1A CROSS-SECTION C-C'

HORIZONTAL SCALE
0 60' 120'

VERTICAL SCALE
0 60' 120'

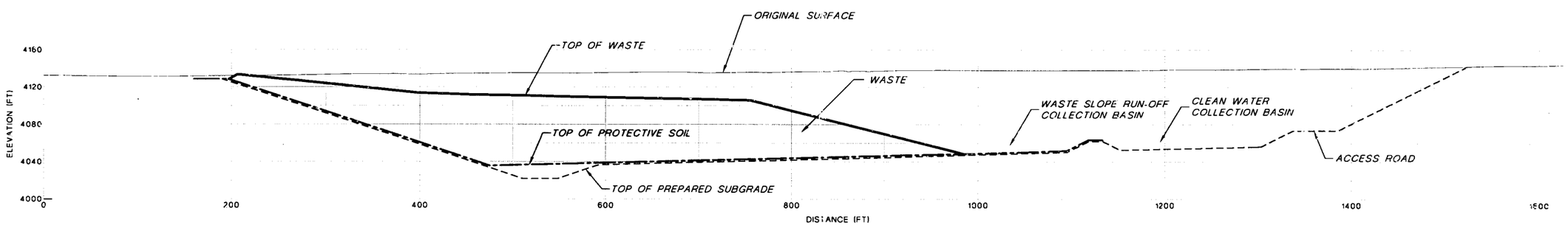

D 8 11 D 9 11 D 10 11

PHASE 1A CROSS-SECTION D-D'

HORIZONTAL SCALE
0 60' 120'

VERTICAL SCALE
0 60' 120'

NOTE:
FOR GENERAL NOTES AND LEGEND INFORMATION SEE DRAWING No. 2, "INDEX, LEGEND AND GENERAL NOTES".

PATRICK G. CORSER NEW MEXICO 12236 REGISTERED PROFESSIONAL ENGINEER

PROFESSIONAL ENGINEER'S STATEMENT

I, Patrick G. Corser, state that this map was prepared under my supervision and all the information presented hereon is true and correct to the best of my knowledge and information.

11/5/98 — Date

Patrick G. Corser, NM P.E. 12236

Not For Construction

REV. No.	REVISIONS	DATE	DESIGN BY	DRAWN BY	REVIEWED AND SIGNED BY
1	NOVEMBER 1998 REVISION	10/28/98	J.Pellicer	T.Smith	P.Corser
0	PART B PERMIT APPLICATION	12/12/97	PGC/JPP	T.Smith	P.Corser

TRIASSIC PARK
WASTE DISPOSAL FACILITY

DRAWING TITLE:

PHASE 1A CROSS-SECTIONS

TerraMatrix
MONTGOMERY WATSON
Mining Group

Sheet 1 Of 1 Sheets
SCALE: AS NOTED
DRAWING No. 11

AutoCAD FILE: GANDY\XSEC.DWG PROJECT NUMBER: 602-0200

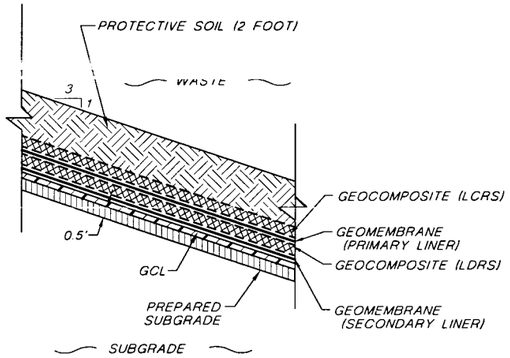

SLOPE
1 (7|12) LINER SYSTEM DETAIL
Not To Scale

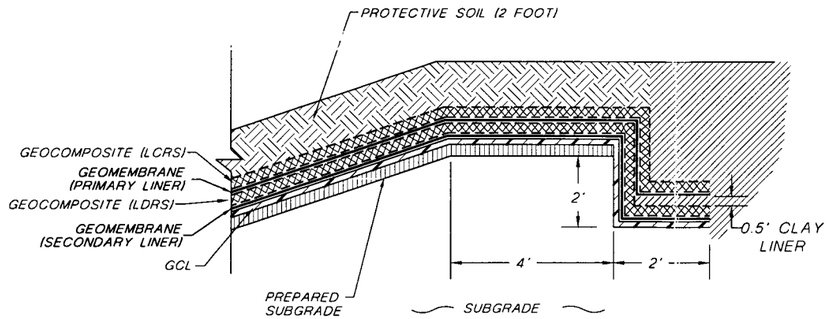

2 (8|12) 2 (9|12) 2 (10|12) 2 (23|12) 2 (24|12) LINER ANCHOR TRENCH DETAIL
Not To Scale

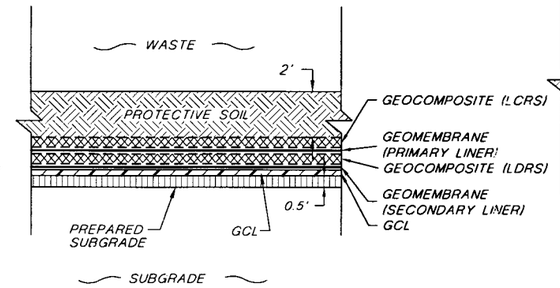

FLOOR
3 (7|12) 3 (24|12) LINER SYSTEM DETAIL
Not To Scale

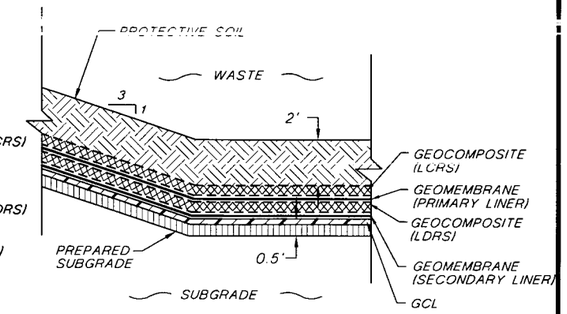

TOE OF SLOPE
4 (7|12) LINER SYSTEM DETAIL
Not To Scale

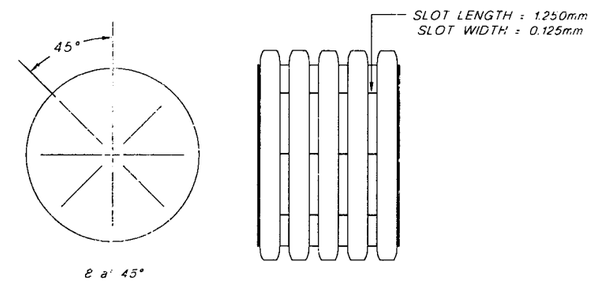

7 (12|12) ADS N-12 PIPE SLOT DETAIL
Not To Scale

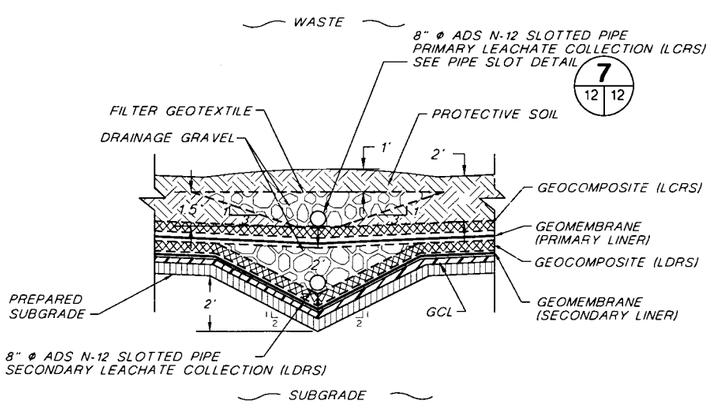

5 (9|12) FLOOR PIPE DETAIL
Not To Scale

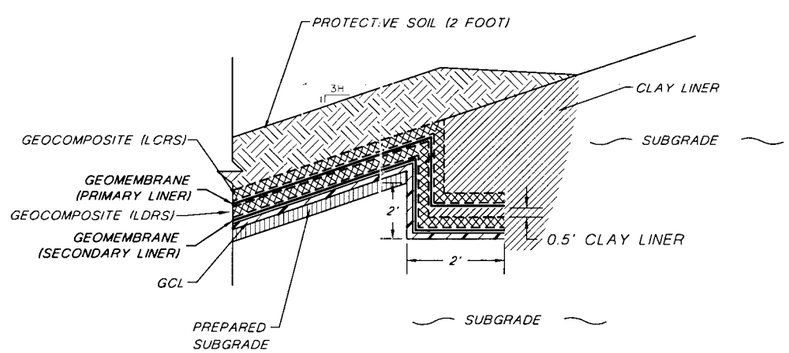

6 (8|12) 6 (13|12) SLOPE ANCHOR TRENCH
Not To Scale

NOTE:
FOR GENERAL NOTES AND LEGEND INFORMATION SEE DRAWING No. 2. "INDEX, LEGEND AND GENERAL NOTES".

PATRICK G. CORSER NEW MEXICO 12236 REGISTERED PROFESSIONAL ENGINEER

PROFESSIONAL ENGINEER'S STATEMENT
I, Patrick G. Corser, state that this map was prepared under my supervision and all the information presented herein is true and correct to the best of my knowledge and information.
11/5/98 — Patrick G. Corser
Date — Patrick G. Corser, NM P.E. 12236

Not For Construction

REV No	REVISIONS	DATE	DESIGN BY	DRAWN BY	REVIEWED AND SIGNED BY
1	NOVEMBER 1998 REVISION	10/29/98	J.Pellicer	T.Smith	P.Corser
0	PART B PERMIT APPLICATION	12/12/97	PGC/JPP	K.Conrath	P.Corser

TRIASSIC PARK
WASTE DISPOSAL FACILITY

DRAWING TITLE:
LINER DETAILS

TerraMatrix
MONTGOMERY WATSON
Mining Group

Sheet 1 Of 1 Sheets
SCALE: As Shown
DRAWING No. 12

PROJECT NUMBER 602.0200
AutoCAD FILE: LNRDTL

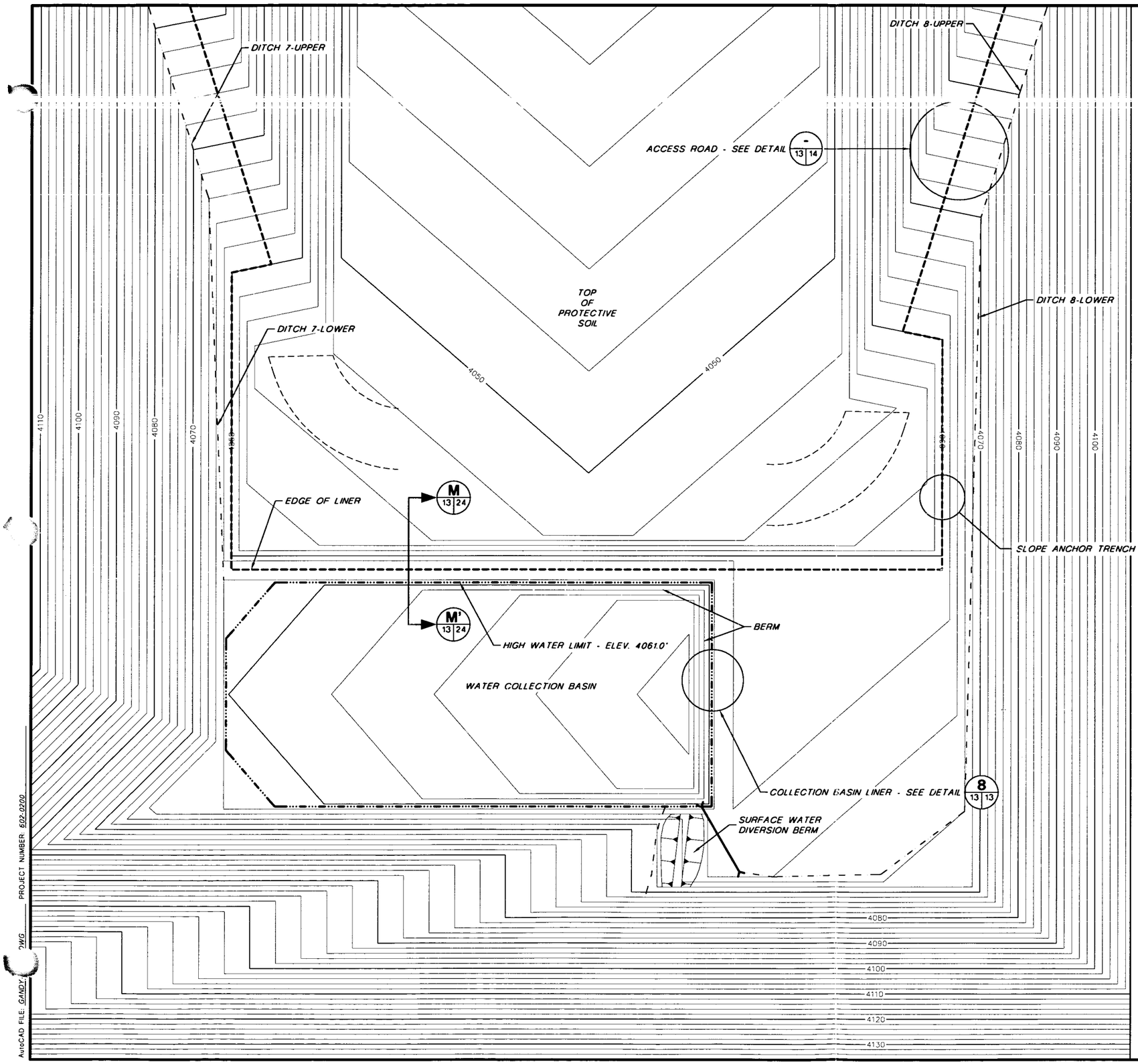

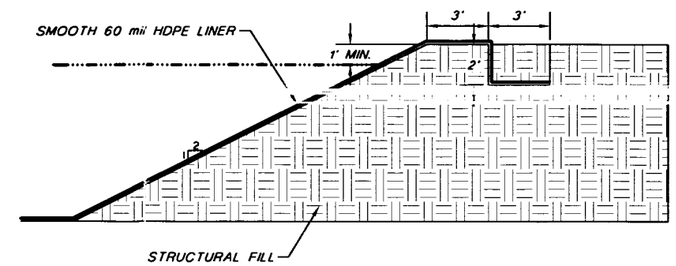

8 13 13 COLLECTION BASIN BERM DETAIL

NOT TO SCALE

NOTE:
FOR GENERAL NOTES AND LEGEND INFORMATION SEE DRAWING No. 2, "INDEX, LEGEND AND GENERAL NOTES".

PATRICK G. CORSER NEW MEXICO 12236 REGISTERED PROFESSIONAL ENGINEER

PROFESSIONAL ENGINEER'S STATEMENT

I, Patrick G. Corser, state that this map was prepared under my supervision and all the information presented hereon is true and correct to the best of my knowledge and information.

11/5/98 — Patrick G. Corser, NM P.E. 12236
Date

Not For Construction

REV. No.	REVISIONS	DATE	DESIGN BY	DRAWN BY	REVIEWED AND SIGNED BY
1	NOVEMBER 1998 REVISION	10/29/98	J.Pellicer	T.Smith	P.Corser
0	PART B PERMIT APPLICATION	12/12/97	PGC/JPP	T.Smith	P.Corser

N

SCALE
40' 0 40' 80'
CONTOUR INTERVAL 2 FT.

TRIASSIC PARK
WASTE DISPOSAL FACILITY

DRAWING TITLE:
COLLECTION BASIN PLAN AND DETAILS

TerraMatrix
MONTGOMERY WATSON
Mining Group

Sheet 1 Of 1 Sheets
SCALE: AS NOTED
DRAWING No. 13

AutoCAD FILE: GANDY.DWG PROJECT NUMBER: 602-0200

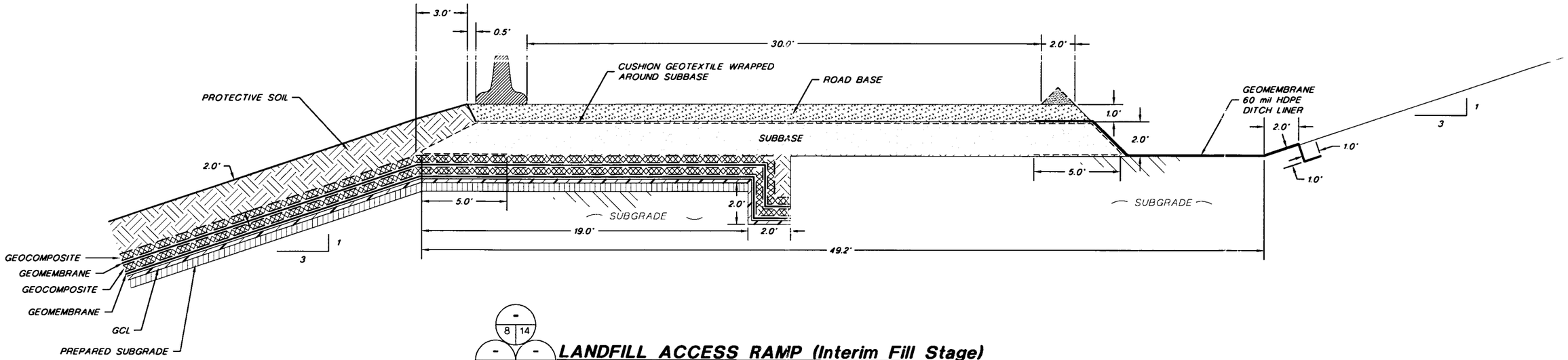

8 | 14
9 | 14 10 | 14
13 | 14

LANDFILL ACCESS RAMP (Interim Fill Stage)

SCALE
0 3 6
Feet

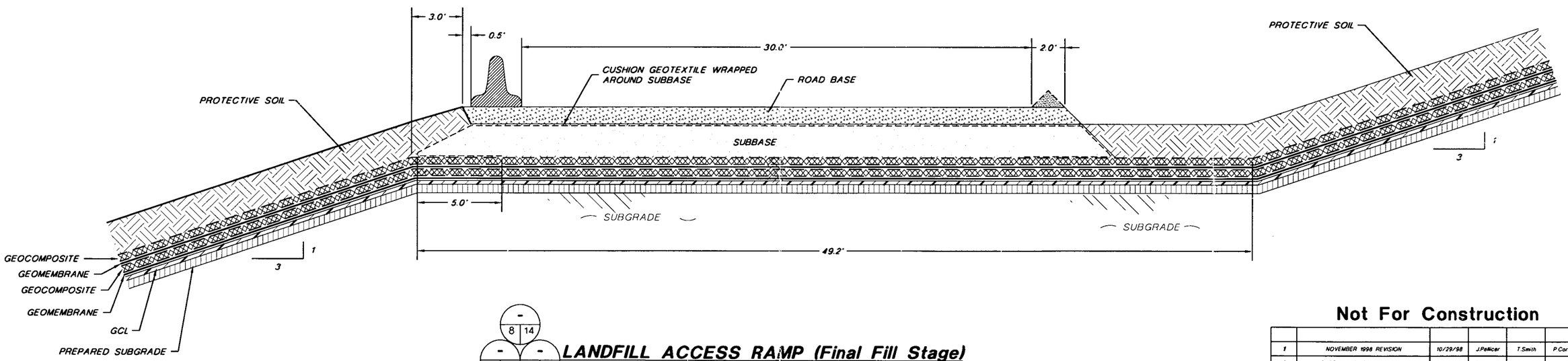

8 | 14
9 | 14 10 | 14
13 | 14

LANDFILL ACCESS RAMP (Final Fill Stage)

SCALE
0 3 6
Feet

NOTE:
FOR GENERAL NOTES AND LEGEND INFORMATION SEE DRAWING No. 2, "INDEX, LEGEND AND GENERAL NOTES".

PATRICK G. CORSER NEW MEXICO 12236 REGISTERED PROFESSIONAL ENGINEER

PROFESSIONAL ENGINEER'S STATEMENT

I, Patrick G. Corser, state that this map was prepared under my supervision and all the information presented hereon is true and correct to the best of my knowledge and information.

11/5/98 — Date — Patrick G. Corser, NM P.E. 12236

Not For Construction

REV No	REVISIONS	DATE	DESIGN BY	DRAWN BY	REVIEWED AND SIGNED BY
1	NOVEMBER 1998 REVISION	10/29/98	J.Pellicer	T.Smith	P.Corser
0	PART B PERMIT APPLICATION	12/12/97	PGC/JPP	E.Simonsen	P.Corser

TRIASSIC PARK
WASTE DISPOSAL FACILITY

DRAWING TITLE:
TYPICAL LANDFILL ACCESS RAMP DETAILS

TerraMatrix
MONTGOMERY WATSON
Mining Group

Sheet 1 Of 1 Sheets
SCALE: AS NOTED
DRAWING No. 14

AutoCAD FILE: RAMP.DWG PROJECT NUMBER: 602-0200

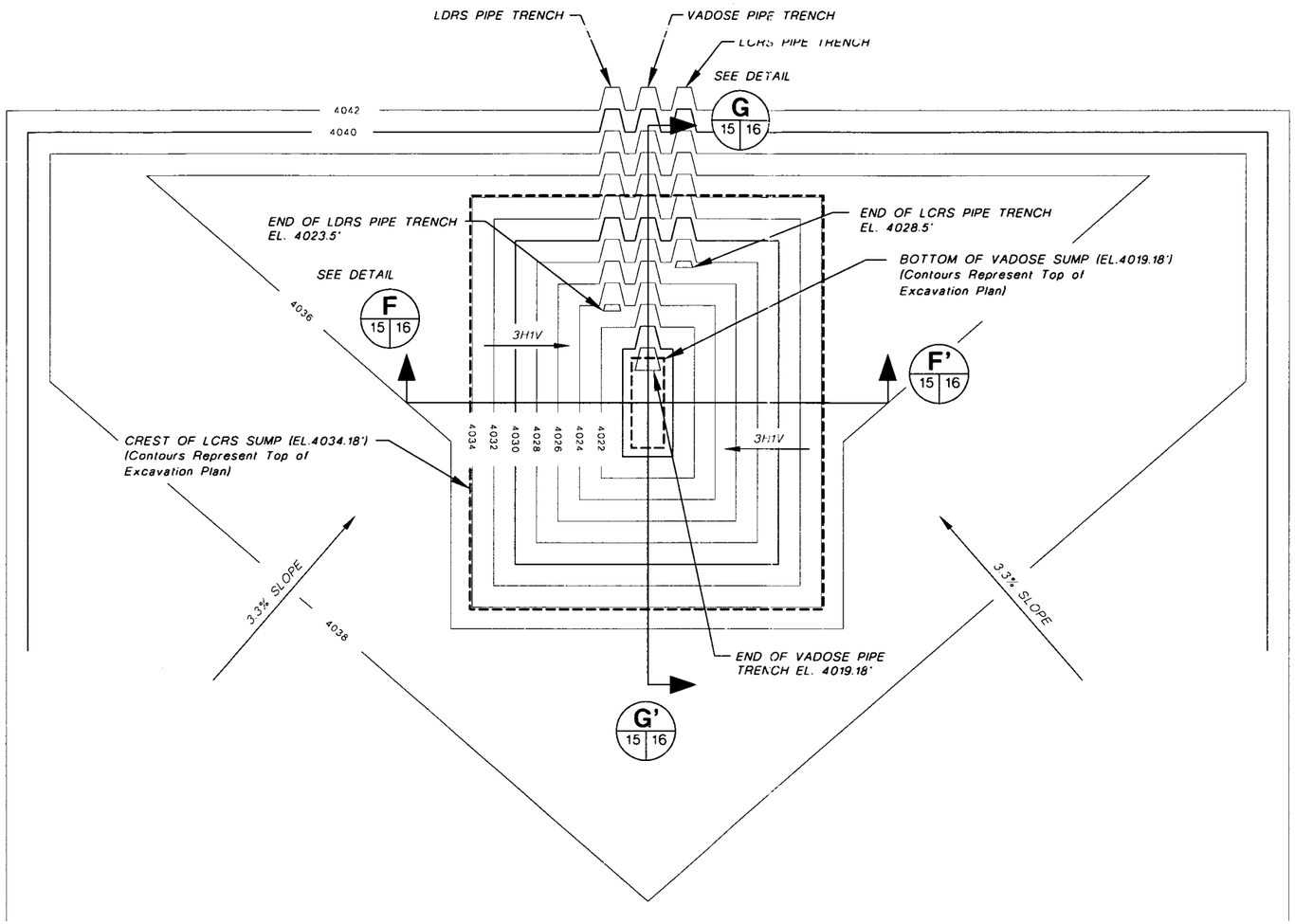

SUMP PHASE 1A - PLAN VIEW

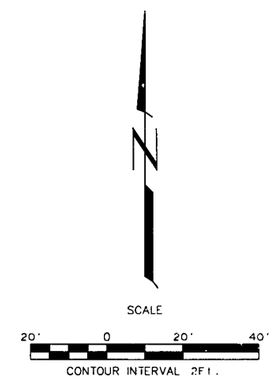

Not For Construction

REV. No.	REVISIONS	DATE	DESIGN BY	DRAWN BY	REVIEWED AND SIGNED BY
0	PART B PERMIT APPLICATION	12/12/97	PGC/JPP	T.Smith	P.Corser

PATRICK G. CORSER
NEW MEXICO
12236
REGISTERED PROFESSIONAL ENGINEER

PROFESSIONAL ENGINEER'S STATEMENT

I, Patrick G. Corser, state that this map was prepared under my supervision and all the information presented hereon is true and correct to the best of my knowledge and information.

11/5/98 — Patrick G. Corser
Date — Patrick G. Corser, NM P.E. 12236

TRIASSIC PARK
WASTE DISPOSAL FACILITY

DRAWING TITLE:

SUMP PLAN VIEW - PHASE 1A

TerraMatrix
MONTGOMERY WATSON
Mining Group

Sheet 1 Of 1 Sheets
SCALE: See Scale Bar
DRAWING No. 15

NOTE:
FOR GENERAL NOTES AND LEGEND INFORMATION SEE DRAWING No. 2, "INDEX, LEGEND AND GENERAL NOTES".

PROJECT NUMBER: 602-0200
AutoCAD FILE: SUMP2L

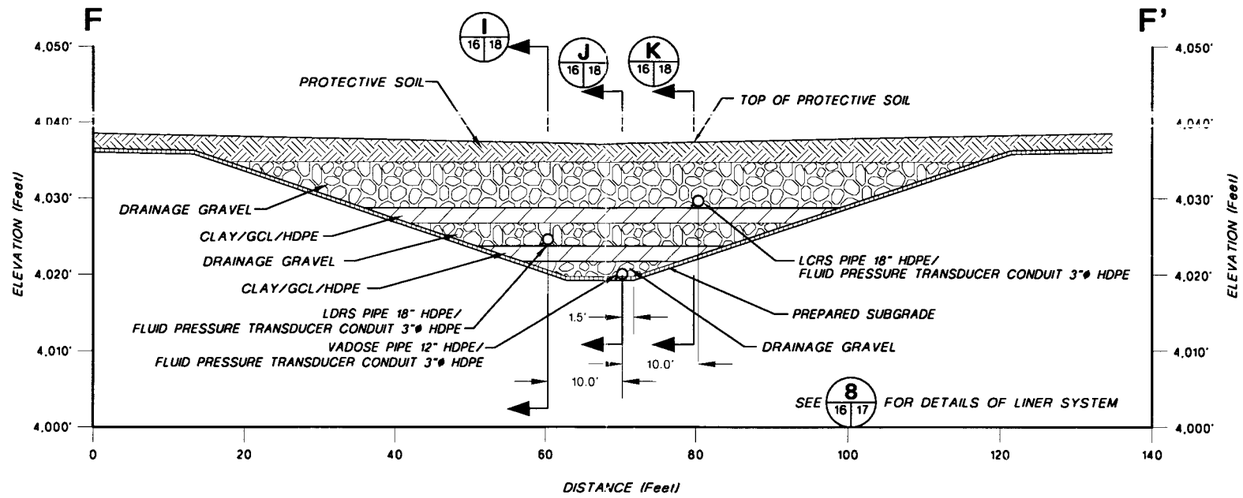

F 15 16 SUMP - CROSS-SECTION F-F'

HORIZONTAL SCALE
0 10.0' 20.0'

VERTICAL SCALE
0 10.0' 20.0'

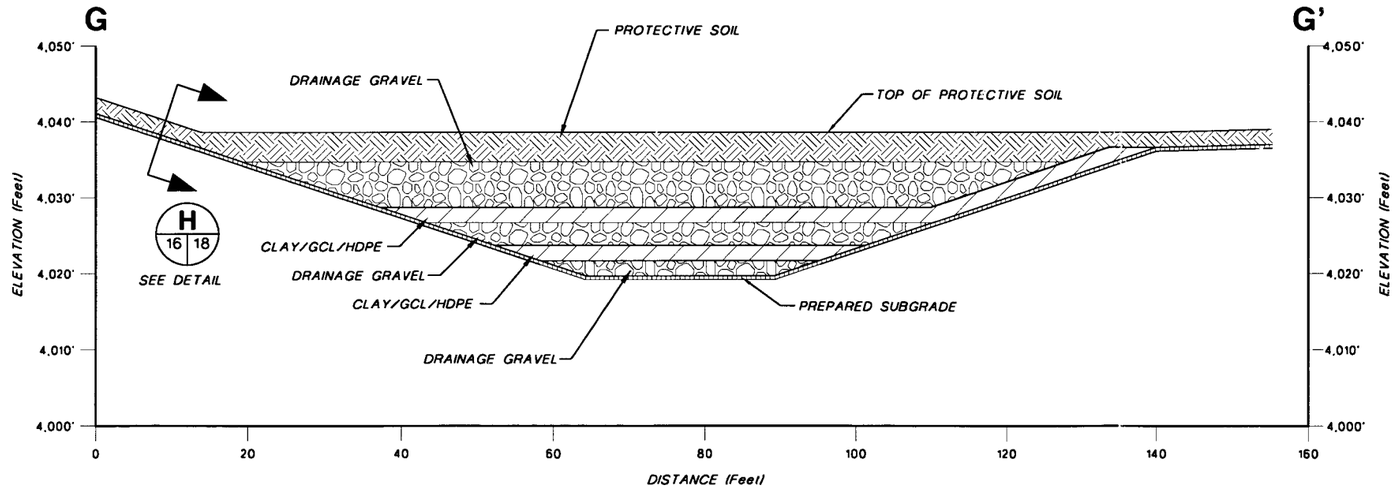

G 15 16 SUMP - CROSS-SECTION G-G'

HORIZONTAL SCALE
0 10.0' 20.0'

VERTICAL SCALE
0 10.0' 20.0'

NOTE:
FOR GENERAL NOTES AND LEGEND INFORMATION SEE DRAWING No. 2, "INDEX, LEGEND AND GENERAL NOTES".

PATRICK G. CORSER NEW MEXICO 12236 REGISTERED PROFESSIONAL ENGINEER

PROFESSIONAL ENGINEER'S STATEMENT

I, Patrick G. Corser, state that this map was prepared under my supervision and all the information presented hereon is true and correct to the best of my knowledge and information.

11/5/98 — Date

Patrick G. Corser, NM P.E. 12236

Not For Construction

REV. No.	REVISIONS	DATE	DESIGN BY	DRAWN BY	REVIEWED AND SIGNED BY
1	NOVEMBER 1998 REPORT	10/29/98	J.Pellicer	T.Smith	P.Corser
0	PART B PERMIT APPLICATION	12/12/97	PGC/JPP	E.Simonsen	P.Corser

TRIASSIC PARK
WASTE DISPOSAL FACILITY

DRAWING TITLE:
SUMP CROSS-SECTIONS - PHASE 1A

TerraMatrix
MONTGOMERY WATSON
Mining Group

Sheet 1 Of 1 Sheets
SCALE: See Scale Bar
DRAWING No. 16

AutoCAD FILE: SUMP2.DWG PROJECT NUMBER: 602-0200

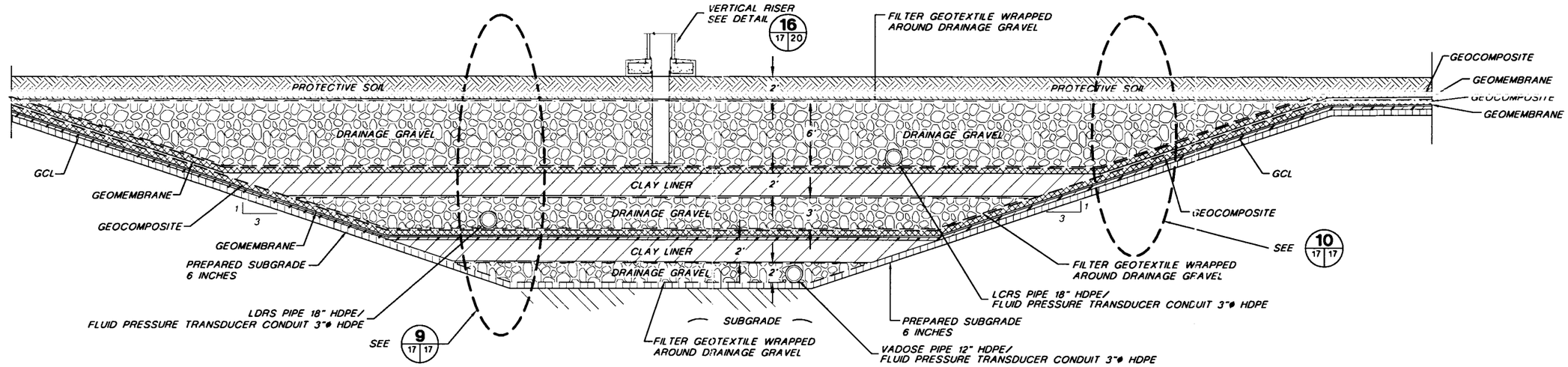

8 16 17 TYPICAL SUMP DETAIL

SCALE
0 5.0' 10.0'
Feet

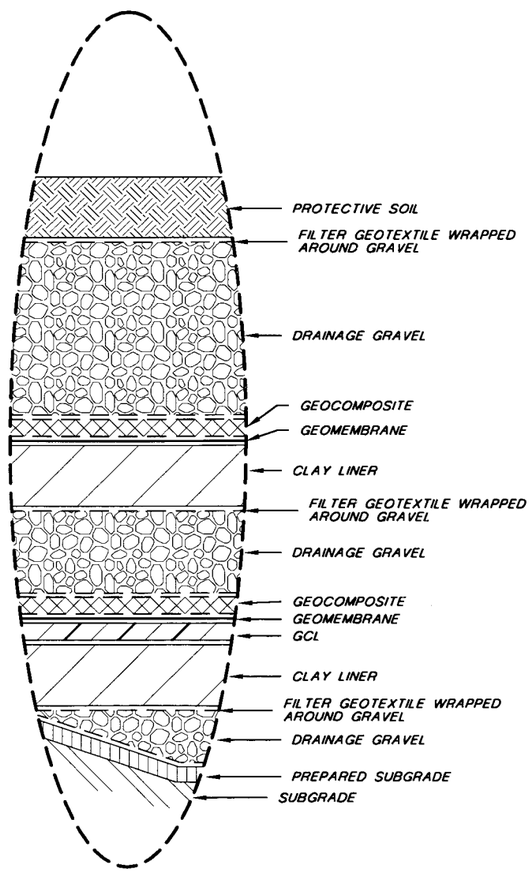

9 17 17 EXAGGERATED GEOSYNTHETIC COMPONENT DETAIL

Not To Scale

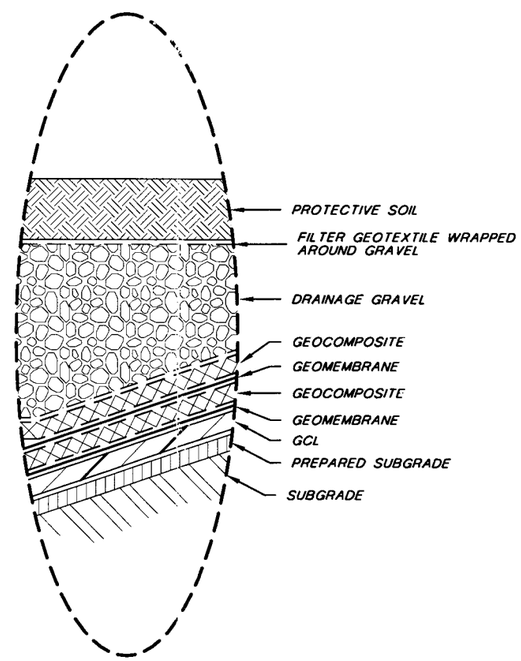

10 17 17 EXAGGERATED GEOSYNTHETIC COMPONENT DETAIL

Not To Scale

NOTE:
FOR GENERAL NOTES AND LEGEND INFORMATION SEE DRAWING No 2, "INDEX, LEGEND AND GENERAL NOTES".

Not For Construction

REV No	REVISIONS	DATE	DESIGN BY	DRAWN BY	REVISIED AND SIGNED BY
1	NOVEMBER 1998 REVISION	10/29/98	J.Pellicer	T.Smith	P.Corser
0	PART B PERMIT APPLICATION	12/12/97	PGC/JPP	E.Simonsen	P.Corser

PATRICK G. CORSER NEW MEXICO 12236 REGISTERED PROFESSIONAL ENGINEER

PROFESSIONAL ENGINEER'S STATEMENT
I, Patrick G. Corser, state that this map was prepared under my supervision and all the information presented hereon is true and correct to the best of my knowledge and information.
11/5/98 Patrick G. Corser
Date Patrick G. Corser, NM P.E. 12236

TRIASSIC PARK WASTE DISPOSAL FACILITY

DRAWING TITLE:
TYPICAL SUMP DETAIL CROSS-SECTION

TerraMatrix
MONTGOMERY WATSON
Mining Group

Sheet 1 Of 1 Sheets
SCALE: Not To Scale
DRAWING No. 17

AutoCAD FILE: TYP-SU ILDWG PROJECT NUMBER: 602-0200

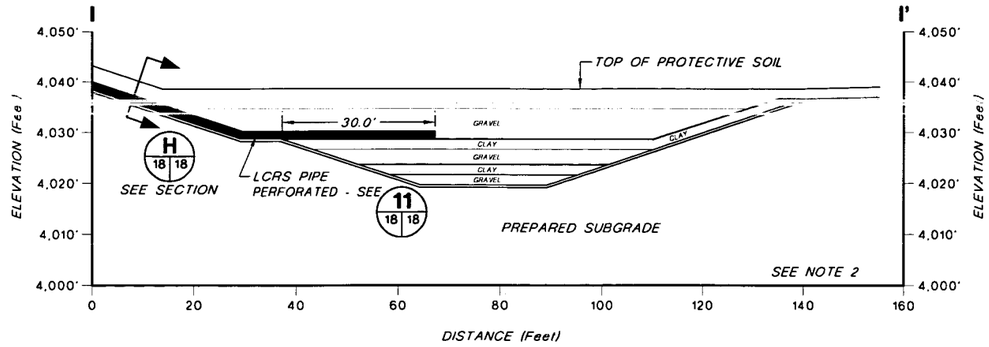

I 16|18 LCRS PIPE PLACEMENT IN SUMP

HORIZONTAL SCALE
0 15' 30'

VERTICAL SCALE
0 15' 30'

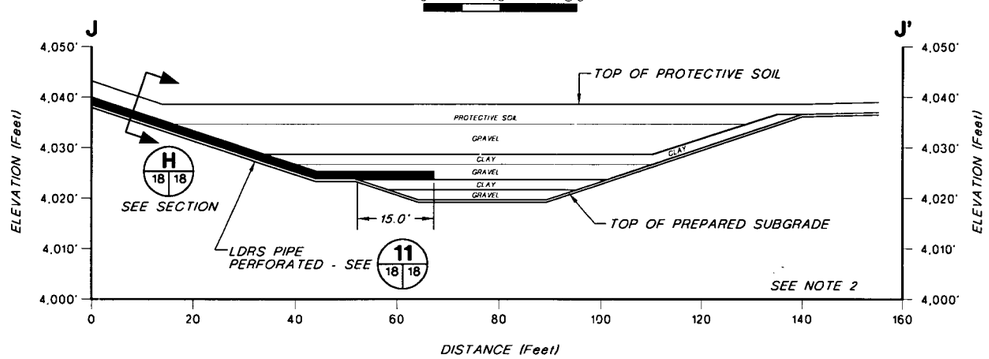

J 16|18 LDRS PIPE PLACEMENT IN SUMP

HORIZONTAL SCALE
0 15' 30'

VERTICAL SCALE
0 15' 30'

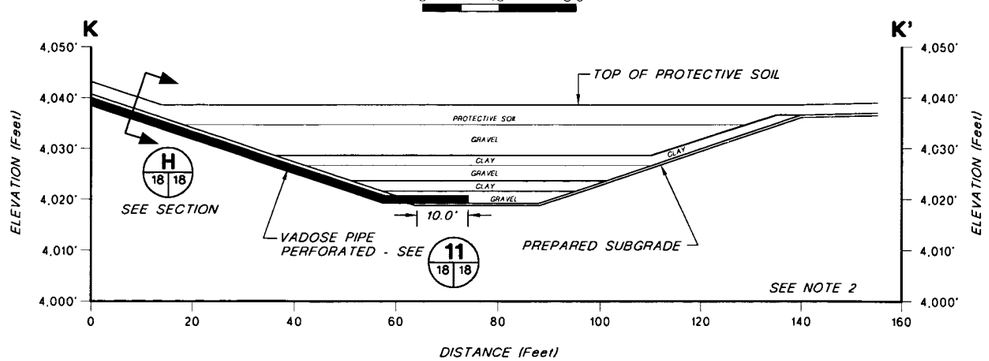

K 16|18 VADOSE PIPE PLACEMENT IN SUMP

HORIZONTAL SCALE
0 15' 30'

VERTICAL SCALE
0 15' 30'

NOTE:
1. FOR GENERAL NOTES AND LEGEND INFORMATION SEE DRAWING No. 2, "INDEX, LEGEND AND GENERAL NOTES".
2. SEE 8 18|17 FOR LINER DETAILS IN SUMP.

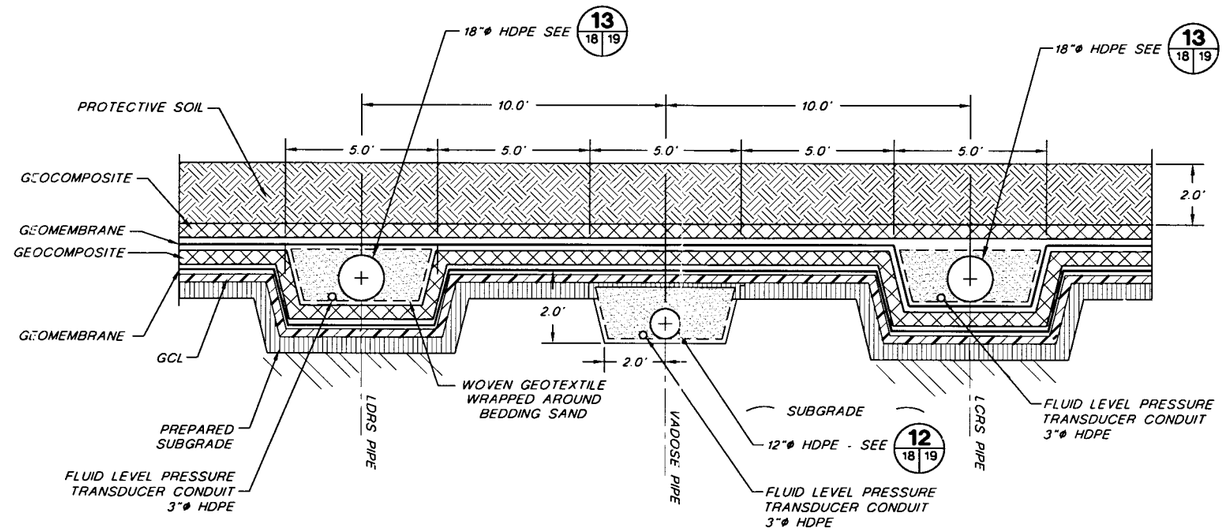

H 16|18 H 18|18 LDRS, VADOSE AND LCRS PIPES SLOPE SECTION

Not To Scale

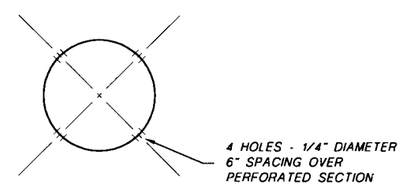

11 18|18 PIPE PERFORATION DETAIL

Not To Scale

PROFESSIONAL ENGINEER'S STATEMENT

I, Patrick G. Corser, state that this map was prepared under my supervision and all the information presented hereon is true and correct to the best of my knowledge and information.

11/5/98 Patrick G. Corser
Date Patrick G. Corser, NM P.E. 12236

PATRICK G. CORSER NEW MEXICO 12236 REGISTERED PROFESSIONAL ENGINEER

Not For Construction

REV No.	REVISIONS	DATE	DESIGN BY	DRAWN BY	REVIEWED AND SIGNED BY
1	NOVEMBER 1998 REVISION	10.29.98	J.Pelicer	T.Smith	P.Corser
0	PART B PERMIT APPLICATION	12/12/97	PGC/JPP	K.Conrath	P.Corser

TRIASSIC PARK
WASTE DISPOSAL FACILITY

DRAWING TITLE:
VADOSE, LDRS, LCRS CROSS-SECTIONS AND DETAILS

TerraMatrix
MONTGOMERY WATSON
Mining Group

Sheet 1 Of 1 Sheets
SCALE: See Scale Bar
DRAWING No. 18

PROJECT NUMBER: 602-0200
AutoCAD FILE: PS-DET

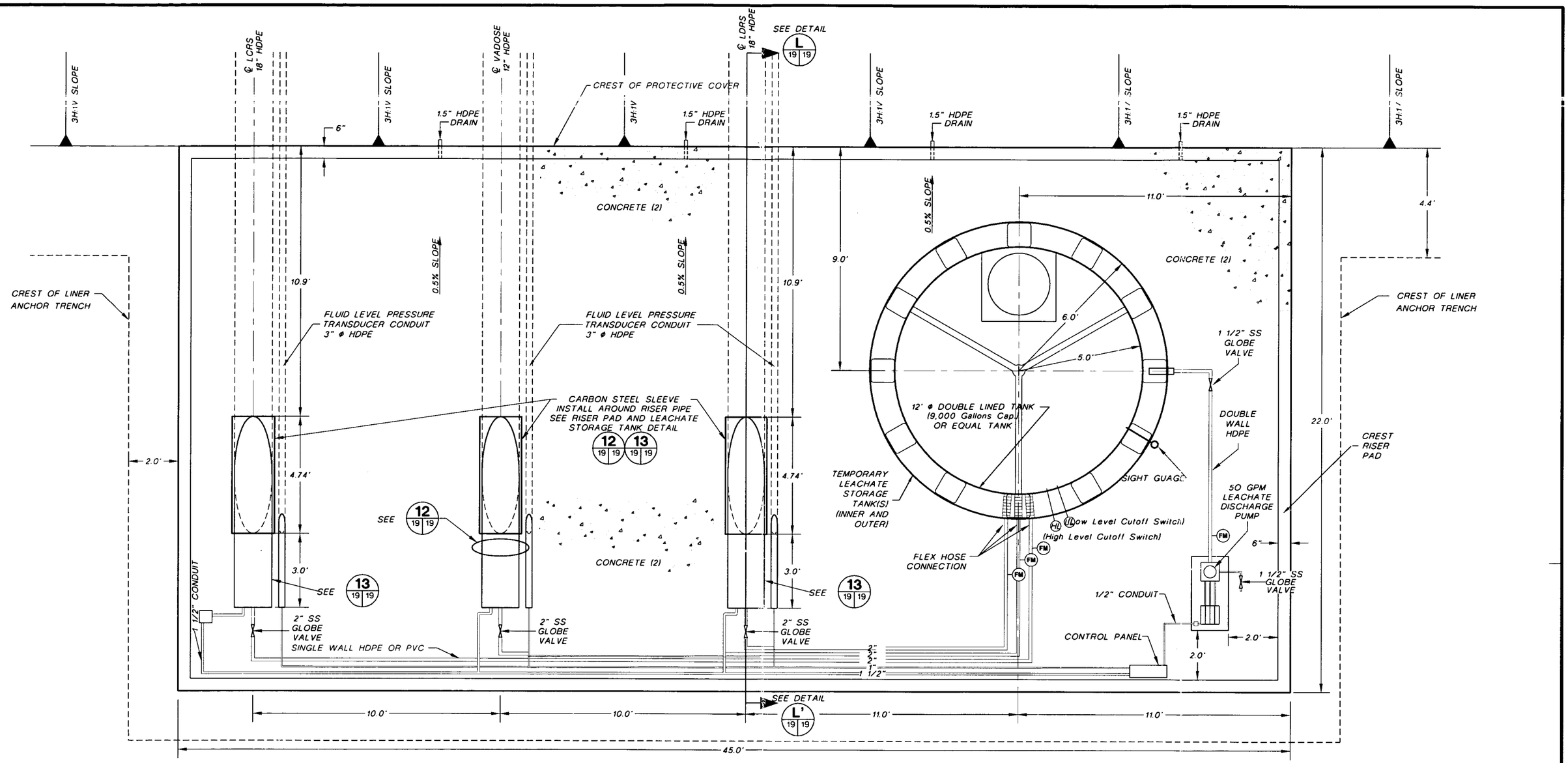

CREST RISER PAD AND LEACHATE STORAGE TANK - PLAN VIEW

SCALE
0 2.0' 4.0'
Feet

Not For Construction

REV No	REVISIONS	DATE	DESIGN BY	DRAWN BY	REVIEWED AND SIGNED BY
1	NOVEMBER 1998 REVISION	10/29/98	J.Pellicer	T.Smith	P.Corser
0	PART B PERMIT APPLICATION	12/12/97	PGC/JPP	M.Mathisen	P.Corser

PATRICK G. CORSER NEW MEXICO 12236 REGISTERED PROFESSIONAL ENGINEER

PROFESSIONAL ENGINEER'S STATEMENT

I, Patrick G. Corser, state that this map was prepared under my supervision and all the information presented herein is true and correct to the best of my knowledge and information.

11/5/98 — Date

Patrick G. Corser, NM P.E. 12236

TRIASSIC PARK
WASTE DISPOSAL FACILITY

DRAWING TITLE:
CREST RISER PAD AND LEACHATE STORAGE TANK PLAN VIEW AND CROSS-SECTIONS

TerraMatrix
MONTGOMERY WATSON
Mining Group

Sheet 1 Of 2 Sheets
SCALE: See Scale Bar
DRAWING No. 19

NOTE:
1) FOR GENERAL NOTES AND LEGEND INFORMATION SEE DRAWING No. 2, "INDEX, LEGEND AND GENERAL NOTES".
2) FOR CONCRETE DETAILS SEE DRAWING 45.

AutoCAD FILE: CRPLS1 DWG PROJECT NUMBER: 622-0200

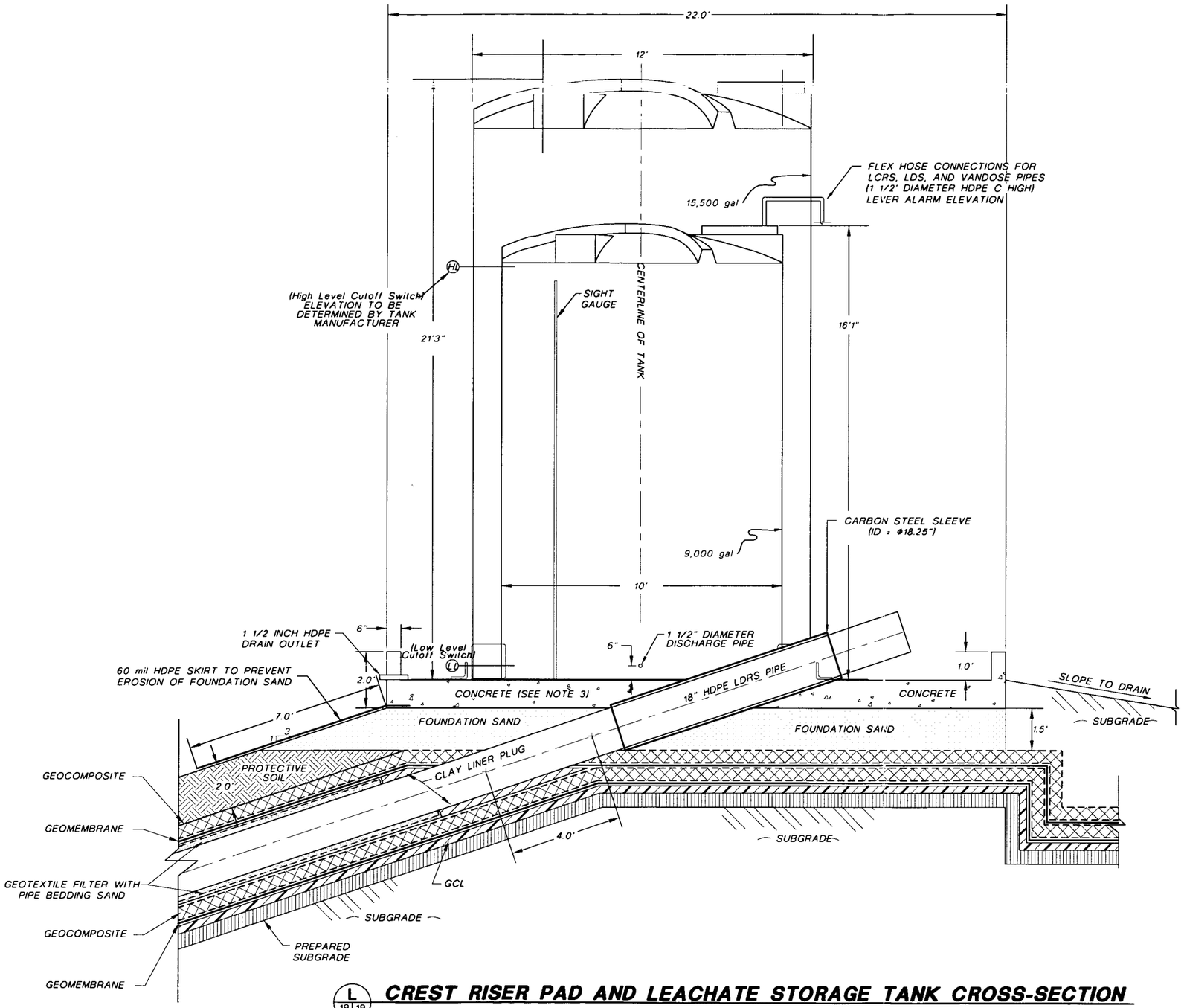

L 19|19 CREST RISER PAD AND LEACHATE STORAGE TANK CROSS-SECTION

SCALE
0 2.0' 4.0'
Feet

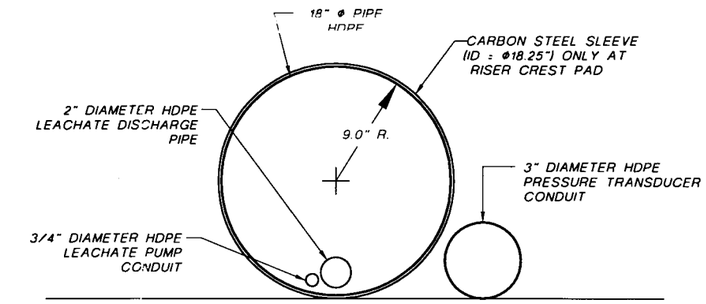

13 18|19 LCRS AND LDRS RISER PIPE DETAIL

SCALE
0 0.5' 1.0'
Feet

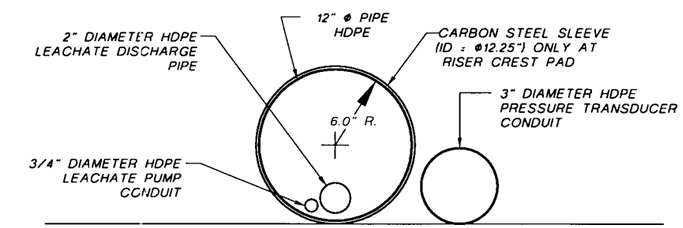

12 18|19 VADOSE RISER PIPE DETAIL

SCALE
0 0.5' 1.0'
Feet

NOTE:

1) FOR GENERAL NOTES AND LEGEND INFORMATION SEE DRAWING No. 2, "INDEX, LEGEND AND GENERAL NOTES".

2) PIPE CONNECTION AND TANK ACCESSORIES TO BE SPECIFIED BY TANK SUPPLIER.

3) FOR CONCRETE DETAILS SEE DRAWING 45.

PATRICK G. CORSER NEW MEXICO 12236 REGISTERED PROFESSIONAL ENGINEER

PROFESSIONAL ENGINEER'S STATEMENT

I, Patrick G. Corser, state that this map was prepared under my supervision and all the information presented hereon is true and correct to the best of my knowledge and information.

11/5/98 Date — Patrick G. Corser, NM P.E. 12236

Not For Construction

REV. No.	REVISIONS	DATE	DESIGN BY	DRAWN BY	REVIEWED AND SIGNED BY
1	NOVEMBER 1998 REVISION	10/29/98	J.Pellicer	T.Smith	P.Corser
0	PART B PERMIT APPLICATION	12/12/97	PGC/JPP	M.Mathisen	P.Corser

TRIASSIC PARK
WASTE DISPOSAL FACILITY

DRAWING TITLE:
CREST RISER PAD AND LEACHATE STORAGE TANK PLAN VIEW AND CROSS-SECTIONS

TerraMatrix
MONTGOMERY WATSON
Mining Group

Sheet 2 Of 2 Sheets
SCALE: See Scale Bar
DRAWING No. 19

AutoCAD FILE: CRPLST WG PROJECT NUMBER: 602-0200

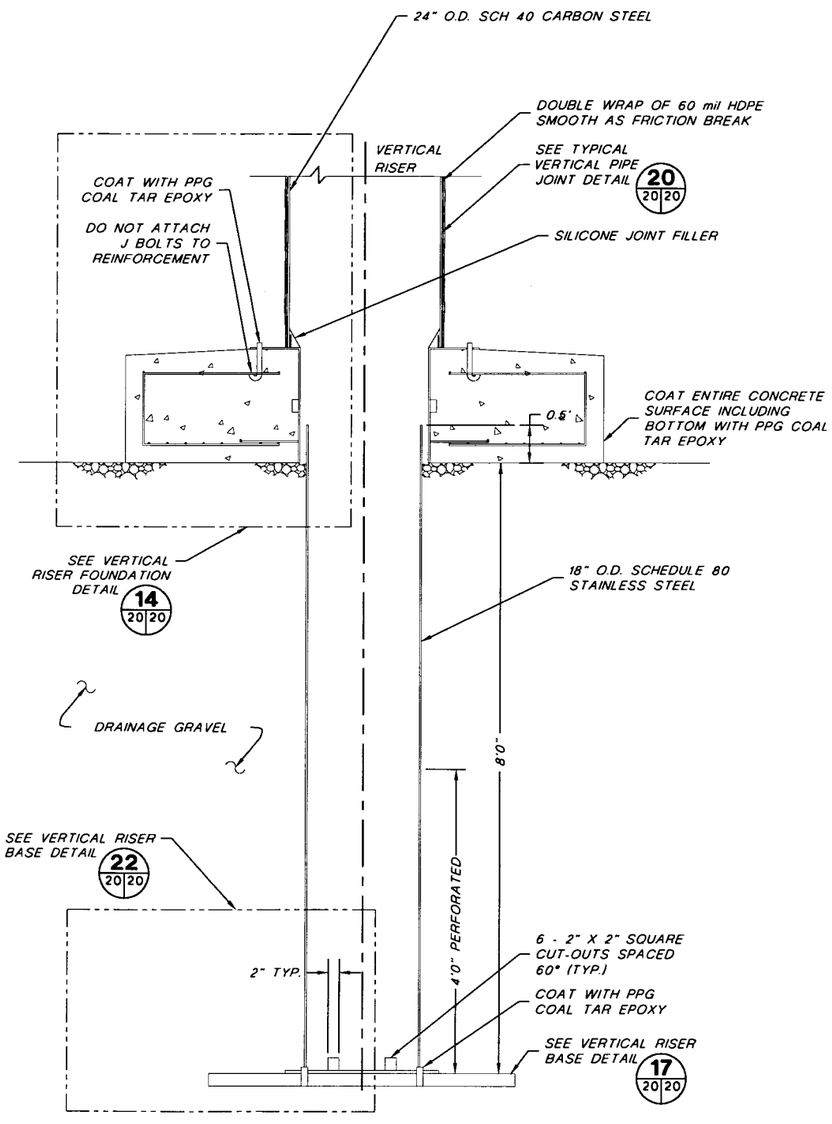

16 17|20 VERTICAL RISER SECTION

SCALE
0 1' 2'
Feet

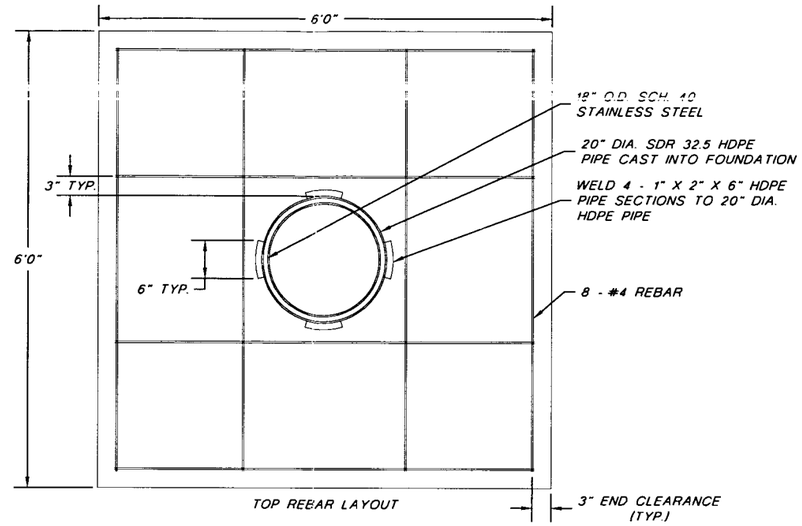

TOP REBAR LAYOUT

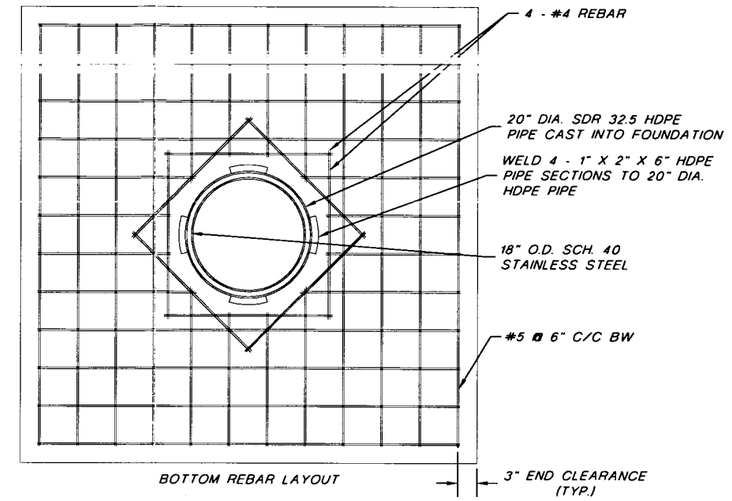

BOTTOM REBAR LAYOUT

21 20|20 VERTICAL RISER BASE DETAIL

SCALE
0 1' 2'
Feet

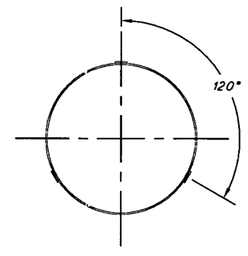

PLAN

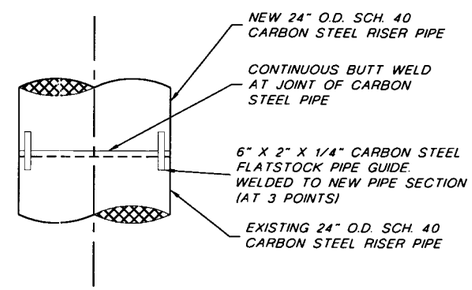

SECTION

20 20|20 TYPICAL VERTICAL RISER PIPE JOINT

SCALE
0 1' 2'
Feet

NOTE:
FOR GENERAL NOTES AND LEGEND INFORMATION SEE DRAWING No. 2, "INDEX, LEGEND AND GENERAL NOTES".

PROFESSIONAL ENGINEER'S STATEMENT

I, Patrick G. Corser, state that this map was prepared under my supervision and all the information presented hereon is true and correct to the best of my knowledge and information.

11/5/98 Date — Patrick G. Corser, NM P.E. 12236

PATRICK G. CORSER NEW MEXICO 12236 REGISTERED PROFESSIONAL ENGINEER

Not For Construction

REV No	REVISIONS	DATE	DESIGN BY	DRAWN BY	REVIEWED AND SIGNED BY
1	NOVEMBER 1998 REVISION	10/29/98	J.Pellicer	T.Smith	P.Corser
0	PART B PERMIT APPLICATION	12/12/97	PGC/JPP	E.Simonsen	P.Corser

TRIASSIC PARK WASTE DISPOSAL FACILITY

DRAWING TITLE:
VERTICAL RISER DETAILS

TerraMatrix MONTGOMERY WATSON Mining Group

Sheet 1 Of 2 Sheets
SCALE: As Noted
DRAWING No. 20

PROJECT NUMBER: 602-0200
AutoCAD FILE: GLF-SP

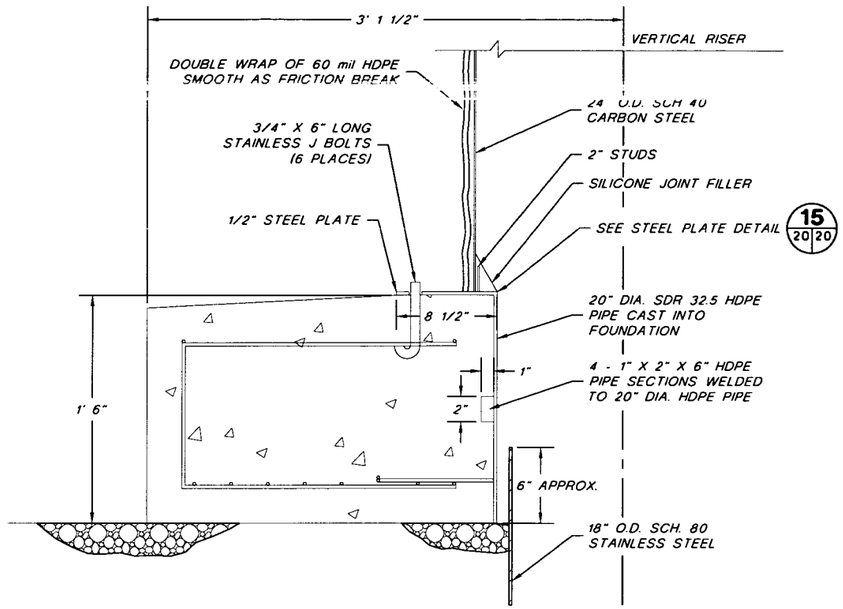

14/20|20 VERTICAL RISER FOUNDATION DETAIL

SCALE 0 0.5' 1' Feet

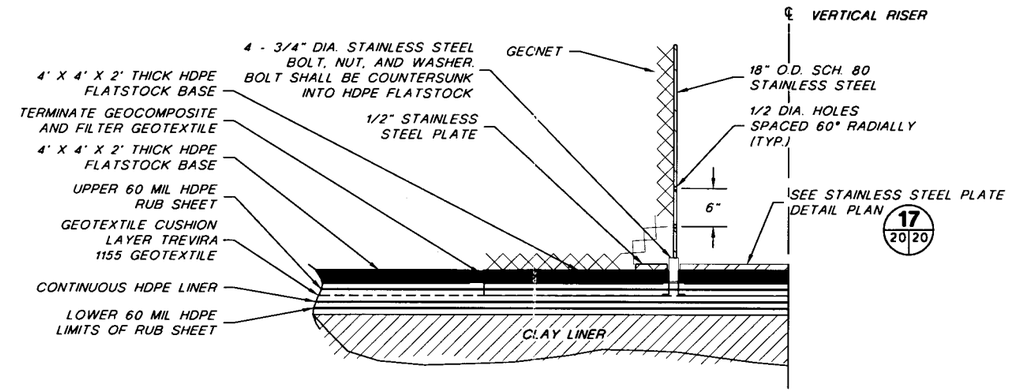

22/20|20 VERTICAL RISER BASE DETAIL

SCALE 0 0.5' 1' Feet

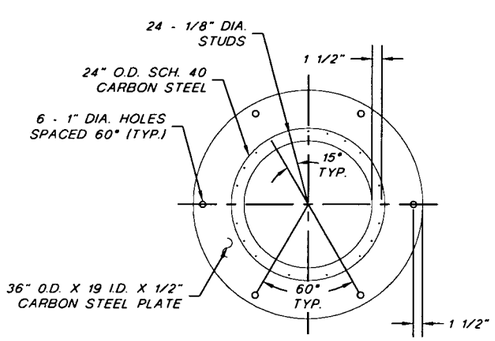

15/20|20 STEEL PLATE DETAIL

SCALE 0 1' 2' Feet

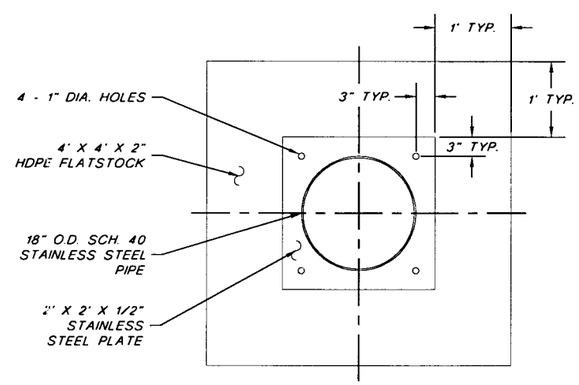

17/20|20 STAINLESS STEEL PLATE DETAIL

SCALE 0 1' 2' Feet

NOTE:
FOR GENERAL NOTES AND LEGEND INFORMATION SEE DRAWING No. 2, "INDEX, LEGEND AND GENERAL NOTES".

PATRICK G. CORSER NEW MEXICO 12236 REGISTERED PROFESSIONAL ENGINEER

PROFESSIONAL ENGINEER'S STATEMENT

I, Patrick G. Corser, state that this map was prepared under my supervision and all the information presented hereon is true and correct to the best of my knowledge and information.

11/5/98 PATRICK CORSER
Date Patrick G. Corser, NM P.E. 12236

Not For Construction

REV No	REVISIONS	DATE	DESIGN BY	DRAWN BY	REVIEWED AND SIGNED BY	
1	NOVEMBER 1998 REVISION	10/29/98	J.Pellicer	T.Smith	P.Corser	
0	PART B PERMIT APPLICATION	12/12/97	PGC/JJP	E.Simonsen	P.Corser	

TRIASSIC PARK
WASTE DISPOSAL FACILITY

DRAWING TITLE:
VERTICAL RISER DETAILS

TerraMatrix
MONTGOMERY WATSON
Mining Group

Sheet 2 Of 2 Sheets
SCALE: As Noted
DRAWING No. 20

AutoCAD FILE: GLF-SR.G PROJECT NUMBER: 602-0200

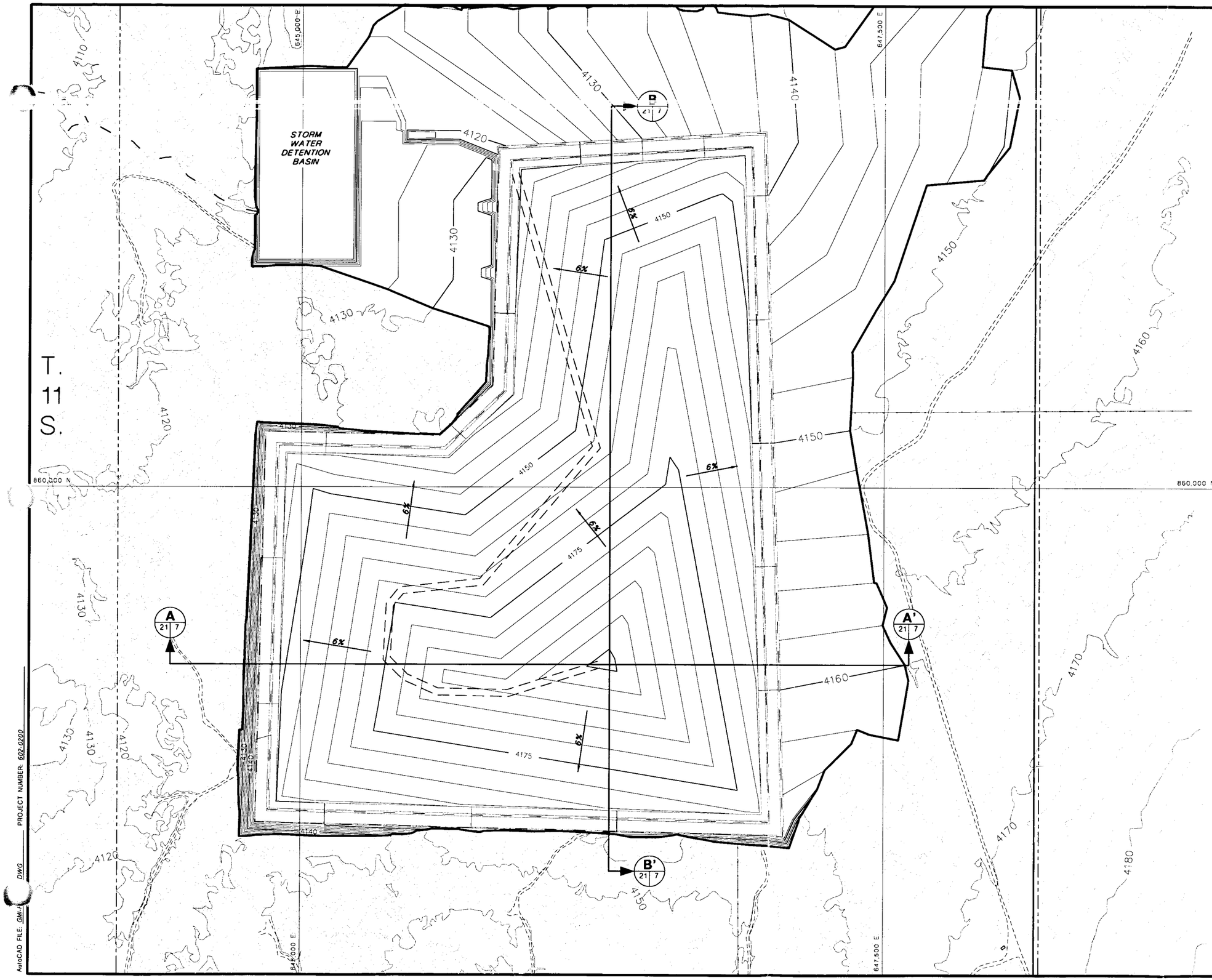

NOTES:

1. FOR GENERAL NOTES AND LEGEND INFORMATION SEE DRAWING No. 2, "INDEX, LEGEND AND GENERAL NOTES".
2. TOPOGRAPHY FROM AERIAL SURVEYS PERFORMED AUGUST 1997 BY KOOGLE AND POULS ENGINEERING.

PATRICK G. CORSER NEW MEXICO 12236 REGISTERED PROFESSIONAL ENGINEER

PROFESSIONAL ENGINEER'S STATEMENT

I, Patrick G. Corser, state that this map was prepared under my supervision and all the information presented hereon is true and correct to the best of my knowledge and information.

11/5/98 PATRICK CORSER

Date *Patrick G. Corser, NM P.E. 12236*

SCALE

200' 0 200' 400'

CONTOUR INTERVAL 5 FT.
SURFACE TOPOGRAPHY CONTOUR INTERVAL 2 FT.

Not For Construction

REV No.	REVISIONS	DATE	DESIGN BY	DRAWN BY	REVIEWED AND SIGNED BY
1	NOVEMBER 1998 REVISION	10/29/98	J.Pellicer	T.Smith	P.Corser
0	PART B PERMIT APPLICATION	12/12/97	PGC/JPP	T.Smith	P.Corser

TRIASSIC PARK
WASTE DISPOSAL FACILITY

DRAWING TITLE:

FINAL GRADING PLAN - TOP OF WASTE CONTOURS

TerraMatrix
MONTGOMERY WATSON
Mining Group

Sheet 1 Of 1 Sheets

SCALE: AS NOTED

DRAWING No. 21

AutoCAD FILE: GM-1 DWG PROJECT NUMBER: 602-0200

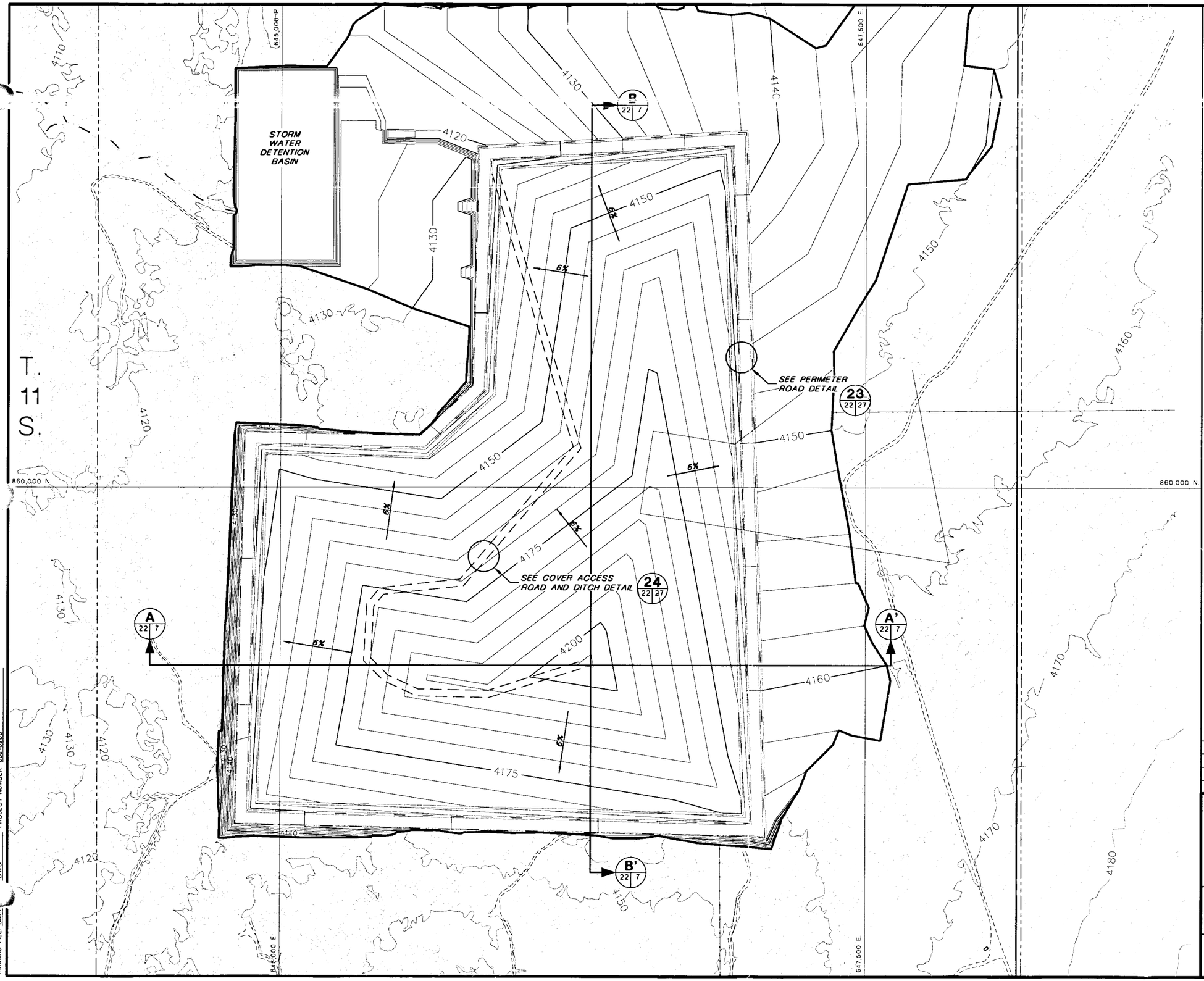

NOTES:
1. FOR GENERAL NOTES AND LEGEND INFORMATION SEE DRAWING No. 2, "INDEX, LEGEND AND GENERAL NOTES".
2. TOPOGRAPHY FROM AERIAL SURVEYS PERFORMED AUGUST 1997 BY KOOGLE AND POULS ENGINEERING.

PATRICK G. CORSER
NEW MEXICO
12236
REGISTERED PROFESSIONAL ENGINEER

PROFESSIONAL ENGINEER'S STATEMENT

I, Patrick G. Corser, state that this map was prepared under my supervision and all the information presented hereon is true and correct to the best of my knowledge and information.

11/5/98 — Patrick G. Corser
Date — Patrick G. Corser, NM P.E. 12236

SCALE
200' 0 200' 400'
CONTOUR INTERVAL 5 FT.
SURFACE TOPOGRAPHY CONTOUR INTERVAL 2 FT.

Not For Construction

REV No	REVISIONS	DATE	DESIGN BY	DRAWN BY	REVIEWED AND SIGNED BY
1	NOVEMBER 1998 REVISION	10/29/98	J.Pellicer	T.Smith	P.Corser
0	PART B PERMIT APPLICATION	12/12/97	PGC/JPP	T.Smith	P.Corser

TRIASSIC PARK
WASTE DISPOSAL FACILITY

DRAWING TITLE:
FINAL GRADING PLAN - TOP OF VEGETATIVE COVER CONTOURS

TerraMatrix
MONTGOMERY WATSON
Mining Group

Sheet 1 Of 1 Sheets
SCALE: AS NOTED
DRAWING No. 22

AutoCAD FILE: GM-F DWG PROJECT NUMBER 602-0200

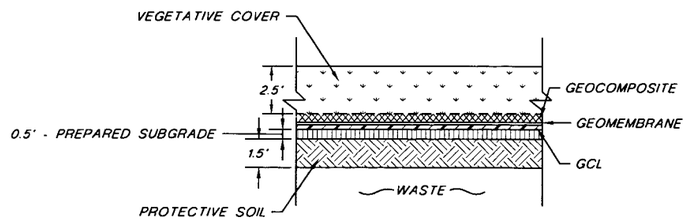

18 / 23 23 COVER DETAIL

NOT TO SCALE

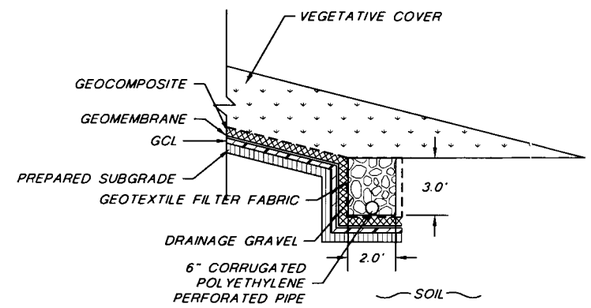

19 / 23 23 COVER ANCHOR TRENCH DETAIL

NOT TO SCALE

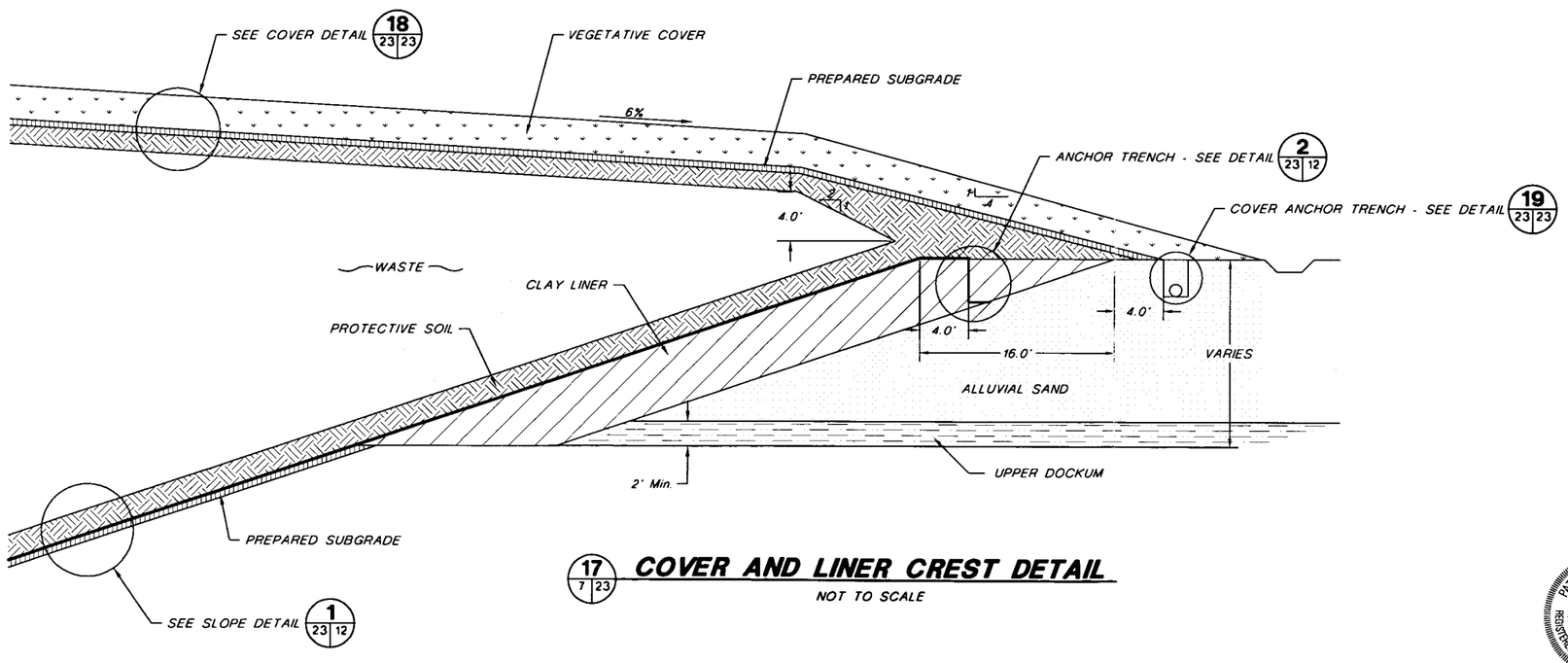

17 / 7 23 COVER AND LINER CREST DETAIL

NOT TO SCALE

NOTE:
FOR GENERAL NOTES AND LEGEND INFORMATION SEE DRAWING No. 2. "INDEX, LEGEND AND GENERAL NOTES".

PATRICK G. CORSER NEW MEXICO 12236 REGISTERED PROFESSIONAL ENGINEER

PROFESSIONAL ENGINEER'S STATEMENT

I, Patrick G. Corser, state that this map was prepared under my supervision and all the information presented hereon is true and correct to the best of my knowleage and information.

11/5/98 — Patrick G. Corser
Date — Patrick G. Corser, NM P.E. 12236

Not For Construction

REV No.	REVISIONS	DATE	DESIGN BY	DRAWN BY	REVIEWED AND SIGNED BY
1	NOVEMBER 1998 REVISION	10/29/98	J.Pelicer	T.Smith	P.Corser
0	PART B PERMIT APPLICATION	12/12/97	PGC/JPP	T.Smith	P.Corser

TRIASSIC PARK
WASTE DISPOSAL FACILITY

DRAWING TITLE:

FINAL COVER DETAILS

TerraMatrix
MONTGOMERY WATSON
Mining Group

Sheet 1 Of 1 Sheets
SCALE: AS NOTED
DRAWING No. 23

AutoCAD FILE: GANDY DETAIL PROJECT NUMBER: 602-0200

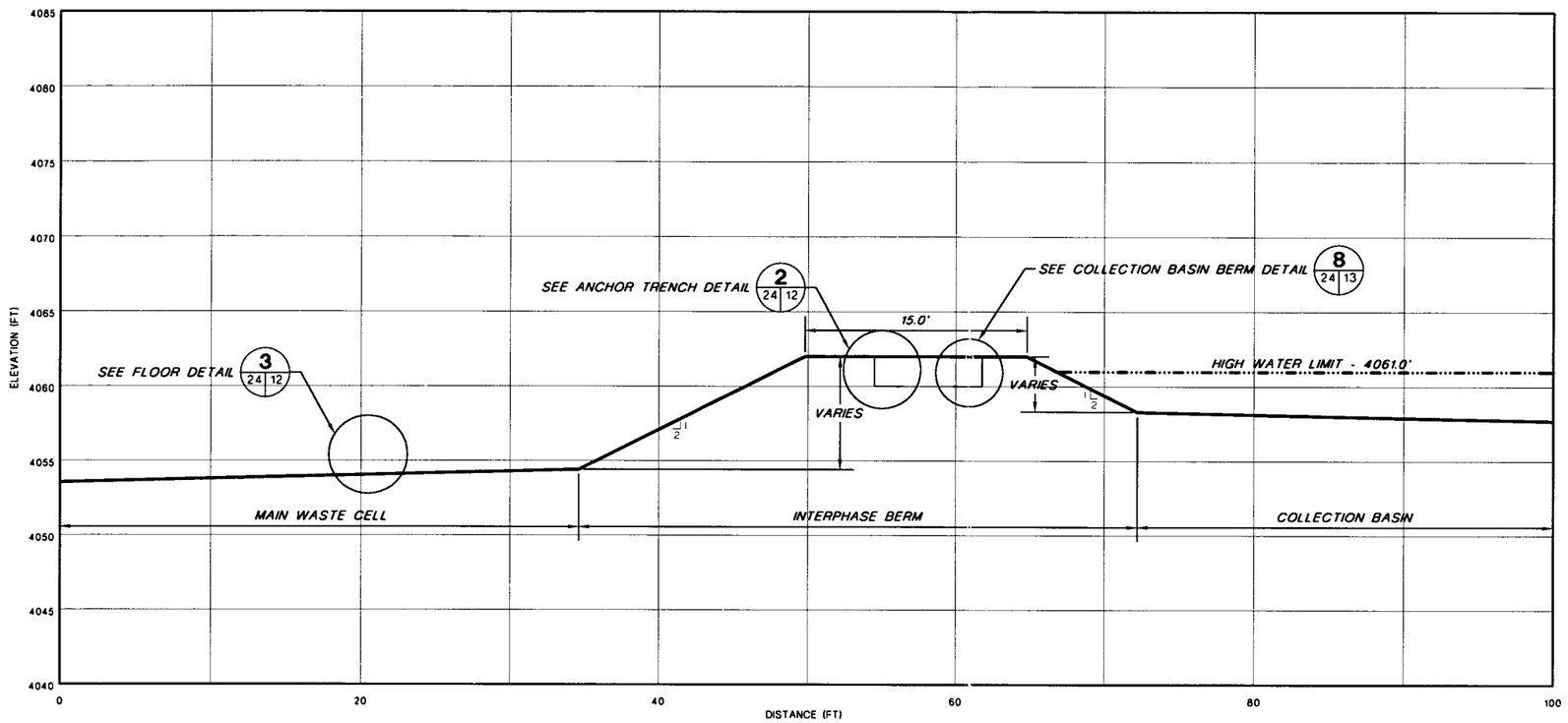

M 13 24 INTERPHASE BERM CROSS-SECTION M

HORIZONTAL SCALE
0 5 10

VERTICAL SCALE
0 5 10

Not For Construction

REV. No	REVISIONS	DATE	DESIGN BY	DRAWN BY	REVIEWED AND SIGNED BY
1	NOVEMBER 1998 REVISION	10/29/98	J.Pelicer	T.Smith	P.Corser
0	PART B PERMIT APPLICATION	12/12/97	PGC/JPP	T.Smith	P.Corser

PATRICK G. CORSER NEW MEXICO 12236 REGISTERED PROFESSIONAL ENGINEER

PROFESSIONAL ENGINEER'S STATEMENT

I, Patrick G. Corser, state that this map was prepared under my supervision and all the information presented hereon is true and correct to the best of my knowledge and information.

11/5/98 — Patrick G. Corser
Date — Patrick G. Corser, NM P.E. 12236

TRIASSIC PARK
WASTE DISPOSAL FACILITY

DRAWING TITLE:

INTERPHASE BERM SECTION

TerraMatrix
MONTGOMERY WATSON
Mining Group

Sheet 1 Of 1 Sheets
SCALE: As Shown
DRAWING No 24

NOTE:
FOR GENERAL NOTES AND LEGEND INFORMATION SEE DRAWING No. 2, "INDEX, LEGEND AND GENERAL NOTES".

PROJECT NUMBER 602.0200
AutoCAD FILE: GANDY

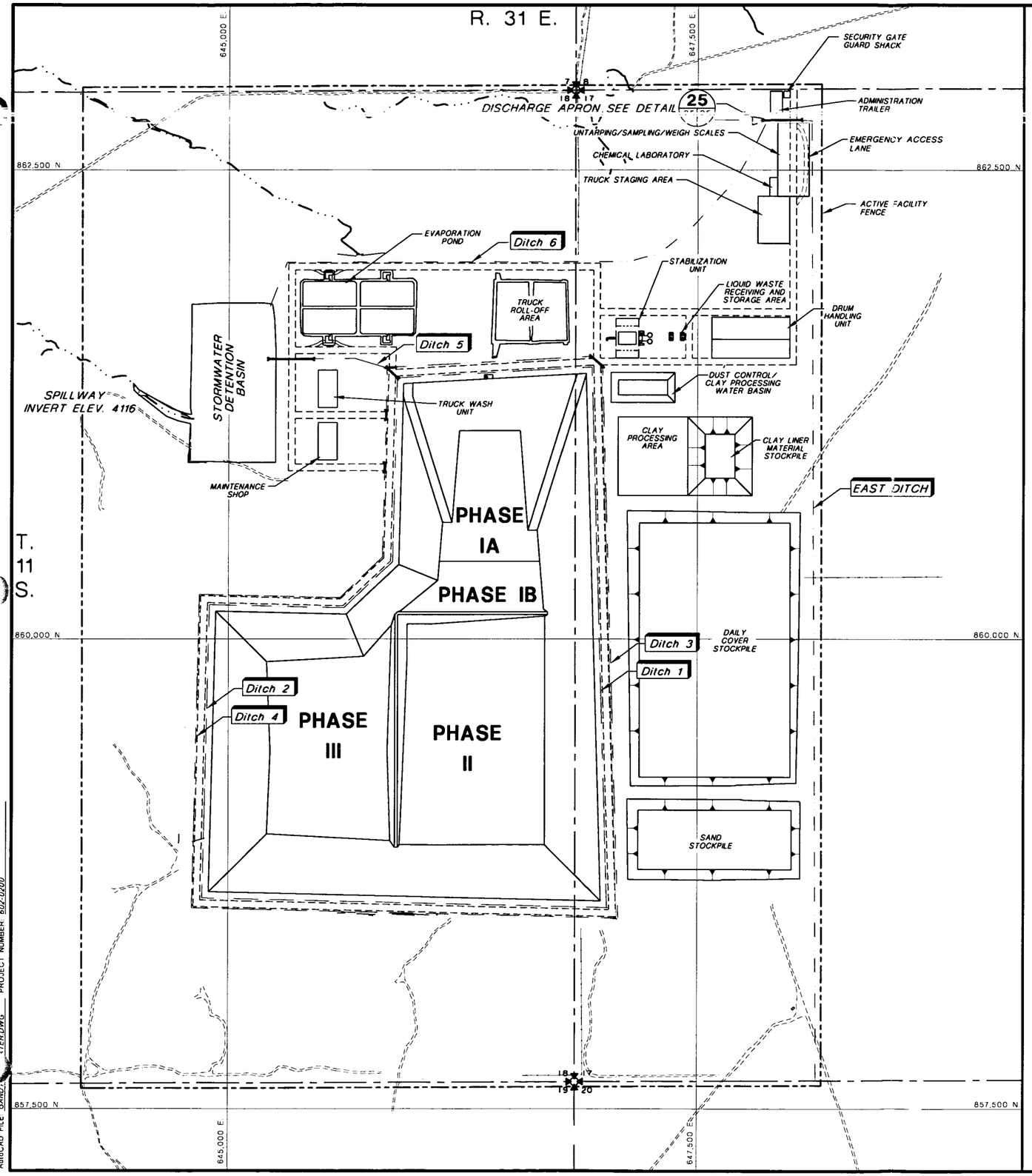

NOTES:
1. FOR GENERAL NOTES AND LEGEND INFORMATION SEE DRAWING No. 2, "INDEX, LEGEND AND GENERAL NOTES".
2. DITCHES 7 & 8 ARE SHOWN ON DRAWING 13.

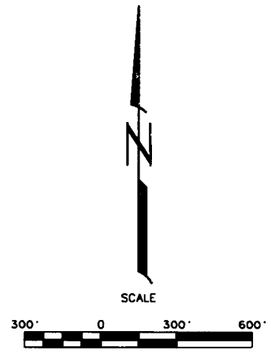

Not For Construction

REV No	REVISIONS	DATE	DESIGN BY	DRAWN BY	REVIEWED AND SIGNED BY
1	NOVEMBER 1998 REVISION	10/29/98	J.Pelicer	T.Smith	P.Corser
0	PART B PERMIT APPLICATION	12/12/97	PGC/JPP	T.Smith	P.Corser

PATRICK G. CORSER NEW MEXICO 12236 REGISTERED PROFESSIONAL ENGINEER

PROFESSIONAL ENGINEER'S STATEMENT

I, Patrick G. Corser, state that this map was prepared under my supervision and all the information presented hereon is true and correct to the best of my knowledge and information.

11/5/98 — Patrick G. Corser, NM P.E. 12236
Date

TRIASSIC PARK
WASTE DISPOSAL FACILITY

DRAWING TITLE:
SURFACE WATER CONTROL FEATURES

TerraMatrix
MONTGOMERY WATSON
Mining Group

Sheet 1 Of 2 Sheets
SCALE: AS NOTED
DRAWING No. 25

AutoCAD FILE: GAND...TER.DWG PROJECT NUMBER: 602.0200

CHANNEL DESIGNS

Ditch	25-yr,24-hr Flow Q (cfs)	Slope (%)	Bottom Width (BW) (ft)	Sideslope H:1V	Depth of Flow (D) (ft) 1	Velocity (fps) 2	Freeboard (ft)	Maximum Total Depth (ft)	Erosion Protection	2-yr,24-hr Flow Q (cfs)	Velocity (fps)
1	34.2	0.5-2.0	0	2	2.1	6.7	0.3	2.4	None	4.8	4.3
2	62.2	0.5-1.0	0	2	2.6	6.0	0.3	2.9	None	8.3	3.6
3	126.6	0.5-1.0	5	3	2.4	5.8	0.3	2.7	None	40	4.8
		1.1-2.0	5	3	2.1	6.6	0.3	2.3	Riprap D50=6"		
4	6.8	0.5-1.0	0	2	1.1	3.5	0.3	1.4	None		
5	217.3	0.5-1.0	10	2	2.3	7.3	0.3	2.6	None	53.6	5.0
6	30.1	0.5-1.0	0	2	2.0	5.0	0.3	2.3	None		
7 Lower	7.3	1	0	1.5	0.9	6.0	0.3	1.2	HDPE		
7 Upper	7.3	10	0	1.5	0.6	14.2	0.3	0.9	HDPE		
8 Lower	19.3	1	0	1.5	1.3	7.6	0.3	1.6	HDPE		
8 Upper	19.3	10	0	1.5	0.8	18	0.3	1.1	HDPE		
East	272.8	0.5-0.8	16	3	2.3	6.0	0.3	2.6	Gravel D50=3"		
Final Cover Road Side	31.5	0.5-2.4	0	3	1.8	5.7	0.3	2.1	Gravel D50=3"		
Spillway	358(6)	0.5	20	3	2.4	5.4	1.0	3.4	Gravel D50=3"		

NOTES:
(1) Maximum allowable velocity for channels without erosion protection 5 fps
(2) Channels with velocities greater than 5 fps for the 25-yr event and less than the 5 fps for the 2 year storm will not be lined.
(3) Maximum allowable velocity for gravel lined channels is 6 fps.
(4) Depth of Flow determined from minimum grade of Channel.
(5) Flow Velocity determined from maximum grade of Channel.
(6) Design Flow for Spillway is 100YR - 24 HR.

CULVERT DESIGNS

Culvert On Ditch	Flow (cfs)	Culvert Capacity (cfs)	No. Of Culverts	Culvert Diameter (in)	Total Capacity (cfs)
East	272.8	155	2	54	310
3	126.6	50	3	36	150
4	6.8	9	1	18	9
5	217.3	135	2	54	270
1 and 2	96.4	50	2	36	100

NOTES: (1) Culverts were sized assuming a Headwater/Culvert Diameter= 1.5.

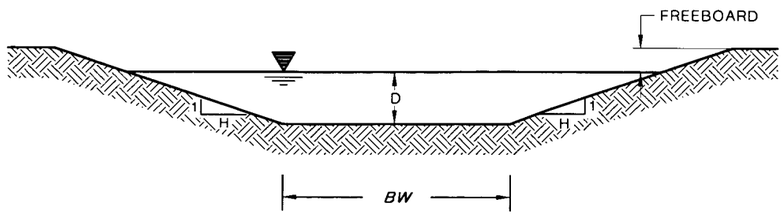

TYPICAL CHANNEL

NOTE:
FOR GENERAL NOTES AND LEGEND INFORMATION SEE DRAWING No. 2, "INDEX, LEGEND AND GENERAL NOTES".

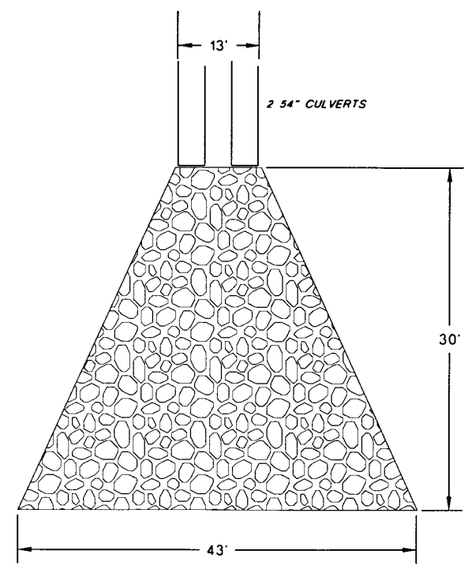

NOTE:
RIP RAP D_{50} = 2', DEPTH OF ROCK 3'

25 / 25 25 — RIP RAP OUTLET APRON DETAIL

Not To Scale

PATRICK G. CORSER NEW MEXICO 12236 REGISTERED PROFESSIONAL ENGINEER

PROFESSIONAL ENGINEER'S STATEMENT

I, Patrick G. Corser, state that this map was prepared under my supervision and all the information presented hereon is true and correct to the best of my knowledge and information.

11/5/98 — Patrick G. Corser
Date — Patrick G. Corser, NM P.E. 12236

Not For Construction

REV No.	REVISIONS	DATE	DESIGN BY	DRAWN BY	REVIEWED AND SIGNED BY
1	NOVEMBER 1998 REVISION	10/29/98	J.Pellicer	T.Smith	P.Corser
0	PART B PERMIT APPLICATION	12/12/97	PGC/JPP	K.Conrath	P.Corser

TRIASSIC PARK
WASTE DISPOSAL FACILITY

DRAWING TITLE:
SURFACE WATER CONTROL DETAILS

TerraMatrix
MONTGOMERY WATSON
Mining Group

Sheet 2 Of 2 Sheets
SCALE: Not to Scale
DRAWING No. 25

AutoCAD FILE: GANDY_DTLS.DWG PROJECT NUMBER: 602-0200

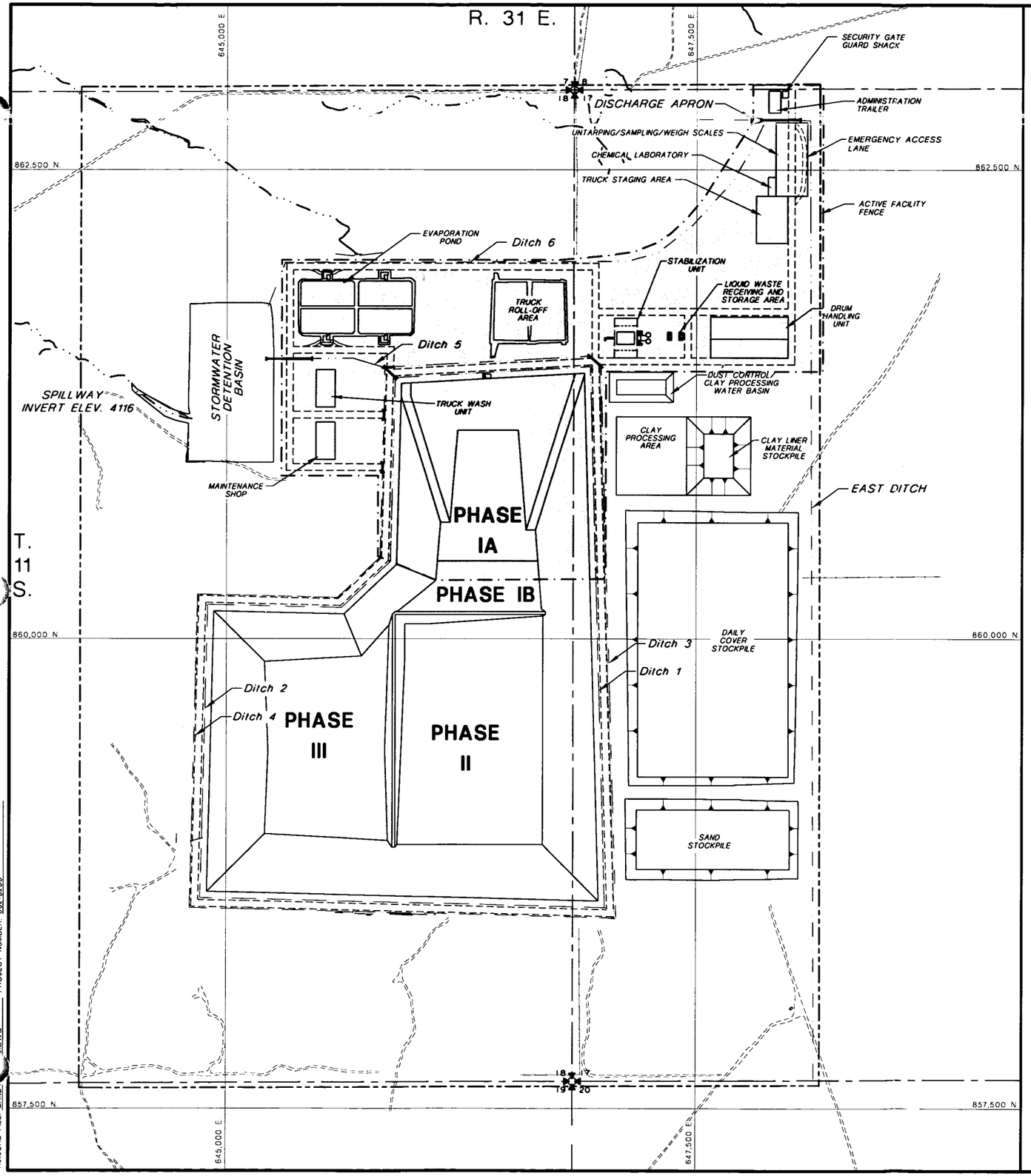

LEGEND

LIMITS OF LANDFILL OPERATIONS AND WASTE PROCESSING AREA

CONSTRUCTION OPERATIONS AREA

NOTES:
1. FOR GENERAL NOTES AND LEGEND INFORMATION SEE DRAWING No. 2, "INDEX, LEGEND AND GENERAL NOTES".

N

SCALE

300' 0 300' 600'

Not For Construction

REV. No.	REVISIONS	DATE	DESIGN BY	DRAWN BY	REVIEWED AND SIGNED BY
1	NOVEMBER 1998 REVISION	10/29/98	J.Pellicer	T.Smith	P.Corser
0	PART B PERMIT APPLICATION	12/12/97	PGC/JPP	T.Smith	P.Corser

PATRICK G. CORSER NEW MEXICO 12236 REGISTERED PROFESSIONAL ENGINEER

PROFESSIONAL ENGINEER'S STATEMENT

I, Patrick G. Corser, state that this map was prepared under my supervision and all the information presented hereon is true and correct to the best of my knowledge and information.

11/5/98 Patrick G. Corser
Date Patrick G. Corser, NM P.E. 12236

TRIASSIC PARK WASTE DISPOSAL FACILITY

DRAWING TITLE:

TRAFFIC PLAN

TerraMatrix
MONTGOMERY WATSON
Mining Group

Sheet 1 Of 2 Sheets
SCALE: AS NOTED
DRAWING No. 26

AutoCAD FILE: GANO_LDWG PROJECT NUMBER: 602-0200

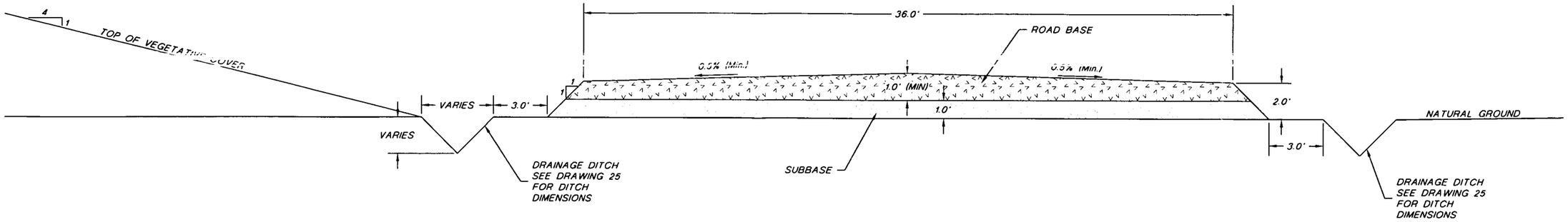

23 / 22 27 PERIMETER ROAD DETAIL

HORIZONTAL SCALE
0 3' 6'

VERTICAL SCALE
0 3' 6'

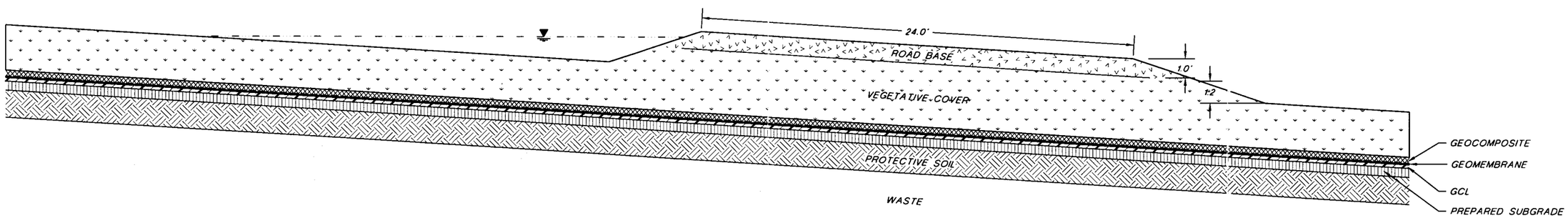

24 / 22 27 COVER ACCESS ROAD AND DITCH DETAIL

HORIZONTAL SCALE
0 3' 6'

VERTICAL SCALE
0 3' 6'

NOTES:
1. FOR GENERAL NOTES AND LEGEND INFORMATION SEE DRAWING No. 2, "INDEX, LEGEND AND GENERAL NOTES".
2. ROADBASE GRAVEL THICKNESS MAY BE REDUCED BASED ON EVALUATION OF SUBGRADE CONTOURS.

PATRICK G. CORSER NEW MEXICO 12236 REGISTERED PROFESSIONAL ENGINEER

PROFESSIONAL ENGINEER'S STATEMENT

I, Patrick G. Corser, state that this map was prepared under my supervision and all the information presented hereon is true and correct to the best of my knowleage and information.

11/5/98 Date — Patrick G. Corser, NM P.E. 12236

Not For Construction

REV No	REVISIONS	DATE	DESIGN BY	DRAWN BY	REVIEWED AND SIGNED BY
1	NOVEMBER 1998 REVISION	10/29/98	J.Pellicer	T.Smith	P.Corser
0	PART B PERMIT APPLICATION	12/12/97	PGC/JPP	TWS	PGC

TRIASSIC PARK
WASTE DISPOSAL FACILITY

DRAWING TITLE:
PERIMETER ROAD DETAILS

TerraMatrix
MONTGOMERY WATSON
Mining Group

Sheet 1 Of 1 Sheets
SCALE: AS NOTED
DRAWING No. 27

AutoCAD FILE: GANDY/JOB.DWG PROJECT NUMBER: 602-0200

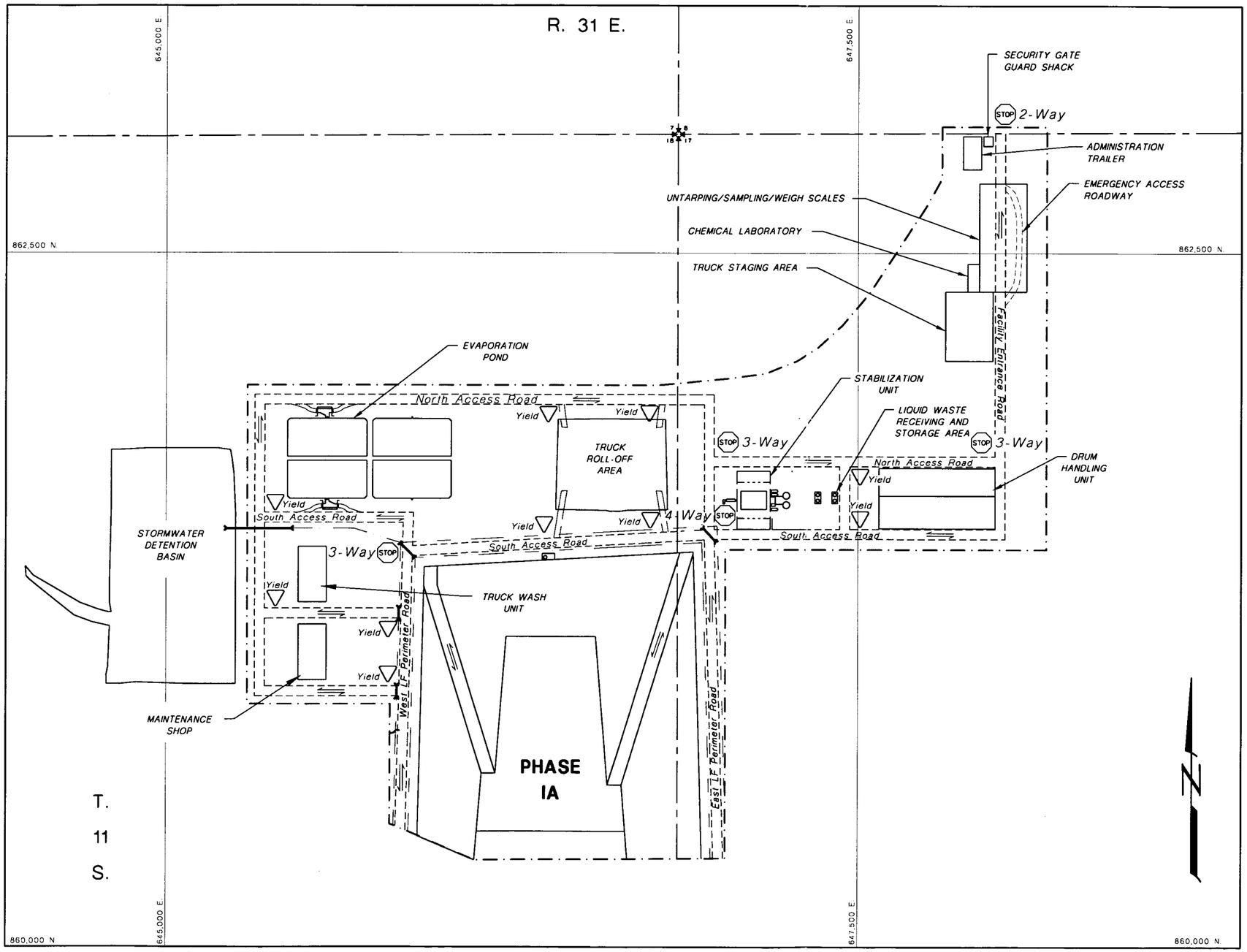

MAP KEY

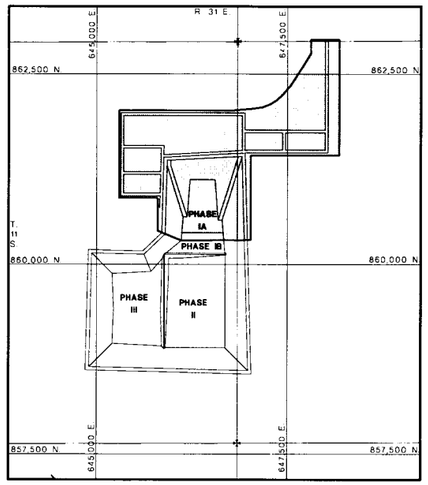

NOTES:

1. FOR GENERAL NOTES AND LEGEND INFORMATION SEE DRAWING No. 2, "INDEX, LEGEND AND GENERAL NOTES".
2. UNIMPROVED ROADS AND CONSTRUCTION HAUL ROADS NOT SHOWN. GRAVEL LINED ACCESS ROADS ARE 2 WAY TRAFFIC. ALL SITE ACCESS ROADS SPEED LIMIT IS 15 MPH, CONSTRUCTION HAUL ROAD SPEED LIMIT IS 35 MPH.

PATRICK G. CORSER NEW MEXICO 12236 REGISTERED PROFESSIONAL ENGINEER

PROFESSIONAL ENGINEER'S STATEMENT

I, Patrick G. Corser, state that this map was prepared under my supervision and all the information presented hereon is true and correct to the best of my knowledge and information.

11/5/98 Patrick G. Corser

Date Patrick G. Corser, NM P.E. 12236

Not For Construction

REV. No	REVISIONS	DATE	DESIGN BY	DRAWN BY	REVIEWED AND SIGNED BY
1	NOVEMBER 1998 REVISION	10/29/98	J.Pellicer	T.Smith	P.Corser
0	PART B PERMIT APPLICATION	12/12/97	PGC/JPP	K.Conrath	P.Corser

TRIASSIC PARK
WASTE DISPOSAL FACILITY

DRAWING TITLE:

TRAFFIC PLAN

TerraMatrix
MONTGOMERY WATSON
Mining Group

Sheet 2 Of 2 Sheets

SCALE: As Noted

DRAWING No. 26

AutoCAD FILE: GANDO_2.DWG PROJECT NUMBER: 602-0200

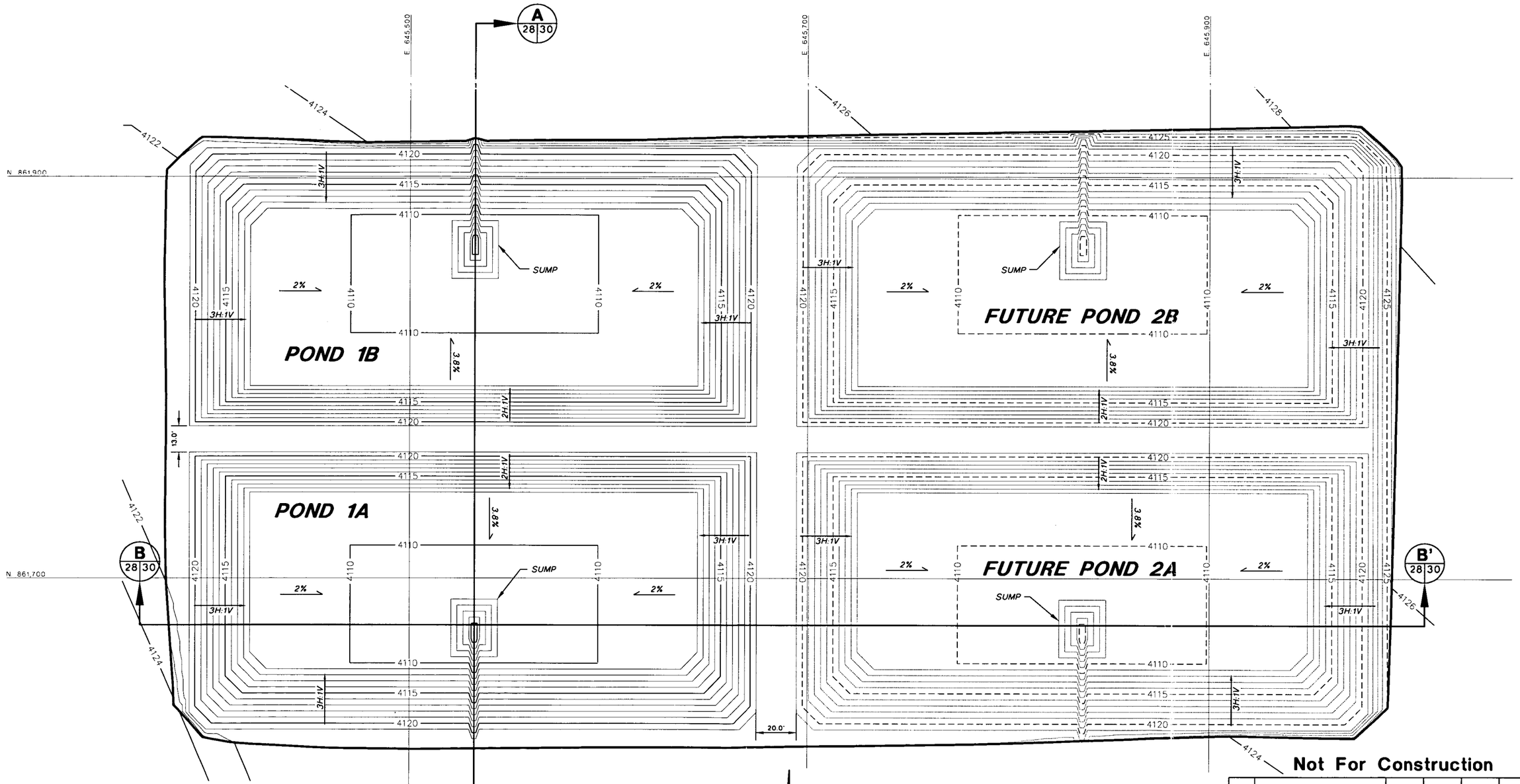

Not For Construction

REV No.	REVISIONS	DATE	DESIGN BY	DRAWN BY	REVIEWED AND SIGNED BY
0	PART B PERMIT APPLICATION	12/12/97	PGC/JPP	K.Conrath	P.Corser

TRIASSIC PARK
WASTE DISPOSAL FACILITY

DRAWING TITLE:
EVAPORATION POND SUBGRADE CONTOURS

NOTE:
FOR GENERAL NOTES AND LEGEND INFORMATION SEE DRAWING No. 2, "INDEX, LEGEND AND GENERAL NOTES".

SCALE

25' 0 25' 50'

CONTOUR INTERVAL 1 FT. – INSIDE OF POND
CONTOUR INTERVAL 2 FT. – OUTSIDE OF POND

PATRICK G. CORSER NEW MEXICO 12236 REGISTERED PROFESSIONAL ENGINEER

PROFESSIONAL ENGINEER'S STATEMENT

I, Patrick G. Corser, state that this map was prepared under my supervision and all the information presented hereon is true and correct to the best of my knowledge and information.

11/5/98 — *Patrick G. Corser, NM P.E. 12236*
Date

TerraMatrix
MONTGOMERY WATSON
Mining Group

Sheet 1 Of 1 Sheets
SCALE: As Shown
DRAWING No. 28

AutoCAD FILE: SUBGRD DWG PROJECT NUMBER: 602-0200

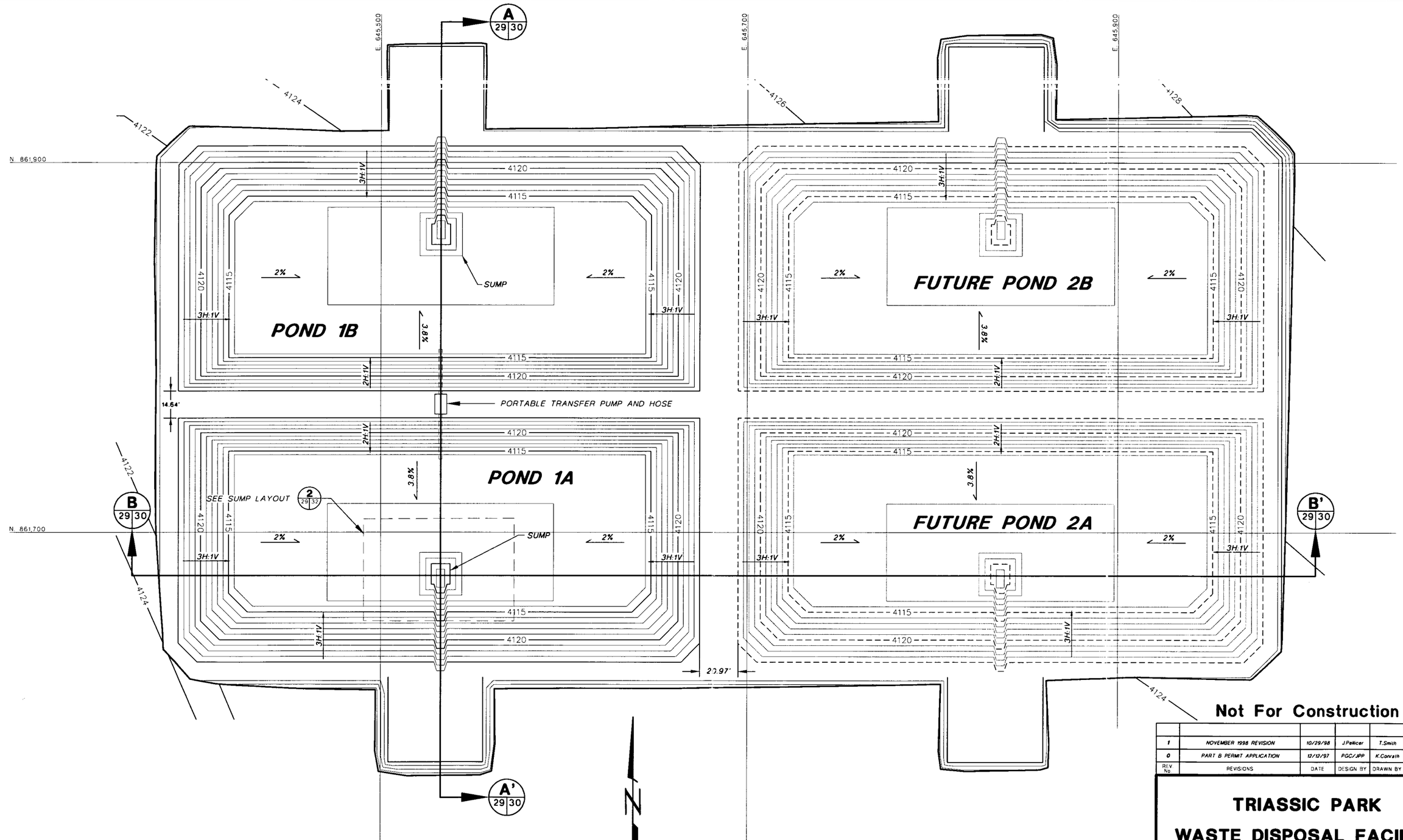

NOTE:
FOR GENERAL NOTES AND LEGEND INFORMATION SEE DRAWING No. 2, "INDEX, LEGEND AND GENERAL NOTES".

PROFESSIONAL ENGINEER'S STATEMENT

I, Patrick G. Corser, state that this map was prepared under my supervision and all the information presented hereon is true and correct to the best of my knowledge and information.

11/5/98 Patrick G. Corser
Date Patrick G. Corser, NM P.E. 12236

PATRICK G. CORSER NEW MEXICO 12236 REGISTERED PROFESSIONAL ENGINEER

Not For Construction

REV No.	REVISIONS	DATE	DESIGN BY	DRAWN BY	REVIEWED AND SIGNED BY
1	NOVEMBER 1998 REVISION	10/29/98	J.Pellicer	T.Smith	P.Corser
0	PART B PERMIT APPLICATION	12/12/97	PGC/JPP	K.Conrath	P.Corser

TRIASSIC PARK
WASTE DISPOSAL FACILITY

DRAWING TITLE:
EVAPORATION POND CLAY LINER CONTOURS

TerraMatrix
MONTGOMERY WATSON
Mining Group

Sheet 1 Of 1 Sheets
SCALE: As Shown
DRAWING No. 29

AutoCAD FILE: CLAY-C G PROJECT NUMBER: 602-0200

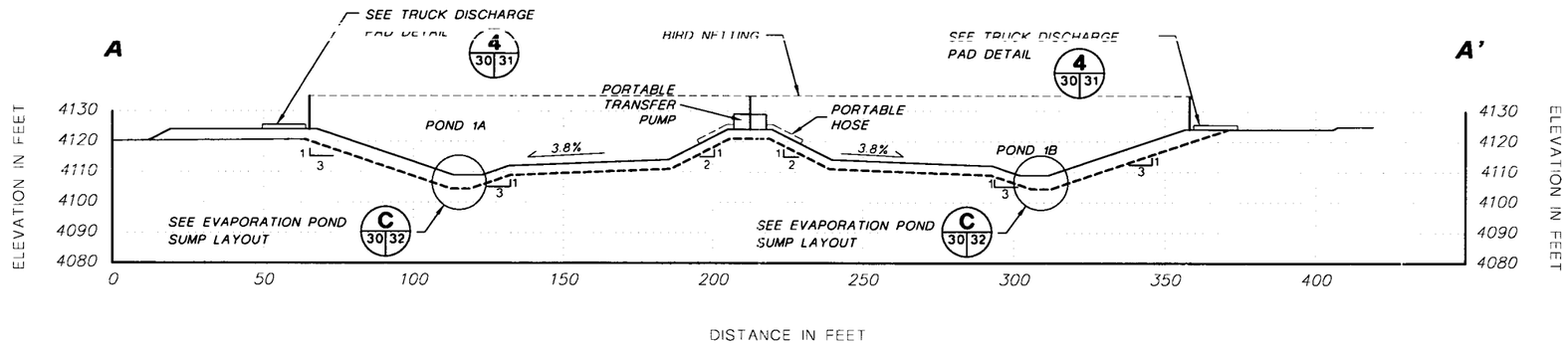

A A 28 30 29 30 CROSS-SECTION A-A'

HORIZONTAL SCALE
0 25' 50'

VERTICAL SCALE
0 25' 50'

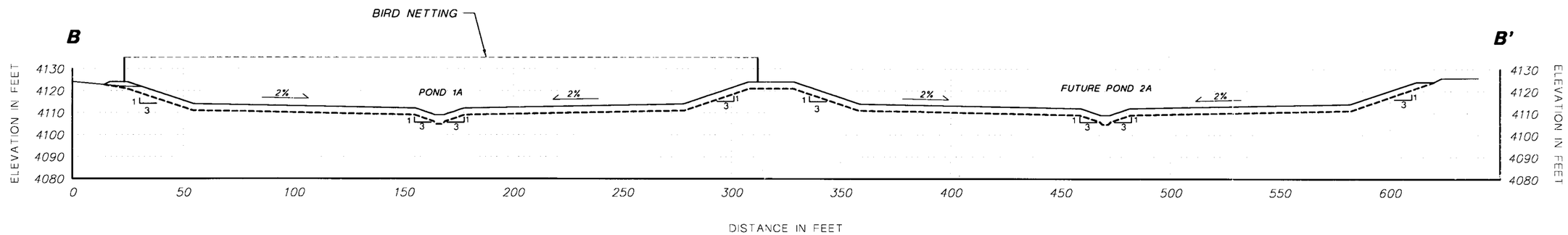

B B 28 30 29 30 CROSS-SECTION B-B'

HORIZONTAL SCALE
0 25' 50'

VERTICAL SCALE
0 25' 50'

NOTE:
FOR GENERAL NOTES AND LEGEND INFORMATION SEE DRAWING No. 2, "INDEX, LEGEND AND GENERAL NOTES".

PATRICK G. CORSER NEW MEXICO 12236 REGISTERED PROFESSIONAL ENGINEER

PROFESSIONAL ENGINEER'S STATEMENT

I, Patrick G. Corser, state that this map was prepared under my supervision and all the information presented hereon is true and correct, to the best of my knowledge and information.

11/5/98 — Date

Patrick G. Corser, NM P.E. 12236

Not For Construction

REV. No	REVISIONS	DATE	DESIGN BY	DRAWN BY	REVIEWED AND SIGNED BY
1	NOVEMBER 1998 REVISION	10/29/98	J.Pellicer	T.Smith	P.Corser
0	PART B PERMIT APPLICATION	12/12/97	PGC/JPP	K.Conrath	P.Corser

TRIASSIC PARK WASTE DISPOSAL FACILITY

DRAWING TITLE:
EVAPORATION POND CROSS SECTIONS

TerraMatrix
MONTGOMERY WATSON
Mining Group

Sheet 1 Of 1 Sheets
SCALE: As Shown
DRAWING No. 30

PROJECT NUMBER: 602-0200
AutoCAD FILE: EPSEC

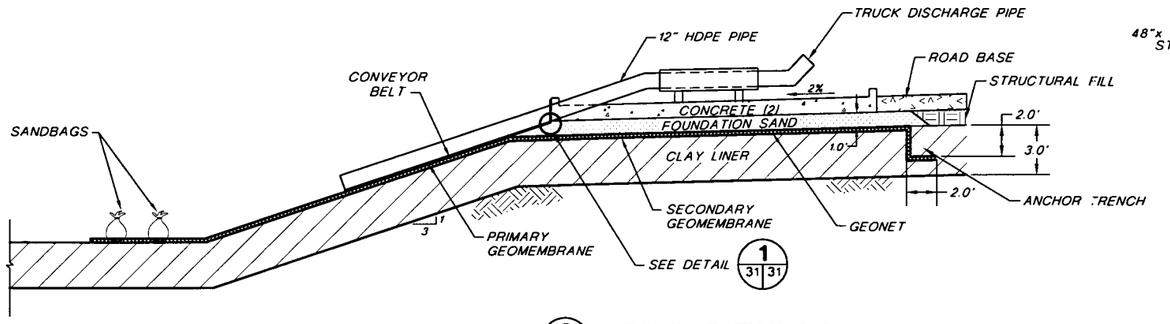

C 31 31 **CROSS-SECTION C-C'**
Not To Scale

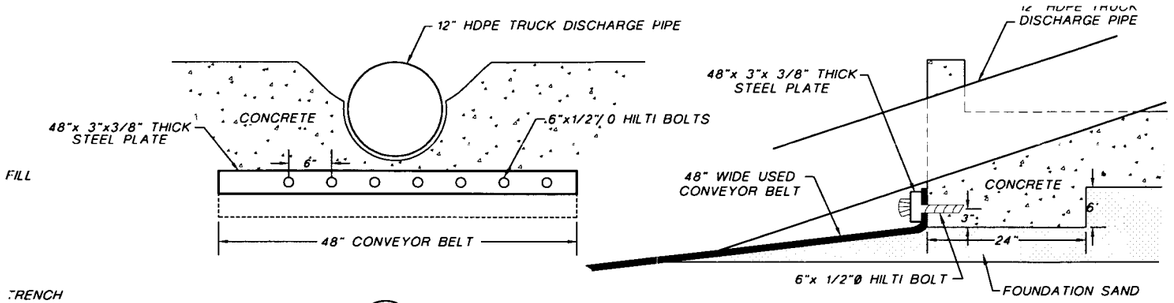

1 31 31 **DETAIL CONVEYOR BELT CONNECTION**
Not To Scale

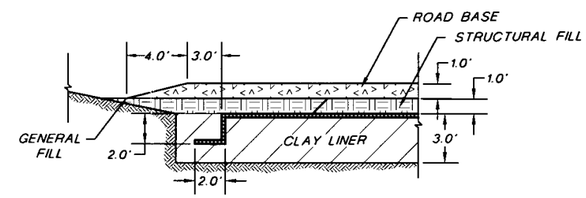

E 31 31 **CROSS-SECTION E-E' ACCESS RAMP**
Not To Scale

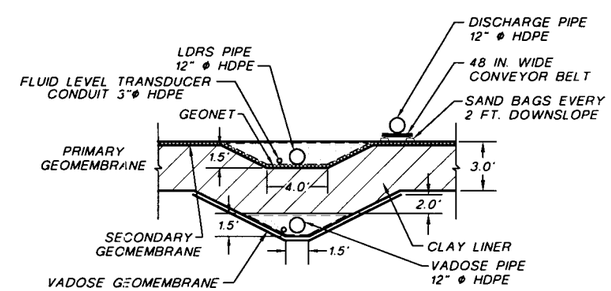

F 31 31 **CROSS-SECTION F-F' CONVEYOR BELT**
Not To Scale

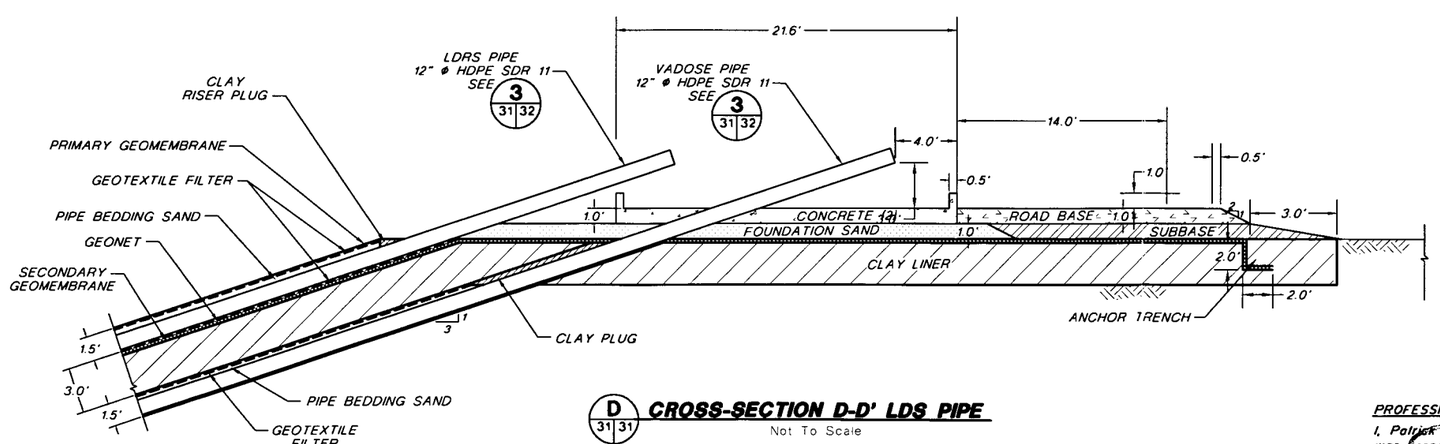

D 31 31 **CROSS-SECTION D-D' LDS PIPE**
Not To Scale

NOTES:
1. FOR GENERAL NOTES AND LEGEND INFORMATION SEE DRAWING No. 2, "INDEX, LEGEND AND GENERAL NOTES".
2. FOR CONCRETE DETAILS SEE DRAWING 45.

PROFESSIONAL ENGINEER'S STATEMENT

I, Patrick G. Corser, state that this map was prepared under my supervision and all the information presented hereon is true and correct to the best of my knowledge and information.

11/5/98 — Patrick G. Corser, NM P.E. 12236

PATRICK G. CORSER NEW MEXICO 12236 REGISTERED PROFESSIONAL ENGINEER

Not For Construction

REV No	REVISIONS	DATE	DESIGN BY	DRAWN BY	REVIEWED AND SIGNED BY
1	NOVEMBER 1998 REVISION	10/29/98	J.Pellicer	T.Smith	P.Corser
0	PART B PERMIT APPLICATION	12/13/97	PGC/JPP	K.Conrath	P.Corser

TRIASSIC PARK
WASTE DISPOSAL FACILITY

DRAWING TITLE:
EVAPORATION POND
TRUCK DISCHARGE STATION

TerraMatrix
MONTGOMERY WATSON
Mining Group

Sheet 2 Of 2 Sheets
SCALE: As Shown
DRAWING No. 31

PROJECT NUMBER: 602-0200
AutoCAD FILE: TANKPA

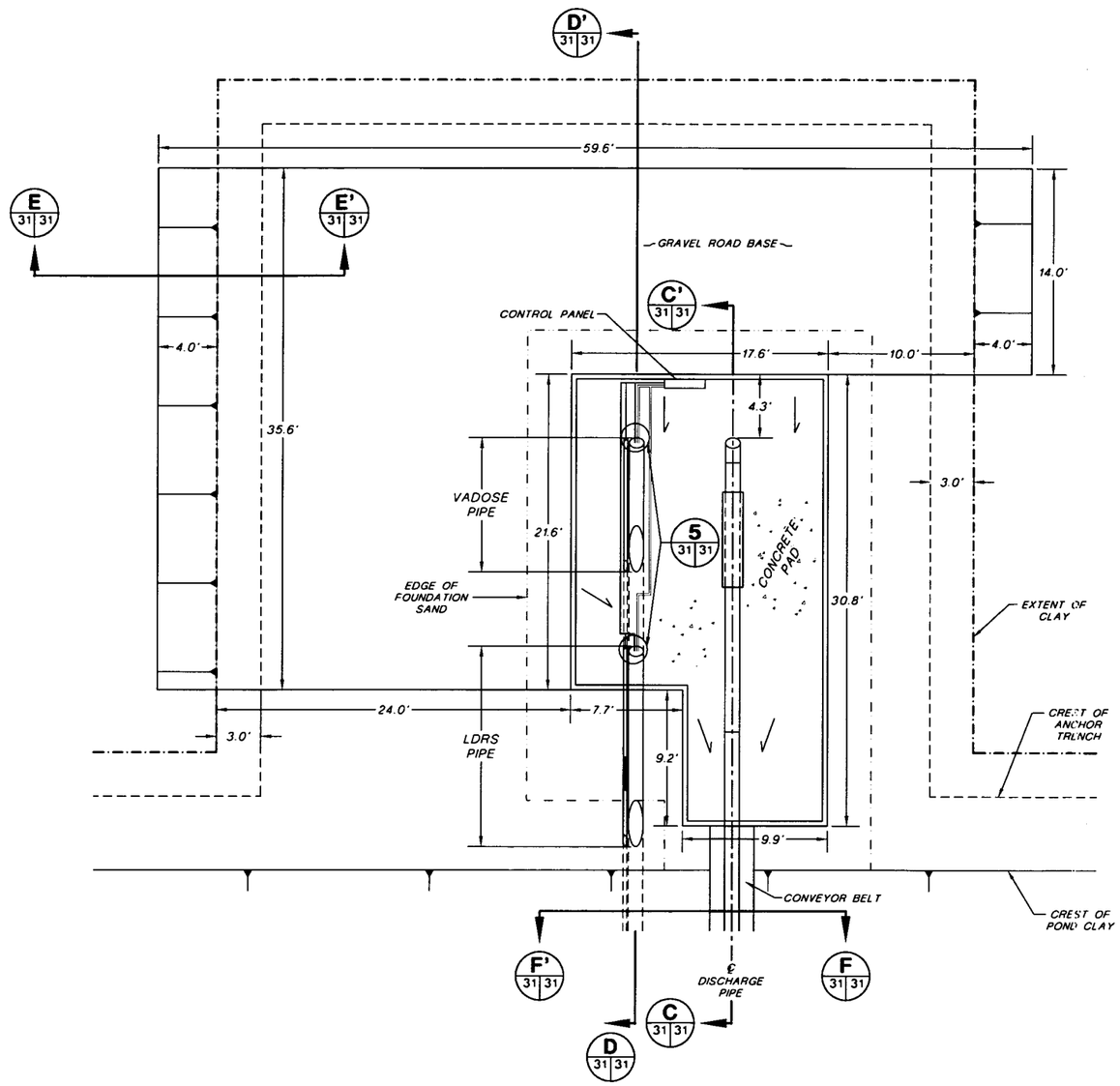

4 / 30 31 TRUCK DISCHARGE STATION LAYOUT

SCALE

5' 0 5' 10'

CONTOUR INTERVAL N.A.

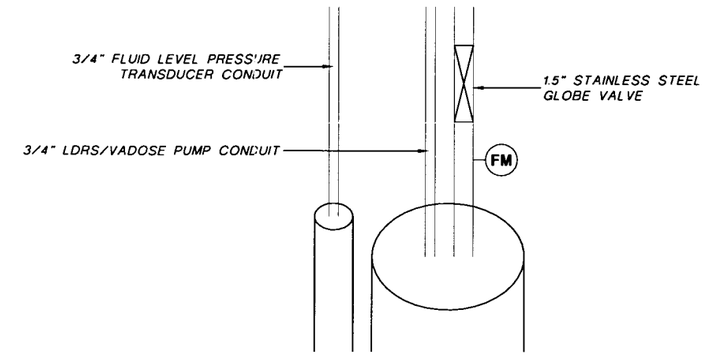

5 / 31 31 PIPE CONDUIT DETAIL

NOT TO SCALE

NOTES:
1. FOR GENERAL NOTES AND LEGEND INFORMATION SEE DRAWING No. 2, "INDEX, LEGEND AND GENERAL NOTES".
2. FOR CONCRETE DETAILS SEE DRAWING 45.

PROJECT NUMBER: 602-0220

AutoCAD FILE: TANKPA

PATRICK G. CORSER NEW MEXICO 12236 REGISTERED PROFESSIONAL ENGINEER

PROFESSIONAL ENGINEER'S STATEMENT

I, Patrick G. Corser, state that this map was prepared under my supervision and all the information presented hereon is true and correct to the best of my knowledge and information.

11/5/98 Date — Patrick G. Corser, NM P.E. 12236

Not For Construction

REV No	REVISIONS	DATE	DESIGN BY	DRAWN BY	REVIEWED AND SIGNED BY
1	NOVEMBER 1998 REVISION	10/29/98	J.Pallicar	T.Smith	P.Corser
0	PART B PERMIT	11/17/97	PGC/JKK/JP	K.Conrath	P.Corser

TRIASSIC PARK
WASTE DISPOSAL FACILITY

DRAWING TITLE:

EVAPORATION POND TRUCK DISCHARGE STATION

TerraMatrix
MONTGOMERY WATSON
Natural Resources Group

Sheet 1 Of 2 Sheets

SCALE: As Shown

DRAWING No. 31

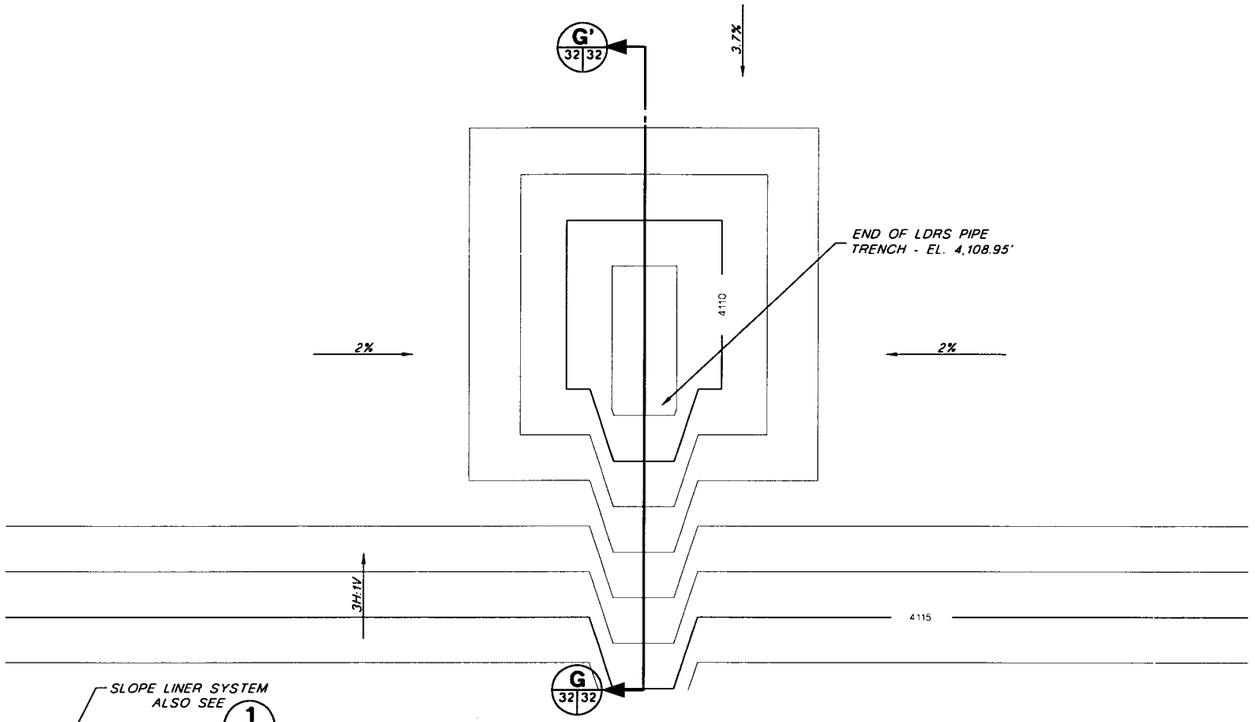

C 29 32 EVAPORATION POND SUMP LAYOUT

SCALE
0 5' 10'
Feet

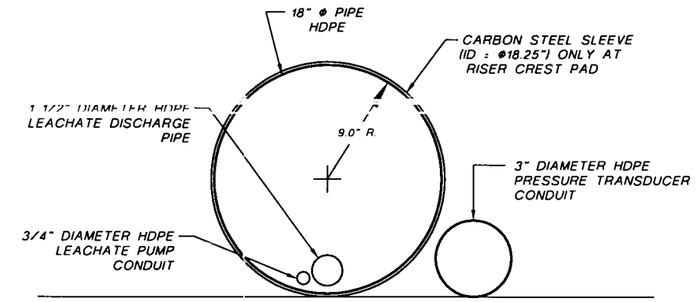

3 31 32 LCRS AND LDRS RISER PIPE DETAIL

SCALE
0 0.5' 1.0'
Feet

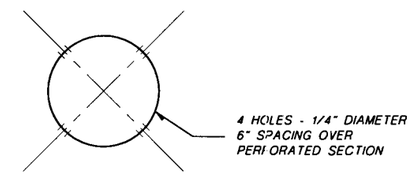

11 18 18 PIPE PERFORATION DETAIL

Not To Scale

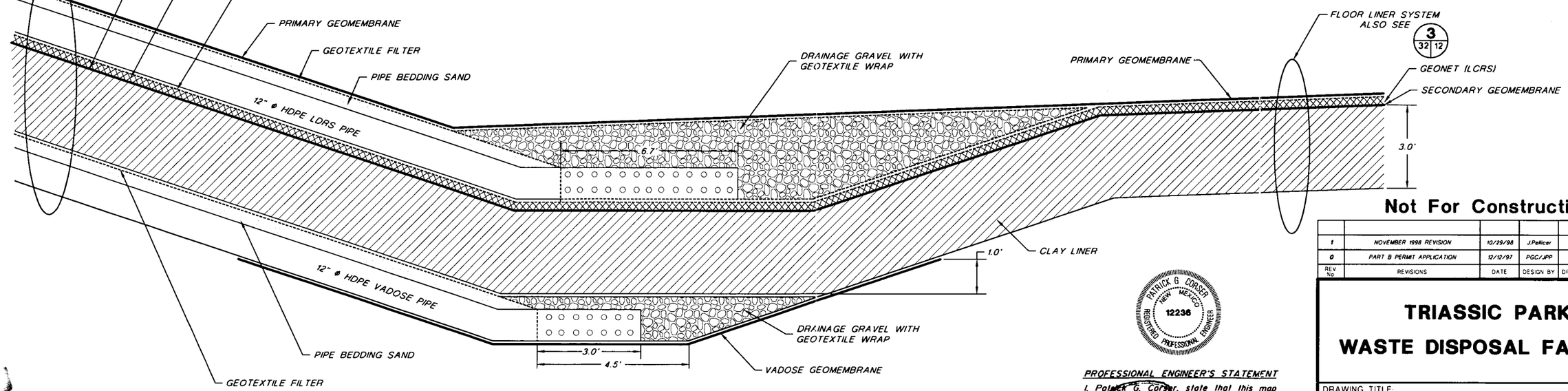

G 32 32 EVAPORATION POND SUMP CROSS-SECTION

Not To Scale

NOTE:
FOR GENERAL NOTES AND LEGEND INFORMATION SEE DRAWING No. 2, "INDEX, LEGEND AND GENERAL NOTES".

PROJECT NUMBER 602-0200

AutoCAD FILE LDSPLA

Not For Construction

REV No	REVISIONS	DATE	DESIGN BY	DRAWN BY	REVIEWED AND SIGNED BY
1	NOVEMBER 1998 REVISION	10/29/98	J.Pellicer	T.Smith	P.Corser
0	PART B PERMIT APPLICATION	12/12/97	PGC/JPP	T.Smith	P.Corser

PATRICK G. CORSER
NEW MEXICO
12236
REGISTERED PROFESSIONAL ENGINEER

PROFESSIONAL ENGINEER'S STATEMENT

I, Patrick G. Corser, state that this map was prepared under my supervision and all the information presented hereon is true and correct to the best of my knowledge and information.

11/5/98 — Patrick Corser
Date — Patrick G. Corser, NM P.E. 12236

TRIASSIC PARK
WASTE DISPOSAL FACILITY

DRAWING TITLE:
EVAPORATION POND LDRS AND VADOSE PLAN AND DETAILS

TerraMatrix
MONTGOMERY WATSON
Mining Group

Sheet 1 Of 1 Sheets
SCALE: As Shown
DRAWING No. 32

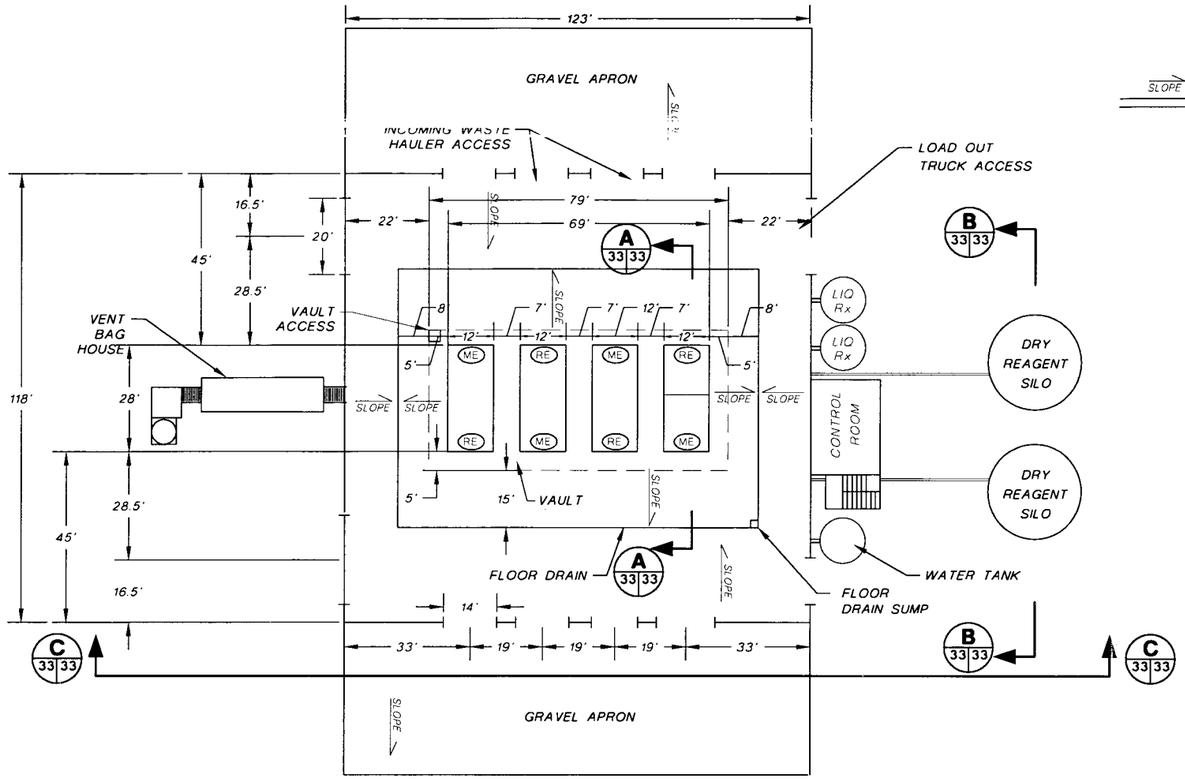

STABILIZATION BUILDING FLOOR PLAN

SCALE 20' 0 20' 40'

LEGEND

(RE) RECEIVING END
(ME) MIXING END

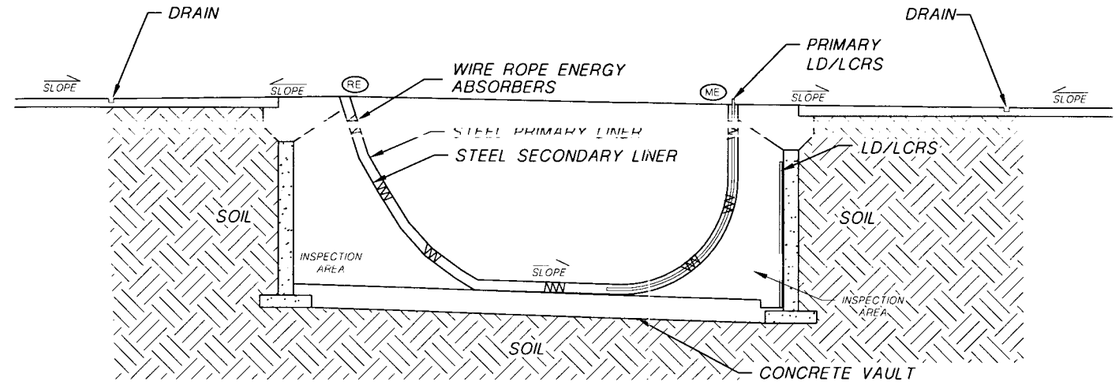

A 33 33 TYPICAL BIN & VAULT SECTION

SCALE 5' 0 5' 10'

NOTE:
SEE DRAWING 35 FOR BIN DETAILS

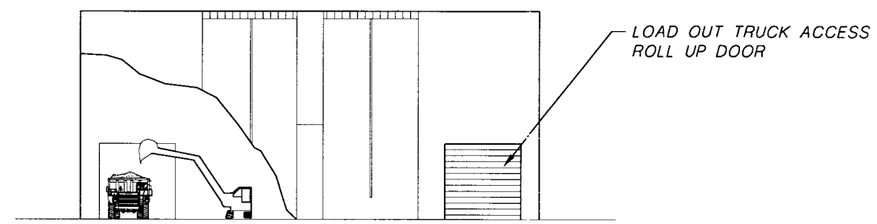

B 33 33 TYPICAL END ELEVATION

Not To Scale

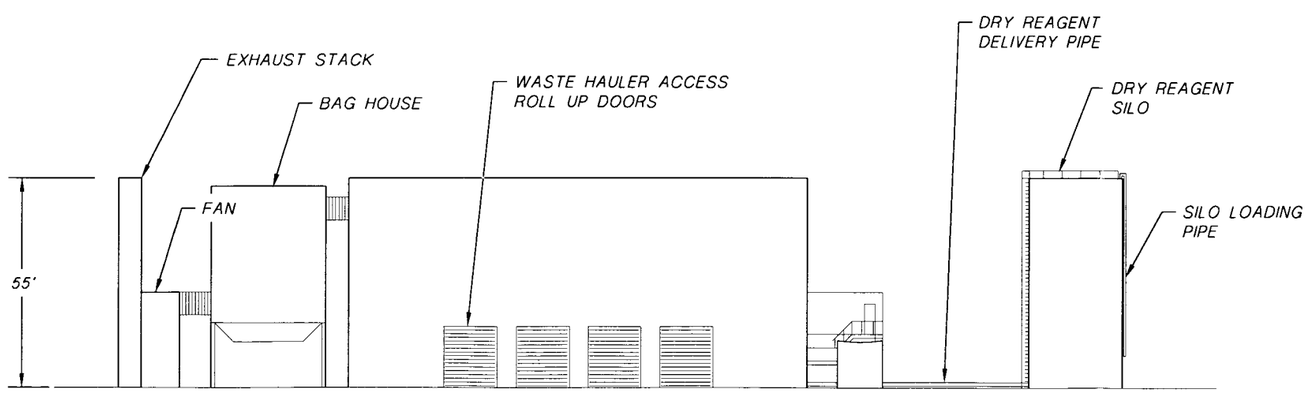

C 33 33 TYPICAL FRONT ELEVATION

Not To Scale

NOTE:
FOR GENERAL NOTES AND LEGEND INFORMATION SEE DRAWING No. 2, "INDEX, LEGEND AND GENERAL NOTES".

PATRICK G. CORSER NEW MEXICO 12236 REGISTERED PROFESSIONAL ENGINEER

PROFESSIONAL ENGINEER'S STATEMENT

I, Patrick G. Corser, state that this map was prepared under my supervision and all the information presented hereon is true and correct to the best of my knowledge and information.

11/5/98 Patrick Corser
Date Patrick G. Corser, NM P.E. 12236

Not For Construction

REV. No	REVISIONS	DATE	DESIGN BY	DRAWN BY	REVIEWED AND SIGNED BY
1	NOVEMBER 1998 REVISION	10/29/98	J.Pellicer	T.Smith	P.Corser
0	PART B PERMIT APPLICATION	12/12/97	PGC/JPP	K.Conrath	P.Corser

TRIASSIC PARK
WASTE DISPOSAL FACILITY

DRAWING TITLE:
STABILIZATION UNIT GENERAL ARRANGEMENT

TerraMatrix
MONTGOMERY WATSON
Mining Group

Sheet 1 Of 1 Sheets
SCALE: As Shown
DRAWING No. 33

PROJECT NUMBER 602-0200
AutoCAD FILE: CONCS

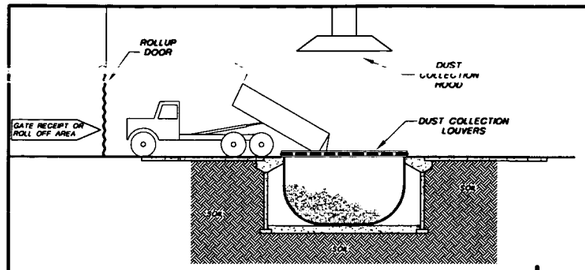

- STAGE TRUCK
- DUST COLLECTION SYSTEM ON
- DUMP WASTE LOAD INTO BIN
- EVACUATE DUST
- WASH OUT ROLLOFF BED

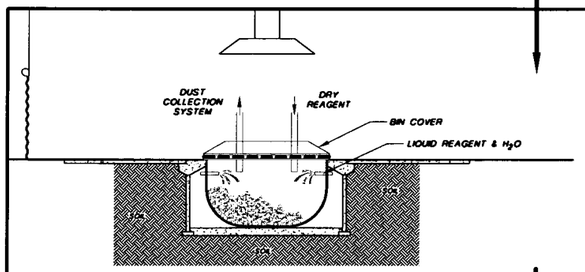

REAGENT ADDITION

- PLACE BIN COVER
- CONNECT DRY REGENT AND DUST COLLECTION DUCTS
- DELIVER DRY/WET REGENT
- EVACUATE DUST
- REMOVE BIN COVER

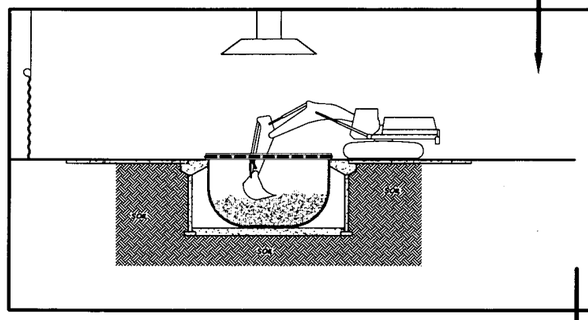

STABILIZATION MIXING

- DUST COLLECTION SYSTEM ON
- POSITION BACKHOE MIXER
- MIX/STABILIZE WASTE
- SAMPLE/PAINT FILTER TEST

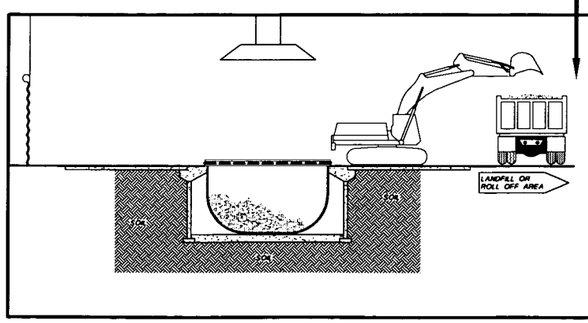

STABILIZED WASTE LOADOUT

- POSITION ROLL-OFF TRUCK
- DUST COLLECTION SYSTEM ON
- LOAD OUT STABILIZED WASTE
- SAMPLE/TCLP TEST
- PLACE TRUCK COVER
- TRUCK TO ROLL OFF AREA OR LANDFILL

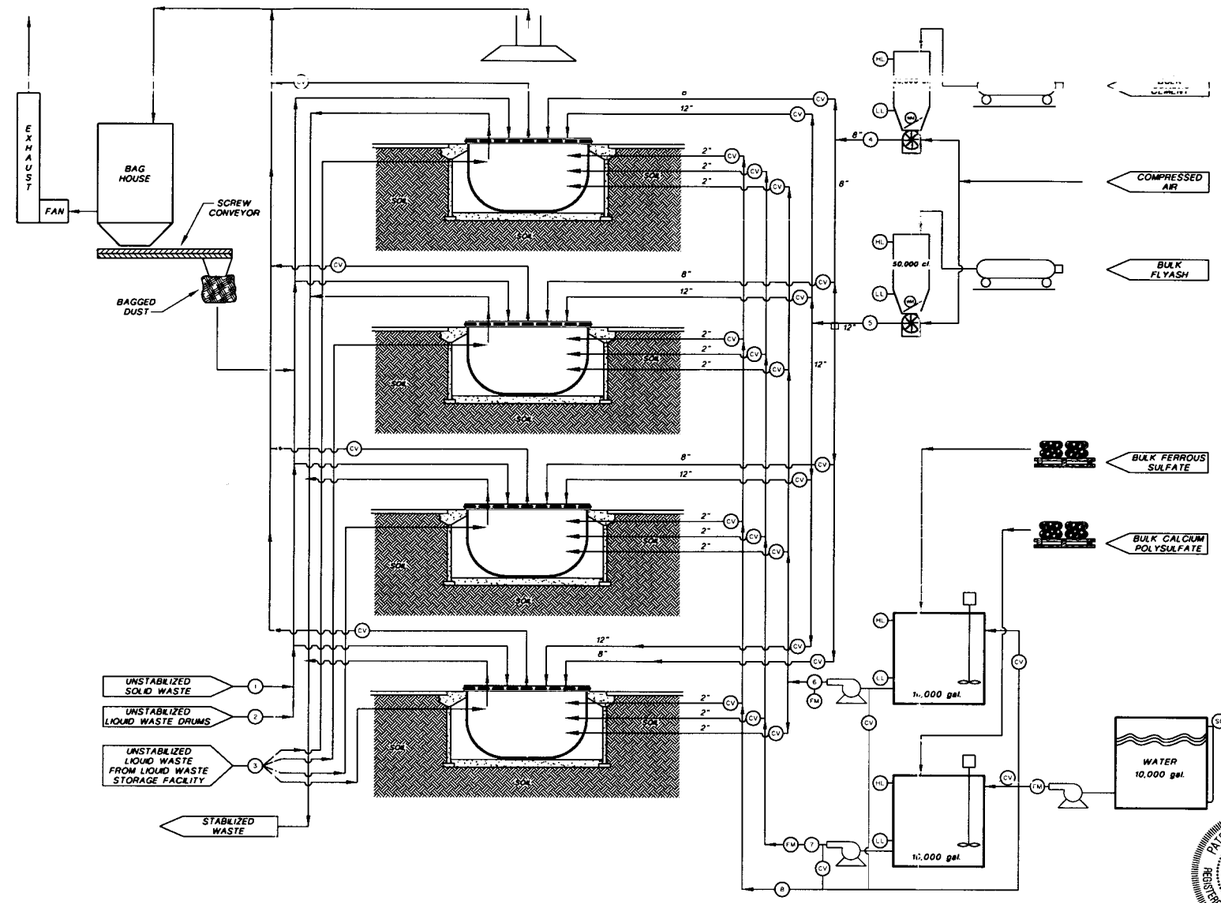

LEGEND

- HLC — HIGH LEVEL CUT-OFF
- LLC — LOW LEVEL CUT OFF
- WM — WEIGHT METER
- FM — FLOW METER
- CV — CONTROL VALVE
- SG — SIGHT GAUGE

PATRICK G. CORSER NEW MEXICO 12236 REGISTERED PROFESSIONAL ENGINEER

PROFESSIONAL ENGINEER'S STATEMENT

I, Patrick G. Corser, state that this map was prepared under my supervision and all the information presented herein is true and correct to the best of my knowledge and information.

11/5/98 — Patrick G. Corser, NM P.E. 12236
Date

Not For Construction

TYPICAL MASS BALANCE SCHEDULE		TYPICAL REAGENT: WASTE RATIOS
WASTE FLOW		
SOLIDS	(TPD)	
LIQUID	(GPD)	
SOLID REAGENT FLOW		
REAGENT 1	(TPD)	1.3l:1l Solid Waste, 50lb:1 gal Liquid Waste
REAGENT 2	(TPD)	2l:1l Solid Waste, 35lb:1 gal Liquid Waste
LIQUID REAGENT FLOW		
CALCIUM POLYSULFIDE	(GPD)	2 gal:1l Solid Waste, 0.004 gal:gal Liquid Waste
FERROUS SULFATE	(GPD)	1.5 gal:1l Solid Waste, 0.0004 gal:gal Liquid Waste
WATER	(GPD)	1.5 gal:1l Solid Waste
STABLIZED WASTE	(TPD)	approximate

NOTES:
1) FOR GENERAL NOTES AND LEGEND INFORMATION SEE DRAWING No. 2, "INDEX, LEGEND AND GENERAL NOTES".
2) ACTUAL REAGENT: WASTE RATIOS ARE DEPENDENT ON SPECIFIC CHARACTERISTIC OF WASTE.

REV. No.	REVISIONS	DATE	DESIGN BY	DRAWN BY	REVIEWED AND SIGNED BY
1	NOVEMBER 1998 REVISION	10/29/98	J.Pellicer	T.Smith	P.Corser
0	PART B PERMIT APPLICATION	12/12/97	PGC/JPP	K.Conrath	P.Corser

TRIASSIC PARK
WASTE DISPOSAL FACILITY

DRAWING TITLE:
STABILIZATION UNIT WASTE FLOW DIAGRAM

TerraMatrix
MONTGOMERY WATSON
Mining Group

Sheet 1 Of 1 Sheets
SCALE: As Shown
DRAWING No. 34

PROJECT NUMBER: 602-0200
AutoCAD FILE: GM-FLO

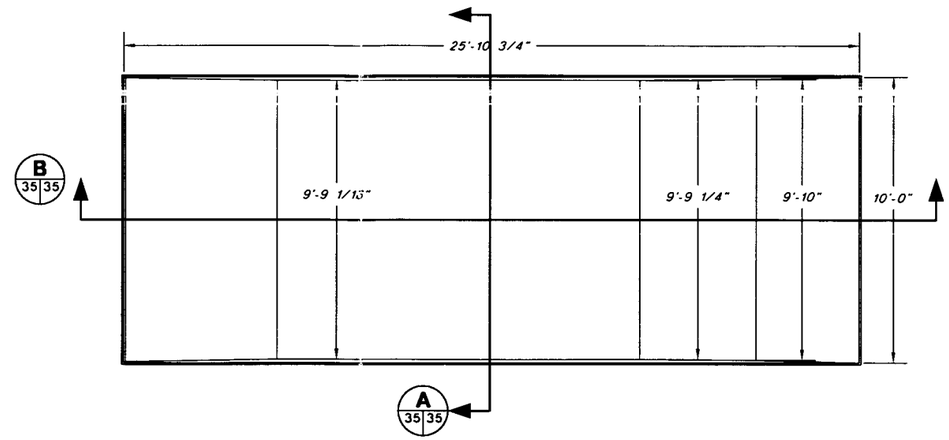

PLAN VIEW - INNER LINER

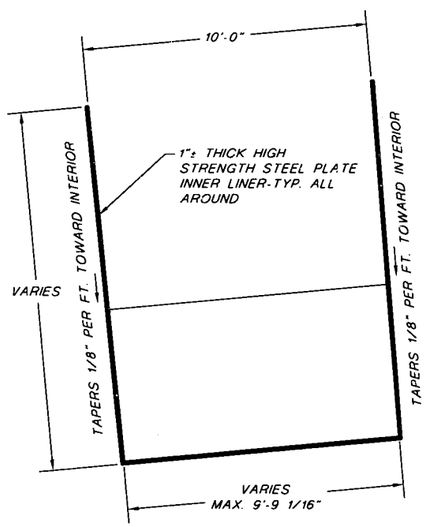

A 35 35 CROSS SECTION - INNER LINER

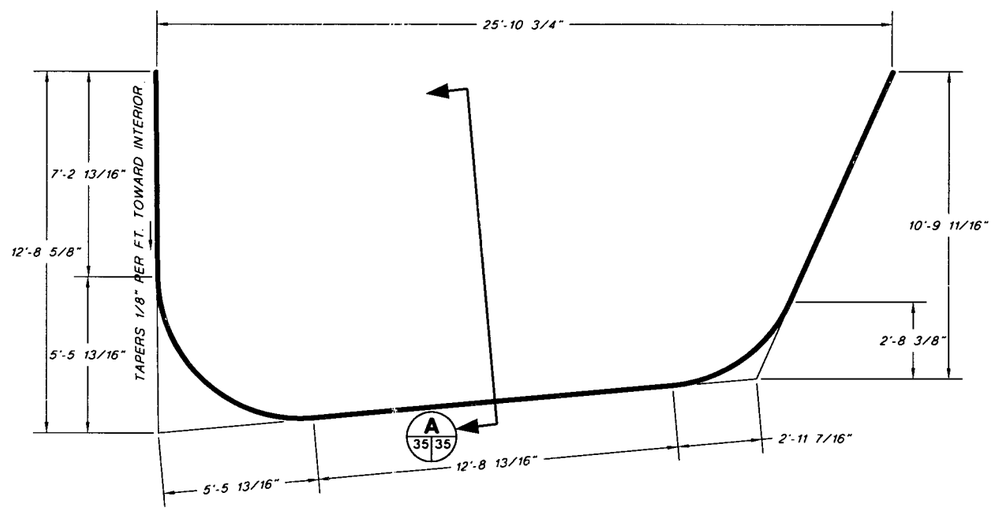

B 35 35 LONGITUDINAL SECTION - INNER LINER

SCALE

4' 0 2' 4' 6'

REV. No	REVISIONS	DATE	DESIGN BY	DRAWN BY	REVIEWED AND SIGNED BY
1	NOVEMBER 1998 REVISION	10/29/98	J.Pellicer	T.Smith	P.Corser
0	PART B PERMIT APPLICATION	12/12/97	PGC/JPP	K.Conrath	P.Corser

TRIASSIC PARK
WASTE DISPOSAL FACILITY

DRAWING TITLE:

STABILIZATION UNIT BIN DESIGN

TerraMatrix
MONTGOMERY WATSON
Mining Group

Sheet 1 Of 1 Sheets

SCALE: As Shown

DRAWING No. 35

FRED H. SCHOTT & ASSOCIATES
CIVIL and STRUCTURAL ENGINEERING • LAND PLANNING & BUILDING DESIGN
200 Suburban Road, Suite A San Luis Obispo, CA 93401
(805) 544-1216 FAX (805) 544-2004

The plans, specifications, ideas and designs incorporated herein, are instruments of service prepared for the construction of the work shown hereon and are the property of Fred H. Schott & Associates and shall not be used in whole or in part for any other project without authority of Fred H. Schott & Associates

© Fred H. Schott & Associates

PROJECT NUMBER: 602-0200

AutoCAD FILE: GM-BIN1

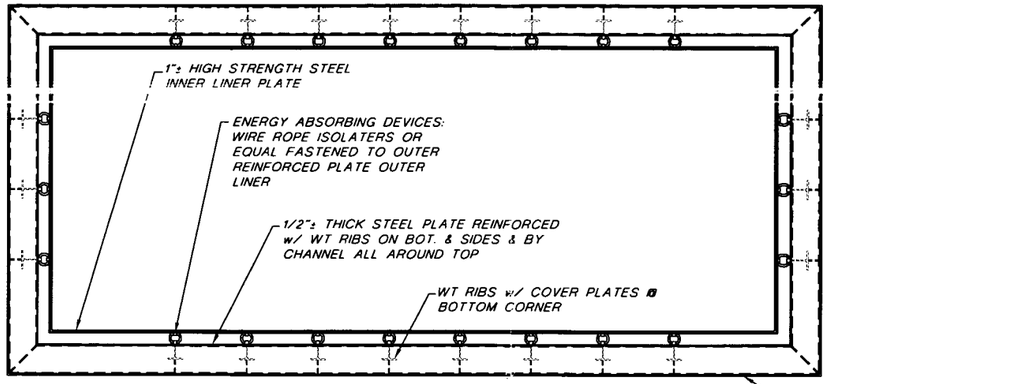

TOP VIEW

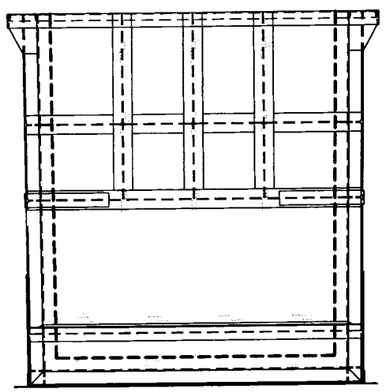

LEFT SIDE ELEVATION

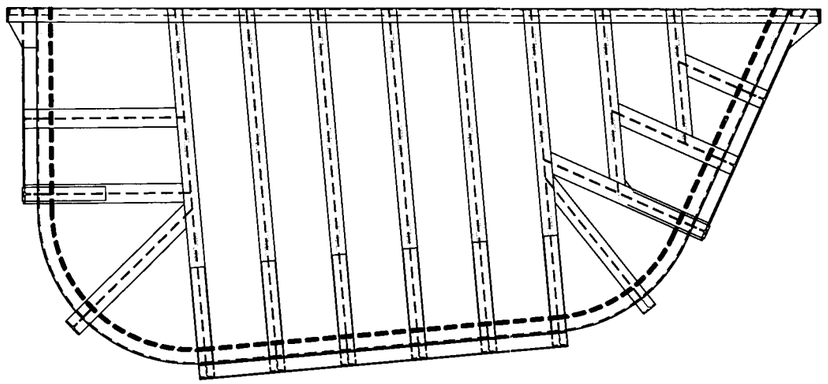

TYPICAL SIDE ELEVATION

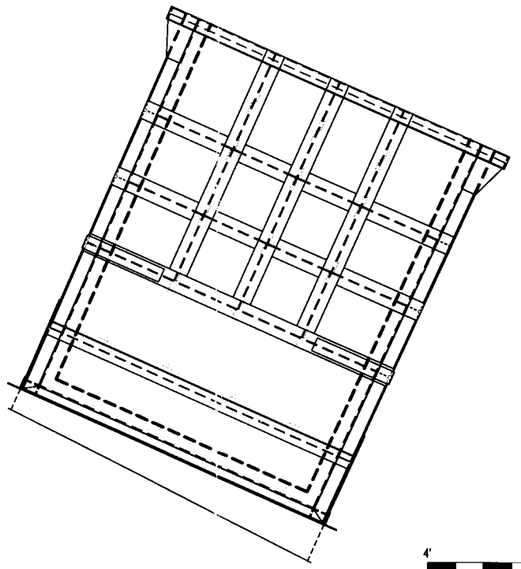

RIGHT SIDE ELEVATION

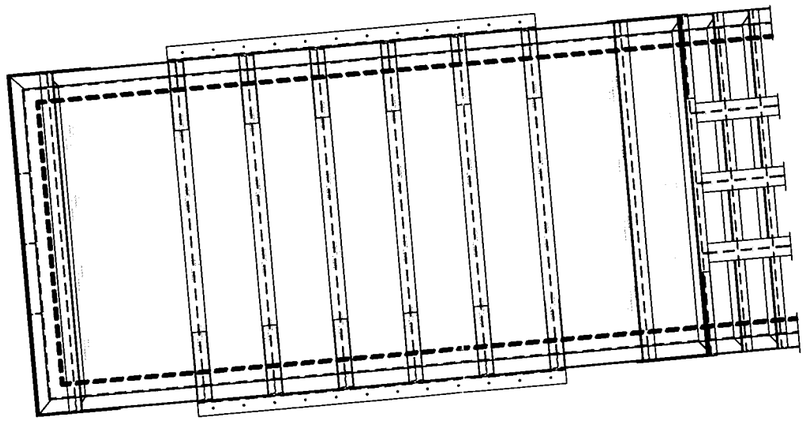

VIEW OF BOTTOM

SCALE

4' 0 2' 4' 6'

REV. No.	REVISIONS	DATE	DESIGN BY	DRAWN BY	REVIEWED AND SIGNED BY
1	NOVEMBER 1998 REVISION	10/29/98	J.Pelicer	T.Smith	P.Corser
0	PART B PERMIT APPLICATION	12/12/97	PGC/JPP	K.Conrath	P.Corser

TRIASSIC PARK
WASTE DISPOSAL FACILITY

DRAWING TITLE:

STABILIZATION UNIT
BIN DESIGN DETAILS

FRED H. SCHOTT & ASSOCIATES
CIVIL and STRUCTURAL ENGINEERING • LAND PLANNING & BUILDING DESIGN
200 Suburban Road, Suite A San Luis Obispo, CA 93401
(805) 544-1216 FAX (805) 544-2004

The plans, specifications, ideas and designs incorporated herein, are instruments of service prepared for the construction of the work shown hereon and are the property of Fred H. Schott & Associates and shall not be used in whole or in part for any other project without authority of Fred H. Schott & Associates
© Fred H. Schott & Associates

TerraMatrix
MONTGOMERY WATSON
Mining Group

Sheet 1 Of 2 Sheets

SCALE: As Shown

DRAWING No. 36

AutoCAD FILE: GM-BIN2.DWG PROJECT NUMBER: 602-0200

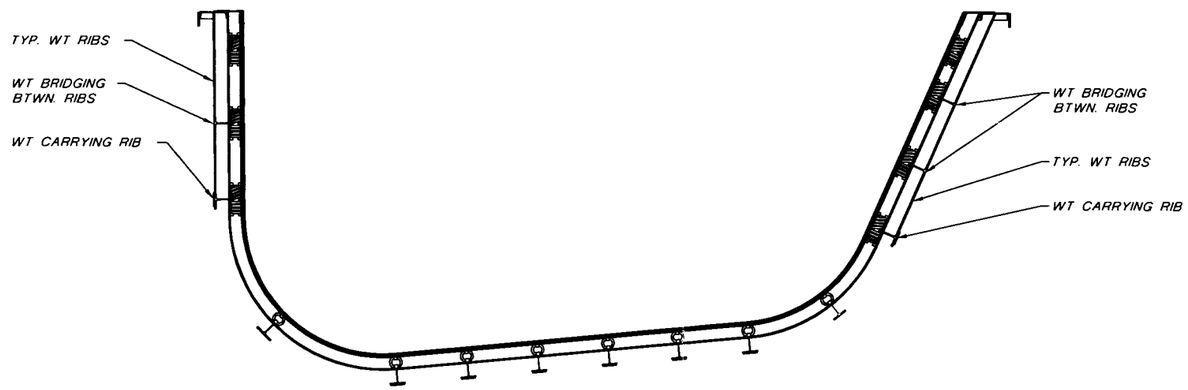

LONGITUDINAL SECTION - INNER/OUTER LINERS & FRAMING

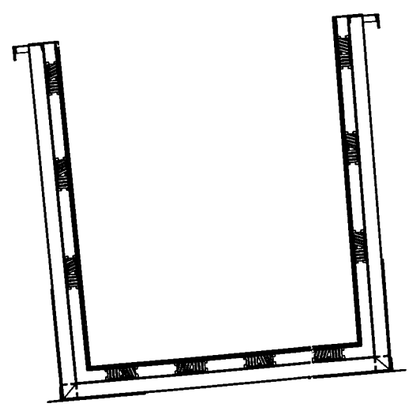

LATTERAL SECTION - INNER/OUTER LINERS & FRAMING

SCALE

4' 0 2' 4' 6'

REV. No	REVISIONS	DATE	DESIGN BY	DRAWN BY	REVIEWED AND SIGNED BY
1	NOVEMBER 1998 REVISION	10/29/98	J.Pellicer	T.Smith	P.Corser
0	PART B PERMIT APPLICATION	12/12/97	PGC/JPP	K.Conrath	P.Corser

TRIASSIC PARK WASTE DISPOSAL FACILITY

DRAWING TITLE:

STABILIZATION UNIT BIN DESIGN DETAILS

FRED H. SCHOTT & ASSOCIATES
CIVIL and STRUCTURAL ENGINEERING • LAND PLANNING & BUILDING DESIGN
200 Suburban Road, Suite A San Luis Obispo, CA 93401
(805) 544-1216 FAX (805) 544-2004

The plans, specifications, ideas and designs incorporated herein, are instruments of service prepared for the construction of the work shown hereon and are the property of Fred H. Schott & Associates and shall not be used in whole or in part for any other project without authority of Fred H. Schott & Associates

© Fred H. Schott & Associates

TerraMatrix
MONTGOMERY WATSON
Mining Group

Sheet 2 Of 2 Sheets

SCALE: As Shown

DRAWING No. 36

AutoCAD FILE: GM-BIN3.DWG PROJECT NUMBER: 602.0200

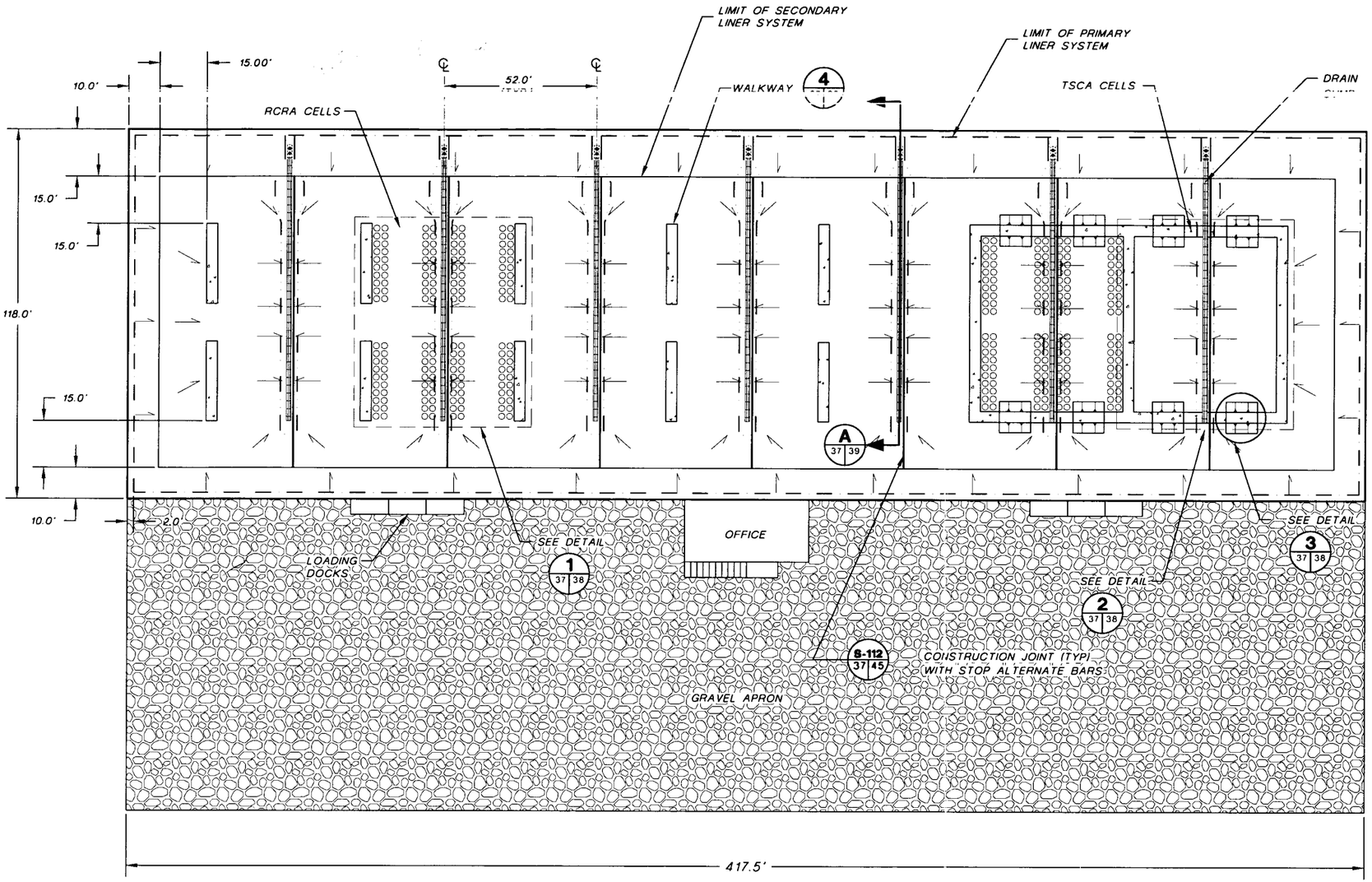

TYPICAL DRUM FLOOR LAYOUT

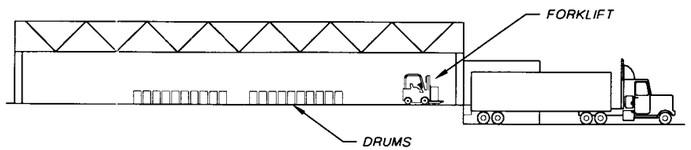

TYPICAL SIDE ELEVATION

LEGEND

- DRAINAGE FLOW DIRECTION ON TOP OF CONCRETE
- EXTENT OF PRIMARY GEOMEMBRANE
- EXTENT OF SECONDARY GEOMEMBRANE
- DRUMS

SCALE

20' 0 20' 40'

PATRICK G. CORSER NEW MEXICO 12236 REGISTERED PROFESSIONAL ENGINEER

PROFESSIONAL ENGINEER'S STATEMENT

I, Patrick G. Corser, state that this map was prepared under my supervision and all the information presented hereon is true and correct to the best of my knowledge and information.

11/5/98 Patrick G. Corser
Date Patrick G. Corser, NM P.E. 12236

Not For Construction

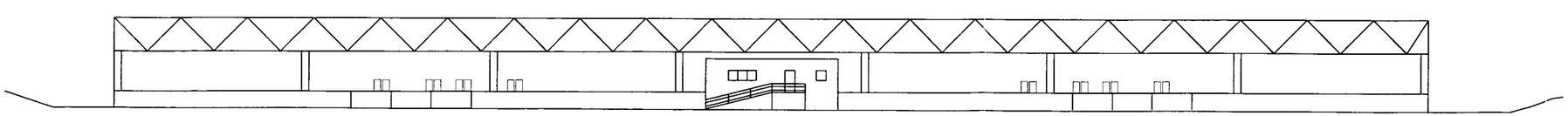

TYPICAL FRONT ELEVATION

NOTE:
FOR GENERAL NOTES AND LEGEND INFORMATION SEE DRAWING No. 2, "INDEX, LEGEND AND GENERAL NOTES".

REV. No	REVISIONS	DATE	DESIGN BY	DRAWN BY	REVIEWED AND SIGNED BY
1	NOVEMBER 1998 REVISION	10/30/98	J.Pellicer	T.Smith	P.Corser
0	PART B PERMIT APPLICATION	12/12/97	PGC/JPP	K.Conrath	P.Corser

TRIASSIC PARK
WASTE DISPOSAL FACILITY

DRAWING TITLE:
DRUM HANDLING UNIT GENERAL ARRANGEMENT

TerraMatrix
MONTGOMERY WATSON
Mining Group

Sheet 1 Of 1 Sheets
SCALE: As Shown
DRAWING No. 37

PROJECT NUMBER 602-0200
AutoCAD FILE GM-DHU

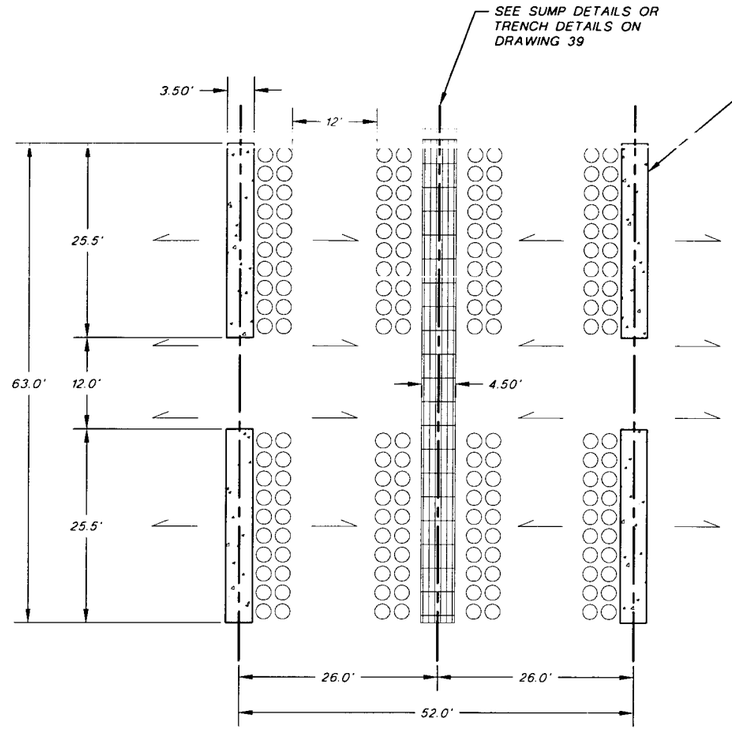

1 37|38 **TYPICAL RCRA CELL DETAIL**
Not To Scale

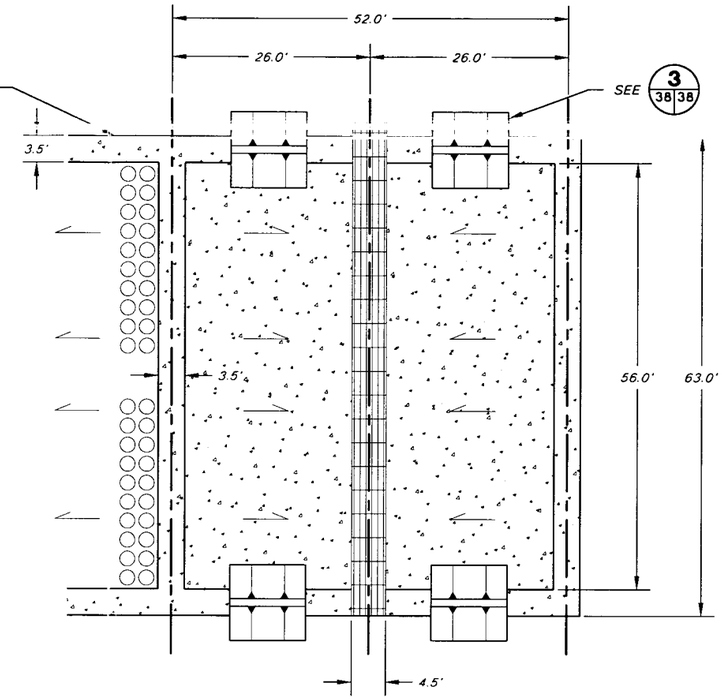

2 37|38 **TYPICAL TSCA CELL DETAIL**
Not To Scale

LEGEND

DRAINAGE FLOW DIRECTION ON TOP OF CONCRETE

CENTERLINE

DRUMS

SCALE
10' 0 10' 20'

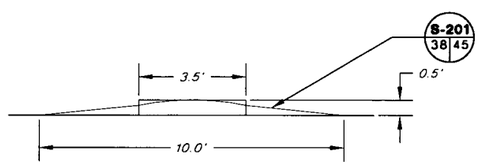

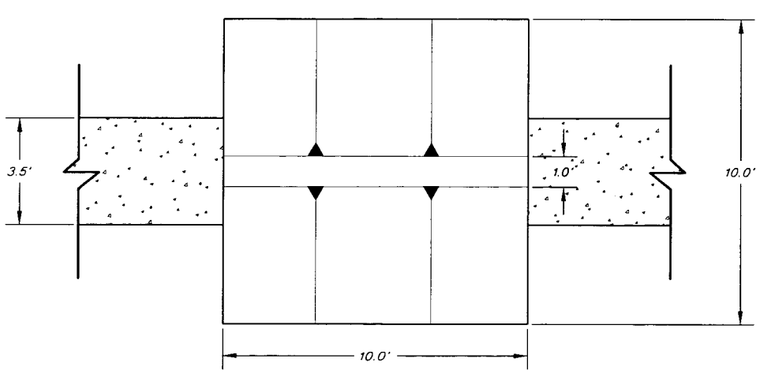

3 37|38 **TYPICAL TSCA CELL ACCESS RAMP DETAIL**
Not To Scale

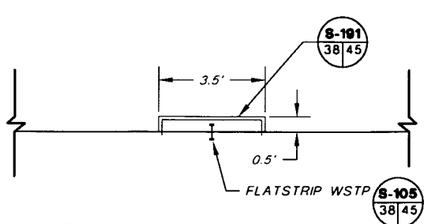

4 37|38 **TYPICAL WALKWAY DETAIL**
Not To Scale

PATRICK G. CORSER
NEW MEXICO
12236
REGISTERED PROFESSIONAL ENGINEER

PROFESSIONAL ENGINEER'S STATEMENT

I, Patrick G. Corser, state that this map was prepared under my supervision and all the information presented hereon is true and correct to the best of my knowledge and information.

11/5/98 — Date

Patrick G. Corser, NM P.E. 12236

Not For Construction

REV. No	REVISIONS	DATE	DESIGN BY	DRAWN BY	REVIEWED AND SIGNED BY
1	NOVEMBER 1998 REVISION	10/30/98	J.Pelicer	T.Smith	P.Corser
0	PART B PERMIT APPLICATION	12/12/97	PGC/JPP	K.Conrath	P.Corser

TRIASSIC PARK
WASTE DISPOSAL FACILITY

DRAWING TITLE:
DRUM HANDLING UNIT DETAILS

TerraMatrix
MONTGOMERY WATSON
Mining Group

Sheet 1 Of 1 Sheets
SCALE: As Shown
DRAWING No. 38

NOTE:
FOR GENERAL NOTES AND LEGEND INFORMATION SEE DRAWING No. 2, "INDEX, LEGEND AND GENERAL NOTES".

PROJECT NUMBER: 602-0200
AutoCAD FILE: GMI.DWG

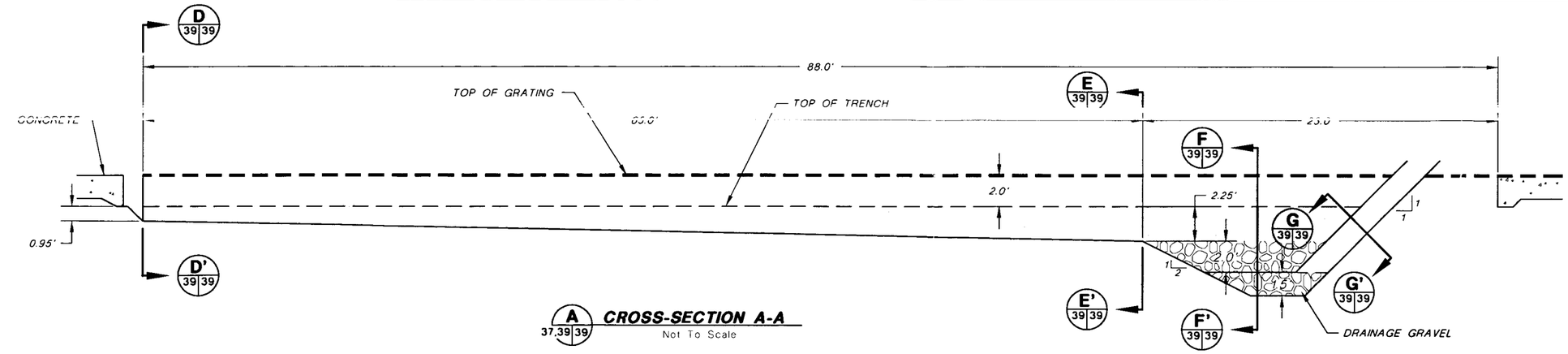

A 37|39|39 CROSS-SECTION A-A
Not To Scale

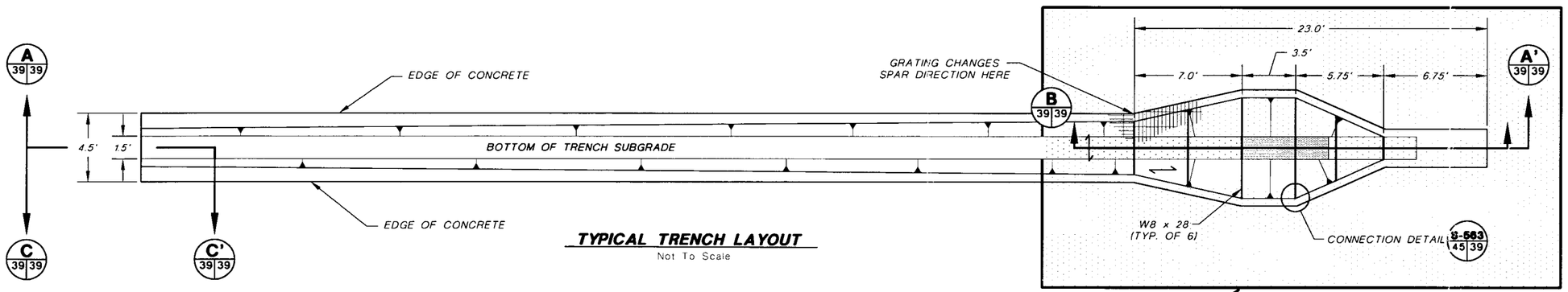

TYPICAL TRENCH LAYOUT
Not To Scale

SCALE
4' 0 4' 8'

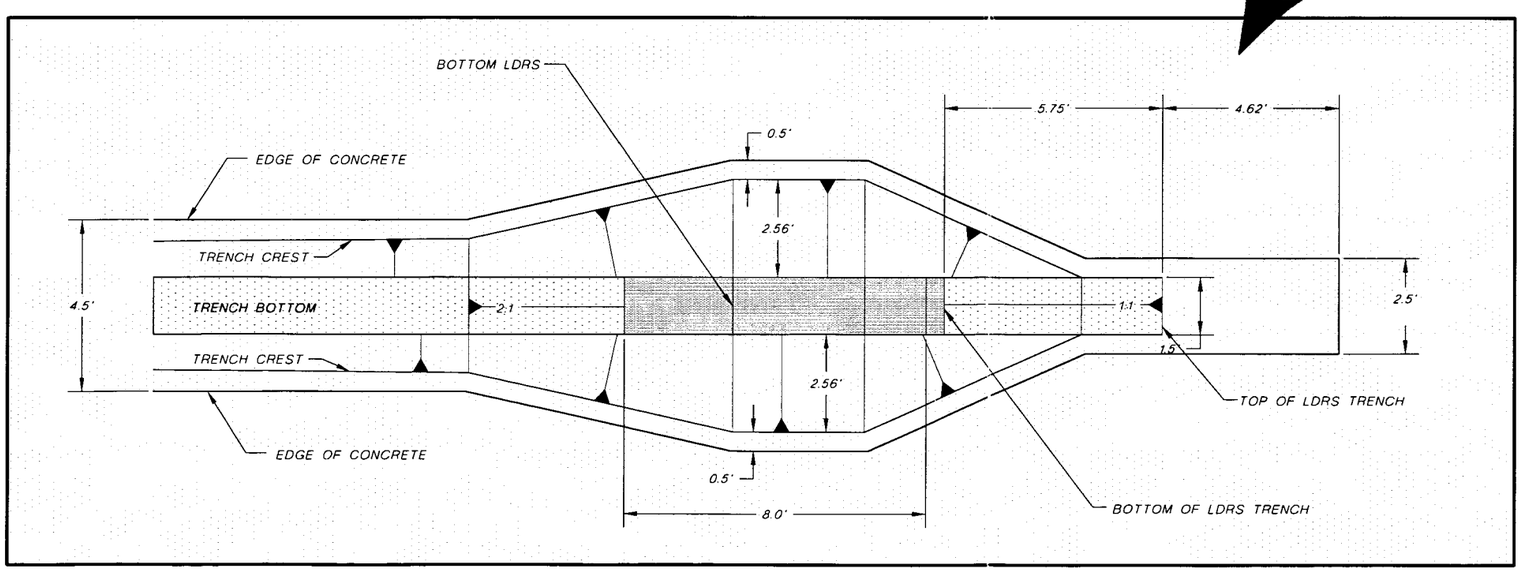

NOTE:
FOR GENERAL NOTES AND LEGEND INFORMATION SEE DRAWING No. 2, "INDEX, LEGEND AND GENERAL NOTES".

PATRICK G. CORSER NEW MEXICO 12236 REGISTERED PROFESSIONAL ENGINEER

PROFESSIONAL ENGINEER'S STATEMENT
I, Patrick G. Corser, state that this map was prepared under my supervision and all the information presented herein is true and correct to the best of my knowledge and information.
11/5/98 PATRICK CORSER
Date Patrick G. Corser, NM P.E. 12236

REV. No	REVISIONS	DATE	DESIGN BY	DRAWN BY	REVIEWED AND SIGNED BY
1	NOVEMBER 1998 REVISION	10/30/98	J.Pelicer	T.Smith	P.Corser
0	PART B PERMIT APPLICATION	12/12/97	PGC/JPP	K.Conrath	P.Corser

TRIASSIC PARK
WASTE DISPOSAL FACILITY

DRAWING TITLE:
DRUM HANDLING UNIT SUMP DETAILS

TerraMatrix
MONTGOMERY WATSON
Mining Group

Sheet 1 Of 2 Sheets
SCALE: As Shown
DRAWING No. 39

PROJECT NUMBER: 602-0200
AutoCAD FILE: TRN-DTL

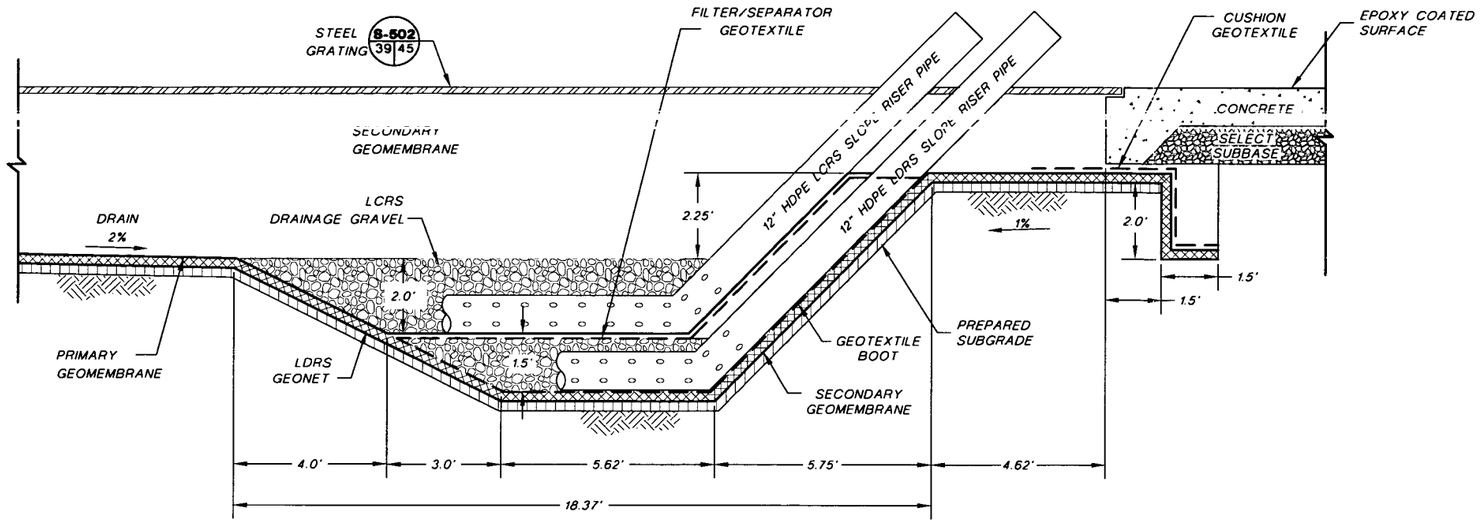

B 39 39 CROSS-SECTION B-B'
Not To Scale

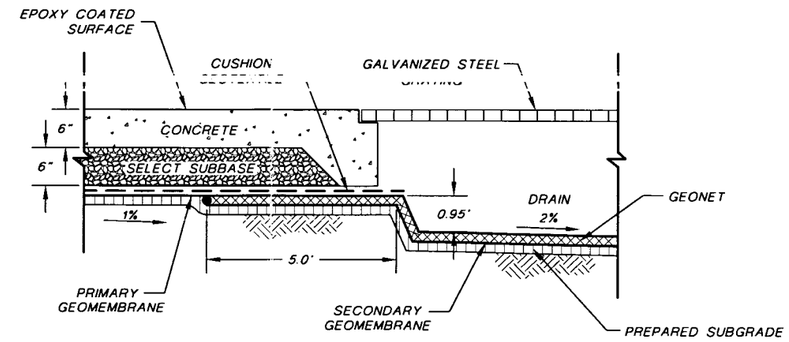

C 39 39 CROSS-SECTION C-C'
Not To Scale

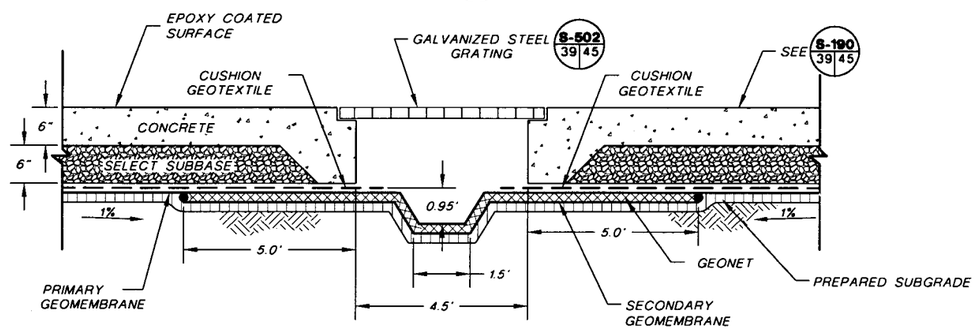

D 39 39 CROSS-SECTION D-D'
Not To Scale

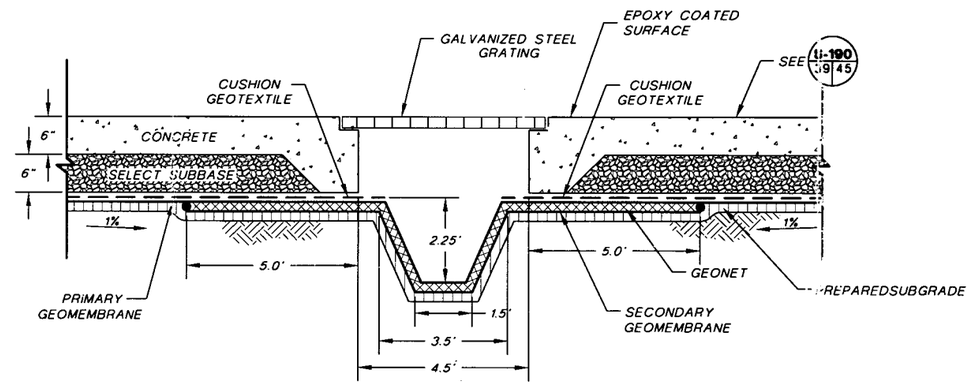

E 39 39 CROSS-SECTION E-E'
Not To Scale

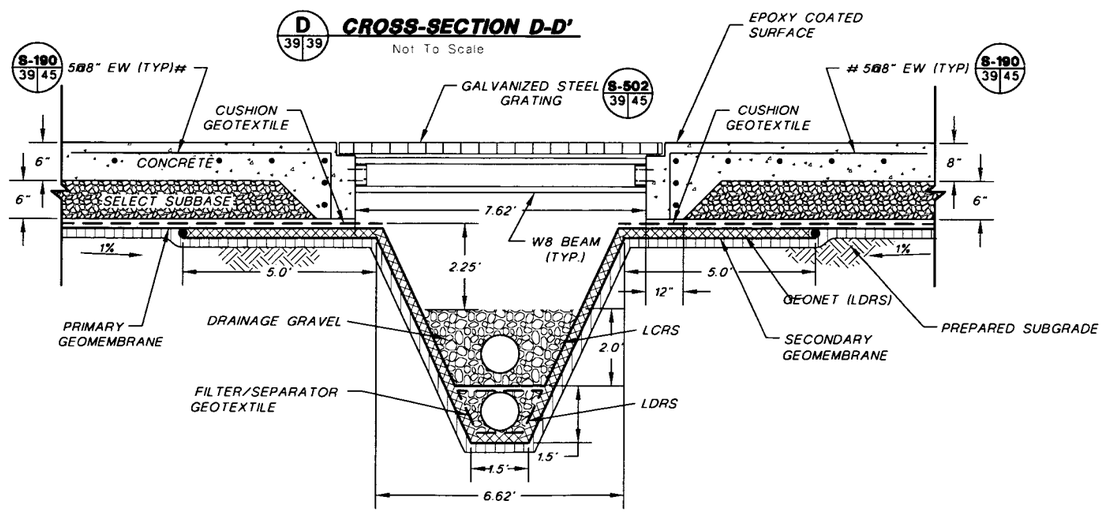

F 39 39 CROSS-SECTION F-F'
Not To Scale

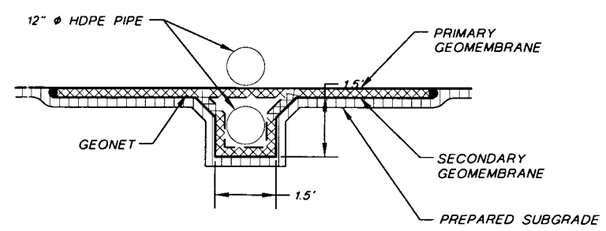

G 39 39 CROSS-SECTION G-G'
Not To Scale

NOTE:
FOR GENERAL NOTES AND LEGEND INFORMATION SEE DRAWING No. 2, "INDEX, LEGEND AND GENERAL NOTES".

PATRICK G. CORSER NEW MEXICO 12236 REGISTERED PROFESSIONAL ENGINEER

PROFESSIONAL ENGINEER'S STATEMENT

I, Patrick G. Corser, state that this map was prepared under my supervision and all the information presented hereon is true and correct to the best of my knowledge and information.

11/5/98 — Patrick G. Corser, NM P.E. 12236
Date

REV No	REVISIONS	DATE	DESIGN BY	DRAWN BY	REVIEWED AND SIGNED BY
1	NOVEMBER 1998 REVISION	10/30/98	J.Pellicer	T.Smith	P.Corser
0	PART B PERMIT APPLICATION	12/12/97	PGC/JPP	K.Conrath	P.Corser

TRIASSIC PARK
WASTE DISPOSAL FACILITY

DRAWING TITLE:
DRUM HANDLING UNIT SUMP DETAILS

TerraMatrix
MONTGOMERY WATSON
Mining Group

Sheet 2 Of 2 Sheets
SCALE: As Shown
DRAWING No. 39

PROJECT NUMBER: 602-0200
AutoCAD FILE: TRN-D1

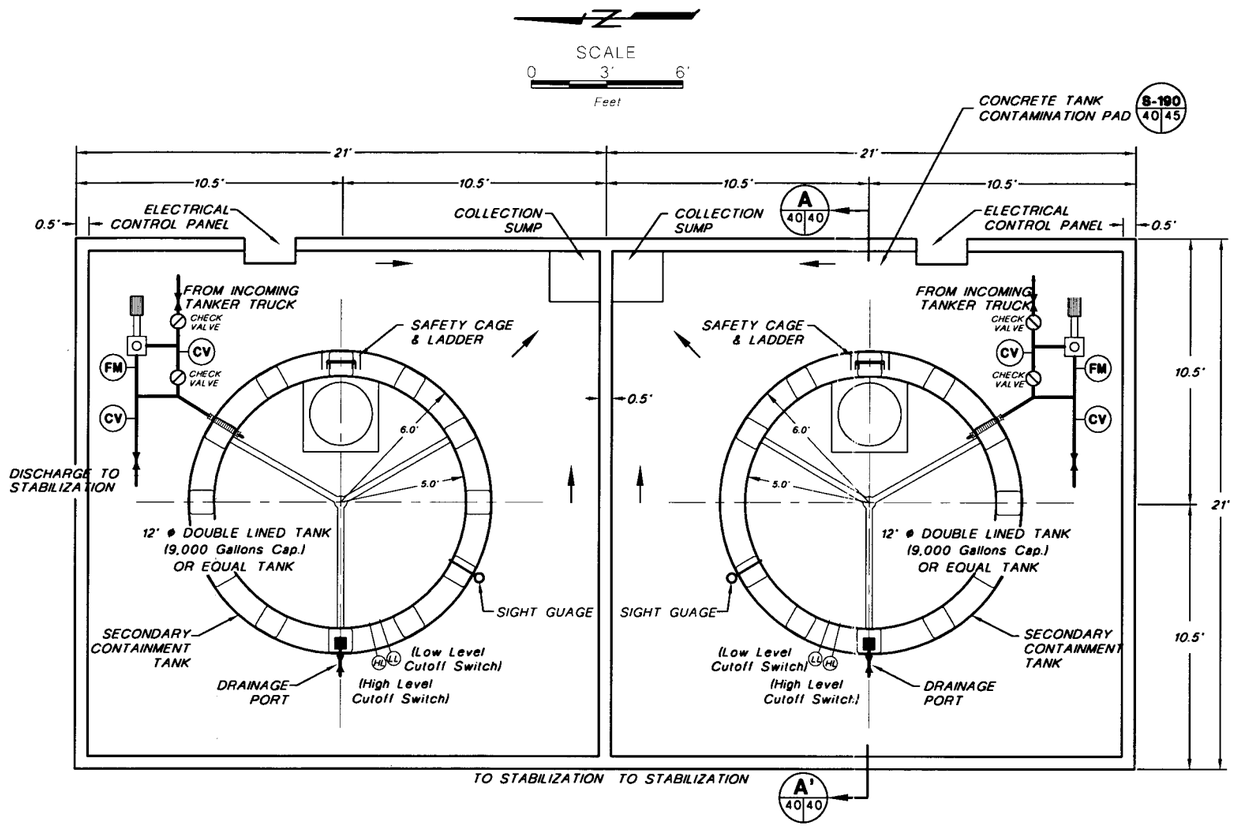

LIQUID WASTE RECEIVING & STORAGE AREA

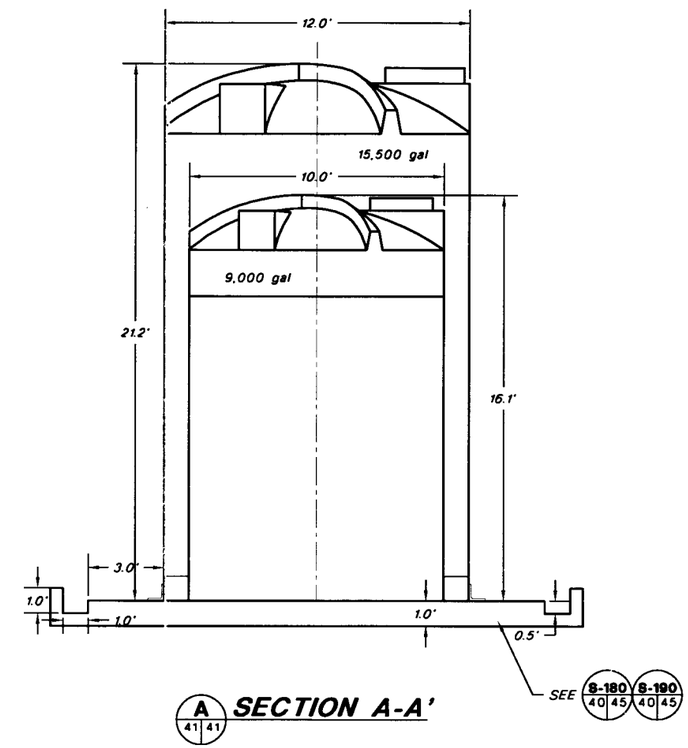

SECTION A-A'

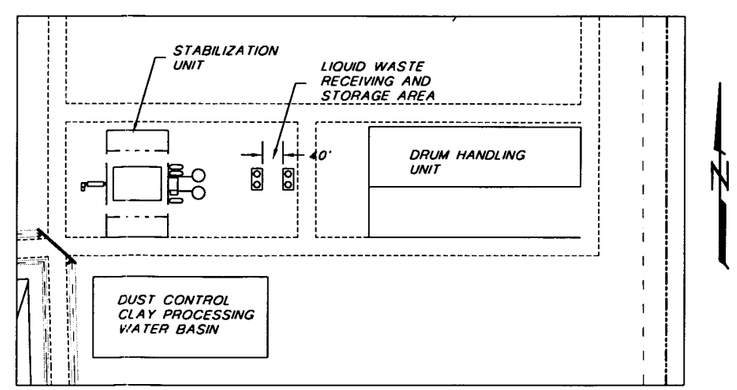

LIQUID WASTE RECEIVING & STORAGE AREA LOCATION

NOTES:
1. FOR GENERAL NOTES AND LEGEND INFORMATION SEE DRAWING No. 2, "INDEX, LEGEND AND GENERAL NOTES".
2. FOR CONCRETE DETAILS SEE DRAWING 45.
3. TWO TANKS WILL BE CONSTRUCTED INITIALLY TO SERVICE SITE EXCAVATIONS. TWO ADDITIONAL TANKS MAY BE ADDED AT A LATER DATE TO ACCOMODATE ANY INCREASES IN LIQUID WASTE VOLUME.

PATRICK G. CORSER NEW MEXICO 12236 REGISTERED PROFESSIONAL ENGINEER

PROFESSIONAL ENGINEER'S STATEMENT
I, Patrick G. Corser, state that this map was prepared under my supervision and all the information presented hereon is true and correct to the best of my knowledge and information.
11/5/98 Patrick Corser
Date Patrick G. Corser, NM P.E. 12236

Not For Construction

REV No	REVISIONS	DATE	DESIGN BY	DRAWN BY	REVIEWED AND SIGNED BY
1	NOVEMBER 1998 REVISION	10/30/98	J.Pelicer	T.Smith	P.Corser
0	PART B PERMIT APPLICATION	12/12/97	PGC/JPP	E.Simonsen	P.Corser

TRIASSIC PARK
WASTE DISPOSAL FACILITY

DRAWING TITLE:
LIQUID WASTE RECEIVING AND STORAGE UNIT LAYOUT

TerraMatrix
MONTGOMERY WATSON
Mining Group

Sheet 1 Of 1 Sheets
SCALE: See Scale Bar
DRAWING No. 40

AutoCAD FILE: GLF-LWM G PROJECT NUMBER: 602-0200

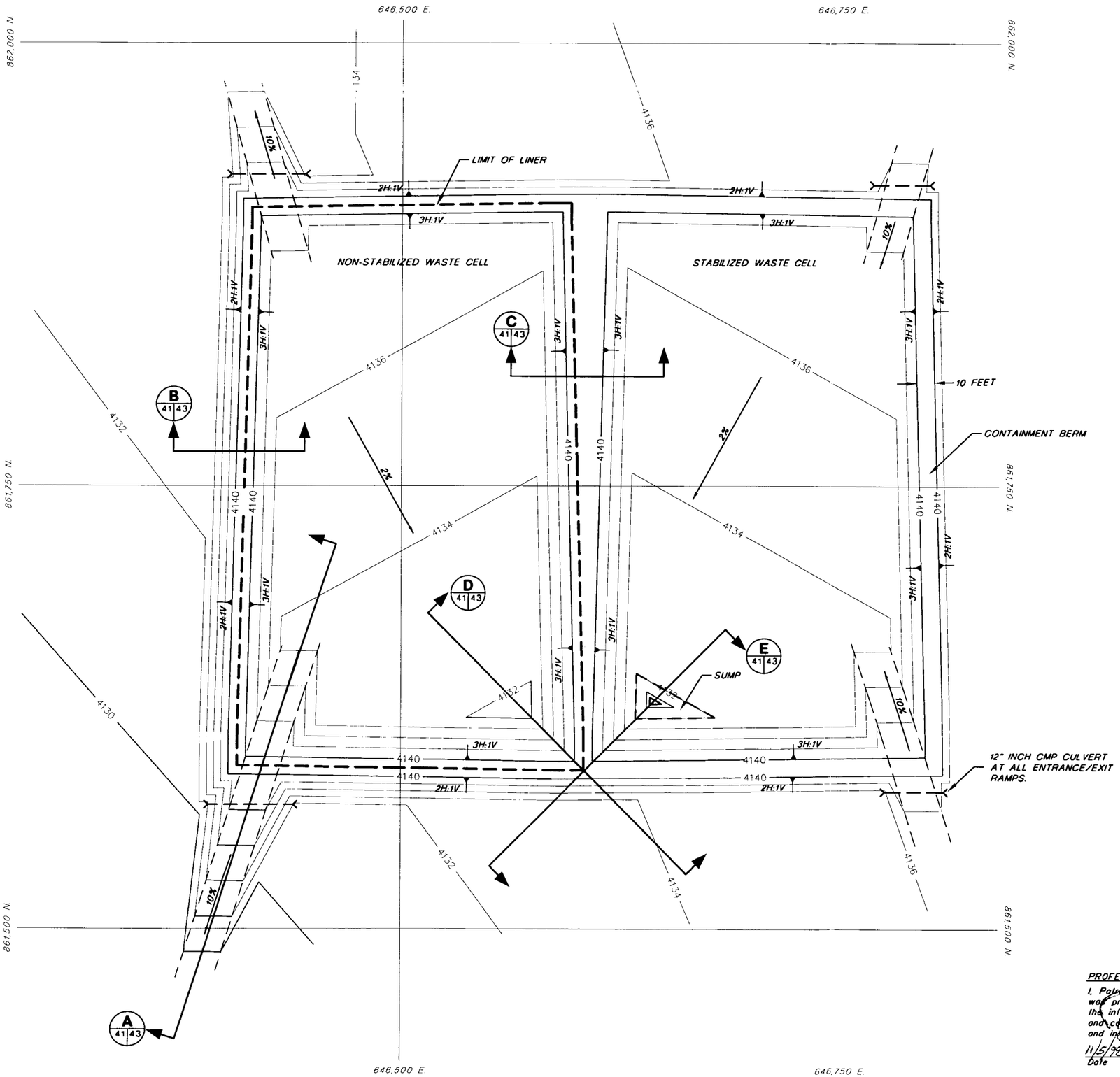

NOTE:
FOR GENERAL NOTES AND LEGEND INFORMATION SEE DRAWING No. 2, "INDEX, LEGEND AND GENERAL NOTES".

SCALE

30' 0 30' 60'

CONTOUR INTERVAL 2 FT.

Not For Construction

REV No.	REVISIONS	DATE	DESIGN BY	DRAWN BY	REVIEWED AND SIGNED BY
1	NOVEMBER 1998 REVISION	10/30/98	J.Pellicer	T.Smith	P.Corser
0	PART B PERMIT APPLICATION	12/12/97	PGC/JPP	T.SMITH	P.CORSER

PATRICK G. CORSER NEW MEXICO 12236 REGISTERED PROFESSIONAL ENGINEER

PROFESSIONAL ENGINEER'S STATEMENT

I, Patrick G. Corser, state that this map was prepared under my supervision and all the information presented hereon is true and correct to the best of my knowledge and information.

11/5/98 — Patrick G. Corser
Date — Patrick G. Corser, NM P.E. 12236

TRIASSIC PARK
WASTE DISPOSAL FACILITY

DRAWING TITLE:
TRUCK ROLL-OFF AREA DRAINAGE SURFACE CONTOURS

TerraMatrix
MONTGOMERY WATSON
Mining Group

Sheet 1 Of 1 Sheets
SCALE: AS NOTED
DRAWING No. 41

AutoCAD FILE: GANDY-1DWG PROJECT NUMBER: 602-0200

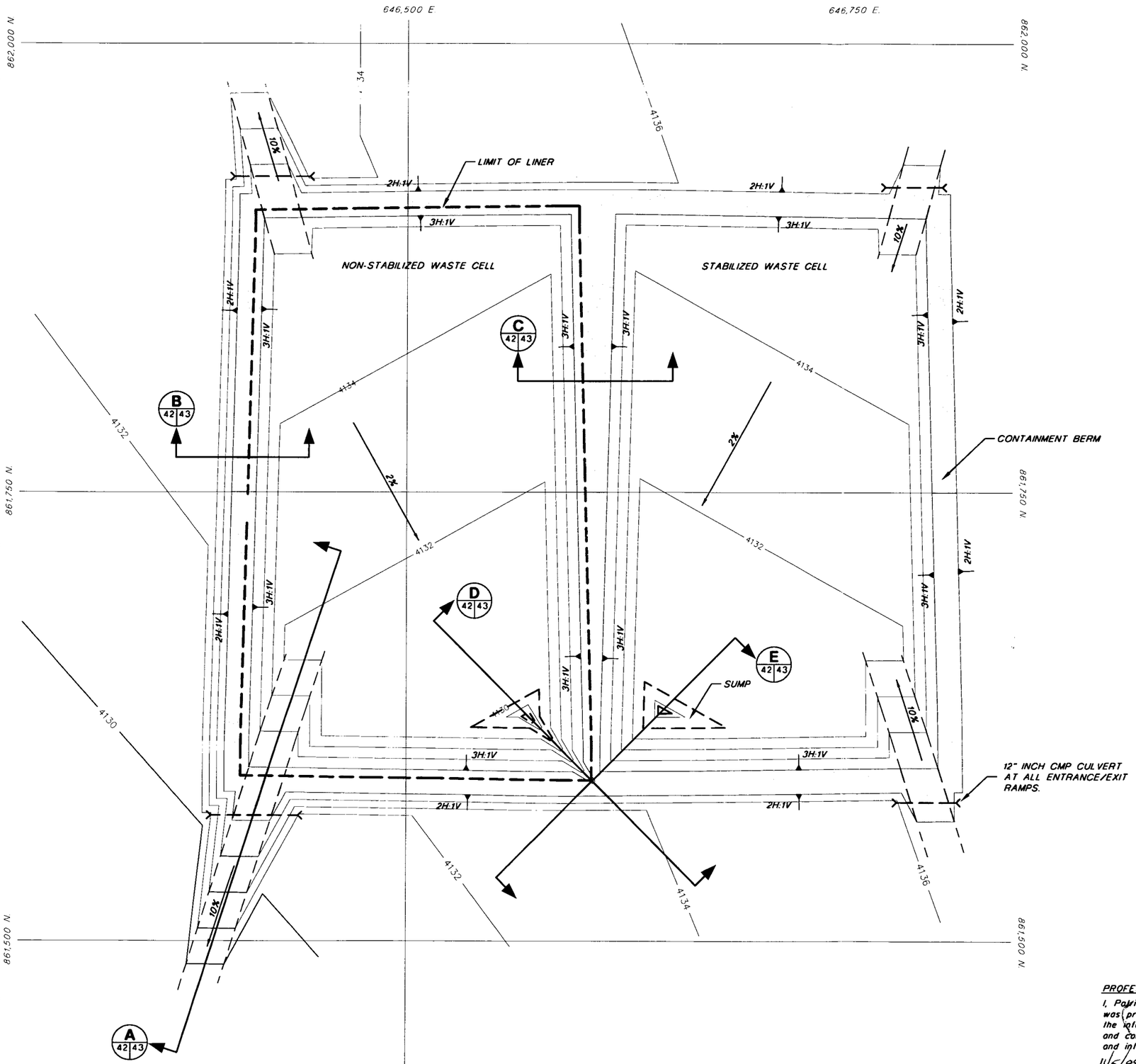

NOTE:
FOR GENERAL NOTES AND LEGEND INFORMATION SEE DRAWING No. 2, "INDEX, LEGEND AND GENERAL NOTES".

SCALE

30' 0 30' 60'

CONTOUR INTERVAL 2 FT.

Not For Construction

REV No	REVISIONS	DATE	DESIGN BY	DRAWN BY	REVIEWED AND SIGNED BY
1	NOVEMBER 1998 REVISION	11/01/98	J.Pellicer	T.Smith	P.Corser
0	PART B PERMIT APPLICATION	12/12/97	PGC/JPP	T.SMITH	P.CORSER

PATRICK G. CORSER NEW MEXICO 12236 REGISTERED PROFESSIONAL ENGINEER

PROFESSIONAL ENGINEER'S STATEMENT

I, Patrick G. Corser, state that this map was prepared under my supervision and all the information presented hereon is true and correct to the best of my knowledge and information.

11/5/98 Patrick Corser

Date — Patrick G. Corser, NM P.E. 12236

TRIASSIC PARK
WASTE DISPOSAL FACILITY

DRAWING TITLE:
TRUCK ROLL-OFF AREA SUBGRADE CONTOURS

TerraMatrix
MONTGOMERY WATSON
Mining Group

Sheet 1 Of 1 Sheets

SCALE: AS NOTED

DRAWING No. 42

AutoCAD FILE: GANDY-R.DWG PROJECT NUMBER: 602-0200

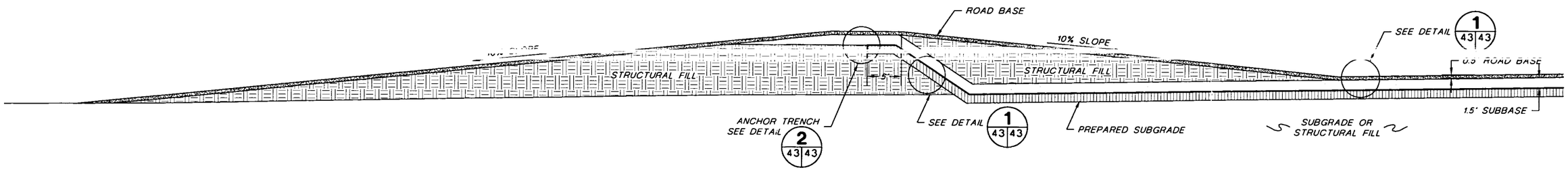

A 41|43 A 42|43 ACCESS ROAD DETAIL

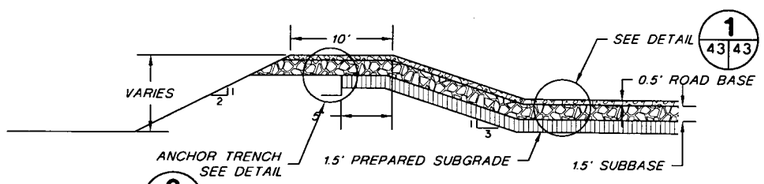

B 41|43 B 42|43 BERM DETAIL

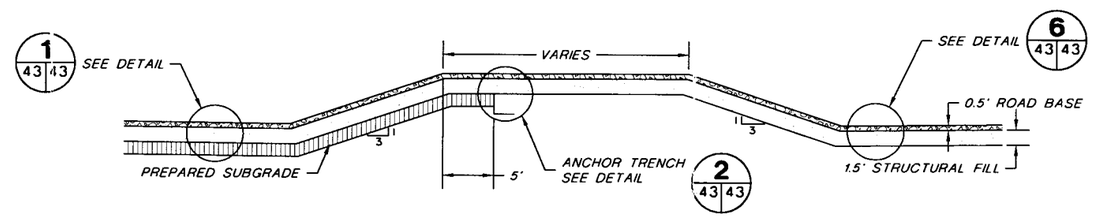

C 41|43 C 42|43 INNER FACILITY BERM DETAIL

SCALE
0 7.5' 15'
Feet

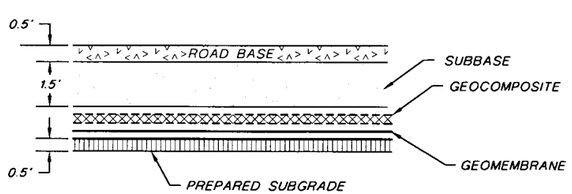

FLOOR AND SLOPE NON-STABILIZED WASTE CELL

1 43|43 LINER & DRAIN CROSS-SECTION

NOT TO SCALE

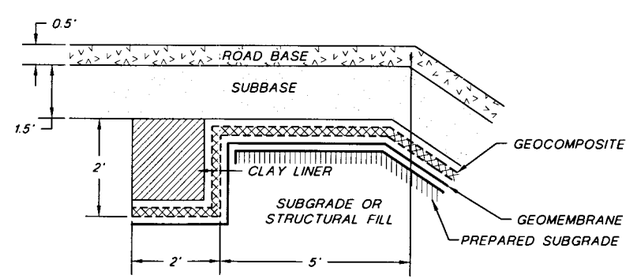

2 43|43 ANCHOR TRENCH DETAIL

NOT TO SCALE

PATRICK G. CORSER NEW MEXICO 12236 REGISTERED PROFESSIONAL ENGINEER

PROFESSIONAL ENGINEER'S STATEMENT

I, Patrick G. Corser, state that this map was prepared under my supervision and all the information presented hereon is true and correct to the best of my knowledge and information.

11/5/98 Date — Patrick G. Corser, NM P.E. 12236

NOTE:
FOR GENERAL NOTES AND LEGEND INFORMATION SEE DRAWING No. 2, "INDEX, LEGEND AND GENERAL NOTES".

Not For Construction

REV. No	REVISIONS	DATE	DESIGN BY	DRAWN BY	REVIEWED AND SIGNED BY
1	NOVEMBER 1998 REVISION	11/01/98	J.Pellicer	T.Smith	P.Corser
0	PART B PERMIT APPLICATION	12/12/97	PGC/JPP	T.Smith	P.Corser

TRIASSIC PARK
WASTE DISPOSAL FACILITY

DRAWING TITLE:
TRUCK ROLL-OFF AREA LINER DETAILS

TerraMatrix
MONTGOMERY WATSON
Mining Group

Sheet 1 Of 2 Sheets
SCALE: As Shown
DRAWING No. 43

AutoCAD FILE: ROLLOF.DG PROJECT NUMBER 602-0200

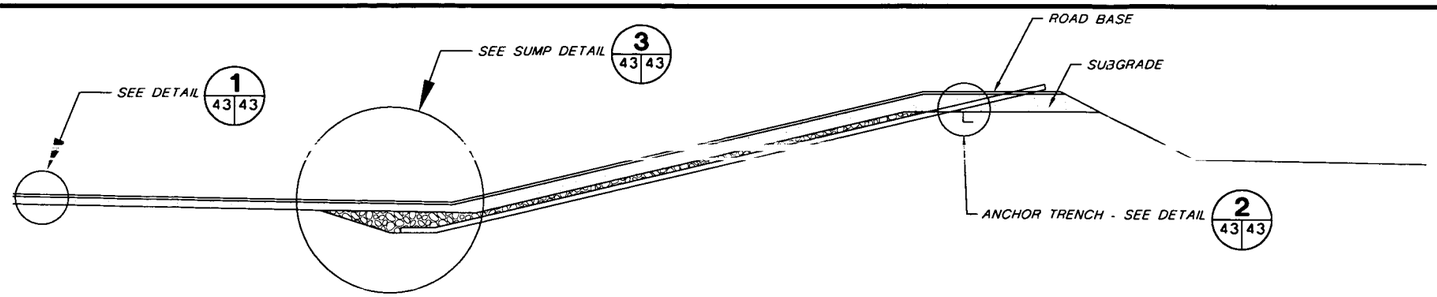

D D 41|43 42|43 CROSS-SECTION D

SCALE
0 7.5' 15'
Feet

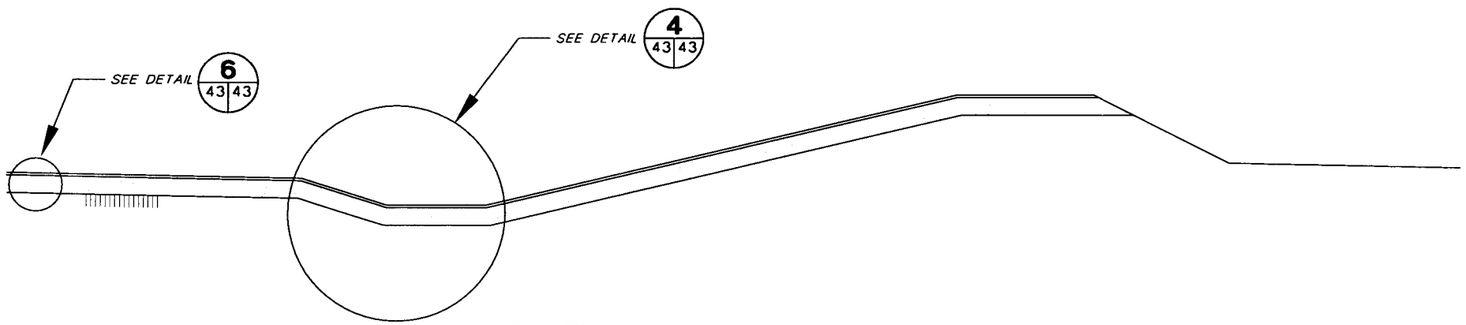

E E 41|43 42|43 CROSS-SECTION E

NOT TO SCALE

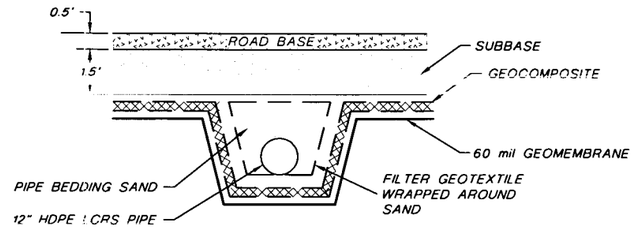

5 43|43 PIPE TRENCH DETAIL

NOT TO SCALE

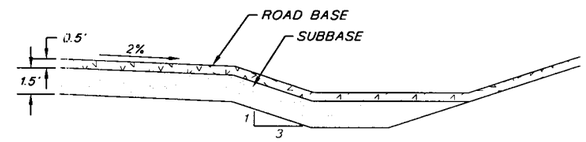

4 43|43 STABILIZED WASTE CELL SUMP

NOT TO SCALE

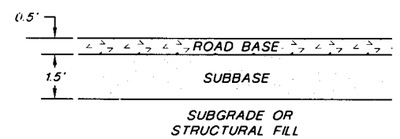

6 43|43 FLOOR AND SLOPE NON-STABILIZED WASTE CELL LINER & DRAIN CROSS-SECTION

NOT TO SCALE

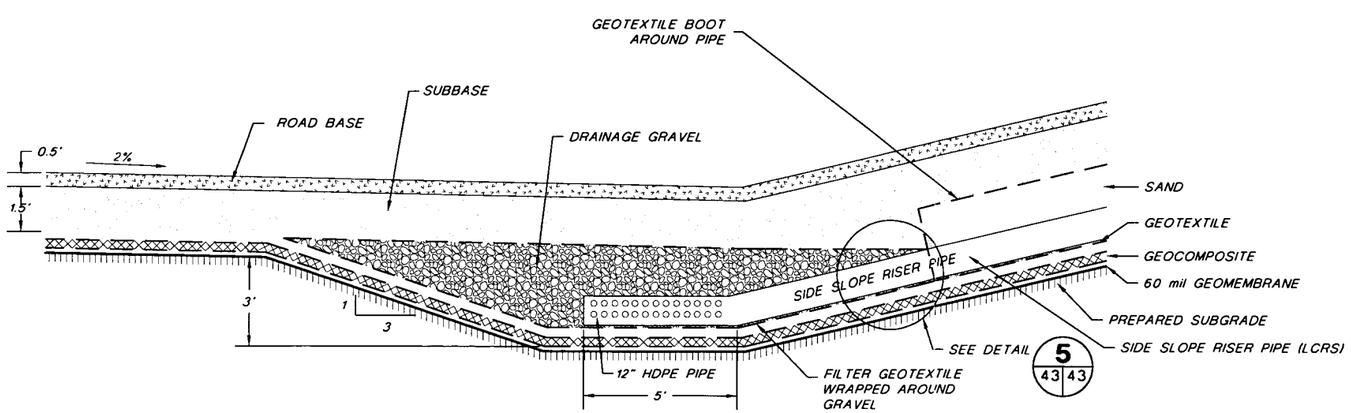

3 43|43 SUMP DETAIL

SCALE
0 2.5' 5'
Feet

NOTE:
FOR GENERAL NOTES AND LEGEND INFORMATION SEE DRAWING No. 2, "INDEX, LEGEND AND GENERAL NOTES".

PROFESSIONAL ENGINEER'S STATEMENT
I, Patrick G. Corser, state that this map was prepared under my supervision and all the information presented hereon is true and correct to the best of my knowledge and information.
11/5/98 Patrick Corser
Date Patrick G. Corser, NM P.E. 12236

PATRICK G. CORSER NEW MEXICO 12236 REGISTERED PROFESSIONAL ENGINEER

Not For Construction

REV. No.	REVISIONS	DATE	DESIGN BY	DRAWN BY	REVIEWED AND SIGNED BY
1	NOVEMBER 1998 REVISION	11/01/98	J.Pellicer	T.Smith	P.Corser
0	PART B PERMIT APPLICATION	12/12/97	PGC/JPP	T.Smith	P.Corser

TRIASSIC PARK WASTE DISPOSAL FACILITY

DRAWING TITLE:
TRUCK ROLL-OFF AREA LINER DETAILS

TerraMatrix
MONTGOMERY WATSON
Mining Group

Sheet 2 Of 2 Sheets
SCALE: As Shown
DRAWING No. 43

AutoCAD FILE: ROLLOF WG PROJECT NUMBER: 602-0200

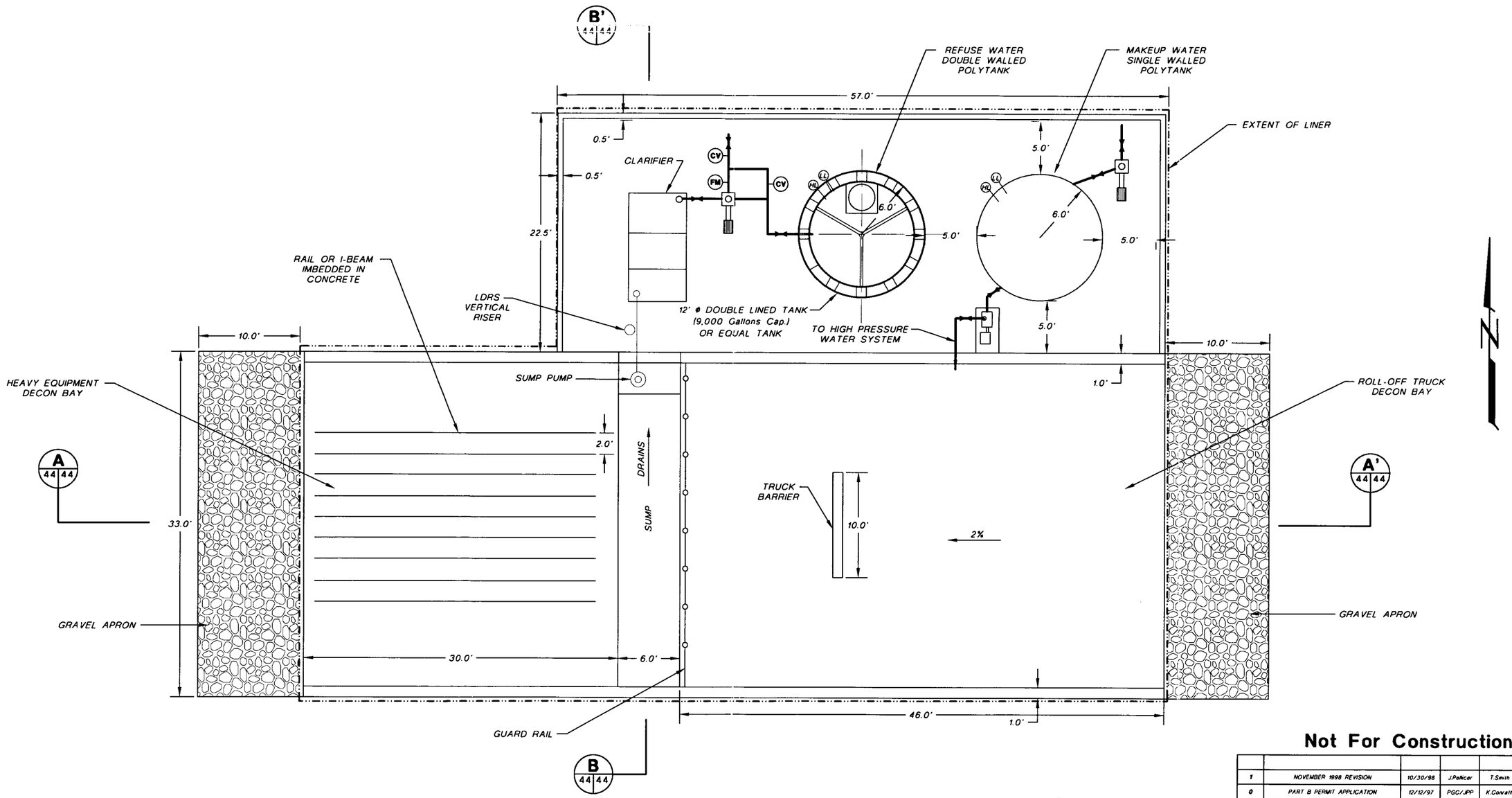

Not For Construction

REV No.	REVISIONS	DATE	DESIGN BY	DRAWN BY	REVIEWED AND SIGNED BY
1	NOVEMBER 1998 REVISION	10/30/98	J.Pelicer	T.Smith	P.Corser
0	PART B PERMIT APPLICATION	12/12/97	PGC/JPP	K.Conrath	P.Corser

SCALE
0 5 10
FEET

PATRICK G. CORSER NEW MEXICO 12236 REGISTERED PROFESSIONAL ENGINEER

PROFESSIONAL ENGINEER'S STATEMENT

I, Patrick G. Corser, state that this map was prepared under my supervision and all the information presented hereon is true and correct to the best of my knowledge and information.

11/5/98 Patrick Corser
Date Patrick G. Corser, NM P.E. 12236

TRIASSIC PARK
WASTE DISPOSAL FACILITY

DRAWING TITLE:
TRUCK WASH LAYOUT AND DETAILS

TerraMatrix
MONTGOMERY WATSON
Mining Group

Sheet 1 Of 2 Sheets
SCALE: Not to Scale
DRAWING No. 44

NOTES:
1. FOR GENERAL NOTES AND LEGEND INFORMATION SEE DRAWING No. 2, "INDEX, LEGEND AND GENERAL NOTES".
2. FOR CONCRETE DETAILS SEE DRAWING 45.

PROJECT NUMBER: 602-0200
AutoCAD FILE: TRKWAS

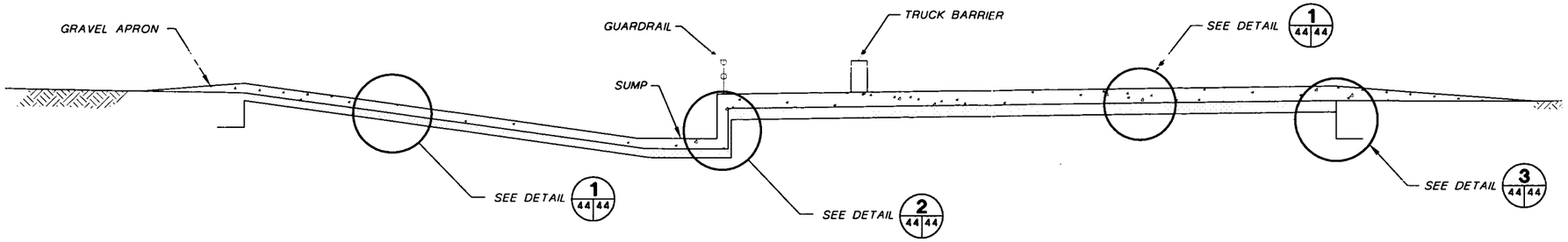

A 44|44 TRUCK WASH CROSS-SECTION

SCALE
0 5 10
FEET

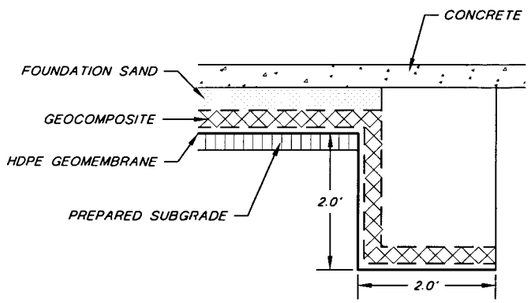

3 44|44 TRUCK WASH ANCHOR TRENCH DETAIL

NOT TO SCALE

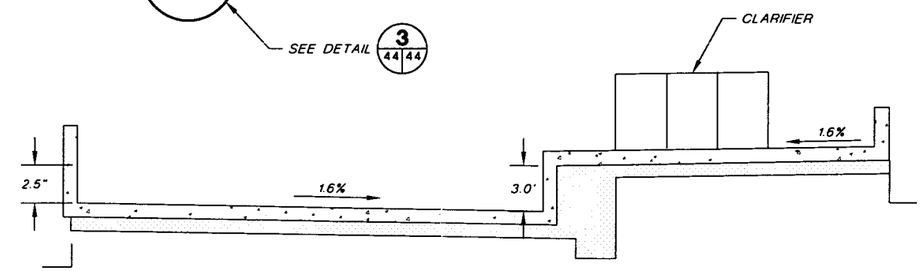

B 44|44 TRUCK WASH SUMP CROSS-SECTION

SCALE
0 5 10
FEET

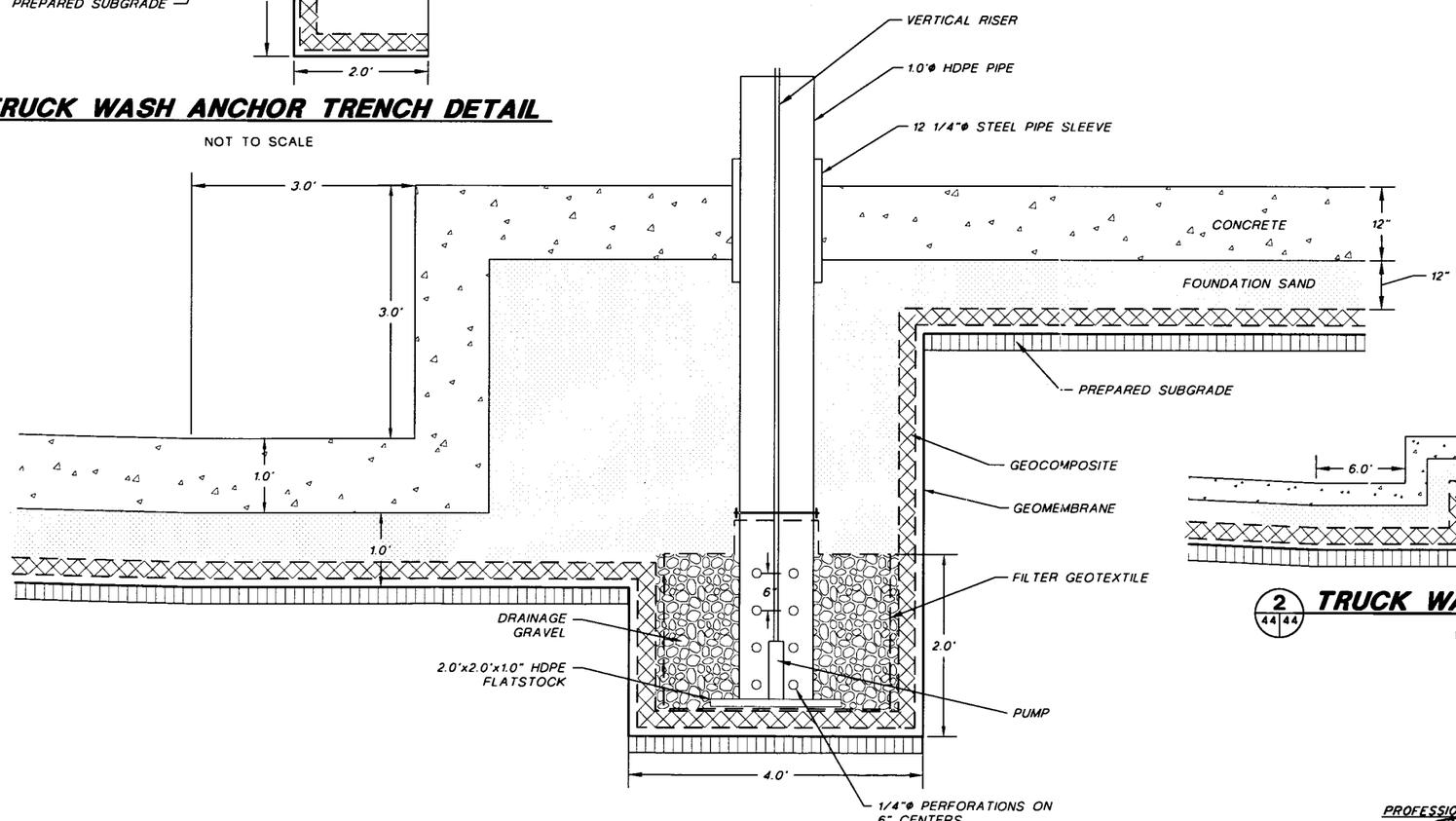

TRUCK WASH LEAK DETECTION SUMP

SCALE
0 1 2
FEET

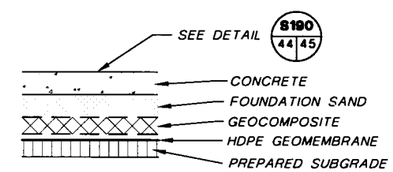

1 44|44 TRUCK WASH LINER DETAIL

NOT TO SCALE

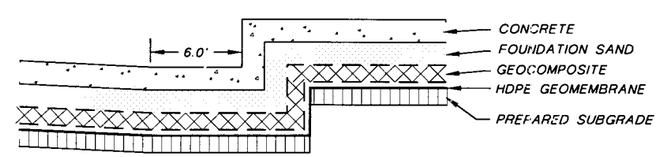

2 44|44 TRUCK WASH SUMP DETAIL

NOT TO SCALE

PATRICK G. CORSER
NEW MEXICO
12236
REGISTERED PROFESSIONAL ENGINEER

PROFESSIONAL ENGINEER'S STATEMENT

I, Patrick G. Corser, state that this map was prepared under my supervision and all the information presented hereon is true and correct, to the best of my knowledge and information.

11/5/98
Date

Patrick G. Corser, NM P.E. 12236

Not For Construction

REV No	REVISIONS	DATE	DESIGN BY	DRAWN BY	REVIEWED AND SIGNED BY
1	NOVEMBER 1998 REVISION	10/30/98	J.Pellicer	T.Smith	P.Corser
0	PART B PERMIT APPLICATION	12/12/97	PGC/JPP	K.Conrath	P.Corser

TRIASSIC PARK WASTE DISPOSAL FACILITY

DRAWING TITLE:
TRUCK WASH LAYOUT AND DETAILS

TerraMatrix
MONTGOMERY WATSON
Mining Group

Sheet 2 Of 2 Sheets
SCALE: Not to Scale
DRAWING No. 44

AutoCAD FILE: TRKWS.DWG PROJECT NUMBER: 602-0200

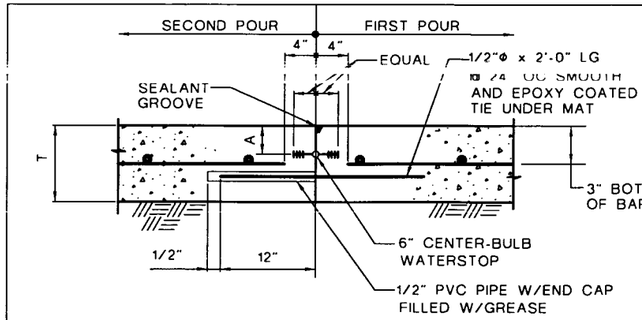

SINGLE MAT REINF - SLEEVE - TYPE JOINT

(TYP CONSTRUCTION JOINT UNLESS OTHERWISE NOTED)

S-110 / 45 WITH WATERSTOP AND SEALANT GROOVE

S-111 / 45 NO WATERSTOP OR SEALANT GROOVE

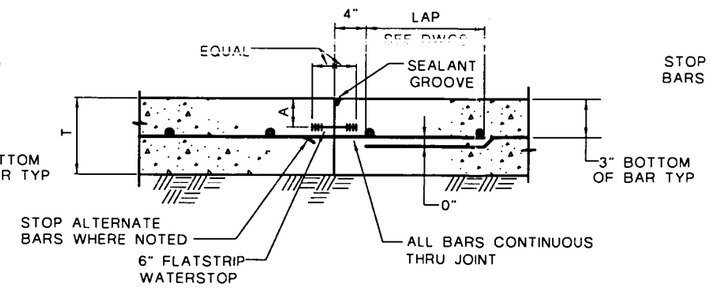

SINGLE MAT REINF - CONTINUOUS THRU JOINT

(ONLY WHEN SPECIFIED ON DRAWINGS)

S-112 / 45 WITH WATERSTOP AND SEALANT GROOVE

S-113 / 45 NO WATERSTOP OR SEALANT GROOVE

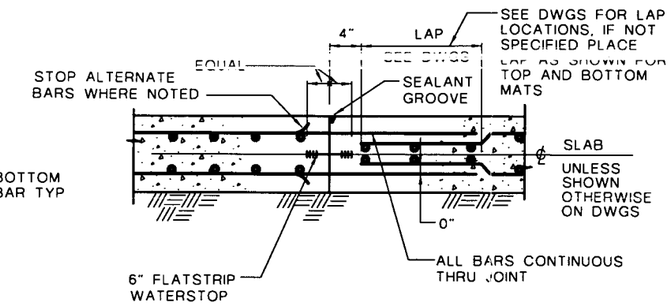

DOUBLE MAT REINF

S-114 / 45 WITH WATERSTOP AND SEALANT GROOVE

S-115 / 45 NO WATERSTOP OR SEALANT GROOVE

T	A
6"	2"
7"	2 1/2"
8"	2 1/2"

NOTES:

1. IN ALL CONSTRUCTION JOINTS WITH WATERSTOPS, APPLY 2 COATS OF BOND BREAKER TO FACE OF JOINT, AVOID COATING WATERSTOP (AND SEALANT GROOVE WHERE USED)
2. WATERSTOPS AND SEALANT GROOVES TO BE PROVIDED IN ALL WATER RETAINING SLABS, SEE DRAWINGS, FOR OTHER LOCATIONS WHERE THEY MAY BE REQUIRED
3. STAGGER SPLICES UNLESS NOTED OTHERWISE

SLAB-ON-GRADE CONSTRUCTION JOINTS

REV 011696

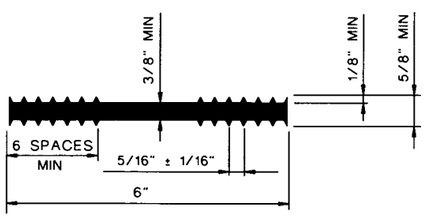

S-105 / 45 6" FLATSTRIP WATERSTOP

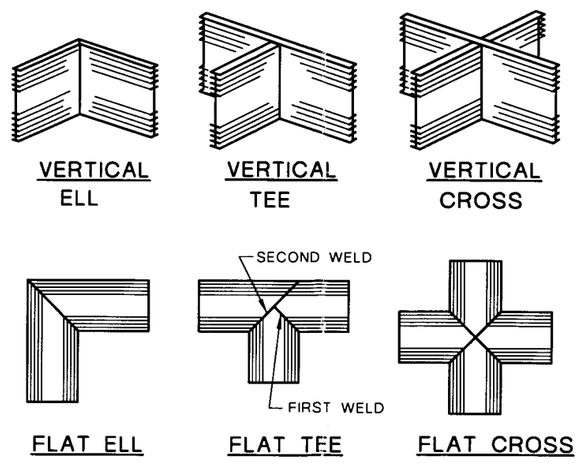

S-108 / 45 PREFABRICATED WATERSTOPS JOINTS

NOTE:
FOR GENERAL NOTES AND LEGEND INFORMATION SEE DRAWING No. 2, "INDEX, LEGEND AND GENERAL NOTES".

PROFESSIONAL ENGINEER'S STATEMENT

I, Patrick G. Corser, state that this map was prepared under my supervision and all the information presented hereon is true and correct to the best of my knowledge and information.

11/5/98 Patrick G. Corser
Date Patrick G. Corser, NM P.E. 12236

PATRICK G. CORSER NEW MEXICO 12236 REGISTERED PROFESSIONAL ENGINEER

DETAIL/SECTION NUMBER
DRAWING No. WHERE DETAIL/SECTION IS REFERENCED
DRAWING No. WHERE DETAIL/SECTION IS SHOWN

REV No	REVISIONS	DATE	DESIGN BY	DRAWN BY	REVIEWED AND SIGNED BY
0	PART B PERMIT APPLICATION	12/12/97	PGC/JPP	J.BEVER	P.CORSER

TRIASSIC PARK
WASTE DISPOSAL FACILITY

DRAWING TITLE:
CONCRETE AND GRATING DETAILS

TerraMatrix
MONTGOMERY WATSON
Mining Group

Sheet 1 Of 5 Sheets
SCALE: AS NOTED
DRAWING No. 45

AutoCAD FILE: CONC-Detail.DWG PROJECT NUMBER 602-0200

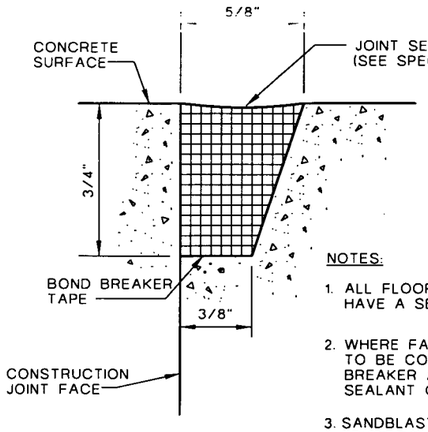

NOTES:

1. ALL FLOOR JOINTS SHALL HAVE A SEALANT GROOVE
2. WHERE FACE OF JOINT IS TO BE COATED WITH BOND BREAKER AVOID COATING SEALANT GROOVE
3. SANDBLASTING REQUIRED PRIOR TO APPLICATION OF PRIMER
4. USE BONDBREAKER TAPE ONLY ON SLIP DOWEL JOINTS

S-131 / 45 SEALANT GROOVE

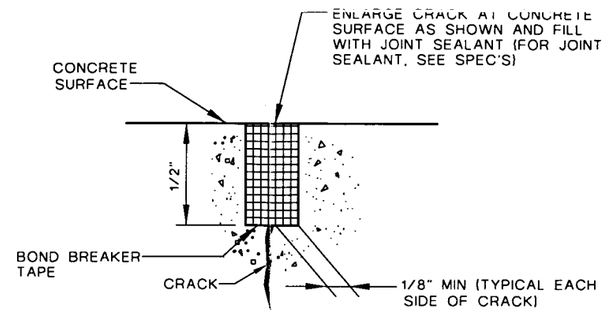

NOTE:

PRIOR TO USE, STRUCTURES SHALL HAVE ALL CRACKS REPAIRED AS SHOWN IN THIS DETAIL

S-132 / 45 CONCRETE CRACK REPAIR

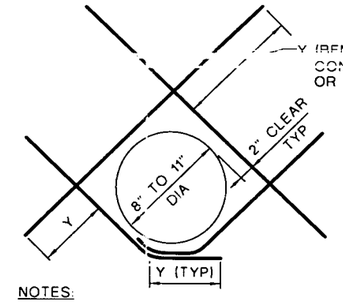

BAR SIZE	Y GRADE 60
No.4	15"
No.5	21"
No.6	24"
No.7	27"
No.8	36"
No.9	42"

NOTES:

1. CUT NORMAL REINFORCEMENT 2" CLEAR OF OPENING
2. DIAGONAL BARS TO BE PLACED:
   A) AT CENTERLINE OF WALL OR SLAB WHERE ONE LAYER OF REINFORCEMENT IS PROVIDED
   B) AT EACH FACE OF WALL OR SLAB WHERE TWO LAYERS OF REINFORCEMENT ARE PROVIDED
3. UNLESS OTHERWISE NOTED, SIZE OF DIAGONAL BARS SHALL BE THE SIZE OF THE LARGEST NORMAL REINFORCING BAR CUT
4. THIS DETAIL TO BE USED ONLY WHEN CALLED FOR ON THE DRAWINGS OR WHEN NO OTHER DETAIL IS SPECIFIED

S-142 / 45 DIAGONAL REINFORCEMENT AT CIRCULAR OPENINGS (8" - 11" DIA)

NOTE:
FOR GENERAL NOTES AND LEGEND INFORMATION SEE DRAWING No. 2, "INDEX, LEGEND AND GENERAL NOTES".

PATRICK G. CORSER NEW MEXICO 12236 REGISTERED PROFESSIONAL ENGINEER

PROFESSIONAL ENGINEER'S STATEMENT

I, Patrick G. Corser, state that this map was prepared under my supervision and all the information presented hereon is true and correct to the best of my knowledge and information.

11/5/98 Date — Patrick G. Corser, NM P.E. 12236

DETAIL/SECTION NUMBER (A / 5 6)
DRAWING No. WHERE DETAIL/SECTION IS REFERENCED
DRAWING No. WHERE DETAIL/SECTION IS SHOWN

REV No	REVISIONS	DATE	DESIGN BY	DRAWN BY	REVIEWED AND SIGNED BY
0	PART B PERMIT APPLICATION	12/12/97	PGC/JPP	J.BEVER	P.CORSER

TRIASSIC PARK
WASTE DISPOSAL FACILITY

DRAWING TITLE:
CONCRETE AND GRATING DETAILS

TerraMatrix
MONTGOMERY WATSON
Mining Group

Sheet 2 Of 5 Sheets
SCALE: AS NOTED
DRAWING No. 45

AutoCAD FILE: CONC_B.DWG PROJECT NUMBER: 602-0200

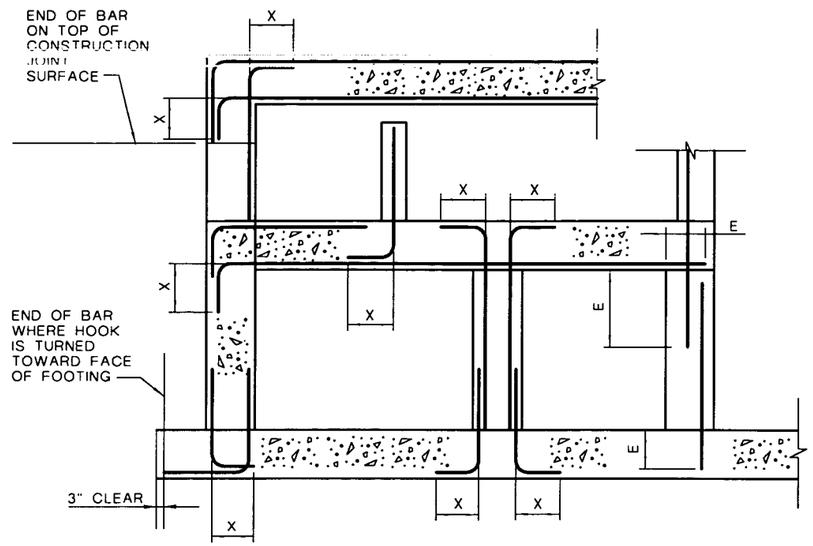

SECTION

LENGTH (INCHES)			
BAR SIZE	HOOK X	LAP	EMBEDMENT E
No.3	6"	18"	12"
No.4	8"	18"	14"
No.5	10"	23"	18"
No.6	12"	28"	22"
No.7	14"	33"	25"
No.8	16"	SEE TABLE BELOW	SEE TABLE BELOW
No.9	19"		
No.10	22"		
No.11	24"		

LENGTH (INCHES)						
REBAR SIZE	FOR 1" TO < 2" CONCRETE COVER		FOR 2" TO < 3" CONCRETE COVER		FOR 3" AND LARGER CONCRETE COVER	
	REBAR SPACING (CENTER TO CENTER)		REBAR SPACING (CENTER TO CENTER)		REBAR SPACING (CENTER TO CENTER)	
	< 8"	≥ 8"	< 8"	≥ 8"	< 8"	≥ 8"
LAP						
No.8	62"	62"	37"	37"	37"	37"
No.9	99"	79"	69"	55"	49"	42"
No.10	125"	100"	88"	70"	63"	50"
No.11	154"	123"	108"	86"	77"	62"
EMBEDMENT E						
No.8	48"	48"	29"	29"	29"	29"
No.9	77"	61"	54"	43"	38"	33"
No.10	97"	77"	68"	54"	49"	39"
No.11	119"	95"	84"	67"	60"	48"

NOTES:

1. USE LAP LENGTHS AS DETERMINED FROM THESE TABLES UNLESS SHOWN OTHERWISE
2. THE TABLES SHOWN ARE FOR f'C=4000 PSI AND fy=60,000 PSI
3. MULTIPLY THE LAP & E SHOWN IN THESE TABLES BY 1.3 FOR WALL HORIZONTAL REBARS AND SLAB BARS WITH 12" OR MORE FRESH CONCRETE UNDERNEATH
4. WHEN BARS OF DIFFERENT SIZE ARE LAP SPLICED, LAP LENGTH SHALL BE THE LARGER OF:
   EMBEDMENT LENGTH OF LARGER BAR
   LAP LENGTH OF SMALLER BAR
5. UNLESS NOTED OTHERWISE USE REBAR COUPLERS FOR SPLICES OF No.11 AND LARGER BARS
6. ALL DOWEL BARS SHALL EXTEND AN EMBEDMENT LENGTH E INTO ANOTHER MEMBER OR ACROSS A CONSTRUCTION JOINT UNLESS SHOWN TO SPLICE WITH OTHER BARS OR TO EXTEND TO THE FAR FACE OF THE MEMBER AND END WITH A STANDARD HOOK

S-143 / - / 45 STANDARD 90° BAR HOOKS, EMBEDMENT LENGTHS AND LAP LENGTHS

UNLESS OTHERWISE NOTED ON DRAWINGS

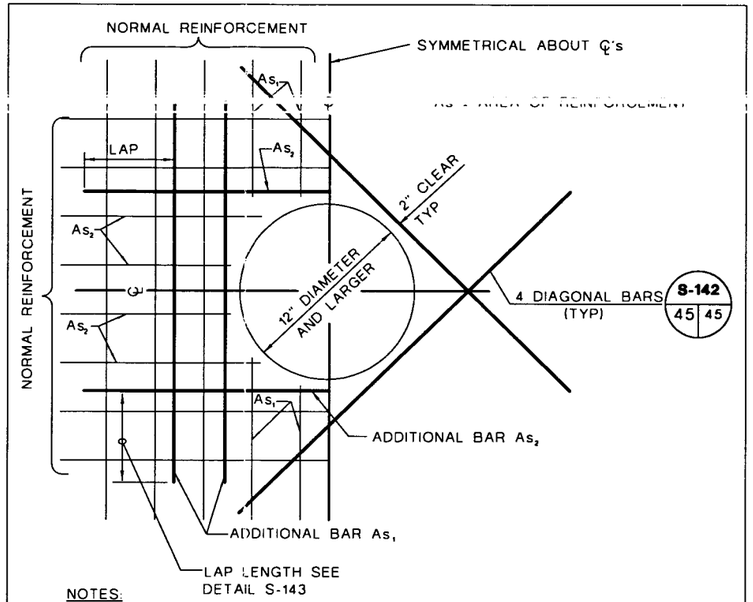

NOTES:

1. CUT NORMAL REINFORCEMENT AT OPENINGS:
   As1 AND As2 = 1/2 AREA OF CUT BARS TO BE ADDED ON EACH SIDE OF OPENING
2. ADDITIONAL BARS As1 AND As2 TO BE PLACED:
   A) AT CENTERLINE OF WALLS OR SLABS WHERE ONE LAYER OF REINFORCEMENT IS PROVIDED
   B) AT EACH FACE OF WALLS OR SLABS WHERE TWO LAYERS OF REINFORCEMENT ARE PROVIDED
3. INCREASE SIZE OF ADDITIONAL BARS AS NEEDED TO FIT WITHIN A DISTANCE OF 2 X WALL/SLAB THICKNESS FROM OPENING, PROVIDE 2" MIN CLEAR BETWEEN BARS
4. THIS DETAIL TO BE USED ONLY WHEN NO OTHER DETAIL IS INDICATED ON THE DRAWINGS
5. WHERE A SLAB OR INTERSECTING WALL CONNECTS WITHIN ONE WALL THICKNESS OF THE OPENING, ADDITIONAL BARS ON THAT SIDE MAY BE OMITTED

S-144 / - / 45 ADDITIONAL REINFORCEMENT AT CIRCULAR OPENINGS (12" DIA OR LARGER)

NOTE:
FOR GENERAL NOTES AND LEGEND INFORMATION SEE DRAWING No. 2, "INDEX, LEGEND AND GENERAL NOTES".

A / 6 / 6
DETAIL/SECTION NUMBER
DRAWING No. WHERE DETAIL/SECTION IS REFERENCED
DRAWING No. WHERE DETAIL/SECTION IS SHOWN

PATRICK G. CORSER NEW MEXICO 12236 REGISTERED PROFESSIONAL ENGINEER

PROFESSIONAL ENGINEER'S STATEMENT

I, Patrick G. Corser, state that this map was prepared under my supervision and all the information presented hereon is true and correct to the best of my knowledge and information.

11/5/98 *Patrick G. Corser, NM P.E. 12236*
Date

REV. No	REVISIONS	DATE	DESIGN BY	DRAWN BY	REVIEWED AND SIGNED BY
0	PART B PERMIT APPLICATION	12/12/97	PGC/JPP	J.BEVER	P.CORSER

TRIASSIC PARK
WASTE DISPOSAL FACILITY

DRAWING TITLE:
CONCRETE AND GRATING DETAILS

TerraMatrix MONTGOMERY WATSON Mining Group

Sheet 3 Of 5 Sheets
SCALE: AS NOTED
DRAWING No. 45

AutoCAD FILE: CONC-2.DWG PROJECT NUMBER: 602-0200

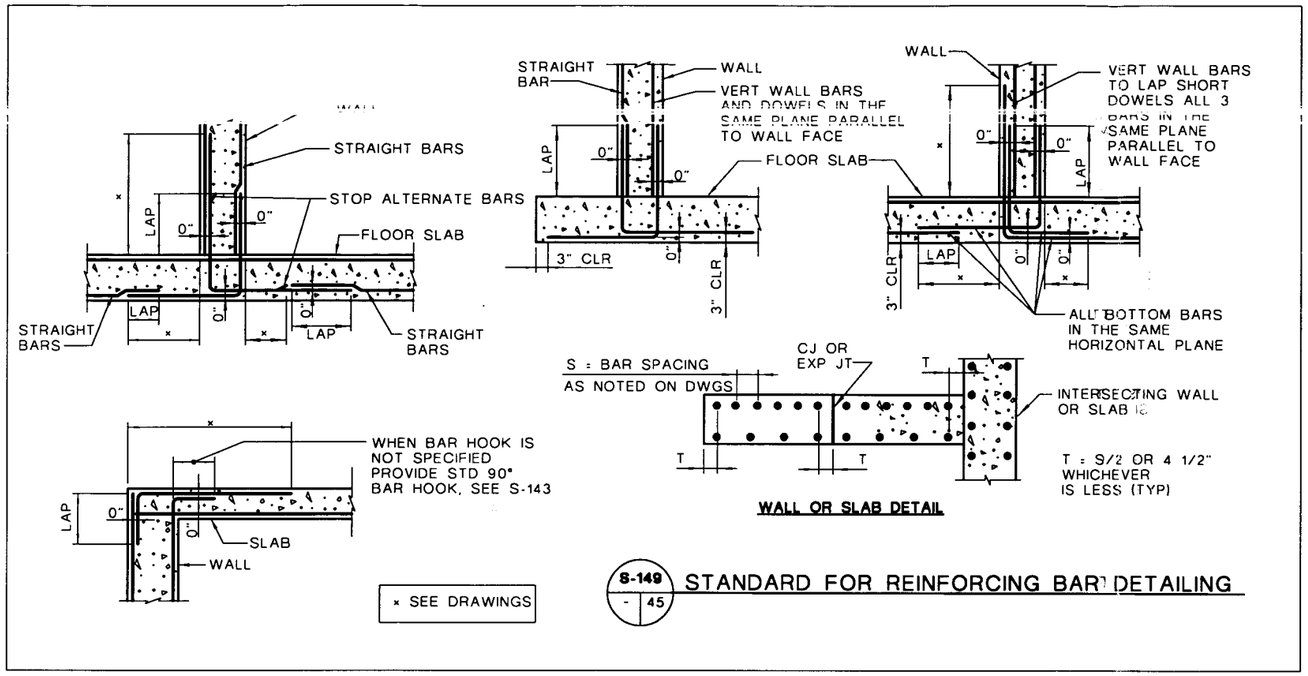

S-149 / 45 STANDARD FOR REINFORCING BAR DETAILING

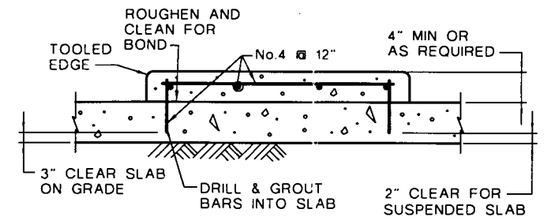

S-191 / 45 HOUSEKEEPING PAD

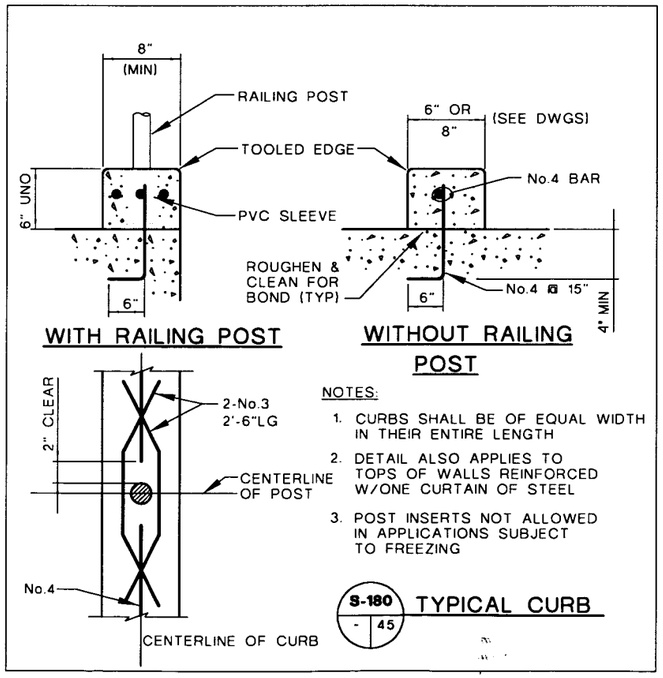

NOTES:

1. CURBS SHALL BE OF EQUAL WIDTH IN THEIR ENTIRE LENGTH
2. DETAIL ALSO APPLIES TO TOPS OF WALLS REINFORCED W/ONE CURTAIN OF STEEL
3. POST INSERTS NOT ALLOWED IN APPLICATIONS SUBJECT TO FREEZING

S-180 / 45 TYPICAL CURB

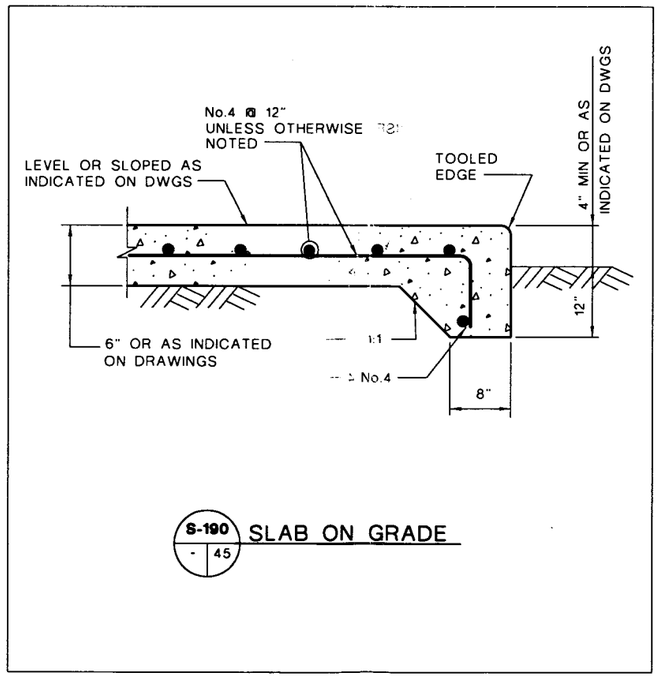

S-190 / 45 SLAB ON GRADE

NOTE:
FOR GENERAL NOTES AND LEGEND INFORMATION SEE DRAWING No. 2, "INDEX, LEGEND AND GENERAL NOTES".

PROFESSIONAL ENGINEER'S STATEMENT

I, Patrick G. Corser, state that this map was prepared under my supervision and all the information presented hereon is true and correct to the best of my knowledge and information.

11/5/98 — Patrick G. Corser, NM P.E. 12236
Date

PATRICK G. CORSER — NEW MEXICO — 12236 — REGISTERED PROFESSIONAL ENGINEER

DETAIL/SECTION NUMBER — A / 6 6
DRAWING No. WHERE DETAIL/SECTION IS REFERENCED
DRAWING No. WHERE DETAIL/SECTION IS SHOWN

REV No	REVISIONS	DATE	DESIGN BY	DRAWN BY	REVIEWED AND SIGNED BY
0	PART B PERMIT APPLICATION	12/12/97	PGC/JPP	J.BEVER	P.CORSER

TRIASSIC PARK
WASTE DISPOSAL FACILITY

DRAWING TITLE:
CONCRETE AND GRATING DETAILS

TerraMatrix
MONTGOMERY WATSON
Mining Group

Sheet 4 Of 5 Sheets
SCALE: AS NOTED
DRAWING No. 45

AutoCAD FILE: CONC_1.DWG PROJECT NUMBER: 602-0200

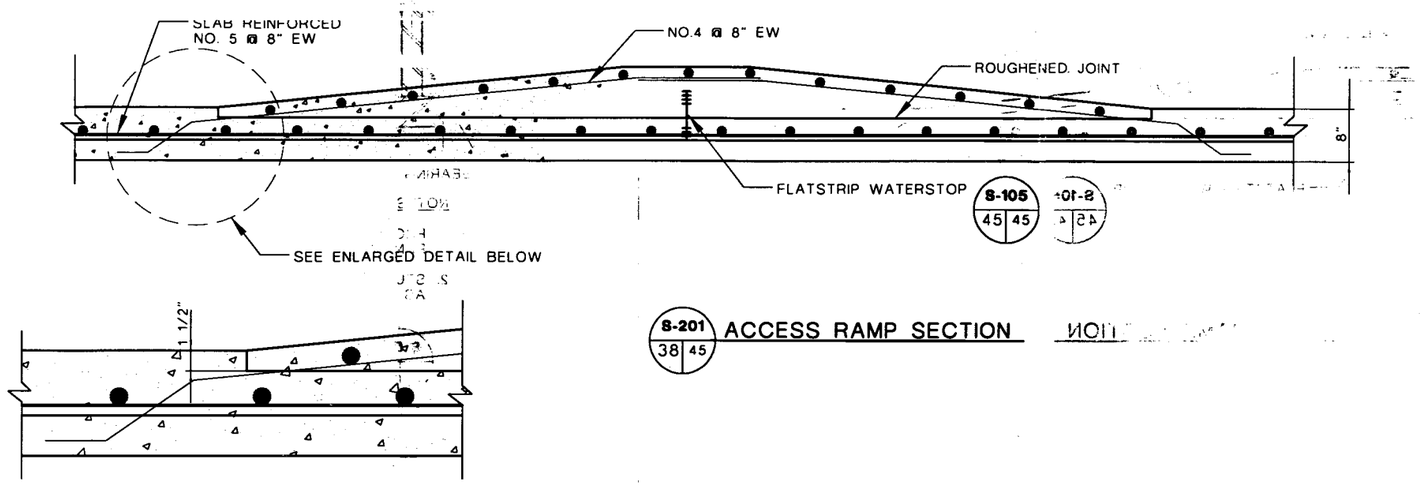

S-201 / 38 45 ACCESS RAMP SECTION

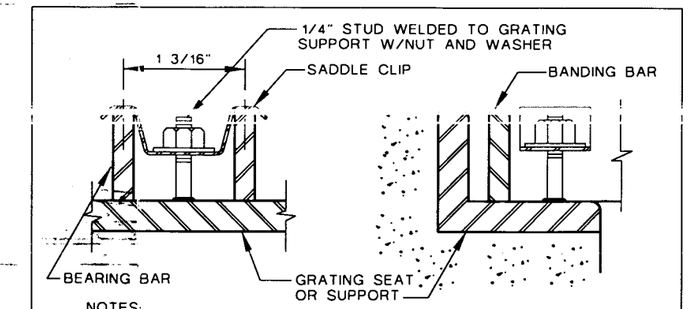

NOTES:

1. PROVIDE 4 CLIPS PER GRATING PANEL, APPROX 4" FROM PANEL CORNERS. MAXIMUM CLIP SPACING AT 36" OC
2. STUD, NUT, WASHER AND CLIP TO BE THE SAME MATERIAL AS THE GRATING EXCEPT FOR ALUMINUM USE SS

S-517 / - 45 GRATING ANCHOR DETAIL

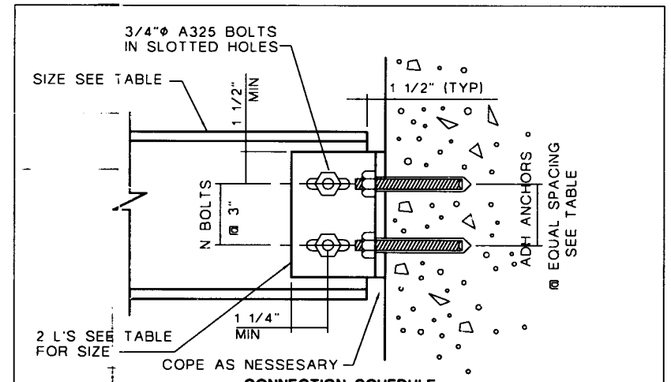

CONNECTION SCHEDULE

BEAM SIZE	ANGLE SIZE	NO. OF BOLTS (N)	ADHESIVE ANCHORS NUMBER AND SIZE
W6	3 1/2 x 3 1/2 x 3/8	2	2 - 3/4" Φ @ 6"

S-563 / - 45 BEAM TO CONCRETE CONNECTION

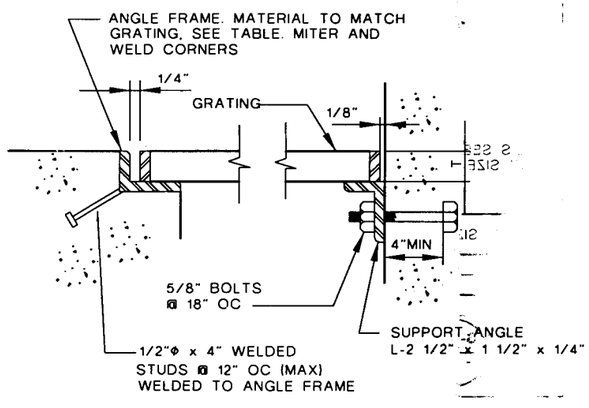

NOTES:

1. GRATING DEPTH TO BE DETERMINED BY MANUFACTURER AND APPROVED BY ENGINEER (UNO)
2. ALL ENDS AND OPENINGS SHALL BE BANDED
3. ALL GRATING SHALL BE SECURED IN PLACE WITH REMOVABLE FASTENERS, SEE DETAIL S-517
4. GRATING SHALL BE DESIGNED FOR A 5-TON FORKLIFT LOAD
5. BEARING BARS SHALL BE DEPTH T x 3/16" @ 1 3/16" OC CROSS BARS SHALL BE @ 4" OC

S-502 / - 45 GALVANIZED STEEL GRATING

USE STEEL ANGLE SUPPORTS AND BOLTS
GALVANIZE AFTER FABRICATION

GRATING FRAME TABLE

GRATING DEPTH T	FRAME ANGLE	GRATING DEPTH T	FRAME ANGLE
1"	1 3/4 x 1 1/4 x 1/4	2"	•2 1/2 x 2 1/2 x 1/2
1 1/4"	2 x 1 1/2 x 1/4	2 1/4"	2 1/2 x 2 1/2 x 1/4
1 1/2"	1 3/4 x 1 3/4 x 1/4	2 1/2"	3 x 2 1/2 x 1/2
1 3/4"	2 x 2 x 1/4		

• OR USE 2 1/2 x 2 1/2 x 1/4 WITH 1/4" SHIM PLATE WELDED TO BOTTOM

NOTE:
FOR GENERAL NOTES AND LEGEND INFORMATION SEE DRAWING No. 2, "INDEX, LEGEND AND GENERAL NOTES".

A / 6 6 — DETAIL/SECTION NUMBER; DRAWING No. WHERE DETAIL/SECTION IS REFERENCED; DRAWING No. WHERE DETAIL/SECTION IS SHOWN

PATRICK G. CORSER — NEW MEXICO — 12236 — REGISTERED PROFESSIONAL ENGINEER

PROFESSIONAL ENGINEER'S STATEMENT

I, Patrick G. Corser, state that this map was prepared under my supervision and all the information presented hereon is true and correct to the best of my knowledge and information.

11/5/98 — Patrick G. Corser, NM P.E. 12236
Date

REV No	REVISIONS	DATE	DESIGN BY	DRAWN BY	REVIEWED AND SIGNED BY
0	PART B PERMIT APPLICATION	12/12/97	PGC/JPP	JBEYER	P.CORSER

TRIASSIC PARK
WASTE DISPOSAL FACILITY

DRAWING TITLE:
CONCRETE AND GRATING DETAILS

TerraMatrix
MONTGOMERY WATSON
Mining Group

Sheet 5 Of 5 Sheets
SCALE: AS NOTED
DRAWING No. 45

AutoCAD FILE: CONC-D.DWG PROJECT NUMBER: 602-0200

PART A AND PART B PERMIT APPLICATION

FOR THE

TRIASSIC PARK HAZARDOUS WASTE FACILITY

Volume III

Engineering Report
Appendix A - Drawings

December 1997
Revised November 1998

Prepared By:

Stoller
established 1959
The S.M. Stoller Corporation
1717 Louisiana Blvd., N.E., Suite 209
Albuquerque, New Mexico 87110
(505) 255-8200

and

TerraMatrix
MONTGOMERY WATSON
Natural Resources Group

1475 Pine Grove Road
P.O. Box 774018
Steamboat Springs, Colorado 80477

Prepared for:

TRIASSIC PARK WASTE DISPOSAL FACILITY
Post Office Box 827
1109 E. Broadway
Tatum, New Mexico 88267

ENGINEERING REPORT

TRIASSIC PARK WASTE DISPOSAL FACILITY
CHAVES COUNTY, NEW MEXICO

December 1997
Revised November 1998

Patrick G. Corser, P.E.
Project Manager

PATRICK G. CORSER
NEW MEXICO
12236
REGISTERED PROFESSIONAL ENGINEER

Prepared by:

TerraMatrix/Montgomery Watson
MONTGOMERY WATSON MINING GROUP
1475 Pine Grove Road, Suite 109
P.O. Box 774018
Steamboat Springs, Colorado 80477
(970) 879-6260

TABLE OF CONTENTS

Section No. **Page No.**

1.0 GENERAL 1-1

1.1 INTRODUCTION 1-1
1.1.1 Background 1-1
1.1.2 Objective and Scope 1-1
1.1.3 Report Organization 1-2
1.2 REGULATORY CRITERIA AND GUIDANCE 1-2
1.3 SUMMARY OF GEOLOGIC AND HYDROLOGIC CONDITIONS 1-2
1.3.1 Regional Conditions 1-3
1.3.2 Site Geology 1-3
1.3.3 Site Hydrogeology 1-3
1.4 ADDITIONAL FIELD AND LABORATORY STUDIES 1-3
1.5 SUMMARY OF CLIMATALOGICAL DATA 1-3

2.0 GENERAL FACILITY DESIGN ELEMENTS 2-1

2.1 GENERAL FACILITY DESIGN ELEMENTS 2-1
2.1.1 General 2-1
2.1.2 Facility Layout 2-1
2.1.3 Facility Traffic Plan 2-2
2.1.4 Facility Stormwater Control 2-4
2.2 GENERAL FACILITY DESIGN ANALYSES 2-6
2.2.1 Road Designs 2-6
2.2.2 Facility Surface Water Control Design Analyses 2-6

3.0 LANDFILL 3-1

3.1 LANDFILL DESIGN 3-1
3.1.1 General 3-1
3.1.2 Landfill Layout and Phasing 3-1
3.1.3 Subgrade Excavation, Liner System, LCRS, LDRS, and Vadose Sump Design 3-2
3.1.4 Waste Filling Sequence 3-5
3.1.5 Interim and Final Covers 3-6
3.1.6 Landfill Stormwater Control Features 3-8
3.2 LANDFILL DESIGN ANALYSES 3-9
3.2.1 Slope Stability 3-9
3.2.2 Settlement 3-11
3.2.3 Geosynthetics Strength and Performance Analyses 3-12
3.2.3.1 Geomembranes 3-12
3.2.3.2 Geocomposites 3-12
3.2.3.3 Geotextiles 3-12
3.2.3.4 Geosynthetic Clay Liner 3-13
3.2.3.5 Geosynthetics Leachate Compatibility 3-13
3.2.4 Sump Compacted Clay Liner 3-14
3.2.5 Anchor Trench Design 3-14
3.2.6 Access Ramp Design 3-14
3.2.7 HELP Modeling 3-15
3.2.8 Leachate Collection and Removal, Leak Detection and Removal, and Vadose Monitoring System Hydraulic Analyses 3-16
3.2.9 Action Leakage Rate and Response Action Plan 3-17
3.2.10 Surface Water Drainage Analyses 3-17
3.2.11 Soil Erosion Analyses 3-18

Section No. **Page No.**

3.2.12 Frost Protection *3-18*
3.2.13 Earthwork Volumetrics *3-18*

4.0 EVAPORATION POND **4-1**

4.1 EVAPORATION POND DESIGN 4-1
4.1.1 General *4-1*
4.1.2 Evaporation Pond Layout and Phasing *4-1*
4.1.3 Subgrade Excavation, Liner System, LDRS Sump Design and Vadose Monitoring Sump Design *4-2*
4.1.4 Evaporation Pond Discharge Pad Arrangement *4-3*
4.2 EVAPORATION POND DESIGN ANALYSES 4-4
4.2.1 Slope Stability *4-4*
4.2.2 Settlement *4-4*
4.2.3 Geosynthetics Strength and Performance Analyses *4-4*
4.2.3.1 Geomembranes 4-5
4.2.3.2 Geonets 4-5
4.2.3.3 Geotextiles 4-5
4.2.4 Compacted Clay Liner *4-6*
4.2.5 Anchor Trench Design *4-6*
4.2.6 Leak Detection and Removal and Vadose System Hydraulic Analyses *4-6*
4.2.7 Action Leak Rate and Response Action Plan *4-6*
4.2.8 Frost Protection *4-7*
4.2.9 Earthwork and Pond Volumetrics *4-7*

5.0 TRUCK ROLL-OFF AREA **5-1**

5.1 TRUCK ROLL-OFF AREA DESIGN 5-1
5.1.1 General *5-1*
5.1.2 Truck Roll-Off Area Layout *5-1*
5.1.3 Subgrade Excavation, Liner System, Drainage Sump Design, and Leak Detection and Removal System Design *5-1*
5.2 TRUCK ROLL-OFF AREA DESIGN ANALYSES 5-3
5.2.1 Geosynthetics Strength and Performance Analyses *5-3*
5.2.1.1 Geomembranes 5-3
5.2.1.2 Geocomposite 5-3
5.2.1.3 Geotextiles 5-3
5.2.2 Anchor Trench Design *5-4*
5.2.3 Stormwater Collection Sump and Leak Detection Sump Containment Hydraulic Analyses *5-4*

6.0 STABILIZATION UNIT **6-1**

6.1 STABILIZATION UNIT DESIGN 6-1
6.1.1 General *6-1*
6.1.2 Stabilization Unit Layout *6-1*
6.1.3 Bin Liner, Bin Vault, and Floor Design *6-2*
6.1.4 Stabilization Process Design *6-2*
6.2 STABILIZATION UNIT DESIGN ANALYSES 6-4
6.2.1 Stabilization Bin Structural Analyses *6-4*
6.2.2 Stabilization Unit Concrete Vault *6-5*
6.2.3 Stabilization Unit Concrete Floor *6-5*
6.2.4 Stabilization Process Analyses *6-6*

7.0 DRUM HANDLING UNIT **7-1**

7.1 DRUM HANDLING UNIT DESIGN 7-1

7.1.3 Subgrade Excavation, Liner System, Leachate Collection Sump, and Leak Detection Sump Design *7-2*
7.2 DRUM HANDLING UNIT DESIGN ANALYSES 7-4
7.2.1 Geosynthetics Strength and Performance Analyses *7-4*
7.2.1.1 Geomembranes 7-4
7.2.1.2 Geonet 7-5
7.2.1.3 Geotextiles 7-5
7.2.1.4 Anchor Trench Design 7-5
7.2.2 Drum Handling Unit Concrete Floor *7-5*

8.0 LIQUID WASTE STORAGE UNIT 8-1

8.1 LIQUID STORAGE UNIT DESIGN 8-1
8.1.1 General *8-1*
8.1.2 Unit Layout *8-1*
8.1.3 Tank Leakage Containment Design *8-1*
8.2 LIQUID WASTE STORAGE UNIT DESIGN ANALYSES 8-2
8.2.1 Tank Design, Testing, and Quality Control Standards *8-2*
8.2.2 Pumping and Piping *8-2*
8.2.3 Concrete Tank Pad *8-2*

9.0 TRUCK WASH UNIT 9-1

9.1 TRUCK WASH UNIT DESIGN 9-1
9.1.1 General *9-1*
9.1.2 Facility Layout *9-1*
9.1.3 Subgrade Excavation, Liner System, Sump and Leak Detection System Design *9-2*
9.2 TRUCK WASH UNIT DESIGN ANALYSES 9-4
9.2.1 Geosynthetics Strength and Performance *9-4*
9.2.2 Tank Design, Testing, and Quality Control Standards *9-4*

10.0 REFERENCES 10-1

LIST OF TABLES

Table No.	Description	Page No.
1	Expected Vehicle Types	2-2
2	Landfill Sump Arrangement Summary	3-5
3	Landfill Phase 1A Material Balance and Ultimate Landfill Material Balance	3-19

LIST OF APPENDICES

Appendix	Description	
A	Design Drawings	
B	Construction Quality Assurance Plan	
C	Construction Specifications	
D	Laboratory Test Results	
E	Engineering Calculations	
	E-1	Cut Slope Stability
	E-2	Protective Soil Layer Stability
	E-3	Phase 1A Filling Plan Stability
	E-4	Ultimate Filling Plan Waste Stability
	E-5	Cover Stability
	E-6	Ramp Stability
	E-7	Evaporation Pond Slope Stability
	E-8	Prepared Subgrade Settlement
	E-9	Subgrade Settlement
	E-10	Effects of Different Settlement on Base Grades
	E-11	Waste Settlement
	E-12	Settlement Induced Stress in Geomembranes
	E-13	Geomembrane Stress Induced by Waste Settlement
	E-14	Evaporation Pond Clay Liner Settlement
	E-15	Anchor Trench Pullout Capacity
	E-16	Geomembrane Survivability
	E-17	Geomembrane Puncture Resistance in Landfill
	E-18	Geomembrane Puncture Resistance
	E-19	Geotextile/Geocomposite Survivability
	E-20	Geotextile/Geocomposite Filtration
	E-21	Puncture Resistance of Geotextile/Geocomposite
	E-22	GCL Material Properties
	E-23	Clay Liner Properties
	E-24	Wheel Loading on Access Ramp
	E-25	Frost Penetration
	E-26	Pipe Crushing
	E-27	Thermal Induced Stress in Evaporation Pond Liner
	E-28	HELP Modeling
	E-29	Facility Road Design
	E-30	Vertical Riser Down Drag
	E-31	Landfill LCRS Sump Flow
	E-32	Truck Roll-Off Area Sump Capacity
	E-33	Stabilization Bin Structural Analysis
F	Surface Water Control Plan	
	F-1	Sediment Demonstration
	F-2	Drainage Control
G	Action Leakage Rate and Response Action Plan	
	G-1	Landfill Action Leakage Rate
	G-2	Evaporation Pond Action Leakage Rate

1.0 GENERAL

1.1 INTRODUCTION

Gandy Marley Inc. (GMI) is submitting a RCRA Permit Application to construct and operate the proposed Triassic Park Waste Disposal Facility (Facility) (EPA ID NO. NM0001002484) to be located in Chaves County, New Mexico. This engineering report prepared by TerraMatrix/Montgomery Watson (TerraMatrix) presents the detailed design of the Triassic Park Waste Disposal Facility submitted in support of the Triassic Park Waste Disposal Facility RCRA Permit Application.

1.1.1 Background

In 1994, Gandy Marley Inc. contracted the S.M. Stoller Corporation to perform site characterization work and to prepare RCRA Permit Application for location of a hazardous waste treatment, storage and disposal facility on a 480 acre parcel of privately owned land located in Chaves County, New Mexico. The proposed site is located in Section 17 and 18 of R31E, T11S that lies approximately 42 miles east of Roswell, New Mexico and 36 miles west of Tatum, New Mexico.

In August 1994, Gandy Marley Inc. contracted with TerraMatrix to prepare preliminary designs for the various site facilities and to assist S.M. Stoller in the preparation of the RCRA Permit submittals. Since that time, S.M. Stoller and TerraMatrix have been working jointly to respond to comments and requests for additional information made by the New Mexico Environmental Department (NMED).

The facility design as presented herein is a product of several design iterations which incorporated additional information and design modifications as requested by NMED.

1.1.2 Objective and Scope

The primary objective of this report is to present the detailed design and engineering analyses required under current NMED regulations in support of the Triassic Park Waste Disposal Facility RCRA Permit Application. This engineering report presents detailed design drawings, construction specifications, construction quality assurance plan, surface water control plan, and supporting engineering analyses and laboratory studies applicable to the following site features and facilities:

- Site Arrangement
- Landfill
- Evaporation Pond
- Truck Roll-Off Unit
- Stabilization Unit
- Drum Handling Unit
- Liquid Waste Storage Unit
- Truck Wash Unit

The report also presents the landfill and evaporation pond action leakage rate and response action plan along with its supporting engineering analyses.

1.1.3 Report Organization

This report is organized into ten sections including this Section 1.0. Sections 2.0 through 9.0 describe the design elements and engineering analyses for the general site arrangement, the landfill, the evaporation pond, the truck roll-off unit, the stabilization unit, the drum handling unit, the liquid waste storage unit and the truck wash unit. Section 10.0 presents a list of references used in the report followed by the report appendices. Appendices A through G (Volumes III-VI) present the detailed design drawings, construction quality assurance plan, construction specifications, laboratory test results, engineering calculations, surface water control plan, and action leakage rate and response action plan.

1.2 REGULATORY CRITERIA AND GUIDANCE

The following Federal and State regulations, as well as Federal guidance documents were used in the design:

New Mexico Hazardous Waste Regulations, 20 NMAC 4.1;

Title 40 -- Code of Federal Regulations (40 CFR), Part 261, 262, 264; 268, & 270.

U.S. Environmental Protection Agency (US EPA), 1984. Permit Applicants Guide Manual for Hazardous Waste Land Treatment Storage and Disposal Facilities

U.S. Environmental Protection Agency, 1988. Lining of Waste Containment and Other Impoundment Facilities, Part 1 of 2 and Part 2 of 2.

U.S. Environmental Protection Agency, 1988. Seminar Presentations - Requirements for Hazardous Waste Landfill Design, Construction and Closure.

U.S. Environmental Protection Agency, 1996. Technical Guidance Document,. Construction Quality Assurance for Hazardous Waste Land Disposal Facilities.

United States Environmental Protection Agency, July, 1990. Seminars - Design and Construction of RCRA/CERCLA Final Covers, Washington, DC.

Additional supporting reference documents are presented in Section 10.

1.3 SUMMARY OF GEOLOGIC AND HYDROLOGIC CONDITIONS

Regional and site geologic and hydrologic conditions are discussed in the Triassic Park Waste Disposal Facility Permit Application (45). This site characterization work was performed by the S.M. Stoller Corporation and is based on a series of exploration drilling and test pit programs conducted at the site and review of New Mexico Oil Conservation Division well logs. One of the results of primary importance to this engineering report stemming from the site characterization report is the identification of the "most favorable area" for the location of the landfill. A brief summary of the site geologic and hydrologic conditions based on the Permit application is presented below.

1.3.1 Regional Conditions

The geologic formations present within the region where the Triassic Park Treatment, Storage, and Disposal Facility (Facility) is situated range from Quaternary through Triassic in age. These include Quaternary alluvium, Tertiary Ogallala Formation, and the Triassic Dockum Group. Permian sediments do not outcrop in this region.

1.3.2 Site Geology

Site stratigraphy generally consists of, from top down, 2 to 20 ft thicknesses of Quaternary alluvial materials; 30 to 100 ft thicknesses of Upper Dockum mudstones, siltstones, and sandy siltstones; and up to 600 ft thicknesses of Lower Dockum mudstones. Permeability testing of mudstone core samples were found to average 2.2 $x10^{-7}$ cm/sec and siltstones averaged 1 x 10^{-4} cm/sec (45).

Based on the regional geologic features, the potential for subsurface subsidence and the occurrence of sinkholes is considered negligible. In addition, there are no identified faults within the project area. The proposed site is located in a geologically stable area with low seismic activity potential. Design ground accelerations of 0.04 g were used in engineering evaluations presented in this report (1).

1.3.3 Site Hydrogeology

Permit Application Section 3.0, Volume I, provides a detailed discussion of the site geology and supporting investigation activities, as well as, site ground water characteristics and supporting ground water flow modeling. Based on these assessments, the "most favorable" area for the landfill construction was identified (see Figure 3-11 of Section 3.0, Volume I). The footprint for the proposed landfill generally conforms to the "most favorable" area. Cross sections shown on Drawing No. 7 (Volume III) show the landfill base and geologic foundation intercepts.

1.4 ADDITIONAL FIELD AND LABORATORY STUDIES

In addition to the site characterization drilling and test pitting programs described above, a test pit program to characterize near surface soil conditions and laboratory studies to identify geotechnical properties of the soils and proposed liner components was conducted. Appendix D, Volume V presents the results of the test pit program, soil index tests, and interface shear tests performed on the soil and geosynthetic liner materials.

1.5 SUMMARY OF CLIMATALOGICAL DATA

Site climatological data was obtained from the National Oceanic and Atmospheric Administration (NOAA) Class A recording station in Roswell, NM. Climate conditions of the area are typical of semi-arid regions characterized by dry, warm winters with minimal snow cover and hot, somewhat moister summers (45).

Moderate temperatures at the Facility are typical throughout the year with annual average temperatures near 60°F. Temperatures in December through February show a large diurnal variation, averaging 36°F at Roswell. On approximately 75 percent of the winter mornings, temperatures are below freezing, and afternoon maximum temperatures in the high fifties.

Afternoon winter temperatures of 70°F or more are common. Nighttime lows average near 23°F, occasionally dipping as low as 14°F. There are perhaps two or three winter days when the temperature fails to rise above freezing.

Precipitation is light and unevenly distributed throughout the year, averaging 10 to 13 inches. Winter is the season of least precipitation, averaging less than 0.6-inches of rainfall per month. Snow averages about 5 inches per year at the site and seldom remains on the ground for more than a day at a time because of the typically above freezing temperatures in the afternoon. Approximately half of the annual precipitation comes from frequent thunderstorms in June though September. Rains are usually brief but occasionally intense when moisture from the Gulf of Mexico spreads over the region. The site has a net evaporation potential with evaporation rates greatly exceeding rainfall. Monitoring records from the Bitter Lake monitoring station between 1951 in 1979 indicate an average evaporation rate of 93 inches per year.

Precipitation for the project area varies greatly from year to year. For example, Roswell's record low annual precipitation is 4.35 inches. The maximum 24 hour rainfall was 5.65 inches in October 1901. The record annual high is 32.92 inches. Most years are either "wet" or "dry"; few are "average". An average precipitation rate for Roswell, for a 107 year period from 1878 to 1982, is 10.61 inches per year.

The prevailing wind direction is from the south with a normal mean wind speed of 9.6 mph at Roswell.

2.0 GENERAL FACILITY DESIGN ELEMENTS

2.1 GENERAL FACILITY DESIGN ELEMENTS

2.1.1 General

General Facility design elements include the overall Facility layout, traffic plan, and site wide stormwater control design. This section describes the site layout and provides rationale for the individual unit locations and roadway network. In addition, the site wide stormwater control feature system is described.

2.1.2 Facility Layout

Drawing No. 4, (Volume III) illustrates the proposed locations of all site units including the site waste receiving, treatment, disposal, and storage units; the site maintenance area; soil stockpiles; surface water control features; water storage basins; and interconnecting access roadways. The location of these units is governed by the landfill layout and construction sequencing, existing roads leading to the Facility, existing topography and surface water drainage, and operational interactions between the waste storage, treatment, and disposal units. Additional rationale for individual unit locations are discussed in the paragraphs below.

Facility entrance and receiving areas including the security gate, administration trailer, truck untarping and sampling stations, chemical laboratory, and truck staging area are located near the Facility entrance in the northeast corner of the site. This arrangement facilitates site access security; incoming waste load inspection, sampling, testing, and weighing; and provides vehicle parking, truck staging, and emergency vehicle access.

Waste processing and storage areas include the drum handling unit, stabilization unit, liquid waste storage unit, and truck roll-off unit. These units are located north of the landfill access. This arrangement will minimize traffic interference between waste processing unit operations, landfill operations, and landfill construction activities. The drum handling unit and liquid waste storage unit are located closest to the Facility entrance because delivery vehicles to these units will not be required to access the landfill or other site units. The stabilization units is located in close proximity to the liquid waste storage unit, drum handling unit, truck roll-off unit, and landfill entrance to facilitate waste transfer operations between these units.

The evaporation pond and truck wash units are located to the northwest of the landfill. This arrangement allows trucks leaving the landfill, which need to be cleaned, to pass through the truck wash and exit the Facility via the northern-most roadway. The evaporation pond location provides space for future evaporation pond development and is located near the truck wash and the landfill leachate tank locations to reduce leachate haul distances.

The Facility maintenance shop area is located next to the truck wash because landfill operations equipment is typically cleaned prior to being serviced by the maintenance personnel. Earthmoving and construction equipment will be able to access the maintenance shop from the south thus reducing interference with site operations traffic and minimizing wear to the perimeter road surface. The stormwater detention basin is located in the northwest corner of the site because this is a natural low point to which clean run-off from the Facility will be directed. Stockpile and clay processing areas are located along the east side of the Facility.

These areas provide adequate soil storage space and allow construction equipment to operate separately from other site operations.

The landfill location is governed by subsurface geologic and hydrogeologic characterization discussed in Section 1.3.3.

2.1.3 Facility Traffic Plan

Drawing No. 26, (Volume III) illustrates the site roadway locations and grades, traffic flow directions, traffic control features, and emergency vehicle access lanes at the Facility entrance. Roadway locations are governed by locations and operations requirements. Expected vehicle types and volumes, proposed road types and their intended uses, traffic control features, and individual unit traffic patterns are discussed below. Road design analyses are discussed in Section 2.2.1.

Table 1, lists the types of vehicles, their gross vehicle weight, and estimated traffic volume per day which will travel on the site roadways. The traffic volumes shown in Table 1 are estimated based on an assumed waste receipt volume. Actual traffic volumes may vary.

TABLE 1
EXPECTED VEHICLE TYPES

Vehicle Type	Off Highway/On Highway	Gross Vehicle Weight (lb)	Estimated Traffic Volume (units/day)
Waste Haulers			
Roll-off Trucks	On Highway	< 100,000 lb	30-70
End Dump Trucks (Bulk Waste)	On Highway	< 100,000 lb	30-70
Tanker Trucks (Liquid Waste)	On Highway	< 100,000 lb	0-5
Semi Trailer Trucks (Drums)	On Highway	< 100,000 lb	0-5
Other Miscellaneous	On Highway	< 100,000 lb	0-5
Trucks	On Highway	< 100,000 lb	0-5
Site Operations Vehicles			
Vacuum Trucks	On Highway	< 100,000 lb	0-5
Tanker Trucks	On Highway	< 100,000 lb	0-5
Roll-Off Trucks	On Highway	< 100,000 lb	10-30
Flat Bed Trucks	On Highway	< 100,000 lb	0-5
Maintenance Vehicles	On Highway	< 100,000 lb	0-5
LF Waste Compactors	Off Highway	< 100,000 lb	0-2
Excavators	Off Highway	> 100,000 lb	0-2
Backhoes	Off Highway	< 100,000 lb	0-2
LF Scrapers	Off Highway	> 100,000 lb	0-2
Water Trucks	On Highway	< 100,000 lb	0-20
Front End Loader	Off Highway	< 100,000 lb	0-2
Fork Lifts	Off Highway	< 100,000 lb	0-2
Construction Vehicles			
Restricted to construction roads			
End Dump Trucks	Off Highway	< 100,000 lb	NA
Water Trucks	On Highway	< 100,000 lb	NA
Compactors	Off Highway	< 100,000 lb	NA
Graders	Off Highway	< 100,000 lb	NA
Dozers	Off Highway	< 100,000 lb	NA
Excavators	Off Highway	< 100,000 lb	NA
Employee Vehicles	On Highway	< 100,000 lb	30-50

Main Facility Roads

Drawing No. 26, (Volume III) identifies the extent of the main Facility roadways. These roads include the Facility entrance, north access road, south access road, and east and west landfill perimeter roads. Drawing No. 27, (Volume III) illustrates the road dimensions, drainage slope, and road surface and subbase material types and thicknesses to be used in construction. The main Facility road network will serve the majority of site traffic into and out of the landfill and the waste processing units. Construction equipment will typically be restricted to construction haul roads and the cut slope access ramp into the landfill.

Unimproved Access Roads and Temporary Construction Haul Roads

Unimproved access roads and temporary construction haul roads (not shown on the drawings) will be constructed as required by site operations and construction contractors. Access roads to the stormwater detention basin, soil stockpile areas, and along the site perimeter fence or along power lines are typical locations for these roads. In general, these roads will be constructed by removing loose materials and vegetation and compacting the underlying soils. No road surface gravels will be placed, however, provisions for surface water drainage, such as culverts and ditches, as well as, erosion control features will be included.

The truck staging area located at the south end of the Facility entrance will provide space for waste haul trucks awaiting disposal approval. This area will be surfaced with gravel and will drain to the surface water detention basin.

Parking areas for site personnel vehicles will be designated near the administration trailer, chemical laboratory, drum handling unit, stabilization unit, and maintenance shop area. These areas are also likely to be gravel surfaced.

Traffic Control Features

Traffic control features incorporated in the site traffic plan include the Facility entrance gate, stop signs, posted speed limits, and warning and informational signs. Temporary road dividers such as K-rails (also known as California rails) are also often used to separate two-way traffic in high volume areas. Stop sign locations, as shown on Drawing No. 26, (Volume III), will serve to control traffic at main roadway intersections and at the various waste processing unit entrances. Speed limits will be posted on all roadways. The main Facility road and unimproved access roads will be posted at 15 mph. Temporary construction haul roads will be posted at 35 mph. Additional signage will be posted to identify restricted areas, unit personal protection equipment (PPE) requirements, truck entrance areas, and unit names and access driveways.

Also shown on Drawing No. 26, (Volume III) are the emergency vehicle access lanes at the Facility entrance. These lanes will remain clear at all times.

Individual Unit Traffic Patterns

The drum handling unit entrance faces the north access road. Incoming trucks will enter the gravel lined apron and will back up to the loading dock areas. Once the truck unloading operation is complete, the trucks will exit the unit via the same north access road. Parking areas for site personnel vehicles will be designated near the drum handling unit office. The

gravel apron in front of the unit will not be used to stage waste haul trucks.

The stabilization unit has entrances for incoming trucks on both the north and south access roads. These accesses will be used for incoming waste trucks loaded with unstabilized waste for processing. Incoming trucks will enter the gravel lined apron on the north or south side of the unit and back into the stabilization building. Once the load has been dumped into the bin and the truck bed washed out, the truck will exit the unit via its entrance route. The east and west building entrances will be used by stabilized waste loadout trucks which will cycle between the truck roll-off unit or the landfill. The gravel lined areas surrounding the stabilization unit will not be used to stage waste haul trucks. Parking areas for site personnel vehicles will be designated near the stabilization unit office.

Access to the liquid waste storage area is provided on the east, west, and north sides of concrete tank pads. Tanker trucks can use either the north access road or the road to the east of the liquid waste storage area.

The truck roll-off area can be accessed via the north or south access roads.

The landfill design incorporates three access ramps. The two northern ramps will be used by waste haul trucks and landfill operations equipment. These 30 ft wide ramps will accommodate 2-way traffic when necessary, however, in general, the east ramp will be used for incoming traffic and the west ramp for exiting traffic. The third ramp located on the southern cut slope will provide access for earthmoving equipment involved with landfill expansion construction activities. Incoming waste haul trucks will be released from the truck staging area and use the south access road and northeast ramp to enter the landfill. Empty haul trucks will exit the landfill via the northwest ramp, pass through the truck wash unit, if necessary, and exit the site via the north access road.

Evaporation pond 1A and 1B truck discharge stations are accessible via the north and south access roads, respectively. Pond 1B will be used predominantly for day to day operations for incoming waste. However, the liquid levels in both ponds will be maintained at approximately the same level to maximize evaporation. Tanker trucks will enter pond 1B discharge station turnout from the west, discharge their load, and can exit the site via the north or south access roads.

2.1.4 Facility Stormwater Control

Facility stormwater control is provided in the design by a network of surface water run-on and run-off diversion ditches and detention basins. These ditches have been designed to collect and contain a 25-year, 24-hour storm event.

Site Vicinity Drainage Pattern

The proposed site is located on the far eastern flank of the Pecos River Basin. The land surface gently slopes to the west at approximately 40 to 50 feet per mile toward the river. The sloping plain is characterized by low relief hummocky wind-blown deposits, sand ridges, and dunes. The Caprock escarpment (or Mescalero Rim) is one of the most prominent topographic features in southeastern New Mexico. East of the proposed site, the escarpment has approximately 200 feet of relief. Up gradient sources of surface water flow are bounded by the Caprock escarpment. The watershed associated with the east diversion channel encompasses an

area of approximately 378 acres beginning at the Caprock escarpment and continuing down to the site's east property line.

Surface Water Run-On Diversion Channels

The east diversion channel located on the eastern edge of the landfill property line provides run-on control from the east watershed area. The remaining topography surrounding the site grades away from the site. The discharge location for this channel coincides with existing natural drainages to the north of the site as indicated on Drawing No. 25 (Volume III), sheet 1 of 2. The east diversion channel will remain in place after the cover system is constructed.

Surface Water Run-Off Channels

To control the run-off from the Facility, several collection ditches and culverts were designed to divert the peak discharge from a 25-year, 24-hour storm event to a stormwater detention basin. The location of the collection ditches (Ditch 1 through 6), culverts, and detention pond are shown on Drawing 25 (Volume III) sheet 1 of 2. Ditches 1 and 2 are located along the inside of the perimeter road at the toe of the final cover slope. The ditches divert run-off from the final cover to ditch 5 located at the northwest corner of the landfill. Ditches 3 and 4 run along the outside edge of the perimeter road. Ditch 3 collects the majority of runoff from the disturbed areas immediately to the east and north of the landfill footprint. Ditch 4 collects run-off from the west and south perimeter road. Both ditches also discharge to ditch 5 at the northwest corner of the landfill. Ditch 5 collects the run-off from ditches 1, 2, 3, and 4 and conveys it to the detention basin. Ditch 6 collects run-off from the facilities located near the entrance to the site and routes it to the detention basin.

Two ditches, Ditches 7 and 8, are located in the Phase I landfill (See Drawing 13, Volume III). These ditches are designed to divert runoff from unlined areas of the landfill to the clean water collection basin located in the south end of the landfill.

Surface Water Detention Basins

There will be three detention basins located on the site. The surface water detention basin located in the northwest corner of the site is shown on Drawing No. 25 (Volume III) sheet 1 of 2. The clean water collection basin located in the toe of the Phase 1A cut slope and the contaminated water basin, which will be located in the lined portion of Phase 1A and will extend from the waste fill slope to the clean water collection basin berm, are shown on Drawing No. 10 (Volume III).

Final Cover

The landfill final grading plan is shown on Drawing No. 22 (Volume III). An access road to the top of the landfill is located along the western side of the landfill. The surface water control ditch adjacent to the road will reduce erosion and control surface run-off of the cover. The ditch dimensions and details are shown on Drawings No. 25, sheet 2 of 2 (Volume III) and 27 (Volume III).

2.2 GENERAL FACILITY DESIGN ANALYSES

2.2.1 Road Designs

Drawing No. 27, (Volume III), illustrates the road dimensions, drainage slope, and road surface and subbase material types and thicknesses to be used in construction. Construction Specification Section 02225, (Appendix C, Volume IV), provides details regarding road construction materials and placement execution. Calculation No. E-29 presented in Appendix E, Volume evaluates the main facility road design and specification relative to the expected traffic conditions identified in Table 1. As described in the calculation, the main facility bearing capacity of 2,000 psf is suitable for the expected traffic loading above.

2.2.2 Facility Surface Water Control Design Analyses

All surface water calculations were conducted utilizing the SEDCAD+ computer model developed by Civil Software Design. Channels were sized based on the Mannings equation for open channel flow. The methodology and assumptions used in the design of the surface water control system are presented in Appendix F, Volume VI. Drawing No. 25, sheet 1 of 2 (Volume III) presents a layout of the surface water control plan and a schedule of channel and culvert dimensions and installation criteria.

Detention Basin Design Analyses

The surface water detention basin is designed to contain the stormwater discharge from the entire active site area given flows from a 25-year, 24-hour storm event. In order to assess the required size of the surface water detention basin, a worst-case stormwater volume discharge area was identified. The worst case scenario assumed that the final cover was in place and the run-off from the entire landfill footprint along with the run-off from the surrounding area are all diverted to the basin. The total drainage area is approximately 265.5 acres. Of the 265.5 acres 44 percent is assumed to be reclaimed and revegetated and the remaining 56 percent is considered to be disturbed. The total run-off was computed to be approximately 51.4 ac-ft. Total volume of the detention pond at the invert of the spillway is 66.1 ac-ft.

Erosion Control

Ditches with flow velocities less than 5 fps from a 25-year event will not require erosion protection. Ditches with peak flow velocities greater than 5 fps from a 25-year event but less than 5 fps from an average storm (2-year event) will also not utilize erosion protection. During average storm events these ditches should be stable, however, during major storm events the ditches may show signs of erosion in some areas. These areas will be repaired as required following all major storm events. Ditches with peak flow velocities greater than 5 fps from an average storm will be lined with gravel or riprap, as needed. All ditches are designed with 0.3 feet of freeboard.

To minimize sediment transport to receiving streams the east ditch will be lined with gravel. The ditch was designed with 0.3 feet of freeboard A riprap apron will be constructed at the end of the east ditch to dissipate the flow before entering the natural channel to help reduce erosion. The location of the apron is shown on Drawing No. 25, sheet 1 of 2 (Volume III). Details of the apron is shown on Drawing No. 25, sheet 2 of 2, (Volume III). Design calculations are shown in Appendix F, Volume VI. Ditches 7 and 8, which direct clean water

runoff on the side slope of the landfill into the water collection basin, will be lined with a high density polyethylene (HDPE) liner.

3.0 LANDFILL

3.1 LANDFILL DESIGN

3.1.1 General

Landfill design elements include ultimate and interim landfill layout and phasing; subgrade design; liner system design; and leachate collection system, leak detection system, and vadose monitoring sump design. This section describes each of these design elements.

3.1.2 Landfill Layout and Phasing

The proposed landfill footprint illustrated on Drawing No. 4 (Volume III), generally conforms to the most favorable area as previously described. The landfill footprint is divided into three phases (Phase I, Phase II, and Phase III) with each phase having a separate leachate collection, leak detection, and vadose detection system. These phases will be further subdivided based on development sequencing and landfill waste receipt rates. Landfill development will proceed from north to south in Phases I and II while Phase III will most likely be constructed in its entirety. The limits of Phase IA, the first area of the landfill to be developed, is shown on Drawing Numbers 8, 9, and 10 (Volume III). Details of the ultimate landfill configuration and the Phase 1A configuration are discussed below.

Ultimate Landfill Configuration

Drawing Nos. 6, 7, and 22 (Volume III), illustrate the ultimate configuration of the landfill. The landfill footprint defined by the crest line encompasses approximately 101 acres. The final cover area, which will extends 20 ft beyond the crest line, is approximately 107 acres. As shown in Drawing No. 23 (Volume III), no waste will be placed outside of the crest line of the landfill and leachate percolating vertically through the waste mass will be contained by the slope and floor liner systems.

The subsurface, or basal, portion of the landfill will be excavated to a depth of approximately 100 ft. At this depth, the floor and sumps of the landfill will be located in the Lower Dockum Unit (Drawing No. 7, Volume III). All side slope angles are 3 horizontal: 1 vertical (3H:1V) and the base in each landfill phase grades approximately 3 percent with a minimum of 2 percent towards its respective sump area. The basal liner system anchor trench is located approximately 4 ft beyond the crest of the landfill (Drawing No. 12, Volume III). Sumps are located at convenient locations in each phase to allow for subphase landfill development, to provide space for access ramps, and to maintain leachate collection system flow lengths capable of detecting a leak in a timely manner.

As shown on Drawing Nos. 7 and 22 (Volume III), the final cover system will reach a maximum elevation of approximately 4,205 ft. The cover system will crest at the mid-point of the landfill and will slope at 6 percent outwards. Slopes around the perimeter of the landfill will be 4H:1V.

Phase 1A Landfill Configuration

Phase 1A landfill development is illustrated on Drawing Nos. 8, 9, 10, and 11 (Volume III).

The basal liner system will cover the entire north 3H:1V slope, the slopes below the access ramps, and most of the Phase 1A floor. Waste placement will occur only on lined areas as shown on Drawing No. 10 (Volume III).

Landfill access ramps located on the east and west sides of Phase 1A grade at 10 percent from the crest to the floor surface. The 30 ft wide ramps can facilitate two way traffic. Drawing No. 14 (Volume III), illustrates the access ramp cross sections when waste placement takes place below the ramps and when waste placement takes place above the ramps.

Drawing No. 13 (Volume III), shows slope run-off diversion ditches located along the access ramps that discharge into a collection basin positioned at the toe of the cut slope. This temporary stormwater control feature will collect run-off from unlined slope areas above the access ramp and from the cut slope area during Phase 1A waste filling and will be separated from Phase IA by a berm which is illustrated in Drawing No 24 (Volume III). Clean water collected in the basin may be used for dust control within the landfill or may be pumped out of the basin and discharged into the site surface water control system.

3.1.3 Subgrade Excavation, Liner System, LCRS, LDRS, and Vadose Sump Design

Subgrade Excavation

Drawing No. 6 (Volume III) shows the landfill excavation and structural fill contours. The crest of the landfill generally follows the site's surface topography which grades from the southeast to the northwest. Fill areas along the south and west sides of the landfill combined with cut areas along the landfill's north side provide sufficient grade differences for perimeter drainage ditches to move stormwater run-off to the detention basin located in the northwest corner of the site. Drawing No. 5 (Volume III) indicates the initial cut and fill areas that would be required for the initial site development. This would require grading around the perimeter of the landfill and in the waste processing areas.

Specification Section No. 02110, Volume IV, describes site preparation, excavated soil classification and stockpiling, subgrade surface preparation and inspection, structural fill placement and compaction requirements, survey and quality control, and erosion control features.

Liner System

Drawing No. 12 (Volume III) shows the landfill liner components intended for the floor, slopes, and anchor trench areas. The landfill liner system is a double lined system consisting of (from bottom up) a prepared subgrade, geosynthetic clay liner (secondary liner), geomembrane (secondary liner) geocomposite (secondary drainage layer) geomembrane (primary liner) geocomposite (primary drainage layer) and a protective soil layer. Details of each component are discussed below:

- *0.5 foot thickness of prepared subgrade*

  The prepared subgrade component will provide a smooth stable surface suitable for placement of overlying geosynthetic materials. Specification Section 02119, Volume IV presents subgrade material requirements including particle size and

moisture content, placement and compaction requirements, and survey and field quality control requirements.

- *16-foot wide compacted clay liner (CCL) around landfill perimeter*

  During excavation, alluvial sands will be exposed around the perimeter of the landfill to depths ranging from 2 to 10 feet. As shown on Drawing No. 23, (Volume III) a 16 foot thickness of this sand material will be removed and replaced with a CCL component. The purpose of the CCL is to provide the liner with enhanced water barrier qualities in the alluvial sand areas. The CCL will be extended into the Upper Dockum Unit to a depth of at least 2 feet. The CCL ($k \leq 1 \times 10^{-7}$ cm/sec) in combination with the overlying GCL described below will serve as a low permeability barrier layer to restrict infiltration of leachate into the subgrade. The CCL will consist of clay material (CL or CH) obtained during excavation of the landfill and evaporation pond. Specification Section 02221, describes clay material requirements including particle size and moisture content, placement and compaction requirements, and survey and field quality control requirements.

- *Geosynthetic Clay Liner (GCL)*

  The GCL will serve as a low permeability ($k \leq 5 \times 10^{-9}$ cm/sec) barrier layer to restrict infiltration of leachate into the subgrade. The GCL type used will consist of bentonite granules sandwiched between two layers of geotextile. Specification Section 02780, describes minimum GCL properties required, subgrade preparation and inspection, material transportation and handling procedures, deployment and seaming requirements, and material construction quality assurance.

- *60-mil thick high density polyethylene (HDPE) geomembrane liner (textured on both sides)*

  The 60-mil HDPE geomembrane placed on top of the GCL is the second component of the secondary liner. Together, the GCL and HDPE geomembrane form a highly efficient barrier layer to restrict percolation of leachate into the subgrade (see Section 3.2.7). HDPE geomembrane texturing increases the friction angle between the geomembrane and the underlying and overlying elements. Specification Section 02775, describes minimum geomembrane properties required, subgrade preparation and inspection, material transportation and handling procedures, deployment and seaming requirements, and material construction quality assurance. Section 3.2.1, discusses slope stability analyses for the landfill liner system.

- *Geocomposite leak detection and removal system (LDRS) (transmissivity $\geq 2.2 \times 10^{-4}$ m^2/sec as tested under actual field conditions) consisting of*:

  * A 7 oz. geotextile (non-woven)
  * A geonet
  * A 7 oz. geotextile (non-woven)

The high transmissivity geocomposite, which is the leak detection and removal layer, provides a means to transmit and remove leachate percolating through any leaks in the primary geomembrane above. The upper and lower geotextiles of the geocomposite serve to filter sediments from the leachate and cushion the geomembranes, respectively. Flow calculations discussed in Section 3.2.8 and presented in Appendix G, Volume VI indicate that the geocomposite, in combination with the centrally located 8 inch diameter drain pipe, are capable of removing leachate in a timely manner such that head on the underlying geomembrane will remain less than 1 foot. Specification Section 02710, describes minimum geocomposite properties required, material transportation and handling procedures, deployment and seaming requirements, and material construction quality assurance (CQA).

The arrangement for the 8 inch diameter drain pipes and surrounding drainage gravel and filter geotextile, which are located in the floor of the leak detection and removal system, are illustrated on Drawing No. 12 (Volume III). Specification Section 02714, Filter or Cushion Geotextile, describes minimum geotextile properties required, material transportation and handling procedures, deployment and seaming requirements, and material CQA.

Calculations demonstrating the leak detection and removal system performance capabilities are presented in Section 3.2.7 and Section 3.2.8.

- *60-mil thick HDPE geomembrane (textured on both sides)*

This HDPE geomembrane serves as the primary liner of the double liner system. Specification Section 02775, discussed above also applies to this geomembrane layer.

- *Geocomposite leachate collection and removal drainage layer (transmissivity $\geq 2.2 \times 10^{-4}$ m^2/sec as tested under actual field conditions) consisting of :*

  * A 7 oz. geotextile (non-woven)
  * A geonet
  * A 7 oz. geotextile (non-woven)

This geocomposite layer serves as the leachate collection and removal system (or primary geocomposite). Leachate percolating through the overlying waste fill will drain through the geocomposite to the central drain pipe and then flow to the leachate collection sump where it will be removed via the slope riser pipes. This material is the same used in leak detection and removal system. The floor drain pipe arrangement is also the same.

Primary geocomposite flow calculations are presented in Appendices E (Calculation No E-28) and G, Volume VI, and the performance demonstrations are provided in the HELP Modeling discussed in Section 3.2.7.

- *2-foot thick protective soil layer*

  A 2-foot thick protective soil layer will be placed above the leachate collection and removal system. The protective soil layer will extend over all lined floor and side slope areas. The purpose of the soil layer is to protect the underlying geosynthetics from damage due to vehicle traffic or from waste debris settlement. Specification Section 02232 describes material requirements including particle size, placement requirements, and survey and field quality control requirements.

Leachate Collection and Removal, Leak Detection and Removal, and Vadose Monitoring Sump Systems

The leachate collection and removal system (LCRS), leak detection and removal system (LDRS), and vadose monitoring systems each have a separate sump from which fluids can be collected and removed. The liner system on the landfill floor continue into the sumps, however, in order to provide adequate volume to efficiently operate removal pumps, a gravel layer is incorporated into each system. Also, because liquids may be present, clay soil liner components have been added below the primary geomembrane liner and below the secondary GCL liner. These clay soil liner elements are added to enhance the barrier qualities of the liner elements in the sump. Drawings describing the sump arrangements in Phase 1A include Drawing Nos. 15, 16, 17, and, 18 (Volume III). As shown on the drawings, the sumps are square pyramidal shapes which lie concentrically above one another. The LCRS, LDRS and Vadose side slope pipes enter their respective sumps at the sump base and are horizontally offset to provide adequate space for the pipe trenches. The pipe trench arrangement enables the vadose and leak detection pipes to penetrate overlying geosynthetic liner elements at the crest of the landfill rather than in the sump area. The LCRS pipe lies on top of the primary geomembrane and therefore no liner penetration is required. Table 2 below lists the dimensions, volumes, flow capacity, slope riser pipe dimensions, pump type and capacity, and fluid level instrumentation included in each of the sumps.

TABLE 2
LANDFILL SUMP ARRANGEMENT SUMMARY

	LCRS	LDRS	VADOSE
Fluid Capacity[1] (gallons)	102,900	16,840	1,965
Pipe Dimensions (length/diameter)	30 ft/18 in	15 ft/18 in	10 ft/12 in
Flow Capacity[2] (gallons per day)	618,480	135,400	For Detection
Pump Type/Capacity[3] (gallons per minute (gpm))	Grundfos/50 gpm	Grunfos/50gpm	Grunfos/20 gpm
Fluid Level Instrumentation	Yes	Yes	Yes

Notes:
[1] 0.3 x neat volume accounts for gravel space
[2] Determined from Dupuit-Forchheimer equation for flow from the sump gravel to collection pipe
[3] Expected pump type and flow capacity for side slope riser.

LCRS Vertical Riser

In addition to the LCRS side slope pipe, the LCRS sump also has a vertical riser pipe which will extend from the LCRS through the waste fill and final cover system to the surface. The vertical riser is a redundant design feature which provides additional access to the LCRS sump whereby a second pump can be added to rapidly increase leachate removal rates. As shown on Drawing Nos. 17 and 20 (Volume III), the vertical riser arrangement consists of two pipes and two vertical riser pipe bases. The innermost pipe is a 18 inch diameter stainless steel pipe which rests on HDPE flatstock and extends from the bottom of the LCRS sump through an opening in the concrete vertical riser foundation above. Because this pipe is not attached to the concrete foundation, any settlement that the concrete incurs will not be transferred to the pipe. The concrete vertical riser foundation rests on the LCRS gravel and provides support for the second pipe which will extend through the waste fill to the surface. This pipe is wrapped with a double layer of HDPE geomembrane. This arrangement isolates the pipes from the surrounding soils which reduces down drag forces resulting from waste settlement. Calculations which evaluate the down drag forces and bearing capacity of the concrete vertical riser foundation are included in Appendix E (Calculation No. E-30), Volume VI.

Crest Riser Pad Arrangement

Drawing No. 19, (Volume III) illustrates the LCRS, LDRS, and Vadose slope riser piping and valving, the double lined 9,000 gallon polyethylene tank (poly tank) system for leachate storage, and the crest risen pad. Also indicated are high and low level tank cutoff switches, flexible piping connections between the inner and outer poly tanks, the fluid level sight gauge, 50 gpm leachate discharge pump and control panel locations.

The double lined poly tank consists of two tanks, one inside of the other. The inner tank will have a capacity of 9,000 gallons and the outer tank will have a minimum capacity of 15,500 gallons. Liquids containing solvents such as MEK, toluene, xylene, diesel, or gasoline in concentrations greater than 15 percent will not be placed in the tanks. Tank tie down details will be developed from manufacturer's shop drawings when the tank is purchased.

The concrete crest riser pad will slope towards the landfill crest. Should a catastrophic failure of the tank or piping system occur, leachate will flow back into the landfill leachate collection and removal system rather than be released to unlined areas. The landfill liner system anchor trench will completely encompass the pad so that any leakage through the pad will also drain back into the landfill leachate collection and removal system. Construction details for the concrete containment pad are called out in Specification Section 03100, Section 03200, Section 03290, and Section 03300.

3.1.4 Waste Filling Sequence

As mentioned previously in Section 3.1.2, landfill development will begin in Phase IA, proceed southward into Phase II, and then finish in Phase III. The extent of landfill subphases will be based on waste receipt rates.

Liner installation in Phase IA will take place in two stages: the slope and floor area below the access ramps and the slope area above the access ramps. Once the waste fill approaches the limits defined in Drawing No. 10 (Volume III), the cut slope will be advanced southward into Phase II and the remaining floor and slope areas of Phase I will be lined. The contaminated

water basin in the base of Phase I will also be removed and re-established in Phase II. Waste filling in Phase I will continue during this liner expansion. As the waste fill extends beyond and above the access ramps, a ramp will be established in the south waste fill slope to provide access to the newly lined floor areas of Phase I. Detailed planning for Phase II and Phase III liner installation, access ramp location, and waste fill sequencing will be determined in the future, however, the ultimate landfill configuration will be maintained.

Waste filling will take place in 5 to 10 foot thick horizontal lifts. Waste will be covered with daily cover soil as soon as practicable following waste placement (and minimally at the end of each operating shift). Daily cover soil thicknesses will range from 0.2 to 0.5 ft.

3.1.5 Interim and Final Covers

Because landfill development and waste filling will take place in stages depending on waste receipt rates, ultimate waste fill heights may not be achieved early in the life of the landfill. For example, in order to achieve maximum fill heights in Phase I, Phase II below grade filling will necessarily have to be substantially complete. A similar situation will occur between Phase II and Phase III in order to reach maximum fill heights in Phase II. To reduce stormwater infiltration and promote clean water run-off from inactive fill areas within the landfill, interim cover over the waste will be established. Interim cover will consist of a 1.5 foot thickness of cover soil.

The interim soil cover will be inspected following rain events for rills or other erosion features and will be regraded if necessary. Run-off from interim cover areas will drain to the landfill's perimeter drainage ditch system and flow to the site stormwater detention basin. Alternatively, if deemed necessary by the owner, a geosynthetic cover consisting of a light weight sacrificial HDPE geomembrane could also be placed on top of the soil cover to shed rain water. When waste placement commences in the interim cover area, the geosynthetic cover can be used in a new location or left in place. Excess interim soil cover which has not come in contact with waste material can be used as daily cover during the new waste placement operation.

Drawing Nos. 21, 22, and 23 (Volume III) illustrate the landfill's ultimate waste fill configuration and final cover design. The final cover system is a composite cover consisting of (from top down) a vegetative cover, a geocomposite drainage layer, a geomembrane layer, a geosynthetic clay layer, a prepared subgrade layer, and a cover soil layer. Details of each component of this 4.5 foot thick protective system are discussed below.

- *2.5-foot thick vegetative cover*

  The vegetative cover will provide a substrate for plant growth on the cover surface and protect the underlying geosynthetics from frost and sun exposure damage. Establishment of plant growth will enhance evapotranspiration of precipitation that soaks into the vegetative cover and will reduce soil erosion due to rainwater runoff. Specification Section 02227, discusses vegetative cover material requirements including particle size and moisture content, placement and compaction requirements, and survey and field quality control requirements. Specification Section 02900, identifies seed mixtures, site preparation, and planting requirements for cover vegetation.

- *Geocomposite (transmissivity $\geq 2 \times 10^{-4}$ m^2/sec) consisting of :*

  * A 7 oz. geotextile (non-woven)
  * A geonet
  * A 7 oz. geotextile (non-woven)

  The high transmissivity geocomposite to transmit and remove precipitation percolating through the vegetative cover above. The upper and lower geotextiles of the geocomposite serves as a drainage layer to filter sediments from the rainwater and cushion the geomembrane below. Flow calculations discussed in Section 3.2.7 and presented in Appendix E, Volume VI (Calculation No. E-28) indicate that the geocomposite, in combination with the vegetative cover above, is capable of removing 99 percent of the precipitation falling on the cover. Specification Section 02710, describes minimum geocomposite properties required, material transportation and handling procedures, deployment and seaming requirements, and material CQA.

- *60-mil thick HDPE geomembrane (textured on both sides)*

  The 60-mil HDPE geomembrane placed below the geocomposite drainage layer and on top of the GCL is the primary barrier layer of the cover system. Together with the underlying GCL, the HDPE geomembrane forms a highly efficient barrier layer to restrict percolation of rainwater into the waste fill (see Section 3.2.7). HDPE geomembrane texturing serves to increase the geocomposite/geomembrane/GCL friction angles to enhance slope stability. Specification Section 02775, interface describes minimum geomembrane properties required, subgrade preparation and inspection, material transportation and handling procedures, deployment and seaming requirements, and material CQA.

- *Geosynthetic clay liner (GCL)*

  In conjunction with the overlying HDPE geomembrane, the GCL will serve as a low permeability ($k \leq 5 \times 10^{-9}$ cm/sec) barrier layer to restrict infiltration of precipitation runoff into the waste fill. The GCL type used will consist of bentonite granules sandwiched between two layers of geotextile. Specification Section 02780, describes the minimum GCL properties required, subgrade preparation and inspection, material transportation and handling procedures, deployment and seaming requirements and material construction quality assurance.

- *6-inch thick prepared subgrade layer*

  The prepared subgrade component will provide a smooth stable surface suitable for placement of overlying geosynthetic materials. Specification Section 02119, presents subgrade material requirements including particle size and moisture content, placement and compaction requirements, and survey and field quality control requirements.

- *1.5-foot thick protective soil layer*

  The protective soil layer placed on the surface of the waste fill serves to isolate the waste and any near surface debris from the overlying cover elements and also provides a base for the prepared subgrade layer. Specification Section 02226, presents material requirements including particle size and moisture content, placement and compaction requirements, and survey and field quality control requirements.

As shown on Drawing No. 23 (Volume III) the final cover system will extend 20 ft outside the crest of the landfill. In addition, the waste fill terminates inboard of the crest line. Rainwater that percolates through the vegetative cover will flow in the cover system's geocomposite layer to the 6" perforated, corrugated, polyethylene pipe located in the cover anchor trench. The water will then be discharged to the landfill perimeter drainage ditch system. Rainwater that percolates through the cover system and comes in contact with the waste will flow vertically downward and be captured in the LCRS.

Drawing No. 22 (Volume III) indicates the location of the cover access road and surface water diversion ditches. Traffic on the cover access road will be limited to light vehicles such as pick up trucks. Surface water drainage ditches on the cover are included to reduce runoff flow lengths and thereby reduce surface soil erosion. Sections 3.2.10 and 3.2.11 discuss ditch sizing and cover soil erosion, respectively.

Waste settlement impacts on the 6 percent and 4H:1V cover slopes are discussed in Section 3.2.2.

3.1.6 Landfill Stormwater Control Features

Drawing Nos. 13, 14, 22 and 25 (Volume III) illustrate the landfill's stormwater control features designed to contain and control rainwater run-off and run-on for a 25 year, 24 hour storm event. These features include the landfill's collection basin, contaminated water basin and slope run off drainage ditches, cover system drainage ditches, perimeter drainage ditch, and the culverts and drainage ditches leading to the stormwater detention basin.

During the Phase IA waste filling, runoff from the slope areas above the access ramps and from the cut slope area will be diverted to the HDPE lined water collection basin located near the toe of the cut slope on the floor of the landfill. HDPE lined diversion ditches located on the side of the access ramps will carry slope run-off to the collection basin. The landfill perimeter ditches located on either side of the perimeter road will intercept run-off from areas outside of the landfill and divert this water to the stormwater detention basin.

Once waste filling reaches elevations above the landfill crest, interim soil cover (and/or interim geomembrane cover) will be placed on outer fill slopes. Rainwater run-off from the clean slope cover will flow into the perimeter ditch system and flow to the stormwater detention basin.

During the operational period, when the final cover system is partially installed in some areas and waste filling continues to take place in other areas, run-off from the final cover will be diverted to the stormwater detention basin. Following the post closure period, after the effectiveness of the landfill cover has been demonstrated, the stormwater detention basin will be removed from service and the area will be regraded to its approximate predisturbance state.

Run-off from the landfill cover will be allowed to flow into the natural drainages which existed prior to construction.

Section 3.2.10 summarizes surface water calculations performed to size the landfill's stormwater control features. The calculations are presented in Appendix F, Volume VI.

3.2 LANDFILL DESIGN ANALYSES

3.2.1 Slope Stability

Cut Slope Stability

Prior to filling, unsupported cut slopes will exist on all sides of the landfill. These slopes were analyzed for static and dynamic stability using the Janbu Simplified Method. A computerized slope stability program (XSTABL) (44) was used to analyze the cut slopes. Strength parameters used for soil and rock materials were estimated using design overburden pressures and plasticity index data gathered from laboratory testing of site soil materials correlated to published data (46). The material properties used in the analyses are summarized in Calculation No. E-1, presented in Appendix E, Volume V.

The site grading plans (Drawing Nos. 5 and 6), Volume III indicate that the maximum cut slopes will be 3H:1V and maximum height will be approximately 100 feet. Results for the critical 3H:1V slope indicate a static factor of safety of 1.4 for the critical short term (undrained) condition. Stability during seismic loading was estimated by applying a pseudo-static earthquake force in the Janbu analysis. Results based on the 0.04 g design acceleration indicate a dynamic factor of safety of 1.2 for the short term (undrained) condition.

Waste Fill Stability

Waste fill stability was considered for both the Phase 1A and ultimate landfill configurations. In both cases a face failure through the waste and along the lining system, and a basal failure along the lining system was considered. The analysis assumed a 4H:1V waste fill slope and floor at design base grades. The Sarma analysis method was used to calculate factor of safety and acceleration coefficient (Kc). Kc is the net acceleration that would have to be applied to a slide mass to initiate movement.

Phase 1A Waste Fill Stability

Critical inputs for the Phase 1A stability analysis were as follows:

- *GCL, saturated undrained condition: friction angle = 2° and C=440 psf*

  Based on testing performed by Geosyntec Inc. using actual site soils and a needle punched GCL, the critical failure interface under saturated conditions occurs in the bentonite layer between the geotextile components of the GCL. It should be noted that this value is highly conservative since the GCL is most likely to remain in an unsaturated state during the life of the landfill. Additionally, the type of GCL tested was the needle punched variety. Other types of GCLs with stitching between the geotextile components offer substantially greater interface shear strengths.

- *Design ground acceleration = 0.04 g*
- *Waste friction angle ϕ = 29°(29)*
- *Design fill configuration shown on Drawing No. 10 (Volume III)*

Results of the Phase 1A analyses presented in Calculation No. E-3, Appendix E, Volume V, indicated a static factor of safety of 1.5 and a dynamic factor of safety of 1.0. These factors of safety are considered acceptable for the interim fill configuration of Phase 1A.

Ultimate Landfill Configuration Waste Fill Stability

The ultimate landfill configuration analyses used the same liner interface strength inputs as the Phase 1A evaluation and the final waste configuration shown on Drawing No. 22 (Volume III). Results of the ultimate configuration waste fill stability analyses presented in Calculation No. E-4, indicated a static factor of safety of 3.7 and a dynamic factor of safety of 1.5. These factors of safety are considered acceptable for the ultimate waste fill configuration.

Protective Soil Layer Stability

An infinite slope model approach was used to evaluate the stability of the protective soil layer on the 3H:1V landfill slopes which considered the loading scenario of the protective soil layer only, and a loading scenario with a D6 dozer (9.8 psi track loading [16]) on top of the protective soil. The analysis considered saturated and undrained soil conditions. The soil/geotextile interface shear strength was based on a friction angle of 31° and an adhesion of 15 psf obtained from interface shear tests. Results of the analyses indicated a static factor of safety of 2.0 for the soil only case and a static factor of safety of 1.8 for the case with the dozer loading. Both factors of safety are considered acceptable. Results of these analyses are presented in Calculation No. E-2, Appendix E.

Cover Stability

The cover system stability analysis focused on two potential failure mechanisms: a deep block failure through the waste and along the basal liner system, and an infinite slope failure within the cover system. Both stability analyses were conducted for static and dynamic conditions assuming undrained soil conditions. The block failure analysis assumed a zero head condition on the liner system while the infinite slope failure analyses considered a zero head condition and a head condition of 2.5 ft in the cover. As with other stability analyses, a design ground acceleration of 0.04g, waste friction angle of 29°, and liner interface strength of δ = 2° and a = 440 psf was assumed.

Results of the analyses indicated a static factor of safety of 2.8 and dynamic factor of safety of 1.5 for the deep block failure. The infinite slope analyses indicated a static factor of safety of 10.9 and dynamic factor of safety of 6.5 for the zero head condition and a static factor of safety of 5.2 and dynamic factor of safety of 3.1 for the 2.5 ft. head condition. All of these factors of safety are considered acceptable. Results of this analysis are presented in Calculation No. E-5, Appendix E, Volume V.

3.2.2 Settlement

Subgrade Settlement

Total settlement of the landfill base due to settlement of the subgrade and prepared subgrade layers was calculated to ensure that the base liner grades did not fall below EPA's recommended minimum of 2 percent.

Subgrade settlement was modeled assuming the subgrade behaves as an elastic medium (30). This assumption implies that any settlement occurs during placement of a given load. Therefore, settlement in the subgrade should occur during the operating life of the landfill and post-closure settlement should be negligibly small. The most important parameter used in this analysis is the elastic modulus of the subgrade. The elastic modulus used was 72,000 ksf which was obtained from conservative estimates for unweathered mudstone (32). The maximum calculated settlements near the center of the landfill are expected to be on the order of 5 inches. Settlement should progressively decrease towards the toe of the sideslopes. These settlements are not expected to result in any excessive stress in the liner system. Details of the subgrade settlement analysis are presented in Calculation No. E-9, in Appendix E.

Final Cover Grades Due to Waste Settlement

As previously mentioned, waste placed at the Facility will consist of hazardous waste which contains no free liquids. All drummed solid material and lab packs will be stacked horizontally in rows within the landfill and the voids between drums filled with compacted bulk wastes. Bulk waste filling will take place in 5 to 10 foot thick horizontal lifts. Waste will be covered with daily cover soil as soon as practicable following waste placement (and minimally at the end of each operating shift). Daily cover soil thicknesses will range from 0.2 to 0.5 ft.

EPA guidelines suggest a minimum of 3 percent for final cover grades on hazardous waste landfills. The proposed 6 percent initial design cover grade was analyzed to determine the maximum settlement factor to maintain the final 3 percent grade. The calculated maximum settlement factor was 7 percent. The analysis assumed that the waste settlement is uniform. Calculation No. E-11, presents waste settlement computations in Appendix E, Volume V.

EPA estimates, based on finite element modeling, indicate that settlement factors of 11.5 percent are appropriate for hazardous waste landfills (38). This model considered that the most significant portion of the waste would be solidified material buried in steel drums, with the drums having a maximum allowable void space of ten percent. This model may not be applicable to the Facility because there should be less void space in the waste than that assumed for the model.

In order to mitigate this potential discrepancy between the suggested 11.5 percent and 7 percent, the post-closure waste settlement of Phase I should be monitored. The monitoring results will be compared to the estimated settlement factor of 7 percent. If settlement is greater than 7 percent, cover grades of subsequent phases will be steepened to accommodate the settlement and maintain the minimum 3 percent final grade.

3.2.3 Geosynthetics Strength and Performance Analyses

3.2.3.1 Geomembranes

Settlement Induced Stress

The maximum settlement will occur at the base of the cell slopes where the waste load is highest. The subgrade settlement is estimated to be approximately 0.5 feet. This settlement will vary from this calculated maximum at the slope toe to zero at the slope crest. Resulting stresses of 65 psi in the geomembrane are much lower than the 2200 psi geomembrane yield stress. Differential settlement is therefore not expected to damage the liner (34). Details of the liner stress analysis are presented in Calculation No. E-12, Appendix E, Volume V.

Thermal Induced Stress

Due to the 2-foot thick protective soil layer above the liner, the 60-mil HDPE geomembrane liner will not be subject to extended periods of contraction and expansion from daily temperature differentials. Temperature restrictions for installation of geomembrane are discussed in Specification Section 02775.

Tear and Puncture

All geomembranes in the landfill liner and cover system are overlain by at least one layer of geotextile. Review of the puncture resistance of the geotextiles indicates a worst case factor of safety of 3.5 (see Calculation No. E-17 and Calculation No. E-21, Appendix E, Volumes V and VI). Therefore, the proposed 60-mil HDPE is adequate to resist puncture stresses.

3.2.3.2 Geocomposites

The geocomposite is intended to act as a lateral drainage layer in both the LCRS, LDRS, and cover system. The geonet in the core of the geocomposite is the drainage media and the overlying and underlying geotextile act as filters. The primary design criteria of the geocomposite is the transmissivity. As part of the design process the typical transmissivity values reported in the literature and by manufactures have been reduced to account for clogging of the geotextile, penetration of the geotextile in to the geonet and creep of the geonet.

In order to confirm the actual transmissivity of the material that arrives on the site, the specifications require that the material be tested as part of the conformance testing program. The specific test methods, including backing materials, normal loads, seating times, gradients, and test durations are detailed in the specifications and meet actual design conditions.

3.2.3.3 Geotextiles

Geotextile Filtration

Geotextiles are used in a number of locations in both the liner and cover sections for filtration. Specifically, the geotextiles act as filters between the clay liners and drainage layers or between the drainage gravel material, protective soil cover, general fill and a drainage layer. All of the soil materials expected to be used for either the liners, covers, protective soil cover or general

fill are conservatively expected to be fine grained with more than 50 percent of the material passing the Number 200 sieve.

The design criteria outlined by Task Force 25 (31) indicated that for soil material with more than 50 percent passing the #200 sieve, the apparent opening size (AOS) of the geotextile should be less than 0.297 mm. The current geotextile specifications require that the AOS is less than 0.212 mm. Therefore, the geotextile should adequately retain any of the onsite soils. Calculation E-20 in Appendix E, Volume VI, compares specified material AOS values to site soil analyses results.

Geotextile Cushion

The puncture resistance during installation of the proposed geotextile materials was analyzed. The analysis, which used standard design equations (33), was based on the maximum ground pressure exerted by construction equipment, the largest average aggregate size that will be in contact with the geotextile, and the minimum puncture strength properties specified in the construction specifications contained in Appendix C, Volume IV. Based on these parameters the calculated safety factor for puncture is 3.6, which is acceptable (see Calculation No. E-21, Appendix, Volume VI).

3.2.3.4 Geosynthetic Clay Liner

No specific design analyses were conducted on the GCL other than determining the interface friction angle of the material in the liner and cover section. The GCL has a specified permeability of $5x10^{-9}$ cm/sec which exceeds EPA's criteria of $1x10^{-7}$ cm/sec. Detailed specifications for the GCL are presented in the construction specifications (Appendix C, Volume IV). The critical parameters for the GCL will be confirmed through a conformance testing program on the material that is delivered to the site.

3.2.3.5 Geosynthetics Leachate Compatibility

Specific leachate compatibility tests have not been conducted on the soil or geosynthetic liner components for the Facility. These tests have not been conducted at this time, because the specific manufacture of the liner components has not been selected and there is not a representative leachate available for testing. The following manufactures, but not limited to, will be considered to provide geosynthetics for landfill construction:

- Agru/America Inc.
- Columbia Geosystems Ltd.
- GSE Lining Technology Inc.
- National Seal Co.
- Poly-Fex Inc.
- Raven Industries Inc.
- S.D. Enterprise Co. Ltd.
- Serrot Corp
- Solmax Geosynthetics, Inc.

EPA, as shown in Section 1.0, recommends that compatibility testing be done on the specific (manufacture and resin type) liner materials selected for use in a facility and a representative leachate for the facility. Therefore, it is proposed that testing be completed prior to

construction once the geosynthetic materials have been selected. Since the facility will not be in operation, a representative leachate will not be available. However, as recommended by EPA (55), market studies can be used to characterize expected waste streams and a synthetic leachate can be developed for use in compatibility testing.

Although compatibility has not been completed, it is expected that the geosynthetic materials selected for the liner, LCRS and LDRS for the Facility have a long track record of successful use at a variety of waste disposal facilities (both municipal waste and hazardous waste) across the United States. Therefore, it is not expected that there will be any compatibility issues that would impact the current design. However, as mentioned above, site specific testing will be completed and the results submitted to NMED for approval prior to construction.

3.2.4 Sump Compacted Clay Liner

In the sump base a compacted clay liner will be placed in addition to a GCL layer. The compacted clay liner (CCL) will provide an added thickness to the liner in the area of the sump where leachate is expected to have the longest resident time and the largest head. The specifications for processing, placement, and compaction are detailed in the specifications. The placement criteria in terms of moisture content and dry density is defined by a window with limits defined by the zero air voids curve, a percent saturation line, a minimum dry density and a minimum moisture content. A graph indicating these specific limits is presented in the specifications which were based on actual laboratory testing conducted as part of this study (Appendix C, Volume IV). This method of specifying a compaction window for a CCL is recommended by EPA and is detailed in a article by Prof. Craig Benson (12).

As part of the CQA program samples of the material to be used as the compacted clay liner will be obtained and tested to confirm the permeability criteria ($k \leq 1 \times 10^{-7}$ cm/sec) can be met. In addition, samples will be taken from the in-place liner to confirm the permeability.

3.2.5 Anchor Trench Design

The pullout capacity of the primary and secondary geosynthetics from the landfill anchor trench was determined. It was assumed the geosynthetics will pull out of the trench with single-sided shear. Single-sided shear is believed to occur rather than double-sided shear because there is less shearing resistance for single-sided shear. Assumed interface friction angles were based on previous laboratory testing for similar materials at low normal stresses. Based on the trench geometry, critical HDPE geomembrane properties, and assumed interface friction angles, both the secondary and primary geomembranes will pull out prior to tearing. Stability calculations for both the secondary and primary geomembranes systems indicate that there are no net downslope forces on the anchor trench because the liner systems are held in place by friction (see Calculation No. E-15, Appendix E, Volume V).

3.2.6 Access Ramp Design

Calculation No. E-24, presented in Appendix E, Volume VI evaluated the puncture resistance of the geomembrane on the landfill access ramps. The ramps grade at 10 percent from the crest of the landfill to the floor. Drawing No. 14 (Volume III), shows the access ramp configuration during initial Phase 1A filling below the ramps and the final configuration after the slope areas above the ramp are lined.

The ramp section consists of the following components (from top down):

- 1 ft thickness of roadbase material
- 12 oz cushion geotextile (enveloping the top and sides of the underlying subbase)
- 2 ft thickness of subbase material
- Basal liner geosynthetics (geocomposite/60 mil HDPE geomembrane/geocomposite/ 60 mil HDPE geomembrane/GCL/prepared subgrade)

The calculation considered a Caterpillar 631 scraper which weighs approximately 168,000 lbs when fully loaded (16). A factor of safety of 4.6 against puncture of the HDPE geomembrane was calculated and is considered acceptable for this loading condition.

An assessment of the stability of the access ramp liner system under breaking forces from a loaded scraper was also analyzed (34). This analysis utilized the strength parameters from the interface shear testing program. The results presented in Calculation No. E-6, Appendix E, Volume V indicate a factor of safety of 4.3 against sliding on the ramp.

3.2.7 HELP Modeling

Hydrologic Evaluation of Landfill Performance (HELP) (41) modeling was performed to demonstrate equivalency of the proposed Facility landfill liner and cover system with EPA's Minimum Technology Requirement (MTR) systems. This demonstration was submitted to NMED for review and was subsequently approved by NMED on March 11, 1996 and EPA on March 14, 1996. The report entitled, *Triassic Park Hazardous Waste Landfill Alternative Liner System Analyses (Revision 1)*, dated March 1996 presents the HELP modeling performed and is reproduced in Calculation No. E-28, Appendix E, Volume VI.

The HELP modeling approach used to evaluate the hydrologic performance of the proposed landfill liner and cover alternative follows the NMED's Draft Guidance Document for Performance Demonstration for an Alternative Liner Design Using the HELP Modeling Program Under the New Mexico Solid Waste Management Regulations (20 NMAC 9.1). This approach was selected because it allows a direct comparison between MTR liner system and an alternative liner system. The results can be used to demonstrate performance equivalency required under 40 CFR 264.301(d).

The conclusions of the HELP modeling as stated in the report are as follows:

- There is little difference between the proposed alternative and MTR in terms of percolation rates through the bottom liner over the life of the facility. The differences that exist in Years 0 through 10 are insignificantly small. The proposed alternate liner performance can therefore be considered equivalent to the MTR liner performance.

- Hydraulic pressure on the primary and secondary liners of both the MTR and proposed alternate liner system is well below the regulatory maximum of 12 inches.

- The cover system leakage is less than or equal to the leakage of the liner system. It effectively reduces precipitation infiltration which will allow the waste to drain once the cover is in place.

3.2.8 Leachate Collection and Removal, Leak Detection and Removal, and Vadose Monitoring System Hydraulic Analyses

Analyses performed to evaluated the effectiveness of the LCRS, LDRS, and Vadose Monitoring Systems are discussed below. Also discussed are slope and vertical riser pipe strength evaluations and the concrete crest riser foundation analyses.

Leachate Collection and Removal System Analyses

Based on HELP modeling data presented in *Triassic Park Hazardous Waste Landfill Alternative Liner System Analyses (Revision 1),* dated March 1996, maximum LCRS flow rates of 116.8 gallons per acre per day (gpad) for slope areas and 50.9 gpad for floor areas occur during year 11 of the simulated facility life. For Phase 1A, which has a slope surface area of 7.9 acres and floor surface area of approximately 3.4 acres, this totals to approximately 1,100 gpd. Calculation No. E-31, Appendix E, Volume VI estimates the flow capacity of the LCRS sump design to be approximately 618,000 gpd (based on Dupuit-Forchhiemer Equation [11]).

The flow capacity of the LCRS sump far exceeds the flow rates delivered from the LCRS as determined from the HELP modeling. A Grundfos 50 gpm pump which has the capacity to remove 72,000 gpd is recommended for the LCRS sump. In addition, should flow rates into the LCRS increase beyond those predicted by the HELP modeling or the capacity of the 50-gpm pump, a second leachate removal pump can quickly be added via the vertical riser system, thus increasing the leachate removal rates.

Leak Detection and Removal System Analyses

Adequacy of the leak detection and removal system for Phase 1A is addressed in the Landfill action leakage rate calculation presented in Appendix G (Volume VI). In this calculation, leakage rates into the LDRS, as determined by EPA's recommended method, were compared to flow capacities of the LDRS geocomposite drainage layer and the LDRS sump. Based on these calculations, the flow capacity of the LDRS sump exceeds the flow capacity of the LDRS geocomposite drainage layer and the flow capacity of the LDRS geocomposite drainage layer exceeds the leakage rate into the LDRS. A Grundfos 50 gpm pump which has the capacity to remove 72,000 gpd is recommended for the LDRS system sump.

Vadose Monitoring System Analyses

The vadose monitoring sump serves as a detection system for leakage of the secondary LDRS system. A Grundfos 25 gpm pump is recommended for vadose monitoring sump. In the unlikely event that a leak develops in the LDRS sump, leachate will flow to the vadose monitoring sump where it can be collected and removed.

Evaluation of Slope Riser Pipe and Vertical Riser Pipe Strengths

Calculation No. E-26, presented in Appendix E, Volume VI considers the stresses and deflections to the slope riser pipes. Based on this calculation, the 18 inch diameter HDPE SDR 11 slope riser pipe ring deflection at maximum burial depths of 160 ft is 0.4 percent. This is less than the manufacturer's recommended ring deflection limit of 2.7 percent (39).

The downdrag loads on the vertical riser pipe were evaluated in Calculation No. E-30 Appendix E, Volume VI to determine if the vertical riser pipe could damage the liner. The vertical downdrag loads are developed as a result of waste settlement around the vertical pipe. In order to limit the downdrag loads acting on the liner, the lower portion of the vertical riser was de-coupled from the upper portion. The upper portion was founded on a large concrete foundation that is located on top of the LCRS sump gravel. In addition, a friction break consisting of a double wrap of HDPE geomembrane was included around the steel vertical riser pipe.

3.2.9 Action Leakage Rate and Response Action Plan

Because of the similar liner components used in the landfill and the evaporation pond a single Action Leakage Rate (ALR) and Response Action Plan (RAP) was developed which includes both facilities. This plan and its supporting calculations are presented in its entirety in Appendix G, Volume VI. The results are summarized below.

An Action Leakage Rate (ALR) and RAP for the proposed Facility landfill is required under 40 CFR Parts 264.302. The ALR, as defined in the final rule published in January 29, 1992, is the maximum design flow rate that the LDRS may remove without the fluid head on the bottom liner exceeding one foot. The RAP describes the steps to be taken in the event the ALR is exceeded in landfill. The RAP specifies the initial notifications, steps to be taken in response to the leakage rate being exceeded, and follow-up reports.

The EPA recommended method for determining the landfill ALR presented in Federal Register Vol. 57, as used to calculate the ALR for the landfill facility. Using the flow equation for geonets and applying field representative geocomposite transmissivities and appropriate factors of safety for geonet creep and sediment clogging, the recommended ALR for the landfill was determined to be 900 gpad.

The ALR value of 900 gpad is above the EPA recommended value of 100 gpad. The primary reason for this difference is that the EPA value is based on a sand drainage layer with a permeability of 1×10^{-2} cm/sec compared to the geocomposite drainage layer transmissivity of 2.2×10^{-4} m^2/sec proposed for the landfill.

Additional computations to check the LDRS sump capacity and LDRS drainpipe capacity are also presented in the Appendix G, Volume VI.

Response Action Plan steps outlined in the Action Leakage Rate and Response Action Plan closely follow the recommended actions presented in Federal Register Volume 57, No. 19.

3.2.10 Surface Water Drainage Analyses

Design parameters for HDPE geomembrane ditches lined 7 and 8 located above the landfill access ramps are presented on Drawing No. 25, Sheet 1 of 2 (Volume III). The methodology, assumptions, and run-off calculations for these channels and the collection basins discussed below and are presented in Appendix F, Volume VI.

The clean water collection basin located at the toe of the 2H:1V cut slope in the south end of landfill will contain the run-off from the 15 acres of unlined area of Phase 1A. The total run-

off from the 25-year, 24-hour event is approximately 4.5 ac-ft. Total volume of the collection basin assuming 1 foot of freeboard is 5.2 ac-ft.

The collection area at the toe of the Phase 1A waste fill slope is designed to contain the run-off from the entire 15.6 acre fill area of Phase 1A. The total run-off from a 25-year, 24-hour event is approximately 4.3 ac-ft. Total volume of this collection area, assuming 1 foot of freeboard, is approximately 10.4 ac-ft.

3.2.11 Soil Erosion Analyses

Due to the temporary nature of the 2H:1V cut slope and the 3H:1V subgrade slopes above the access ramps, severe soil erosion of these slope areas is not anticipated. The 2H:1V cut slope will be excavated during future landfill construction and the 3H:1V subgrade areas above the access roads will be conditioned prior to liner placement as required in the specifications.

Erosional features such as rills and localized slumping in exposed areas of the protective soils layer on the 3H:1V slope areas will be repaired following rain events.

3.2.12 Frost Protection

The maximum frost depths in the Roswell area, indicates that frost may reach 23 inches during the winter months. In addition, site-specific frost penetration modeling for the site indicated a maximum design freezing depth of 2.3 feet for this cover. Recent studies by Kraus (36) evaluating the effects of frost on geosynthetic clay liners indicate that there is little change in the permeability of the GCLs due to frost. Since the landfill utilizes GCLs in combination with a HDPE geomembrane as barrier elements for both the liner system and the cover system, frost damage to these layers is not expected. However, the 2.5-foot thick vegetative layer on the cover system will also provide frost protection for underlying geosynthetics and soil components in the cover section, two feet of protective soil is specified on the side slopes of the landfill. Due to the relatively short time period that the side slopes will be exposed without waste placement, the 2-foot cover thickness is considered adequate.

3.2.13 Earthwork Volumetrics

Table 3 lists the material quantities for subgrade excavation, structural fill, cover and liner soil components, and the net waste airspace available for Phase 1A development. Table 3 also lists material quantities for the final landfill configuration.

TABLE 3
LANDFILL PHASE 1A MATERIAL BALANCE
AND ULTIMATE LANDFILL MATERIAL BALANCE

	LOOSE OR COMPACTED CUBIC YARDS	BANK CUBIC YARDS
Material Balance Phase 1A		
Design Capacity		
Total Airspace		691,540 bcy
Liner Area		14.5 acres
Cover Area (Top of Waste)		11.9 acres
Volume of cover (NOT included in airspace)		0 bcy
Volume of Liner (NOT included in airspace)		0 bcy
Remaining Airspace		691,540 bcy
Volume of Daily Cover (20% of total)		138,308 bcy
Total Waste Capacity		**553,232 bcy**
Total Soil Requirements		
Volume of Daily Cover (20% of total)	170,119 lcy	138,308 bcy
Volume of Liner Material (0.5 foot)	92,194 ccy	83,813 bcy
Volume of Cover (4 feet)	718,385 ccy	653,077 bcy
Total Volume of Soil Required		875,198 bcy
Total Cut Volume		2,797,921 bcy
Cut/Fill Balance Difference		**1,922,723 bcy**
Material Balance Ultimate Landfill		
Design Capacity		
Total Airspace		13,997,654 bcy
Liner Area		103.9 acres
Cover Area (Top of Waste)		101.2 acres
Volume of cover (NOT included in airspace)		0 bcy
Volume of Liner (NOT included in airspace)		419,063 bcy
Remaining Airspace		13,578,591 bcy
Volume of Daily Cover (20% of total)		2,715,718 bcy
Total Waste Capacity		**10,862,873 bcy**
Total Soil Requirements		
Volume of Daily Cover (20% of total)	3,340,333 lcy	2,715,718 bcy
Volume of Liner Material (0.5 foot)	92,194 ccy	88,813 bcy
Volume of Cover (4 feet)	718,385 ccy	653,077 bcy
Total Volume of Soil Required		3,452,608 bcy
Total Cut Volume		10,281,466 bcy
Cut/Fill Balance Difference		**6,828,858 bcy**

Notes: 1) lcy = 1.23 bcy
2) ccy = 1.1 bcy

4.0 EVAPORATION POND

4.1 EVAPORATION POND DESIGN

4.1.1 General

The purpose of the evaporation pond is to store and evaporate liquid wastes which meet land ban restrictions. The majority of these liquid wastes will be leachates collected from the landfill LCRS or other containment sump systems on site. The pond may receive leachates from other off-site sources.

Evaporation pond design elements include pond layout and phasing; subgrade design; liner system design; and leak detection system and vadose monitoring sump design. This section describes each of these design elements.

4.1.2 Evaporation Pond Layout and Phasing

The proposed evaporation pond area layout and phasing is illustrated on Drawing Nos. 28 and 30 (Volume III). Pond 1 will be constructed initially and will service site operations during waste filling of landfill Phase IA. Future Pond 2 will provide additional pond storage capacity as the landfill expands into Phases II and III. Space has been allocated in the site layout to the east of Future Pond 2 should demand for pond storage capacity increase beyond that currently provided in the design.

Ponds 1 and 2 are each divided into two separate ponds, A and B. This arrangement provides separate pond units which can be placed into service independently. For example, in the event of a major rain event or should the Pond 1A primary liner begin to leak, additional pond storage capacity available in Pond 1B could immediately be brought on line. Each pond unit is equipped with its own discharge station. An inter-pond transfer pump will be located on separation berm between the A and B pond units. Provisions to curtail placement of liquid wastes into an impoundment that has exceeded its ALR are discussed in Appendix G, Volume VI.

Pond units 1A, 1B, 2A, and 2B are 132-ft wide by 285-ft long by 12-ft deep and each will provide approximately 1.63 million gallons of useable storage capacity (excluding 2-foot freeboard volumes). Side slope angles are 3H:1V except for the inter pond berms which have 2H:1V sideslopes. Leak detection and vadose monitoring sumps are located centrally on the long side of the pond units. Pond floor grades are a minimum 2 percent towards the sumps.

Pond overtopping will be controlled manually through the use of liquid elevation indicators placed in the pond. These indicators will be graduated vertical rods fixed to a stable base. The rods will be placed such that graduated markings can be easily read from the discharge station. The rods will be surveyed when placed and checked by survey periodically to ensure accuracy. Correlation charts between elevation and pond volume will be maintained at the discharge station of each pond. Pond discharge pipes will also be equipped with flow meters so that liquid volumes placed in the pond can be continuously tracked and documented. Filling of the ponds above the 2-foot freeboard limit will not be allowed. Site personnel will be present during all fluid discharge and transfer operations to ensure that pond overtopping does not occur in the event of equipment malfunction or other human error.

Due to the small aerial extent of the evaporation ponds and limited fetch distance, wave action developed in the pond fluid surface will also be limited. The 2-ft freeboard distance will accommodate minimal wave action without overtopping.

4.1.3 Subgrade Excavation, Liner System, LDRS Sump Design and Vadose Monitoring Sump Design

Subgrade Excavation

Drawing No. 28 (Volume III) shows the evaporation pond excavation contours. The crest of the evaporation pond is essentially flat. Fill areas around the perimeter of the ponds along with site grading outside of the pond area provide sufficient grade differences for stormwater run-off to flow to the perimeter road ditches and ultimately to the stormwater detention basin located in the northwest corner of the site.

Specification Section No. 02110 describes site preparation, excavated soil classification and stockpiling, subgrade surface preparation and inspection, structural fill placement and compaction requirements, survey and quality control, and erosion control features.

Liner System

Drawing Nos. 31 and 32 (Volume III) show the evaporation pond liner components on the floor, slope, and anchor trench areas. The evaporation pond liner system is a double lined system consisting of (from bottom up) a composite (compacted clay and geomembrane) secondary liner, a geonet leak detection and removal system layer, and a primary geomembrane liner. Details of each liner component are discussed below:

- *3-foot thick compacted clay liner (CCL)*

  The CCL ($k \leq 1x10^{-7}$ cm/sec) in combination with the overlying HDPE geomembrane will serve as a low permeability barrier layer to restrict infiltration of leachate into the subgrade. The CCL will consist of clay material (CL, CH) obtained during excavation of the landfill and evaporation ponds. Specification Section 02221 describes clay material requirements including particle size and moisture content, placement and compaction requirements, and survey and field quality control requirements.

- *60-mil thick high density polyethylene (HDPE) geomembrane liner (smooth)*

  The 60-mil HDPE geomembrane placed on top of the CCL is the second component of the composite secondary liner. Together, the CCL and HDPE geomembrane form a highly efficient barrier layer to restrict percolation of leachate into the subgrade (see Section 3.2.7, HELP Modeling). Specification Section 02775 describes minimum geomembrane properties required, subgrade preparation and inspection, material transportation and handling procedures, deployment and seaming requirements, and material CQA.

- *Geonet leak detection and removal system layer (transmissivity ≥ $5x10^{-3}$ m^2/sec as tested under actual field conditions)*

  The high transmissivity geonet leak detection drainage layer provides a means to transmit and remove leachate percolating through any leaks in the primary geomembrane layer above. Flow calculations discussed in Section 4.2.7 and presented in Appendix G, Volume VI indicate that the geonet is capable of removing leachate in a timely manner such that head on the underlying geomembrane will remain less than 1 foot. Specification Section 02712 describes minimum geonet properties required, material transportation and handling procedures, deployment and seaming requirements, and material construction quality assurance.

- *60-mil thick high density polyethylene (HDPE) geomembrane liner (smooth)*

  This HDPE geomembrane serves as the primary barrier layer of the double liner system. Specification Section 02775 discussed above also applies to this geomembrane layer.

Since portions of this liner component will be permanently exposed to sunlight and UV radiation, it may be necessary to replace it prior to the end of the facility life. The lifetime of exposed geomembrane liners varies, however, it is generally limited to the warranty period of the product which may be as long as 20 years (33). The staged approach to pond development will help alleviate this concern, as will maintaining fluid levels near capacity in the primary use pond unit. Periodically alternating pond units for primary use will also reduce exposure time.

Leak Detection and Removal and Vadose Monitoring Sump Systems

The leak detection and removal, and vadose monitoring systems each have a separate sump from which fluids can be collected and removed. The liner systems on the landfill floor continue into the sumps, however, in order to provide adequate volume to efficiently operate removal pumps, a gravel layer is incorporated into the drainage systems. Drawing No. 32 (Volume III) illustrates the sump layout and cross section. As shown on the drawings, the sumps are square pyramidal shapes which lie concentrically above one another. The slope riser pipe trenches, which contain the LDRS and vadose pipe, enter their respective sumps at the sump base. The slope riser trench arrangement enables the vadose and LDRS slope riser pipes to penetrate overlying geosynthetic liner elements at the crest of the landfill rather than in the sump area. The LDRS and removal sump has a total fluid capacity of 1,790 gallons (after accounting for gravel). Similar to the landfill LDRS sump, the evaporation pond sump will be equipped with fluid level instrumentation and a 50 gpm fluid removal pump. The vadose monitoring sump has a total fluid capacity of 95 gallons (after accounting for gravel).

4.1.4 Evaporation Pond Discharge Pad Arrangement

Drawing No. 31 (Volume III) illustrates the LDRS and vadose piping and valving, the discharge pipe arrangement, and the layout for the concrete containment pad. Tanker trucks will pull up next to the concrete pad and hook up to the desired piping system. Hose connections at the pipes are located within the concrete pad area to contain any leakage. The concrete containment pad slopes towards the evaporation pond crest. Should a catastrophic failure of

the piping system occur, leachate will flow back into the evaporation pond rather than be released to unlined areas. The evaporation pond liner system anchor trench will completely encompass the pad so that any leakage through the pad will also drain back into the evaporation pond. Construction details for the concrete containment pad are called out in the Construction Specification Section 03100, Section 03200, Section 03290, and Section 03300 found in Volume IV.

Stormwater Control Features

Drawing No. 4 (Volume III) depicts the surface grades around the perimeter of the evaporation pond area. Surface water run off from these areas will flow to the roadway ditch system and ultimately to the stormwater detention basin.

4.2 EVAPORATION POND DESIGN ANALYSES

4.2.1 Slope Stability

Cut Slope Stability

Prior to filling, unsupported cut slopes will exist on all sides of the evaporation pond. These slopes were analyzed for static and dynamic stability using the Bishop method of slices. A computerized slope stability program (XSTABL) (44) was used to analyze the cut slopes. Strength parameters used for soil and rock materials were estimated using pocket penetrometer data gathered during test pitting of the site soil materials. The material properties used in the analyses are summarized in Calculation No. E-7, Appendix E, Volume V.

The site grading plans (Drawing Nos. 28 and 29, Volume III) indicate that the maximum cut slopes will be 3H:1V and 2H:1V and maximum height will be approximately 12 feet. Results for the critical 2H:1V slope as presented in Calculation E-7, indicate a static factor of safety of 19.8 for the critical short term (undrained) condition. Stability during seismic loading was estimated by applying a pseudo-static earthquake force in the Bishop analysis. Results based on the 0.04 g design acceleration indicate a dynamic factor of safety of 15.7 for the short term (undrained) condition.

Slope stability was not considered for the filled evaporation pond configurations. Filling the pond with fluid does not place any stresses on the liner system which could cause instability.

4.2.2 Settlement

The evaporation pond will experience relatively low overburden pressures due to its shallow depth and liquid fill density in comparison to pressures previously imparted to the clay during placement compaction. Clay liner consolidation will therefore be negligible.

4.2.3 Geosynthetics Strength and Performance Analyses

As discussed in Sections 4.2.1 and 4.2.2 above geosynthetics components of the evaporation pond will not experience significant stresses related to slope stability or settlement. Settlement induced stresses to evaporation pond geosynthetics were, therefore, not considered.

4.2.3.1 Geomembranes

The general use of geomembranes in the evaporation pond is similar to that described for the landfill. Thermal induced stress and tear and puncture evaluations are discussed below.

Thermal Induced Stress

The 60-mil HDPE geomembrane liner will be subject to contraction and expansion from daily temperature differentials. The contraction/expansion potential of the HDPE geomembrane liner was determined, and the maximum induced stress was determined. Calculation No. E-27, In Appendix E, Volume VI indicates the maximum induced thermal stress in the liner would be 560 psi. This value is far below the 2200 psi minimum yield strength of liner, which yields a design safety factor of 3.9.

Tear and Puncture

The evaluation of geomembrane tear and puncture in the landfill liner system was presented in Section 3.2.3.1. The results of these analyses indicated that the 60-mil HDPE geomembranes were adequate for loading conditions which were much more severe than those expected for the evaporation pond. Since similar HDPE products will be used in the evaporation pond and the same subgrade surface preparation methods are required by the specifications, separate calculations for evaporation pond geomembrane tear and puncture are not necessary.

4.2.3.2 Geonets

The geonet is intended to act as a lateral drainage layer in the evaporation pond LDRS. The primary design criteria of the geonet is the transmissivity. Calculations presented in Appendix G-2, Volume VI evaluate the typical transmissivity values reported in the literature and by manufactures. These values have been reduced to account for clogging of the geotextile, penetration of the geotextile into the geonet and creep of the geonet.

In order to confirm the actual transmissivity of the material that arrives on the site, the specifications require that the geonet be tested as part of the conformance testing program. The specific test methods, including backing materials, normal loads, seating times, gradients, and test durations are detailed in the specifications.

4.2.3.3 Geotextiles

Geotextile Filtration

Geotextiles are used in a number of locations in both the liner and sump sections for filtration. Specifically, the geotextiles act as filters between the pipe bedding material or between the sump drainage gravel. Similar to the landfill evaluation, if these soil materials are conservatively estimated to be fine grained with more than 50 percent of the material passing the Number 200 sieve, then the specified geotextile with a AOS of less than 0.212 mm should adequately retain these soils.

Geotextile Cushion

The puncture resistance during installation of the proposed geotextile materials was analyzed for more severe conditions in the landfill design. Therefore, these calculations are not repeated for the evaporation pond application.

4.2.4 Compacted Clay Liner

As previously discussed for the sump CCL, the criteria for the CCL materials characteristics and the placement and compaction criteria are presented in the specifications.

4.2.5 Anchor Trench Design

The pullout capacity of the primary and secondary geosynthetics from the evaporation pond anchor trench was determined. It was assumed the geosynthetics will pull out of the trench with single-sided shear. Single-sided shear is believed to occur rather than double-sided shear because there is less shearing resistance for single-sided shear. Assumed interface friction angles were based on previous laboratory testing for similar materials at low normal stresses. Based on the trench geometry, critical HDPE geomembrane properties, and assumed interface friction angles, pullout resistance calculations for both the secondary and primary liner anchor trenches indicate that the HDPE geomembranes will pull out prior to tearing (see Calculation No. E-15, Appendix E, Volume V).

4.2.6 Leak Detection and Removal and Vadose System Hydraulic Analyses

The leak detection and removal system design and performance is very similar to the landfill system. Therefore, design analyses for the following criteria are not discussed. Rather the reader is referred to Calculation E-28, Appendix E for the detail of the calculations.

Adequacy of the leak detection and removal system for the evaporation pond is addressed in the Action Leakage Rate calculation presented in Action Leakage Rate and Response Action Plan (see Section 4.2.7 below and Appendix G, Volume VI). In this calculation, leakage rates into the LDRS, as determined by EPA's recommended method, were compared to flow capacities of the LDRS geonet drainage layer and the LDRS sump. Based on these calculations, the flow capacity of the LDRS sump exceeds the flow capacity of the LDRS geonet drainage layer and the estimated leakage rate into the LDRS. A Grundfos 50 gpm pump which has the capacity to remove 72,000 gpd is recommended for the LDRS system sump.

Vadose Monitoring System Analyses

The vadose monitoring sump serves as a detection system for leakage of the secondary LDRS system. A Grundfos 25 gpm pump is recommended for vadose monitoring sump. In the unlikely event that a leak develops in the LDRS sump, leachate will flow to the vadose monitoring sump where it can be detected and removed.

4.2.7 Action Leak Rate and Response Action Plan

Because of the similar liner components used in the landfill and the evaporation pond a single ALR and RAP was developed which includes both facilities. This plan and its supporting calculations are presented in its entirety in Appendix G, Volume VI. The results are

summarized below.

An ALR and RAP for the proposed Facility evaporation pond is required under 40 CFR Parts 264.302. The ALR, as defined in the final rule published in January 29, 1992, is the maximum design flow rate that the LDRS may remove without the fluid head on the bottom liner exceeding one foot. The RAP describes the steps to be taken in the event the ALR is exceeded in the evaporation pond. The RAP specifies the initial notifications, steps to be taken in response to the leakage rate being exceeded, and follow-up reports.

The EPA recommended method for determining the landfill ALR was used to calculate the ALR for the evaporation pond. Using the flow equation for geonets and applying field representative geonet transmissivities and appropriate factors of safety for geonet creep and sediment clogging, the recommended ALR for the evaporation pond was determined to be 1000 gpad.

Although computations indicated a much higher ALR value could be justified, the ALR value of 1000 gpad, which is equal to the maximum EPA recommended value of 1000 gpad, was selected because this value adequately represented a "large and rapid" leak considering the small size of the evaporation ponds.

Additional computations to check the LDRS sump capacity and LDRS drainpipe capacity are also presented in the Appendix G, Volume VI.

4.2.8 Frost Protection

Based on the landfill design, the design depth of frost at the site could be in the range of 2.3 feet (see Calculation No. E-25, Appendix E, Volume VI). Review of the evaporation pond design indicates that portions of the clay liner above the pond fluid level may be exposed to frost action. The following paragraph discusses resulting effects this may have on leakage to the environment.

Unlike the landfill, the evaporation pond is a temporary facility to be removed from service during the facility's post closure period. Increased permeability of the clay liner and any resulting leakage is therefore, not as critical as with a permanent landfill installation. Further, due to the insulating affects of the pond liquids, only portions of the clay liner above the fluid level in the pond will reach freezing temperatures. Finally, the evaporation pond design incorporates a vadose detection system and a leak detection and removal system. Any leakage detected will be removed and if large enough, based on the action leakage rate, will cause remedial steps to be taken to locate and repair damage to the geomembrane, thus limiting exposure of fluids to the clay liner. Therefore, in our judgment, any increase in permeability of the clay liner due to potential damaging effects of frost will not result in significant increases of liquids released to the environment.

4.2.9 Earthwork and Pond Volumetrics

Approximately 62,500 cy of soil materials will be excavated to construct evaporation ponds 1 and 2. Clay liner construction will require placement of 22,150 cy of compacted clay liner material. The resulting pond volume available for liquid storage and evaporation (not including 2 ft of freeboard) is approximately 6.5 million gallons.

5.0 TRUCK ROLL-OFF AREA

5.1 TRUCK ROLL-OFF AREA DESIGN

5.1.1 General

It should be noted that the incoming trucks containing nonstabilized waste will be Department of Transportation (DOT) approved roll off vehicles (17). These trucks are required by DOT to be covered. Additionally, the roll-off container must be free of leaks and the waste must be contained with a plastic bed liner. Together, the roll-off container and the plastic bed liner are considered a double lined system. This containment system will remain in place the entire period the roll-off container is staged in the truck roll-off area. The liner system incorporated in the nonstabilized waste roll-off area is included as a precautionary measure.

It should also be noted that the roll-off containers staged in the unlined roll-off area will contain stabilized waste which has met the paint filter tests for free liquids. Additionally, these roll-off containers will be lined using a plastic bed liner and will be covered in a manner similar to DOT approved roll-off containers.

The purpose of the truck roll-off area is to provide a staging area for incoming roll-off containers with nonstabilized waste destined for the stabilization facility and a second staging area for roll-off containers with post treatment stabilized waste awaiting landfill disposal approval.

Truck roll-off area design elements include truck roll-off area layout, subgrade design; liner design; and drainage sump design. This section describes each of these design elements.

5.1.2 Truck Roll-Off Area Layout

Drawing Nos. 41 and 42 (Volume III) illustrate the layout of the truck roll-off unit. Each is approximately 290 ft long by 170 ft wide roll-off cell can stage approximately 44 roll-off containers. The floor of each cell grades at 2 percent towards its respective sump and the surrounding soil berms have side slopes of 3H:1V and range in elevation from 6 ft to 10 ft. Cell access is provided by four ramps which grade at 10 percent.

The west cell, to be used for nonstabilized waste, will have a geomembrane underliner with an overlying geocomposite drainage layer, subbase, and road base. The east cell, to be used for stabilized waste, will have a structural fill and road base surface layer only.

5.1.3 Subgrade Excavation, Liner System, Drainage Sump Design, and Leak Detection and Removal System Design

<u>Subgrade Excavation</u>

Drawing No. 41 (Volume III) shows the truck roll-off area excavation and fill contours. Cut areas in the central portion of the facility are made to achieve the required floor grades. The berms and fill areas around the perimeter of the truck roll-off area and surrounding site grading provide sufficient grade differences for stormwater run-off to flow to the perimeter road ditches and ultimately to the stormwater detention basin.

Specification Section No. 02110 (Appendix C, Volume IV) describes site preparation, excavated soil classification and stockpiling, subgrade surface preparation and inspection, structural fill placement and compaction requirements, survey and quality control, and erosion control features.

Liner System

Drawing No. 43 (Volume III) shows the liner components on the floor, berm, and anchor trench areas. The truck roll-off area for roll-off containers with nonstabilized waste is a single lined system consisting of (from bottom up) a prepared subgrade, a HDPE geomembrane liner, a geocomposite drainage/filter layer, a subbase layer, and a road base surface. Details of each liner component are discussed below.

- *0.5 ft thickness of prepared subgrade*

  The prepared subgrade component will provide a smooth stable surface suitable for placement of overlying geosynthetic materials. Specification Section 02119, (Appendix C, Volume IV) presents subgrade material requirements including particle size and moisture content, placement and compaction requirements, and survey and field quality control requirements.

- *60-mil thick high density polyethylene (HDPE) geomembrane underliner (smooth)*

  The 60-mil HDPE geomembrane liner placed on top of the prepared subgrade form a highly efficient barrier layer to restrict percolation of rainwater into the subgrade. Specification Section 02775 (Appendix C, Volume IV) describes minimum geomembrane properties required, subgrade preparation and inspection, material transportation and handling procedures, deployment and seaming requirements, and material construction quality assurance.

- *Geocomposite (transmissivity $\geq 2.2 \times 10^{-4}$ m^2/sec) as tested under actual field conditions*

  The high transmissivity geocomposite provides a means to transmit and remove rainwater falling within the nonstabilized waste roll-off bin area. Flow calculations in Calculation No. E-28, Appendix E indicates that the geocomposite is capable of removing rainwater so that ponding can be minimized and trafficability of the upper gravel surface can be maintained. Specification Section 02710, Appendix C, Volume IV describes minimum geocomposite properties required, material transportation and handling procedures, deployment and seaming requirements, and material CQA.

- *1.5 ft thickness of subbase*

  The subbase will consist of free draining soils classified as SM, SW, GM, of GW. Specification Section 02230 (Appendix C, Volume IV) presents material requirements including particle size and moisture content, placement and compaction requirements, and survey and field quality control requirements.

- *0.5 ft thick road base*

  The road base gravel surface will allow stormwater to drain from the surface while providing sufficient bearing capacity for truck traffic. Specification Section 02225 (Appendix C, Volume IV) presents material requirements including particle size and moisture content, placement and compaction requirements, and survey and field quality control requirements.

Drainage Sump System

The drainage sump will collect stormwater run off from the floor of the truck roll-off area. The liner systems on the truck roll-off area continue into the sump, however, in order to provide adequate volume to efficiently operate the removal pump, a gravel thickness has been incorporated into the drainage systems. Drawing Nos. 41, 42, and 43 (Volume III) illustrates the sump layout and cross section. The LCRS slope riser pipe enters the sump at the sump base. The sump has a total fluid capacity of 1,406 gallons (after accounting for gravel). The truck roll-off area drainage sump will be monitored visually to determine whether pumping is required. Fluid removal will be performed by a vacuum truck.

5.2 TRUCK ROLL-OFF AREA DESIGN ANALYSES

5.2.1 Geosynthetics Strength and Performance Analyses

5.2.1.1 Geomembranes

The evaluation of geomembrane puncture in the truck roll-off liner system is presented in Calculation No. 18, Appendix E, Volume V. The results of the calculation indicate that the 0.5 ft road base and 1.5 ft subbase materials will adequately dissipate truck wheel loads and, in conjunction with the subgrade preparation specifications, which call for a 1 inch maximum particle size, will adequately protect the geomembrane from puncture. A calculated factor of safety of 60 for puncture resistance was computed.

5.2.1.2 Geocomposite

Low overburden pressures due to the overlying roadbase and subbase are not high enough to adversely affect transmissity of the geocomposite. Review of the geocomposite transmissivity charts presented in Appendix G-1, Volume VI indicate that transmissivity will be affected negligibly.

5.2.1.3 Geotextiles

Geotextile filtration and puncture resistance are evaluated in Calculation No. E-20, and Calculation No. E-21, found in Appendix E, Volume VI respectively. Based on these calculations, the geotextiles specified for the truck roll-off area will adequately filter the sites fine grained materials and resist puncture.

5.2.2 Anchor Trench Design

The purpose of the truck roll-off anchor trench is to hold the geosynthetic liner components in place during placement of the overlying subbase and roadbase materials. Pull out considerations due to settlement are not a relevant concern for this facility.

5.2.3 Stormwater Collection Sump and Leak Detection Sump Containment Hydraulic Analyses

Calculation No. E-32, Appendix E, Volume VI evaluates the capacity of the stormwater collection sump in the lined portion of the truck roll-off unit to remove liquid from the geocomposite drainage layer. Based on this calculation, the geocomposite flow capacity is estimated to be 161,000 gpd and the sump capacity is estimated to be 199,000 gpd. The sump will, therefore, provide adequate liquid removal capabilities.

6.0 STABILIZATION UNIT

6.1 STABILIZATION UNIT DESIGN

6.1.1 General

The purpose of the stabilization unit is to treat waste streams using a chemical stabilization process which will chemically alter hazardous waste constituents such that their leachability is reduced to levels allowing landfill disposal. The stabilization treatment process involves combining chemical reagents with waste materials according to a specific treatment guideline and mixing until the waste/reagent reactions are complete. The batch stabilization mixing method to be used at the Facility requires a backhoe excavator to mix waste with reagents in a large double lined steel bin.

Stabilization unit design elements presented here include stabilization unit layout; stabilization bin, bin vault, and floor design; and stabilization process design. This section describes each of these design elements. It should be noted that certain components of the stabilization building, process control and delivery systems, ventilation systems and steel bins will be completed under future design/build contracts.

6.1.2 Stabilization Unit Layout

Drawing No. 33 (Volume III) illustrates the layout of the stabilization building and the surrounding area. As previously discussed, the stabilization unit has entrances for incoming trucks on both the north and south access roads. These accesses will be used for incoming waste trucks loaded with nonstabilized waste for processing in the bins. Incoming trucks will enter the gravel lined apron on the north or south side of the unit and back into the stabilization building. Once the load has been dumped into the bin and the truck bed washed out, the truck will exit the unit via its entrance route. The east and west building entrances will be used by stabilized waste loadout trucks which will cycle between the truck roll-off area or the landfill. The gravel lined areas surrounding the stabilization unit will not be used to stage waste haul trucks. Parking areas for site personnel vehicles will be designated near the stabilization unit control room.

The control room is positioned centrally along the west wall of the stabilization building. From this vantage point operations personnel will be able to monitor all activities taking place inside the building. Reagent storage tanks and silos are also located on the west side of the building which permits operations personnel to view reagent delivery activities.

The stabilization building's internal arrangement is centered around the four waste mixing bins. The mixing bins are orientated such that delivery, mixing and loadout operations can take place from either the north or the south sides of the building. Stabilization unit operations are depicted on Drawing No. 34 (Volume III). The 25 ft long by 10 ft wide by 10 ft deep bins can hold approximately 100 cy of waste and reagent material. The double lined steel bins are located within a 38 ft wide by 79 ft long by 12 ft deep concrete vault which has a total volume of 1,330 cy. The bin and vault arrangement provides three levels of waste containment with the inner bin liner serving as primary containment, the outer bin as secondary containment, and the vault as final or tertiary containment.

The 118 ft wide by 123 ft long concrete floor is sized to accommodate the backhoe mixer and load out truck operations with adequate clearances. Section 6.2.3 discusses working point distance and clearance radius requirements for this operation.

The vertical dimensions for the stabilization building will be established during the building design/build phase when locations and sizing of the reagent delivery system and ventilation system are finalized.

6.1.3 Bin Liner, Bin Vault, and Floor Design

The stabilization bin arrangement is a double lined system consisting of two concentric steel bins separated by a network of wire rope isolators. Since the bins are concentric, the outer bin (secondary containment) can hold 100% of the volume of the inner bin. The wire rope isolators act as shock absorbers to dissipate impact loading to the bins by the mixing action of the backhoe. The wire rope isolators also serve to reduce impact loading transferred to the concrete vault floor and walls. Drawing No. 36 (Volume III) illustrates the inner and outer bin arrangements, bin dimensions, plate thicknesses, reinforcing rib arrangements, and locations of the wire rope isolators. The inner bin is not attached to the outer bin and therefore, can be removed. The space between the bins provides access for leak detection instrumentation and fluid removal piping. Should a leak in the inner bin occur such that fluids escape into the inter-bin space, the leak detection instrumentation will trigger alarms in the control room immediately notifying the operators. The bin can then be taken out of service, inter-bin fluids removed, bin walls inspected, and repairs made if necessary. The outer bin is attached to the floor of the concrete vault. Drawing No. 33 (Volume III) shows the location of the LDRS piping. Specification presented in Calculation No. E-32, Appendix E, Volume VI describes the steel plate, reinforcing members, and energy absorbing devices intended for the stabilization bin system.

The concrete vault will contain the stabilization bins. The 1,330 cy vault has the capacity to contain 100 percent of the volume of one 100 cy bin (i.e., after removing 400 cy for each bin). As mentioned above, the vault serves as a tertiary containment feature should a catastrophic bin failure occur. In addition, the vault also provides access to the bins for inspection purposes and for ancillary reagent delivery piping and ventilation ducts. Construction details will be prepared for the concrete containment vault similar to those provided in Specification Section 03100, Section 03200, Section 03290, and Section 03300 contained in Appendix C, Volume IV.

The concrete floor will be steel reinforced cast-in-place concrete. All joints in the concrete floor will be constructed with chemical resistant water stops and caulking sealer. Drawing No. 45 (Volume III) shows the rebar types and concrete details for the floor. Construction details for the floor will be prepared similar to those provided in Specification Section 03100, Section 03200, Section 03290, and Section 03300 (Appendix C, Volume IV). Specification Section 07970 describes the concrete epoxy coating requirements.

6.1.4 Stabilization Process Design

Drawing No. 34 (Volume III) summarizes the major waste processing unit operations and illustrates typical waste and reagent stream flows. Also shown are reagent tank and silo capacities, delivery piping, and control valve and flow meter locations.

Waste stabilization unit operations include waste receiving, reagent addition, stabilization mixing, and stabilized waste loadout. Waste receiving involves positioning loaded waste haul trucks at the end of the bin, dumping the waste load, and washing out any residue left in the truck bed into the bin. Reagent addition involves placing a cover on top of the bin, connecting the ventilation and dry reagent delivery ducts, and injecting reagents into the bin. Reagent delivery to the bins will be controlled by a process controller (computer) system which will automatically sequence and deliver the necessary quantities of reagent based on a predetermined waste processing guideline. The bin cover will then be removed and a backhoe type excavator will mix the reagents with the waste. Following mixing, the waste will be sampled and a paint filter test will be conducted to ensure that no free liquids are present. Also, if necessary, samples will be gathered for toxicity characteristic leachate procedure (TCLP) testing. If the paint filter test is passed, the backhoe will load the stabilized waste into a waste haul truck (roll-off truck) and the truck's roll-off cover will be positioned over the waste. The truck will either proceed to the landfill for disposal or will stage the roll-off container in the truck roll-off area (if TCLP test results are required).

Reagent usage will vary with the waste type and the prescribed stabilization guideline, however, for design purposes a typical stabilization guideline, presented in the table on Drawing No. 34 was used as a basis to size the various reagent storage and delivery systems. It should be noted that both waste receipt rates and stabilization guidelines will vary considerably. Stabilization process flows are discussed further in Section 6.2.4.

Reagent storage and delivery systems for two types of dry reagent and three types of liquid reagent (one being water) are incorporated into the design. Dry reagents including cement and fly ash will be stored in 25,000 and 50,000 cubic foot silos, respectively, and delivered to the bins by a pneumatic delivery system. Liquid reagents including calcium polysulfate and ferrous sulfide will be batch mixed in individual 10,000 gal reagent tanks and pumped into the bins. Water will also be pumped to the stabilization bins.

For design purposes, a CAT 213B LC type excavator was selected as the backhoe mixer, however, other equipment manufacturer's offer excavators with similar reach, power, and weight characteristics.

In order to ensure no visible dust emissions during stabilization processing, the bins and the stabilization building will be equipped with an exhausting ventilation system which will maintain a negative pressure inside the building. Slotted ducts located around the perimeter of each bin will provide supply and return air in a push-pull arrangement to remove dust during the waste receiving, mixing, and loadout operations. During reagent delivery operations, the bin cover, which will also be connected to the exhaust system, will control dust. Dust will be removed from the exhaust air in the bag house located on the west side of the building. Collected dust will be processed in the stabilization unit.

Wastes containing VOCs greater than 500 parts per million per weight (ppmw) will not be accepted for stabilization processing.

6.2 STABILIZATION UNIT DESIGN ANALYSES

6.2.1 Stabilization Bin Structural Analyses

Basic engineering principles in conjunction with finite element analyses were used to address the preliminary structural design of the steel stabilization bins. Principles of impulse - momentum and conservation of energy were used to establish the mass, velocity and displacement relationships. Then plated stresses were approximated through the use of a computer program, Sap 90. Finally force and displacement results were scaled up/down to limiting displacements (controlled by the wire rope isolators) and stresses (controlled by the grade of steel).

The fundamental design inputs for the bin analysis are the forces generated by the backhoe mixing action. For the purposes of this design a CAT 213B LC type backhoe was assumed. Critical velocities of the backhoe movements to prevent damage to the bins were determined as a percentage of maximum velocities achievable by the backhoe. These limiting velocities will be implemented in the actual backhoe unit by adjusting the hydraulic system flows. Calculations are presented in Calculation No. E-23, Volume VI, Appendix E and summarized in the overview below.

<u>Overview Structural Analysis</u>

1. Initial calculations establish the structural capacity required to support the static loads from hazardous waste material plus the stabilizing materials. The worst case scenario for the static load case is 80 cubic yards of material weighing 2970 lbs/cy.

2. Preliminary dynamic analyses for vertical impact loads due to the material dropping into the bin indicate that this is not a significant problem. However, impact from the bucket dropping freely due to a total and instantaneous hydraulic failure from a height of 15 feet would cause stresses in a 1 inch thick inner liner which would far exceed the yield stress of the steel and cause a permanent "dent" in the steel. It does not appear cost effective to design the inner liner for this possibility.

3. Preliminary dynamic analyses established a side impact load from the backhoe bucket with contributions from the stick and boom based upon their relative velocity and percent of load transferred to the bucket when it impacts the sidewall of the mixing bin.

    a. Static loads were applied to the wall of the inner liner to establish the relative deflections of points surrounding the point of impact. Then the effectiveness of the inner liner which would act to reduce the momentum of the bucket was established and the conservation of momentum principle was used to determine the reduction in velocity immediately after impact.

    b. After impact the moving bucket plus the effective plate mass has a kinetic energy equal to one half of the total mass times the square of the velocity. That kinetic energy is "gradually" transferred into potential energy from force times displacement (or bending moment times angle change) in the inner liner, the energy absorbing springs and the outer plate support system. When the bucket has been stopped all of the energy has been transferred from the kinetic state to

the potential state. It appears that 80 to 90 percent of the energy absorption occurs in the springs.

c. Through a trial and error process, approximate relationships between initial velocity, displacements and stresses in the structural systems were established. It appears that the controlling factor in the system is the stress in the inner liner when subjected to impact loads.

d. The impact loads from the weight of the bucket plus contributions from the stick and boom totaling approximately 3,290 pounds results in a kinetic energy in excess of 800,000 lb-inches for the condition where a swing angle of 180 degrees can occur in 3 seconds (approximately 440 inches per second at the outer end of the bin).

e. In order to limit the stresses in the high strength inner liner plate to an acceptable allowable value, it will be necessary to reduce the side to side velocity of the bucket to 15 percent of the present velocity with a ¾ inch thick plate, 19 percent for a 7/8 inch plate and 23 percent for a 1 inch plate.

4. Preliminary analysis of the dominantly in and out impact loads caused by movement of the boom, stick and bucket were also made. Combinations of circular velocities (Boom + Stick + Bucket) could easily result in velocities and resulting impact loads greater than the capacity of the inner plate to resist. Some of these velocities will probably need to be reduced to limit damage to the inner liner but this will require significantly more detailed calculations. Note that the effective mass at impact varies with each of these elements and the addition of these circular velocities and tributary masses in any particular direction and at any particular point is far from linear. The maximum reduction in velocity for any of these elements appears to be in the order of 50 percent.

Bin steel plate thickness is dependent on the grade of steel selected. The final bin design will determine the optimal steel plate to be used.

Corrosion protection for the bins will be provided by installing grounded cathodes to the inner and outer bins.

6.2.2 Stabilization Unit Concrete Vault

The stabilization unit concrete vault is not a secondary containment however, all joints in the concrete vault of the stabilization building will be constructed with chemical resistant water stops. In addition, a chemical resistant epoxy coating will be placed on the surface of the vault floor and walls to further restrict potential liquid penetration into the concrete.

6.2.3 Stabilization Unit Concrete Floor

Waste entering the stabilization building will be contained either in the DOT approved waste trucks, or in double walled piping coming from the liquid waste storage area, or in the double walled stabilization bins. Stabilized waste, having undergone treatment, will either be contained in roll-off trucks fashioned with DOT approved truck bed liners or, if treatment standards are met, according to approved testing protocols, the stabilized waste will be transferred directly to the landfill. The floor of the stabilization building will not be exposed to untreated waste

material and is not required to serve as a containment system. However, all joints in the concrete floor of the stabilization building will be constructed with chemical resistant water stops. In addition, a chemical resistant epoxy coating will be placed on the surface of the floor to further restrict potential liquid penetration into the concrete.

As shown on Drawing No. 33 (Volume III), stabilization bins are located on 19 ft centers in the middle of the stabilization building. The bins are situated such that adjacent bins alternate mixing and receiving ends allowing for reagent addition operations to take place simultaneously with mixing or loadout operations in two adjacent bins.

During mixing and loadout operations, the center point (rotational axis) of the backhoe unit will be located 8 to 9 ft from the mixing end of the bin. Load out trucks, which can access the building through one of four doorways, will be positioned between 15 to 20 ft from the backhoe center point within the 20 ft wide load out truck lane. A 6.5 ft clearance is provided between the load out truck lane and the north and south building walls. A 27 ft clearance is provided between the outer bins and the east and west building walls. At this distance the backhoe unit will be able to make a full 180° swing angle in the direction of the wall with minimal reach adjustments.

The backhoe unit will be equipped with synthetic rubber track pads covering the steel track ribs. The track pads will allow the backhoe unit to move over the concrete floor without damaging the floor surface.

6.2.4 Stabilization Process Analyses

The table presented on Drawing No. 34 (Volume III) summarizes the stabilization process reagent flows based on a typical stabilization guideline and typical liquid and solid waste processing requirements. The 25,000 and 50,000 cft dry reagent storage silos and 10,000 gal tank capacities are based on providing sufficient reagent quantities for one week of normal stabilization operations. Reagent delivery piping sizes shown on Drawing No. 34 (Volume III) are preliminary and will be finalized when selection of the pumps and dry reagent pneumatic system are determined, however, these piping sizes are capable of meeting the daily reagent delivery requirements.

Ventilation system requirements will be determined in conjunction with the construction of the stabilization building. As previously mentioned, the building will be maintained under negative pressure during processing operations to ensure no visible dust is emitted. Additionally, each bin will have its own push-pull ventilation system to control dust inside the building during waste receiving, mixing, and loadout operations.

7.0 DRUM HANDLING UNIT

7.1 DRUM HANDLING UNIT DESIGN

7.1.1 General

The purpose of the drum handling unit is to provide storage capacity for drummed waste streams which will either be processed in the stabilization unit, placed in the landfill, or shipped to other waste processing centers such as incinerators or solvent recovery plants.

Drum handling unit design elements include drum handling unit layout, subgrade design; liner design; concrete floor design, and drainage sump design. This section describes each of these design elements.

7.1.2 Drum Handling Layout

Drawing No. 37 (Volume III) shows the layout of the drum handling unit floor plan and surrounding area. Additional details for the floor and floor drains are illustrated on Drawing Nos. 38 and 39 (Volume III).

As previously discussed, the drum handling unit entrance faces the north access road. Incoming trucks will enter the gravel lined apron and will back up to the loading dock areas. Once the truck unloading (or loading) operation is complete, the trucks will exit the unit via the same north access road. Parking areas for site personnel vehicles will be designated near the drum handling unit office. The gravel apron in front of the unit will not be used to stage waste haul trucks.

The drum handling building will be an open walled building with a roof which extends over the entire floor and truck docking areas. The roof structure will eliminate rainwater from entering the drum handling area. The open walls will provide ample ventilation inside the building, however, personnel involved with drum sampling and decanting activities will still be required to use supplied air respiratory systems. As discussed in Section 1.5, during winter months the site will experience temperatures as low as 14°F, with average daily temperatures of 36°F. Under the most severe conditions, freezing of liquids in the drums may be possible. Therefore, during periods of extended low temperatures, drums will be monitored for any sign of leakage or damage due to freezing. Damaged drums will be immediately placed in over pack units to ensure containment.

The 49,265 sf total floor area is divided into 7 drum storage cells with each cell having a separate drain, collection sump, and leak detection sump. Each 63-ft long by 52-ft wide cell is capable of storing 160 drums. Two of the cells are designated as TSCA cells and as such are required to be isolated from other drum storage cells. The 0.5 ft high by 3.5 ft wide walkway which surrounds the TSCA cell provides the necessary isolation. The remaining five cells are also separated by walkways. As shown on Drawing No. 38, (Volume III) drums will be placed in four rows, two drums deep. Two 12-ft wide aisles will provide access for the forklift to place and remove drums. Any drum spills or leakage will flow to the deep drain located along the centerline of the cell. The drain bottom slopes at 2 percent to the sumps located on the south side (rear) of the building. Any fluids in the sump will be removed through the LCRS and

LDRS sump riser pipes using a vacuum truck which can access the pipes from the rear of the building.

7.1.3 Subgrade Excavation, Liner System, Leachate Collection Sump, and Leak Detection Sump Design

Subgrade Excavation

The subgrade surface will be compacted to provide a suitable foundation for overlying drainage soils, geosynthetics, and the concrete floor and building foundation. Soft areas will be over excavated and replaced with compacted structural fill. Specification Section No. 02110, (Appendix C, Volume IV) describes site preparation, excavated soil classification and stockpiling, subgrade surface preparation and inspection, structural fill placement and compaction requirements, survey and quality control, and erosion control features.

Liner System

Drawing No. 37 (Volume III) indicates the areal extent of the primary liner system and the secondary liner components intended for the floor, drainage trenches and sumps, and anchor trench areas. In the floor area of the drum handling unit, the liner system is a double lined system consisting of (from bottom up), a prepared subgrade, a HDPE geomembrane secondary liner, a cushion geotextile, select subbase leachate collection and removal system layer, and the epoxy coated concrete floor which serves as the primary containment element. In the drainage trench areas, the liner system is a double lined system consisting of (from bottom up), a prepared subgrade, a secondary HDPE geomembrane liner, a geonet leak detection and removal system layer, and a primary geomembrane liner. Details of each liner component of the floor and drainage trench areas (from bottom up) are discussed below.

Floor Liner System

- *.5 ft thickness of prepared subgrade*

  The prepared subgrade component will provide a smooth stable surface suitable for placement of overlying geosynthetic materials. Specification Section 02119, (Appendix C, Volume IV) presents subgrade material requirements including particle size and moisture content, placement and compaction requirements, and survey and field quality control requirements.

- *60-mil thick high density polyethylene (HDPE) geomembrane liner (smooth)*

  The 60-mil HDPE geomembrane liner placed on top of the prepared subgrade is the secondary liner component. The HDPE geomembrane liner is a highly efficient barrier layer to restrict percolation of leachate into the subgrade. Specification Section 02775, (Appendix C, Volume IV) describes minimum geomembrane properties required, subgrade preparation and inspection, material transportation and handling procedures, deployment and seaming requirements, and material CQA.

- *12-oz non-woven cushion geotextile*

  The 12 non-woven geotextile layer placed on top of the geomembrane will provide cushion, as well as filtration qualities to protect the geomembrane from puncture and allow liquids percolating through the concrete floor and select subbase to drain to the sump area. Specification Section 02714, (Appendix C, Volume IV) describes minimum geotextile properties required, material transportation and handling procedures, deployment and seaming requirements, and material CQA.

- *0.5 ft thick select subbase*

  The select subbase will provide a stable foundation for the overlying concrete floor while allowing liquids from the overlying concrete floor that percolate through the concrete to drain to the sump area. Specification Section 02229, (Appendix C, Volume IV) presents material requirements including particle size and moisture content, placement and compaction requirements, and survey and field quality control requirements.

- *0.5 ft epoxy coated concrete floor*

  The drum handling unity concrete floor slopes towards one of the seven drainage trenches located within each cell. The drum handling unit secondary liner system completely encompasses the floor so that any leakage through the pad will also drain back into one of the drainage trenches. The concrete floor will be steel reinforced cast-in-place concrete. All joints in the concrete floor will be constructed with chemical resistant water stops and caulking sealer. Drawing No. 45 (Volume III) shows the rebar types and concrete details for the floor. Construction details for the floor are also called out in Specification Section 03100, Section 03200, 03290, and Section 03300 in Appendix C, Volume IV. Specification Section 07920, (Appendix C, Volume IV) describes the concrete epoxy coating requirements.

Drainage Trench Liner System

- *0.5 ft thickness of prepared subgrade*

  The prepared subgrade component will provide a smooth stable surface suitable for placement of overlying geosynthetic materials. Specification Section 02119, (Appendix C, Volume IV) presents subgrade material requirements including particle size and moisture content, placement and compaction requirements, and survey and field quality control requirements.

- *60-mil thick high density polyethylene (HDPE) secondary geomembrane liner (smooth)*

  The 60-mil HDPE liner placed on top of the prepared subgrade is the secondary liner component. The HDPE geomembrane liner is a highly efficient barrier layer to restrict percolation of leachate into the subgrade. Specification Section 02775, (Appendix C, Volume IV) describes minimum geomembrane properties required, subgrade preparation and inspection, material transportation and handling procedures, deployment and seaming requirements, and material and CQA.

- *Geonet leak detection and removal system layer (transmissivity ≥ $5x10^{-3}$ m^2/sec)*

  The high transmissivity geonet drainage layer provides a means for leak detection and removal fluids percolating through the primary geomembrane layer. Flow calculations discussed in Section 7.2.1 and presented in Appendix E indicate that the geonet is capable of removing fluids such that ponding on the secondary geomembrane liner can be avoided. Specification Section 02712 describes minimum geonet properties required, material transportation and handling procedures, deployment and seaming requirements, and material and construction quality assurance.

- *60-mil thick high density polyethylene (HDPE) primary geomembrane liner (smooth)*

  The 60-mil HDPE geomembrane liner placed on top of the geonet layer serves as the primary liner component in the drainage trench area. The HDPE geomembrane liner is a highly efficient barrier layer to restrict percolation of fluids from entering the into the geosynthetic layers below. Specification Section 02775 (Appendix C, Volume IV) describes minimum geomembrane properties required, subgrade preparation and inspection, material transportation and handling procedures, deployment and seaming requirements, and material and CQA.

Leachate Collection and Removal Sump and Leak Detection and Removal Sump Design

The leachate collection and removal system and leak detection and removal system (LDRS) each have a separate sump from which fluids can be collected and removed. The liner components in the drainage trench system continue into the sumps, however, in order to provide adequate volume to efficiently operate removal pumps, a drainage gravel layer is incorporated in the sumps. Drawing No. 39 (Volume III) illustrates the sump layout and cross-sections and the geosynthetic component arrangements. The LCRS and LDRS slope riser pipes enter their respective sumps at the sump base and are in the same vertical plane. The slope riser trench arrangement enables the LDRS slope riser pipe to penetrate overlying geosynthetic liner elements at the crest of the sump rather than at its base. The LCRS sump and drain has a total fluid capacity of 2,110 gallons (after accounting for gravel). Ten percent of the cell water volume is 880 gallons based on a storage capacity of 160 55-gallon drums. The LDRS sump and drain has a total fluid capacity of 41 gallons (after accounting for gravel). Because these sumps are close to the surface and any fluids in the sump can be observed by looking down the riser pipes, fluid level instrumentation is not required.

7.2 DRUM HANDLING UNIT DESIGN ANALYSES

7.2.1 Geosynthetics Strength and Performance Analyses

7.2.1.1 Geomembranes

The 60 mil HDPE geomembrane located beneath the concrete floor area of the drum handling building is protected by an overlying geotextile and select subbase material. Below this geomembrane is a 0.5 ft thickness of prepared subbgrade. Specification Section 02119, (Appendix C, Volume IV) requires this subgrade material to have a maximum particle size of 1 inch. Specification Section 02775, (Appendix C, Volume IV) requires that the surface of the

prepared subgrade be smooth drum compacted and free of any foreign objects which might damage the overlying geomembrane. Considering that the loading conditions of the geomembrane in this arrangement due to the overlying sand, concrete floor, drums, and forklift wheeling loading do not approach the loading conditions evaluated in Calculation No. E-18, Appendix E, Volume V, the geomembrane will be adequately protected against puncture.

The geomembranes located in the drain areas and the drain sumps will not be subjected to significant overburden pressures. Drainage in the sump will not be compacted.

7.2.1.2 Geonet

The geonet layer in the drain areas and the drain sumps will not be subjected to significant overburden pressures which might reduce flow capacity. Additionally, the 2 percent slope of the drain system provides adequate relief to cause fluid flow to the sumps.

7.2.1.3 Geotextiles

Calculation No. E-20, Appendix E, Volume VI evaluates the Apparent Opening Size (AOS) of several available geotextile products with respect to the silty sands and Upper Dockum materials found at the site. Based on this calculation, the 7 oz nonwoven geotextile called for in the specifications will adequately filter fines from the foundation sand material (SM) .

7.2.1.4 Anchor Trench Design

The purpose of the anchor trench in the drum handling unit is to restrict movement of the geosynthetics during installation of the select subbase and concrete layers. Pullout capacity due to settlement is not a relevant concern for this facility.

7.2.2 Drum Handling Unit Concrete Floor

The floor of the drum handling building may be exposed to untreated waste material and is required to serve as the primary containment system. All joints in the concrete floor of the stabilization building will be constructed with chemical resistant water stops. In addition, a chemical resistant epoxy coating will be placed on the surface of the floor to further restrict potential liquid penetration into the concrete.

Drawing No. 45 (Volume III) shows the rebar types and concrete details for the floor. Construction details for the floor are also called out in Specification Section 03100, Section 03200, Section 03290 and Section 03300 found in Appendix C, Volume IV. Specification Section 07920, (Appendix C, Volume IV) describes the concrete epoxy coating requirements.

8.0 LIQUID WASTE STORAGE UNIT

8.1 LIQUID STORAGE UNIT DESIGN

8.1.1 General

The purpose of the liquid waste storage unit is to provide storage capacity for bulk liquid wastes which will either be processed in the stabilization unit or to be placed in the evaporation pond.

Liquid waste storage unit design elements include liquid storage unit layout, storage tank leak containment design; piping and pumping design; and concrete tank pad. This section describes each of these design elements.

8.1.2 Unit Layout

Drawing No. 40 (Volume III) shows the arrangement of the liquid waste storage tanks, piping, and tank containment pad and surrounding area. The four double lined HDPE poly tanks (9,000 gallon capacity each) will each have its own concrete pad area, discharge and intake pump, piping and control system.

As previously discussed, access to the liquid waste storage area is provided on the east, west, and north sides of concrete tank pads. Tanker trucks can use either the north access road or the road to the east of the liquid waste storage area.

Because the storage tanks are double walled, the concrete pad is not considered a liner element or a primary or secondary containment feature. The concrete pad is included as an additional measure to prevent the spread of fluid should leaks or spills occur at discharge piping connections and pumps located within the pad.

Discharge pipes to the stabilization building will be elevated double walled pipes.

8.1.3 Tank Leakage Containment Design

Drawing No. 40 (Volume III) illustrates the double walled poly tank system. The outer tank will be covered to prevent precipitation accumulation. The inner tank will not be covered. The tanks will be equipped with flexible connections at pipe penetrations between the inner and outer tanks and drainage ports in the outer tank. Chemical resistant gaskets will be used at all tank flanges. Liquids containing solvents such as MEK, toluene, xylene, diesel, or gasoline in concentrations greater than 15% will not be placed in the tanks. Tank tie down details will be developed from manufacturer's shop drawings when the tank is purchased.

The 15,500 gallon outer tank will contain the total volume of the 9,000 gallon inner tank should a leak in the inner tank occur. Each tank system will be equipped with graduated sight gauges allowing visual determination of fluid volume in the inner tank. In addition, to prevent tank overfilling or unnecessary pumping, high level and low level cutoff switches are included.

The tanks will be vented to the atmosphere to prevent internal pressure buildup. Protected ladders running up the outside of the outer tank will provide access to openings in the top tank.

Specification Section 13205, (Appendix C, Volume IV) discusses the tank material and installation requirements. Construction details for the concrete tank pad are called out in Specification Section 03100, Section 03200, Section 03290, and Section 03300 found in Appendix C, Volume IV.

8.2 LIQUID WASTE STORAGE UNIT DESIGN ANALYSES

8.2.1 Tank Design, Testing, and Quality Control Standards

The liquid waste storage unit poly tanks will be manufactured by Central California Container Inc. Performance tests, material property tests, and design standards provided by the manufacturer include the following:

- **Performance Requirement Tests**
  Low Temperature Dart Impact Test (ASTM D-1998)
  O-xylene-Insoluble Faction (Gel Test) (ASTM D-1998)
  Ultrasonic Gauge Wall Thickness Test (ASTM D-1998)
  Hydrostatic Pressure Test (ASTM D1998)

- **Material Properties Tests**
  Environmental Stress Crack Resistance (ASTM D-1693)
  Elongation @ Break, Tensile Strength (ASTM D-638)
  UV Stabilizer Compounded into Resin (ASTM D-1998)

- **Design Standards**
  Wall Thickness Calculations (ASTM D01998)
  Seismic & Wind Restrain (UBC)
  Finite Element Analysis (ADE-92)

The tank manufacturer will provide recommended tank tie down details for review and approval by a registered New Mexico professional engineer prior to tank installation.

8.2.2 Pumping and Piping

Drawing No. 40 (Volume III) illustrates the pumping, piping, and control feature arrangement for the liquid waste receiving and storage area. High and low level cutoffs will prevent tank overfilling and pump burnout. The flow meter will record fluid volumes pumped into and out of the tank.

All piping installed at the liquid waste storage unit will be double walled.

8.2.3 Concrete Tank Pad

The liquid waste storage unit concrete pad is not a secondary containment feature, however, it will provide containment for small leaks.

Drawing No. 45 (Volume III) shows the rebar types and concrete details for the floor. Construction details for the floor are also called out in Specification Section 03100, Section 03200, and Section 03300 found in Appendix C, Volume IV. Specification Section 07920, (Appendix C, Volume IV) describes the concrete epoxy coating requirements.

9.0 TRUCK WASH UNIT

9.1 TRUCK WASH UNIT DESIGN

9.1.1 General

DOT approved roll-off trucks delivering bulk solid waste for landfill disposal will have plastic bed liners which will isolate the waste from the roll-off container interior. As waste loads are dumped, these bed liners can become damaged exposing the roll-off container to the waste material. If this material cannot be removed from the roll-off container at the landfill waste placement face, then the truck will be required to proceed to the truck wash unit, where the container will be washed out. Also, during rainy periods, mud from access roads or daily cover soil can collect on the wheels and undercarriages of waste haul trucks exiting the landfill. Similarly, if this material cannot be removed from the truck while in the landfill, then the truck will be required to proceed to the truck wash unit for cleanup prior to exiting the site. Landfill operations equipment such as waste compactors, scrapers, water trucks, and other vehicles may also require similar cleanup upon exiting the landfill. Because potentially contaminated materials may be washed from the roll-off container or from undercarriage recesses while at the truck wash unit, a double liner containment system has been designed to contain wash water and wash residues.

The truck wash unit design elements presented here include the facility layout, liner system, and sump and leak detection system.

9.1.2 Facility Layout

Drawing No. 44 (Volume III) illustrates the truck wash unit layout. As previously discussed, access to the truck wash unit is from the west landfill perimeter road. Exiting traffic will proceed to the north access road. The unit is designed with two wash bays: a heavy equipment bay and a roll-off truck bay; and a water storage area. Both wash bays drain to a common sump area which will collect wash water and residue. Poly tanks and pumps, located in the water storage area provide storage and pumping capacity for clean and used wash water.

The truck wash sump drains to a collection point at its north end where water will be pumped from the sump into a clarifier. Residues remaining in the sump can be removed using a front-end-loader which has access from the heavy equipment wash bay. Oils, grease, and fine sediments will be removed from the wash water in the clarifier before being pumped to a double lined poly tank. Wash water and residues will be chemically analyzed and handled as dictated by their characteristics.

The entire concrete floor of the truck wash unit, which acts as primary containment, is designed with a geosynthetic secondary HDPE geomembrane liner and leak detection and removal system. The concrete floor will be coated with epoxy similar to the drum handling unit.

The roll-off truck bay is equipped with a truck barrier, tailgate lift, moveable wash platforms, and three high pressure hose reel and nozzle assemblies. The high pressure pump and delivery system can either be a single fixed installation or be made up of several portable units. Roll-off trucks will back into the bay to the truck barrier and lift the truck bed as if to dump. The

tailgate lift will be attached and the tailgate raised to expose the inside of the roll-off container. Truck wash personnel will then wash out the inside of the container using the high pressure wash system. Wash water and residue will then be washed from the concrete floor into the sump area. If necessary, moveable platforms can be positioned next to the truck and the truck bed can be washed from openings in its top surface.

The heavy equipment wash bay will be constructed with steel rail or I-beams incorporated into the concrete floor of this bay to resist damage by heavy equipment tracks. Wash water and residue will flow to the sump area and will be removed as discussed above.

9.1.3 Subgrade Excavation, Liner System, Sump and Leak Detection System Design

Subgrade Excavation

The subgrade surface will be compacted to provide a suitable foundation for overlying soils, geosynthetics, concrete floor, and building foundation. Soft areas will be overexcavated and replaced with compacted structural fill. Specification Section No. 02110 (Appendix C, Volume IV) describes site preparation, excavated soil classification, stockpiling, subgrade surface preparation and inspection, structural fill placement and compaction requirements, survey and quality control, and erosion control features.

Liner System

Drawing No. 44, sheet 1 of 2, (Volume III) indicates the aerial extent of the liner system and the liner components intended for the floor, sump, and anchor trench areas. The liner system consists of (from bottom up), a prepared subgrade, a HDPE geomembrane secondary liner, a geocomposite leak detection and removal system (LDRS) layer, a foundation sand layer, and the epoxy coated concrete floor which serves as the primary containment element. Details of each liner component are discussed below.

Floor Liner System

- *0.5 ft thickness of prepared subgrade*

  The prepared subgrade component will provide a smooth stable surface suitable for placement of overlying geosynthetic materials. Specification Section 02119, (Appendix C, Volume IV) presents subgrade material requirements including particle size and moisture content, placement and compaction requirements, and survey and field quality control requirements.

- *60-mil thick high density polyethylene (HDPE) geomembrane liner (textured)*

  The 60-mil HDPE geomembrane liner placed on top of the prepared subgrade is the secondary liner component. The HDPE geomembrane liner is a highly efficient barrier layer to restrict percolation of leachate into the subgrade. Specification Section 02775, (Appendix C, Volume IV) describes minimum geomembrane properties required, subgrade preparation and inspection, material transportation and handling procedures, deployment and seaming requirements, and material construction quality assurance.

- *Geocomposite*

  * A geocomposite leak detection and removal system (LDRS) layer (transmissivity ≥ 2.2 x 10^{-4} m^2/sec) consisting of:
    - ◊ A 7 oz. geotextile (non-woven)
    - ◊ A geonet
    - ◊ A 7 oz. geoxtile (non-woven)

  The high transmissivity geocomposite LDRS layer provides a means to detect and remove fluids percolating through the epoxy coated concrete floor. Flow calculations discussed in Section 3.2.8 and presented in Appendix E indicate that the geocomposite is capable of removing fluids such that ponding on the geomembrane liner can be avoided. Specification Section 02712, (Appendix C, Volume IV) describes minimum geonet properties required, material transportation and handling procedures, deployment and seaming requirements, and material and construction quality assurance.

- *A 1 ft thick foundation sand layer*

  Specification Section 02231, (Appendix C, Volume IV) presents foundation sand material requirements including particle size and moisture content, placement and compaction requirements, and survey and field quality control requirements.

- *One foot thick epoxy coated concrete floor*

  The truck wash unit floor slopes towards the sump located between the two bay areas. The truck wash unit secondary geomembrane liner system completely encompasses the floor so that any leakage through the concrete floor will be captured in the LDRS. The concrete floor will be steel reinforced cast-in-place concrete. All joints in the concrete floor will be constructed with chemical resistant water stops and caulking sealer. Construction details for the floor will be provided similar to those presented in Specification Section 03100, Section 03200, Section 03290, and Section 03300 found in Appendix C, Volume IV. Specification Section 07920, (Appendix C, Volume IV) describes the concrete epoxy coating requirements.

Leak Detection and Removal System (LDRS) Sump Design

The LDRS geocomposite drains to a separate sump from which fluids can be detected and removed. In order to provide adequate volume to efficiently operate removal pumps, a drainage gravel layer has been incorporated in the sump. Drawing No. 44 (Volume III) illustrates the sump layout and cross sections and the geosynthetic component arrangements. A vertical riser pipe is located in the center of the sump and provides space for the fluid removal pump. The LDRS sump has a total fluid capacity of 72 gallons (after accounting for gravel). Because this sump is close to the surface and any fluids in the sump can be observed by looking down the LDRS riser pipe, fluid level instrumentation is not required. Fluids in the sump will be removed by pumping into the clarifier or by vacuum truck.

9.2 TRUCK WASH UNIT DESIGN ANALYSES

9.2.1 Geosynthetics Strength and Performance

Geomembrane, geocomposite, and geotextile material installation in the truck wash unit is similar to the installations in the drum handling unit. Rationale and computations pertaining to geomembrane puncture and tearing, geocomposite flow capability, and geotextile cushioning and filtration performed for the drum handling unit, which are applicable to the truck wash unit, are not repeated.

9.2.2 Tank Design, Testing, and Quality Control Standards

Tanks and piping intended to store and convey potentially contaminated wash water will be double lined installations similar to the liquid waste storage area tanks. Section 8.2 presents a discussion of this equipment which also applies to the truck wash unit. Control features such as LL, HL values, meters, etc for this system are identified on Drawing No. 44, sheet 1 of 2 (Volume III).

The clean water supply tank and piping will be single walled installations.

10.0 REFERENCES

1. Algermissen, S.T., Perkins, D.M., Thenhaus, P.C., Hanson, S.L., and Bender, B.L., 1982. *Probabilistic Estimates of Maximum Acceleration and Velocity in Rock in the Contiguous United States,* Open-File Report 82-1003, United States Department of the Interior Geological Survey.

2. American Society for Testing and Materials Symposium, 1984. ASTM Technical Publication: *Hydraulic Barriers in Soil and Rock.*

3. American Society for Testing and Materials, 1990. *Geosynthetic Testing for Waste Containment Applications.*

4. American Society for Testing and Materials, 1992. *Slurry Walls: Design, Construction, and Quality Control.*

5. American Society for Testing and Materials, 1994. *Hydraulic Conductivity and Waste Contaminant Transport in Soil.*

6. American Society for Testing and Materials, 1997. *Testing and Acceptance Criteria for Geosynthetic Clay Liners.*

7. American Society of Civil Engineers, 1990. *Waste Containment Systems: Construction, Regulation, and Performance.*

8. American Society of Civil Engineers, 1995. *Landfill Closures Environmental Protection and Land Recovery.*

9. Barfield, B.J., Warner, 1995 and Haan, C.T. (1995). *"Applied Hydrology and Sedimentology for Disturbed Areas."* Chapter 5 (Oklahoma Technical Press, Oklahoma).

10. Barfield, Warner, and Haan, 1981. *Applied Hydrology and Sedimentology for disturbed Areas.* Oklahoma Technical Press, Stillwater, Oklahoma.

11. Bear, J., 1979. *"Hydraulics of Groundwater",* Department of Civil Engineering Technician - Israel Institute of Technology, Haifa Israel.

12. Benson, Craig, H., Zhai, Huaming, Wang, Xiaodong, *"Estimating Hydraulic Conductivity on Compacted Clay Liners", Journal of Geotechnical Engineering, Vol. 120, No. 2,* February, 1994.

13. Bonaparte, R. And Gross, B.A., *"Field Behavior of Double-Liner Systems"*, Waste Containment Systems Construction, Regulation, and Performance, ASCE Geotechnical Special Publication No. 26, November 1990, pp. 52-83.

14. Bowles, Joseph E., 1988. *Foundation Analysis and Design, Fourth Edition,* Peoria, IL.

15. Burtell, R., TerraMatrix, Inc., Engineering and Environmental Services, January, 1994. *Solid Waste Disposal Facility Criteria, Technical Manual*

16. Caterpillar Tractor Co., 1985. *Caterpillar Performance Handbook,* Peoria, IL.

17. Department Of Transportation Regulations

18. Daniel, D. and Koerner, R., 1995. *Waste Containment Facilities Guidance for Construction, Quality Assurance and Quality Control of Liner and Cover Systems.*

19. Daniel, D. And Koerner, R., 1997. *Waste Containment Facilities Guidance for Construction, Quality Assurance and Quality Control of Liner and Cover Systems.*

20. Department of Civil and Environmental Engineering, Utah State University, Logan, UT, *Structural Performance of Perforated and Slotted High-Density Polyethylene Pipes Under High Soil Cover,* 1987.

21. Departments of the Army and the Air Force, 1966. *"Calculation Methods for Determination of Depths of Freeze and Thaw in Soils" - TM 5-8526.*

22. Department of the Navy, Naval Facilities Engineering Command, 1983. *"Soil Mechanics"*, Design Manual 7.1.

23. Department of the Navy, Naval Facilities Engineering Command, 1982. *"Foundations and Earth Structures"*, Design Manual 7.2.

24. Department of the Navy, Naval Facilities Engineering Command, 1983. *"Soil Dynamics, Deep Stabilization, and Special Geotechnical Construction"*, Design Manual 7.3.

25. Environmental Protection Agency Seminar Publication. *Requirements for Hazardous Waste Landfill Design, Construction, and Closure.*

26. Giroud, J.P., Gross, B.A., and Darrasse, J., *"Flow in Leachate Collection Layers"* to be published, 1993.

27. Gross, B.A., Bonaparte, R., and Giroud, J.P., *"Evaluation of Flow from Landfill Leakage Detection Layers"*, Proceedings, Fourth International Conference on Geotextiles, Vol. 2, The Hague, June 1990, pp. 481-486.

28. Hewitt, R.D., Daniel, D.E., 1996. *Hydraulic Conductivity of Geosynthetic Clay Liners Subjected to Freeze Thaw,* Journal of Geotechnical Engineering. To be published.

29. Holtz, Robert D., Ph.D, P.E., Kovacs, Ph.D., P.E., 1981. *An Introduction to Geotechnical Engineering.*

30. Hsai-Yang Fang, Ph.D., 1991. Foundation Engineering Handbook, Second Edition.

31. Joint Committee Report of AASHTO-AGC-ARTBA, American Association of State, Highway and Transportation Officials, 1991. *Report on Task Force 25,* Washington DC.

32. Jumikis, Alfreds R., 1983. Series on Rock and Soil Mechanics, Vol. 7, *"Rock Mechanics, Second Edition".*

33. Koerner, R.M., 1994. *"Designing with Geosynthetics, Third Edition"*, Prentice Hall, Englewood Cliffs, NJ.

34. Koerner, R., and Richardson, G. 1987. *Geosynthetic Design Guidance for Hazardous Waste Landfill Cells and Surface Impoundments.*

35. Koerner, R., 1990. *Designing with Geosynthetics, 2nd Ed.* Prentice Hall, Englewood Cliffs, NJ.

36. Kraus, J.F., Genson, C.H., Erickson, A.E., Chaberlin, F.J., 1997. *Freeze-Thaw Cycling and Hydraulic Conductivity of Bentonic Barriers, Journal of Geotechnical and Geoenvironmental Engineering.*

37. Merrit, F., 1983. *Standard Handbook for Civil Engineers, Third Edition*, McGraw-Hill Inc.

38. Murphy, W.L. and Gilbert, P.A. (1985). *"Settlement and cover subsidence of hazardous waste landfills."* U.S. Environmental Protection Agency, EPA/600/2-85/035, April 1985.

39. Phillips Driscopipe, Inc., a Subsidiary of Phillips 66 Company, 1991. *Systems Design*

40. Renard, K.G., Foster, G.R., Weosies, G.A., McCool, D.K., Yoder, D.C., coordinators, 1996. *Predicting Soil Erosion by Water, A Guide to Conservation Planning with the Revised Universal Soil Loss Equation (RUSLE).* Agriculture Handbook No. 703, U.S. Department of Agriculture.

41. Schroder, P.R. (1989). *"The Hydrologic Evaluation of Landfill Performance (HELP) Model."* USACE Waterways Experiment Station, Vicksburg, MS, Office of Research and Development, U.S. Environmental Protection Agency, Cincinnati, OH, Version 2.05, September, 1989.

42. Schwope, A., Costas, P., Lyman, W., Arthur D. Little, Inc., October, 1985. *Resistance of Flexible Membrane Liners to Chemicals and Wastes.*

43. Seed, Raymond B., Mitchell, James K., and Seed, H. Bolton, 1988. *Slope Stability Failure Investigation: Landfill Unit B-19, Phase I-A, Kettleman Hills, California*, College of Engineering, Department of Civil Engineering, University of California Berkeley, California, Report No. UCB/GT/88-01.

44. Sharma, S. (1994). *"EXTABL: An Integrated Slope Stability Analysis Program for Personal Computers."* Interactive Software Designs, Inc., Moscow, ID.

45. TerraMatrix/Montgomery Watson, SM Stoller Corp., Triassic Park Waste Disposal Facility RCRA Permit Application Volumes 1 and 2, December 1997.

46. Terzaghi, K., and Peck, R., 1967. *Soils Mechanics in Engineering Practice*

47. Title 40 – Code of Federal Regulations (40 CFR), Part 264.

48. Urban Hydrology For Small Watersheds, TR-55, 1986, Soil Conservation Service, USDA.

49. U.S. Environmental Protection Agency, 1984. *Permit Applicants' Guide Manual for Hazardous Waste Land Treatment Storage and Disposal Facilities.*

50. U.S. Environmental Protection Agency, December, 1987. *Geosynthetic Design Guidance for Hazardous Waste Landfill Cells and Surface Impoundments.*

51. U.S. Environmental Protection Agency, 1988. *Lining of Waste Containment and Other Impoundment Facilities*, Part 1 of 2.

52. U.S. Environmental Protection Agency, 1988. *Lining of Waste Containment and Other Impoundment Facilities*, Part 2 of 2.

53. U.S. Environmental Protection Agency, 1988. Seminar Presentations - *Requirements for Hazardous Waste Landfill Design, Construction and Closure.*

54. U.S. Environmental Protection Agency (1989a). *"Technical Guidance Document: Final Covers on Hazardous Waste Landfills and Surface Impoundments."* EPA/530-SW-89-047, July 1899.

55. U.S. Environmental Protection Agency, (1989b). *"Seminar Publication: Requirements for Hazardous Waste Landfill Design, Construction and Closure."* EPA/625/4-89/022, August 1989.

56. U.S. Environmental Protection Agency, July, 1990. Seminars - *Design and Construction of RCRA/CERCLA Final Covers,* Washington, DC.

57. U.S. Environmental Protection Agency, 1991. *Technical Guidance Document: Inspection Techniques for the Fabrication of Geomembrane Field Seams.*

58. U.S. Environmental Protection Agency, 1992(a). *Action Leakage Rates for Leak Detection Systems.*

59. U.S. Environmental Protection Agency, 1992(b). *"Action Leakage Rates for Leak Detection Systems"*, EPA/580-R-92004, Jan. 1992, 69 p.

60. U.S. Environmental Protection Agency, 1992(c). *"Rules and Regulations"*, Federal Register, Volume 57, No. 19.

61. U.S. Environmental Protection Agency, 1996. *Technical Guidance Document,. Construction Quality Assurance for Hazardous Waste Land Disposal Facilities.*

62. Vancouver Geotechnical Society, 6th Annual Symposium, 1991. *Geosynthetics: Design and Performance., Vancouver, B.C.*

63. Warner, R.C., Schwab, P.J., 1992, *SEDCAD + Version 3.*

DESIGN DRAWINGS
TRIASSIC PARK WASTE DISPOSAL FACILITY
CHAVES COUNTY, NEW MEXICO

DECEMBER 1997 (Revised November 1998)

RCRA PART B APPLICATION

Not For Construction (See Notes Drawing 2)

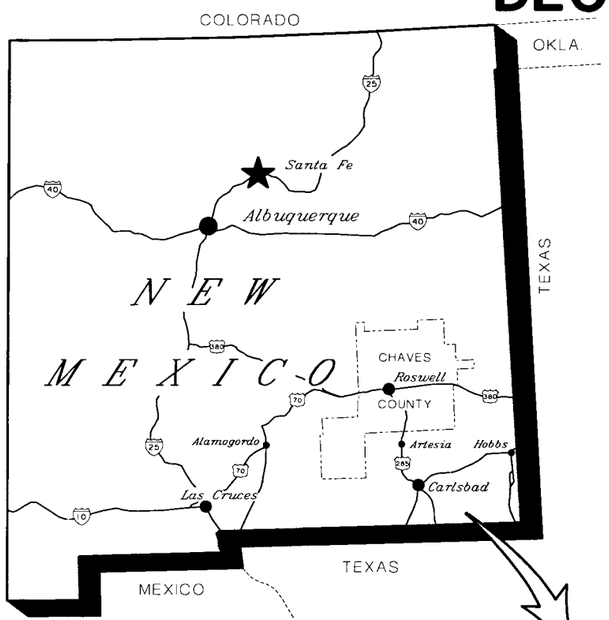

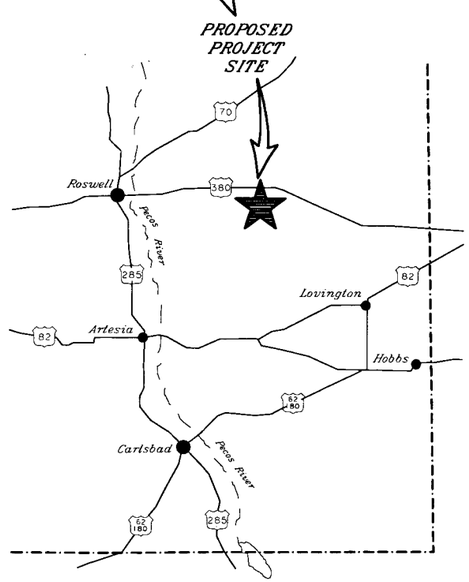

LIST OF DRAWINGS

DRAWING NO.	DRAWING SERIES
1 - 2	GENERAL
3 - 5	FACILITY
6 - 27	LANDFILL
28 - 32	EVAPORATION POND
33 - 36	STABILIZATION UNIT
37 - 39	DRUM HANDLING UNIT
40	LIQUID WASTE STORAGE AREA
41 - 43	TRUCK ROLL-OFF AREA
44	TRUCK WASH LAYOUT AND DETAILS
45	CONCRETE AND GRATING DETAILS

PATRICK G. CORSER NEW MEXICO 12236 REGISTERED PROFESSIONAL ENGINEER

PROFESSIONAL ENGINEER'S STATEMENT

I, Patrick G. Corser, state that this map was prepared under my supervision and all the information presented hereon is true and correct to the best of my knowledge and information.

11/5/98 — Patrick Corser

Date — *Patrick G. Corser, NM P.E. 12236*

PREPARED BY:

TerraMatrix
MONTGOMERY WATSON
Mining Group

Sheet 1 Of 2 Sheets
DWG.: GANDY-COVER

DRAWING No.:	REV.
1	1

DESIGN DRAWINGS
TRIASSIC PARK WASTE DISPOSAL FACILITY
CHAVES COUNTY, NEW MEXICO

DECEMBER 1997 (Revised November 1998)

RCRA PART B APPLICATION

Not For Construction (See Notes Drawing 2)

LIST OF DRAWINGS

	DRAWING NO.	DRAWING TITLE
GENERAL	1	COVER SHEET *(2 Sheets)*
	2	INDEX, LEGEND AND GENERAL NOTES
FACILITY	3	EXISTING TOPOGRAPHY
	4	FACILITY LAYOUT
	5	INITIAL SITE GRADING PLAN
LANDFILL	6	ULTIMATE LANDFILL EXCAVATION PLAN
	7	LANDFILL CROSS-SECTIONS
	8	DETAILED EXCAVATION PLAN - PHASE 1A
	9	TOP OF PROTECTIVE SOIL LAYER - PHASE 1A
	10	FILLING PLAN - PHASE 1A
	11	PHASE 1A CROSS-SECTIONS
	12	LINER DETAILS
	13	COLLECTION BASIN PLAN AND DETAILS
	14	LANDFILL ACCESS RAMP DETAILS
	15	SUMP PLAN VIEW - PHASE 1A
	16	SUMP CROSS-SECTIONS - PHASE 1A
LANDFILL	17	TYPICAL SUMP DETAIL CROSS-SECTION
	18	VADOSE, LDRS, LCRS CROSS-SECTIONS AND DETAILS
	19	CREST RISER PAD AND LEACHATE STORAGE TANK PLAN VIEW AND CROSS-SECTIONS *(2 Sheets)*
	20	VERTICAL RISER DETAILS *(2 Sheets)*
	21	FINAL GRADING PLAN - TOP OF WASTE CONTOURS
	22	FINAL GRADING PLAN - TOP OF VEGETATIVE COVER CONTOURS
	23	FINAL COVER DETAILS
	24	INTERPHASE BERM SECTION
	25	SURFACE WATER CONTROL FEATURES *(2 Sheets)*
	26	TRAFFIC PLAN *(2 Sheets)*
	27	PERIMETER ROAD DETAILS
EVAPORATION POND	28	EVAPORATION POND SUBGRADE CONTOURS
	29	EVAPORATION POND CLAY LINER CONTOURS
	30	EVAPORATION POND CROSS-SECTIONS
	31	EVAPORATION POND TRUCK DISCHARGE STATION *(2 Sheets)*
	32	EVAPORATION POND LDRS AND VADOSE PLAN AND DETAILS
STABILIZATION UNIT	33	STABILIZATION UNIT GENERAL ARRANGEMENT
	34	STABILIZATION UNIT WASTE FLOW DIAGRAM
	35	STABILIZATION UNIT BIN DESIGN
	36	STABILIZATION BIN DESIGN DETAILS *(2 Sheets)*
DRUM HANDLING UNIT	37	DRUM HANDLING UNIT GENERAL ARRANGEMENT
	38	DRUM HANDLING UNIT DETAILS
	39	DRUM HANDLING UNIT SUMP DETAILS *(2 Sheets)*
	40	LIQUID WASTE RECEIVING AND STORAGE UNIT LAYOUT
TRUCK ROLL-OFF AREA	41	TRUCK ROLL-OFF AREA DRAINAGE SURFACE CONTOURS
	42	TRUCK ROLL-OFF AREA SUBGRADE CONTOURS
	43	TRUCK ROLL-OFF AREA LINER DETAILS *(2 Sheets)*
	44	TRUCK WASH LAYOUT AND DETAILS
	45	CONCRETE AND GRATING DETAILS

PATRICK G. CORSER
NEW MEXICO
12236
REGISTERED PROFESSIONAL ENGINEER

PROFESSIONAL ENGINEER'S STATEMENT

I, Patrick G. Corser, state that this map was prepared under my supervision and all the information presented hereon is true and correct to the best of my knowledge and information.

11/5/98 — Patrick Corser
Date — *Patrick G. Corser, NM P.E. 12236*

PREPARED BY:

TerraMatrix
MONTGOMERY WATSON
Mining Group

Sheet 2 Of 2 Sheets
DWG: GANDY-COVER2

DRAWING No.	REV.
1	1

LEGEND

GENERAL LINES

- FACILITY BOUNDARY AND ACTIVE FACILITY FENCE
- 4150 EXISTING INDEX CONTOUR
- EXISTING INTERMEDIATE CONTOUR
- SUBGRADE EXCAVATION CONTOURS
- TOP OF CLAY LINER
- TOP OF SUBGRADE LAYER
- TOP OF PROTECTIVE SOIL
- TOP OF WASTE
- TOP OF EXISTING SURFACE
- EXISTING GRAVEL ROAD
- EXISTING DRAINAGE
- SECTION LINE
- EDGE OF REGRADE
- GRADE BREAK LINE
- NEW SURFACE WATER DRAINAGE DITCHES
- EDGE OF LINER

GEOSYNTHETIC TYPES

- GEOMEMBRANE
- GEOTEXTILE
- GEONET
- GEOCOMPOSITE
- GCL

MISCELLANEOUS

- FENCE
- SLOPE
- SECTION CORNER
- SURVEY CONTROL POINT
- CULVERT
- Φ NOMINAL DIAMETER

FILL PATTERNS

- CLAY LINER
- DRAINAGE GRAVEL
- FOUNDATION/PIPE BEDDING SAND
- SUBGRADE
- PREPARED SUBGRADE
- SUBBASE
- PROTECTIVE SOIL
- VEGETATIVE COVER
- CONCRETE
- ROAD-BASE
- STRUCTURAL FILL
- ALLUVIAL DEPOSITS
- UPPER DOCKUM
- LOWER DOCKUM
- WASTE
- SELECT SUBBASE

KEY

A 6|6 — A' 6|6

CROSS-SECTION LOCATION

A 6|6

DETAIL/SECTION NUMBER

DRAWING No. WHERE DETAIL/SECTION IS REFERENCED

DRAWING No. WHERE DETAIL/SECTION IS SHOWN

GENERAL NOTES

1. DESIGN DRAWINGS WERE PREPARED FOR PART "B" PERMIT SUBMITTAL.
2. DESIGN DRAWINGS TO BE USED IN CONJUNCTION WITH CONSTRUCTION SPECIFICATIONS AND CONSTRUCTION QUALITY ASSURANCE PLAN.
3. THIS SET OF DRAWINGS TO BE USED FOR PART B PERMIT APPLICATION. DRAWINGS ARE NOT TO BE USED FOR CONSTRUCTION. ADDITIONAL WORK TO BE COMPLETED TO ISSUE DRAWINGS FOR CONSTRUCTION INCLUDE THE FOLLOWING:
   - RECEIPT OF PART B PERMIT
   - SURVEY GRID POINT LISTING FOR CONSTRUCTION STAKING
   - REVIEW AND APPROVAL OF CONTRACTOR EQUIPMENT, MATERIALS, PROCEDURES, SUBMITTALS AND SHOP DRAWINGS.
4. TOPOGRAPHY FROM AERIAL SURVEYS PERFORMED AUGUST, 1997, KOOGLE & POULS ENGINEERING.
5. PROTECTIVE SOIL CONSISTS OF SELECT ONSITE SOILS.
6. GEOCOMPOSITE CONSISTS OF GEOTEXTILE BONDED TO GEONET.
7. GEOMEMBRANE IS A MINIMUM 60 mil HDPE.
8. 48-in. WIDE USED CONVEYOR BELT SHALL NOT HAVE STEEL WIRE REINFORCEMENTS OR OTHER PROTRUSIONS WHICH MAY DAMAGE UNDERLYING GEOMEMBRANE.
9. EVAPORATION POND TOPOGRAPHY ON DRAWING 29 IS TOP OF CLAY LINER.
10. EVAPORATION POND 2 TO BE CONSTRUCTED IN THE FUTURE IF REQUIRED.
11. ACTUAL SIZE, LOCATION, AND ORIENTATION OF STABILIZATION FACILITY AND ANCILLARY STRUCTURES AND EQUIPMENT TO BE DETERMINED DURING FINAL DESIGN.
12. TOTAL CAPACITY OF COLLECTION BASIN POND NEEDED: 6.0 AC-FT.
13. ELECTRICAL AND PIPING TO BE DESIGNED BY CONTRACTOR. SHOP DRAWINGS TO BE SUBMITTED FOR REVIEW AND APPROVED BY ENGINEER.
14. ALL GEOSYNTHETIC MATERIALS HAVE BEEN EXAGGERATED FOR CLARITY.
15. ALL CONCRETE SURFACES WHICH ARE EXPOSED TO POTENTIALLY HAZARDOUS MATERIALS AND ARE INTENDED AS CONTAINMENT FEATURES OR DIP PADS SHALL BE EPOXY COATED.
16. ALL PIPING WITHIN LINED FACILITIES WILL BE SINGLE WALL PIPE. DOUBLE WALL PIPE WILL BE USED FOR ALL PIPING OUTSIDE OF LINED FACILITIES.
17. LCRS - LEACHATE COLLECTION REMOVAL SYSTEM
18. LDRS - LEAKAGE DETECTION REMOVAL SYSTEM
19. USCS - UNIFIED SOIL CLASSIFICATION SYSTEM IS A SYSTEM WHICH CLASSIFIES SOIL TYPES ACCORDING TO SOIL TEXTURE AND GRAIN SIZE.
20. CONCRETE STRUCTURAL DETAILS ARE SHOWN ON DRAWING 45. THESE APPLY TO ANY CONCRETE SHOWN THROUGHOUT THE DRAWING SET.

PATRICK G. CORSER NEW MEXICO 12236 REGISTERED PROFESSIONAL ENGINEER

PROFESSIONAL ENGINEER'S STATEMENT

I, Patrick G. Corser, state that this map was prepared under my supervision and all the information presented hereon is true and correct to the best of my knowledge and information.

11/5/98 Date — Patrick G. Corser, NM Reg. No. 12236

Not For Construction

REV. No	REVISIONS	DATE	DESIGN BY	DRAWN BY	REVIEWED AND SIGNED BY
1	November 1998 Revision	10/29/98	J.Pellicer	T.Smith	P.Corser
0	PART B PERMIT APPLICATION	12/12/97	PGC/JPP	K.Conrath	P.Corser

TRIASSIC PARK WASTE DISPOSAL FACILITY

DRAWING TITLE: ***INDEX, LEGEND AND GENERAL NOTES***

TerraMatrix MONTGOMERY WATSON Mining Group

Sheet 1 Of 1 Sheets

SCALE: Not to Scale — DRAWING No. 2

PROJECT NUMBER: 602-0200

AutoCAD FILE: GANDY-

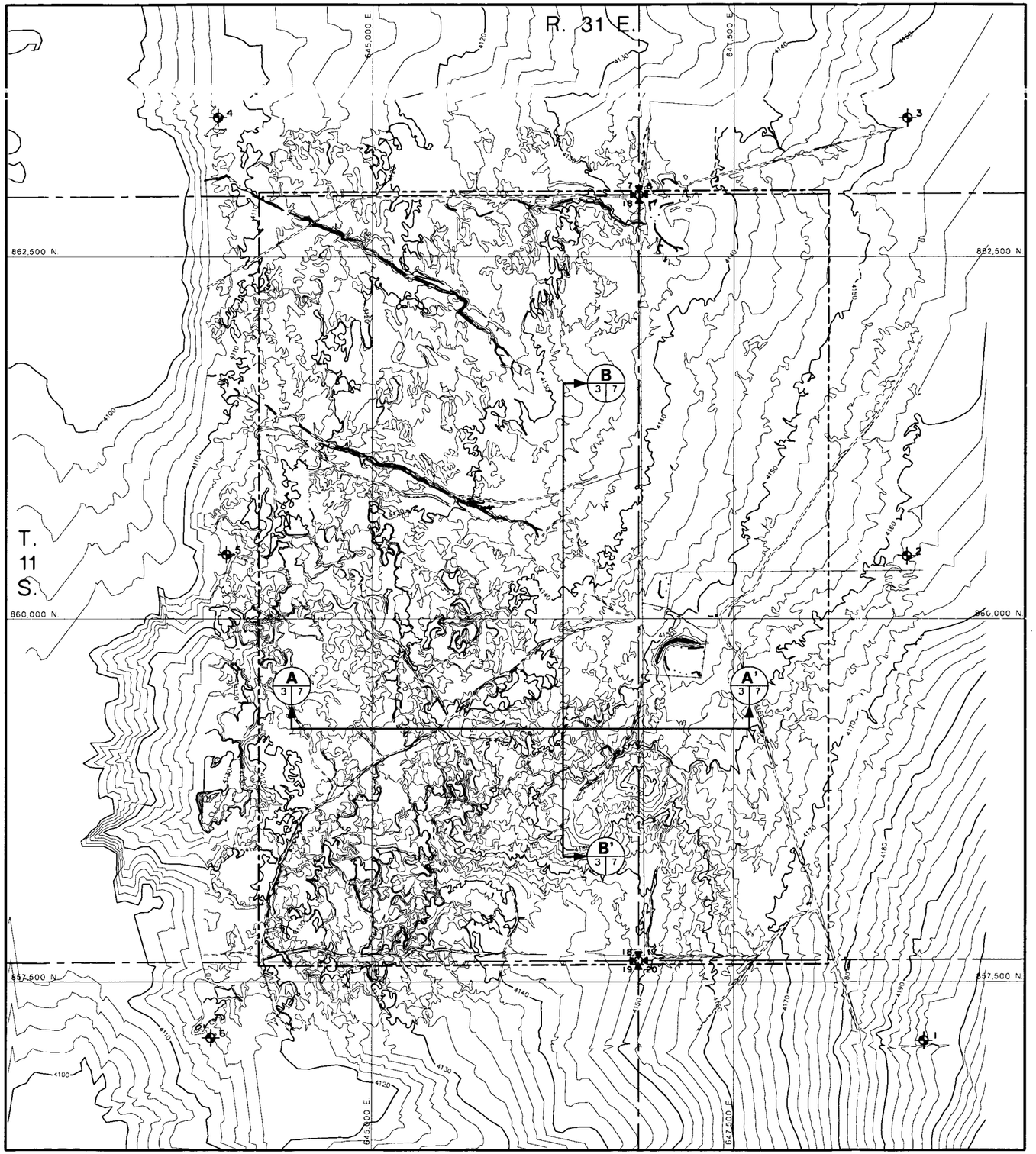

SURVEY CONTROL POINTS

CONTROL POINT NUMBER	NORTHING	EASTING	ELEVATION
1	857,099.19	648,823.16	4,197.55
2	860,435.24	648,704.91	4,161.92
3	863,453.55	648,706.31	4,152.96
4	863,454.95	643,940.29	4,105.99
5	860,445.06	644,000.06	4,113.51
6	857,114.96	643,893.71	4,116.20

NOTES:

1. FOR GENERAL NOTES AND LEGEND INFORMATION SEE DRAWING No. 2, "INDEX, LEGEND AND GENERAL NOTES".
2. TOPOGRAPHY FROM AERIAL SURVEY PERFORMED AUGUST 1997 BY KOOGLE AND FOULS ENGINEERING. ADDITIONAL TOPO TAKEN FROM MESCALERO POINT, NEW MEXICO 7.5 MINUTE SERIES, DATED 1973.
3. SURVEY CONTROL POINTS SET IN FIELD WITH REBAR AND CAP BY JOHN WEST ENGINEERING COMPANY, AUGUST 1997.

SCALE

400' 0 400' 800'

CONTOUR INTERVAL 2 FT.

Not For Construction

REV No.	REVISIONS	DATE	DESIGN BY	DRAWN BY	REVIEWED AND SIGNED BY
0	PART B PERMIT APPLICATION	12/12/97	PGC/JPP	T.Smith	P.Corser

PATRICK G. CORSER NEW MEXICO 12236 REGISTERED PROFESSIONAL ENGINEER

PROFESSIONAL ENGINEER'S STATEMENT

I, Patrick G. Corser, state that this map was prepared under my supervision and all the information presented hereon is true and correct to the best of my knowledge and information.

11/5/98 — Patrick G. Corser, NM P.E. 12236

Date

TRIASSIC PARK WASTE DISPOSAL FACILITY

DRAWING TITLE:

EXISTING TOPOGRAPHY

TerraMatrix
MONTGOMERY WATSON
Mining Group

Sheet 1 Of 1 Sheets

SCALE: AS NOTED

DRAWING No. 3

DWG ____ PROJECT NUMBER 602-0200

AutoCAD FILE GAND

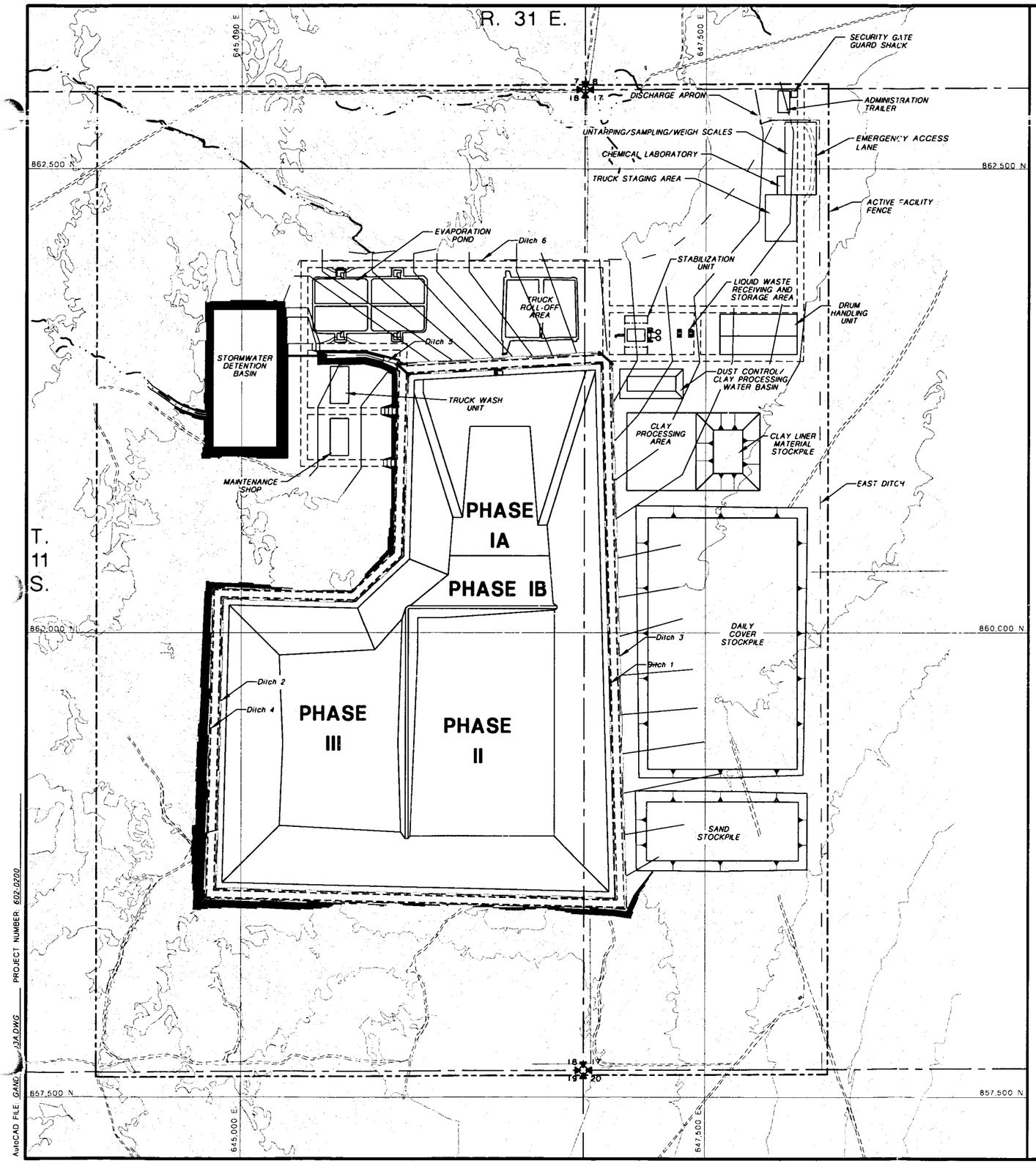

LEGEND

EXISTING CONTOUR
REGRADED CONTOUR

NOTES:
1. FOR GENERAL NOTES AND LEGEND INFORMATION SEE DRAWING No. 2, "INDEX, LEGEND AND GENERAL NOTES".
2. TOPOGRAPHY FROM AERIAL SURVEYS PERFORMED AUGUST 1997 BY KOOGLE AND POULS ENGINEERING.

N

SCALE
300' 0 300' 600'
CONTOUR INTERVAL 2 FT.

Not For Construction

REV No.	REVISIONS	DATE	DESIGN BY	DRAWN BY	REVIEWED AND SIGNED BY
1	November 1998 revision	10/29/98	J.Pellicer	T.Smith	P.Corser
0	PART B PERMIT APPLICATION	12/12/97	PGC/JPP	T.Smith	P.Corser

PATRICK G. CORSER NEW MEXICO 12236 REGISTERED PROFESSIONAL ENGINEER

PROFESSIONAL ENGINEER'S STATEMENT

I, Patrick G. Corser, state that this map was prepared under my supervision and all the information presented hereon is true and correct to the best of my knowledge and information.

11/5/98 — Patrick Corser
Date — Patrick G. Corser, NM P.E. 12236

TRIASSIC PARK WASTE DISPOSAL FACILITY

DRAWING TITLE:

FACILITY LAYOUT

TerraMatrix
MONTGOMERY WATSON
Mining Group

Sheet 1 Of 1 Sheets
SCALE: AS NOTED
DRAWING No. 4

AutoCAD FILE: GANDJA.DWG PROJECT NUMBER: 602-0200

LEGEND

REGRADE AREA - CUT - 229,200 cy

REGRADE AREA - FILL - 75,100 cy

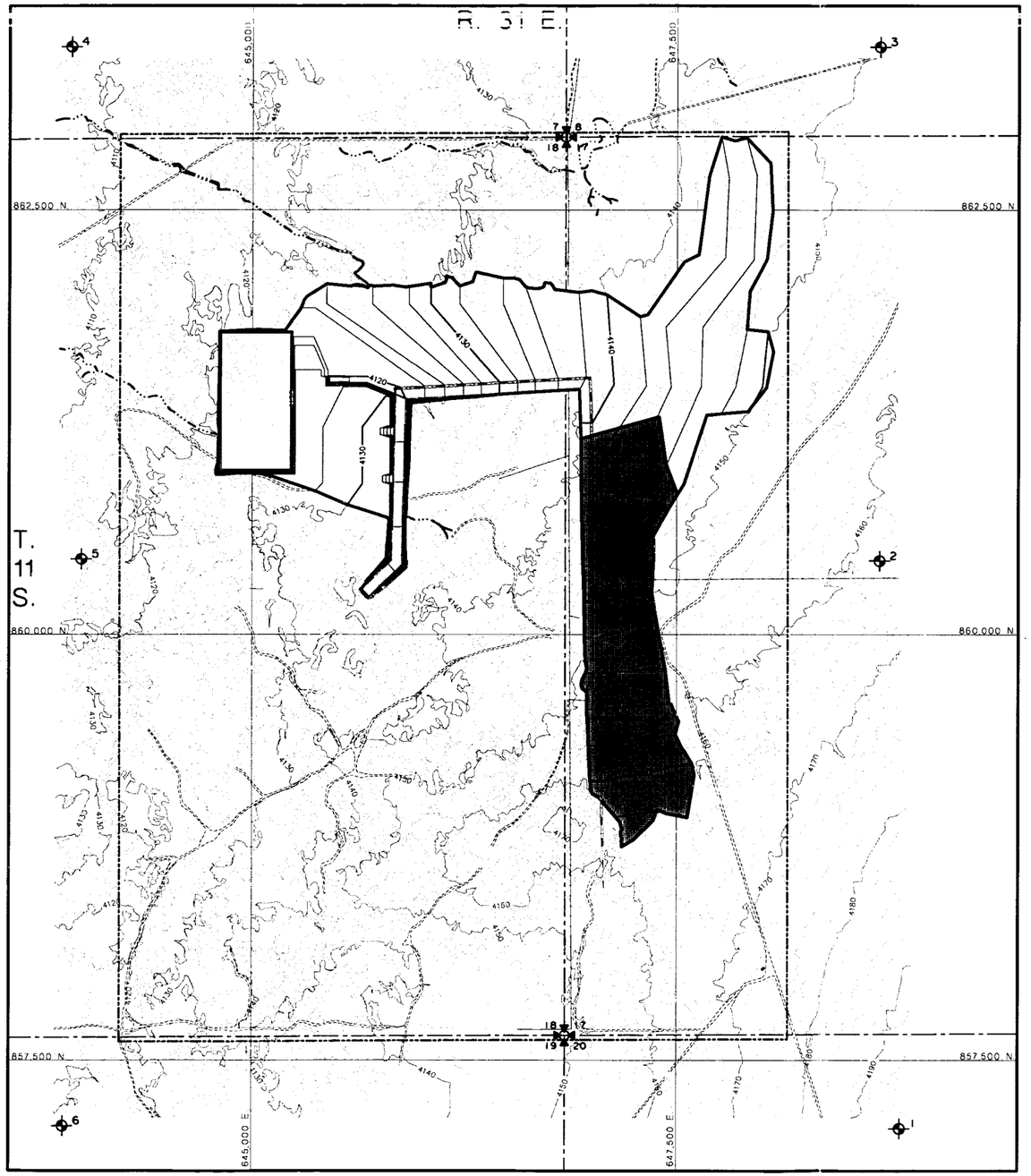

NOTES:

1. FOR GENERAL NOTES AND LEGEND INFORMATION SEE DRAWING No. 2, "INDEX, LEGEND AND GENERAL NOTES".
2. TOPOGRAPHY FROM AERIAL SURVEYS PERFORMED AUGUST 1997 BY KOOGLE AND POULS ENGINEERING.
3. SURVEY CONTROL POINTS SET IN FIELD WITH REBAR AND CAP BY BY JOHN WEST ENGINEERING COMPANY, AUGUST 1997.

N

SCALE

400' 0 400' 800'

CONTOUR INTERVAL 2 FT.

Not For Construction

REV No.	REVISIONS	DATE	DESIGN BY	DRAWN BY	REVIEWED AND SIGNED BY
0	PART B PERMIT APPLICATION	12/12/97	PGC/JPP	T.Smith	P.Corser

PATRICK G. CORSER NEW MEXICO 12236 REGISTERED PROFESSIONAL ENGINEER

PROFESSIONAL ENGINEER'S STATEMENT

I, Patrick G. Corser, state that this map was prepared under my supervision and all the information presented hereon is true and correct to the best of my knowledge and information.

1/5/98 *Patrick Corser*

Date *Patrick G. Corser, NM P.E. 12236*

TRIASSIC PARK WASTE DISPOSAL FACILITY

DRAWING TITLE:

INITIAL SITE GRADING PLAN

TerraMatrix
MONTGOMERY WATSON
Mining Group

Sheet 1 Of 1 Sheets

SCALE: AS NOTED

DRAWING No. 5

AutoCAD FILE: GAND_E.DWG PROJECT NUMBER: 602-0200

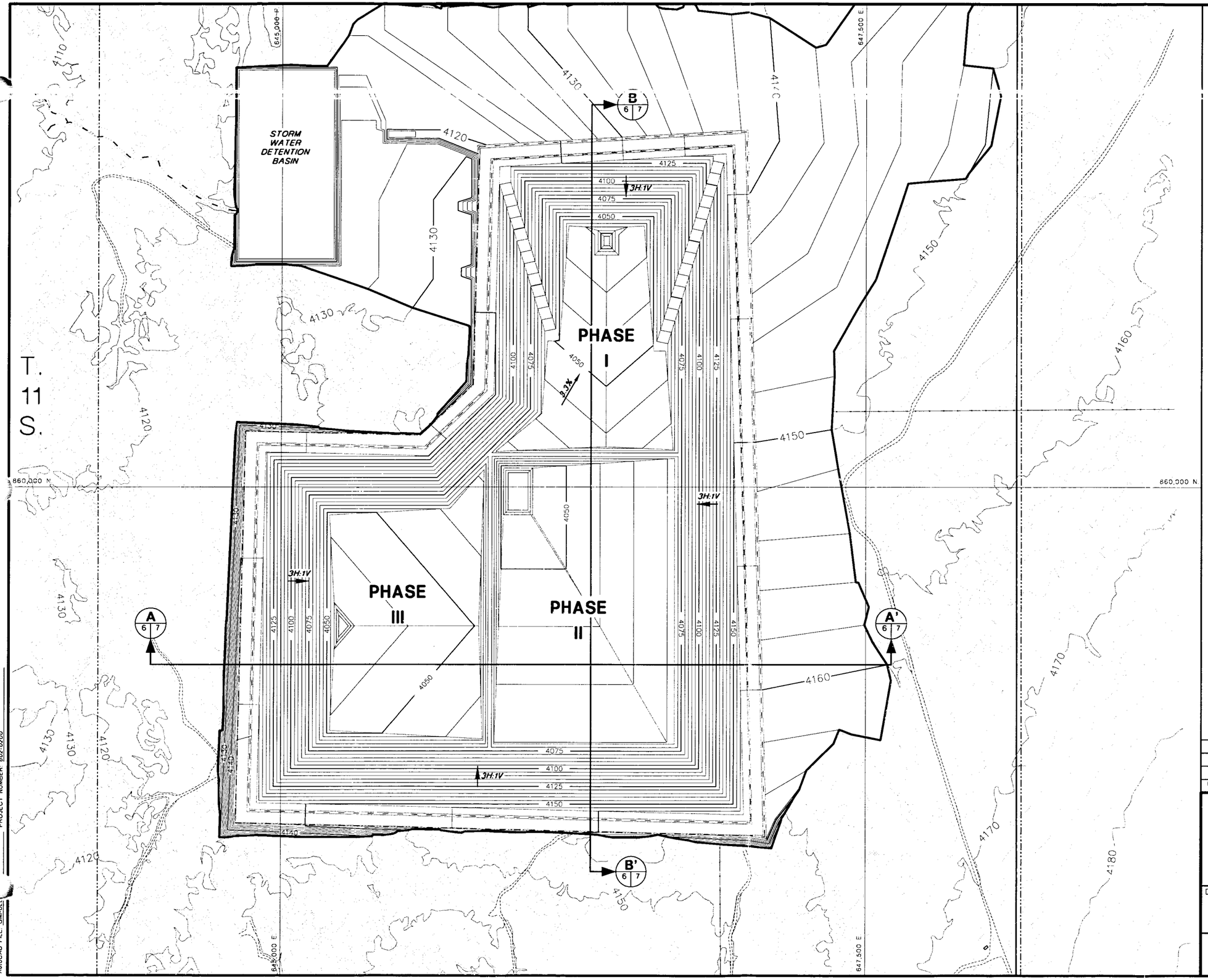

NOTES:

1. FOR GENERAL NOTES AND LEGEND INFORMATION SEE
2. TOPOGRAPHY FROM AERIAL SURVEYS PERFORMED AUGUST 1997 BY KOOGLE AND POULS ENGINEERING.
3. BASE GRADES FOR PHASES II AND III TO BE MODIFIED PRIOR TO CONSTRUCTION TO ACHIEVE A MINIMUM OF 2%.

PATRICK G. CORSER
NEW MEXICO
12236
REGISTERED PROFESSIONAL ENGINEER

PROFESSIONAL ENGINEER'S STATEMENT

I, Patrick G. Corser, state that this map was prepared under my supervision and all the information presented herein is true and correct to the best of my knowledge and information.

11/5/98 — Patrick G. Corser
Date — Patrick G. Corser, NM P.E. 12236

SCALE

200' 0 200' 400'

CONTOUR INTERVAL 5 FT.
SURFACE TOPOGRAPHY CONTOUR INTERVAL 2 FT

Not For Construction

REV. No.	REVISIONS	DATE	DESIGN BY	DRAWN BY	REVIEWED AND SIGNED BY
1	November 1998 Revision	10/29/98	J.Pellicer	T.Smith	P.Corser
0	PART B PERMIT APPLICATION	12/12/97	PGC/JPP	EWS	P.Corser

TRIASSIC PARK WASTE DISPOSAL FACILITY

DRAWING TITLE:

ULTIMATE LANDFILL EXCAVATION PLAN

TerraMatrix
MONTGOMERY WATSON
Mining Group

Sheet 1 Of 1 Sheets

SCALE: AS NOTED

DRAWING No. 6

PROJECT NUMBER: 602-0200

AutoCAD FILE: GMI-UL

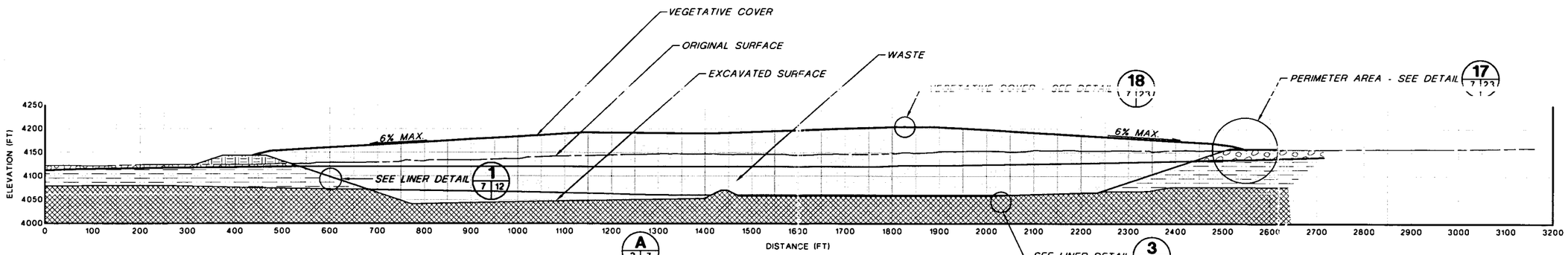

A 3 7
A 6 7
A 21 7
A 22 7

CROSS-SECTION A-A'

HORIZONTAL SCALE
0 120' 240'

VERTICAL SCALE
0 120' 240'

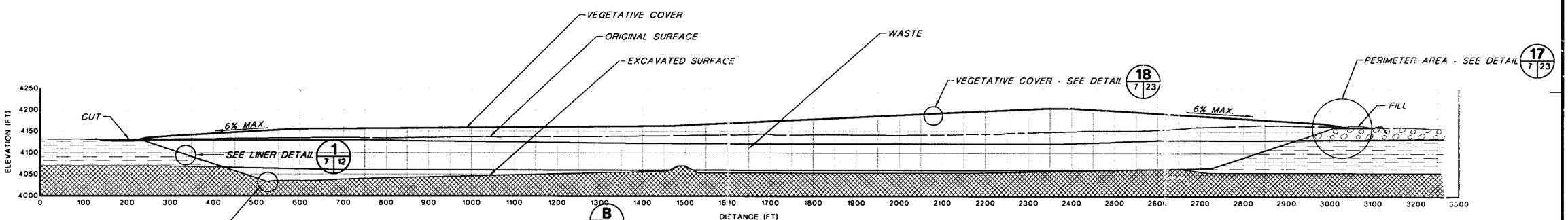

B 3 7
B 6 7
B 21 7
B 22 7

CROSS-SECTION B-B'

HORIZONTAL SCALE
0 120' 240'

VERTICAL SCALE
0 120' 240'

NOTES:
1. CROSS-SECTIONS NOT CUT PERPENDICULAR TO COVER CONTOURS; THEREFORE TRUE COVER SLOPES NOT SHOWN.
2. EXTENT OF GEOLOGIC UNITS IS INFERRED BASED ON SUBSURFACE EXPLORATION PROGRAM.
3. SYMBOLS FOR GEOLOGIC UNITS ARE SHOWN ON DRAWING 2.
4. FOR GENERAL NOTES AND LEGEND INFORMATION SEE DRAWING No. 2, "INDEX, LEGEND AND GENERAL NOTES".

PATRICK G. CORSER NEW MEXICO 12236 REGISTERED PROFESSIONAL ENGINEER

PROFESSIONAL ENGINEER'S STATEMENT

I, Patrick G. Corser, state that this map was prepared under my supervision and all the information presented hereon is true and correct to the best of my knowledge and information.

11/5/98 Patrick G. Corser
Date Patrick G. Corser, NM P.E. 12236

Not For Construction

REV No	REVISIONS	DATE	DESIGN BY	DRAWN BY	REVIEWED AND SIGNED BY
1	NOVEMBER 1998 REVISION	10/29/98	J.Pellicer	T.Smith	P.Corser
0	PART B PERMIT APPLICATION	12/12/97	PGC/JPP	T.Smith	P.Corser

TRIASSIC PARK
WASTE DISPOSAL FACILITY

DRAWING TITLE:

LANDFILL CROSS-SECTIONS

TerraMatrix
MONTGOMERY WATSON
Mining Group

Sheet 1 Of 1 Sheets
SCALE: AS NOTED
DRAWING No. 7

AutoCAD FILE GANDY DWG PROJECT NUMBER 622-0200

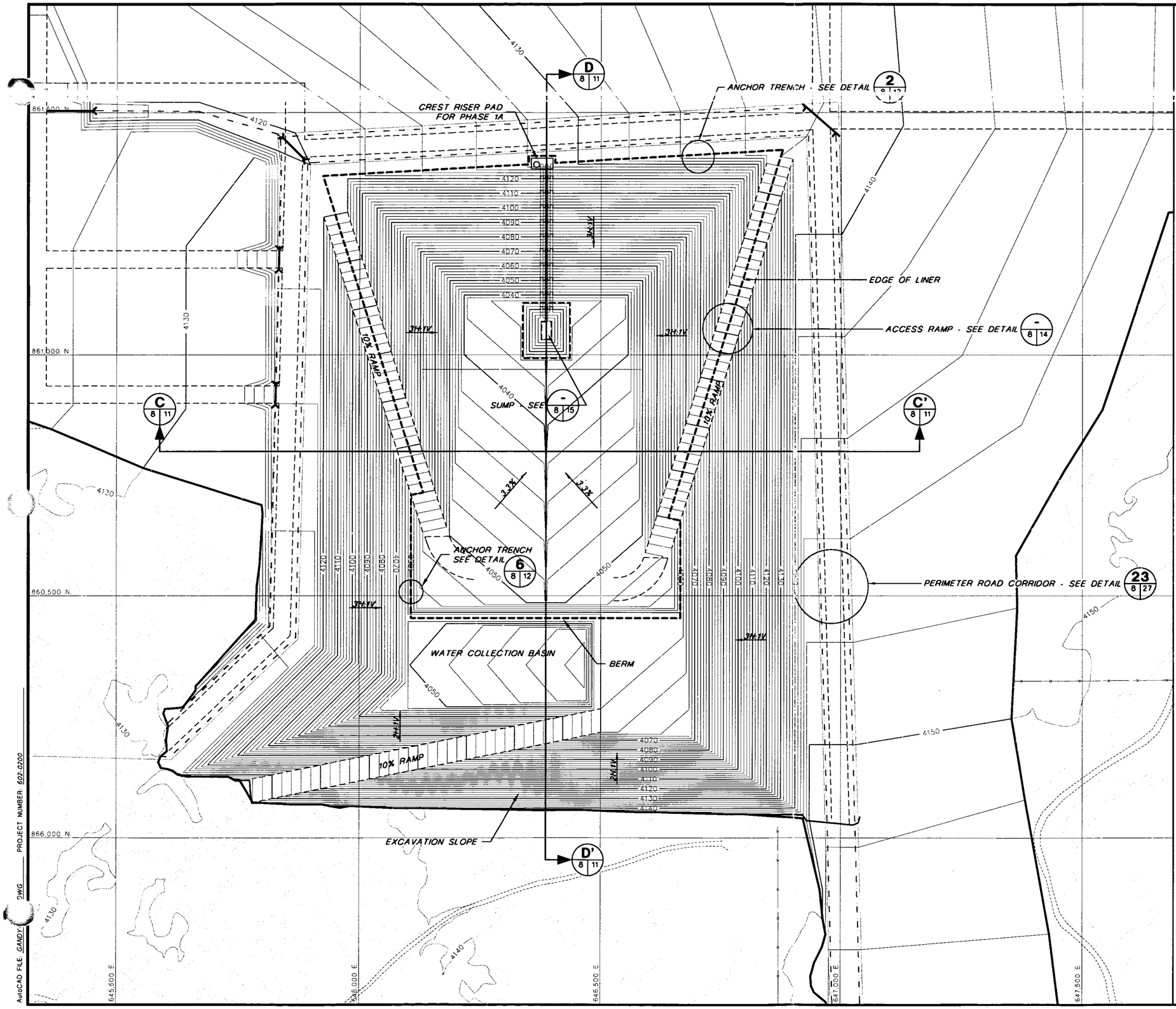

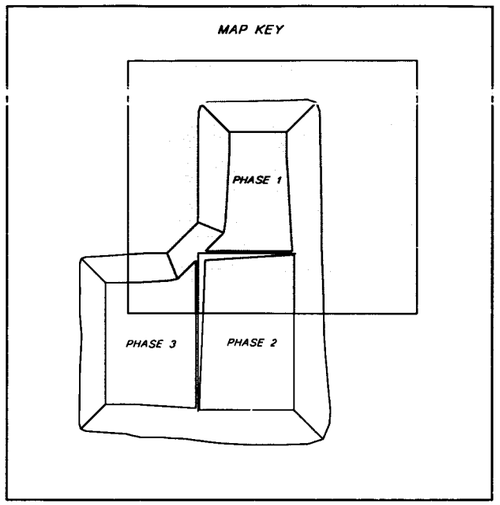

NOTES:
1. FOR GENERAL NOTES AND LEGEND INFORMATION SEE DRAWING No. 2, "INDEX, LEGEND AND GENERAL NOTES".
2. TOPOGRAPHY FROM AERIAL SURVEYS PERFORMED AUGUST 1997 BY KOOGLE AND POULS ENGINEERING.

PATRICK G. CORSER NEW MEXICO 12236 REGISTERED PROFESSIONAL ENGINEER

PROFESSIONAL ENGINEER'S STATEMENT

I, Patrick G. Corser, state that this map was prepared under my supervision and all the information presented hereon is true and correct to the best of my knowledge and information.

11/5/98 Date — Patrick G. Corser, NM P.E. 12236

SCALE

100' 0 100' 200'

CONTOUR INTERVAL 2 FT.

Not For Construction

REV No.	REVISIONS	DATE	DESIGN BY	DRAWN BY	REVIEWED AND SIGNED BY
1	NOVEMBER 1998 REVISION	10/29/98	J.Pelicer	T.Smith	P.Corser
0	PART B PERMIT APPLICATION	12/12/97	PGC/JPP	T.Smith	P.Corser

TRIASSIC PARK
WASTE DISPOSAL FACILITY

DRAWING TITLE:
DETAILED EXCAVATION PLAN - PHASE 1A

TerraMatrix
MONTGOMERY WATSON
Mining Group

Sheet 1 Of 1 Sheets
SCALE: AS NOTED
DRAWING No. 8

AutoCAD FILE: GANDY2.DWG PROJECT NUMBER: 602-0200

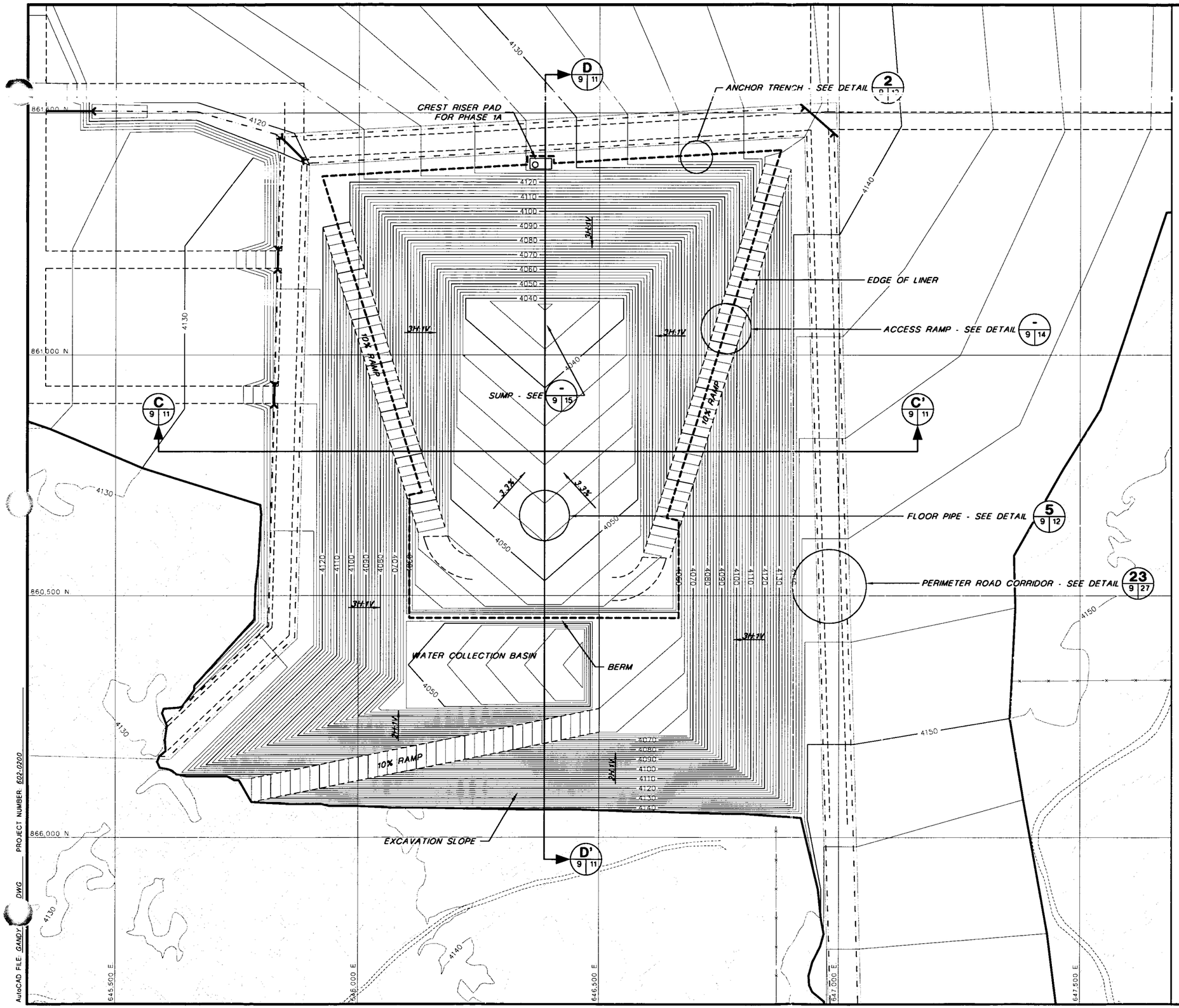

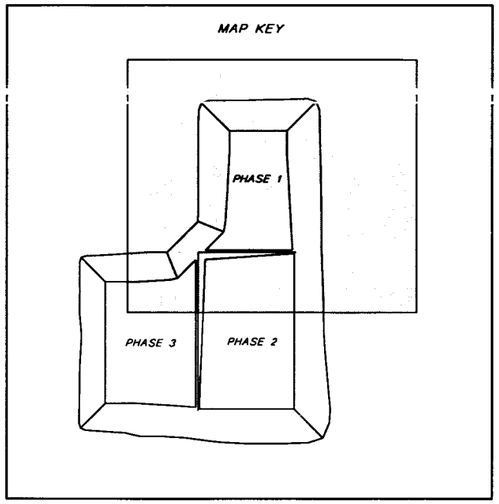

NOTES:
1. FOR GENERAL NOTES AND LEGEND INFORMATION SEE DRAWING No. 2, "INDEX, LEGEND AND GENERAL NOTES".
2. TOPOGRAPHY FROM AERIAL SURVEYS PERFORMED AUGUST 1997 BY KOOGLE AND POULS ENGINEERING.

PATRICK G. CORSER NEW MEXICO 12236 REGISTERED PROFESSIONAL ENGINEER

PROFESSIONAL ENGINEER'S STATEMENT

I, Patrick G. Corser, state that this map was prepared under my supervision and all the information presented hereon is true and correct to the best of my knowledge and information.

11/5/98 — Patrick G. Corser, NM P.E. 12236
Date

SCALE

100' 0 100' 200'

CONTOUR INTERVAL 2 FT.

Not For Construction

REV No.	REVISIONS	DATE	DESIGN BY	DRAWN BY	REVIEWED AND SIGNED BY
1	NOVEMBER 1998 REVISION	10/29/98	J.Pellicer	T.Smith	P.Corser
0	PART B PERMIT APPLICATION	12/12/97	PGC/JJP	T.Smith	P.Corser

TRIASSIC PARK
WASTE DISPOSAL FACILITY

DRAWING TITLE:
TOP OF PROTECTIVE SOIL LAYER - PHASE 1A

TerraMatrix
MONTGOMERY WATSON
Mining Group

Sheet 1 Of 1 Sheets
SCALE: AS NOTED
DRAWING No. 9

AutoCAD FILE: GANDY DWG PROJECT NUMBER: 602-0200

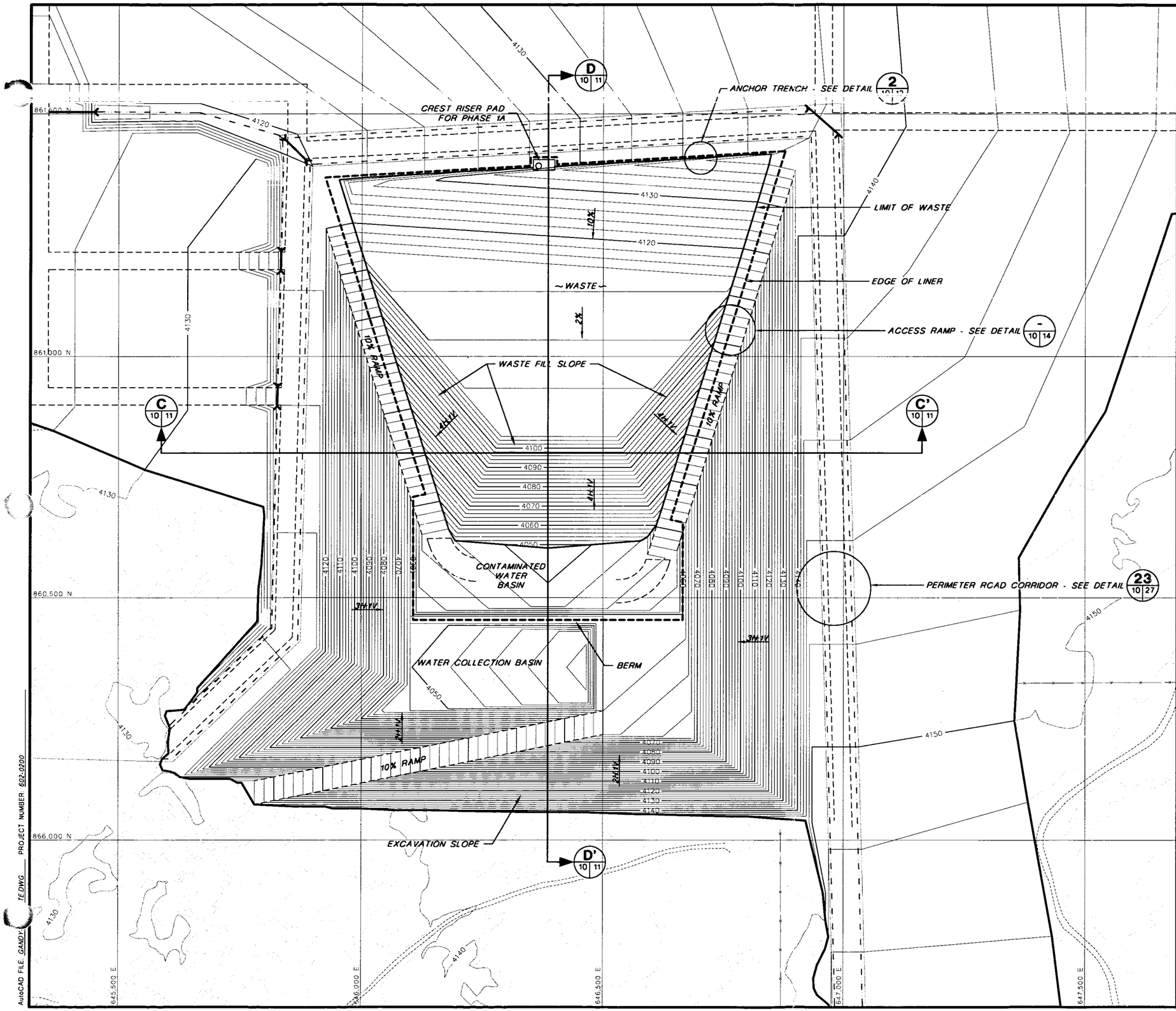

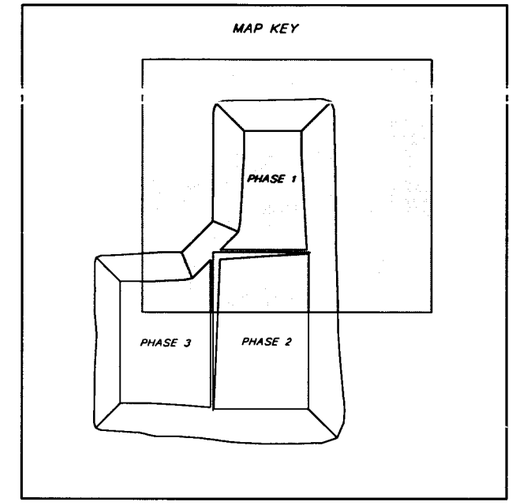

NOTES:
1. FOR GENERAL NOTES AND LEGEND INFORMATION SEE DRAWING No. 2, "INDEX, LEGEND AND GENERAL NOTES".
2. TOPOGRAPHY FROM AERIAL SURVEYS PERFORMED AUGUST 1997 BY KOOGLE AND POULS ENGINEERING.
3. WASTE FILL VOLUME FOR PHASE 1A: 553,200 CY

PATRICK G. CORSER NEW MEXICO 12236 REGISTERED PROFESSIONAL ENGINEER

PROFESSIONAL ENGINEER'S STATEMENT

I, Patrick G. Corser, state that this map was prepared under my supervision and all the information presented hereon is true and correct to the best of my knowledge and information.

11/5/98 Patrick G. Corser
Date Patrick G. Corser, NM P.E. 12236

SCALE
100' 0 100' 200'
CONTOUR INTERVAL 2 FT.

Not For Construction

REV No	REVISIONS	DATE	DESIGN BY	DRAWN BY	REVIEWED AND SIGNED BY
1	NOVEMBER 1998 REVISION	10/29/98	J.Pellicer	T.Smith	P.Corser
0	PART B PERMIT APPLICATION	12/12/97	PGC/JPP	T.Smith	P.Corser

TRIASSIC PARK
WASTE DISPOSAL FACILITY

DRAWING TITLE:
FILLING PLAN - PHASE 1A

TerraMatrix
MONTGOMERY WATSON
Mining Group

Sheet 1 Of 1 Sheets
SCALE: AS NOTED
DRAWING No. 10

AutoCAD FILE GANDY_TE.DWG PROJECT NUMBER 602-0200

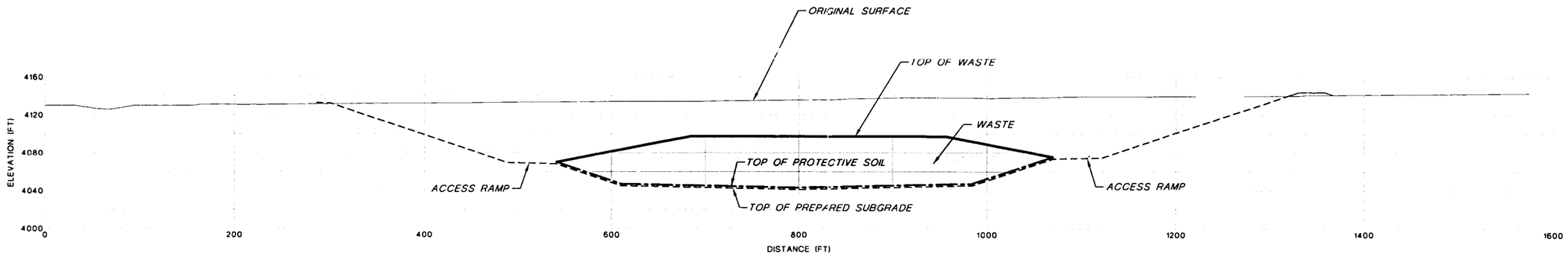

C 8 11 C 9 11 C 10 11

PHASE 1A CROSS-SECTION C-C'

HORIZONTAL SCALE
0 60' 120'

VERTICAL SCALE
0 60' 120'

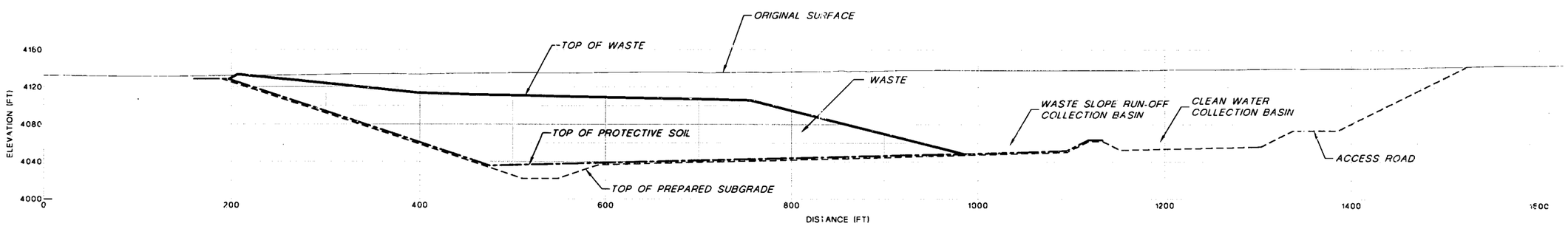

D 8 11 D 9 11 D 10 11

PHASE 1A CROSS-SECTION D-D'

HORIZONTAL SCALE
0 60' 120'

VERTICAL SCALE
0 60' 120'

NOTE:
FOR GENERAL NOTES AND LEGEND INFORMATION SEE DRAWING No. 2, "INDEX, LEGEND AND GENERAL NOTES".

PATRICK G. CORSER NEW MEXICO 12236 REGISTERED PROFESSIONAL ENGINEER

PROFESSIONAL ENGINEER'S STATEMENT

I, Patrick G. Corser, state that this map was prepared under my supervision and all the information presented hereon is true and correct to the best of my knowledge and information.

11/5/98 — Date

Patrick G. Corser, NM P.E. 12236

Not For Construction

REV. No.	REVISIONS	DATE	DESIGN BY	DRAWN BY	REVIEWED AND SIGNED BY
1	NOVEMBER 1998 REVISION	10/28/98	J.Pellicer	T.Smith	P.Corser
0	PART B PERMIT APPLICATION	12/12/97	PGC/JPP	T.Smith	P.Corser

TRIASSIC PARK
WASTE DISPOSAL FACILITY

DRAWING TITLE:

PHASE 1A CROSS-SECTIONS

TerraMatrix
MONTGOMERY WATSON
Mining Group

Sheet 1 Of 1 Sheets
SCALE: AS NOTED
DRAWING No. 11

AutoCAD FILE: GANDY\XSEC.DWG PROJECT NUMBER: 602-0200

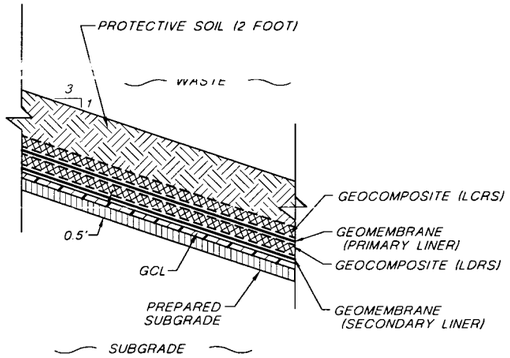

SLOPE
1 (7|12) LINER SYSTEM DETAIL
Not To Scale

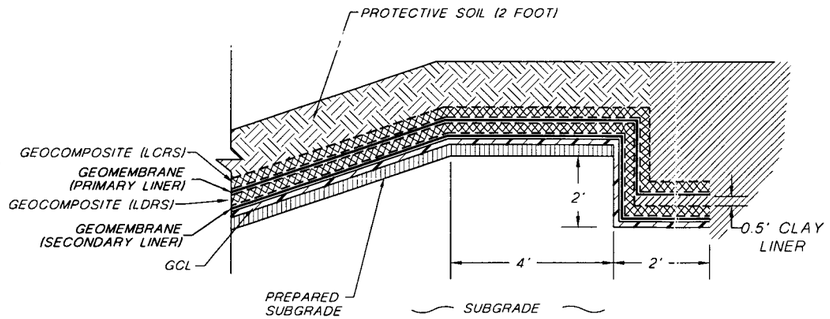

2 (8|12) 2 (9|12) 2 (10|12) 2 (23|12) 2 (24|12) LINER ANCHOR TRENCH DETAIL
Not To Scale

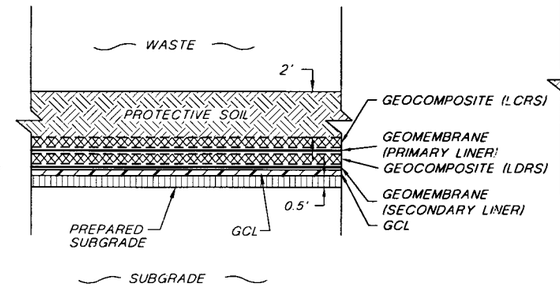

FLOOR
3 (7|12) 3 (24|12) LINER SYSTEM DETAIL
Not To Scale

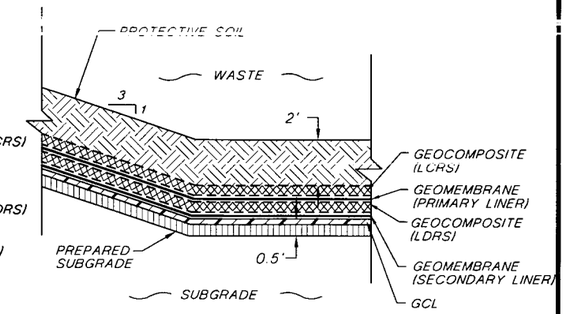

TOE OF SLOPE
4 (7|12) LINER SYSTEM DETAIL
Not To Scale

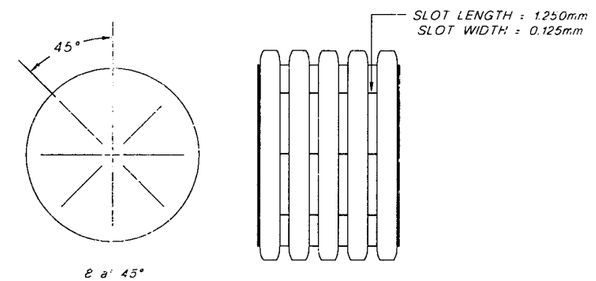

7 (12|12) ADS N-12 PIPE SLOT DETAIL
Not To Scale

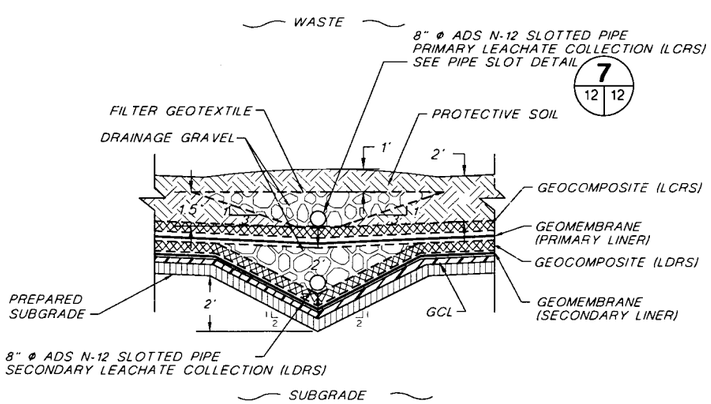

5 (9|12) FLOOR PIPE DETAIL
Not To Scale

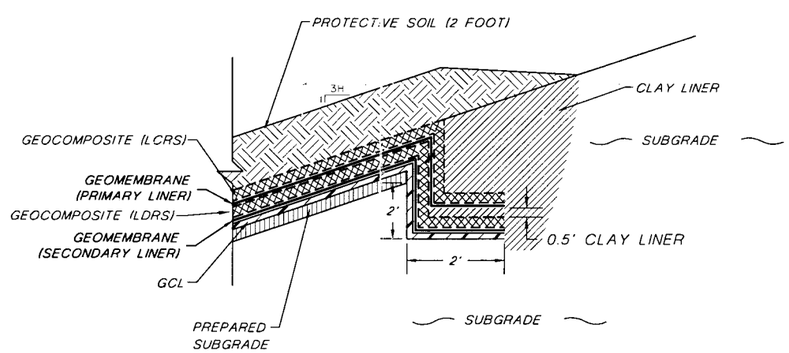

6 (8|12) 6 (13|12) SLOPE ANCHOR TRENCH
Not To Scale

NOTE:
FOR GENERAL NOTES AND LEGEND INFORMATION SEE DRAWING No. 2. "INDEX, LEGEND AND GENERAL NOTES".

PATRICK G. CORSER NEW MEXICO 12236 REGISTERED PROFESSIONAL ENGINEER

PROFESSIONAL ENGINEER'S STATEMENT
I, Patrick G. Corser, state that this map was prepared under my supervision and all the information presented herein is true and correct to the best of my knowledge and information.
11/5/98 — Patrick G. Corser
Date — Patrick G. Corser, NM P.E. 12236

Not For Construction

REV No	REVISIONS	DATE	DESIGN BY	DRAWN BY	REVIEWED AND SIGNED BY
1	NOVEMBER 1998 REVISION	10/29/98	J.Pellicer	T.Smith	P.Corser
0	PART B PERMIT APPLICATION	12/12/97	PGC/JPP	K.Conrath	P.Corser

TRIASSIC PARK
WASTE DISPOSAL FACILITY

DRAWING TITLE:
LINER DETAILS

TerraMatrix
MONTGOMERY WATSON
Mining Group

Sheet 1 Of 1 Sheets
SCALE: As Shown
DRAWING No. 12

PROJECT NUMBER 602.0200
AutoCAD FILE: LNRDTL

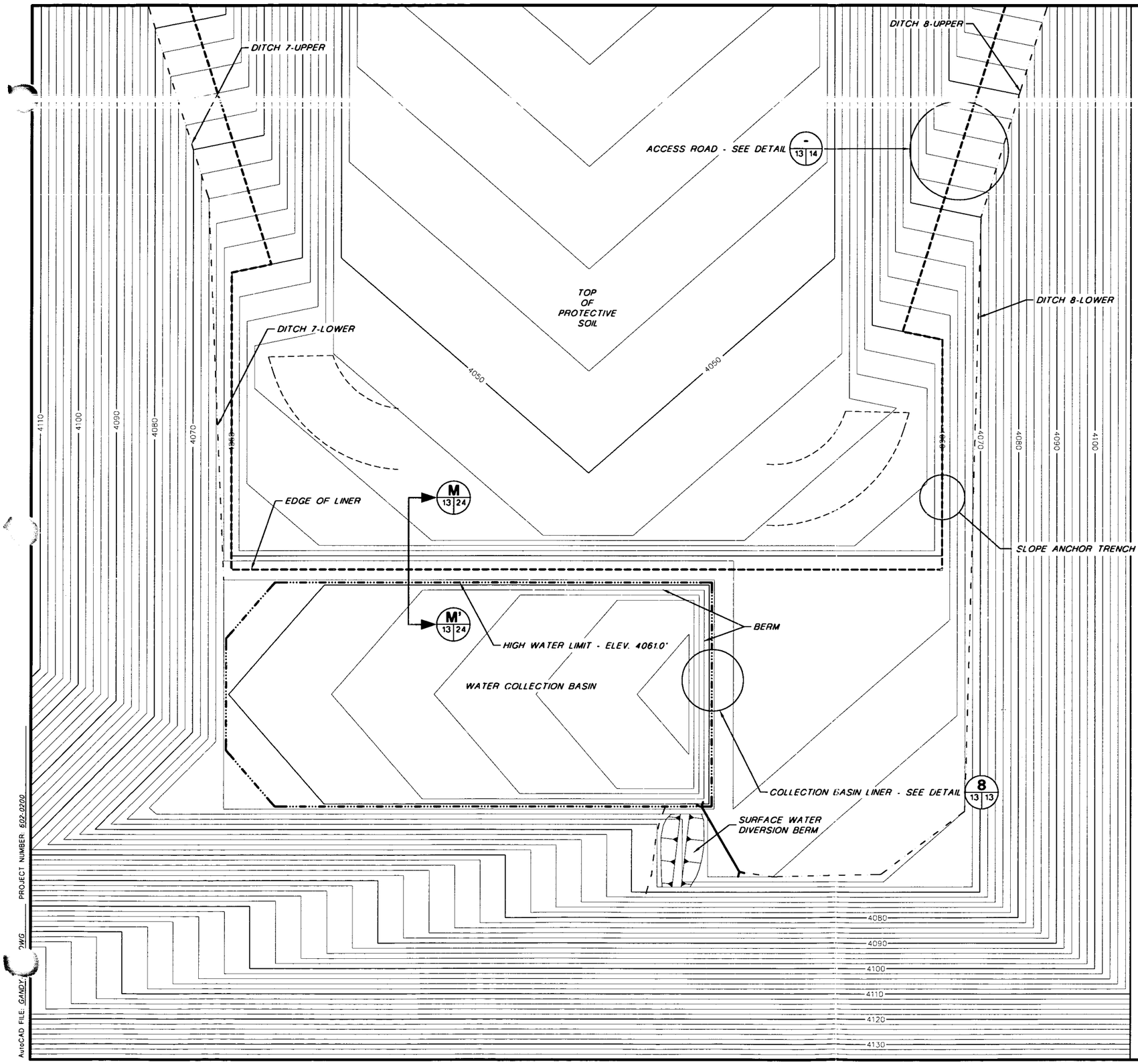

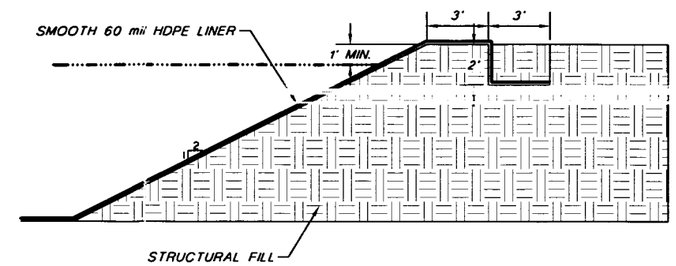

8 13 13 COLLECTION BASIN BERM DETAIL

NOT TO SCALE

NOTE:
FOR GENERAL NOTES AND LEGEND INFORMATION SEE DRAWING No. 2, "INDEX, LEGEND AND GENERAL NOTES".

PATRICK G. CORSER NEW MEXICO 12236 REGISTERED PROFESSIONAL ENGINEER

PROFESSIONAL ENGINEER'S STATEMENT

I, Patrick G. Corser, state that this map was prepared under my supervision and all the information presented hereon is true and correct to the best of my knowledge and information.

11/5/98 — Patrick G. Corser, NM P.E. 12236
Date

Not For Construction

REV. No.	REVISIONS	DATE	DESIGN BY	DRAWN BY	REVIEWED AND SIGNED BY
1	NOVEMBER 1998 REVISION	10/29/98	J.Pellicer	T.Smith	P.Corser
0	PART B PERMIT APPLICATION	12/12/97	PGC/JPP	T.Smith	P.Corser

N

SCALE
40' 0 40' 80'
CONTOUR INTERVAL 2 FT.

TRIASSIC PARK
WASTE DISPOSAL FACILITY

DRAWING TITLE:
COLLECTION BASIN PLAN AND DETAILS

TerraMatrix
MONTGOMERY WATSON
Mining Group

Sheet 1 Of 1 Sheets
SCALE: AS NOTED
DRAWING No. 13

AutoCAD FILE: GANDY.DWG PROJECT NUMBER: 602-0200

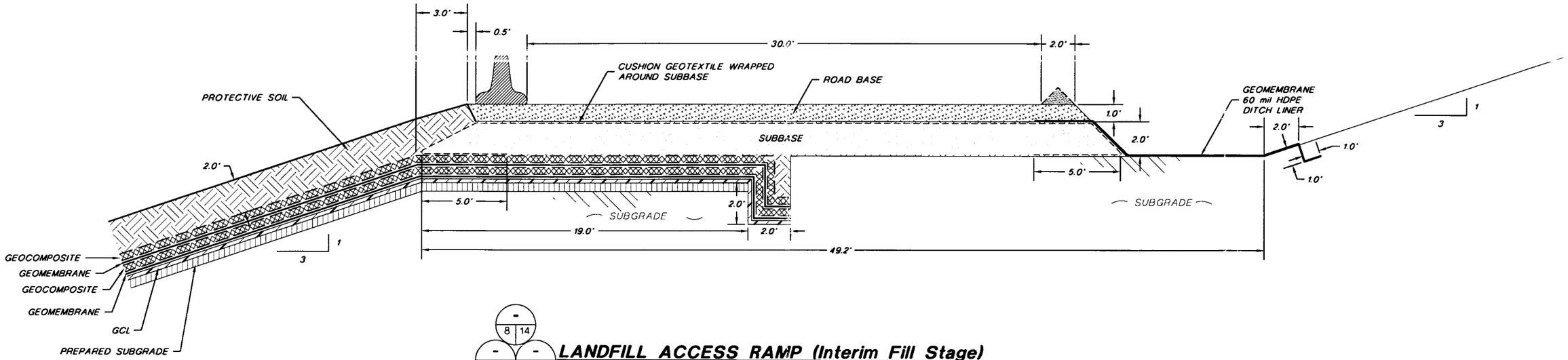

8 | 14
9 | 14 10 | 14
13 | 14

LANDFILL ACCESS RAMP (Interim Fill Stage)

SCALE
0 3 6
Feet

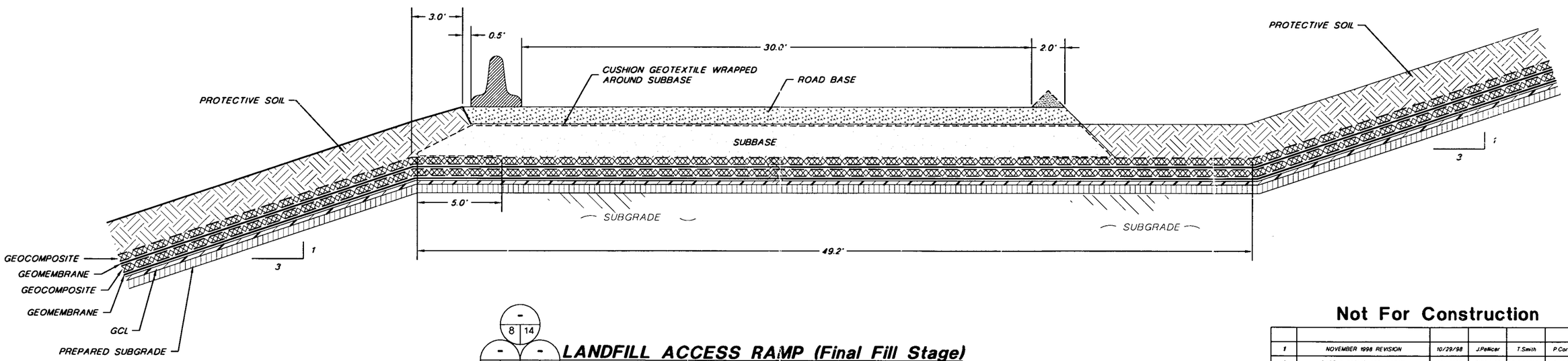

8 | 14
9 | 14 10 | 14
13 | 14

LANDFILL ACCESS RAMP (Final Fill Stage)

SCALE
0 3 6
Feet

NOTE:
FOR GENERAL NOTES AND LEGEND INFORMATION SEE DRAWING No. 2, "INDEX, LEGEND AND GENERAL NOTES".

PATRICK G. CORSER NEW MEXICO 12236 REGISTERED PROFESSIONAL ENGINEER

PROFESSIONAL ENGINEER'S STATEMENT

I, Patrick G. Corser, state that this map was prepared under my supervision and all the information presented hereon is true and correct to the best of my knowledge and information.

11/5/98 — Date — Patrick G. Corser, NM P.E. 12236

Not For Construction

REV No	REVISIONS	DATE	DESIGN BY	DRAWN BY	REVIEWED AND SIGNED BY
1	NOVEMBER 1998 REVISION	10/29/98	J.Pellicer	T.Smith	P.Corser
0	PART B PERMIT APPLICATION	12/12/97	PGC/JPP	E.Simonsen	P.Corser

TRIASSIC PARK
WASTE DISPOSAL FACILITY

DRAWING TITLE:
TYPICAL LANDFILL ACCESS RAMP DETAILS

TerraMatrix
MONTGOMERY WATSON
Mining Group

Sheet 1 Of 1 Sheets
SCALE: AS NOTED
DRAWING No. 14

AutoCAD FILE: RAMP.DWG PROJECT NUMBER: 602-0200

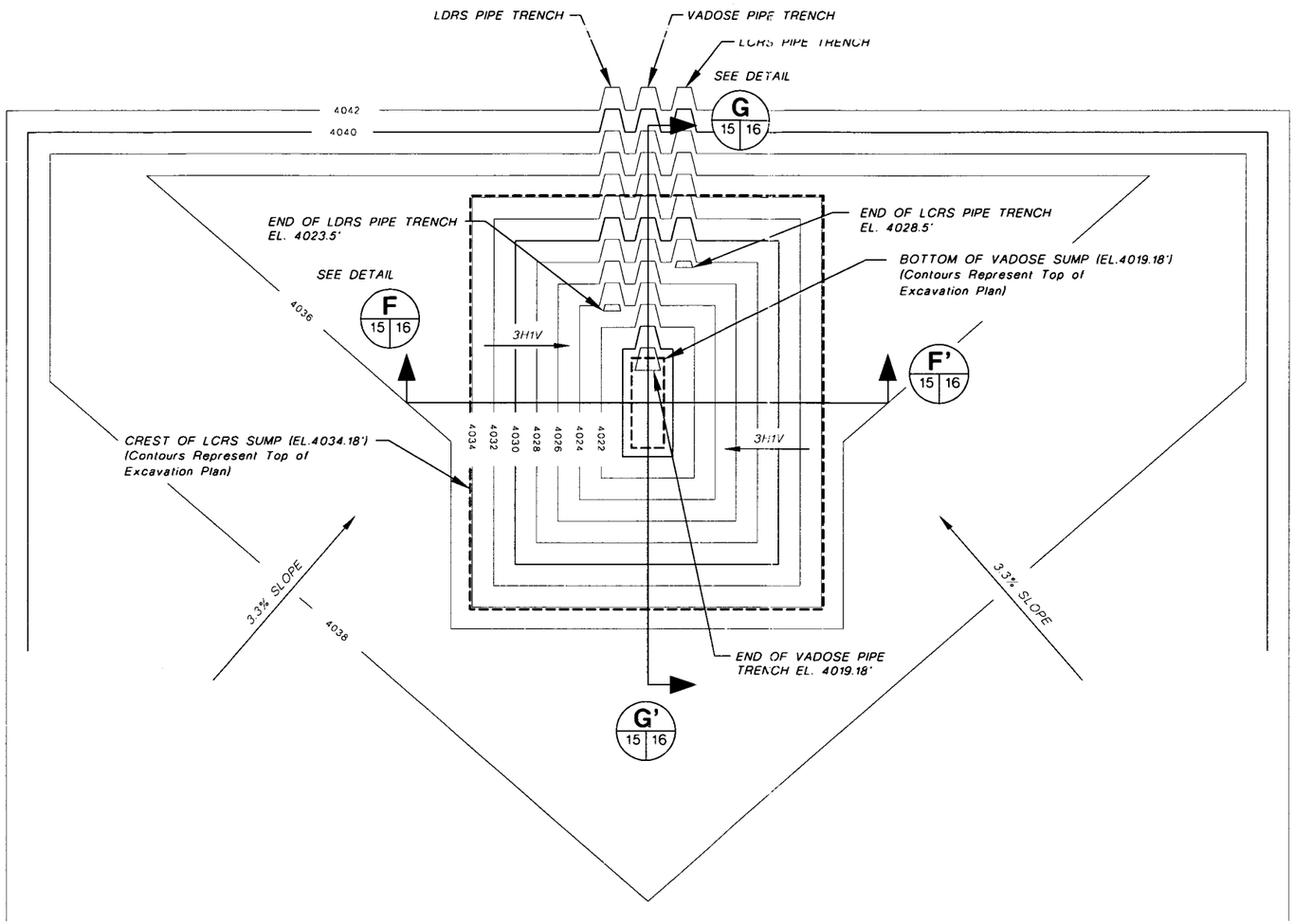

SUMP PHASE 1A - PLAN VIEW

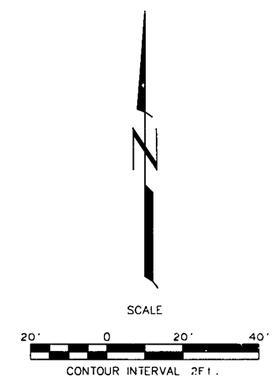

Not For Construction

REV. No.	REVISIONS	DATE	DESIGN BY	DRAWN BY	REVIEWED AND SIGNED BY
0	PART B PERMIT APPLICATION	12/12/97	PGC/JPP	T.Smith	P.Corser

PATRICK G. CORSER
NEW MEXICO
12236
REGISTERED PROFESSIONAL ENGINEER

PROFESSIONAL ENGINEER'S STATEMENT

I, Patrick G. Corser, state that this map was prepared under my supervision and all the information presented hereon is true and correct to the best of my knowledge and information.

11/5/98 — Patrick G. Corser
Date — Patrick G. Corser, NM P.E. 12236

TRIASSIC PARK
WASTE DISPOSAL FACILITY

DRAWING TITLE:

SUMP PLAN VIEW - PHASE 1A

TerraMatrix
MONTGOMERY WATSON
Mining Group

Sheet 1 Of 1 Sheets
SCALE: See Scale Bar
DRAWING No. 15

NOTE:
FOR GENERAL NOTES AND LEGEND INFORMATION SEE DRAWING No. 2, "INDEX, LEGEND AND GENERAL NOTES".

PROJECT NUMBER: 602-0200
AutoCAD FILE: SUMP2L

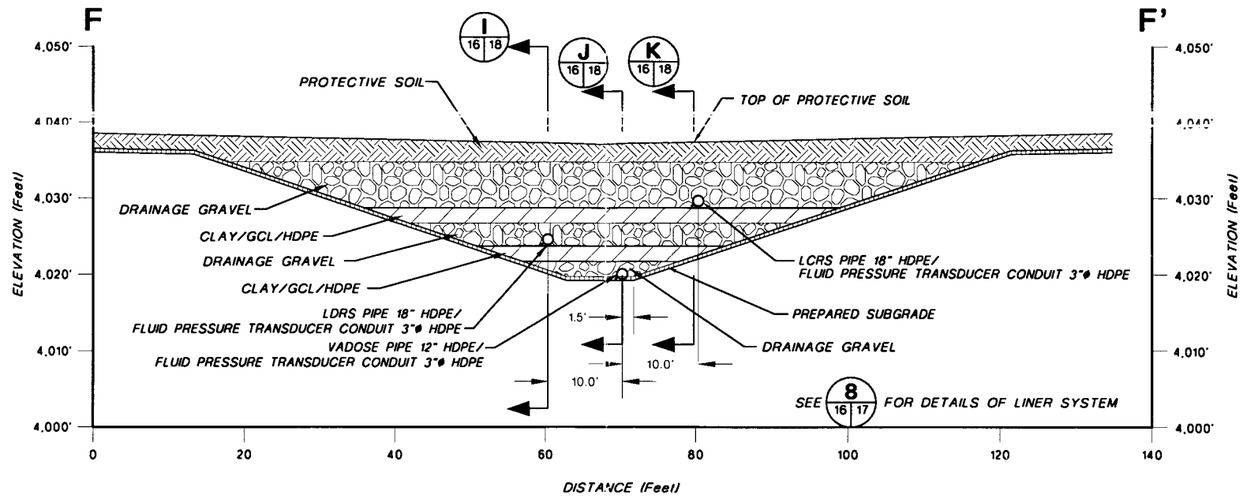

F 15 16 SUMP - CROSS-SECTION F-F'

HORIZONTAL SCALE
0 10.0' 20.0'

VERTICAL SCALE
0 10.0' 20.0'

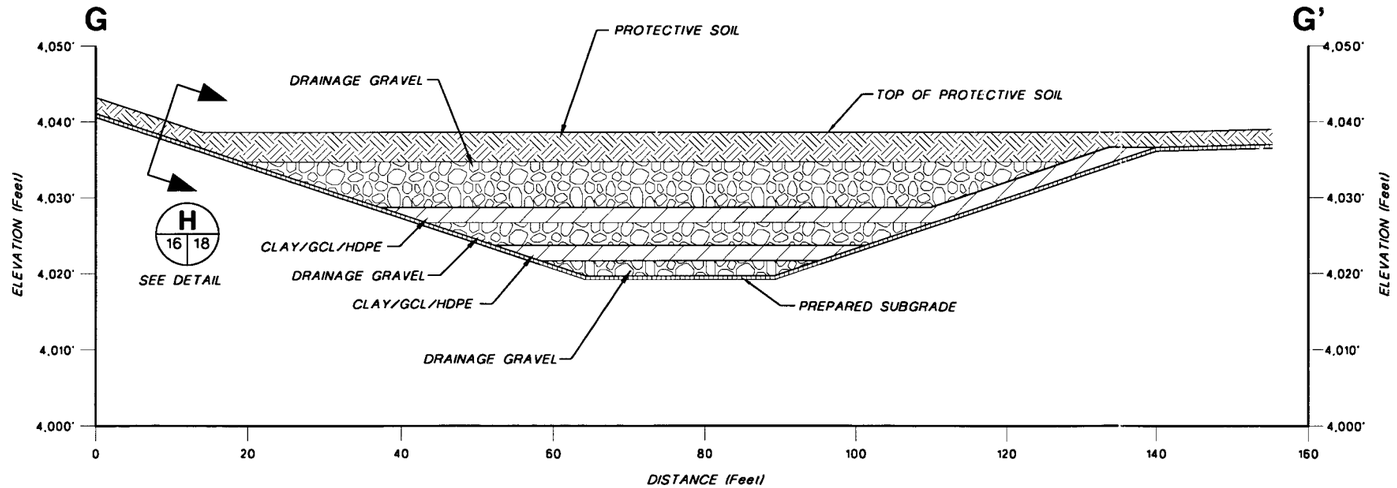

G 15 16 SUMP - CROSS-SECTION G-G'

HORIZONTAL SCALE
0 10.0' 20.0'

VERTICAL SCALE
0 10.0' 20.0'

NOTE:
FOR GENERAL NOTES AND LEGEND INFORMATION SEE DRAWING No. 2, "INDEX, LEGEND AND GENERAL NOTES".

PATRICK G. CORSER NEW MEXICO 12236 REGISTERED PROFESSIONAL ENGINEER

PROFESSIONAL ENGINEER'S STATEMENT

I, Patrick G. Corser, state that this map was prepared under my supervision and all the information presented hereon is true and correct to the best of my knowledge and information.

11/5/98 — Date

Patrick G. Corser, NM P.E. 12236

Not For Construction

REV. No.	REVISIONS	DATE	DESIGN BY	DRAWN BY	REVIEWED AND SIGNED BY
1	NOVEMBER 1998 REPORT	10/29/98	J.Pellicer	T.Smith	P.Corser
0	PART B PERMIT APPLICATION	12/12/97	PGC/JPP	E.Simonsen	P.Corser

TRIASSIC PARK
WASTE DISPOSAL FACILITY

DRAWING TITLE:
SUMP CROSS-SECTIONS - PHASE 1A

TerraMatrix
MONTGOMERY WATSON
Mining Group

Sheet 1 Of 1 Sheets
SCALE: See Scale Bar
DRAWING No. 16

AutoCAD FILE: SUMP2.DWG PROJECT NUMBER: 602-0200

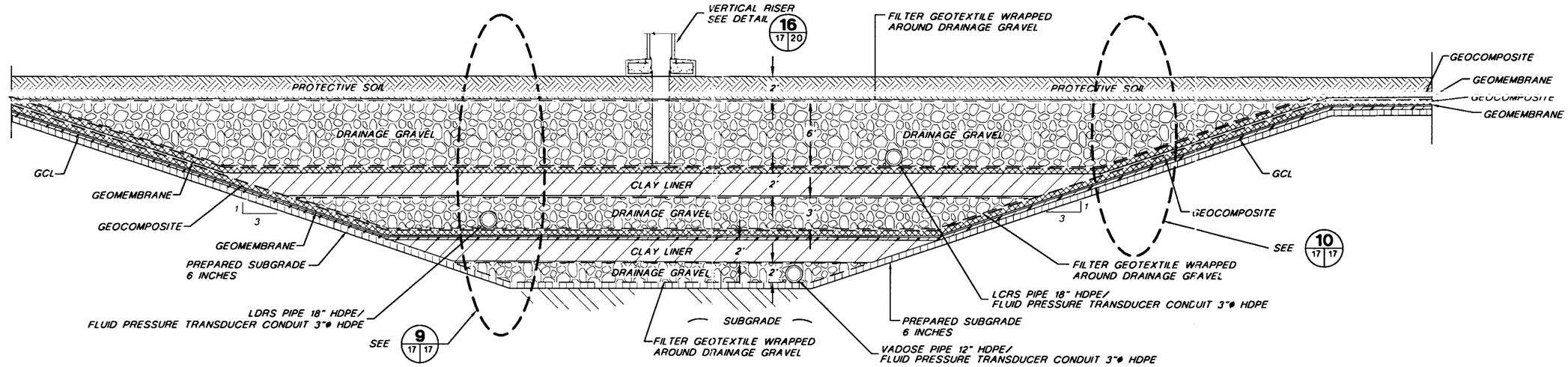

8 16 17 TYPICAL SUMP DETAIL

SCALE
0 5.0' 10.0'
Feet

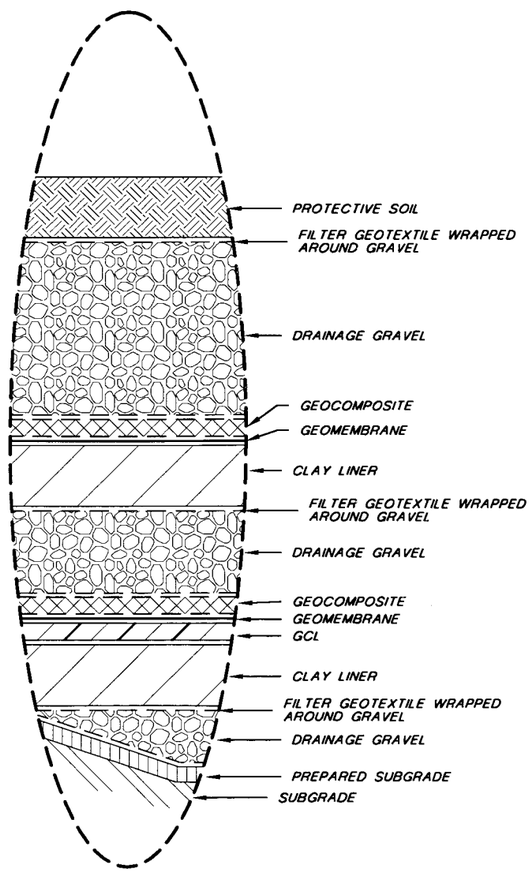

9 17 17 EXAGGERATED GEOSYNTHETIC COMPONENT DETAIL

Not To Scale

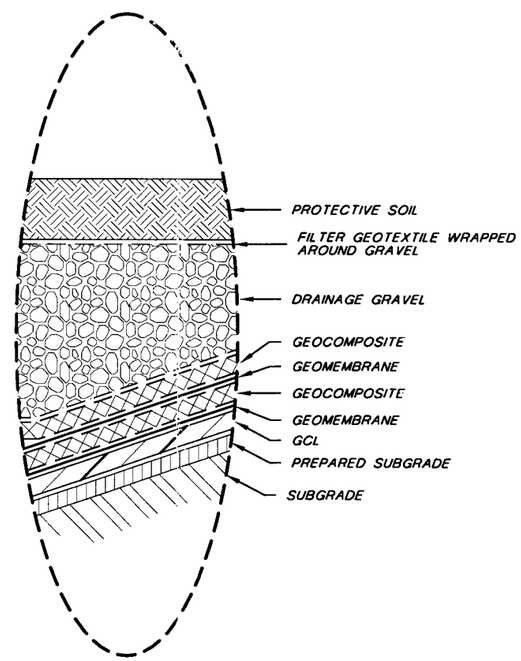

10 17 17 EXAGGERATED GEOSYNTHETIC COMPONENT DETAIL

Not To Scale

NOTE:
FOR GENERAL NOTES AND LEGEND INFORMATION SEE DRAWING No 2, "INDEX, LEGEND AND GENERAL NOTES".

Not For Construction

REV No	REVISIONS	DATE	DESIGN BY	DRAWN BY	REVISIED AND SIGNED BY
1	NOVEMBER 1998 REVISION	10/29/98	J.Pellicer	T.Smith	P.Corser
0	PART B PERMIT APPLICATION	12/12/97	PGC/JPP	E.Simonsen	P.Corser

PATRICK G. CORSER NEW MEXICO 12236 REGISTERED PROFESSIONAL ENGINEER

PROFESSIONAL ENGINEER'S STATEMENT
I, Patrick G. Corser, state that this map was prepared under my supervision and all the information presented hereon is true and correct to the best of my knowledge and information.
11/5/98 Patrick G. Corser
Date Patrick G. Corser, NM P.E. 12236

TRIASSIC PARK WASTE DISPOSAL FACILITY

DRAWING TITLE:
TYPICAL SUMP DETAIL CROSS-SECTION

TerraMatrix
MONTGOMERY WATSON
Mining Group

Sheet 1 Of 1 Sheets
SCALE: Not To Scale
DRAWING No. 17

AutoCAD FILE: TYP-SU ILDWG PROJECT NUMBER: 602-0200

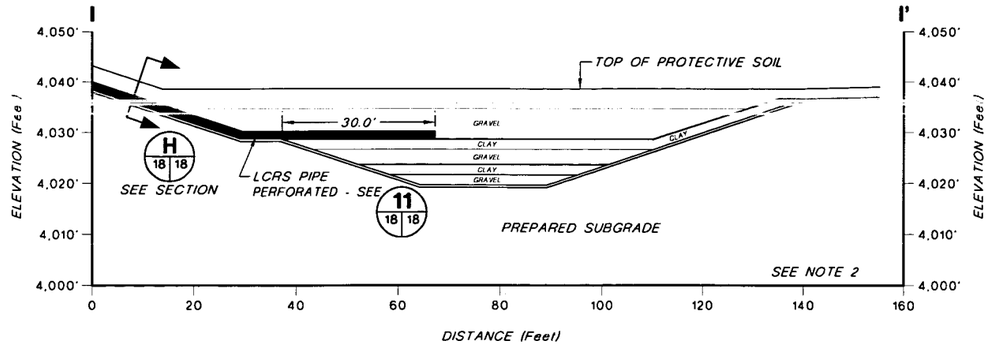

I 16|18 LCRS PIPE PLACEMENT IN SUMP

HORIZONTAL SCALE
0 15' 30'

VERTICAL SCALE
0 15' 30'

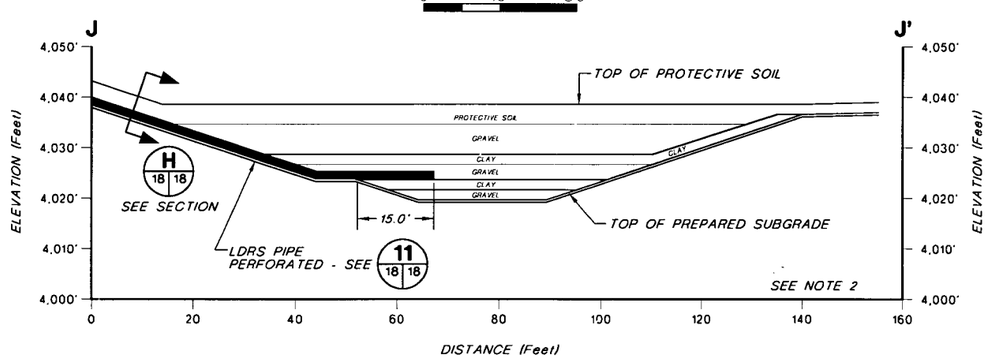

J 16|18 LDRS PIPE PLACEMENT IN SUMP

HORIZONTAL SCALE
0 15' 30'

VERTICAL SCALE
0 15' 30'

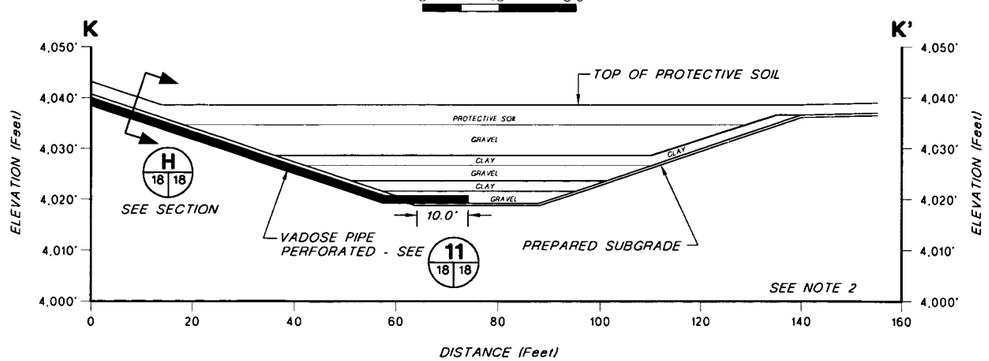

K 16|18 VADOSE PIPE PLACEMENT IN SUMP

HORIZONTAL SCALE
0 15' 30'

VERTICAL SCALE
0 15' 30'

NOTE:
1. FOR GENERAL NOTES AND LEGEND INFORMATION SEE DRAWING No. 2, "INDEX, LEGEND AND GENERAL NOTES".
2. SEE 8 18|17 FOR LINER DETAILS IN SUMP.

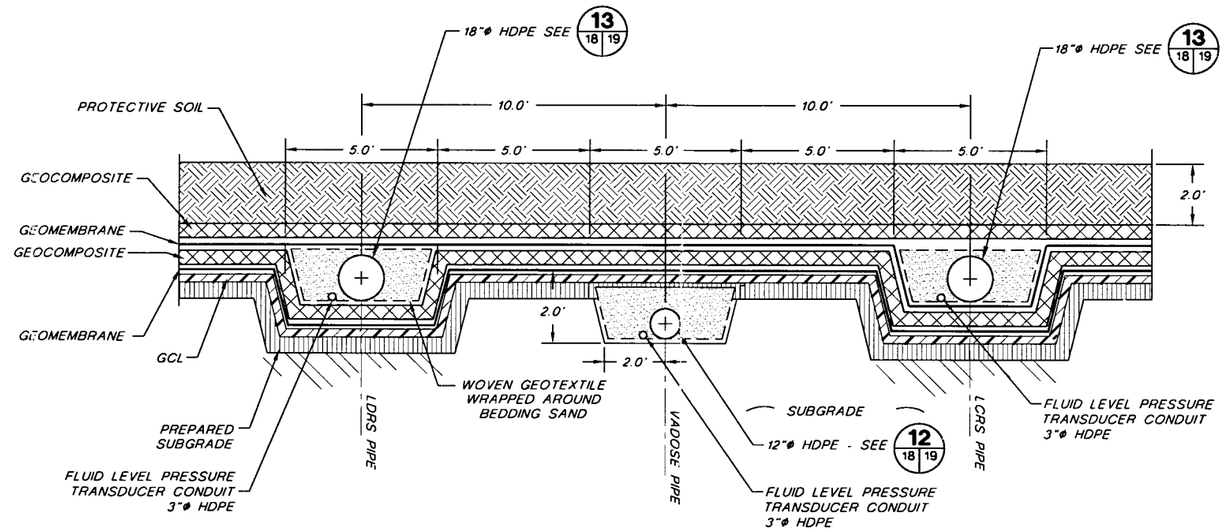

H 16|18 H 18|18 LDRS, VADOSE AND LCRS PIPES SLOPE SECTION

Not To Scale

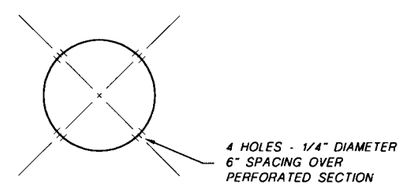

11 18|18 PIPE PERFORATION DETAIL

Not To Scale

PROFESSIONAL ENGINEER'S STATEMENT

I, Patrick G. Corser, state that this map was prepared under my supervision and all the information presented hereon is true and correct to the best of my knowledge and information.

11/5/98 Patrick G. Corser
Date Patrick G. Corser, NM P.E. 12236

PATRICK G. CORSER NEW MEXICO 12236 REGISTERED PROFESSIONAL ENGINEER

Not For Construction

REV No.	REVISIONS	DATE	DESIGN BY	DRAWN BY	REVIEWED AND SIGNED BY
1	NOVEMBER 1998 REVISION	10.29.98	J.Pelicer	T.Smith	P.Corser
0	PART B PERMIT APPLICATION	12/12/97	PGC/JPP	K.Conrath	P.Corser

TRIASSIC PARK
WASTE DISPOSAL FACILITY

DRAWING TITLE:
VADOSE, LDRS, LCRS CROSS-SECTIONS AND DETAILS

TerraMatrix
MONTGOMERY WATSON
Mining Group

Sheet 1 Of 1 Sheets
SCALE: See Scale Bar
DRAWING No. 18

PROJECT NUMBER: 602-0200
AutoCAD FILE: PS-DET

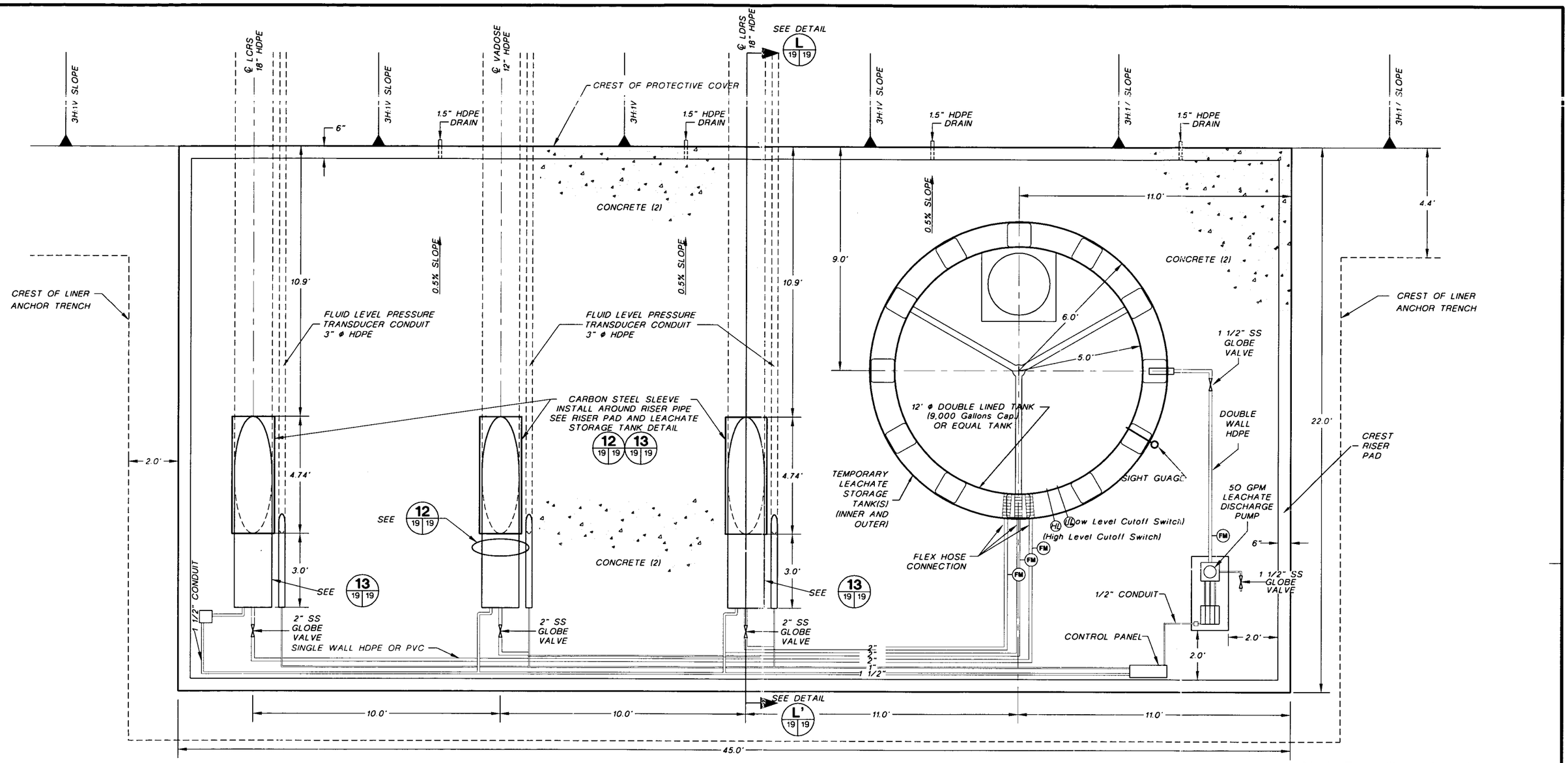

CREST RISER PAD AND LEACHATE STORAGE TANK - PLAN VIEW

SCALE
0 2.0' 4.0'
Feet

Not For Construction

REV No	REVISIONS	DATE	DESIGN BY	DRAWN BY	REVIEWED AND SIGNED BY
1	NOVEMBER 1998 REVISION	10/29/98	J.Pellicer	T.Smith	P.Corser
0	PART B PERMIT APPLICATION	12/12/97	PGC/JPP	M.Mathisen	P.Corser

PATRICK G. CORSER NEW MEXICO 12236 REGISTERED PROFESSIONAL ENGINEER

PROFESSIONAL ENGINEER'S STATEMENT

I, Patrick G. Corser, state that this map was prepared under my supervision and all the information presented herein is true and correct to the best of my knowledge and information.

11/5/98 — Date

Patrick G. Corser, NM P.E. 12236

TRIASSIC PARK
WASTE DISPOSAL FACILITY

DRAWING TITLE:
CREST RISER PAD AND LEACHATE STORAGE TANK PLAN VIEW AND CROSS-SECTIONS

TerraMatrix
MONTGOMERY WATSON
Mining Group

Sheet 1 Of 2 Sheets
SCALE: See Scale Bar
DRAWING No. 19

NOTE:
1) FOR GENERAL NOTES AND LEGEND INFORMATION SEE DRAWING No. 2, "INDEX, LEGEND AND GENERAL NOTES".
2) FOR CONCRETE DETAILS SEE DRAWING 45.

AutoCAD FILE: CRPLS1 DWG PROJECT NUMBER: 622-0200

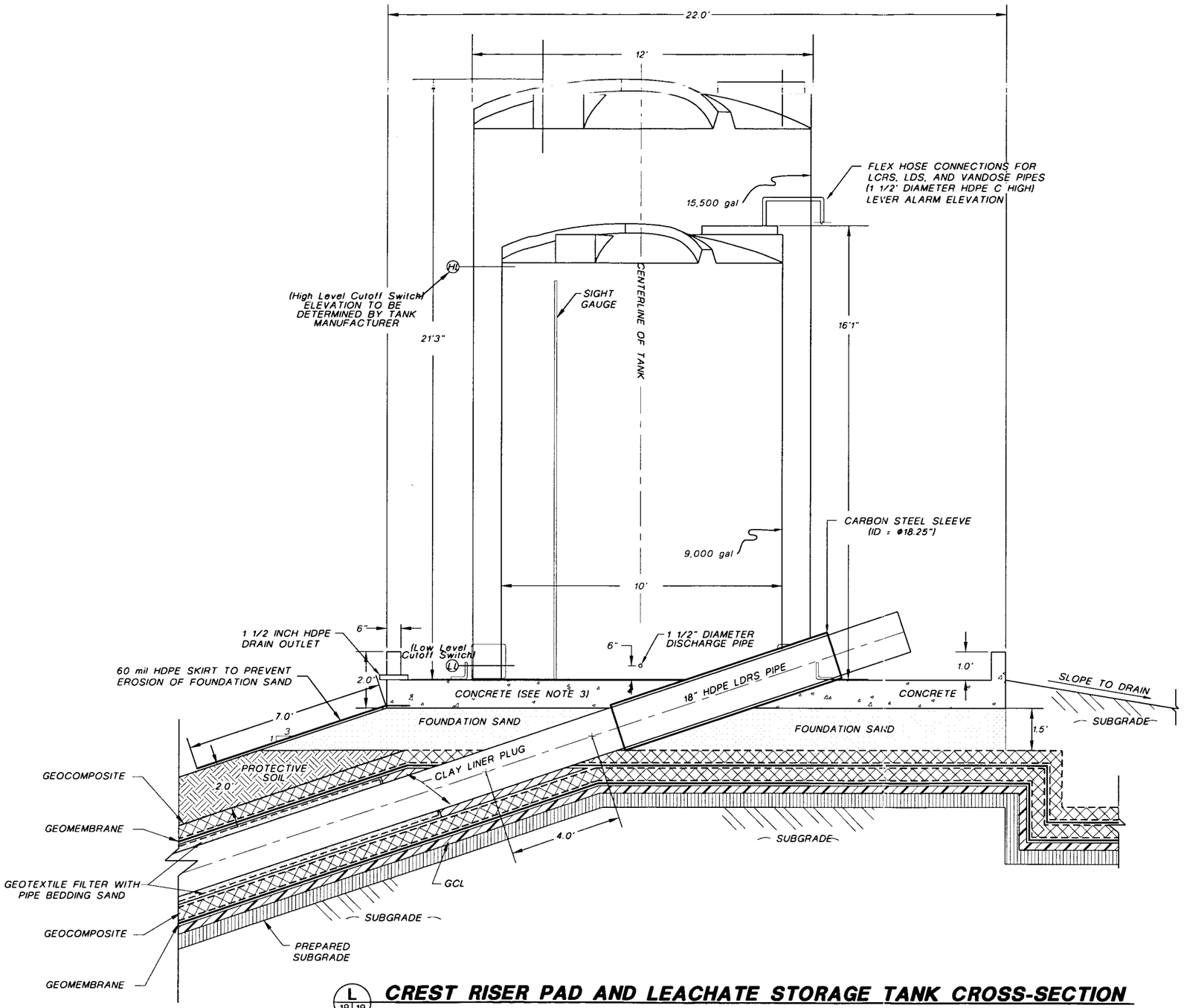

L 19|19 CREST RISER PAD AND LEACHATE STORAGE TANK CROSS-SECTION

SCALE
0 2.0' 4.0'
Feet

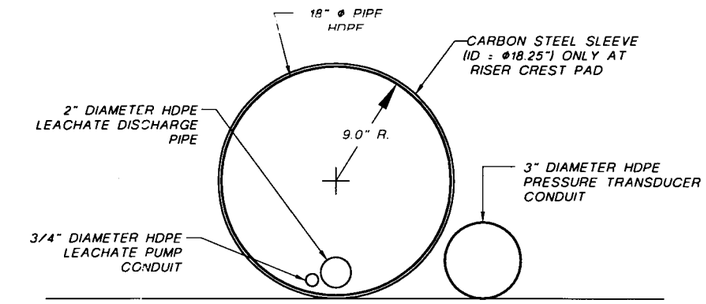

13 18|19 LCRS AND LDRS RISER PIPE DETAIL

SCALE
0 0.5' 1.0'
Feet

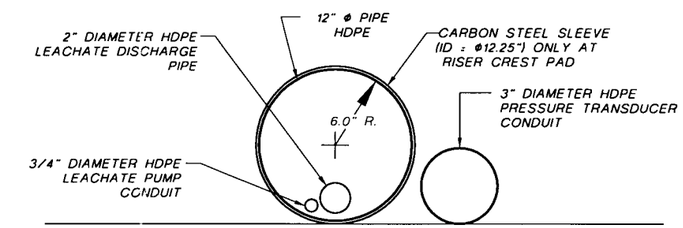

12 18|19 VADOSE RISER PIPE DETAIL

SCALE
0 0.5' 1.0'
Feet

NOTE:

1) FOR GENERAL NOTES AND LEGEND INFORMATION SEE DRAWING No. 2, "INDEX, LEGEND AND GENERAL NOTES".

2) PIPE CONNECTION AND TANK ACCESSORIES TO BE SPECIFIED BY TANK SUPPLIER.

3) FOR CONCRETE DETAILS SEE DRAWING 45.

PATRICK G. CORSER NEW MEXICO 12236 REGISTERED PROFESSIONAL ENGINEER

PROFESSIONAL ENGINEER'S STATEMENT

I, Patrick G. Corser, state that this map was prepared under my supervision and all the information presented hereon is true and correct to the best of my knowledge and information.

11/5/98 Date — Patrick G. Corser, NM P.E. 12236

Not For Construction

REV. No.	REVISIONS	DATE	DESIGN BY	DRAWN BY	REVIEWED AND SIGNED BY
1	NOVEMBER 1998 REVISION	10/29/98	J.Pellicer	T.Smith	P.Corser
0	PART B PERMIT APPLICATION	12/12/97	PGC/JPP	M.Mathisen	P.Corser

TRIASSIC PARK
WASTE DISPOSAL FACILITY

DRAWING TITLE:
CREST RISER PAD AND LEACHATE STORAGE TANK PLAN VIEW AND CROSS-SECTIONS

TerraMatrix
MONTGOMERY WATSON
Mining Group

Sheet 2 Of 2 Sheets
SCALE: See Scale Bar
DRAWING No. 19

AutoCAD FILE: CRPLST WG PROJECT NUMBER: 602-0200

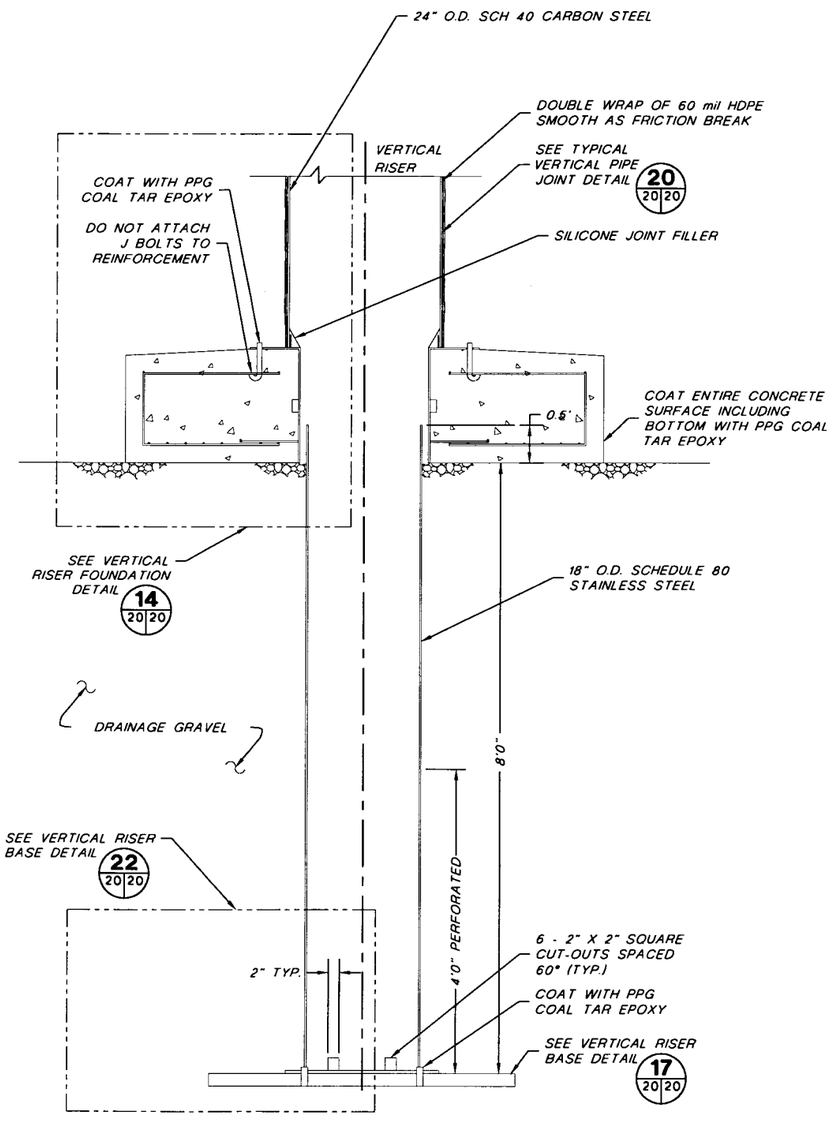

16 17|20 VERTICAL RISER SECTION

SCALE
0 1' 2'
Feet

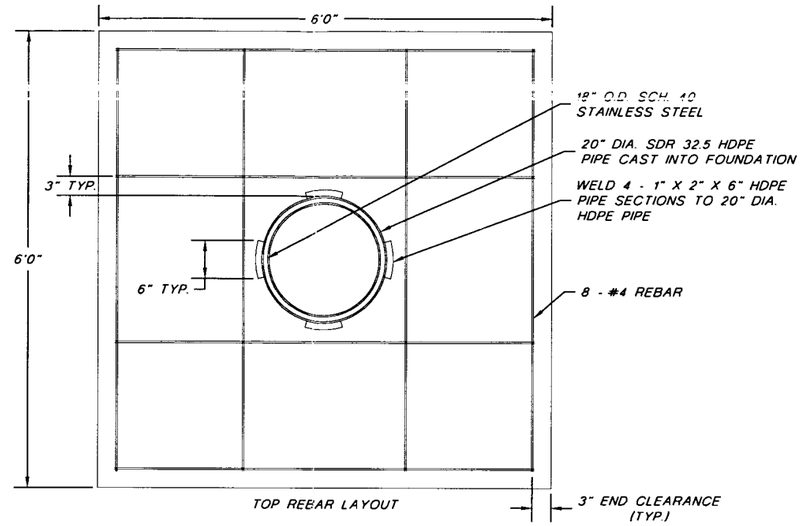

TOP REBAR LAYOUT

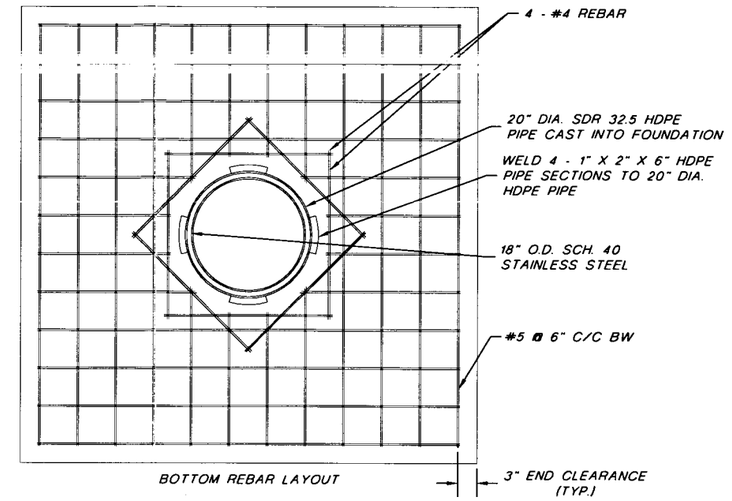

BOTTOM REBAR LAYOUT

21 20|20 VERTICAL RISER BASE DETAIL

SCALE
0 1' 2'
Feet

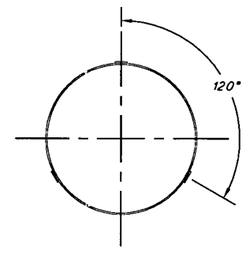

PLAN

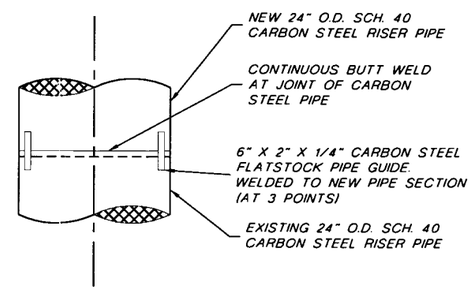

SECTION

20 20|20 TYPICAL VERTICAL RISER PIPE JOINT

SCALE
0 1' 2'
Feet

NOTE:
FOR GENERAL NOTES AND LEGEND INFORMATION SEE DRAWING No. 2, "INDEX, LEGEND AND GENERAL NOTES".

PROFESSIONAL ENGINEER'S STATEMENT

I, Patrick G. Corser, state that this map was prepared under my supervision and all the information presented hereon is true and correct to the best of my knowledge and information.

11/5/98 Date — Patrick G. Corser, NM P.E. 12236

PATRICK G. CORSER NEW MEXICO 12236 REGISTERED PROFESSIONAL ENGINEER

Not For Construction

REV No	REVISIONS	DATE	DESIGN BY	DRAWN BY	REVIEWED AND SIGNED BY
1	NOVEMBER 1998 REVISION	10/29/98	J.Pellicer	T.Smith	P.Corser
0	PART B PERMIT APPLICATION	12/12/97	PGC/JPP	E.Simonsen	P.Corser

TRIASSIC PARK WASTE DISPOSAL FACILITY

DRAWING TITLE:
VERTICAL RISER DETAILS

TerraMatrix MONTGOMERY WATSON Mining Group

Sheet 1 Of 2 Sheets
SCALE: As Noted
DRAWING No. 20

PROJECT NUMBER: 602-0200
AutoCAD FILE: GLF-SP

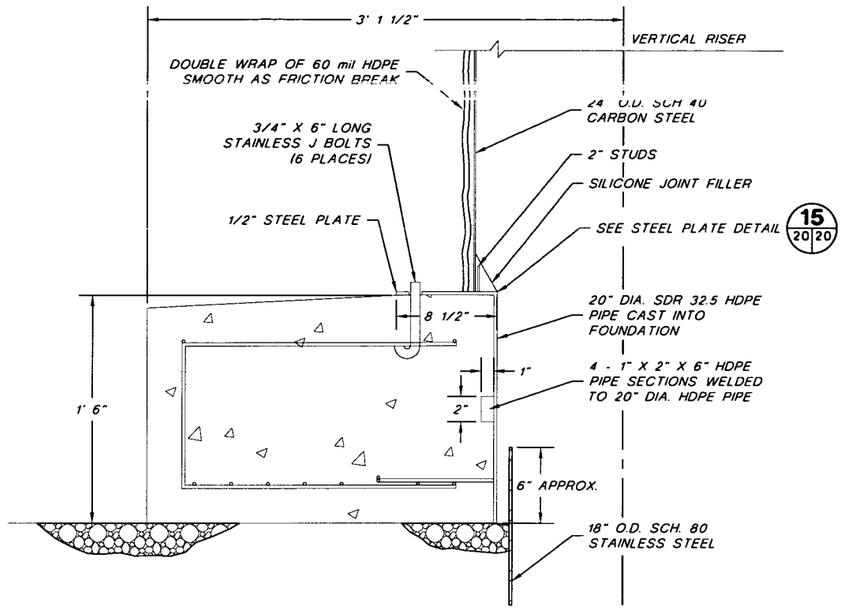

14/20|20 VERTICAL RISER FOUNDATION DETAIL

SCALE 0 0.5' 1' Feet

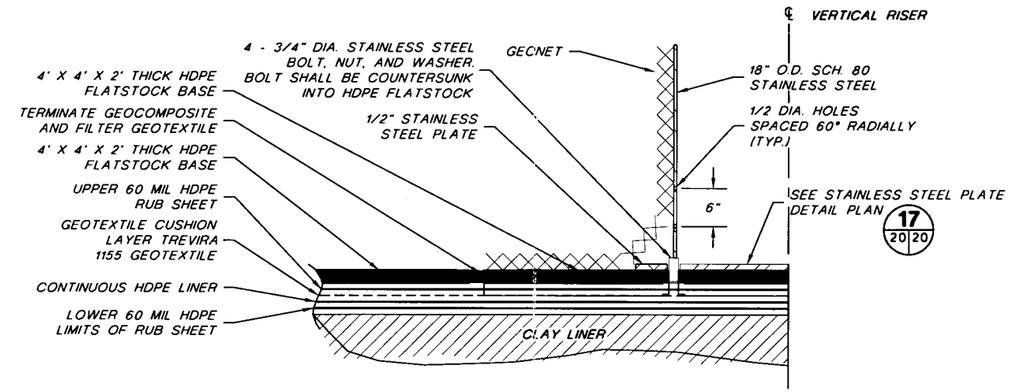

22/20|20 VERTICAL RISER BASE DETAIL

SCALE 0 0.5' 1' Feet

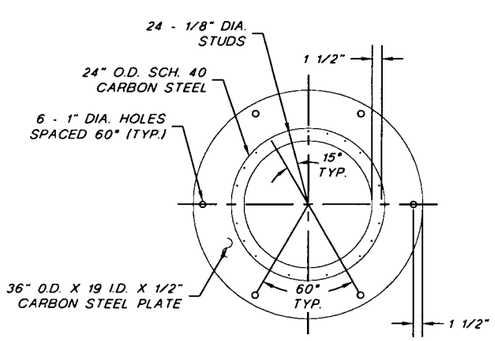

15/20|20 STEEL PLATE DETAIL

SCALE 0 1' 2' Feet

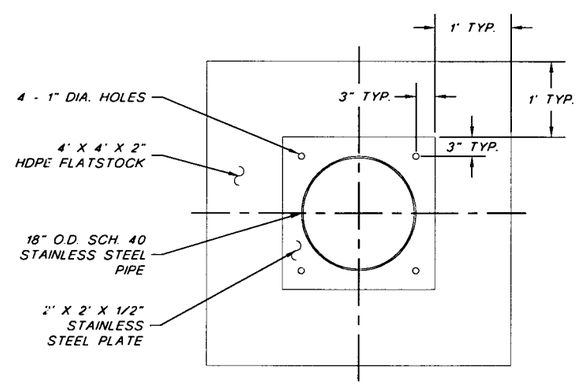

17/20|20 STAINLESS STEEL PLATE DETAIL

SCALE 0 1' 2' Feet

NOTE:
FOR GENERAL NOTES AND LEGEND INFORMATION SEE DRAWING No. 2, "INDEX, LEGEND AND GENERAL NOTES".

PATRICK G. CORSER NEW MEXICO 12236 REGISTERED PROFESSIONAL ENGINEER

PROFESSIONAL ENGINEER'S STATEMENT

I, Patrick G. Corser, state that this map was prepared under my supervision and all the information presented hereon is true and correct to the best of my knowledge and information.

11/5/98 PATRICK CORSER
Date Patrick G. Corser, NM P.E. 12236

Not For Construction

REV No	REVISIONS	DATE	DESIGN BY	DRAWN BY	REVIEWED AND SIGNED BY	
1	NOVEMBER 1998 REVISION	10/29/98	J.Pellicer	T.Smith	P.Corser	
0	PART B PERMIT APPLICATION	12/12/97	PGC/JJP	E.Simonsen	P.Corser	

TRIASSIC PARK
WASTE DISPOSAL FACILITY

DRAWING TITLE:
VERTICAL RISER DETAILS

TerraMatrix
MONTGOMERY WATSON
Mining Group

Sheet 2 Of 2 Sheets
SCALE: As Noted
DRAWING No. 20

AutoCAD FILE: GLF-SR.G PROJECT NUMBER: 602-0200

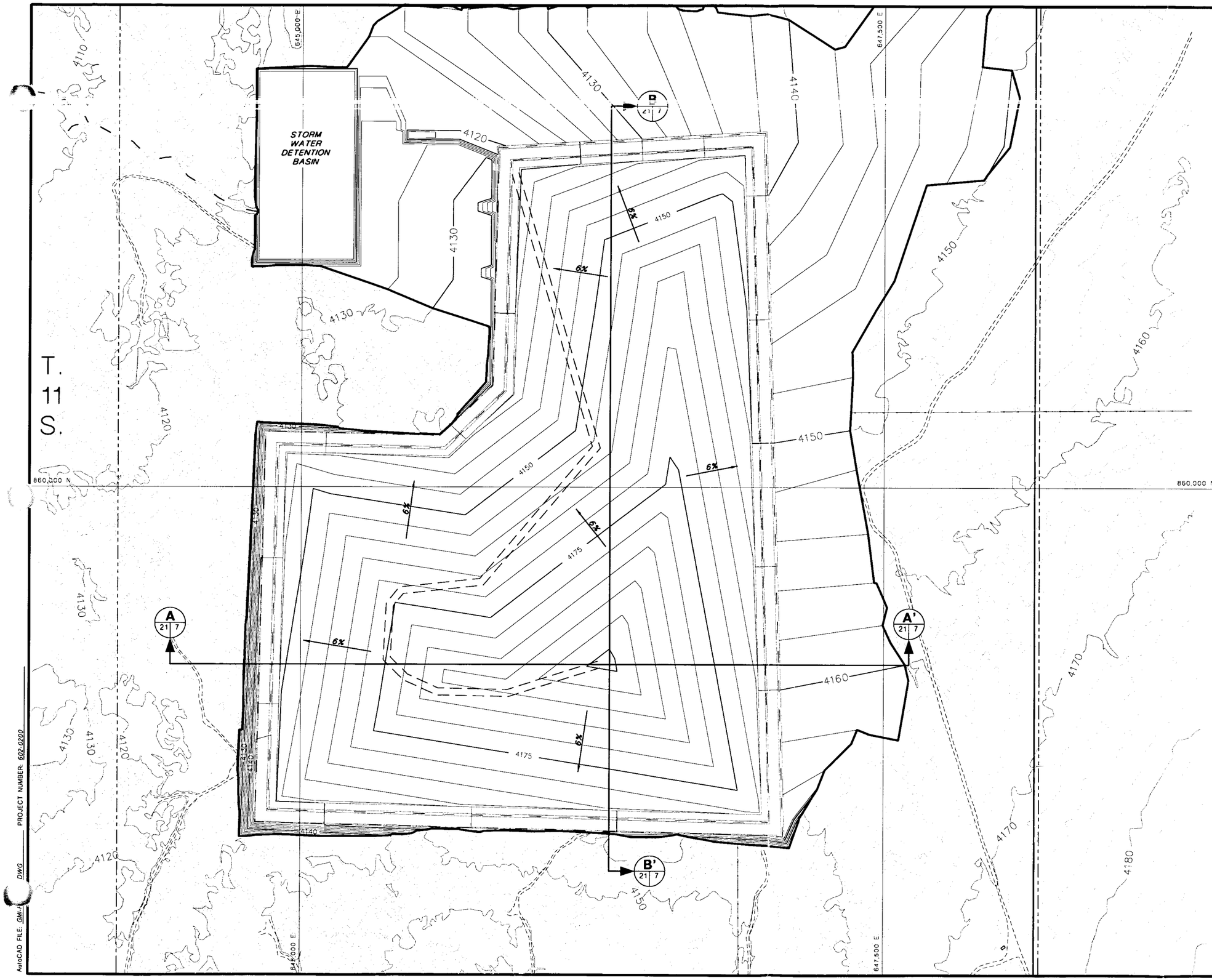

NOTES:

1. FOR GENERAL NOTES AND LEGEND INFORMATION SEE DRAWING No. 2, "INDEX, LEGEND AND GENERAL NOTES".
2. TOPOGRAPHY FROM AERIAL SURVEYS PERFORMED AUGUST 1997 BY KOOGLE AND POULS ENGINEERING.

PATRICK G. CORSER NEW MEXICO 12236 REGISTERED PROFESSIONAL ENGINEER

PROFESSIONAL ENGINEER'S STATEMENT

I, Patrick G. Corser, state that this map was prepared under my supervision and all the information presented hereon is true and correct to the best of my knowledge and information.

11/5/98 PATRICK CORSER

Date *Patrick G. Corser, NM P.E. 12236*

SCALE

200' 0 200' 400'

CONTOUR INTERVAL 5 FT.
SURFACE TOPOGRAPHY CONTOUR INTERVAL 2 FT.

Not For Construction

REV No.	REVISIONS	DATE	DESIGN BY	DRAWN BY	REVIEWED AND SIGNED BY
1	NOVEMBER 1998 REVISION	10/29/98	J.Pellicer	T.Smith	P.Corser
0	PART B PERMIT APPLICATION	12/12/97	PGC/JPP	T.Smith	P.Corser

TRIASSIC PARK
WASTE DISPOSAL FACILITY

DRAWING TITLE:

FINAL GRADING PLAN - TOP OF WASTE CONTOURS

TerraMatrix
MONTGOMERY WATSON
Mining Group

Sheet 1 Of 1 Sheets

SCALE: AS NOTED

DRAWING No. 21

AutoCAD FILE: GM-1 DWG PROJECT NUMBER: 602-0200

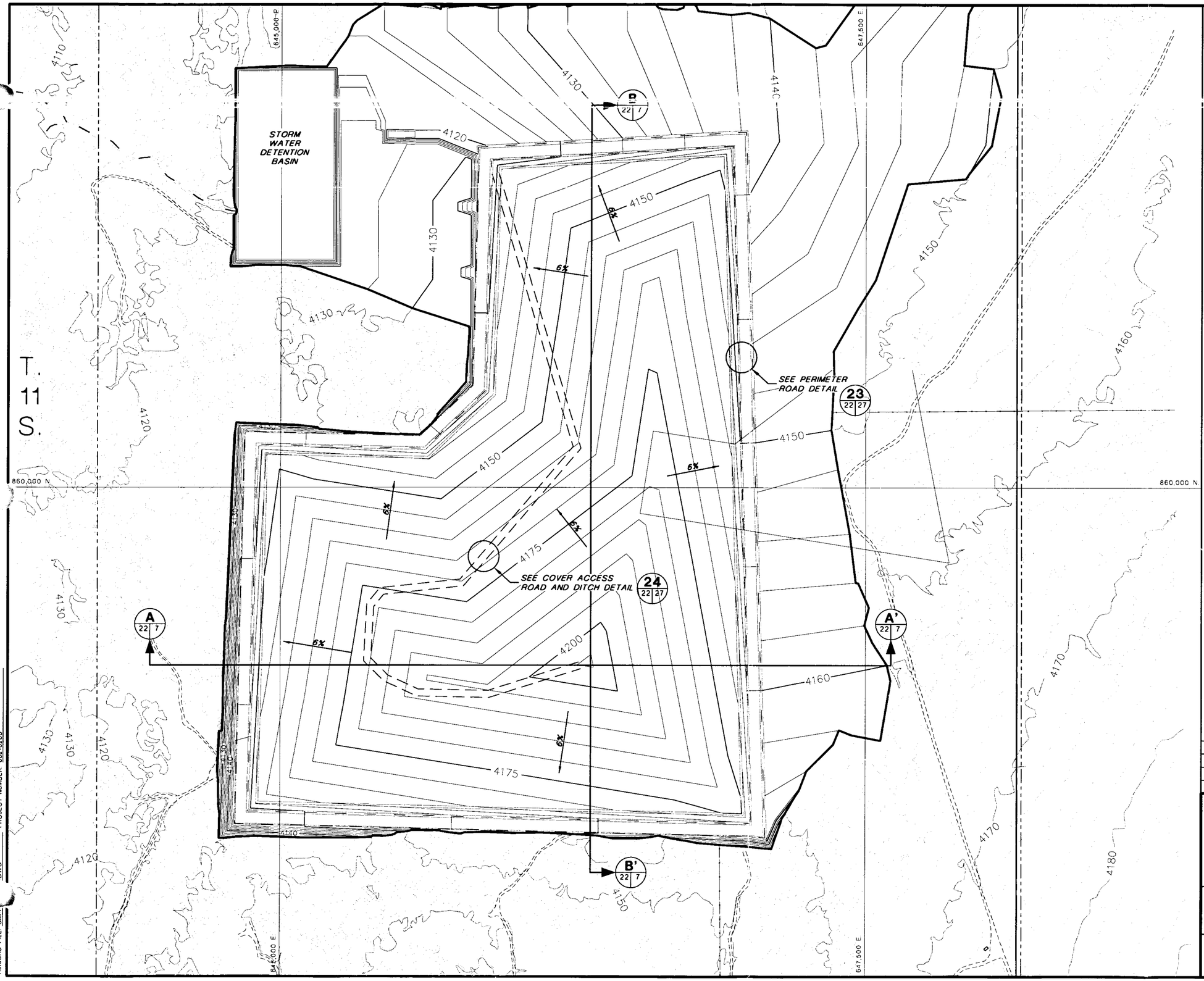

NOTES:
1. FOR GENERAL NOTES AND LEGEND INFORMATION SEE DRAWING No. 2, "INDEX, LEGEND AND GENERAL NOTES".
2. TOPOGRAPHY FROM AERIAL SURVEYS PERFORMED AUGUST 1997 BY KOOGLE AND POULS ENGINEERING.

PATRICK G. CORSER
NEW MEXICO
12236
REGISTERED PROFESSIONAL ENGINEER

PROFESSIONAL ENGINEER'S STATEMENT

I, Patrick G. Corser, state that this map was prepared under my supervision and all the information presented hereon is true and correct to the best of my knowledge and information.

11/5/98 — Patrick G. Corser
Date — Patrick G. Corser, NM P.E. 12236

SCALE
200' 0 200' 400'
CONTOUR INTERVAL 5 FT.
SURFACE TOPOGRAPHY CONTOUR INTERVAL 2 FT.

Not For Construction

REV No	REVISIONS	DATE	DESIGN BY	DRAWN BY	REVIEWED AND SIGNED BY
1	NOVEMBER 1998 REVISION	10/29/98	J.Pellicer	T.Smith	P.Corser
0	PART B PERMIT APPLICATION	12/12/97	PGC/JPP	T.Smith	P.Corser

TRIASSIC PARK
WASTE DISPOSAL FACILITY

DRAWING TITLE:
FINAL GRADING PLAN - TOP OF VEGETATIVE COVER CONTOURS

TerraMatrix
MONTGOMERY WATSON
Mining Group

Sheet 1 Of 1 Sheets
SCALE: AS NOTED
DRAWING No. 22

AutoCAD FILE: GM-F DWG PROJECT NUMBER 602-0200

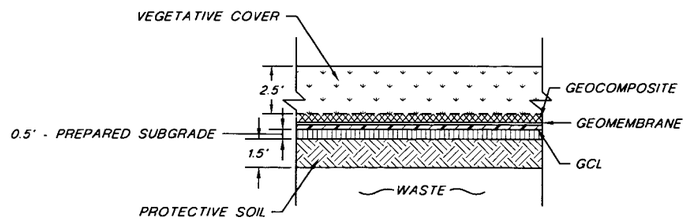

18 / 23 23 COVER DETAIL

NOT TO SCALE

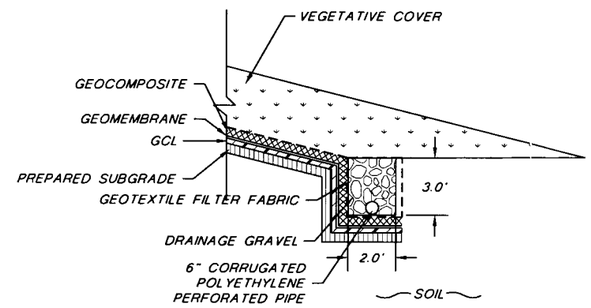

19 / 23 23 COVER ANCHOR TRENCH DETAIL

NOT TO SCALE

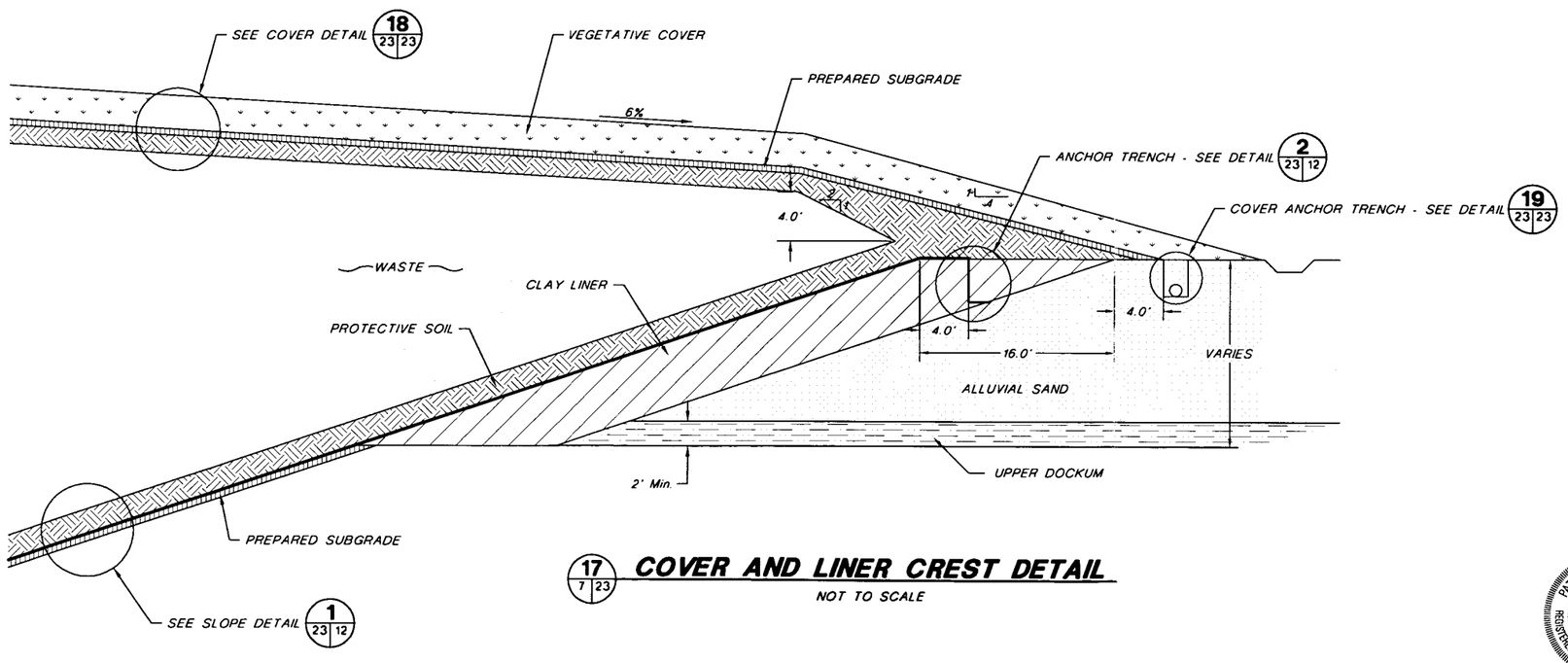

17 / 7 23 COVER AND LINER CREST DETAIL

NOT TO SCALE

NOTE:
FOR GENERAL NOTES AND LEGEND INFORMATION SEE DRAWING No. 2. "INDEX, LEGEND AND GENERAL NOTES".

PATRICK G. CORSER NEW MEXICO 12236 REGISTERED PROFESSIONAL ENGINEER

PROFESSIONAL ENGINEER'S STATEMENT

I, Patrick G. Corser, state that this map was prepared under my supervision and all the information presented hereon is true and correct to the best of my knowleage and information.

11/5/98 — Patrick G. Corser
Date — Patrick G. Corser, NM P.E. 12236

Not For Construction

REV No.	REVISIONS	DATE	DESIGN BY	DRAWN BY	REVIEWED AND SIGNED BY
1	NOVEMBER 1998 REVISION	10/29/98	J.Pelicer	T.Smith	P.Corser
0	PART B PERMIT APPLICATION	12/12/97	PGC/JPP	T.Smith	P.Corser

TRIASSIC PARK
WASTE DISPOSAL FACILITY

DRAWING TITLE:

FINAL COVER DETAILS

TerraMatrix
MONTGOMERY WATSON
Mining Group

Sheet 1 Of 1 Sheets
SCALE: AS NOTED
DRAWING No. 23

AutoCAD FILE: GANDY DETAIL PROJECT NUMBER: 602-0200

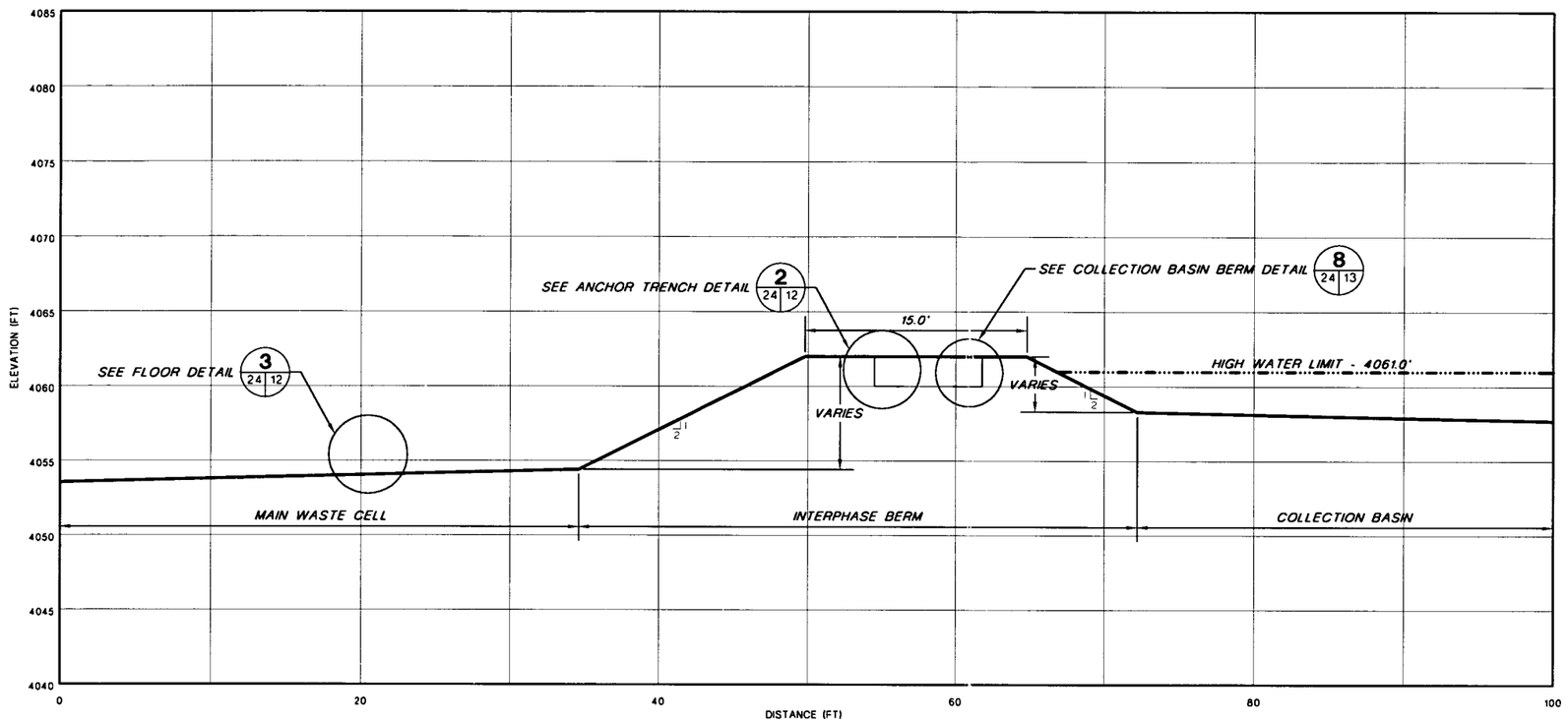

M 13 24 INTERPHASE BERM CROSS-SECTION M

HORIZONTAL SCALE
0 5 10

VERTICAL SCALE
0 5 10

Not For Construction

REV. No	REVISIONS	DATE	DESIGN BY	DRAWN BY	REVIEWED AND SIGNED BY
1	NOVEMBER 1998 REVISION	10/29/98	J.Pelicer	T.Smith	P.Corser
0	PART B PERMIT APPLICATION	12/12/97	PGC/JPP	T.Smith	P.Corser

PATRICK G. CORSER NEW MEXICO 12236 REGISTERED PROFESSIONAL ENGINEER

PROFESSIONAL ENGINEER'S STATEMENT

I, Patrick G. Corser, state that this map was prepared under my supervision and all the information presented hereon is true and correct to the best of my knowledge and information.

11/5/98 — Patrick G. Corser
Date — Patrick G. Corser, NM P.E. 12236

TRIASSIC PARK
WASTE DISPOSAL FACILITY

DRAWING TITLE:

INTERPHASE BERM SECTION

TerraMatrix
MONTGOMERY WATSON
Mining Group

Sheet 1 Of 1 Sheets
SCALE: As Shown
DRAWING No 24

NOTE:
FOR GENERAL NOTES AND LEGEND INFORMATION SEE DRAWING No. 2, "INDEX, LEGEND AND GENERAL NOTES".

PROJECT NUMBER 602.0200
AutoCAD FILE: GANDY

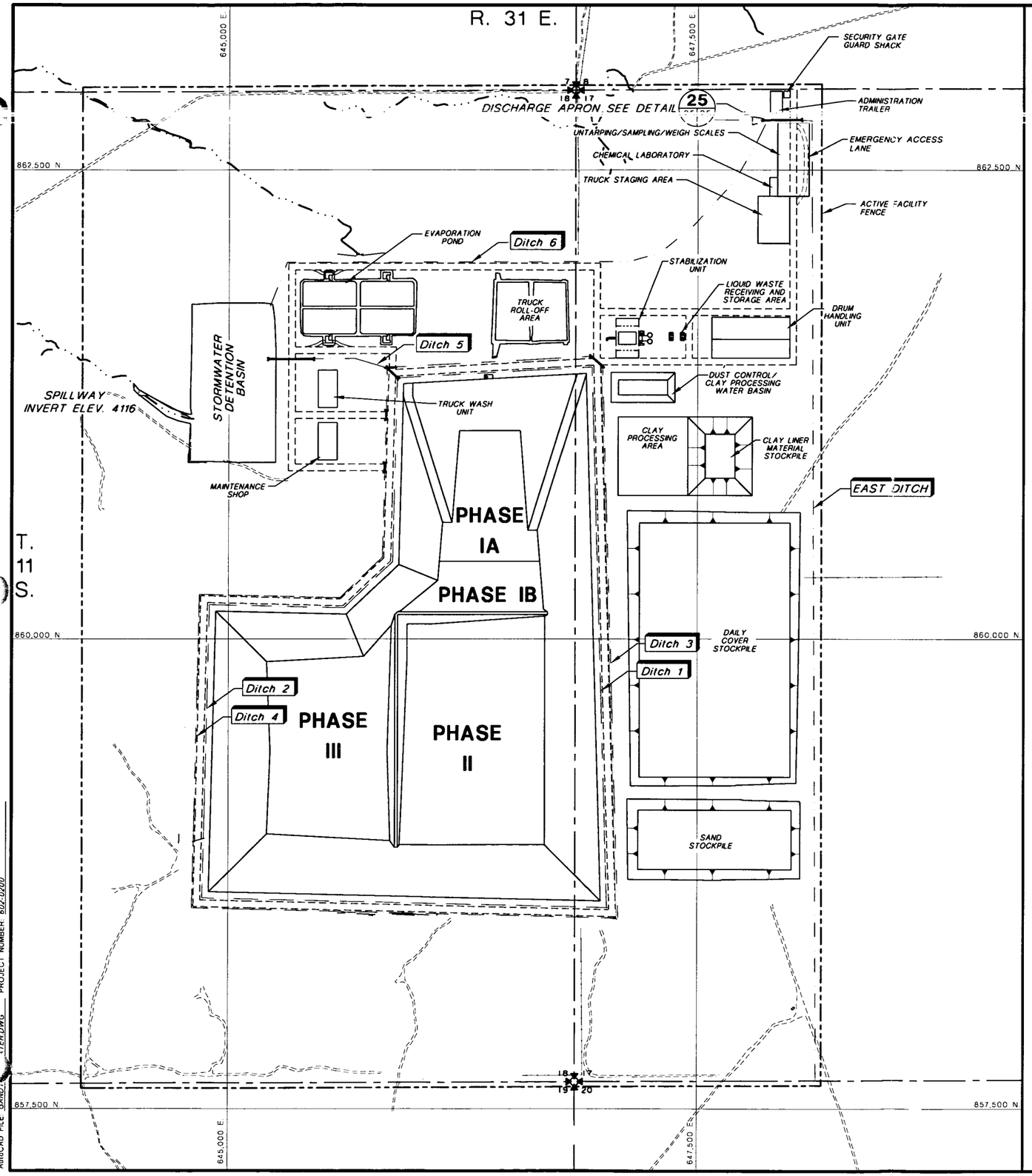

NOTES:
1. FOR GENERAL NOTES AND LEGEND INFORMATION SEE DRAWING No. 2, "INDEX, LEGEND AND GENERAL NOTES".
2. DITCHES 7 & 8 ARE SHOWN ON DRAWING 13.

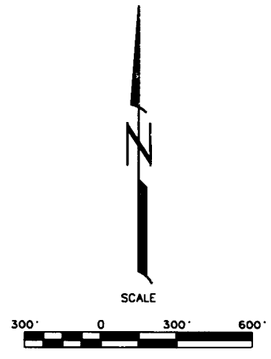

Not For Construction

REV No	REVISIONS	DATE	DESIGN BY	DRAWN BY	REVIEWED AND SIGNED BY
1	NOVEMBER 1998 REVISION	10/29/98	J.Pelicer	T.Smith	P.Corser
0	PART B PERMIT APPLICATION	12/12/97	PGC/JPP	T.Smith	P.Corser

PATRICK G. CORSER NEW MEXICO 12236 REGISTERED PROFESSIONAL ENGINEER

PROFESSIONAL ENGINEER'S STATEMENT

I, Patrick G. Corser, state that this map was prepared under my supervision and all the information presented hereon is true and correct to the best of my knowledge and information.

11/5/98 — Patrick G. Corser, NM P.E. 12236
Date

TRIASSIC PARK
WASTE DISPOSAL FACILITY

DRAWING TITLE:
SURFACE WATER CONTROL FEATURES

TerraMatrix
MONTGOMERY WATSON
Mining Group

Sheet 1 Of 2 Sheets
SCALE: AS NOTED
DRAWING No. 25

AutoCAD FILE: GAND...TER.DWG PROJECT NUMBER: 602.0200

CHANNEL DESIGNS

Ditch	25-yr,24-hr Flow Q (cfs)	Slope (%)	Bottom Width (BW) (ft)	Sideslope H:1V	Depth of Flow (D) (ft) 1	Velocity (fps) 2	Freeboard (ft)	Maximum Total Depth (ft)	Erosion Protection	2-yr,24-hr Flow Q (cfs)	Velocity (fps)
1	34.2	0.5-2.0	0	2	2.1	6.7	0.3	2.4	None	4.8	4.3
2	62.2	0.5-1.0	0	2	2.6	6.0	0.3	2.9	None	8.3	3.6
3	126.6	0.5-1.0	5	3	2.4	5.8	0.3	2.7	None	40	4.8
		1.1-2.0	5	3	2.1	6.6	0.3	2.3	Riprap D50=6"		
4	6.8	0.5-1.0	0	2	1.1	3.5	0.3	1.4	None		
5	217.3	0.5-1.0	10	2	2.3	7.3	0.3	2.6	None	53.6	5.0
6	30.1	0.5-1.0	0	2	2.0	5.0	0.3	2.3	None		
7 Lower	7.3	1	0	1.5	0.9	6.0	0.3	1.2	HDPE		
7 Upper	7.3	10	0	1.5	0.6	14.2	0.3	0.9	HDPE		
8 Lower	19.3	1	0	1.5	1.3	7.6	0.3	1.6	HDPE		
8 Upper	19.3	10	0	1.5	0.8	18	0.3	1.1	HDPE		
East	272.8	0.5-0.8	16	3	2.3	6.0	0.3	2.6	Gravel D50=3"		
Final Cover Road Side	31.5	0.5-2.4	0	3	1.8	5.7	0.3	2.1	Gravel D50=3"		
Spillway	358(6)	0.5	20	3	2.4	5.4	1.0	3.4	Gravel D50=3"		

NOTES:
(1) Maximum allowable velocity for channels without erosion protection 5 fps
(2) Channels with velocities greater than 5 fps for the 25-yr event and less than the 5 fps for the 2 year storm will not be lined.
(3) Maximum allowable velocity for gravel lined channels is 6 fps.
(4) Depth of Flow determined from minimum grade of Channel.
(5) Flow Velocity determined from maximum grade of Channel.
(6) Design Flow for Spillway is 100YR - 24 HR.

CULVERT DESIGNS

Culvert On Ditch	Flow (cfs)	Culvert Capacity (cfs)	No. Of Culverts	Culvert Diameter (in)	Total Capacity (cfs)
East	272.8	155	2	54	310
3	126.6	50	3	36	150
4	6.8	9	1	18	9
5	217.3	135	2	54	270
1 and 2	96.4	50	2	36	100

NOTES: (1) Culverts were sized assuming a Headwater/Culvert Diameter= 1.5.

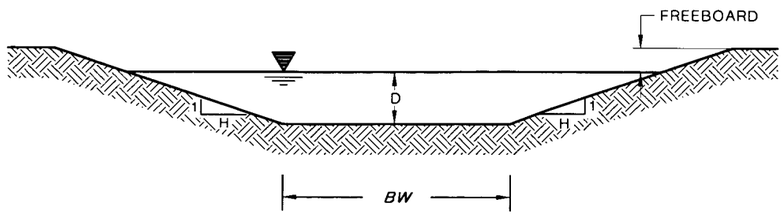

TYPICAL CHANNEL

NOTE:
FOR GENERAL NOTES AND LEGEND INFORMATION SEE DRAWING No. 2, "INDEX, LEGEND AND GENERAL NOTES".

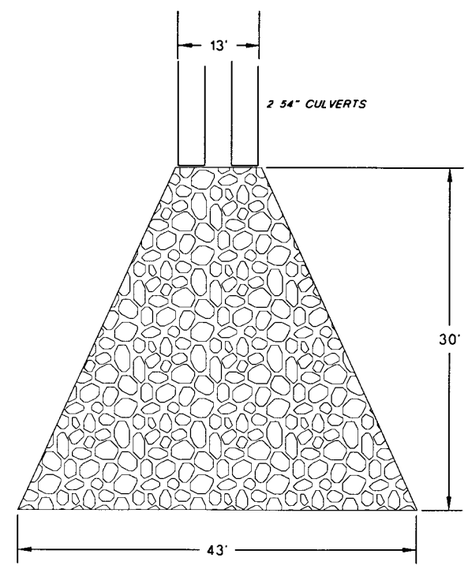

NOTE:
RIP RAP D_{50} = 2', DEPTH OF ROCK 3'

25 / 25 25 — RIP RAP OUTLET APRON DETAIL

Not To Scale

PATRICK G. CORSER NEW MEXICO 12236 REGISTERED PROFESSIONAL ENGINEER

PROFESSIONAL ENGINEER'S STATEMENT

I, Patrick G. Corser, state that this map was prepared under my supervision and all the information presented hereon is true and correct to the best of my knowledge and information.

11/5/98 — Patrick G. Corser
Date — Patrick G. Corser, NM P.E. 12236

Not For Construction

REV No.	REVISIONS	DATE	DESIGN BY	DRAWN BY	REVIEWED AND SIGNED BY
1	NOVEMBER 1998 REVISION	10/29/98	J.Pellicer	T.Smith	P.Corser
0	PART B PERMIT APPLICATION	12/12/97	PGC/JPP	K.Conrath	P.Corser

TRIASSIC PARK
WASTE DISPOSAL FACILITY

DRAWING TITLE:
SURFACE WATER CONTROL DETAILS

TerraMatrix
MONTGOMERY WATSON
Mining Group

Sheet 2 Of 2 Sheets
SCALE: Not to Scale
DRAWING No. 25

AutoCAD FILE: GANDY_DTLS.DWG PROJECT NUMBER: 602-0200

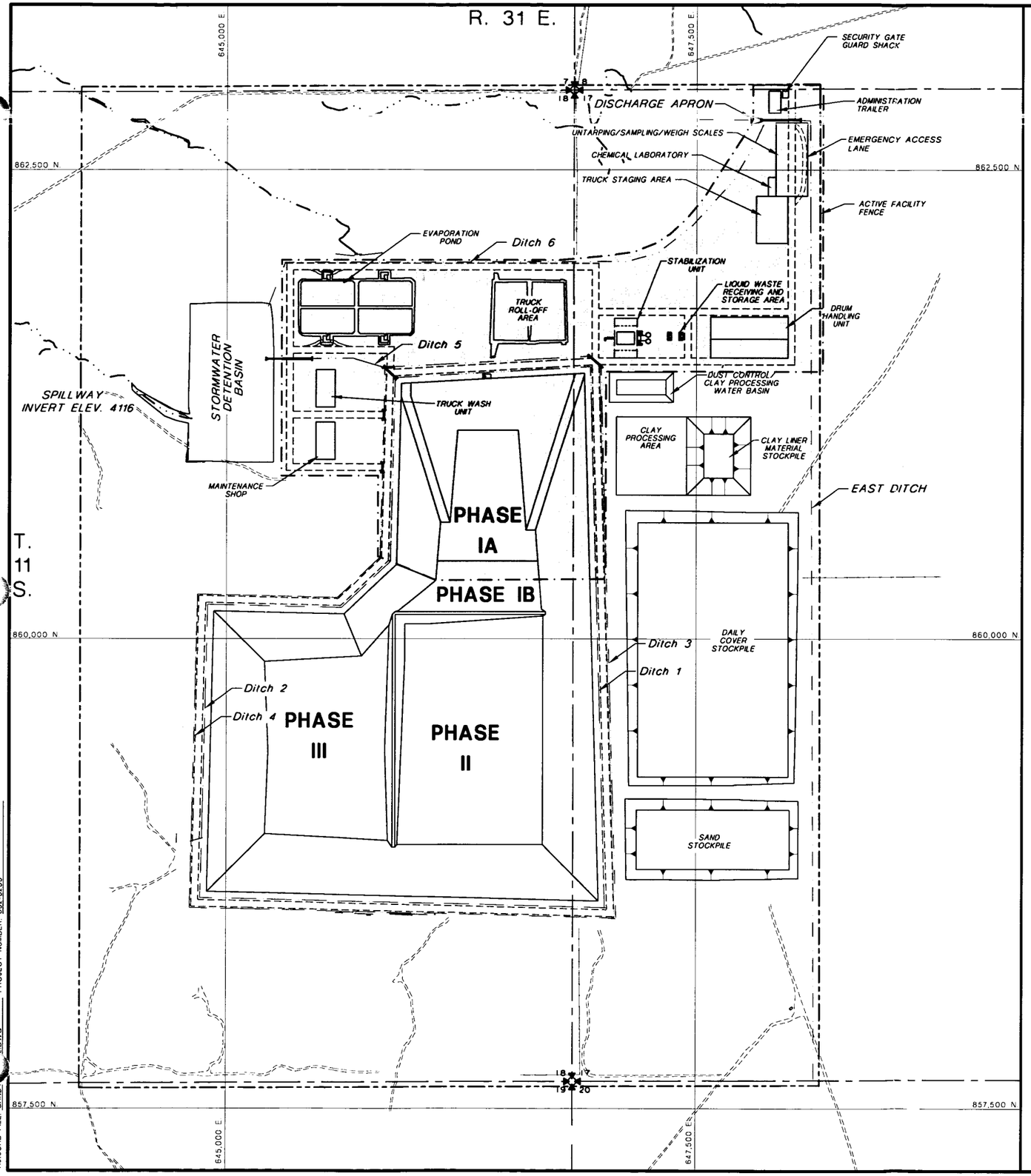

LEGEND

LIMITS OF LANDFILL OPERATIONS AND WASTE PROCESSING AREA

CONSTRUCTION OPERATIONS AREA

NOTES:
1. FOR GENERAL NOTES AND LEGEND INFORMATION SEE DRAWING No. 2, "INDEX, LEGEND AND GENERAL NOTES".

N

SCALE

300' 0 300' 600'

Not For Construction

REV. No.	REVISIONS	DATE	DESIGN BY	DRAWN BY	REVIEWED AND SIGNED BY
1	NOVEMBER 1998 REVISION	10/29/98	J.Pellicer	T.Smith	P.Corser
0	PART B PERMIT APPLICATION	12/12/97	PGC/JPP	T.Smith	P.Corser

PATRICK G. CORSER NEW MEXICO 12236 REGISTERED PROFESSIONAL ENGINEER

PROFESSIONAL ENGINEER'S STATEMENT

I, Patrick G. Corser, state that this map was prepared under my supervision and all the information presented hereon is true and correct to the best of my knowledge and information.

11/5/98 Patrick G. Corser
Date Patrick G. Corser, NM P.E. 12236

TRIASSIC PARK WASTE DISPOSAL FACILITY

DRAWING TITLE:

TRAFFIC PLAN

TerraMatrix
MONTGOMERY WATSON
Mining Group

Sheet 1 Of 2 Sheets
SCALE: AS NOTED
DRAWING No. 26

AutoCAD FILE: GANO_LDWG PROJECT NUMBER: 602-0200

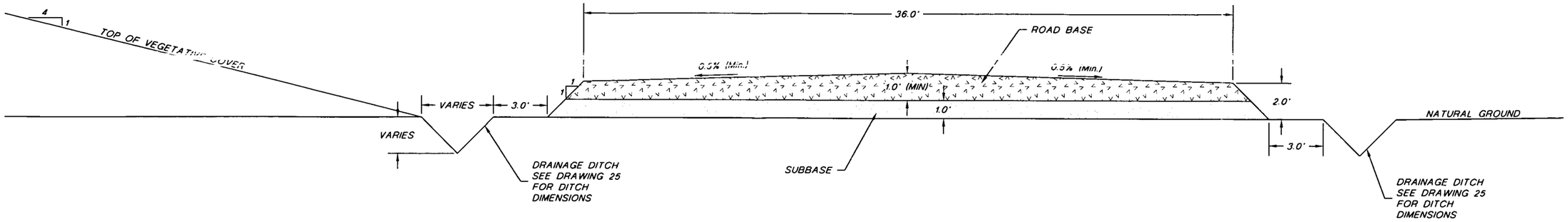

23 / 22 27 PERIMETER ROAD DETAIL

HORIZONTAL SCALE
0 3' 6'

VERTICAL SCALE
0 3' 6'

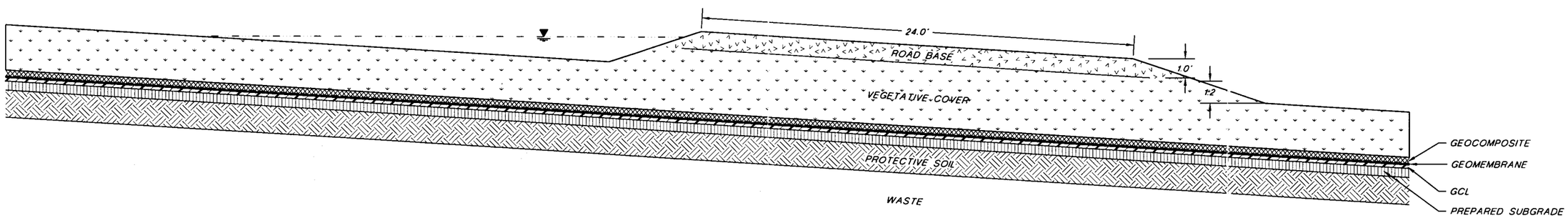

24 / 22 27 COVER ACCESS ROAD AND DITCH DETAIL

HORIZONTAL SCALE
0 3' 6'

VERTICAL SCALE
0 3' 6'

NOTES:
1. FOR GENERAL NOTES AND LEGEND INFORMATION SEE DRAWING No. 2, "INDEX, LEGEND AND GENERAL NOTES".
2. ROADBASE GRAVEL THICKNESS MAY BE REDUCED BASED ON EVALUATION OF SUBGRADE CONTOURS.

PATRICK G. CORSER NEW MEXICO 12236 REGISTERED PROFESSIONAL ENGINEER

PROFESSIONAL ENGINEER'S STATEMENT

I, Patrick G. Corser, state that this map was prepared under my supervision and all the information presented hereon is true and correct to the best of my knowleage and information.

11/5/98 Date — Patrick G. Corser, NM P.E. 12236

Not For Construction

REV No	REVISIONS	DATE	DESIGN BY	DRAWN BY	REVIEWED AND SIGNED BY
1	NOVEMBER 1998 REVISION	10/29/98	J.Pellicer	T.Smith	P.Corser
0	PART B PERMIT APPLICATION	12/12/97	PGC/JPP	TWS	PGC

TRIASSIC PARK
WASTE DISPOSAL FACILITY

DRAWING TITLE:
PERIMETER ROAD DETAILS

TerraMatrix
MONTGOMERY WATSON
Mining Group

Sheet 1 Of 1 Sheets
SCALE: AS NOTED
DRAWING No. 27

AutoCAD FILE: GANDY/JOB.DWG PROJECT NUMBER: 602-0200

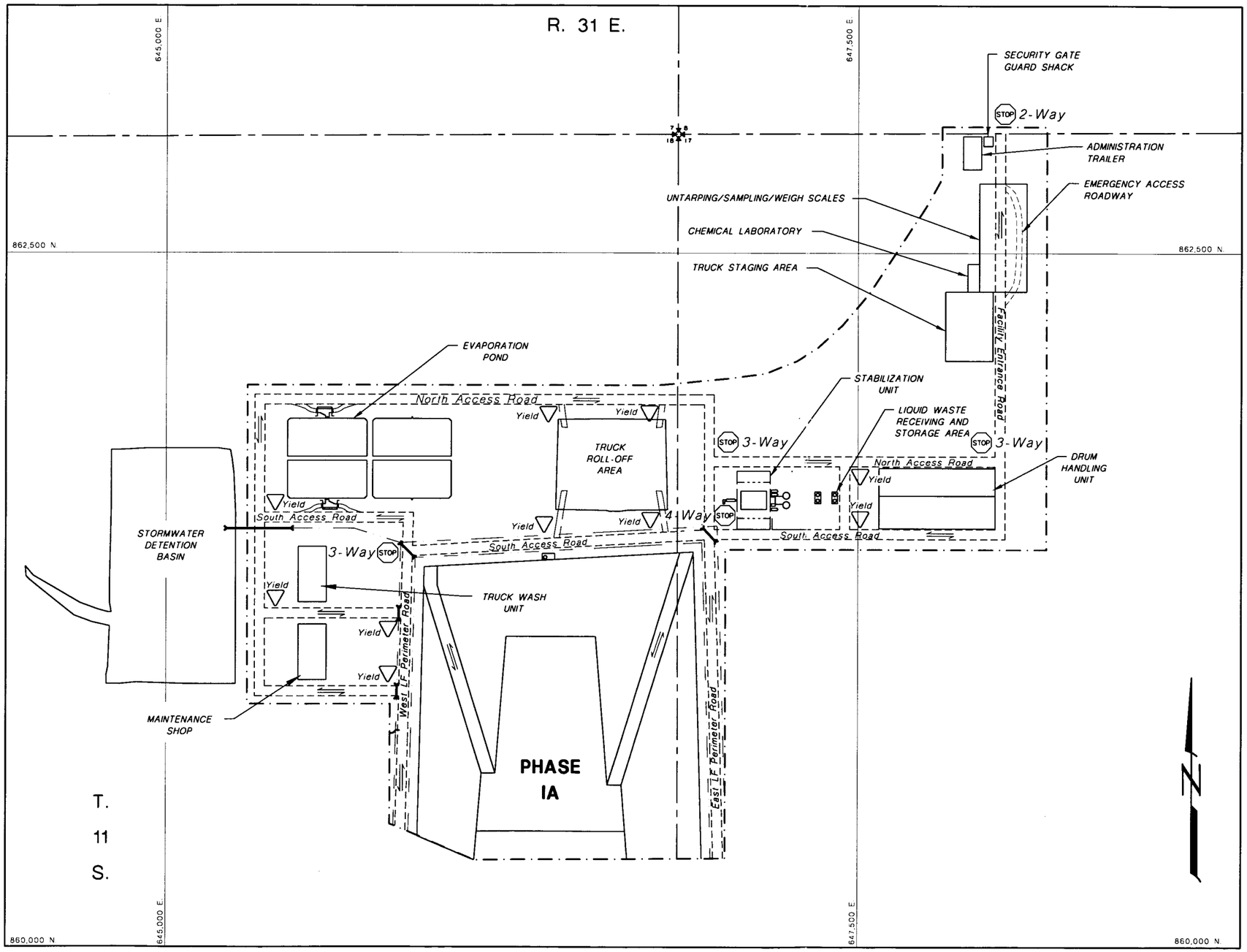

MAP KEY

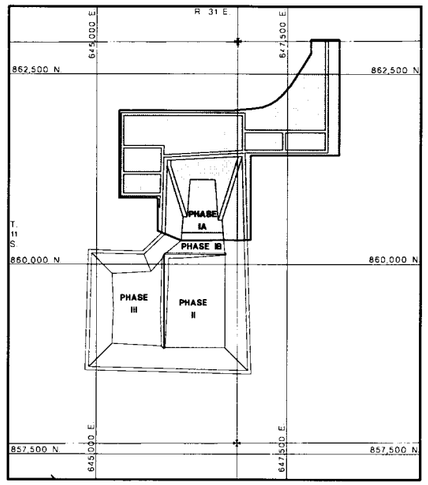

NOTES:

1. FOR GENERAL NOTES AND LEGEND INFORMATION SEE DRAWING No. 2, "INDEX, LEGEND AND GENERAL NOTES".
2. UNIMPROVED ROADS AND CONSTRUCTION HAUL ROADS NOT SHOWN. GRAVEL LINED ACCESS ROADS ARE 2 WAY TRAFFIC. ALL SITE ACCESS ROADS SPEED LIMIT IS 15 MPH, CONSTRUCTION HAUL ROAD SPEED LIMIT IS 35 MPH.

PATRICK G. CORSER NEW MEXICO 12236 REGISTERED PROFESSIONAL ENGINEER

PROFESSIONAL ENGINEER'S STATEMENT

I, Patrick G. Corser, state that this map was prepared under my supervision and all the information presented hereon is true and correct to the best of my knowledge and information.

11/5/98 Patrick G. Corser

Date Patrick G. Corser, NM P.E. 12236

Not For Construction

REV. No	REVISIONS	DATE	DESIGN BY	DRAWN BY	REVIEWED AND SIGNED BY
1	NOVEMBER 1998 REVISION	10/29/98	J.Pellicer	T.Smith	P.Corser
0	PART B PERMIT APPLICATION	12/12/97	PGC/JPP	K.Conrath	P.Corser

TRIASSIC PARK
WASTE DISPOSAL FACILITY

DRAWING TITLE:

TRAFFIC PLAN

TerraMatrix
MONTGOMERY WATSON
Mining Group

Sheet 2 Of 2 Sheets

SCALE: As Noted

DRAWING No. 26

AutoCAD FILE: GANDO_2.DWG PROJECT NUMBER: 602-0200

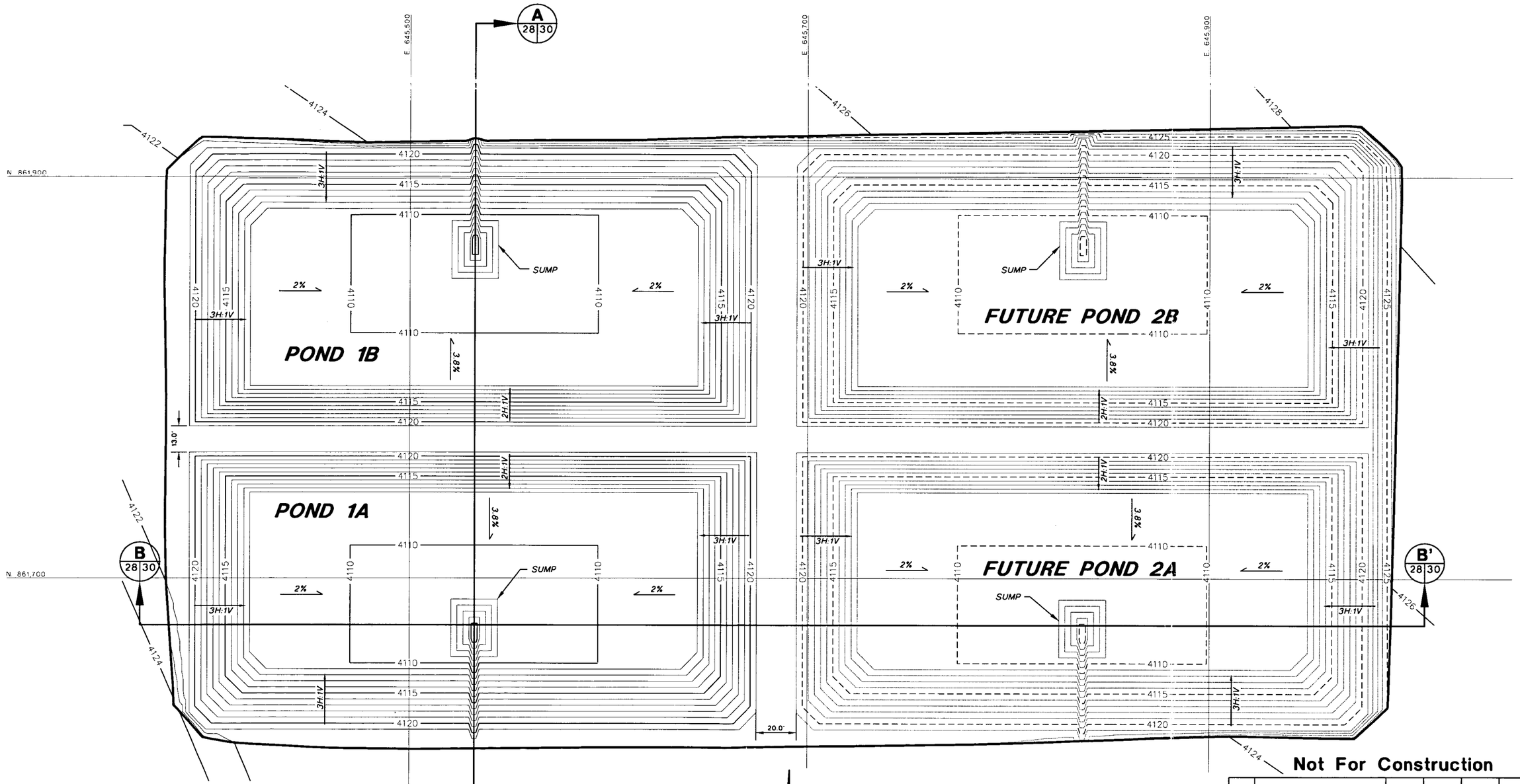

Not For Construction

REV No.	REVISIONS	DATE	DESIGN BY	DRAWN BY	REVIEWED AND SIGNED BY
0	PART B PERMIT APPLICATION	12/12/97	PGC/JPP	K.Conrath	P.Corser

TRIASSIC PARK
WASTE DISPOSAL FACILITY

DRAWING TITLE:
EVAPORATION POND SUBGRADE CONTOURS

NOTE:
FOR GENERAL NOTES AND LEGEND INFORMATION SEE DRAWING No. 2, "INDEX, LEGEND AND GENERAL NOTES".

SCALE

25' 0 25' 50'

CONTOUR INTERVAL 1 FT. – INSIDE OF POND
CONTOUR INTERVAL 2 FT. – OUTSIDE OF POND

PATRICK G. CORSER NEW MEXICO 12236 REGISTERED PROFESSIONAL ENGINEER

PROFESSIONAL ENGINEER'S STATEMENT

I, Patrick G. Corser, state that this map was prepared under my supervision and all the information presented hereon is true and correct to the best of my knowledge and information.

11/5/98 — *Patrick G. Corser, NM P.E. 12236*
Date

TerraMatrix
MONTGOMERY WATSON
Mining Group

Sheet 1 Of 1 Sheets
SCALE: As Shown
DRAWING No. 28

AutoCAD FILE: SUBGRD DWG PROJECT NUMBER: 602-0200

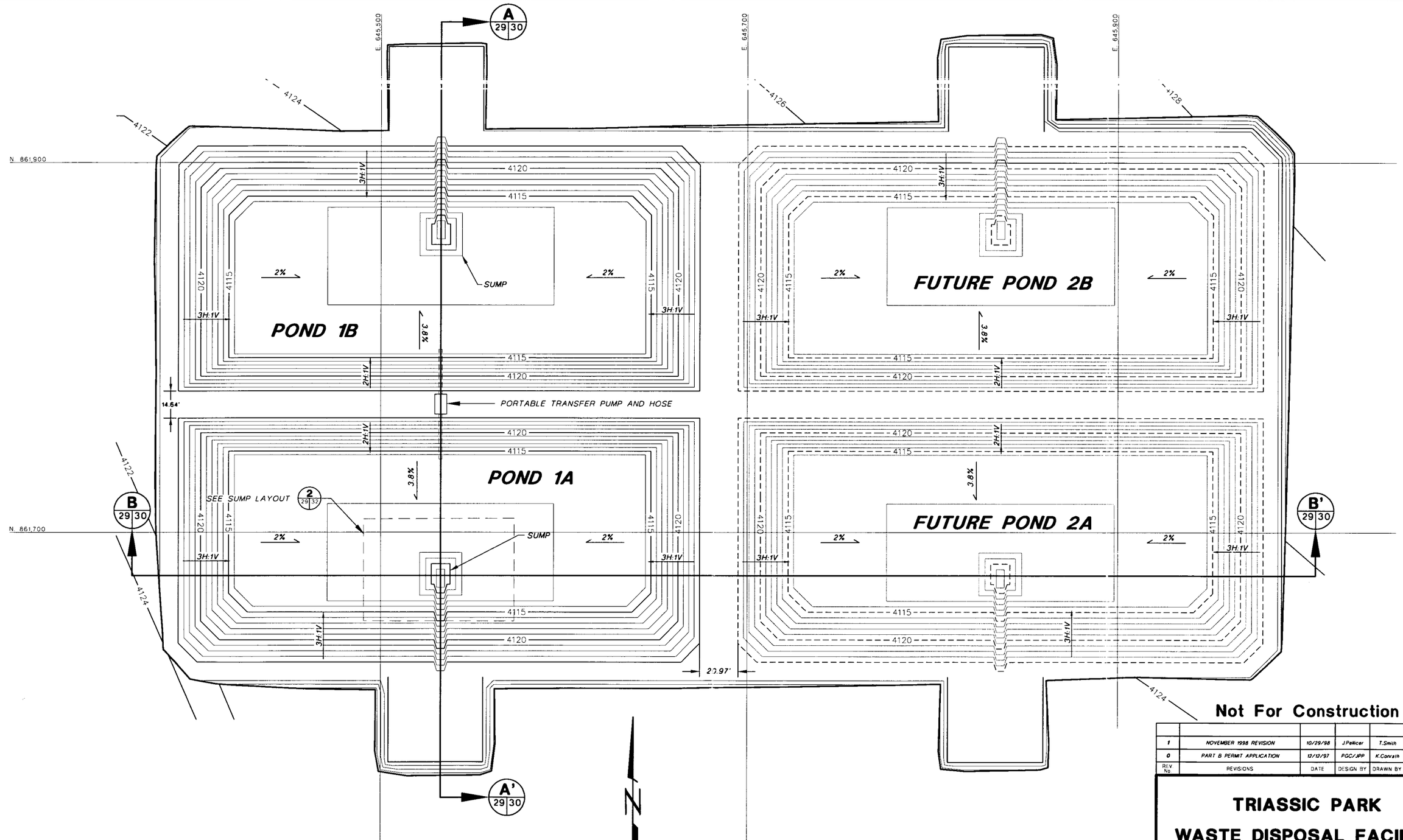

NOTE:
FOR GENERAL NOTES AND LEGEND INFORMATION SEE DRAWING No. 2, "INDEX, LEGEND AND GENERAL NOTES".

PROFESSIONAL ENGINEER'S STATEMENT

I, Patrick G. Corser, state that this map was prepared under my supervision and all the information presented hereon is true and correct to the best of my knowledge and information.

11/5/98 Patrick G. Corser
Date Patrick G. Corser, NM P.E. 12236

PATRICK G. CORSER NEW MEXICO 12236 REGISTERED PROFESSIONAL ENGINEER

Not For Construction

REV No.	REVISIONS	DATE	DESIGN BY	DRAWN BY	REVIEWED AND SIGNED BY
1	NOVEMBER 1998 REVISION	10/29/98	J.Pellicer	T.Smith	P.Corser
0	PART B PERMIT APPLICATION	12/12/97	PGC/JPP	K.Conrath	P.Corser

TRIASSIC PARK
WASTE DISPOSAL FACILITY

DRAWING TITLE:
EVAPORATION POND CLAY LINER CONTOURS

TerraMatrix
MONTGOMERY WATSON
Mining Group

Sheet 1 Of 1 Sheets
SCALE: As Shown
DRAWING No. 29

AutoCAD FILE: CLAY-C G PROJECT NUMBER: 602-0200

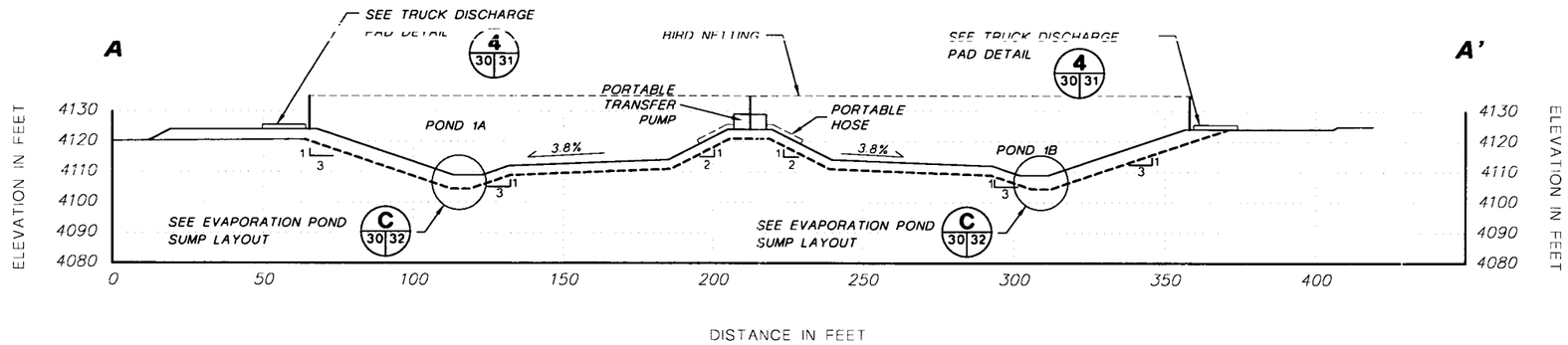

A A 28 30 29 30 CROSS-SECTION A-A'

HORIZONTAL SCALE
0 25' 50'

VERTICAL SCALE
0 25' 50'

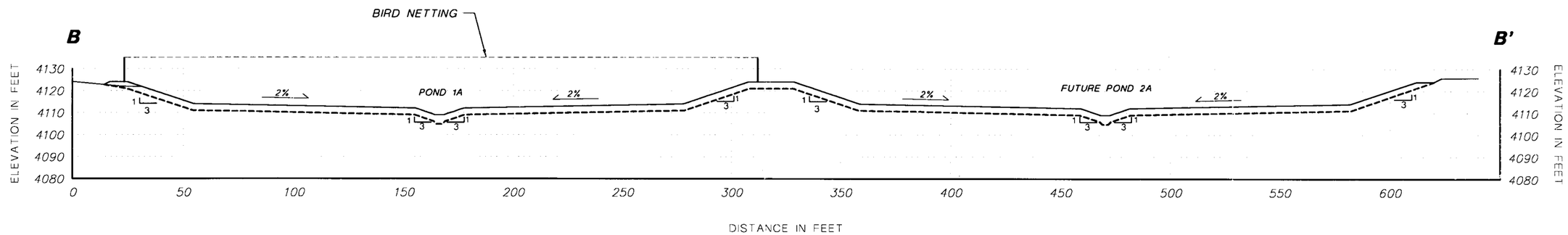

B B 28 30 29 30 CROSS-SECTION B-B'

HORIZONTAL SCALE
0 25' 50'

VERTICAL SCALE
0 25' 50'

NOTE:
FOR GENERAL NOTES AND LEGEND INFORMATION SEE DRAWING No. 2, "INDEX, LEGEND AND GENERAL NOTES".

PATRICK G. CORSER NEW MEXICO 12236 REGISTERED PROFESSIONAL ENGINEER

PROFESSIONAL ENGINEER'S STATEMENT

I, Patrick G. Corser, state that this map was prepared under my supervision and all the information presented hereon is true and correct, to the best of my knowledge and information.

11/5/98 — Date

Patrick G. Corser, NM P.E. 12236

Not For Construction

REV. No	REVISIONS	DATE	DESIGN BY	DRAWN BY	REVIEWED AND SIGNED BY
1	NOVEMBER 1998 REVISION	10/29/98	J.Pellicer	T.Smith	P.Corser
0	PART B PERMIT APPLICATION	12/12/97	PGC/JPP	K.Conrath	P.Corser

TRIASSIC PARK WASTE DISPOSAL FACILITY

DRAWING TITLE:
EVAPORATION POND CROSS SECTIONS

TerraMatrix
MONTGOMERY WATSON
Mining Group

Sheet 1 Of 1 Sheets
SCALE: As Shown
DRAWING No. 30

PROJECT NUMBER: 602-0200
AutoCAD FILE: EPSEC

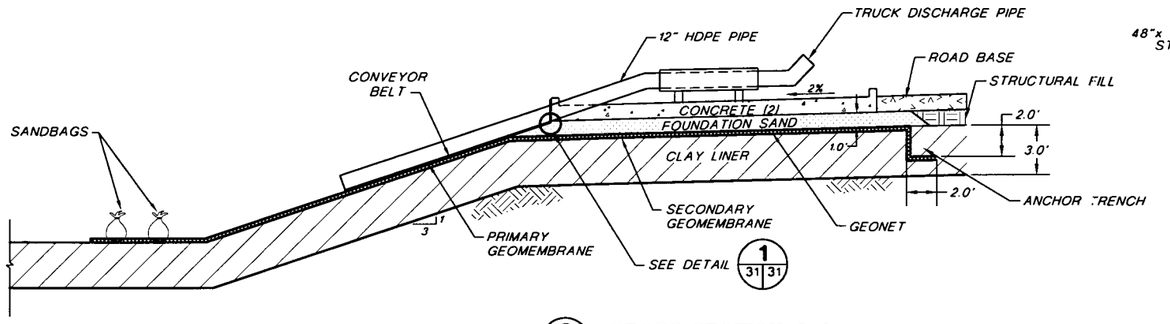

C 31 31 **CROSS-SECTION C-C'**
Not To Scale

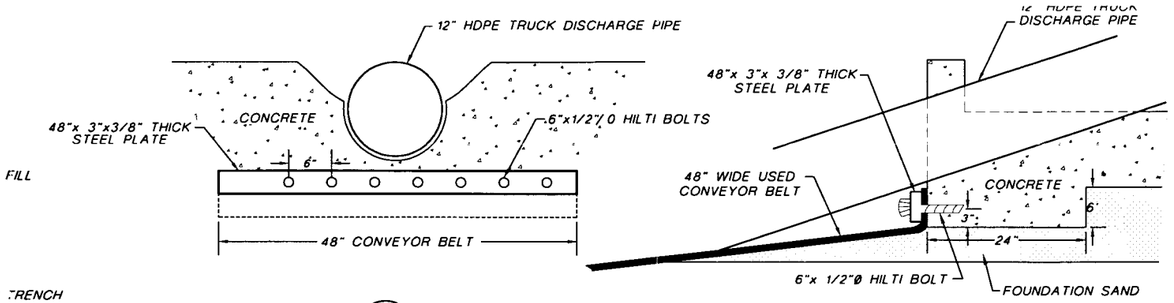

1 31 31 **DETAIL CONVEYOR BELT CONNECTION**
Not To Scale

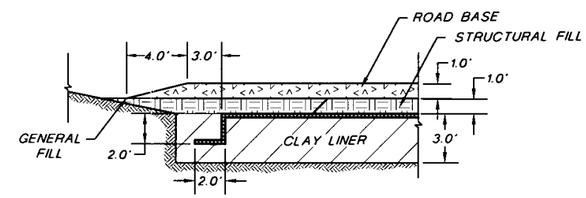

E 31 31 **CROSS-SECTION E-E' ACCESS RAMP**
Not To Scale

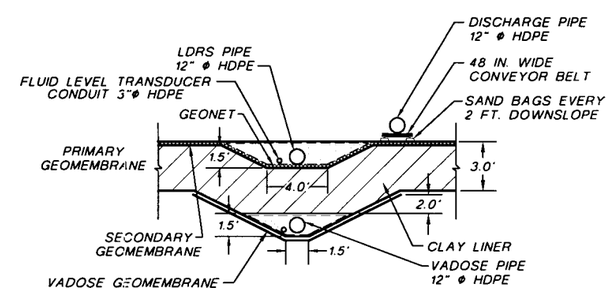

F 31 31 **CROSS-SECTION F-F' CONVEYOR BELT**
Not To Scale

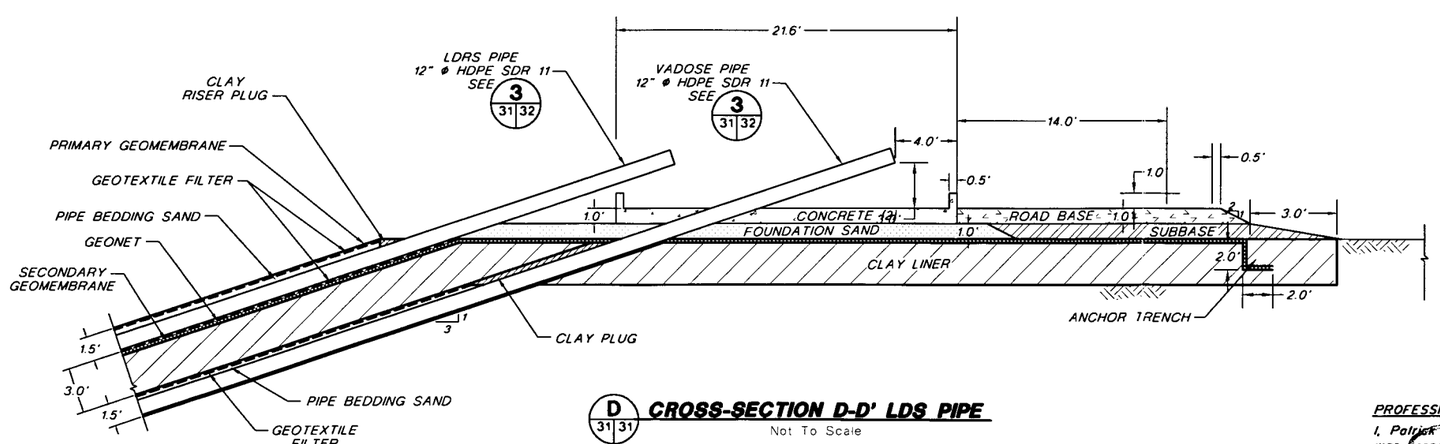

D 31 31 **CROSS-SECTION D-D' LDS PIPE**
Not To Scale

NOTES:
1. FOR GENERAL NOTES AND LEGEND INFORMATION SEE DRAWING No. 2, "INDEX, LEGEND AND GENERAL NOTES".
2. FOR CONCRETE DETAILS SEE DRAWING 45.

PROFESSIONAL ENGINEER'S STATEMENT

I, Patrick G. Corser, state that this map was prepared under my supervision and all the information presented hereon is true and correct to the best of my knowledge and information.

11/5/98 — Patrick G. Corser, NM P.E. 12236

PATRICK G. CORSER NEW MEXICO 12236 REGISTERED PROFESSIONAL ENGINEER

Not For Construction

REV No	REVISIONS	DATE	DESIGN BY	DRAWN BY	REVIEWED AND SIGNED BY
1	NOVEMBER 1998 REVISION	10/29/98	J.Pellicer	T.Smith	P.Corser
0	PART B PERMIT APPLICATION	12/13/97	PGC/JPP	K.Conrath	P.Corser

TRIASSIC PARK
WASTE DISPOSAL FACILITY

DRAWING TITLE:
EVAPORATION POND
TRUCK DISCHARGE STATION

TerraMatrix
MONTGOMERY WATSON
Mining Group

Sheet 2 Of 2 Sheets
SCALE: As Shown
DRAWING No. 31

PROJECT NUMBER: 602-0200
AutoCAD FILE: TANKPA

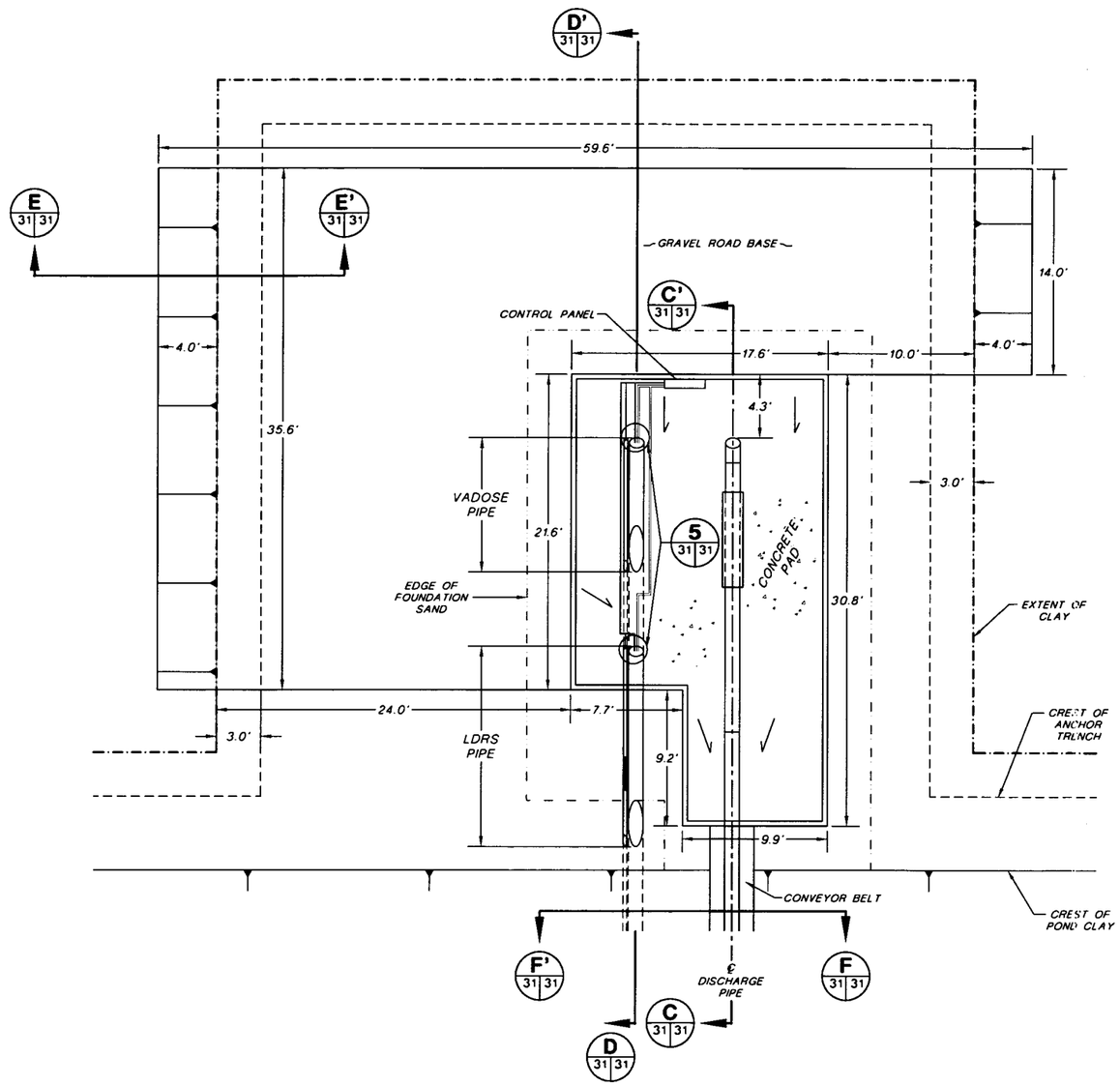

4 / 30 31 TRUCK DISCHARGE STATION LAYOUT

SCALE

5' 0 5' 10'

CONTOUR INTERVAL N.A.

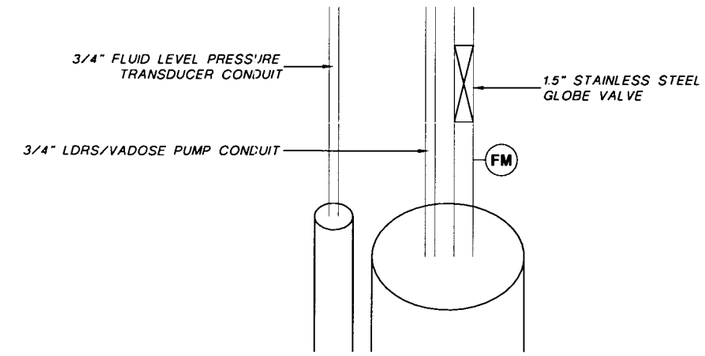

5 / 31 31 PIPE CONDUIT DETAIL

NOT TO SCALE

NOTES:
1. FOR GENERAL NOTES AND LEGEND INFORMATION SEE DRAWING No. 2, "INDEX, LEGEND AND GENERAL NOTES".
2. FOR CONCRETE DETAILS SEE DRAWING 45.

PROJECT NUMBER: 602-0220

AutoCAD FILE: TANKPA

PATRICK G. CORSER NEW MEXICO 12236 REGISTERED PROFESSIONAL ENGINEER

PROFESSIONAL ENGINEER'S STATEMENT

I, Patrick G. Corser, state that this map was prepared under my supervision and all the information presented hereon is true and correct to the best of my knowledge and information.

11/5/98 Date — Patrick G. Corser, NM P.E. 12236

Not For Construction

REV No	REVISIONS	DATE	DESIGN BY	DRAWN BY	REVIEWED AND SIGNED BY
1	NOVEMBER 1998 REVISION	10/29/98	J.Pallicar	T.Smith	P.Corser
0	PART B PERMIT	11/17/97	PGC/JKK/JP	K.Conrath	P.Corser

TRIASSIC PARK
WASTE DISPOSAL FACILITY

DRAWING TITLE:

EVAPORATION POND TRUCK DISCHARGE STATION

TerraMatrix
MONTGOMERY WATSON
Natural Resources Group

Sheet 1 Of 2 Sheets

SCALE: As Shown

DRAWING No. 31

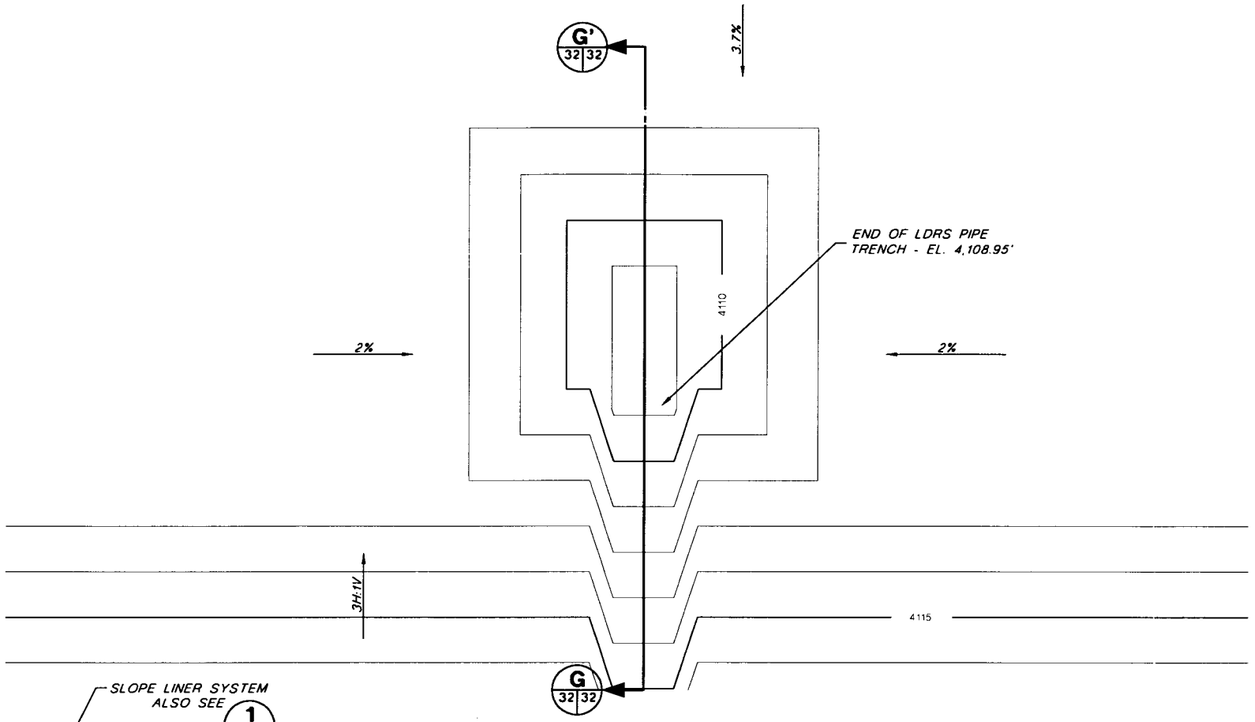

C 29 32 EVAPORATION POND SUMP LAYOUT

SCALE
0 5' 10'
Feet

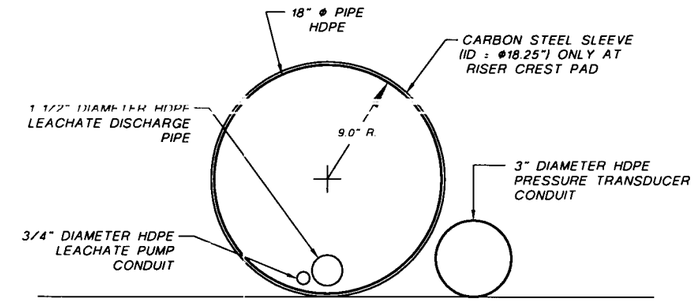

3 31 32 LCRS AND LDRS RISER PIPE DETAIL

SCALE
0 0.5' 1.0'
Feet

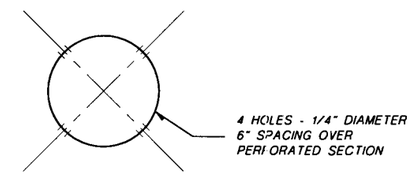

11 18 18 PIPE PERFORATION DETAIL

Not To Scale

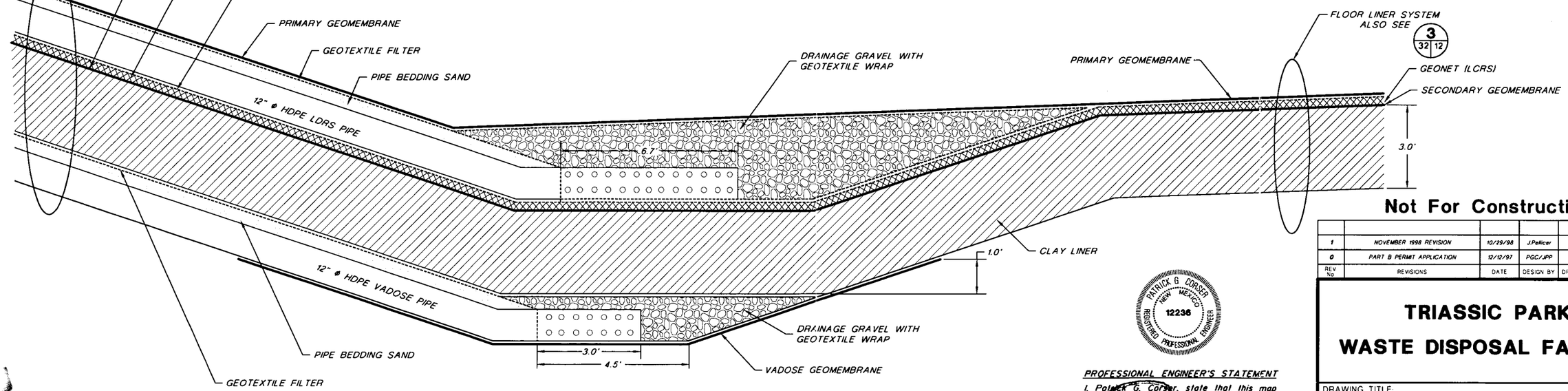

G 32 32 EVAPORATION POND SUMP CROSS-SECTION

Not To Scale

NOTE:
FOR GENERAL NOTES AND LEGEND INFORMATION SEE DRAWING No. 2, "INDEX, LEGEND AND GENERAL NOTES".

PROJECT NUMBER 602-0200

AutoCAD FILE LDSPLA

Not For Construction

REV No	REVISIONS	DATE	DESIGN BY	DRAWN BY	REVIEWED AND SIGNED BY
1	NOVEMBER 1998 REVISION	10/29/98	J.Pellicer	T.Smith	P.Corser
0	PART B PERMIT APPLICATION	12/12/97	PGC/JPP	T.Smith	P.Corser

PATRICK G. CORSER
NEW MEXICO
12236
REGISTERED PROFESSIONAL ENGINEER

PROFESSIONAL ENGINEER'S STATEMENT

I, Patrick G. Corser, state that this map was prepared under my supervision and all the information presented hereon is true and correct to the best of my knowledge and information.

11/5/98 — Patrick Corser
Date — Patrick G. Corser, NM P.E. 12236

TRIASSIC PARK
WASTE DISPOSAL FACILITY

DRAWING TITLE:
EVAPORATION POND LDRS AND VADOSE PLAN AND DETAILS

TerraMatrix
MONTGOMERY WATSON
Mining Group

Sheet 1 Of 1 Sheets
SCALE: As Shown
DRAWING No. 32

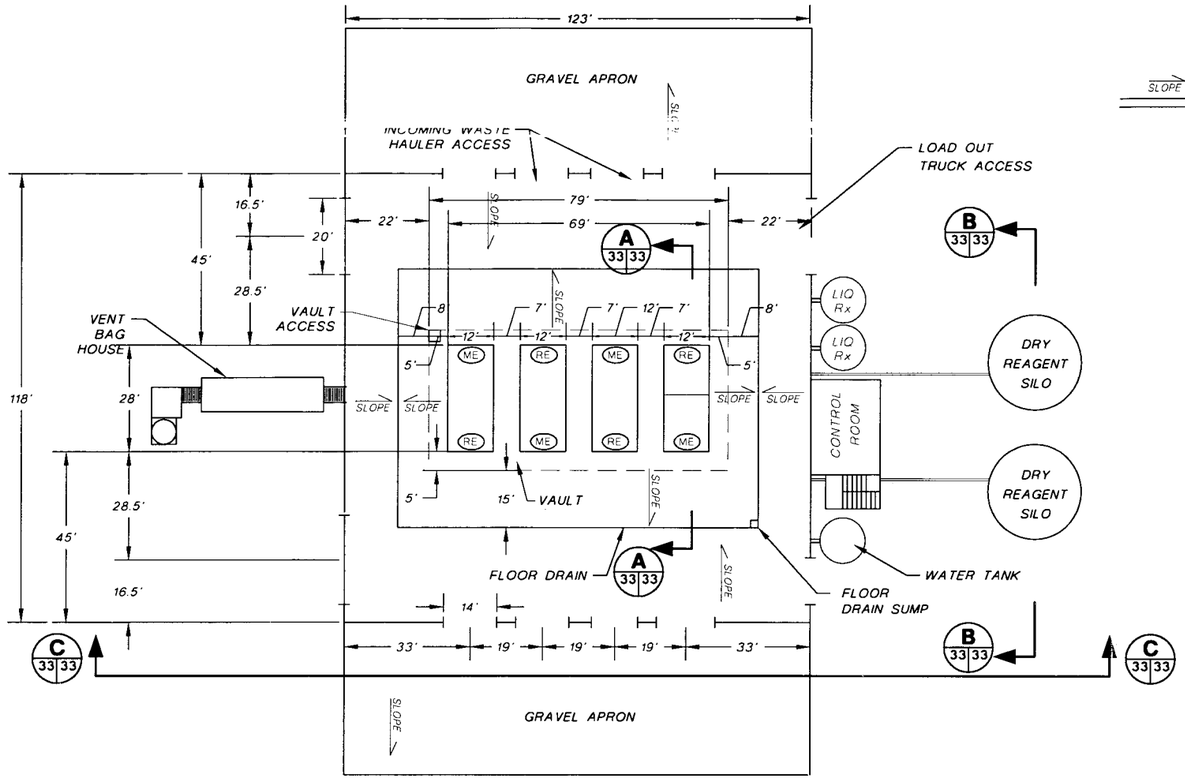

STABILIZATION BUILDING FLOOR PLAN

SCALE 20' 0 20' 40'

LEGEND

(RE) RECEIVING END
(ME) MIXING END

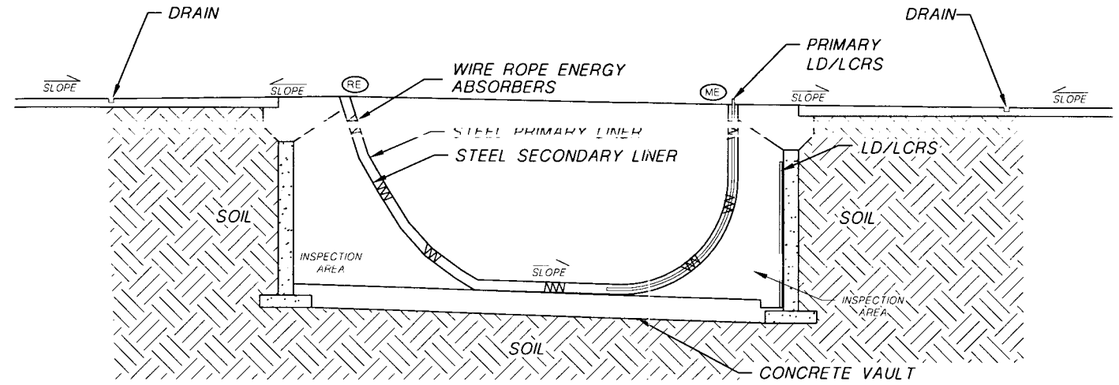

A 33 33 TYPICAL BIN & VAULT SECTION

SCALE 5' 0 5' 10'

NOTE:
SEE DRAWING 35 FOR BIN DETAILS

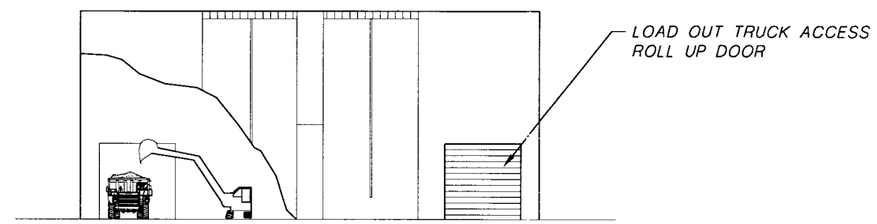

B 33 33 TYPICAL END ELEVATION

Not To Scale

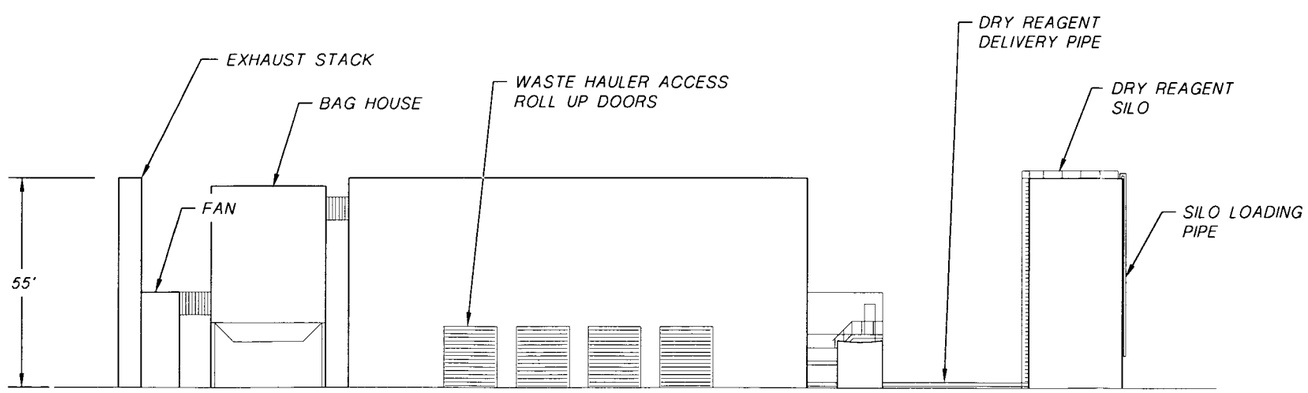

C 33 33 TYPICAL FRONT ELEVATION

Not To Scale

NOTE:
FOR GENERAL NOTES AND LEGEND INFORMATION SEE DRAWING No. 2, "INDEX, LEGEND AND GENERAL NOTES".

PATRICK G. CORSER NEW MEXICO 12236 REGISTERED PROFESSIONAL ENGINEER

PROFESSIONAL ENGINEER'S STATEMENT

I, Patrick G. Corser, state that this map was prepared under my supervision and all the information presented hereon is true and correct to the best of my knowledge and information.

11/5/98 Patrick Corser
Date Patrick G. Corser, NM P.E. 12236

Not For Construction

REV. No	REVISIONS	DATE	DESIGN BY	DRAWN BY	REVIEWED AND SIGNED BY
1	NOVEMBER 1998 REVISION	10/29/98	J.Pellicer	T.Smith	P.Corser
0	PART B PERMIT APPLICATION	12/12/97	PGC/JPP	K.Conrath	P.Corser

TRIASSIC PARK
WASTE DISPOSAL FACILITY

DRAWING TITLE:
STABILIZATION UNIT GENERAL ARRANGEMENT

TerraMatrix
MONTGOMERY WATSON
Mining Group

Sheet 1 Of 1 Sheets
SCALE: As Shown
DRAWING No. 33

PROJECT NUMBER 602-0200
AutoCAD FILE: CONCS

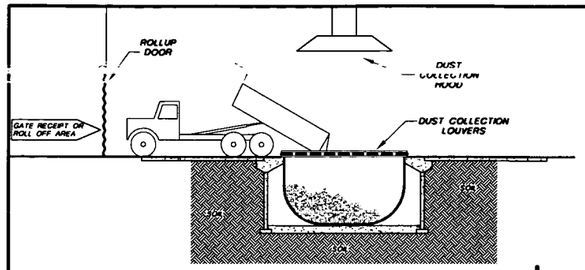

- STAGE TRUCK
- DUST COLLECTION SYSTEM ON
- DUMP WASTE LOAD INTO BIN
- EVACUATE DUST
- WASH OUT ROLLOFF BED

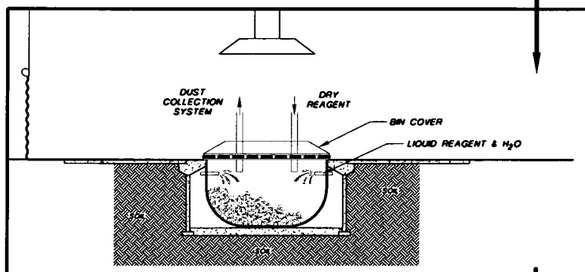

REAGENT ADDITION

- PLACE BIN COVER
- CONNECT DRY REGENT AND DUST COLLECTION DUCTS
- DELIVER DRY/WET REGENT
- EVACUATE DUST
- REMOVE BIN COVER

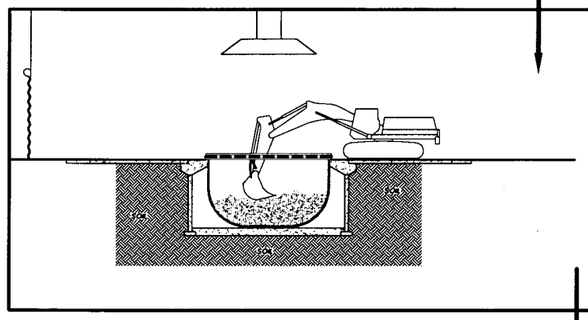

STABILIZATION MIXING

- DUST COLLECTION SYSTEM ON
- POSITION BACKHOE MIXER
- MIX/STABILIZE WASTE
- SAMPLE/PAINT FILTER TEST

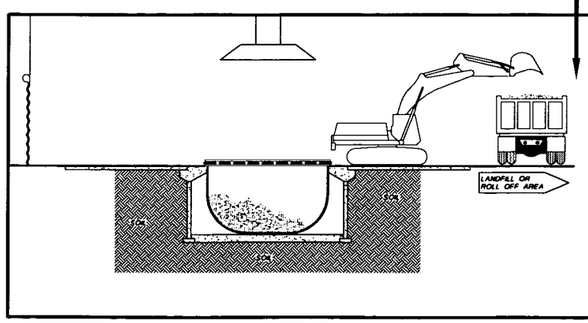

STABILIZED WASTE LOADOUT

- POSITION ROLL-OFF TRUCK
- DUST COLLECTION SYSTEM ON
- LOAD OUT STABILIZED WASTE
- SAMPLE/TCLP TEST
- PLACE TRUCK COVER
- TRUCK TO ROLL OFF AREA OR LANDFILL

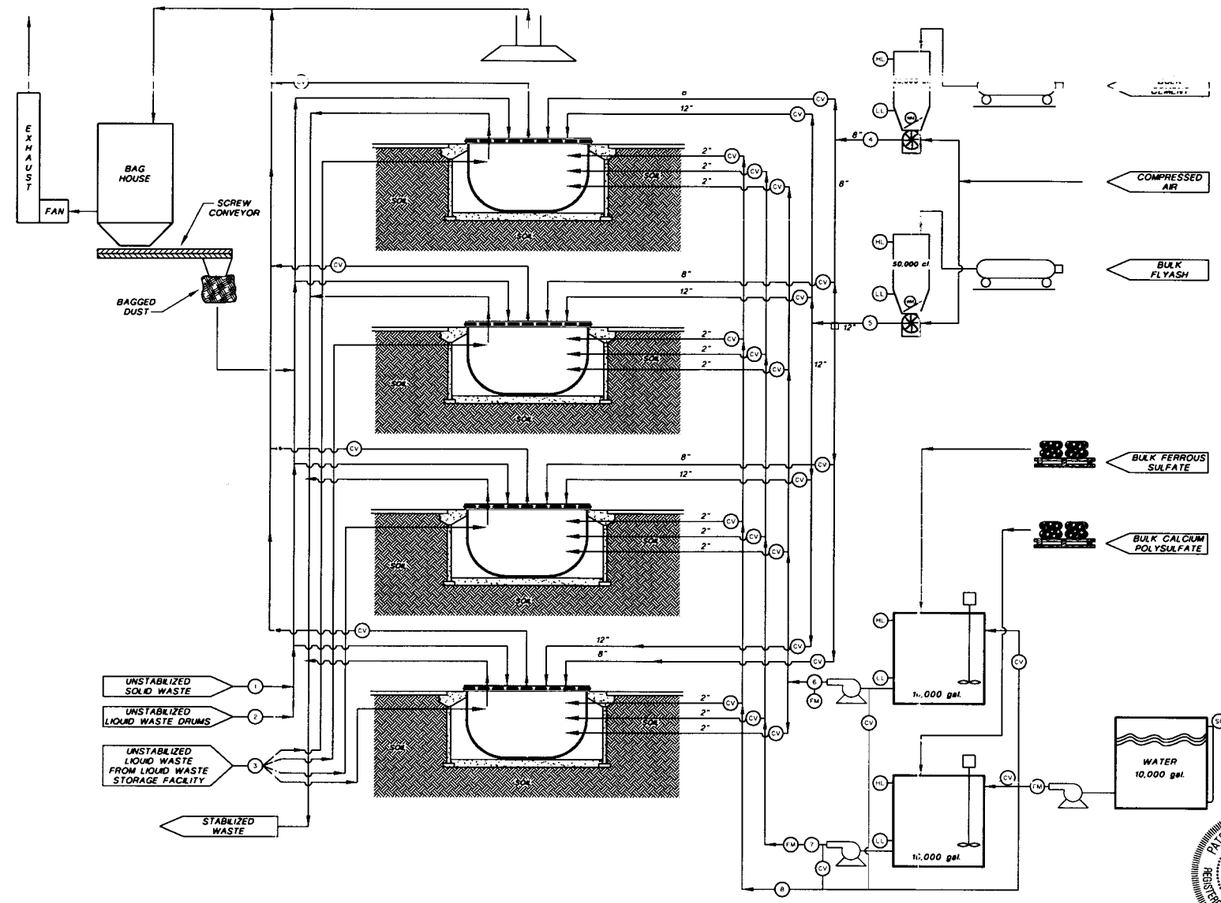

LEGEND

- HLC — HIGH LEVEL CUT-OFF
- LLC — LOW LEVEL CUT OFF
- WM — WEIGHT METER
- FM — FLOW METER
- CV — CONTROL VALVE
- SG — SIGHT GAUGE

PATRICK G. CORSER NEW MEXICO 12236 REGISTERED PROFESSIONAL ENGINEER

PROFESSIONAL ENGINEER'S STATEMENT

I, Patrick G. Corser, state that this map was prepared under my supervision and all the information presented herein is true and correct to the best of my knowledge and information.

11/5/98 — Patrick G. Corser, NM P.E. 12236
Date

Not For Construction

TYPICAL MASS BALANCE SCHEDULE		TYPICAL REAGENT: WASTE RATIOS
WASTE FLOW		
SOLIDS	(TPD)	
LIQUID	(GPD)	
SOLID REAGENT FLOW		
REAGENT 1	(TPD)	1.3l:1l Solid Waste, 50lb:1 gal Liquid Waste
REAGENT 2	(TPD)	2l:1l Solid Waste, 35lb:1 gal Liquid Waste
LIQUID REAGENT FLOW		
CALCIUM POLYSULFIDE	(GPD)	2 gal:1l Solid Waste, 0.004 gal:gal Liquid Waste
FERROUS SULFATE	(GPD)	1.5 gal:1l Solid Waste, 0.0004 gal:gal Liquid Waste
WATER	(GPD)	1.5 gal:1l Solid Waste
STABLIZED WASTE	(TPD)	approximate

NOTES:
1) FOR GENERAL NOTES AND LEGEND INFORMATION SEE DRAWING No. 2, "INDEX, LEGEND AND GENERAL NOTES".
2) ACTUAL REAGENT: WASTE RATIOS ARE DEPENDENT ON SPECIFIC CHARACTERISTIC OF WASTE.

REV. No.	REVISIONS	DATE	DESIGN BY	DRAWN BY	REVIEWED AND SIGNED BY
1	NOVEMBER 1998 REVISION	10/29/98	J.Pellicer	T.Smith	P.Corser
0	PART B PERMIT APPLICATION	12/12/97	PGC/JPP	K.Conrath	P.Corser

TRIASSIC PARK
WASTE DISPOSAL FACILITY

DRAWING TITLE:
STABILIZATION UNIT WASTE FLOW DIAGRAM

TerraMatrix
MONTGOMERY WATSON
Mining Group

Sheet 1 Of 1 Sheets
SCALE: As Shown
DRAWING No. 34

PROJECT NUMBER: 602-0200
AutoCAD FILE: GM-FLO

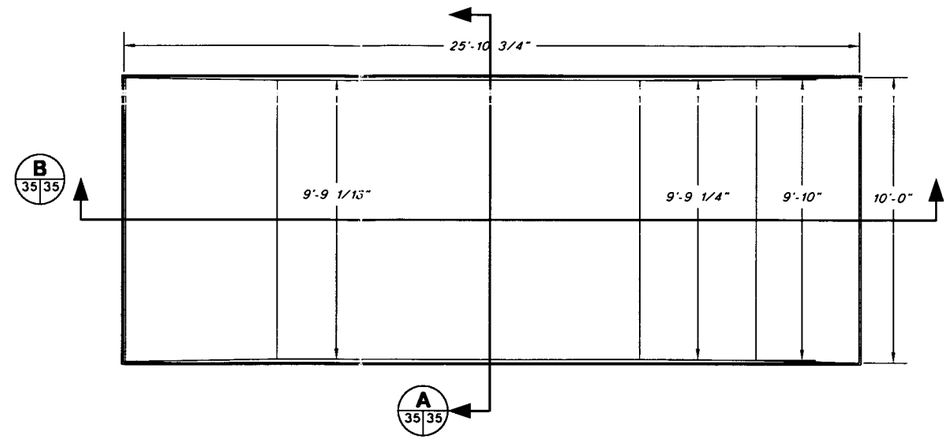

PLAN VIEW - INNER LINER

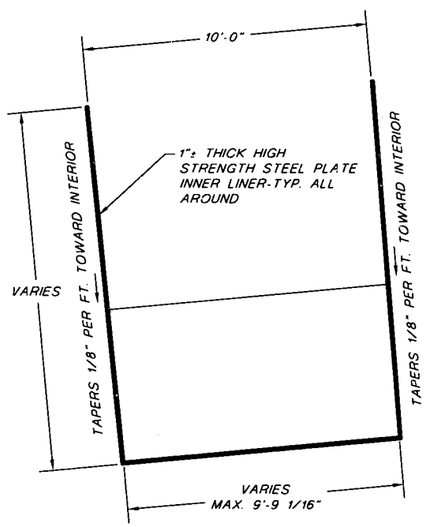

A 35 35 CROSS SECTION - INNER LINER

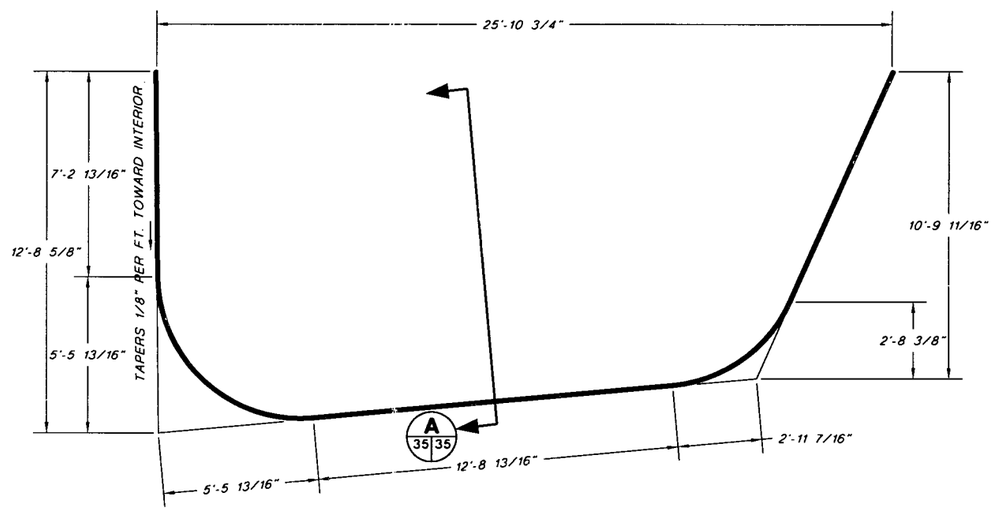

B 35 35 LONGITUDINAL SECTION - INNER LINER

SCALE

4' 0 2' 4' 6'

REV. No	REVISIONS	DATE	DESIGN BY	DRAWN BY	REVIEWED AND SIGNED BY
1	NOVEMBER 1998 REVISION	10/29/98	J.Pellicer	T.Smith	P.Corser
0	PART B PERMIT APPLICATION	12/12/97	PGC/JPP	K.Conrath	P.Corser

TRIASSIC PARK
WASTE DISPOSAL FACILITY

DRAWING TITLE:

STABILIZATION UNIT BIN DESIGN

TerraMatrix
MONTGOMERY WATSON
Mining Group

Sheet 1 Of 1 Sheets

SCALE: As Shown

DRAWING No. 35

FRED H. SCHOTT & ASSOCIATES
CIVIL and STRUCTURAL ENGINEERING • LAND PLANNING & BUILDING DESIGN
200 Suburban Road, Suite A San Luis Obispo, CA 93401
(805) 544-1216 FAX (805) 544-2004

The plans, specifications, ideas and designs incorporated herein, are instruments of service prepared for the construction of the work shown hereon and are the property of Fred H. Schott & Associates and shall not be used in whole or in part for any other project without authority of Fred H. Schott & Associates

© Fred H. Schott & Associates

PROJECT NUMBER: 602-0200

AutoCAD FILE: GM-BIN1

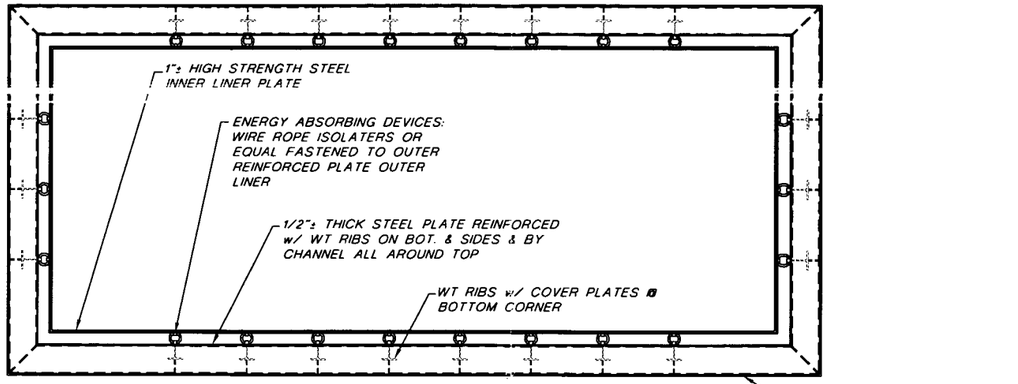

TOP VIEW

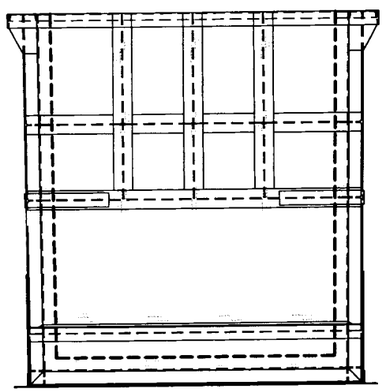

LEFT SIDE ELEVATION

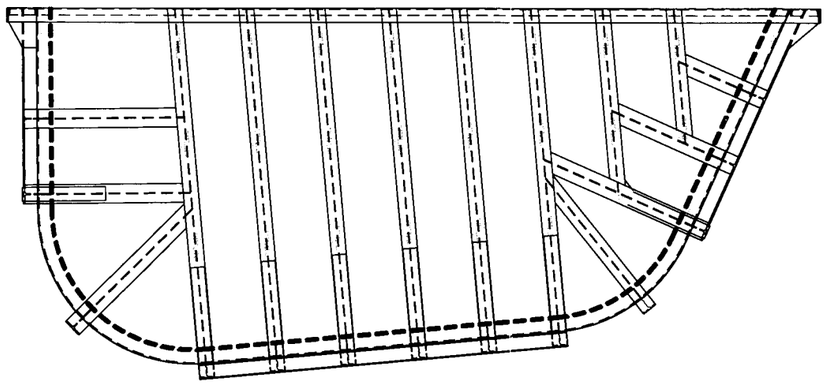

TYPICAL SIDE ELEVATION

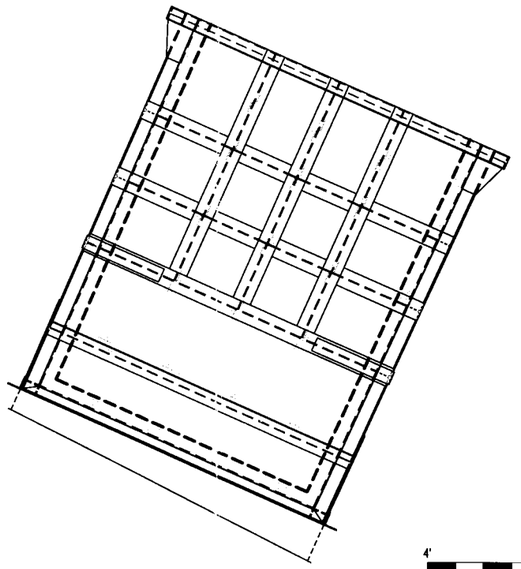

RIGHT SIDE ELEVATION

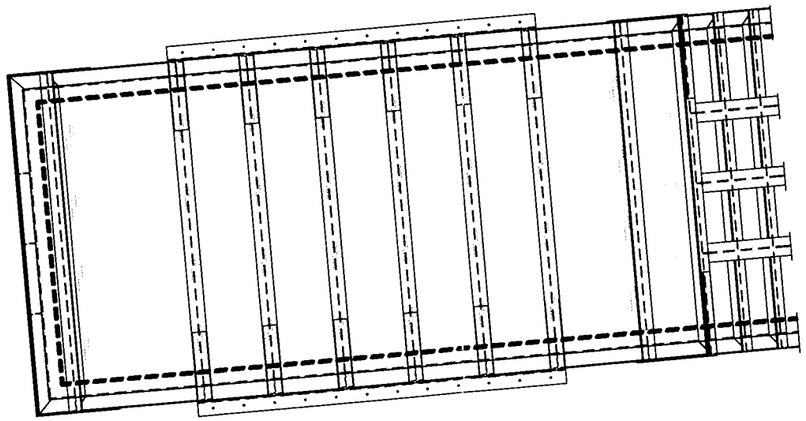

VIEW OF BOTTOM

SCALE

4' 0 2' 4' 6'

REV. No.	REVISIONS	DATE	DESIGN BY	DRAWN BY	REVIEWED AND SIGNED BY
1	NOVEMBER 1998 REVISION	10/29/98	J.Pelicer	T.Smith	P.Corser
0	PART B PERMIT APPLICATION	12/12/97	PGC/JPP	K.Conrath	P.Corser

TRIASSIC PARK
WASTE DISPOSAL FACILITY

DRAWING TITLE:

STABILIZATION UNIT
BIN DESIGN DETAILS

FRED H. SCHOTT & ASSOCIATES
CIVIL and STRUCTURAL ENGINEERING • LAND PLANNING & BUILDING DESIGN
200 Suburban Road, Suite A San Luis Obispo, CA 93401
(805) 544-1216 FAX (805) 544-2004

The plans, specifications, ideas and designs incorporated herein, are instruments of service prepared for the construction of the work shown hereon and are the property of Fred H. Schott & Associates and shall not be used in whole or in part for any other project without authority of Fred H. Schott & Associates
© Fred H. Schott & Associates

TerraMatrix
MONTGOMERY WATSON
Mining Group

Sheet 1 Of 2 Sheets

SCALE: As Shown

DRAWING No. 36

AutoCAD FILE: GM-BIN2.DWG PROJECT NUMBER: 602-0200

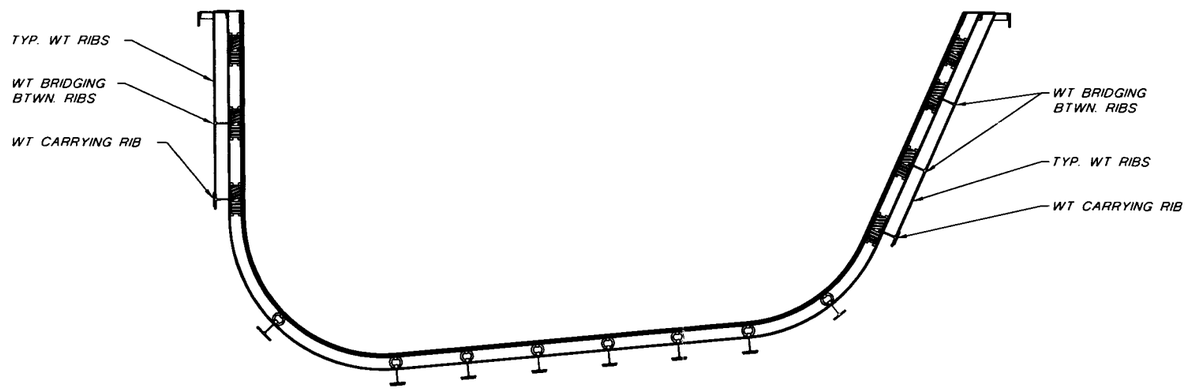

LONGITUDINAL SECTION - INNER/OUTER LINERS & FRAMING

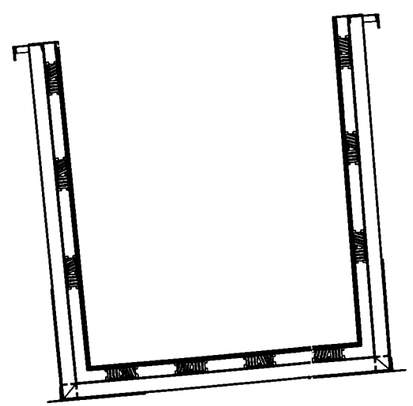

LATTERAL SECTION - INNER/OUTER LINERS & FRAMING

SCALE

4' 0 2' 4' 6'

REV. No	REVISIONS	DATE	DESIGN BY	DRAWN BY	REVIEWED AND SIGNED BY
1	NOVEMBER 1998 REVISION	10/29/98	J.Pellicer	T.Smith	P.Corser
0	PART B PERMIT APPLICATION	12/12/97	PGC/JPP	K.Conrath	P.Corser

TRIASSIC PARK WASTE DISPOSAL FACILITY

DRAWING TITLE:

STABILIZATION UNIT BIN DESIGN DETAILS

FRED H. SCHOTT & ASSOCIATES
CIVIL and STRUCTURAL ENGINEERING • LAND PLANNING & BUILDING DESIGN
200 Suburban Road, Suite A San Luis Obispo, CA 93401
(805) 544-1216 FAX (805) 544-2004

The plans, specifications, ideas and designs incorporated herein, are instruments of service prepared for the construction of the work shown hereon and are the property of Fred H. Schott & Associates and shall not be used in whole or in part for any other project without authority of Fred H. Schott & Associates

© Fred H. Schott & Associates

TerraMatrix
MONTGOMERY WATSON
Mining Group

Sheet 2 Of 2 Sheets

SCALE: As Shown

DRAWING No. 36

AutoCAD FILE: GM-BIN3.DWG PROJECT NUMBER: 602.0200

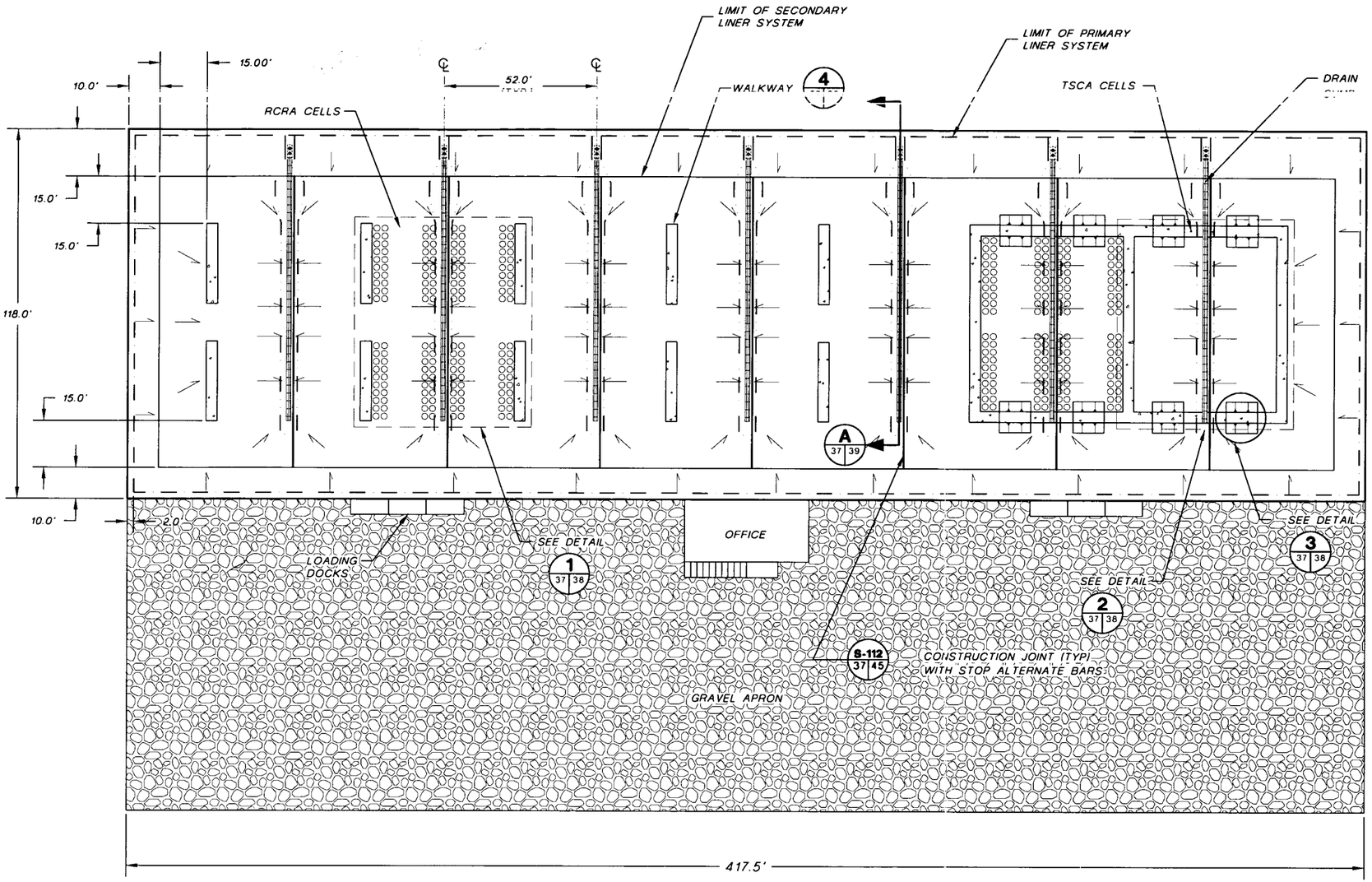

TYPICAL DRUM FLOOR LAYOUT

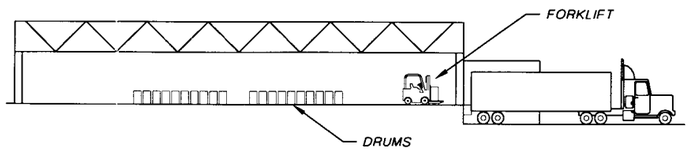

TYPICAL SIDE ELEVATION

LEGEND

- DRAINAGE FLOW DIRECTION ON TOP OF CONCRETE
- EXTENT OF PRIMARY GEOMEMBRANE
- EXTENT OF SECONDARY GEOMEMBRANE
- DRUMS

SCALE

20' 0 20' 40'

PATRICK G. CORSER NEW MEXICO 12236 REGISTERED PROFESSIONAL ENGINEER

PROFESSIONAL ENGINEER'S STATEMENT

I, Patrick G. Corser, state that this map was prepared under my supervision and all the information presented hereon is true and correct to the best of my knowledge and information.

11/5/98 Patrick G. Corser
Date Patrick G. Corser, NM P.E. 12236

Not For Construction

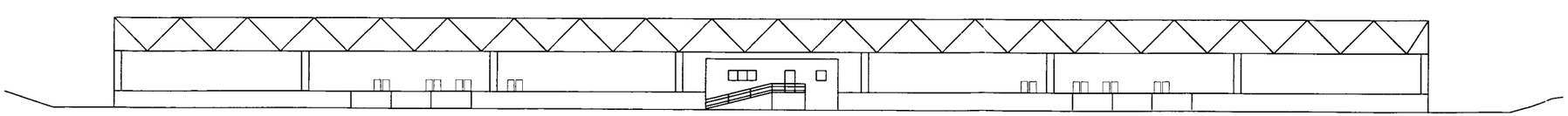

TYPICAL FRONT ELEVATION

NOTE:
FOR GENERAL NOTES AND LEGEND INFORMATION SEE DRAWING No. 2, "INDEX, LEGEND AND GENERAL NOTES".

REV. No	REVISIONS	DATE	DESIGN BY	DRAWN BY	REVIEWED AND SIGNED BY
1	NOVEMBER 1998 REVISION	10/30/98	J.Pellicer	T.Smith	P.Corser
0	PART B PERMIT APPLICATION	12/12/97	PGC/JPP	K.Conrath	P.Corser

TRIASSIC PARK
WASTE DISPOSAL FACILITY

DRAWING TITLE:
DRUM HANDLING UNIT GENERAL ARRANGEMENT

TerraMatrix
MONTGOMERY WATSON
Mining Group

Sheet 1 Of 1 Sheets
SCALE: As Shown
DRAWING No. 37

PROJECT NUMBER 602-0200
AutoCAD FILE GM-DHU

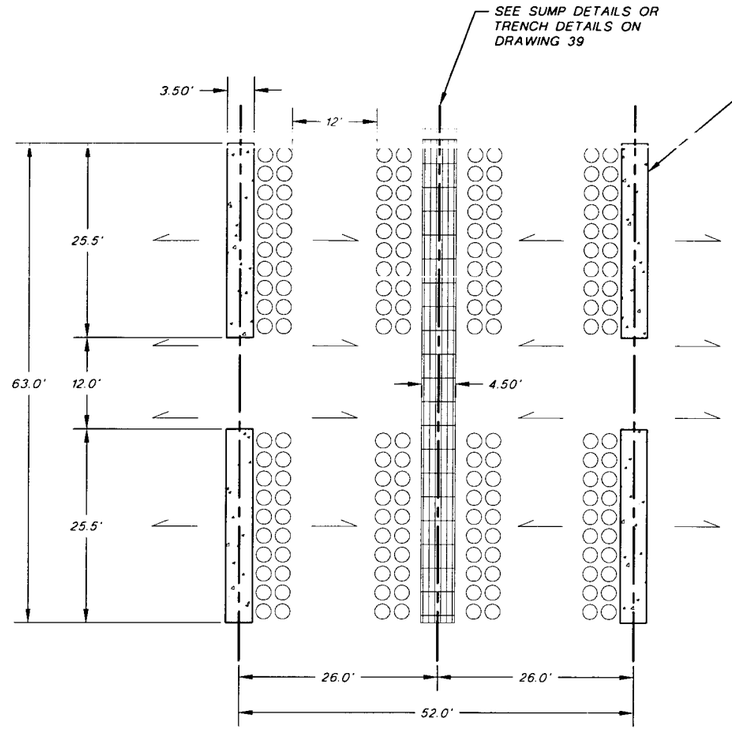

1 37|38 **TYPICAL RCRA CELL DETAIL**
Not To Scale

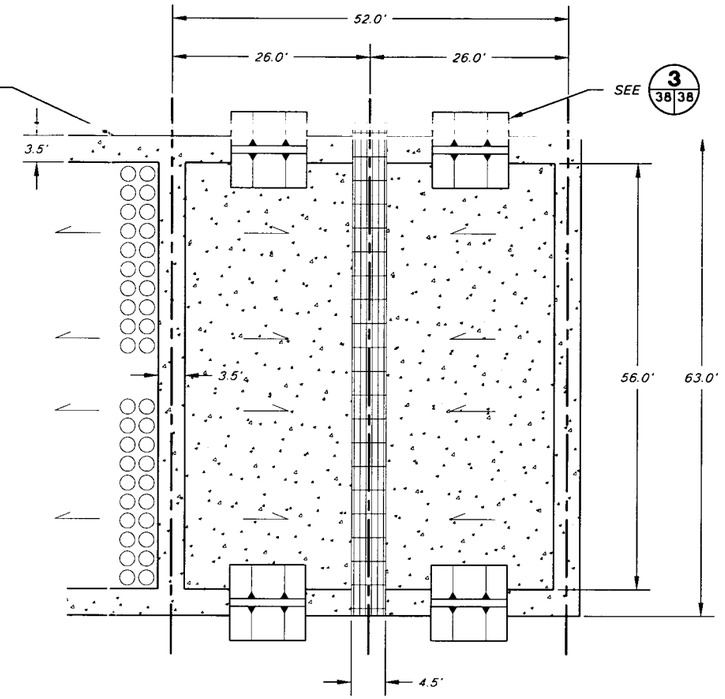

2 37|38 **TYPICAL TSCA CELL DETAIL**
Not To Scale

LEGEND

DRAINAGE FLOW DIRECTION ON TOP OF CONCRETE

CENTERLINE

DRUMS

SCALE
10' 0 10' 20'

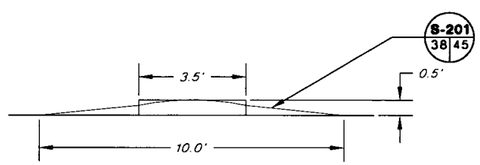

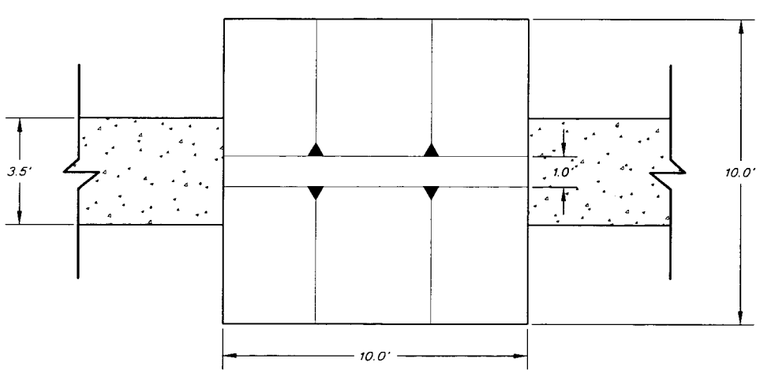

3 37|38 **TYPICAL TSCA CELL ACCESS RAMP DETAIL**
Not To Scale

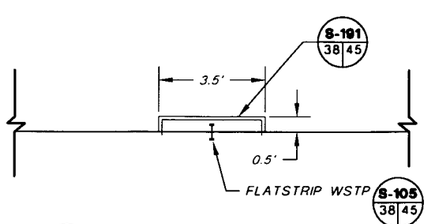

4 37|38 **TYPICAL WALKWAY DETAIL**
Not To Scale

PATRICK G. CORSER
NEW MEXICO
12236
REGISTERED PROFESSIONAL ENGINEER

PROFESSIONAL ENGINEER'S STATEMENT

I, Patrick G. Corser, state that this map was prepared under my supervision and all the information presented hereon is true and correct to the best of my knowledge and information.

11/5/98 — Date

Patrick G. Corser, NM P.E. 12236

Not For Construction

REV. No	REVISIONS	DATE	DESIGN BY	DRAWN BY	REVIEWED AND SIGNED BY
1	NOVEMBER 1998 REVISION	10/30/98	J.Pelicer	T.Smith	P.Corser
0	PART B PERMIT APPLICATION	12/12/97	PGC/JPP	K.Conrath	P.Corser

TRIASSIC PARK
WASTE DISPOSAL FACILITY

DRAWING TITLE:
DRUM HANDLING UNIT DETAILS

TerraMatrix
MONTGOMERY WATSON
Mining Group

Sheet 1 Of 1 Sheets
SCALE: As Shown
DRAWING No. 38

NOTE:
FOR GENERAL NOTES AND LEGEND INFORMATION SEE DRAWING No. 2, "INDEX, LEGEND AND GENERAL NOTES".

PROJECT NUMBER: 602-0200
AutoCAD FILE: GMI.DWG

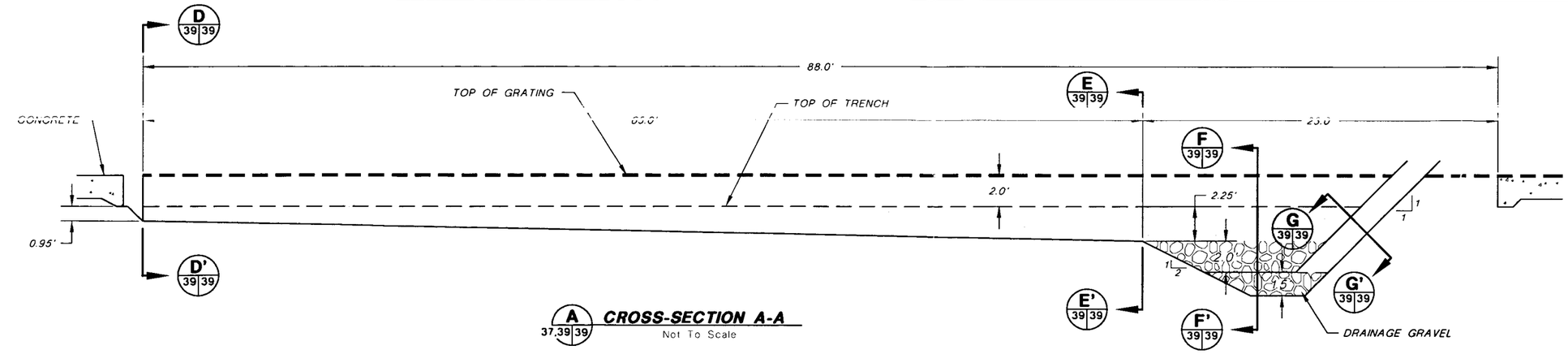

A 37|39|39 CROSS-SECTION A-A
Not To Scale

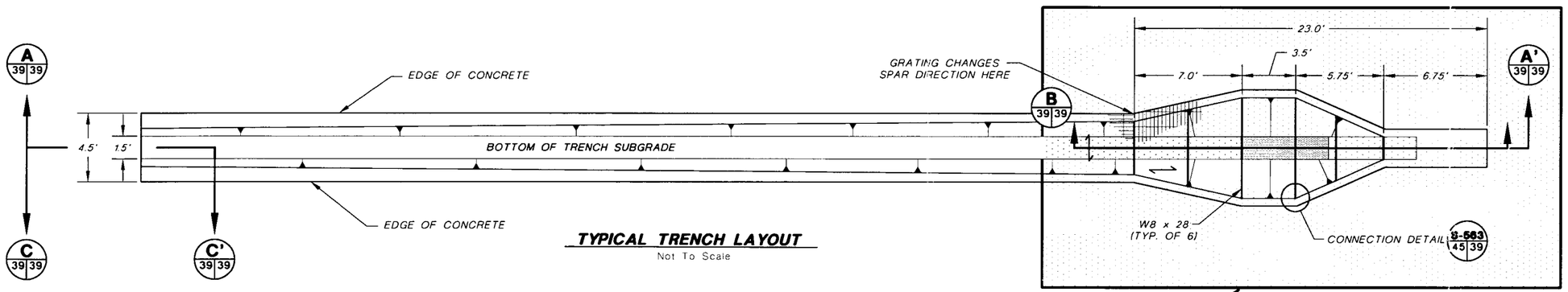

TYPICAL TRENCH LAYOUT
Not To Scale

SCALE
4' 0 4' 8'

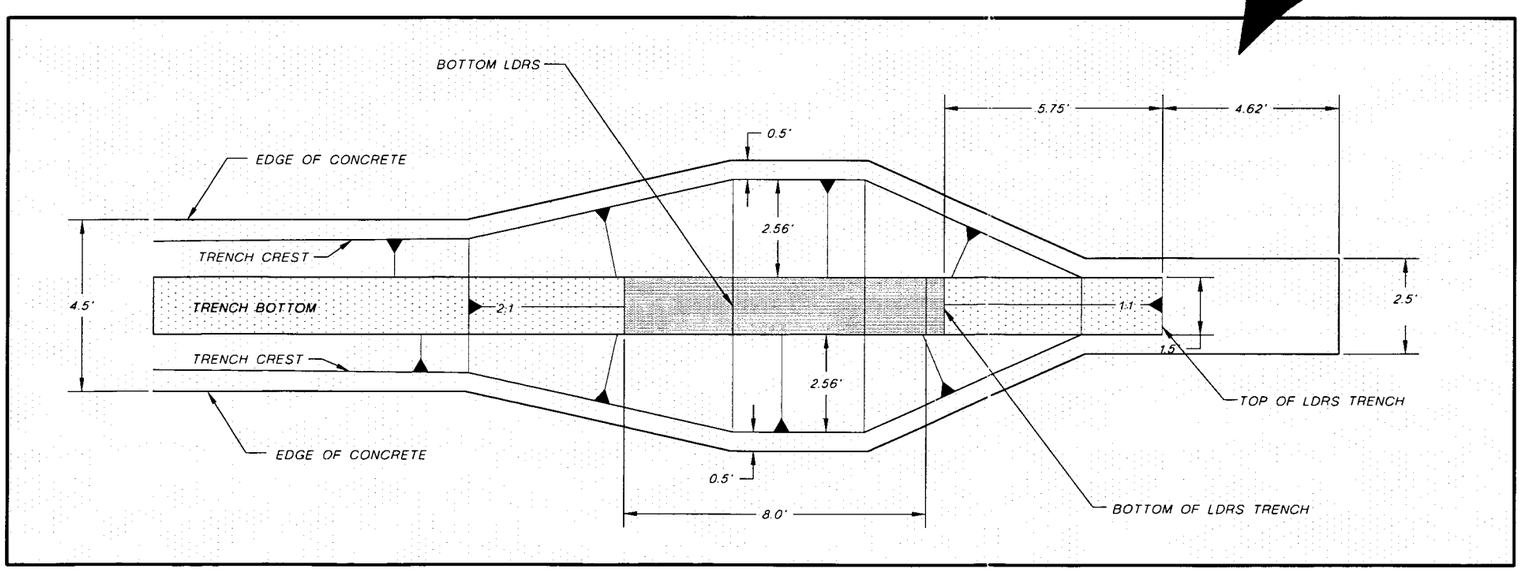

NOTE:
FOR GENERAL NOTES AND LEGEND INFORMATION SEE DRAWING No. 2, "INDEX, LEGEND AND GENERAL NOTES".

PATRICK G. CORSER NEW MEXICO 12236 REGISTERED PROFESSIONAL ENGINEER

PROFESSIONAL ENGINEER'S STATEMENT
I, Patrick G. Corser, state that this map was prepared under my supervision and all the information presented herein is true and correct to the best of my knowledge and information.
11/5/98 PATRICK CORSER
Date Patrick G. Corser, NM P.E. 12236

REV. No	REVISIONS	DATE	DESIGN BY	DRAWN BY	REVIEWED AND SIGNED BY
1	NOVEMBER 1998 REVISION	10/30/98	J.Pelicer	T.Smith	P.Corser
0	PART B PERMIT APPLICATION	12/12/97	PGC/JPP	K.Conrath	P.Corser

TRIASSIC PARK
WASTE DISPOSAL FACILITY

DRAWING TITLE:
DRUM HANDLING UNIT SUMP DETAILS

TerraMatrix
MONTGOMERY WATSON
Mining Group

Sheet 1 Of 2 Sheets
SCALE: As Shown
DRAWING No. 39

PROJECT NUMBER: 602-0200
AutoCAD FILE: TRN-DTL

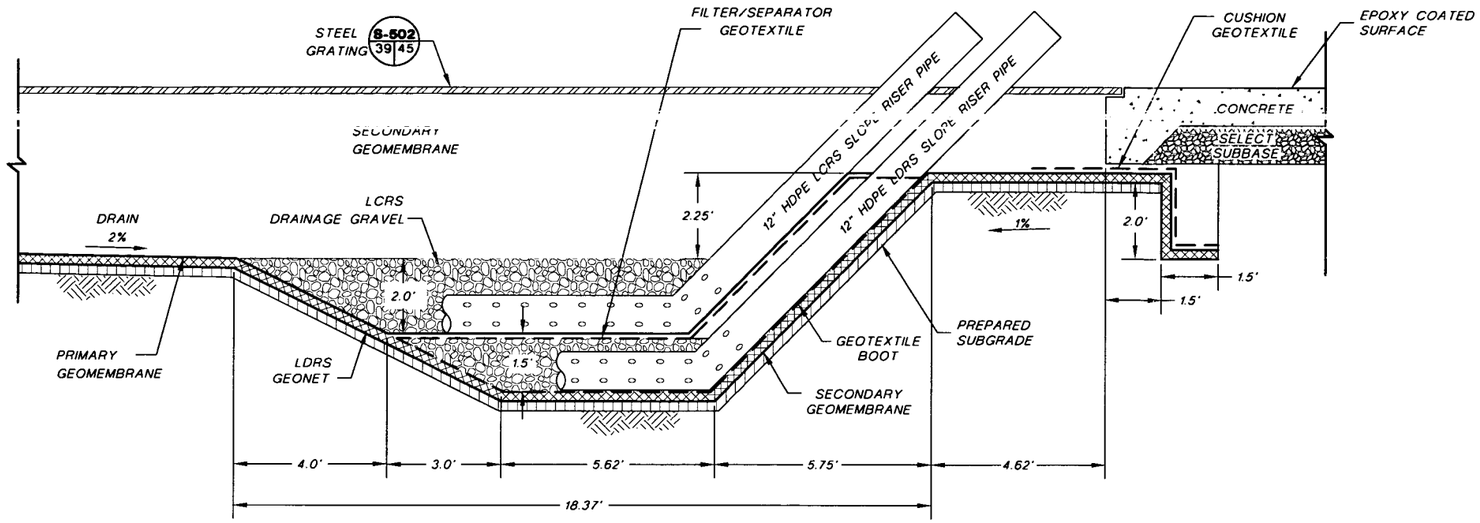

B 39 39 CROSS-SECTION B-B'
Not To Scale

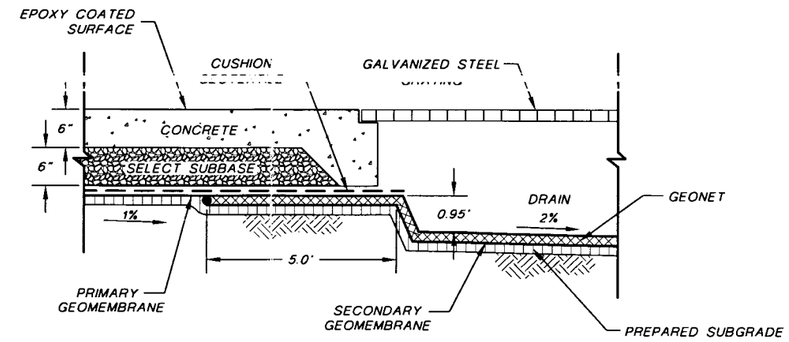

C 39 39 CROSS-SECTION C-C'
Not To Scale

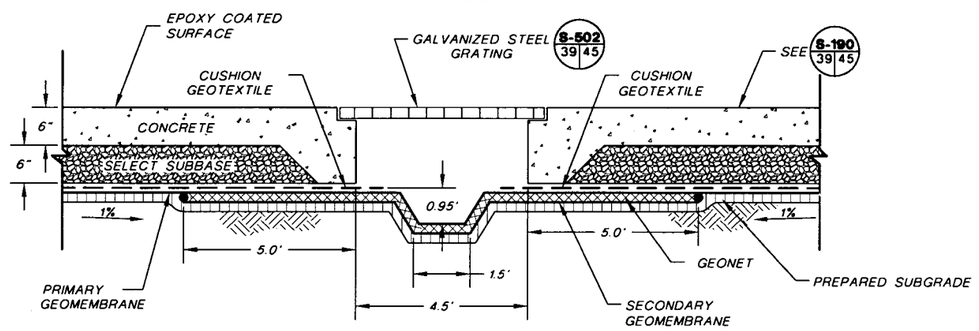

D 39 39 CROSS-SECTION D-D'
Not To Scale

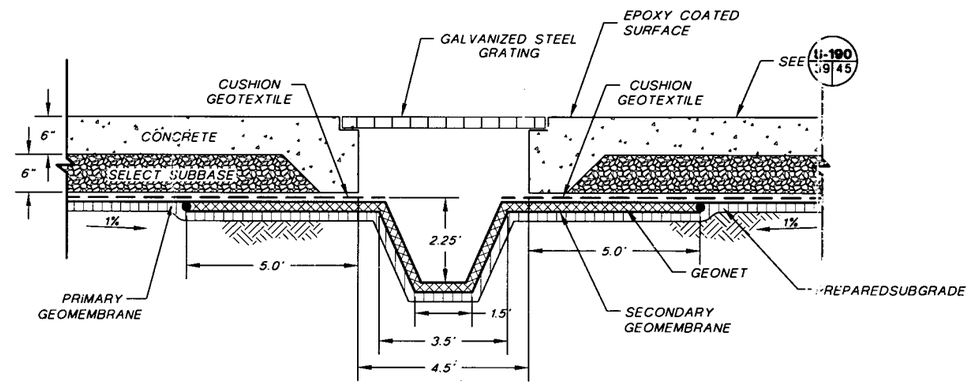

E 39 39 CROSS-SECTION E-E'
Not To Scale

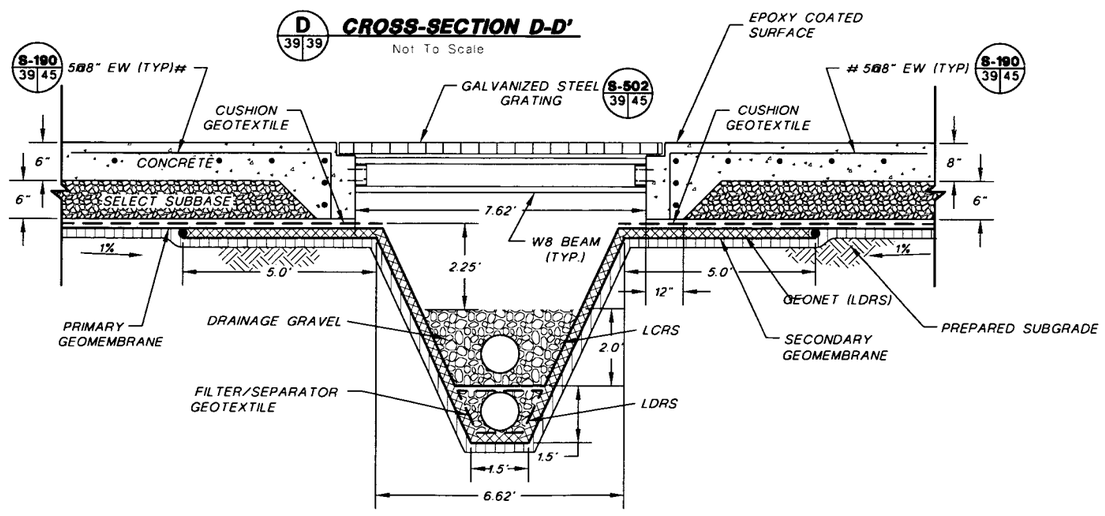

F 39 39 CROSS-SECTION F-F'
Not To Scale

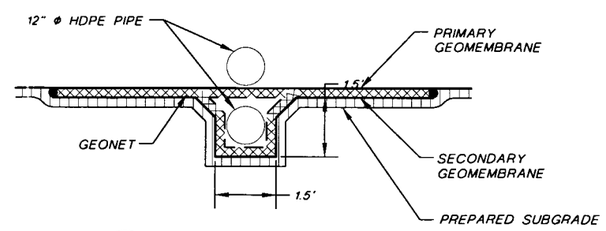

G 39 39 CROSS-SECTION G-G'
Not To Scale

NOTE:
FOR GENERAL NOTES AND LEGEND INFORMATION SEE DRAWING No. 2, "INDEX, LEGEND AND GENERAL NOTES".

PATRICK G. CORSER NEW MEXICO 12236 REGISTERED PROFESSIONAL ENGINEER

PROFESSIONAL ENGINEER'S STATEMENT

I, Patrick G. Corser, state that this map was prepared under my supervision and all the information presented hereon is true and correct to the best of my knowledge and information.

11/5/98 — Patrick G. Corser, NM P.E. 12236
Date

REV No	REVISIONS	DATE	DESIGN BY	DRAWN BY	REVIEWED AND SIGNED BY
1	NOVEMBER 1998 REVISION	10/30/98	J.Pellicer	T.Smith	P.Corser
0	PART B PERMIT APPLICATION	12/12/97	PGC/JPP	K.Conrath	P.Corser

TRIASSIC PARK
WASTE DISPOSAL FACILITY

DRAWING TITLE:
DRUM HANDLING UNIT SUMP DETAILS

TerraMatrix
MONTGOMERY WATSON
Mining Group

Sheet 2 Of 2 Sheets
SCALE: As Shown
DRAWING No. 39

PROJECT NUMBER: 602-0200
AutoCAD FILE: TRN-D1

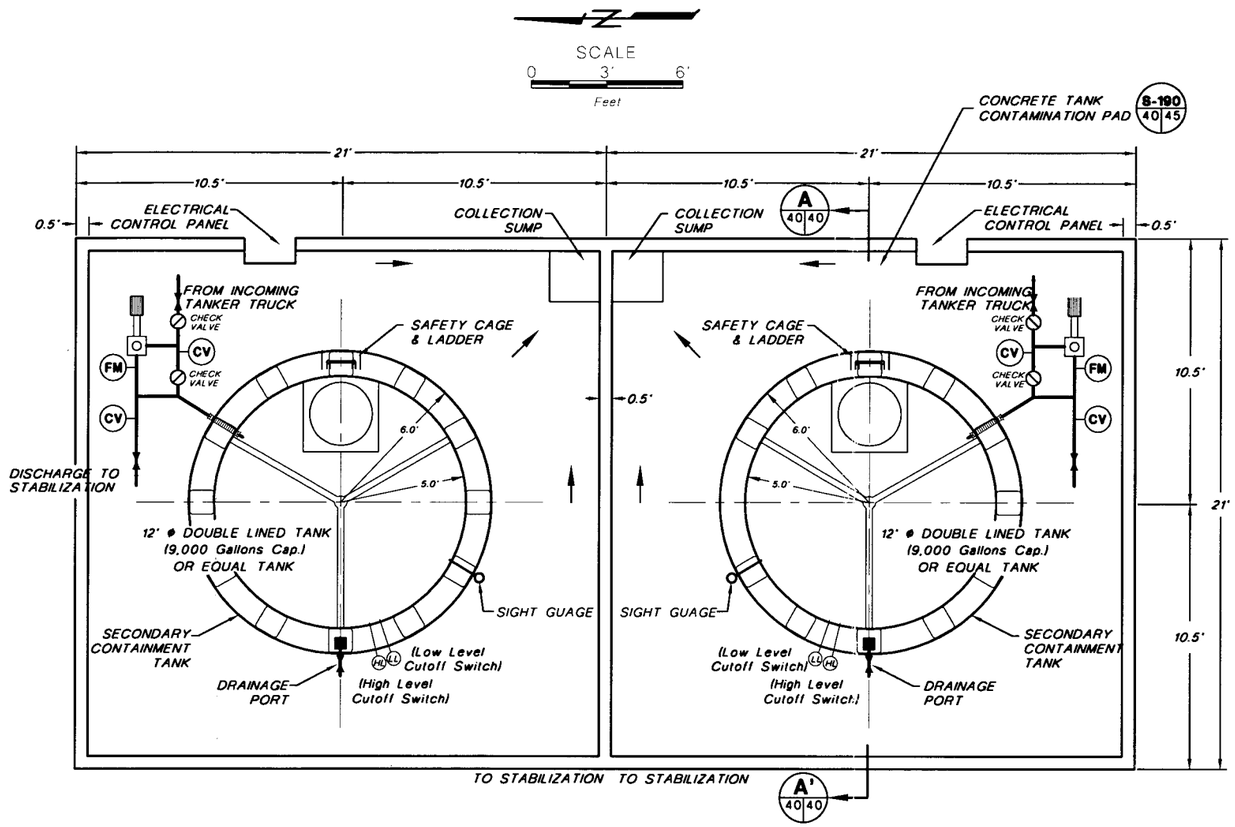

LIQUID WASTE RECEIVING & STORAGE AREA

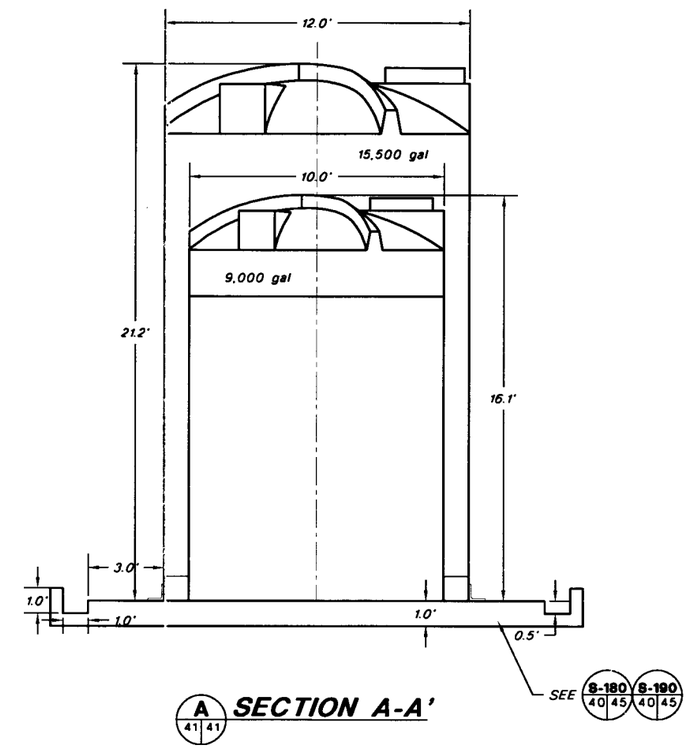

SECTION A-A'

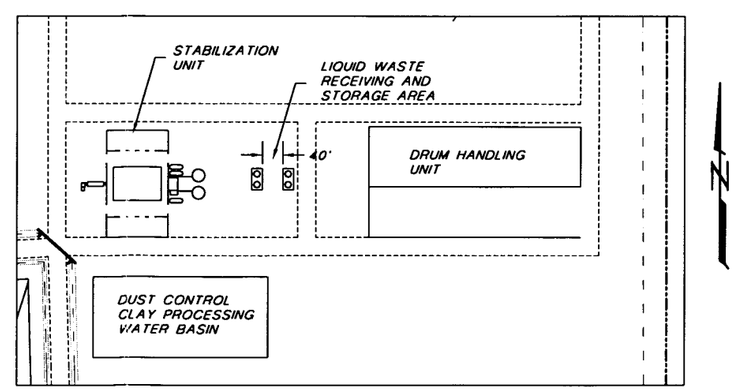

LIQUID WASTE RECEIVING & STORAGE AREA LOCATION

NOTES:
1. FOR GENERAL NOTES AND LEGEND INFORMATION SEE DRAWING No. 2, "INDEX, LEGEND AND GENERAL NOTES".
2. FOR CONCRETE DETAILS SEE DRAWING 45.
3. TWO TANKS WILL BE CONSTRUCTED INITIALLY TO SERVICE SITE EXCAVATIONS. TWO ADDITIONAL TANKS MAY BE ADDED AT A LATER DATE TO ACCOMODATE ANY INCREASES IN LIQUID WASTE VOLUME.

PATRICK G. CORSER NEW MEXICO 12236 REGISTERED PROFESSIONAL ENGINEER

PROFESSIONAL ENGINEER'S STATEMENT
I, Patrick G. Corser, state that this map was prepared under my supervision and all the information presented hereon is true and correct to the best of my knowledge and information.
11/5/98 Patrick Corser
Date Patrick G. Corser, NM P.E. 12236

Not For Construction

REV No	REVISIONS	DATE	DESIGN BY	DRAWN BY	REVIEWED AND SIGNED BY
1	NOVEMBER 1998 REVISION	10/30/98	J.Pelicer	T.Smith	P.Corser
0	PART B PERMIT APPLICATION	12/12/97	PGC/JPP	E.Simonsen	P.Corser

TRIASSIC PARK
WASTE DISPOSAL FACILITY

DRAWING TITLE:
LIQUID WASTE RECEIVING AND STORAGE UNIT LAYOUT

TerraMatrix
MONTGOMERY WATSON
Mining Group

Sheet 1 Of 1 Sheets
SCALE: See Scale Bar
DRAWING No. 40

AutoCAD FILE: GLF-LWM G PROJECT NUMBER: 602-0200

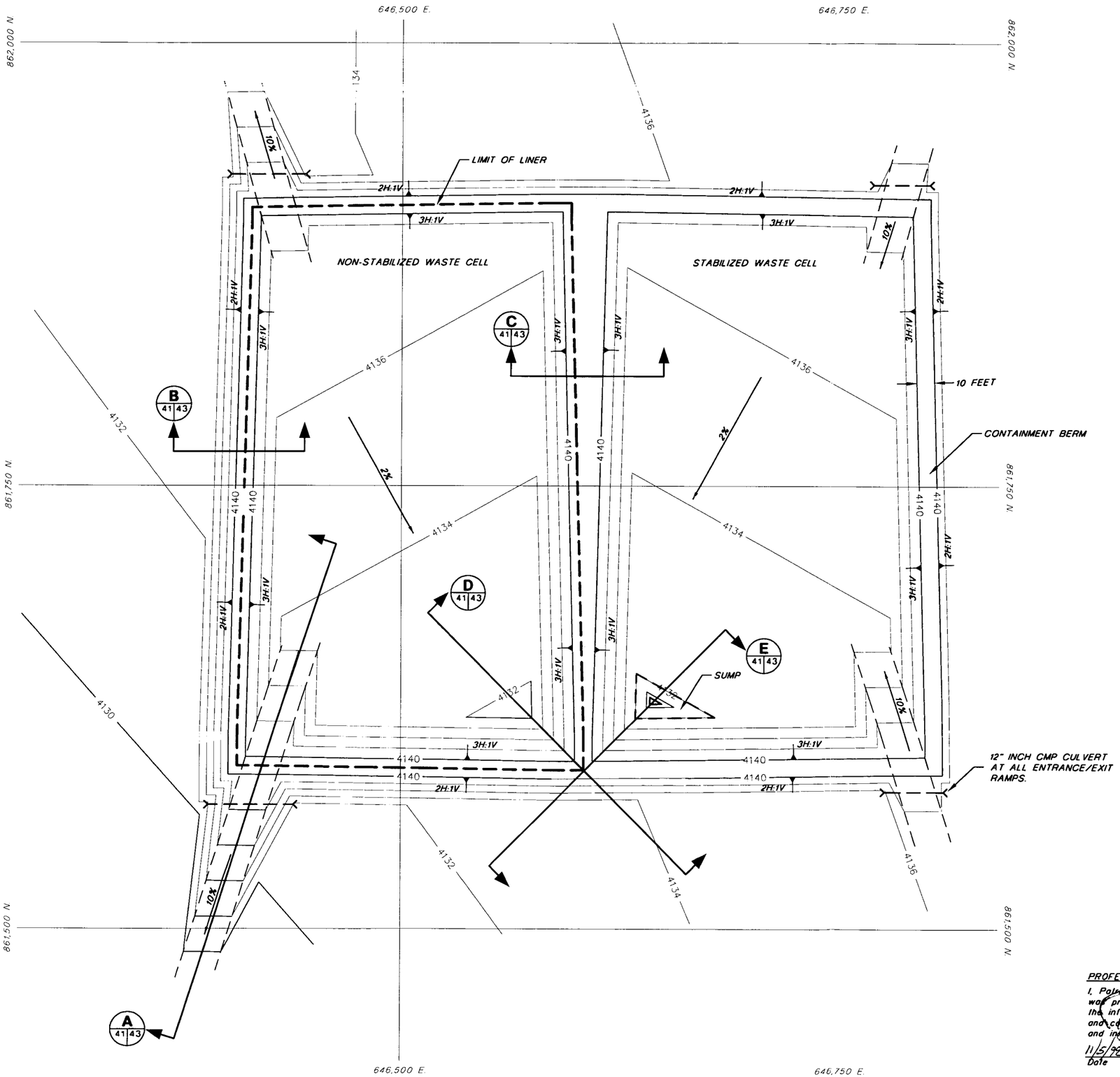

NOTE:
FOR GENERAL NOTES AND LEGEND INFORMATION SEE DRAWING No. 2, "INDEX, LEGEND AND GENERAL NOTES".

SCALE

30' 0 30' 60'

CONTOUR INTERVAL 2 FT.

Not For Construction

REV No.	REVISIONS	DATE	DESIGN BY	DRAWN BY	REVIEWED AND SIGNED BY
1	NOVEMBER 1998 REVISION	10/30/98	J.Pellicer	T.Smith	P.Corser
0	PART B PERMIT APPLICATION	12/12/97	PGC/JPP	T.SMITH	P.CORSER

PATRICK G. CORSER NEW MEXICO 12236 REGISTERED PROFESSIONAL ENGINEER

PROFESSIONAL ENGINEER'S STATEMENT

I, Patrick G. Corser, state that this map was prepared under my supervision and all the information presented hereon is true and correct to the best of my knowledge and information.

11/5/98 — Patrick G. Corser
Date — Patrick G. Corser, NM P.E. 12236

TRIASSIC PARK
WASTE DISPOSAL FACILITY

DRAWING TITLE:
TRUCK ROLL-OFF AREA DRAINAGE SURFACE CONTOURS

TerraMatrix
MONTGOMERY WATSON
Mining Group

Sheet 1 Of 1 Sheets
SCALE: AS NOTED
DRAWING No. 41

AutoCAD FILE: GANDY-1DWG PROJECT NUMBER: 602-0200

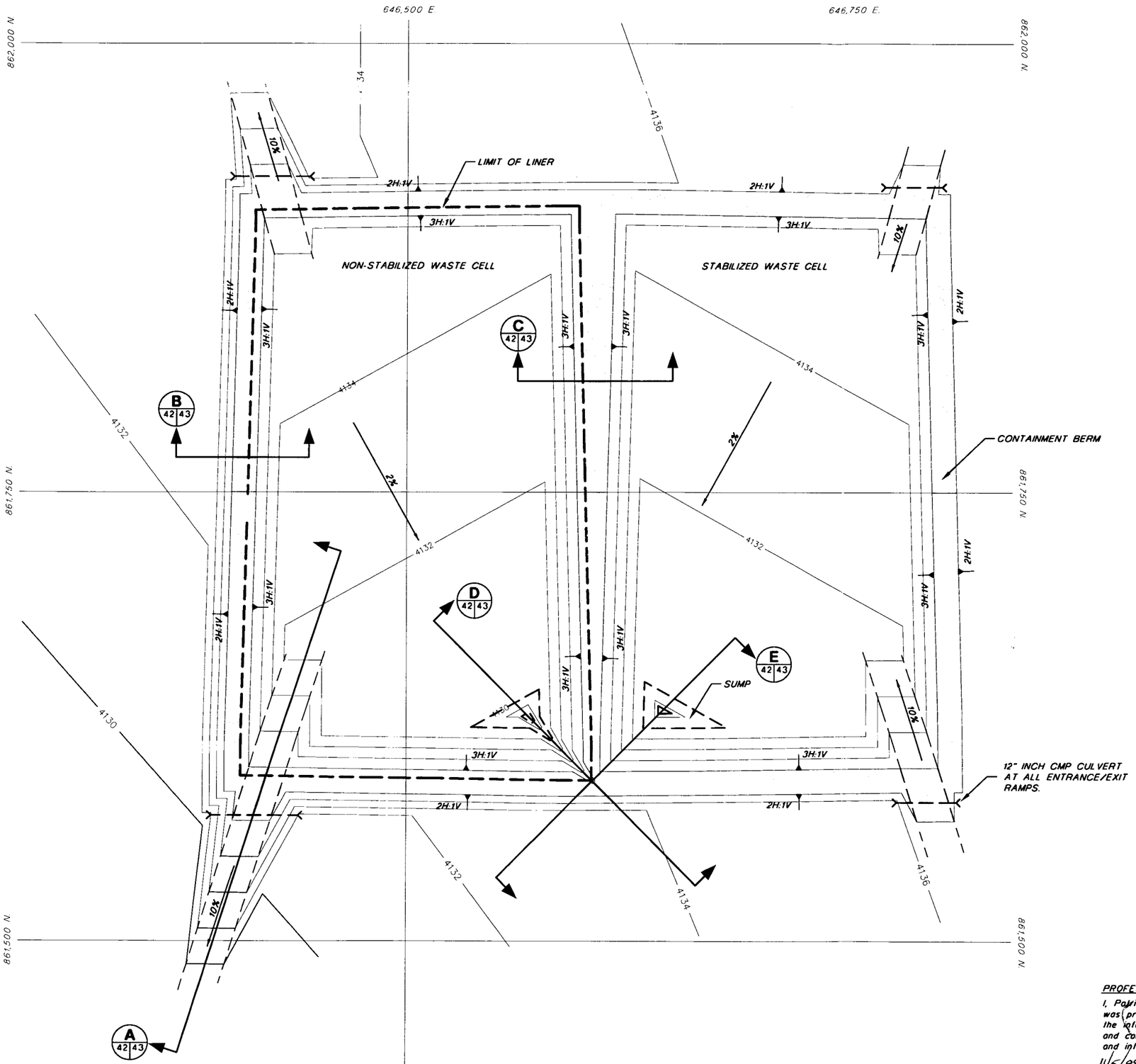

NOTE:
FOR GENERAL NOTES AND LEGEND INFORMATION SEE DRAWING No. 2, "INDEX, LEGEND AND GENERAL NOTES".

SCALE

30' 0 30' 60'

CONTOUR INTERVAL 2 FT.

Not For Construction

REV No	REVISIONS	DATE	DESIGN BY	DRAWN BY	REVIEWED AND SIGNED BY
1	NOVEMBER 1998 REVISION	11/01/98	J.Pellicer	T.Smith	P.Corser
0	PART B PERMIT APPLICATION	12/12/97	PGC/JPP	T.SMITH	P.CORSER

PATRICK G. CORSER NEW MEXICO 12236 REGISTERED PROFESSIONAL ENGINEER

PROFESSIONAL ENGINEER'S STATEMENT

I, Patrick G. Corser, state that this map was prepared under my supervision and all the information presented hereon is true and correct to the best of my knowledge and information.

11/5/98 Patrick Corser

Date — Patrick G. Corser, NM P.E. 12236

TRIASSIC PARK
WASTE DISPOSAL FACILITY

DRAWING TITLE:
TRUCK ROLL-OFF AREA SUBGRADE CONTOURS

TerraMatrix
MONTGOMERY WATSON
Mining Group

Sheet 1 Of 1 Sheets

SCALE: AS NOTED

DRAWING No. 42

AutoCAD FILE: GANDY-R.DWG PROJECT NUMBER: 602-0200

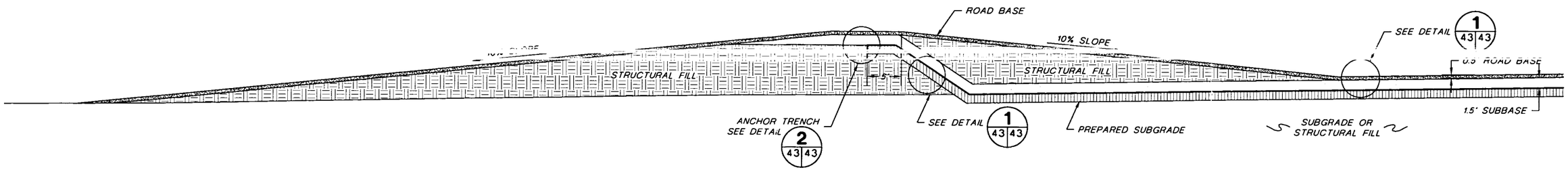

A 41|43 A 42|43 ACCESS ROAD DETAIL

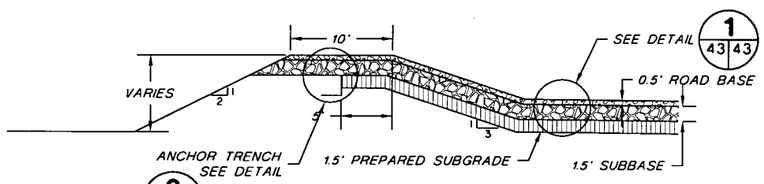

B 41|43 B 42|43 BERM DETAIL

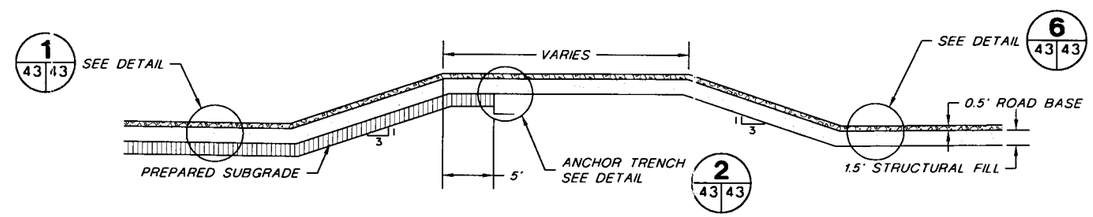

C 41|43 C 42|43 INNER FACILITY BERM DETAIL

SCALE
0 7.5' 15'
Feet

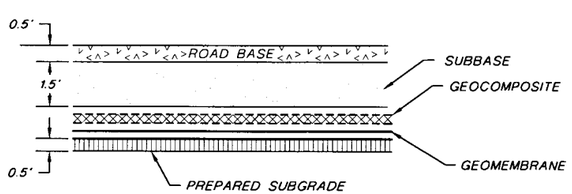

FLOOR AND SLOPE NON-STABILIZED WASTE CELL

1 43|43 LINER & DRAIN CROSS-SECTION

NOT TO SCALE

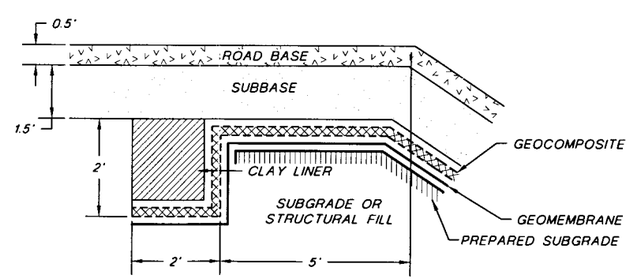

2 43|43 ANCHOR TRENCH DETAIL

NOT TO SCALE

PATRICK G. CORSER NEW MEXICO 12236 REGISTERED PROFESSIONAL ENGINEER

PROFESSIONAL ENGINEER'S STATEMENT

I, Patrick G. Corser, state that this map was prepared under my supervision and all the information presented hereon is true and correct to the best of my knowledge and information.

11/5/98 Date — Patrick G. Corser, NM P.E. 12236

NOTE:
FOR GENERAL NOTES AND LEGEND INFORMATION SEE DRAWING No. 2, "INDEX, LEGEND AND GENERAL NOTES".

Not For Construction

REV. No	REVISIONS	DATE	DESIGN BY	DRAWN BY	REVIEWED AND SIGNED BY
1	NOVEMBER 1998 REVISION	11/01/98	J.Pellicer	T.Smith	P.Corser
0	PART B PERMIT APPLICATION	12/12/97	PGC/JPP	T.Smith	P.Corser

TRIASSIC PARK
WASTE DISPOSAL FACILITY

DRAWING TITLE:
TRUCK ROLL-OFF AREA LINER DETAILS

TerraMatrix
MONTGOMERY WATSON
Mining Group

Sheet 1 Of 2 Sheets
SCALE: As Shown
DRAWING No. 43

AutoCAD FILE: ROLLOF.DG PROJECT NUMBER 602-0200

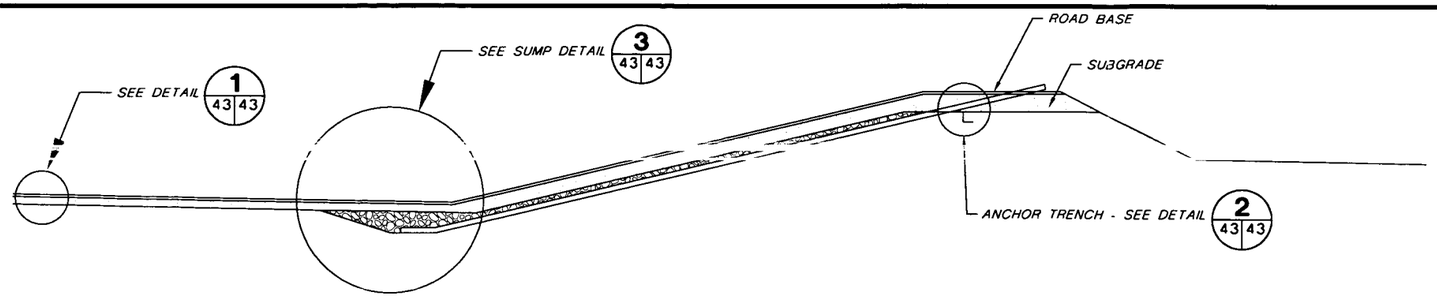

D D 41|43 42|43 CROSS-SECTION D

SCALE
0 7.5' 15'
Feet

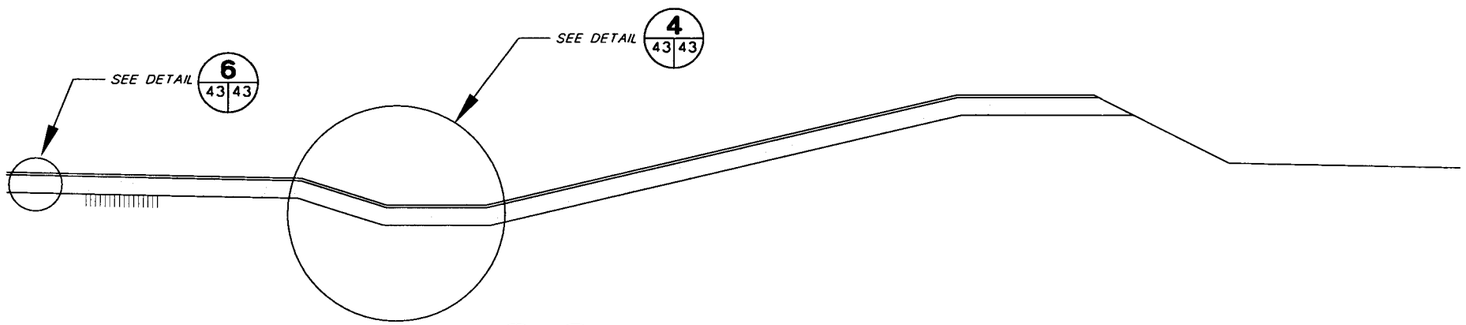

E E 41|43 42|43 CROSS-SECTION E

NOT TO SCALE

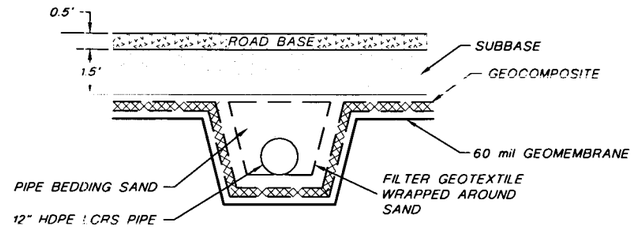

5 43|43 PIPE TRENCH DETAIL

NOT TO SCALE

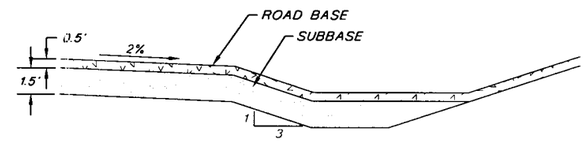

4 43|43 STABILIZED WASTE CELL SUMP

NOT TO SCALE

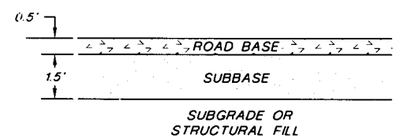

6 43|43 FLOOR AND SLOPE NON-STABILIZED WASTE CELL LINER & DRAIN CROSS-SECTION

NOT TO SCALE

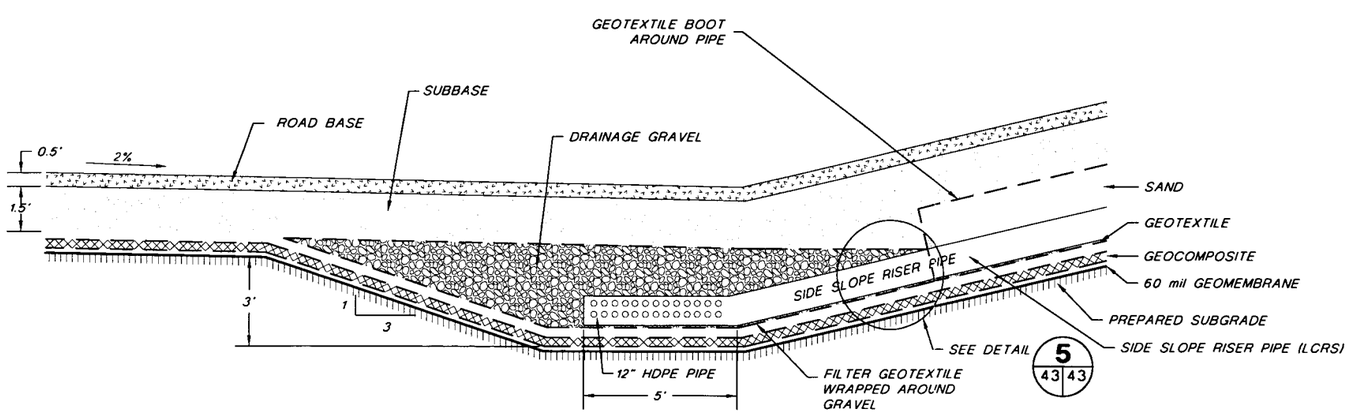

3 43|43 SUMP DETAIL

SCALE
0 2.5' 5'
Feet

NOTE:
FOR GENERAL NOTES AND LEGEND INFORMATION SEE DRAWING No. 2, "INDEX, LEGEND AND GENERAL NOTES".

PROFESSIONAL ENGINEER'S STATEMENT
I, Patrick G. Corser, state that this map was prepared under my supervision and all the information presented hereon is true and correct to the best of my knowledge and information.
11/5/98 Patrick Corser
Date Patrick G. Corser, NM P.E. 12236

PATRICK G. CORSER NEW MEXICO 12236 REGISTERED PROFESSIONAL ENGINEER

Not For Construction

REV. No.	REVISIONS	DATE	DESIGN BY	DRAWN BY	REVIEWED AND SIGNED BY
1	NOVEMBER 1998 REVISION	11/01/98	J.Pellicer	T.Smith	P.Corser
0	PART B PERMIT APPLICATION	12/12/97	PGC/JPP	T.Smith	P.Corser

TRIASSIC PARK WASTE DISPOSAL FACILITY

DRAWING TITLE:
TRUCK ROLL-OFF AREA LINER DETAILS

TerraMatrix
MONTGOMERY WATSON
Mining Group

Sheet 2 Of 2 Sheets
SCALE: As Shown
DRAWING No. 43

AutoCAD FILE: ROLLOF WG PROJECT NUMBER: 602-0200

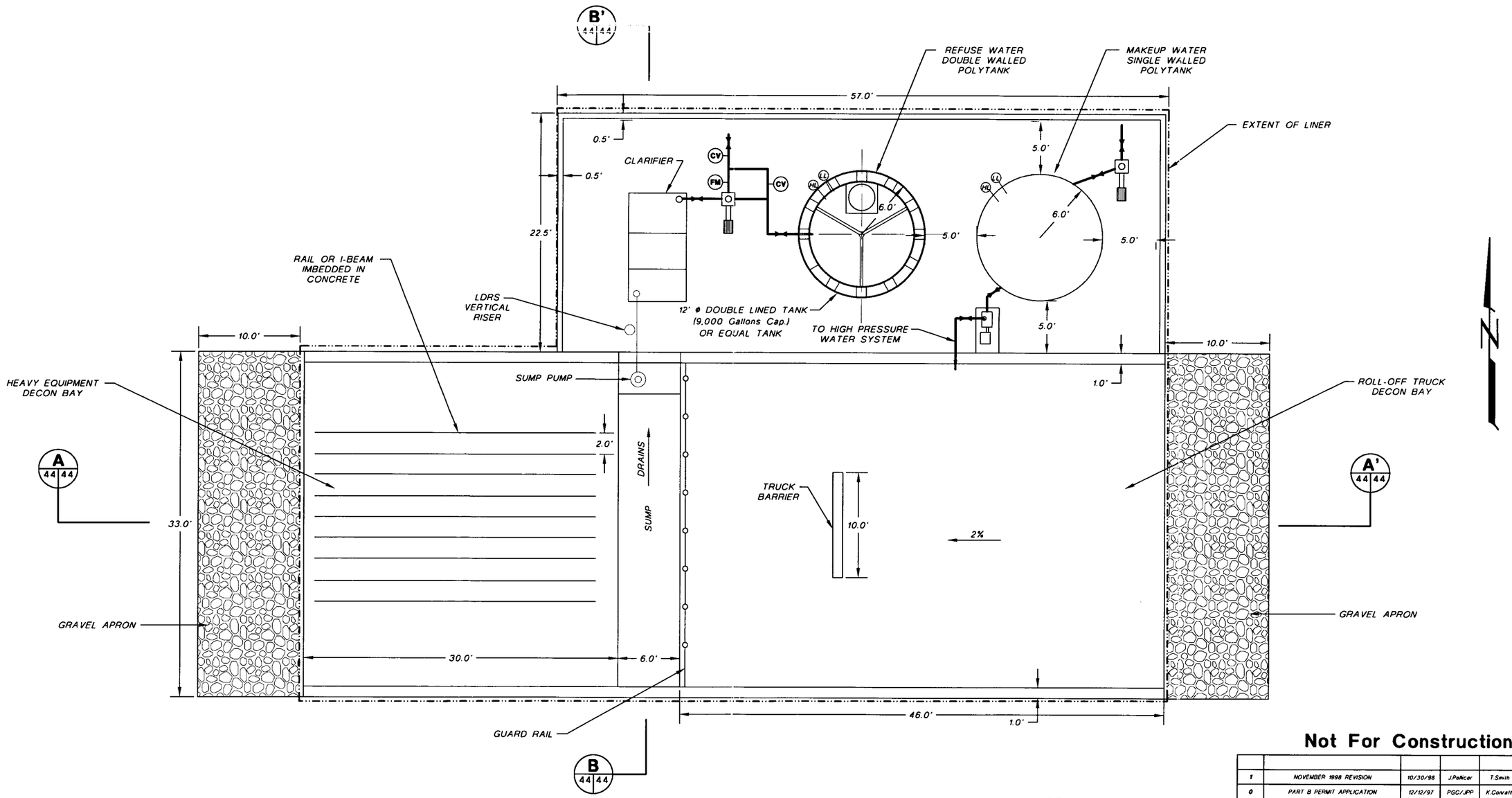

Not For Construction

REV No.	REVISIONS	DATE	DESIGN BY	DRAWN BY	REVIEWED AND SIGNED BY
1	NOVEMBER 1998 REVISION	10/30/98	J.Pelicer	T.Smith	P.Corser
0	PART B PERMIT APPLICATION	12/12/97	PGC/JPP	K.Conrath	P.Corser

SCALE
0 5 10
FEET

PATRICK G. CORSER NEW MEXICO 12236 REGISTERED PROFESSIONAL ENGINEER

PROFESSIONAL ENGINEER'S STATEMENT

I, Patrick G. Corser, state that this map was prepared under my supervision and all the information presented hereon is true and correct to the best of my knowledge and information.

11/5/98 Patrick Corser
Date Patrick G. Corser, NM P.E. 12236

TRIASSIC PARK
WASTE DISPOSAL FACILITY

DRAWING TITLE:
TRUCK WASH LAYOUT AND DETAILS

TerraMatrix
MONTGOMERY WATSON
Mining Group

Sheet 1 Of 2 Sheets
SCALE: Not to Scale
DRAWING No. 44

NOTES:
1. FOR GENERAL NOTES AND LEGEND INFORMATION SEE DRAWING No. 2, "INDEX, LEGEND AND GENERAL NOTES".
2. FOR CONCRETE DETAILS SEE DRAWING 45.

PROJECT NUMBER: 602-0200
AutoCAD FILE: TRKWAS

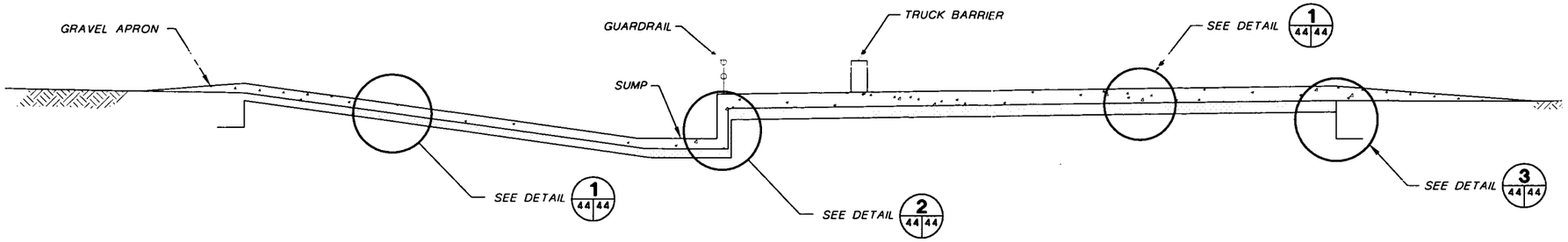

A 44|44 TRUCK WASH CROSS-SECTION

SCALE
0 5 10
FEET

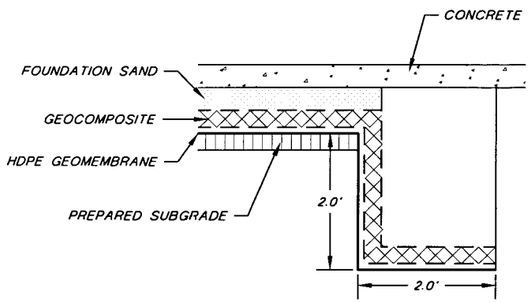

3 44|44 TRUCK WASH ANCHOR TRENCH DETAIL

NOT TO SCALE

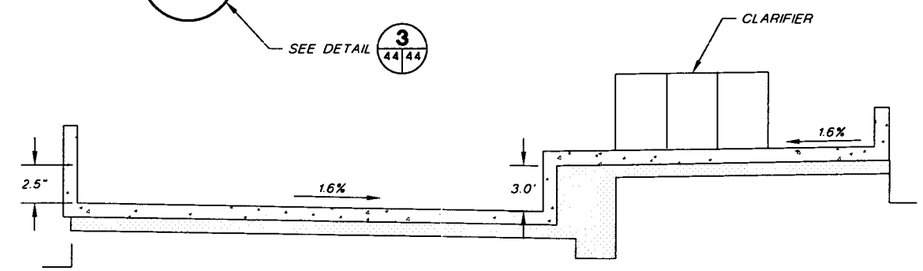

B 44|44 TRUCK WASH SUMP CROSS-SECTION

SCALE
0 5 10
FEET

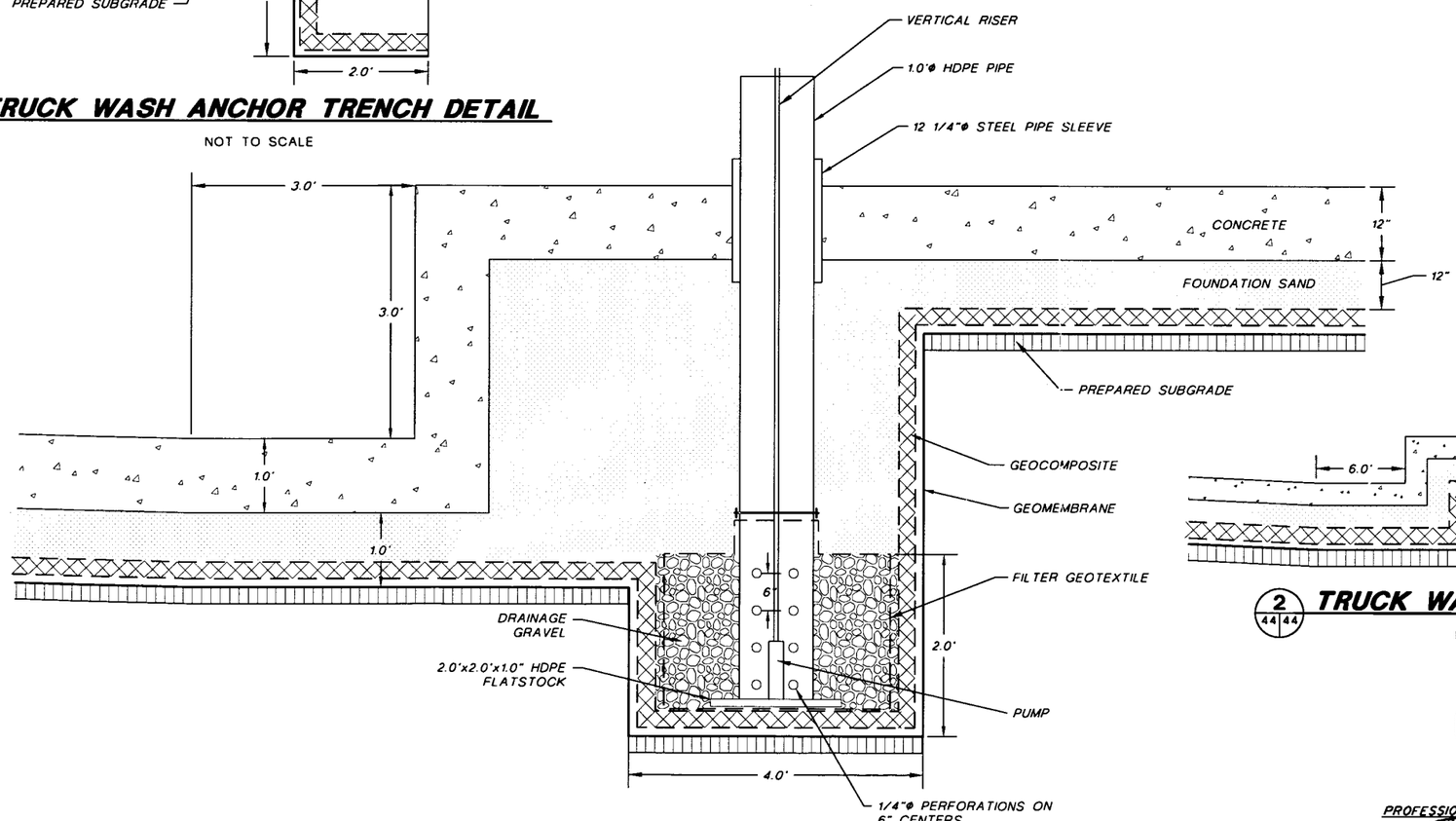

TRUCK WASH LEAK DETECTION SUMP

SCALE
0 1 2
FEET

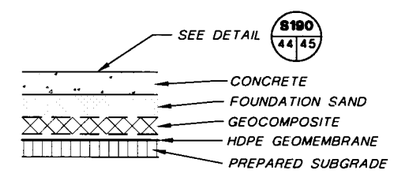

1 44|44 TRUCK WASH LINER DETAIL

NOT TO SCALE

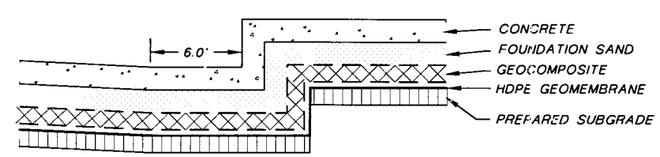

2 44|44 TRUCK WASH SUMP DETAIL

NOT TO SCALE

PATRICK G. CORSER
NEW MEXICO
12236
REGISTERED PROFESSIONAL ENGINEER

PROFESSIONAL ENGINEER'S STATEMENT

I, Patrick G. Corser, state that this map was prepared under my supervision and all the information presented hereon is true and correct, to the best of my knowledge and information.

11/5/98
Date

Patrick G. Corser, NM P.E. 12236

Not For Construction

REV No	REVISIONS	DATE	DESIGN BY	DRAWN BY	REVIEWED AND SIGNED BY
1	NOVEMBER 1998 REVISION	10/30/98	J.Pellicer	T.Smith	P.Corser
0	PART B PERMIT APPLICATION	12/12/97	PGC/JPP	K.Conrath	P.Corser

TRIASSIC PARK WASTE DISPOSAL FACILITY

DRAWING TITLE:
TRUCK WASH LAYOUT AND DETAILS

TerraMatrix
MONTGOMERY WATSON
Mining Group

Sheet 2 Of 2 Sheets
SCALE: Not to Scale
DRAWING No. 44

AutoCAD FILE: TRKWS.DWG PROJECT NUMBER: 602-0200

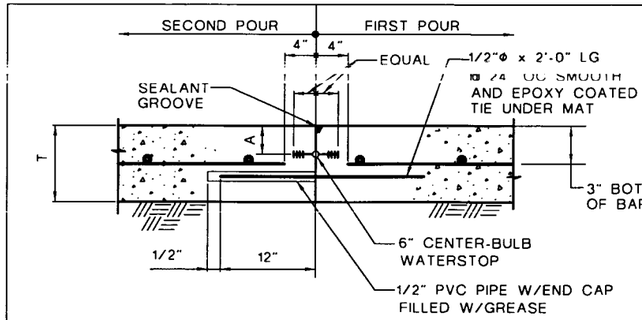

SINGLE MAT REINF - SLEEVE - TYPE JOINT

(TYP CONSTRUCTION JOINT UNLESS OTHERWISE NOTED)

S-110 / 45 WITH WATERSTOP AND SEALANT GROOVE

S-111 / 45 NO WATERSTOP OR SEALANT GROOVE

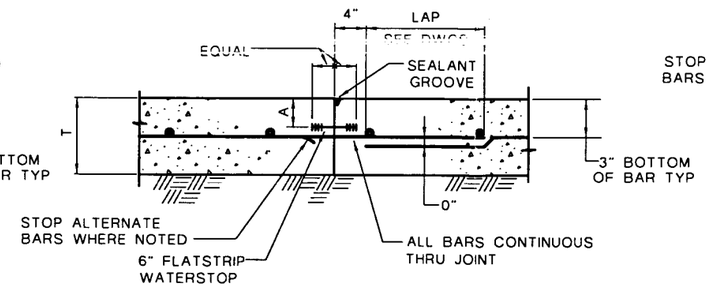

SINGLE MAT REINF - CONTINUOUS THRU JOINT

(ONLY WHEN SPECIFIED ON DRAWINGS)

S-112 / 45 WITH WATERSTOP AND SEALANT GROOVE

S-113 / 45 NO WATERSTOP OR SEALANT GROOVE

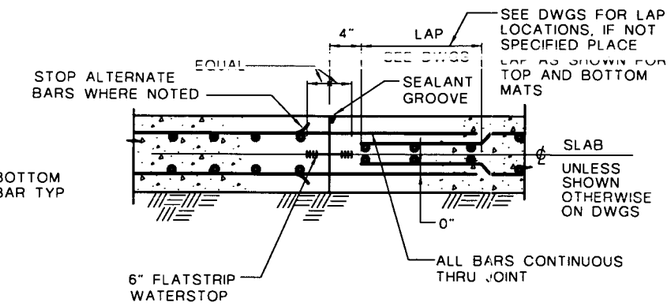

DOUBLE MAT REINF

S-114 / 45 WITH WATERSTOP AND SEALANT GROOVE

S-115 / 45 NO WATERSTOP OR SEALANT GROOVE

T	A
6"	2"
7"	2 1/2"
8"	2 1/2"

NOTES:

1. IN ALL CONSTRUCTION JOINTS WITH WATERSTOPS, APPLY 2 COATS OF BOND BREAKER TO FACE OF JOINT, AVOID COATING WATERSTOP (AND SEALANT GROOVE WHERE USED)
2. WATERSTOPS AND SEALANT GROOVES TO BE PROVIDED IN ALL WATER RETAINING SLABS, SEE DRAWINGS, FOR OTHER LOCATIONS WHERE THEY MAY BE REQUIRED
3. STAGGER SPLICES UNLESS NOTED OTHERWISE

SLAB-ON-GRADE CONSTRUCTION JOINTS

REV 011696

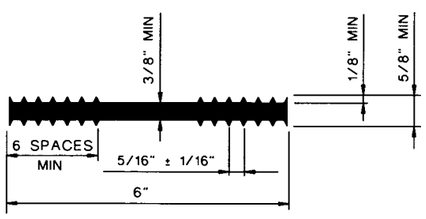

S-105 / 45 6" FLATSTRIP WATERSTOP

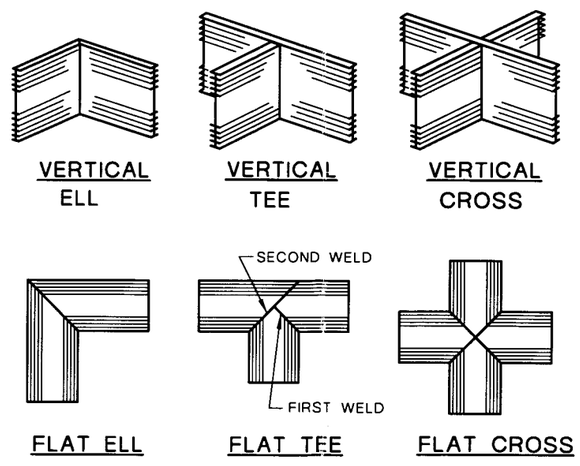

S-108 / 45 PREFABRICATED WATERSTOPS JOINTS

NOTE:
FOR GENERAL NOTES AND LEGEND INFORMATION SEE DRAWING No. 2, "INDEX, LEGEND AND GENERAL NOTES".

PROFESSIONAL ENGINEER'S STATEMENT

I, Patrick G. Corser, state that this map was prepared under my supervision and all the information presented hereon is true and correct to the best of my knowledge and information.

11/5/98 Patrick G. Corser
Date Patrick G. Corser, NM P.E. 12236

PATRICK G. CORSER NEW MEXICO 12236 REGISTERED PROFESSIONAL ENGINEER

DETAIL/SECTION NUMBER
DRAWING No. WHERE DETAIL/SECTION IS REFERENCED
DRAWING No. WHERE DETAIL/SECTION IS SHOWN

REV No	REVISIONS	DATE	DESIGN BY	DRAWN BY	REVIEWED AND SIGNED BY
0	PART B PERMIT APPLICATION	12/12/97	PGC/JPP	J.BEVER	P.CORSER

TRIASSIC PARK
WASTE DISPOSAL FACILITY

DRAWING TITLE:
CONCRETE AND GRATING DETAILS

TerraMatrix
MONTGOMERY WATSON
Mining Group

Sheet 1 Of 5 Sheets
SCALE: AS NOTED
DRAWING No. 45

AutoCAD FILE: CONC-Detail.DWG PROJECT NUMBER 602-0200

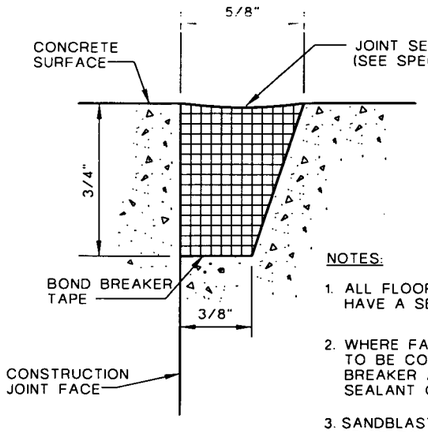

NOTES:

1. ALL FLOOR JOINTS SHALL HAVE A SEALANT GROOVE
2. WHERE FACE OF JOINT IS TO BE COATED WITH BOND BREAKER AVOID COATING SEALANT GROOVE
3. SANDBLASTING REQUIRED PRIOR TO APPLICATION OF PRIMER
4. USE BONDBREAKER TAPE ONLY ON SLIP DOWEL JOINTS

S-131 / 45 SEALANT GROOVE

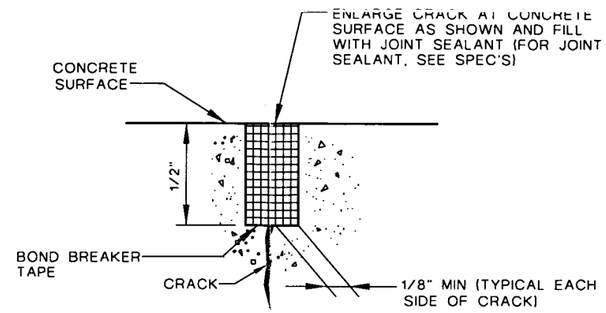

NOTE:

PRIOR TO USE, STRUCTURES SHALL HAVE ALL CRACKS REPAIRED AS SHOWN IN THIS DETAIL

S-132 / 45 CONCRETE CRACK REPAIR

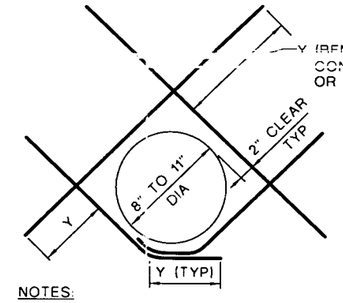

BAR SIZE	Y GRADE 60
No.4	15"
No.5	21"
No.6	24"
No.7	27"
No.8	36"
No.9	42"

NOTES:

1. CUT NORMAL REINFORCEMENT 2" CLEAR OF OPENING
2. DIAGONAL BARS TO BE PLACED:
   A) AT CENTERLINE OF WALL OR SLAB WHERE ONE LAYER OF REINFORCEMENT IS PROVIDED
   B) AT EACH FACE OF WALL OR SLAB WHERE TWO LAYERS OF REINFORCEMENT ARE PROVIDED
3. UNLESS OTHERWISE NOTED, SIZE OF DIAGONAL BARS SHALL BE THE SIZE OF THE LARGEST NORMAL REINFORCING BAR CUT
4. THIS DETAIL TO BE USED ONLY WHEN CALLED FOR ON THE DRAWINGS OR WHEN NO OTHER DETAIL IS SPECIFIED

S-142 / 45 DIAGONAL REINFORCEMENT AT CIRCULAR OPENINGS (8" - 11" DIA)

NOTE:
FOR GENERAL NOTES AND LEGEND INFORMATION SEE DRAWING No. 2, "INDEX, LEGEND AND GENERAL NOTES".

PATRICK G. CORSER NEW MEXICO 12236 REGISTERED PROFESSIONAL ENGINEER

PROFESSIONAL ENGINEER'S STATEMENT

I, Patrick G. Corser, state that this map was prepared under my supervision and all the information presented hereon is true and correct to the best of my knowledge and information.

11/5/98 Date — Patrick G. Corser, NM P.E. 12236

DETAIL/SECTION NUMBER (A / 5 6)
DRAWING No. WHERE DETAIL/SECTION IS REFERENCED
DRAWING No. WHERE DETAIL/SECTION IS SHOWN

REV No	REVISIONS	DATE	DESIGN BY	DRAWN BY	REVIEWED AND SIGNED BY
0	PART B PERMIT APPLICATION	12/12/97	PGC/JPP	J.BEVER	P.CORSER

TRIASSIC PARK
WASTE DISPOSAL FACILITY

DRAWING TITLE:
CONCRETE AND GRATING DETAILS

TerraMatrix
MONTGOMERY WATSON
Mining Group

Sheet 2 Of 5 Sheets
SCALE: AS NOTED
DRAWING No. 45

AutoCAD FILE: CONC_B.DWG PROJECT NUMBER: 602-0200

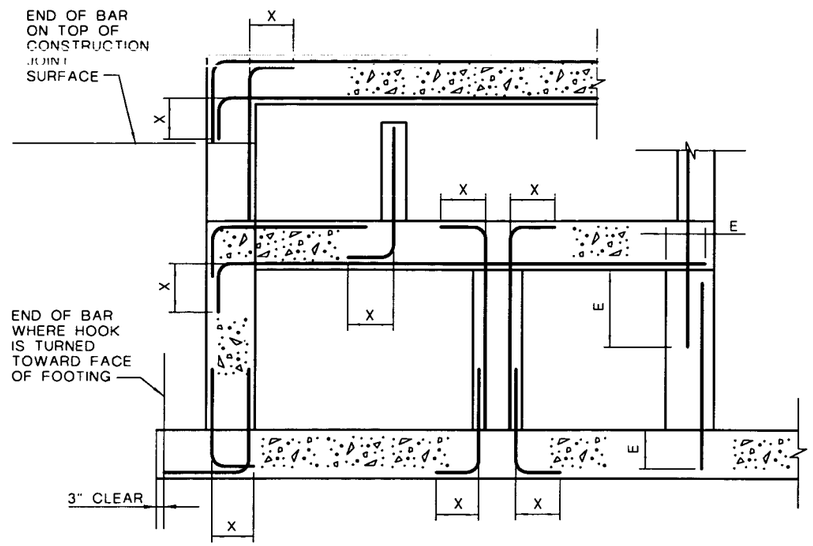

SECTION

LENGTH (INCHES)			
BAR SIZE	HOOK X	LAP	EMBEDMENT E
No.3	6"	18"	12"
No.4	8"	18"	14"
No.5	10"	23"	18"
No.6	12"	28"	22"
No.7	14"	33"	25"
No.8	16"	SEE TABLE BELOW	SEE TABLE BELOW
No.9	19"		
No.10	22"		
No.11	24"		

LENGTH (INCHES)						
REBAR SIZE	FOR 1" TO < 2" CONCRETE COVER		FOR 2" TO < 3" CONCRETE COVER		FOR 3" AND LARGER CONCRETE COVER	
	REBAR SPACING (CENTER TO CENTER)		REBAR SPACING (CENTER TO CENTER)		REBAR SPACING (CENTER TO CENTER)	
	< 8"	≥ 8"	< 8"	≥ 8"	< 8"	≥ 8"
LAP						
No.8	62"	62"	37"	37"	37"	37"
No.9	99"	79"	69"	55"	49"	42"
No.10	125"	100"	88"	70"	63"	50"
No.11	154"	123"	108"	86"	77"	62"
EMBEDMENT E						
No.8	48"	48"	29"	29"	29"	29"
No.9	77"	61"	54"	43"	38"	33"
No.10	97"	77"	68"	54"	49"	39"
No.11	119"	95"	84"	67"	60"	48"

NOTES:

1. USE LAP LENGTHS AS DETERMINED FROM THESE TABLES UNLESS SHOWN OTHERWISE
2. THE TABLES SHOWN ARE FOR f'C=4000 PSI AND fy=60,000 PSI
3. MULTIPLY THE LAP & E SHOWN IN THESE TABLES BY 1.3 FOR WALL HORIZONTAL REBARS AND SLAB BARS WITH 12" OR MORE FRESH CONCRETE UNDERNEATH
4. WHEN BARS OF DIFFERENT SIZE ARE LAP SPLICED, LAP LENGTH SHALL BE THE LARGER OF:
   EMBEDMENT LENGTH OF LARGER BAR
   LAP LENGTH OF SMALLER BAR
5. UNLESS NOTED OTHERWISE USE REBAR COUPLERS FOR SPLICES OF No.11 AND LARGER BARS
6. ALL DOWEL BARS SHALL EXTEND AN EMBEDMENT LENGTH E INTO ANOTHER MEMBER OR ACROSS A CONSTRUCTION JOINT UNLESS SHOWN TO SPLICE WITH OTHER BARS OR TO EXTEND TO THE FAR FACE OF THE MEMBER AND END WITH A STANDARD HOOK

S-143 / - / 45 STANDARD 90° BAR HOOKS, EMBEDMENT LENGTHS AND LAP LENGTHS

UNLESS OTHERWISE NOTED ON DRAWINGS

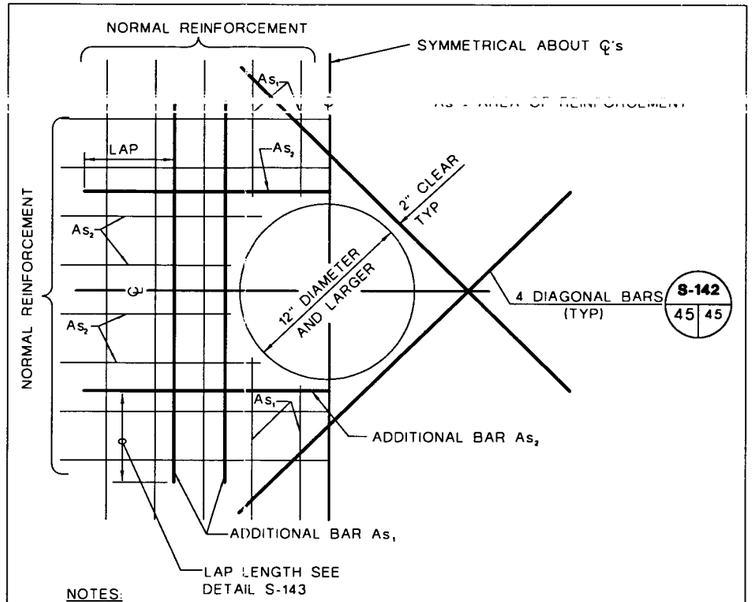

NOTES:

1. CUT NORMAL REINFORCEMENT AT OPENINGS:
   As1 AND As2 = 1/2 AREA OF CUT BARS TO BE ADDED ON EACH SIDE OF OPENING
2. ADDITIONAL BARS As1 AND As2 TO BE PLACED:
   A) AT CENTERLINE OF WALLS OR SLABS WHERE ONE LAYER OF REINFORCEMENT IS PROVIDED
   B) AT EACH FACE OF WALLS OR SLABS WHERE TWO LAYERS OF REINFORCEMENT ARE PROVIDED
3. INCREASE SIZE OF ADDITIONAL BARS AS NEEDED TO FIT WITHIN A DISTANCE OF 2 X WALL/SLAB THICKNESS FROM OPENING, PROVIDE 2" MIN CLEAR BETWEEN BARS
4. THIS DETAIL TO BE USED ONLY WHEN NO OTHER DETAIL IS INDICATED ON THE DRAWINGS
5. WHERE A SLAB OR INTERSECTING WALL CONNECTS WITHIN ONE WALL THICKNESS OF THE OPENING, ADDITIONAL BARS ON THAT SIDE MAY BE OMITTED

S-144 / - / 45 ADDITIONAL REINFORCEMENT AT CIRCULAR OPENINGS (12" DIA OR LARGER)

NOTE:
FOR GENERAL NOTES AND LEGEND INFORMATION SEE DRAWING No. 2, "INDEX, LEGEND AND GENERAL NOTES".

A / 6 / 6
DETAIL/SECTION NUMBER
DRAWING No. WHERE DETAIL/SECTION IS REFERENCED
DRAWING No. WHERE DETAIL/SECTION IS SHOWN

PATRICK G. CORSER NEW MEXICO 12236 REGISTERED PROFESSIONAL ENGINEER

PROFESSIONAL ENGINEER'S STATEMENT

I, Patrick G. Corser, state that this map was prepared under my supervision and all the information presented hereon is true and correct to the best of my knowledge and information.

11/5/98 *Patrick G. Corser, NM P.E. 12236*
Date

REV. No	REVISIONS	DATE	DESIGN BY	DRAWN BY	REVIEWED AND SIGNED BY
0	PART B PERMIT APPLICATION	12/12/97	PGC/JPP	J.BEVER	P.CORSER

TRIASSIC PARK
WASTE DISPOSAL FACILITY

DRAWING TITLE:
CONCRETE AND GRATING DETAILS

TerraMatrix MONTGOMERY WATSON Mining Group

Sheet 3 Of 5 Sheets
SCALE: AS NOTED
DRAWING No. 45

AutoCAD FILE: CONC-2.DWG PROJECT NUMBER: 602-0200

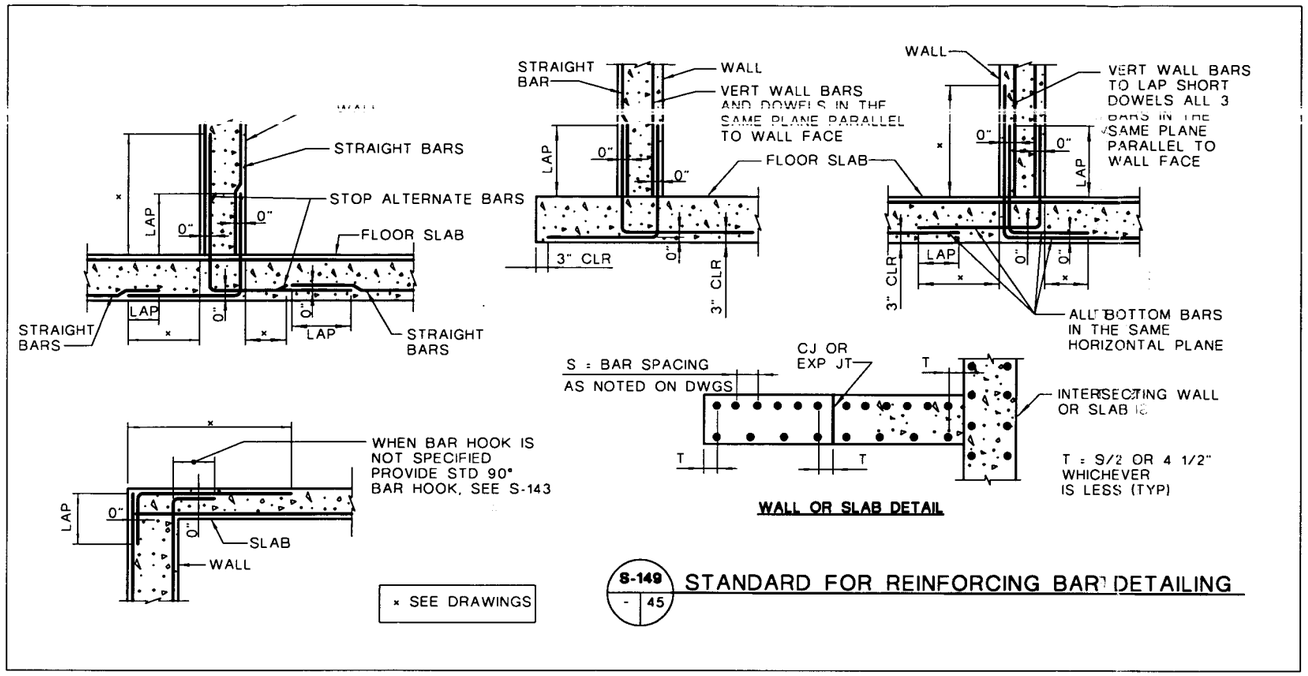

S-149 / 45 STANDARD FOR REINFORCING BAR DETAILING

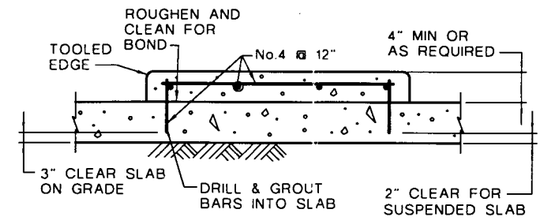

S-191 / 45 HOUSEKEEPING PAD

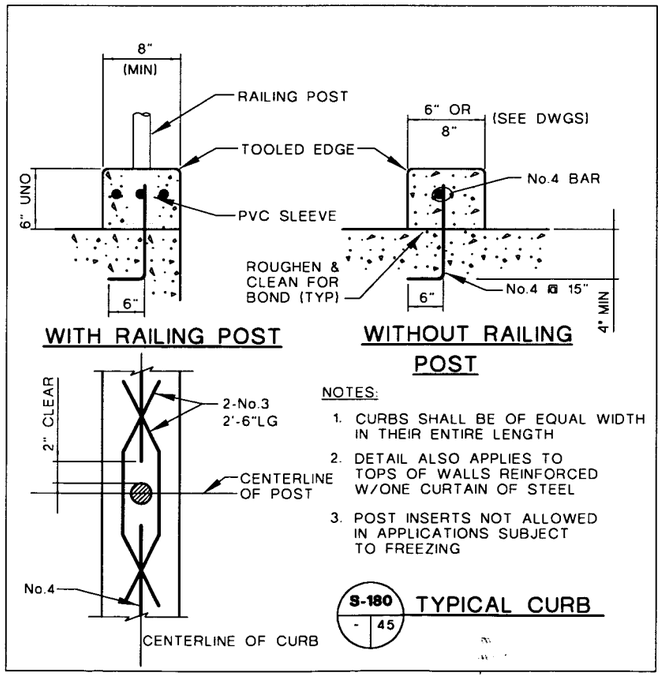

NOTES:

1. CURBS SHALL BE OF EQUAL WIDTH IN THEIR ENTIRE LENGTH
2. DETAIL ALSO APPLIES TO TOPS OF WALLS REINFORCED W/ONE CURTAIN OF STEEL
3. POST INSERTS NOT ALLOWED IN APPLICATIONS SUBJECT TO FREEZING

S-180 / 45 TYPICAL CURB

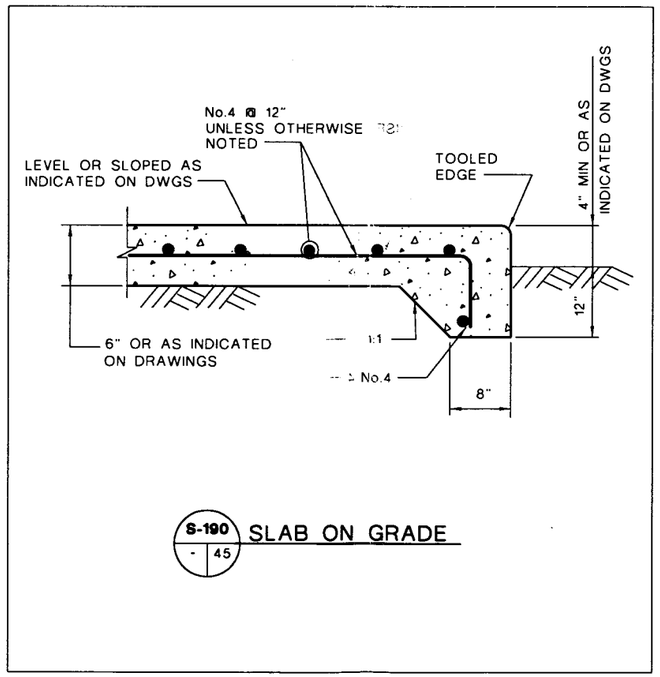

S-190 / 45 SLAB ON GRADE

NOTE:
FOR GENERAL NOTES AND LEGEND INFORMATION SEE DRAWING No. 2, "INDEX, LEGEND AND GENERAL NOTES".

PROFESSIONAL ENGINEER'S STATEMENT

I, Patrick G. Corser, state that this map was prepared under my supervision and all the information presented hereon is true and correct to the best of my knowledge and information.

11/5/98 — Patrick G. Corser, NM P.E. 12236
Date

PATRICK G. CORSER — NEW MEXICO — 12236 — REGISTERED PROFESSIONAL ENGINEER

DETAIL/SECTION NUMBER — A / 6 6
DRAWING No. WHERE DETAIL/SECTION IS REFERENCED
DRAWING No. WHERE DETAIL/SECTION IS SHOWN

REV No	REVISIONS	DATE	DESIGN BY	DRAWN BY	REVIEWED AND SIGNED BY
0	PART B PERMIT APPLICATION	12/12/97	PGC/JPP	J.BEVER	P.CORSER

TRIASSIC PARK
WASTE DISPOSAL FACILITY

DRAWING TITLE:
CONCRETE AND GRATING DETAILS

TerraMatrix
MONTGOMERY WATSON
Mining Group

Sheet 4 Of 5 Sheets
SCALE: AS NOTED
DRAWING No. 45

AutoCAD FILE: CONC_1.DWG PROJECT NUMBER: 602-0200

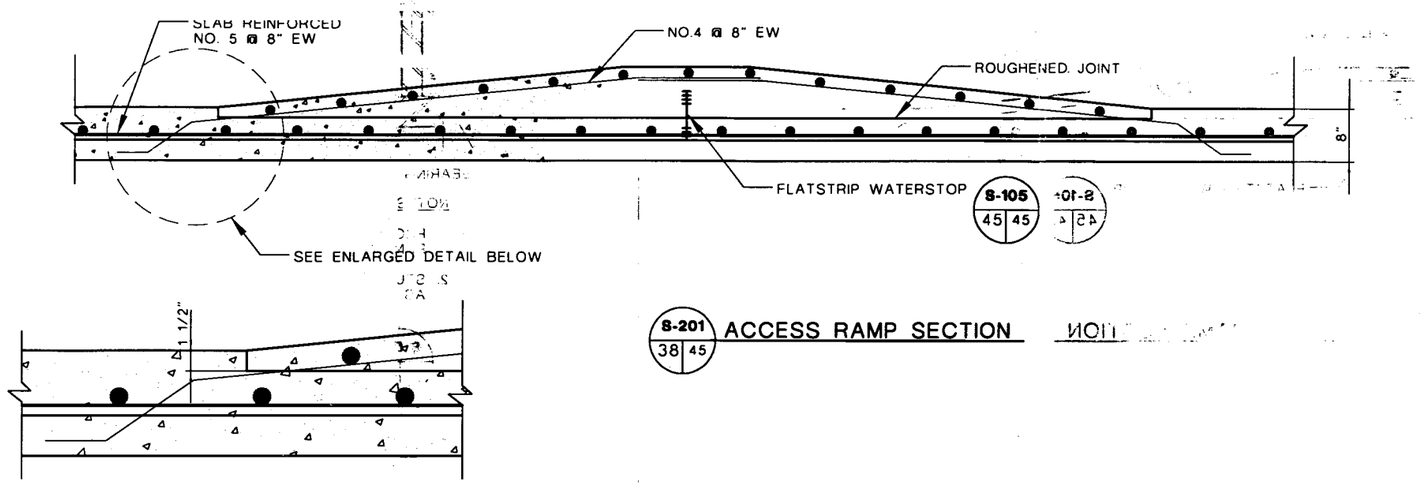

S-201 / 38 45 ACCESS RAMP SECTION

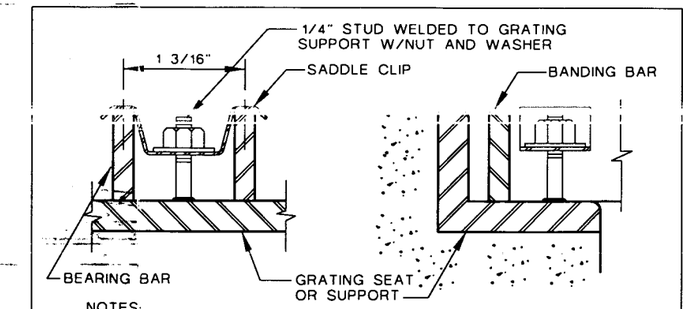

NOTES:

1. PROVIDE 4 CLIPS PER GRATING PANEL, APPROX 4" FROM PANEL CORNERS. MAXIMUM CLIP SPACING AT 36" OC
2. STUD, NUT, WASHER AND CLIP TO BE THE SAME MATERIAL AS THE GRATING EXCEPT FOR ALUMINUM USE SS

S-517 / - 45 GRATING ANCHOR DETAIL

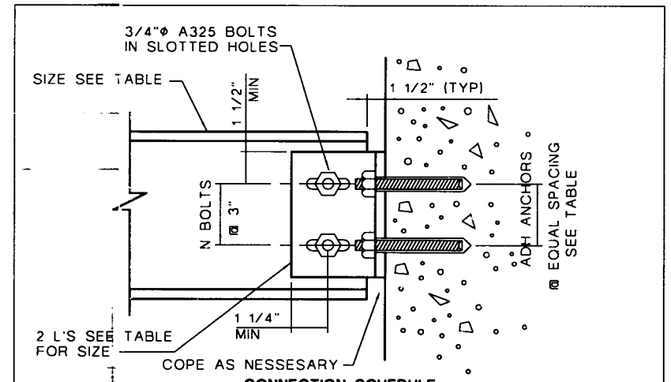

CONNECTION SCHEDULE

BEAM SIZE	ANGLE SIZE	NO. OF BOLTS (N)	ADHESIVE ANCHORS NUMBER AND SIZE
W6	3 1/2 x 3 1/2 x 3/8	2	2 - 3/4" Φ @ 6"

S-563 / - 45 BEAM TO CONCRETE CONNECTION

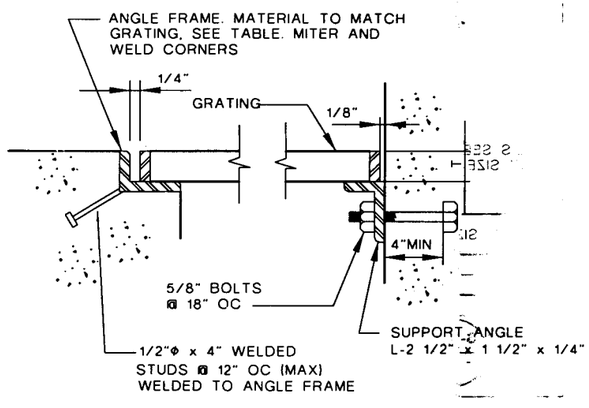

NOTES:

1. GRATING DEPTH TO BE DETERMINED BY MANUFACTURER AND APPROVED BY ENGINEER (UNO)
2. ALL ENDS AND OPENINGS SHALL BE BANDED
3. ALL GRATING SHALL BE SECURED IN PLACE WITH REMOVABLE FASTENERS, SEE DETAIL S-517
4. GRATING SHALL BE DESIGNED FOR A 5-TON FORKLIFT LOAD
5. BEARING BARS SHALL BE DEPTH T x 3/16" @ 1 3/16" OC CROSS BARS SHALL BE @ 4" OC

S-502 / - 45 GALVANIZED STEEL GRATING

USE STEEL ANGLE SUPPORTS AND BOLTS
GALVANIZE AFTER FABRICATION

GRATING FRAME TABLE

GRATING DEPTH T	FRAME ANGLE	GRATING DEPTH T	FRAME ANGLE
1"	1 3/4 x 1 1/4 x 1/4	2"	•2 1/2 x 2 1/2 x 1/2
1 1/4"	2 x 1 1/2 x 1/4	2 1/4"	2 1/2 x 2 1/2 x 1/4
1 1/2"	1 3/4 x 1 3/4 x 1/4	2 1/2"	3 x 2 1/2 x 1/2
1 3/4"	2 x 2 x 1/4		

• OR USE 2 1/2 x 2 1/2 x 1/4 WITH 1/4" SHIM PLATE WELDED TO BOTTOM

NOTE:
FOR GENERAL NOTES AND LEGEND INFORMATION SEE DRAWING No. 2, "INDEX, LEGEND AND GENERAL NOTES".

A / 6 6 — DETAIL/SECTION NUMBER; DRAWING No. WHERE DETAIL/SECTION IS REFERENCED; DRAWING No. WHERE DETAIL/SECTION IS SHOWN

PATRICK G. CORSER — NEW MEXICO — 12236 — REGISTERED PROFESSIONAL ENGINEER

PROFESSIONAL ENGINEER'S STATEMENT

I, Patrick G. Corser, state that this map was prepared under my supervision and all the information presented hereon is true and correct to the best of my knowledge and information.

11/5/98 — Patrick G. Corser, NM P.E. 12236
Date

REV No	REVISIONS	DATE	DESIGN BY	DRAWN BY	REVIEWED AND SIGNED BY
0	PART B PERMIT APPLICATION	12/12/97	PGC/JPP	JBEYER	P.CORSER

TRIASSIC PARK
WASTE DISPOSAL FACILITY

DRAWING TITLE:
CONCRETE AND GRATING DETAILS

TerraMatrix
MONTGOMERY WATSON
Mining Group

Sheet 5 Of 5 Sheets
SCALE: AS NOTED
DRAWING No. 45

AutoCAD FILE: CONC-D.DWG PROJECT NUMBER: 602-0200