02-018

FAX

MWH

1475 Pine Grove Rd, Suite 109
PO Box 774018
Steamboat Springs, Colorado 80477

Tel: 970 879 6260
Fax: 970 879 9048

To: Steve Pullen - NMED

Date: 25 Mar 02

From: Pat Corser - MWH

No. of Pages: 11 (including cover)

Fax No: ~~505-478-2567~~ 505-827-1545

Subject: Vadose Zone Monitoring

Steve,

Attached is an article on Vadose Zone Monitoring that I thought you would find interesting.

Regards,

Pat Corser

If you do not receive all pages, or if there are any problems with this transmission, please call 970-879-6260.

Copy

GROUND WATER AND VADOSE ZONE MONITORING

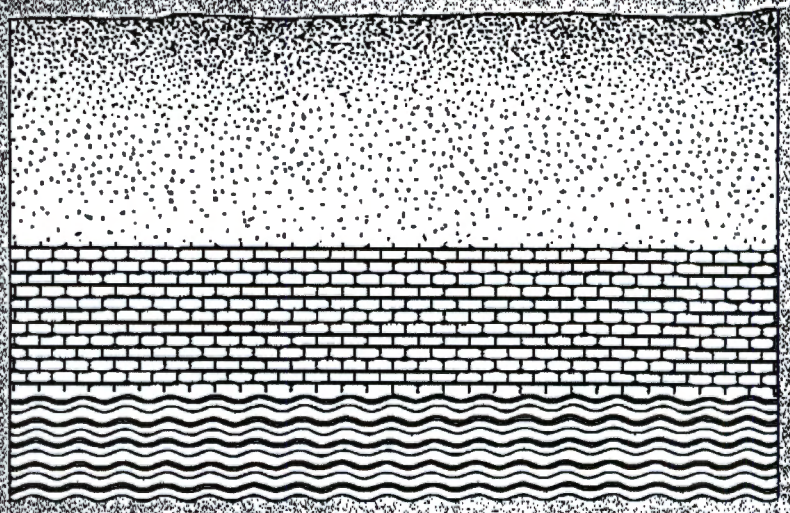

NIELSEN/JOHNSON, *editors*

ASTM STP 1053

- Data?
- Sampling vs non-sampling

L. G. Wilson[1]

Methods for Sampling Fluids in the Vadose Zone

REFERENCE: Wilson, L. G., "Methods for Sampling Fluids in the Vadose Zone," *Ground Water and Vadose Zone Monitoring, ASTM STP 1053*, D. M. Nielsen and A. I. Johnson, Eds., American Society for Testing and Materials, Philadelphia, 1990, pp.7–24.

ABSTRACT: This paper reviews available methods for sampling water-borne pollutants in the vadose zone. The "standard" method for sampling pore fluids in the vadose zone is core sampling of vadose zone solids, followed by extraction of pore fluids. The preferred method for solids sampling is the hollow-stem auger with core samplers. Core sampling does not lend itself to sampling the same location time and again. Membrane filter samplers and porous suction samplers are an alternative approach for sampling fluids in both saturated and unsaturated regions of the vadose zone. There are three basic porous suction sampler designs: (1) vacuum-operated suction samplers, (2) pressure-vacuum lysimeters, and (3) high-pressure-vacuum samplers.

Suction samplers are constructed mainly of ceramic and polytetrafluoroethylene (PTFE). The effective range of ceramic cups is 0 to 60 cbar of suction. The operating range of PTFE cups installed with silica flour is 0 to 7 cbar of suction. This paper reviews a method for extending the sampling range of suction samplers using an injection-recovery procedure. Factors affecting the operation of porous suction samplers include the physical properties of the vadose zone, hydraulic conditions, cup-wastewater interactions, and climatic conditions. Innovative procedures include the water extractor and the filter-tip system sampler. The free-drainage samplers include pans, blocks, and wick-type samplers. Techniques for sampling from perched ground-water zones include profile samplers, sampling from cascading wells, and sampling from dedicated wells.

KEY WORDS: ground water, vadose zone monitoring, soil core sampling, porous suction samplers, free-drainage samplers, perched ground-water sampling

Until recently, the major emphasis in monitoring programs at waste management sites was on ground-water sampling. This emphasis ignores the value of vadose zone monitoring techniques for the early detection of pollutant movement from a waste management unit. In regions with deep water tables, such as in the southwestern United States, the potential consequence of ignoring vadose zone monitoring is that the vadose zone and the ground-water system may become polluted before tangible evidence of leakage is evident in ground-water samples. Today, federal regulations for hazardous waste land treatment units (Subtitle C of the Resource Conservation and Recovery Act, Section 264.278 of 40 CFR, Part 264) mandate vadose zone monitoring. Some states (for example, California) also require vadose zone monitoring at waste management facilities.

Essentially vadose zone monitoring is a component of a comprehensive monitoring system at a given waste management facility. Such a system includes surface liquid and solids sampling, vadose zone monitoring, and ground-water monitoring. Similarly, there is a

suite of methods available for vadose zone monitoring systems. Everett, Wilson, and McMillion [1] reviewed the available methods for premonitoring and active vadose zone monitoring, including both sampling and nonsampling methods. Both sets of methods are required since nonsampling techniques establish movement of liquids in the vadose zone (such as during a leak from an impoundment) and sampling techniques obtain liquid samples for laboratory analysis. For example, evidence of water content changes by neutron logging in access wells triggers the need to sample from pore-liquid samplers. Morrison [2], Everett, Wilson, and Hoylman [3], Rhoades and Oster [4], and Gardner [5] discuss available nonsampling (indirect) techniques for vadose zone monitoring in detail.

The primary purpose of this paper is to review techniques for extracting liquids from the vadose zone. Sampling techniques are divided into three groups: solids sampling followed by extraction of pore liquids, unsaturated pore-liquid sampling, and saturated pore-liquid sampling.

Solids Sampling for Pore Liquid Extraction

Solids sampling, followed by laboratory extraction of pore liquids, is the standard method for characterizing pollutant distribution in the vadose zone. Solids sampling also provides useful geological information, such as the lithological characteristics of the vadose zone layers, and the water content distribution. Comprehensive references on solids sampling include a book by Hvorslev [6], the text by Driscoll [7], an Environmental Protection Agency guidance document for ground-water monitoring at RCRA sites [8], and reviews by Riggs [9], Everett and Wilson [10], and Hackett [11]. There are two broad categories of solids sampling methods: hand-operated samplers and power-operated sampling rigs.

Hand-Operated Samplers

Hand-operated samplers are basic sampling units developed by agriculturalists for determining soil texture, soil water content, soil fertility, and soil salinity. Common units include tube-type samplers and auger samplers.

The Veihmeyer or King tube is a commonly used tube sampler for obtaining a long continuous sample near the land surface (see Fig. 1). This sampler consists of a hardened cutting point and head, threaded into a body tube. The upper end of the body is connected to a head containing two opposing, protruding lugs. A drop hammer is provided. The operation of the sampler is illustrated in Fig. 1. Gentle tapping on the head removes the sample. These samplers are commercially available in lengths from 1.22 m (4 ft) to 1.83 m (6 ft) [12]. The inside diameter of commercially available samplers is 1.9 cm (¾ in.).

Other commercial tube-type samplers are available for obtaining larger, 8.9-cm (3½-in.)-diameter, continuous soil cores [12]. Brass retaining cylinders, slipped into the sampler barrel, provide undisturbed samples for extraction of pore liquids. Samples are extracted from inside the drive barrel by means of a pusher rod.

Chong, Khan, and Green [13] described a soil core sampler for obtaining shallow samples using a hand-operated two-ton jack. Sharma and De Datta [14] reported a core sampler for obtaining undisturbed samples from the upper 10.2 cm (4 in.) of puddled soils.

Another common hand augering tool is the bucket auger. The basic components of bucket augers are shown on Fig. 2. Types of bucket augers include the common posthole auger, ditch augers, and regular or general purpose barrel augers [10]. Variations of the general purpose auger include sand and mud augers. These samplers are best suited for sampling shallow soil depths. However, using a tripod and pulley allows sampling to depths up to 24.4 m (80 ft) in some types of materials.

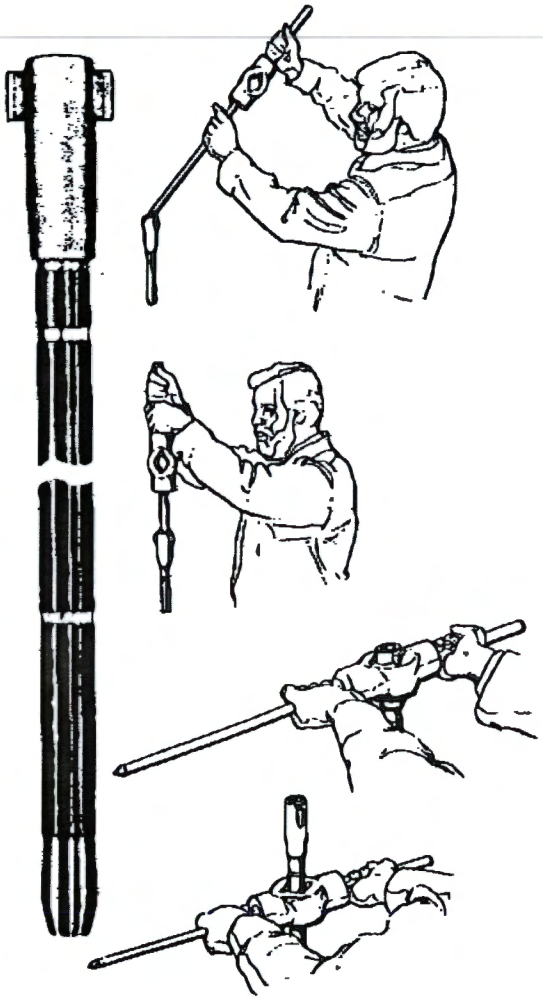

FIG. 1—*Tube-type sampler, showing the operational procedure* [12].

Power-Operated Sampling Rigs

Power-operated samplers are identical to the units used to sample below water tables. However, commonly used drill rigs, such as cable tool and rotary units, are not recommended because they generally require drilling fluid. Air drilling is undesirable when attempting to obtain pore liquids at field moisture content. Two suitable power-driven techniques are bucket augers and flight-type auger drill rigs.

Bucket augers are large-diameter, that is, 1.83-m (6-ft)-diameter cylindrical buckets with auger-type cutting blades on the bottom [7]. In practice, the bucket is rotated with depth in the vadose zone until the bucket is full. Sampling consists of extracting small-diameter core samples from the interior of the bucket after the full bucket is lowered to the ground.

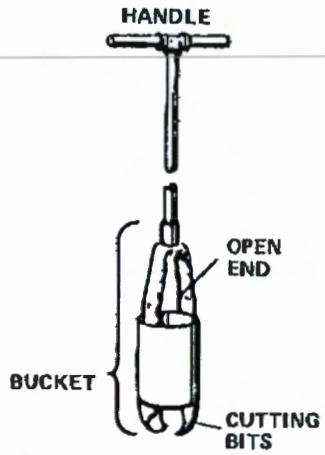

FIG. 2—*Bucket-type hand auger* [12].

This approach minimizes problems with cross-contamination of samples. Bucket augers are best suited for sampling from relatively stable formations. Common sampling depths are between 15.25 m (50 ft) and 45.75 m (150 ft) [7].

Solid and hollow-stem augers are also used for sampling. The most basic, power-driven flight auger is driven by a small air-cooled engine. Handles attached to the head assembly allow two operators to guide the continuous-flight auger into the soil. Additional flights are added as required. Samples are brought to the surface by the screw action of the auger.

Larger solid-stem augers are mounted on drill rigs. Attached to the lowermost, or leading, flight of augers is a cutter head, about 5 cm (2 in.) larger in diameter than the flights [7]. Auger diameters are available up to 61 cm (24 in.). Flight lengths are generally 1.52 m (5 ft). Typical drilling depths range from 15.25 m (50 ft) to 36.6 m (120 ft), depending on the texture of the vadose zone sediments [7].

The favored method for sampling in unconsolidated material is the hollow-stem, continuous-flight auger (see Fig. 3). This design simultaneously rotates and axially advances a hollow-stem auger column. The auger head contains replaceable carbide teeth that pulverize the formation deposits during rotation of the flight column. The solid flight column serves as a temporary casing while relatively undisturbed samples are obtained from within the hollow stem [7]. Recently, Hackett [11] published an excellent state-of-the-art review of this technique.

According to the U.S. Environmental Protection Agency (EPA) [8], wells with diameters up to 10.2 cm (4 in.) have been constructed with hollow-stem augers. In addition, attempts are under way to construct augers with inside diameters of about 25.4 cm (10 in.). The cutting diameter is somewhat greater than the flighting diameter because of the protruding carbide teeth. Individual flights are generally 1.52 m (5 ft) in length, although auger flights up to 3.05 m (10 ft) in length are available. The total completion depth is about 45.75 m (150 ft). Water is not added to the hole during augering to avoid diluting and contaminating pore fluids.

Tubular samplers provide "undisturbed" vadose zone sediments from inside a hollow-stem auger (see Fig. 3). Three popular tubular samplers are ring-lined barrel samplers, split tube samplers, and thin-wall "Shelby tube" samplers. These samplers are commercially available in a variety of diameters. Brass cylindrical rings inserted inside a barrel sampler

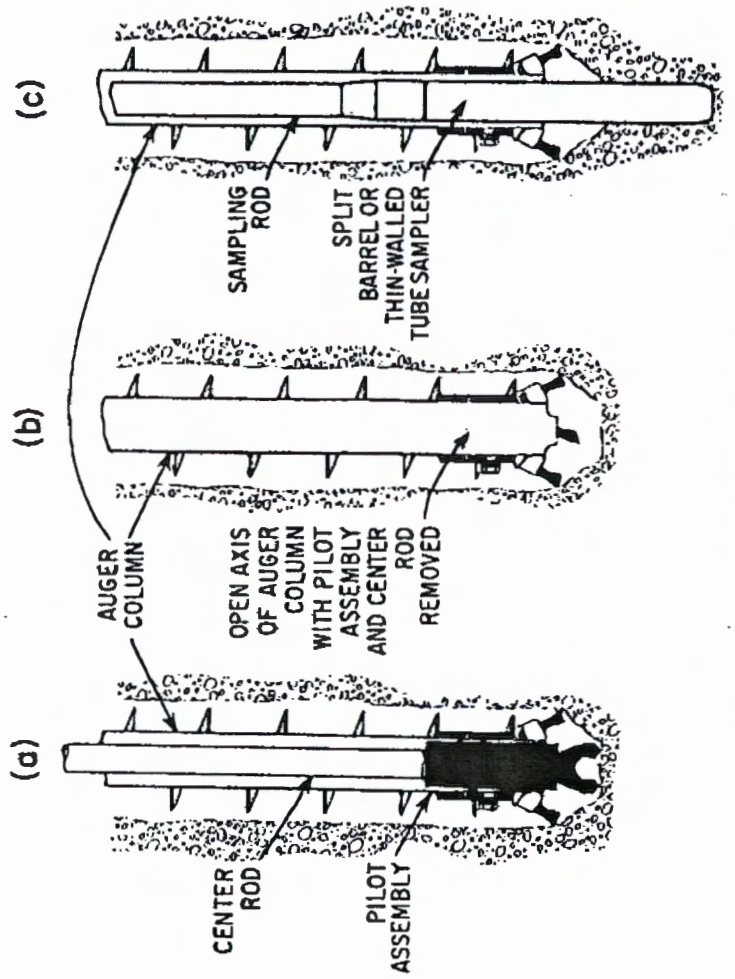

FIG. 3—*Hollow-stem auger, showing the method of sampling with sampling tubes* [11].

protect the samples during shipment to a laboratory. After retrieving the sampler, the sampling technician forces the cylinders out of the sampler, separates the cylinders with a spatula, covers the ends with Teflon sheets and rubber caps, and seals the caps onto the cylinders with electrician's tape. This technique is particularly important for reducing loss of volatile organics in the samples.

According to Hackett [*11*], continuous-sampling tube samplers are available to permit sampling as the auger column is rotated and axially advanced. Barrel samplers of 1.53 m (5 ft) are used. The sampler does not rotate with the augers [*11*]. According to Riggs [*9*], this system overcomes difficulties in sample recovery experienced with standard techniques. The auger teeth and flight continuously relieve overburden stresses and break the vacuum at the base of the sample at the end of sampling [*9*]. For additional information on samplers see Hvorslev [*6*], Riggs [*9*], Hackett [*11*], and Fenn et al. [*15*].

Advantages and Disadvantages of Solids Sampling

Solids sampling for extraction of pore fluids is valuable for characterizing depth-related changes in the composition of pore fluids. A major disadvantage is that core sampling is basically a destructive technique because additional samples cannot be obtained from the same location. This precludes taking samples from the same location at later times for determining trends. Also, as with all techniques for sampling pore liquids, extrapolating data from a single sampling hole to wider areas is risky because of the natural spatial variability of vadose zone hydraulic properties.

Cross contamination is an inherent danger when sampling with solid-flight and hollow-stem augers [*11*]. Contaminated solids are transported on the auger flights both upward and downward in the hole. This problem is largely circumvented when sampling by drive tube through a hollow-stem auger by discarding the uppermost cylinder. The sample in this cylinder contains solids originally at the base of the hole, possibly including sediment brought down during drilling.

Downward leakage of contaminated, perched ground water may occur through the borehole during drilling. Thus, if the principal water table is shallow, contaminants may be short-circuited to the water table.

Pore-Liquid Sampling from Unsaturated Regions of the Vadose Zone

Pore liquid samples cannot be obtained from open cavities in unsaturated regions of the vadose zone because the fluid is held at negative matric potentials. Thus, wells or sampling pans cannot be used to obtain liquid samples under these conditions. Methods for sampling under unsaturated conditions include cellulose-acetate hollow fibers, membrane filter samplers, and suction samplers, also called suction lysimeters. These units have an advantage over solids sampling in allowing sequential sampling from fixed locations in the vadose zone.

Jackson, Brinkley, and Bondietti [*16*], and Morrison [*17*] described the cellulose-acetate hollow-fiber sampler. These semipermeable fibers function as molecular sieves for the dialysis of aqueous solutions. Advantages that have been claimed for these samplers include flexibility, small diameter, minimal chemical interaction of solute with the tube matrix, and sample compositions similar to those obtained using ceramic cups [*4*]. So far these samplers are more suitable for laboratory studies than for field sampling.

Stevenson [*18*] presented the design of a suction sampler using a membrane filter mounted in a "Swinnex"-type filter holder (see Fig. 4). These filters are composed of polycarbonate or cellulose-acetate. The collector system draws vadose zone fluid by capillarity. The collected fluid then flows in the collector sheets toward the glass fiber wicks as a result of suction applied to the filter holder assembly [*10*]. The "wick and collector" assembly has a relatively large contact area with vadose zone sediments. A flexible tube, attached to the filter holder, permits applying a negative pressure to the system when delivering collected liquid to a sample bottle. So far extensive use of this technique has not been reported in the literature.

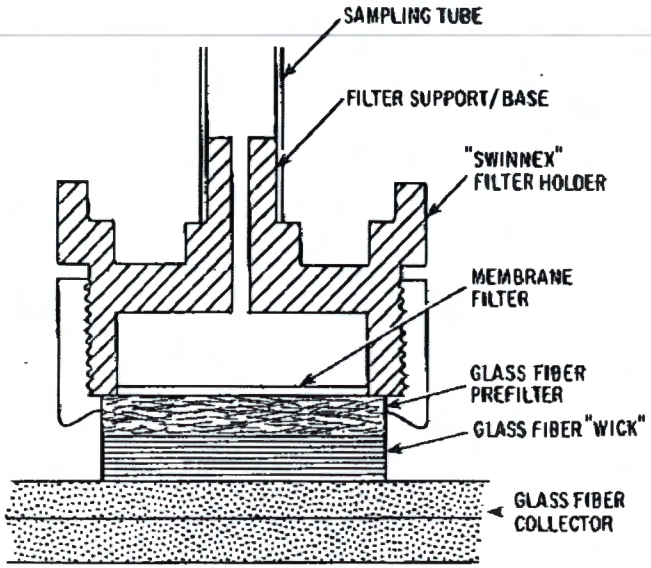

FIG. 4—*"Swinnex"-type pore fluid sampler* [16].

Porous Suction Samplers

Suction samplers (also called soil lysimeters) are the favored method for sampling pore fluids under suction in the vadose zone. Basically, these samplers comprise a porous cup mounted on the end of a hollow tube [generally of polyvinyl chloride (PVC)]. An alternative design incorporates a cylindrical porous section within the tubing rather than at the end of the tubing [*2*]. When placed into the vadose zone, the pores (and fluid) in the porous sampler form a continuum with the pores (and fluid) in the surrounding medium. The surrounding medium consists of either native material or silica flour. The porous samplers are made from various materials, including ceramic, Alundum, polytetrafluoroethylene (PTFE), and nylon [*2,19*]. Ceramic and Alundum cups are hydrophilic, whereas PTFE cups are hydrophobic [*19*].

There are three basic types of suction cup samplers: (1) the vacuum-operated sampler, (2) the pressure-vacuum-operated sampler, and (3) the pressure-vacuum sampler with check valves. Vacuum-operated samplers consist of a suction cup mounted on a body tube that projects slightly out of the soil surface. A negative air pressure, applied to the interior of the sampler through a small-diameter tube, draws pore fluid into the cup for delivery to a sample bottle at the land surface. The practical depth limitation on these samplers is about 7.62 m (25 ft). However, because of the expense of using long body tubes, these units are not generally used for depths greater than 1.83 m (6 ft).

Parizek and Lane [20] designed vacuum-pressure samplers for sampling at depths beyond the suction limit of vacuum samplers. As shown on Fig. 5, these samplers include a ceramic cup mounted on a body tube, a sample delivery line, and a pressure-vacuum line. When sampling, a negative pressure is applied to the inside of the sampler, drawing pore fluids into the cup. Subsequent application of pressure through the vacuum-pressure line forces the collected fluids through the discharge line to sample bottles. These samplers function most effectively at depths above 15.25 m (50 ft). Experience has shown that below 15.25 m (50 ft) application of pressure forces part of the collected sample out of the cup.

Pressure-vacuum samplers with check valves, designed by Wood [21], are used for sampling depths greater than 15.25 m (50 ft). Figure 6 shows the components of this unit. The

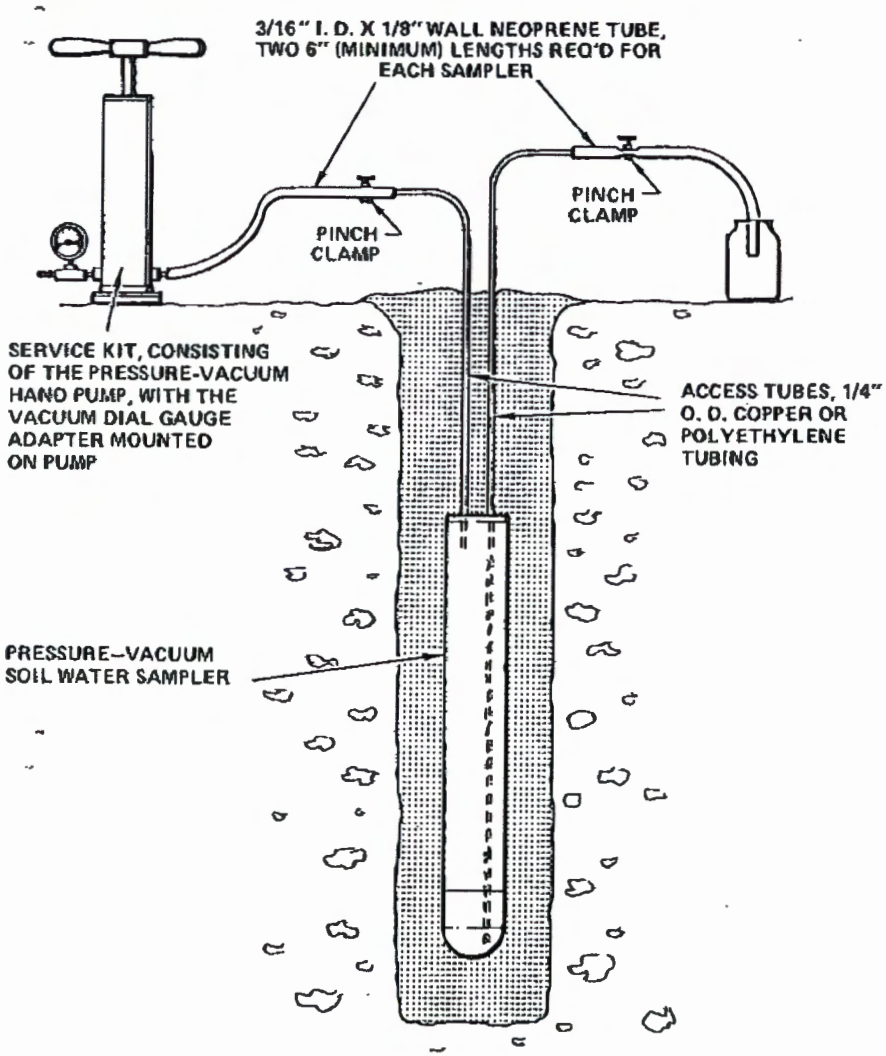

FIG. 5—*Vacuum-pressure suction cup sampler* [22].

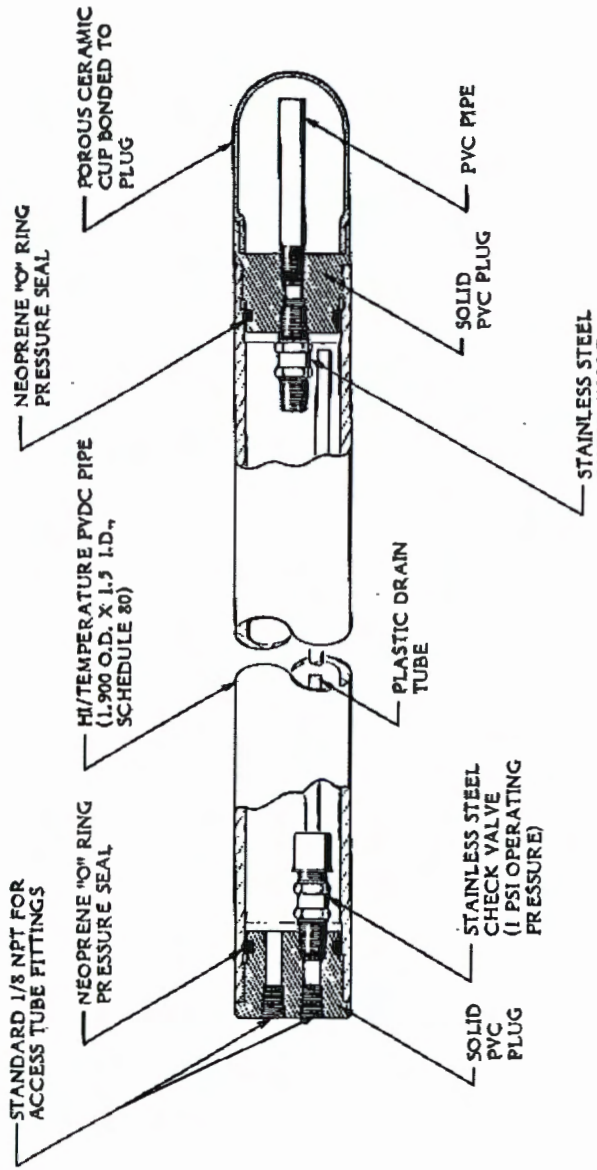

FIG. 6—*High-pressure/vacuum suction cup sampler* [22].

sampler consists of a lower and an upper chamber. The upper chamber has a capacity of about 1 L. The lower chamber includes the suction cup. A sample tube, containing a stainless steel check valve, connects the lower and upper chambers. The sample delivery tube also contains a stainless steel check valve.

Applying a vacuum opens the one-way check valve to the lower chamber, drawing in pore liquid through the cup. The vacuum also shuts the valve in the discharge line and forces the collected fluid from the lower chamber into the upper chamber. Subsequently, the vacuum is released and a pressure of nitrogen gas is applied. This shuts the lower valve, opens the upper valve, and forces the sample through the delivery line to the surface. High pressures do not damage the cup or cause backflow of the sample from the cup. These units sample from depths as low as 91.5 m (300 ft) below the land surface [*22*].

Preparation of the ceramic cups involves leaching several pore volumes of acid (for example, 1 *N* HCl) through the cups, followed by flushing with deionized water. This process reduces the concentrations of major cations and trace elements released from the cup during sampling [*19*]. Care is required when installing a sample line into the base of a sampling cup to avoid having the tubing catch on the inside lip of the cup (see Fig. 7). Figure 7 shows that bevelling the end of the tube reduces this problem [*23*].

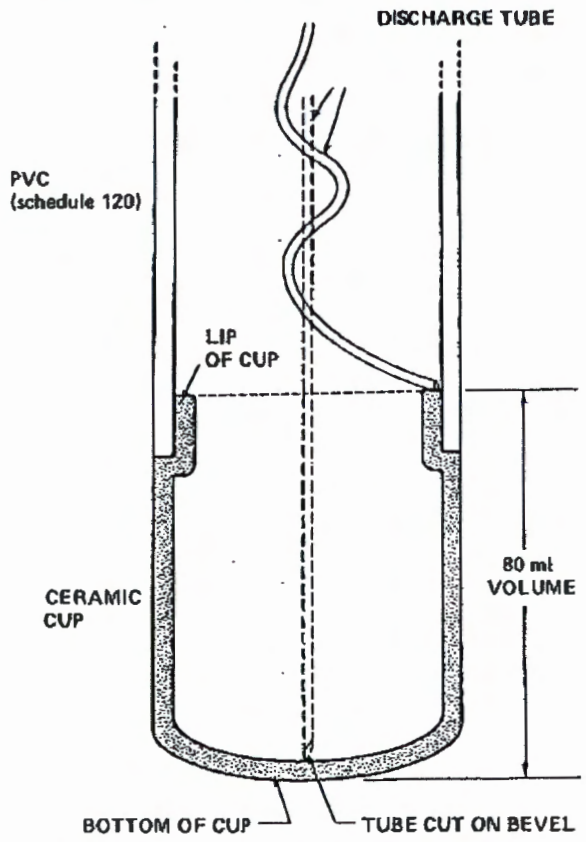

FIG. 7—*Creation of dead space in suction samplers* [10].

Installating suction samplers includes constructing a borehole to the depth of interest, pouring in a slurry of silica flour (454 g (1 lb) of 200-mesh silica flour per 150 mL of water [*23*]), using a tremie, to cover the sampler and 0.6 m (2 ft) or 0.915 m (3 ft) of the borehole, then backfilling with bentonite. Technicians adjust the pressure-vacuum in the system using a hand pump.

Round-bottom sampling cups are commercially available in a number of sizes and air-entry values [*24*]. Body lengths are available up to 25.4 cm (10 in.), and even longer upon request. Greater lengths may be desirable for units installed in fractured media to increase the opportunity for contacting fractures.

Operational Features of Porous Suction Samplers

Table 1 summarizes the operational features and constraints of suction cup samplers.

Factors affecting the operation of suction cup samplers include the air-entry, or bubbling, pressure of the cups; the effective operating range of the cups; the physical conditions of the soil, including hydraulic factors; cup-fluid interactions; and climatic factors [*3,23*]. Everett and McMillion [*23*] obtained laboratory data on air entry pressures ("bubbling pressures") for ceramic and PTFE cups (see Table 1). Air entry pressures are related to the pore size relationships of the cups. Table 1 summarizes pore size relationships for these cups.

The most critical operational feature of the porous cup is the range of negative pore pressures for effective sampling. Generally, "effective sampling" can be thought of in terms of sampling times and sample volume. Basically, as the suction increases in the medium being sampled, the unsaturated hydraulic conductivity of the medium becomes so low that the rates of delivery become vanishingly small. This occurs even though the air entry value of the sampler has not been exceeded. Table 1 summarizes the effective sampling ranges for ceramic and PTFE samplers.

Amter [*25*] evaluated the injection/recovery technique for extracting fluids from the vicinity of suction samplers beyond the normal operating range. His technique involves injecting deionized water through the cup into the surrounding medium and subsequently drawing the mixture of injected water and native fluid back into the cup. Because of dilution, the method is best suited when looking for target chemicals. The technique can be used with vacuum-type samplers and pressure-vacuum samplers.

The likelihood that suction cups will operate in the wet range is enhanced by terminating units near the interface between layers of differing texture. Information on layered conditions is obtained during solids sampling. For example, Fig. 8 shows a textural and water content profile from a sampling hole near a dry well in Tucson, Arizona. Three regions of high water content are present in fine-grained sediments. Suction samplers should be located above the contacts between the coarse and fine sediments.

Another important operational feature of suction cup samplers is loss of vacuum. Everett and McMillion [*23*] found that ceramic samplers were able to maintain a high vacuum (about 93 cbar) for 20 days of laboratory testing. The vacuum dropped off in all PTFE units, which must be embedded in silica flour to minimize vacuum loss. The joints in the units with screw fittings must be sealed.

Effect of the Soil Physical Properties on the Operation of Porous Suction Samplers

The use of suction samplers to obtain pore-liquid samples for determining a "representative" water chemistry in a relatively unstructured soil has been questioned [*3,4,26–29*].

TABLE 1—*Operational features and constraints with suction samplers.*

PORE SIZE	OPERATING RANGE	AIR ENTRY
1. Low-flow ceramic samplers: 1.04 microns	1. Ceramic samplers: 0 to 60 centibars	1. Low flow ceramic samplers: 233 centibars
2. High flow ceramic samplers: 2.8 microns	2. PTFE samplers packed in silica sand: 0 to 20 centibars	2. High flow ceramic samplers: 100 centibars
3. PTFE cups vary from 14 to 300 microns		3. PTFE cups: 20 centibars

SOIL PHYSICAL PROPERTIES	HYDRAULIC PROPERTIES	CUP-FLUID INTERACTIONS
1. Maintaining contact between cups and pores is difficult in coarse-textured or fractured materials. Solution: place cups in silica sand.	1. The hydraulic properties of the sphere sampled by a cup vary. Thus, point samplers provide only an indication of relative and not absolute changes in pore liquid composition. Solution: use samplers to detect arrival of pollutants but not absolute concentrations.	1. Clogging by particulates does not appear to be a problem. Precipitation of chemical compounds in pores is possible in reducing environments.
2. The composition of pore liquid from sequences of large pores and cracks differs from the composition of liquid from micropores.	2. A two-domain flow system exists in structured and fractured media; gravity flow occurs in cracks; unsaturated flow occurs inside blocks. Solution: use free-drainage samplers to sample from blocks. Alternative: long cups embedded in silica sand will enhance sampling from cracks.	2. Suction cups filter out bacteria but not viruses.
		3. Sorption or repulsion of molecules by ceramic cup samplers may change the concentrations of negatively charged contaminants present in low concentrations. The problem is accentuated by long sampling times.
		4. Ceramic, alundum, and PTFE cups release some trace elements and metals to solution flowing through cups. A problem only if concentrations in pore fluids are low.

CLIMATIC FACTORS
1. In frozen soils the tension of unfrozen water may prohibit flow into a cup.
2. Water films in extraction line may freeze. Solution: install a bleed valve in the extraction line.

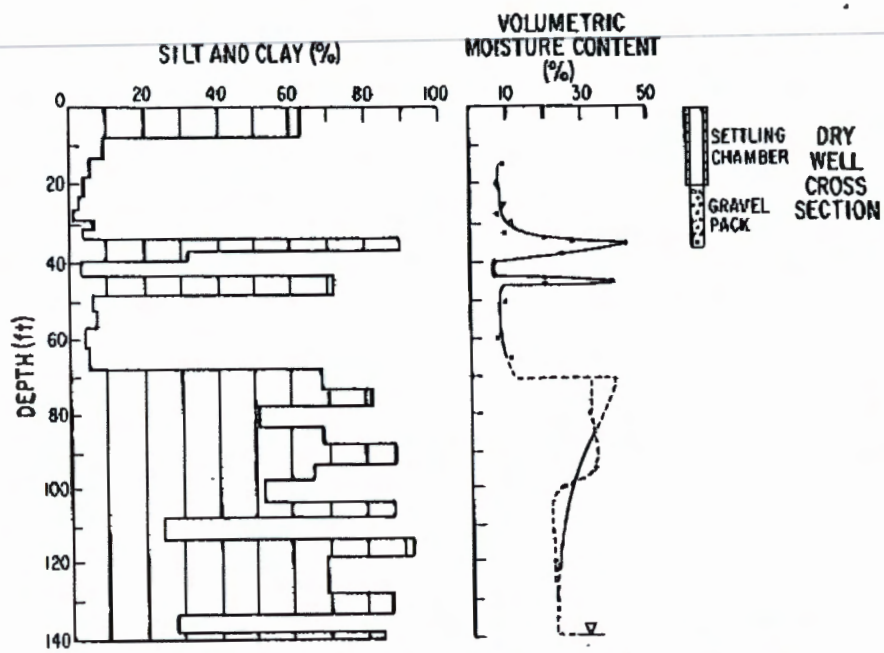

FIG. 8—*Geological and water-content profiles near a dry well in Tucson, Arizona.*

As pointed out by England [26], the composition and concentration of pore liquid is not homogeneous throughout a given mass. Accordingly, pore liquid extracted from sequences of large pores at low suction may have a composition that is quite different from that extracted from sequences of micropores. Moreover, "a point source of suction, such as the porous cup, samples roughly a sphere, draining different-sized pores as functions of distance from the point, the amount of applied suction, the hydraulic conductivity of the medium, and the soil-water content" [26]. The concentrations of various ions in solution do not as a general rule vary inversely with the soil solution [26].

Variability of hydraulic properties within the sampling sphere also affects sampling. Accordingly, "point samples" only provide an indication of relative changes in pore liquid composition but not absolute concentrations, unless the spatial variability of the vadose zone properties are quantified [4]. Thus, suction samplers are best suited for detecting the arrival of pollutants at the sampling depth and not the absolute amounts or concentrations.

Structured and fractured media accentuate the problems described in the last two paragraphs [28]. In such media, liquid movement occurs in a two-domain system [29]. One domain consists of the porous matrix. The conventional, Darcian-based unsaturated flow equation describes flow in this domain. The second domain includes a system of fractures or macropores through which water flows by gravity [29]. Free-drainage samplers are best suited for sampling saturated drainage in the larger cracks and macropores [27]. Suction samplers are best suited for sampling from the unsaturated flow regime within the blocks. The opportunity for suction samplers to extract liquid from fractures and macropores may be enhanced by embedding sampling units in sections of silica sand.

Cup-Fluid Interactions

There are two classes of interactions: (1) those affecting the operation of cups by plugging and (2) those affecting the composition of liquids flowing through the cups. Clogging by particulate matter does not appear to be a problem [*30*]. Formation of chemical precipitates within the cup pore space is always a possibility, for example, in the reducing environments of perched ground water.

Suction cups appear to be very effective in filtering out bacteria. During laboratory studies, Dazzo and Rothwell [*31*] observed a 100-fold to 10 000 000-fold reduction in fecal coliform in manure slurry during sampling, and 65% of the cups yielded coliform-free samples. They concluded that suction samplers do not yield valid water samples for fecal coliform analysis. In contrast, suction samplers are effective in sampling for viruses.

Anderson [*28*] found that low concentrations of negatively charged contaminants present in the soil solution may be changed during sampling because of sorption or repulsion of molecules in ceramic cup samplers. The long time delay required to obtain sufficient sample for laboratory analyses in slowly permeable sediments may also alter the chemical composition. Similarly, reducing conditions within a cup may alter the concentration of metals in a sample [*28*]. During studies at a tannery disposal site, Anderson [*28*] found that chromium precipitated in the samplers because of changes in redox conditions between the soil and sampler. She estimates that the quantity precipitated was equivalent to 4 to 40 times the measured dissolved concentrations.

Climatic Factors

Climatic conditions may affect the operation of suction samplers (see Table 1). For example, in frozen soils the tension of unfrozen water may be great enough to limit flow into the cups [*3*]. Water films in the extraction line may freeze [*17*]. This problem may be eliminated by installing a bleeder valve along the extraction line [*17*].

Alternative Suction Sampler Designs

According to Baier, Aljibury, and Meyer [*32*], tensiometer units, used to determine water potentials in the vadose zone, may be converted to vacuum-pressure samplers by draining the tensiometer fluid during a sampling cycle. This is possible because tensiometer cups are also made of ceramics. Baier, Aljibury, and Meyer [*32*] used this approach to sample the vadose zone beneath sewage sludge ponds at Sacramento, California. When interpreting the results, care is required to account for the presence of residual tensiometer fluid in the collected sample.

Nightingale, Harrison, and Salo [*33*] described a subsurface water extractor that can be used under both saturated and unsaturated conditions, for example, in the vicinity of fluctuating water tables. Figure 9 shows the basic design of their sampler. The interior of the body tube serves as a sample reservoir. Applying a vacuum to the vacuum-pressure line draws the sample up the standpipe into the reservoir. The sample remains in the reservoir when the vacuum is removed. Pressurizing the pressure-vacuum line with nitrogen gas forces the sample through the outlet line into the sample bottle. The backflow of sample through the ceramic cup is minimal. The maximum sampling depth is estimated to be 28 m (91.8 ft). The reservoir capacity is from 1.5 to 2.0 L.

Haldorsen, Petsonk, and Tortstensson [*34*] reported on the filter-tip sampler system for obtaining samples from both saturated and unsaturated regions of the vadose zone. The system includes a downhole filter tip connected to an access tube, and aboveground adap-

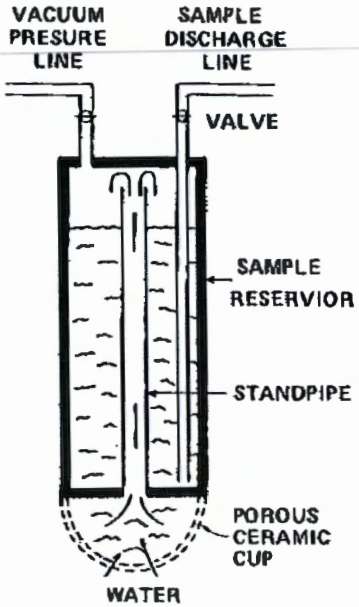

FIG. 9—*Alternative suction sampler design* [33].

tors. The hollow filter tip consists of a porous filter section above a pointed drive point, a threaded section to be attached to the access pipe, and an upper, necked-down section containing a rubber septum. The pore size of the filtered section is about the same as that for the suction samplers, approximately 3 μm. This ensures that the porous segment remains saturated even though the suction in the surrounding medium increases [*34*].

The first phase of sampling with the filter-tip sampler system involves lowering a sampling adaptor into the access hole to make contact with the filter tip. The adaptor incorporates an air-evacuated sampling vial with a rubber septum and a sliding section with a concentric, double-ended hypodermic needle. The second phase involves forcing the hypodermic needle through the rubber septums into the filter tip and sampling vial, causing fluid, drawn through the porous section by vacuum, to fill the sample vial.

Pore-Liquid Sampling from Saturated Regions of the Vadose Zone

Two classes of saturation develop in an otherwise unsaturated vadose zone: (1) free-drainage water, and (2) perched ground water. Free drainage occurs when fluid applied at the land surface flows downward in a profile under saturated or near-saturated conditions through macropores and through fractures and cracks. Perched ground water develops at the interface between vadose zone layers of differing texture, for example, in a gravel layer overlying a clay lens.

Free-Drainage Samplers

Free-drainage samplers intercept and collect water flowing in saturated pores or fractures for delivery to a sample container. Everett and Wilson [*10*], Hornby, Zabcik, and Crawley

[27], and Barbee [35] reviewed alternative designs for free-drainage samplers, including stainless steel troughs, sand-filled funnels, and hollow glass blocks. In each case, gravity drainage creates a slightly positive pressure at the soil-sampler interface causing fluid to drip into the sampler. Shaffer, Fritten, and Baker [36] designed a 20-cm (7.9-in.)-pan lysimeter with a tension plate capable of pulling a six-centibar suction.

Recently, Hornby, Zabcik, and Crawley [27] presented the design of a wicking-type sampler (see Fig. 10).

Typically, free-drainage samplers are installed in tunnels, extending from trenches or buried culverts [2,37], constructed to the total desired sampling depth. The total depth of sampling is limited only by the availability of construction equipment. Similarly, the horizontal extent of the samplers depends on the availability of tunneling equipment. Hornby, Zabcik, and Crawley [27] described a barrel lysimeter comprising an encased soil monolith of undisturbed soil. Above the sealed base of the monolith is a system of porous ceramic cups. The monolith is placed in a tight-fitting hole beneath a monitoring site (for example, in the treatment zone beneath the zone of incorporation of a land treatment unit). The lysimeters collect fluid draining through the monolith.

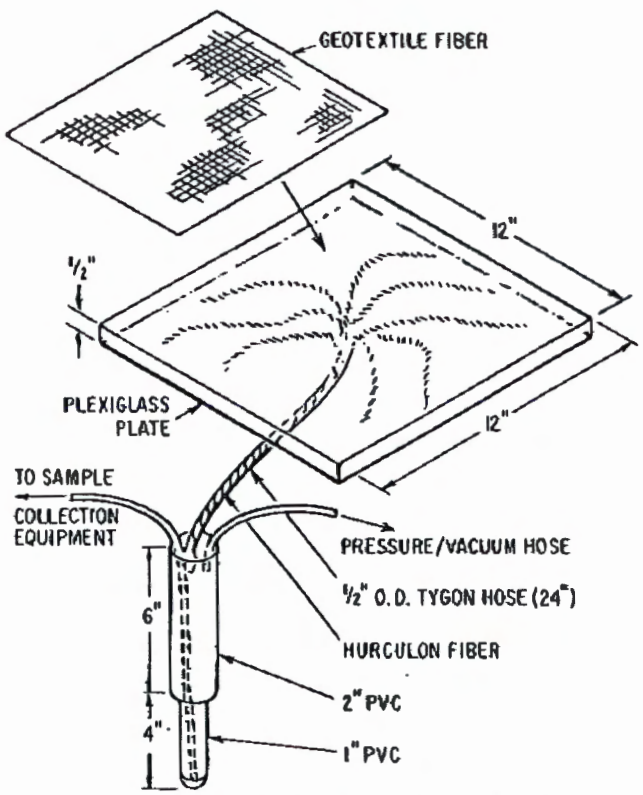

FIG. 10—*Wicking-type free-drainage sampler* [27].

Sampling from Perched Ground Water

The presence of perched ground-water regions in the vadose zone provides the opportunity to obtain larger volumes of fluid for analysis than is possible with core samples and suction samplers. There are three basic sampling alternatives: (1) sampling tile drainage, (2) sampling cascading water, and (3) sampling from wells.

In agricultural areas with high water tables, a common practice is to install buried tile lines to maintain water table levels below the rooting depths of crops. Samples of drain water are accessible at the point of discharge of a tile line into an open ditch. The samples may or may not be representative of the "average" conditions, depending on the distribution of soil mapping units in the drained area.

Piezometers or multilevel samplers collect samples from shallow perched ground-water regions. Pickens et al. [38] described a mulitlevel sampler suitable for sampling in cohesionless soils in which flow is predominantly in the horizontal direction.

Wilson and Schmidt [39] described techniques for sampling from cascading wells. Cascading water occurs through cracks in casing joints and through dewatered perforations. Cascading water samples are obtained from abandoned wells near the site being monitored or from operating wells after the removal of pumps for servicing. A bucket lowered into the cascading stream collects the water samples. Alternatively, water is collected at the wellheads during the start-ups of wells that have been shut down for a prolonged period.

Dedicated wells provide perched ground-water samples from deeper regions of the vadose zone. The construction techniques and well designs are identical to those used for ground-water monitoring wells [8]. A problem in some areas is that perched ground-water systems tend to be ephemeral [39]. Backup systems, for example, suction samplers and the extractor design by Nightingale, Harrison, and Salo [33], are recommended for these conditions.

References

[1] Everett, L. G., Wilson, L. G., and McMillion, L. G., *Ground Water*, Vol. 20, No. 3, May–June 1982, pp. 312–324.

[2] Morrison, R. D., *Ground Water Monitoring Technology*, Timco Mfg., Inc., Prairie DuSac, WI, 1983.

[3] Everett, L. G., Wilson, L. G., and Hoylman, E. W., "Vadose Zone Monitoring for Hazardous Waste Sites," Noyes Data Corp., Park Ridge, NJ, 1984.

[4] Rhoades, J. D. and Oster, J. D. in *Methods of Soil Analysis*, Part I, *Physical and Mineralogical Methods*, 2nd ed., A. Klute, Ed., American Society of Agronomy, Madison, WI, 1986, pp. 985–1006.

[5] Gardner, W. H., in *Methods of Soil Analysis*, Part I, *Physical and Mineralogical Methods*, 2nd ed., A. Klute, Ed., American Society of Agronomy, Madison, WI, 1986, pp. 493–544.

[6] Hvorslev, M. J., *Subsurface Exploration and Sampling of Soils for Civil Engineering Purposes*, U.S. Army Corps of Engineers Waterways Experimental Station, Vicksburg, MS, 1949.

[7] Driscoll, F. G., *Groundwater and Wells*, 2nd ed., Johnson Division, St. Paul, MN, 1986.

[8] "RCRA Ground-Water Monitoring Technical Enforcement Guidance Manual," U.S. Environmental Protection Agency, Washington, DC, 1986.

[9] Riggs, C. O. in *Proceedings*, Conference on Characterization and Monitoring of the Vadose (Unsaturated) Zone, Las Vegas, NV, 8–10 Dec. 1983, National Water Well Association, Worthington, OH, pp. 611–622.

[10] Everett, L. G. and Wilson, L. G., "Permit Guidance Manual on Unsaturated Zone Monitoring for Hazardous Waste Land Treatment Units," EPA/530-SW-86-040, U.S. Environmental Protection Agency, Environmental Monitoring Systems Laboratory, Las Vegas, NV, 1986.

[11] Hackett, G., *Ground Water Monitoring Review*, Vol. 7, No. 4, 1987, pp. 51–62.

[12] "Soil Sampling Tubes," Product Bulletin A23, Soilmoisture Equipment Corp., Santa Barbara, CA, 1981.

03-27-02 09:48 MONTGOMERY WATSON HARZA ID=9708799048 P11/11